NESE 811
4 JANUARY 1985

AAF

U.S. ARMY ENGINEER DISTRICT, ALBUQUERQUE CORPS OF ENGINEERS
CERTIFIED FOR APPROVAL AS INDICATED BELOW

A - APPROVED AS SUBMITTED
B - APPROVED, EXCEPT AS NOTED ON DRAWINGS AND/OR ATTACHED SHEET(S). RESUBMISSION NOT REQUIRED.
C - APPROVED EXCEPT AS NOTED ON DRAWINGS. REFER TO ATTACHED SHEET. RESUBMISSON REQUIRED.
D - WILL BE RETURNED BY SEPARATE CORRESPONDENCE
E - DISAPPROVED. SEE COMMENTS ON ATTACHED SHEET.
F - RECEIPT ACKNOWLEDGED.
G - OTHER (SPECIFY)

NOTE: ITEMS APPROVED AS TO GENERAL LAYOUT ONLY. DIMENSIONS AND QUANTITIES NOT CHECKED. APPROVAL DOES NOT RELIEVE CONTRACTOR OF RESPONSIBILITY FOR ANY ERRORS WHICH MAY EXIST AS CONTRACTOR SHALL BE RESPONSIBLE FOR DIMENSIONS AND DESIGN OF ADEQUATE CONNECTIONS. DETAILS AND SATISFACTORY CONSTRUCTION OF WORK.

SIGNATURE D O Rosbey DATE 1985 APR 24

INSTALLATION, OPERATION AND MAINTENANCE INSTRUCTIONS FOR WALK-IN AND BAG-IN/BAG-OUT FILTER HOUSES AT U.S. DEPARTMENT OF ENERGY WASTE ISOLATION PILOT PLANT CARLSBAD, NEW MEXICO

UNDER
FOLEY COMPANY P.O. 9205-2574
U.S. DEPT. OF ENERGY SPEC. 15883-019

BY
CLEAN AIR DIVISION ENGINEERING DEPARTMENT
AMERICAN AIR FILTER
AN ALLIS CHALMERS COMPANY
LOUISVILLE, KENTUCKY

NUCLEAR ENVIRONMENTAL SYSTEMS
PROJECT 92-1337

PREPARED BY Theresa Walker DATE 25 Jan. '85
Theresa Walker

REVIEWED BY Javier Reyes DATE 25 Jan 85
Javier Reyes

EXHAUST FILTER BUILDING
WIPP. CARLSBAD, NEW MEXICO
CONTRACT NO. DACW47-84-C-0033
FOLEY CO. 7501 FRONT ST. K.C. MO.

I have reviewed the Shop Drawings and data attached. I find them to be in Strict Compliance to the plans and Specs. of this contract and approve them accordingly.

QUALITY CONTROL CHIEF.

APR 1 1985 198 Benny R. Agosto

APPENDIX A
APPENDIX B
APPENDIX C
APPENDIX D
APPENDIX E
APPENDIX F

TABLE OF CONTENTS

1. INTRODUCTION

2. HOUSING INSTALLATION

3. FILTERS

   A. VARICEL

   B. ASTROCEL

4. PIPING AND VALVES

5. PARTS LIST

APPENDICES:

A - AAF DRAWING

B - AAF FILTER BULLETINS

C - BAG-IN/BAG-OUT PROCEDURE

D - FIELD TEST PROCEDURES

E - VALVES

F - DATA SHEETS

1. INTRODUCTION

The purpose of this manual is to present general installation, operation and maintenance requirements for the equipment furnished on this project. The instructions given are meant to be used as a guide. Further detailed information can be obtained by contacting the American Air Filter Company, referencing AAF Project 92-1337 and this manual (NESE-811).

The equipment is shown in the submittal drawing in Appendix A of this manual. Other drawings and bulletins may be included in this manual to identify components and furnish installation, operation and maintenance requirements.

Storage of the unit(s) prior to installation should be provided in a clean and dry environment to preclude oxidation of exposed surfaces and housing skin. Prolonged outside storage of housing is not recommended.

2. HOUSING INSTALLATION

The housing drawing(s) in Appendix A should be studied carefully prior to installation.

Anchor provisions should be made prior to placing the unit in position. The required anchoring is shown in the submittal drawing. The anchor holes on the unit are slightly oversized, but it is suggested that the anchor bolts be embedded in a sleeve for additional adjustment.

Lifting of the housing should be done using the lifting lugs fitted on top the house in as much as possible. A sling spreader should be used to insure against potentially damaging side loads on the lugs and housing members. The housing should be kept level to avoid any undue stressing of the welded joints.

The unit should be placed in position and checked for contact with floor (or other mounting base) at anchor points.

NOTE: If when the unit is in position there is more than 1/8" between the unit and the base, shims must be added at the anchoring point to prevent overstressing the base.

After the unit is bolted in position the perimeter of the base should be grouted to prevent moisture and dirt accumulation.

3. FILTER HANDLING AND INSTALLATION

The filter unit(s) is shipped void of filters in order to reduce the possibility of filter damage. The filters are packed in protective cartons and crates for separate controlled storage.

The following pages will describe the filters used on this application. Filter bulletins are included in Appendix B.

3.A. Varicel Filter

Nuclear Varicels are a series of medium and high efficiency rigid cell side disposable filters for removal of atmospheric dust and particulates from nuclear power plant streams. These filters have low initial resistance, high dust holding capacity, in a choice of three efficiency ranges; 60-65%, 80-85%, 90-95%.

This filter is designed to be a variable capacity unit. It is self-supported and will accept any air volume up to its maximum recommended velocity. If the air volume is less than normal rating, the initial resistance will be proportionally reduced. AAF Varicel Bulletin NES-802A is included in Appendix B for general information and latch installation details.

The final resistance to which Varicel filters are operated is usually a function of the static pressure characteristics of the fan providing the airflow. The final recommended resistances are:

60-65% - 6" deep (P/N 105D-1121953-47) - 1.00" w.g.
12" deep (P/N 105D-1121953-48) - 1.00" w.g.

80-85% - 6" deep (P/N 105D-899765-47) - 1.00" w.g.
12" deep (P/N 105D-899765-48) - 1.00" w.g.

90-95% - 6" deep (P/N 105D-1121946-47) - 1.20" w.g.
12" deep (P/N 105D-1121946-48) - 1.20" w.g.

If the fan characteristics allow, the 60-65% may be operated up to 1.8" w.g.; the 80-85% up to 2.0" w.g. and the 90-95% up to 2.5" w.g. At the higher final resistances, there is no reduction in efficiency, but the cost of horsepower to operate increases significantly.

It is recommended that a gauge be installed across the filter or filter bank to determine the operating pressure drop. When the Varicel has reached its upper limit of allowable operating resistance, it should be removed and replaced with a clean cell. Varicel filters are not designed to be reconditioned.

THE FILTER FOR THIS APPLICATION IS SHOWN IN "PARTS LIST" SECTION OF THIS MANUAL. THIS NUMBER IS TO BE USED IN REORDERING VARICEL FILTERS.

3.B. Astrocel (HEPA) Filter

The Astrocel is a particulate filter of pleated glass fiber media separated by corrugated spacers contained in a metal frame. It is guaranteed to have a minimum efficiency of 99.97% on 0.3 μm DOP particles as determined by MIL-STD-282. Maximum initial resistance as rated flow is 1 inch water gauge. AAF Bulletin CAD-1-110 is included in Appendix B for general information.

Handling

Astrocels are manufactured and tested to most exacting specifications and must be handled with commensurate care if full performance is to be realized in service. One puncture in the glass media can cause unacceptable filtration efficiency. The following precautions should be observed:

1. Leave Astrocels in protective carton until ready for installation.
2. When lifting the filter, always grasp by diagonally opposed corners; the internal area of the filter should never be touched.
3. Never store or carry in the flat position. Always keep carton or filter upright, with pleats vertical.
4. Do not drop or mechanically shock filter.
5. To unpack, open top of carton, invert, and remove carton from filter.

Installation

1. Walk-In Filter House

Prior to installation of filters, inspect the Astrocel mounting frame and its attachment mechanism for foreign debris which could impair the gasket seal. If material is found, clean the areas without the use of solvents which could be absorbed by the activated carbon filters (if they are contained in this house).

To reduce the chances of accidental damage during installation in banks, Astrocels should be installed by rows working from top to bottom.

Place filter with gasket facing mounting frame on the angle iron track. Rotate locking levers so as to move filter engagement latches out of the path of the filter flange moving forward.

Slide to end of travel; filter will slide easily to seat its gasket on the gasket sealing surface.

Pull both sealing bar lever arms to press gasketed flange against mounting frame. Simultaneous movement of lever arms insures uniform gasket loading.

The astrocel is then locked in place by one of the following methods:

- Astrocel I Frame: Pay close attention to engagement of latches into filter box flange. The Astrocel is then locked in place by trapping the lever arm against the rear of the front flange of the filter.
- Astrocel III Frame: The Astrocel is locked in place by applying pressure to the rear of the cell and inserting the lever arm in retaining hole in support leg.

Make a visual check of the filter gasket perimeter.

2. Bag-In/Bag-Out Filter House

The prefilter and HEPA banks are of identical design, bag-in/bag-out system intended to permit loading and unloading of the filters without exposing personnel to contaminants.

Each section is equipped with upper and lower clamping mechanism, section collar to attach the filter changing bag and section door.

The bag-in/bag-out filter changing procedure is in Appendix C of this manual.

Maintenance

Periodic retests are to be performed as required by the nature of the installation to locate cracked welds and gasket leaks from compression set, should they occur. Specific test procedures are outlined separately (not included in this manual). Replace Astrocel filters when the pressure drop across the bank is between 2 in. w.g. and 3 in. w.g. The cell resistance increase is so rapid beyond this range that additional life is not worth the fan power cost.

Filter Removal

1. Walk-In Housing

   Removal of the filter is essentially the reverse of their installation. However, if it is determined that they contain radioactive materials, it is suggested that a 24 x 24 inch piece of polyethelene sheet be placed over the air entering face of the filter. Although when the filter is designed for downstream service this procedure can still be accomplished to a great extent by placing the plastic through the filter holding frame onto the filter. After the plastic is attached, it can then be "bagged" as the filter is removed from the steel holding frame.

2. Bag-In/Bag Out Housing

   See Procedure in Appendix C.

Storage

Adequate care in storage of the Astrocel filter must be taken since one small puncture in the media can cause unacceptable filtration efficiency. The following precautions should be observed:

1. Store filters in a clean and dry environment.
2. Store away from frequently traveled aisleways.
3. Never store filters or carry in a flat position. Always keep carton or filter upright, to keep filter media pleats vertical.

4. Never stack Astrocels more than 3 filters high.

5. Store filters where tagging information can be seen easily.

6. Leave Astrocels in protective carton until ready for installation.

TO REORDER THE ASTROCEL FILTER USE THE PART NUMBER LISTED IN "PARTS LIST" SECTION OF THIS MANUAL.

4. PIPING AND VALVES

Piping arrangements are as shown in Assembly Drawings 107D-1390897 and 107D-1390889 in Appendix A.

Valve drawings and bulletins are located in Appendix E.

5. PARTS LIST

Description	Part Number	Qty. Req'd.
Varicel Filter 60-65% Efficiency	U105D-1121953-48	46
Varicel Filter 90-95% Efficiency	U105D-1121946-48	42
Astrocel Hi Capacity Filter	U105D-1352707-1	92
Bag	(Later)	
2" Valve (Conbraco #70-108)	2284008	10
1" Valve (Conbraco #70-105)	2284016	10
1/4" Valve (Imperial #394-C)	2269454	4

AAF SUBMITTAL DRAWINGS:

R107D-1386390 - 1,890 CFM Unit

R107D-1386085 - 30,000 CFM Unit

R107D-1390897 - Assembly Dwg. 1,890 CFM Unit

R107D-1390889 - Assembly Dwg. 30,000 CFM Unit

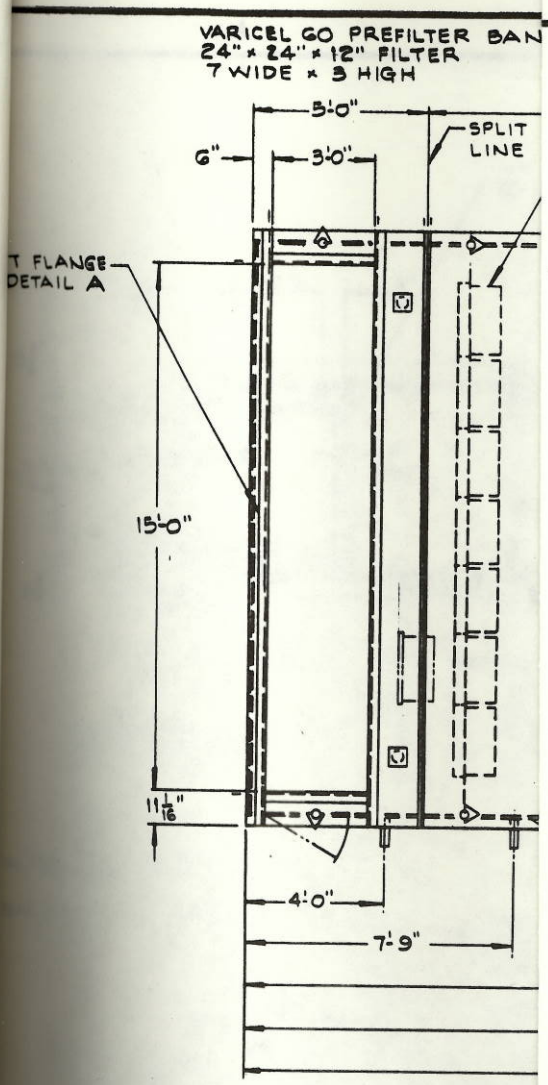

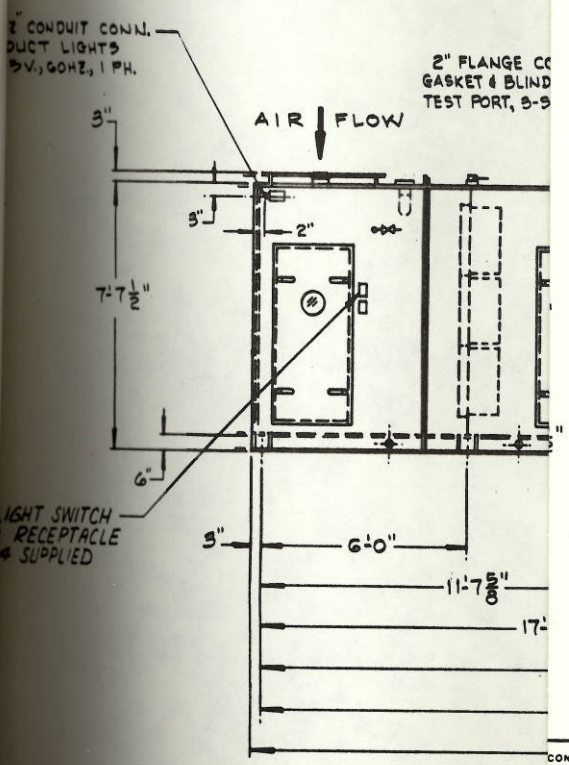

R107D-1386085-B
SHEET 1 OF 2

LET.	CHANGE	DATE	CK'D	APPR
A	(31,775) REDRAWN & REVISED. BP 16 NOV. 84	26 NOV. 84	REM	
B	(31,804) DIM. 25'-6" TO 25'-3" & 1" F.P.T. VALVE (5 SUPPLIED) TO 2" F.P.T. MOYERS JAN. 2, 1985	9 JAN. 85	REM	

NOTES

1. DESIGN PRESSURE: ± 20" W.G.
2. CAPACITY: 30,000 C.F.M.
3. MAT'L.: HOUSING - 3/16" THICK H.R.S. PER ASTM A-36.
   HEPA BANK - 304 S.S., PER ASTM A-240 & A-276.
4. PAINT: INTERIOR PRIME COAT: ZINC CLAD ETHYL SILICATE PRIMER.
   INTERIOR FINISH: TILE-CLAD II ENAMEL.
   EXTERIOR PRIME COAT: KEM-KROMIK METAL PRIMER.
   EXTERIOR FINISH: METALASTIC II ENAMEL.
5. APPROX. WEIGHTS: 12,000 LBS. SHIPPING.
   15,000 LBS. OPERATING.
6. UNIT TAG NO'S.: 41-B-856 SHOWN
   41-B-857 OPPOSITE.
7. UNIT SHIPPED IN THREE SECTIONS, FIELD WELDED.
8. FILTERS SHIPPED SEPARATE FOR INSTALLATION BY OTHERS.
9. QUALIFICATIONS OF WELDERS & PROCEDURES PER ASME IX, WELDING TO AWS D1.1.

JOB: WASTE ISOLATION PILOT PLANT
CONTRACTOR: FOLEY CO.
CUSTOMER: DEPARTMENT OF ENERGY
SPECIFICATION: 15883-019
AAF PROJECT NO.: 92-1337

SUBMITTAL DRAWING

NEXT ASSEMBLY

CONFIDENTIAL-PROPERTY of ALLIS-CHALMERS CORP.

Tolerances Unless Otherwise Specified: ± 1/4

Material
Scale NONE
Dwn BP 16 Nov 84
Ckd
Appr
Date

AAF American Air Filter
AN ALLIS-CHALMERS COMPANY
215 CENTRAL AVE., LOUISVILLE, KENTUCKY

FILTER HOUSE ASSEMBLY, WASTE ISOLATION PILOT PLANT (UNITS 41-B-856 & 41-B-857)

SHEET SIZE D

SECTION NO. R107D-1386085-B SHEET 1 OF 2

APPENDIX B
APPENDIX C
APPENDIX D
APPENDIX E
APPENDIX F

4

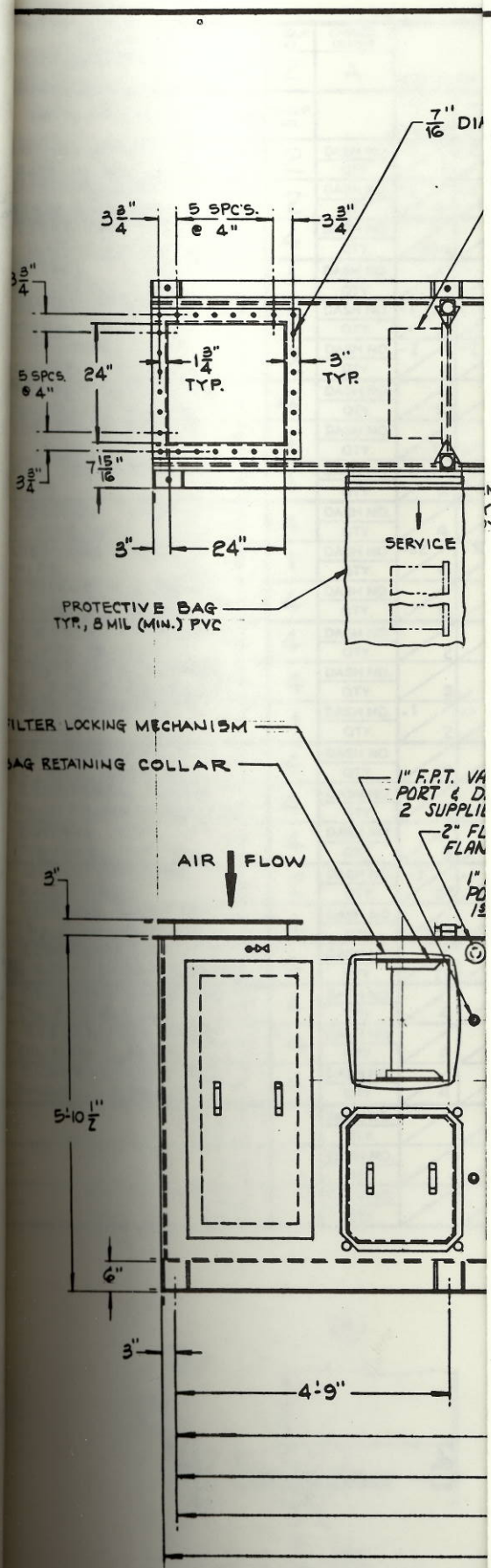

R107D-1386390-B

LET.	CHANGE	DATE	CK'D	APPR.
A	(31775) REDRAWN & REVISED. BP 29 NOV. 84	30 NOV. 84	REM	
B	(31,804) 1" F.P.T. VALVE, 5 SUPPLIED TO 10 SUPPLIED MOYNE JAN 2, 1985	9 JAN 85	REM	

NCHOR BOLTS.
Y CCP-19 CONTRACTOR) MAX. STATIC
YNAMIC BOLT LOAD 500 LBS.

NOTES

1. DESIGN PRESSURE: ± 20" W.G.
2. CAPACITY: 1890 CFM.
3. MAT'L.: HOUSING- 3/16" THICK H.R.S. PER ASTM A-36.
4. PAINT: INTERIOR PRIME COAT- ZINC CLAD ETHYL SILICATE PRIMER.
   INTERIOR FINISH- TILE-CLAD II ENAMEL.
   EXTERIOR PRIME COAT- KEM-KROMIK METAL PRIMER
   EXTERIOR FINISH- METALISTIC II ENAMEL.
5. APPROX. WEIGHT: 3500 LBS. SHIPPING
   3750 LBS. OPERATING
6. UNIT TAG NO'S.: 41-B-884 SHOWN
   41-B-883 OPPOSITE
7. FILTERS SHIPPED SEPARATE FOR INSTALLATION BY OTHERS.
8. QUALIFICATIONS OF WELDERS & PROCEDURES PER ASME IX, WELDING TO AWS D1.1.

JOB: WASTE ISOLATION PILOT PLANT
CONTRACTOR: FOLEY CO.
CUSTOMER: DEPARTMENT OF ENERGY
SPECIFICATION: 15883-019
AAF PROJECT NO.: 92-1537

SUBMITTAL DRAWING

NEXT ASSEMBLY

-PROPERTY of
ERS CORP.
Material
Scale NONE | Chk REM | 19 OCT. Date 84
Dwn BP | 18 OCT. Date 84 | Appr | 19 OCT. Date

AAF American Air Filter
AN ALLIS-CHALMERS COMPANY
215 CENTRAL AVE., LOUISVILLE, KENTUCKY

FILTER HOUSE ASSEMBLY, WASTE ISOLATION PILOT PLANT (UNITS 41-B-883 & 41-B-884)

SHEET SIZE D | SECTION NO. R107D-1386390-B

APPENDIX B
APPENDIX C
APPENDIX D
APPENDIX E
APPENDIX F

ASSEMBLY	GROUP NO	CHANGE LETTER	ASS'Y. DASH NO. -1 (SHOWN)	ASS'Y. DASH NO. -2 (OPP)
R107-1390897(D) FILTER HOUSE ASS'Y.	2	A		

PART NO. & DESCRIPTION	GROUP NO.		-1 (SHOWN)	-2 (OPP)
R107-1391598(D) HOUSE (WELDING) ASS'Y.	2	DASH NO.	-1	-2
		QTY.	1	
R107-1392315(B) ACCESS PANEL ASS'Y.	2	DASH NO.	-1	-1
		QTY.	4	
2232981(A) STUD (3/8-16 x 1½ LG., WELD, ST. STL.)	4	DASH NO.		
		QTY.	104	10
2017408 NUT (3/8-16, HEX., PLT'D.)	4	DASH NO.		
		QTY.	104	10
U107-1384973(B) DOOR ASS'Y.	2	DASH NO.	-1	-1
		QTY.	6	
U107-1145820(B) NAMEPLATE INST'L.	2	DASH NO.	-2	-2
		QTY.	1	
2284016(B) VALVE CONBRACO # 70-105)	4	DASH NO.		
		QTY.	10	
2223501(B) NIPPLE (1", CLOSE)	4	DASH NO.		
		QTY.	10	
R107-1393099(A) PIPE	1	DASH NO.	-1	-1
		QTY.	4	
2020097 CAP (1", PIPE, M.I.)	4	DASH NO.		
		QTY.	4	
U193-1040443(A) PIPE	1	DASH NO.	-32	-32
		QTY.	6	
2221448(A) ELBOW (1", PIPE, 90°, 150#, M.I.)	4	DASH NO.		
		QTY.	6	
2002509 FLANGE (2", PIPE, BLIND)	4	DASH NO.		
		QTY.	2	
2237022(B) FLANGE (2", PIPE, THREADED)	4	DASH NO.		
		QTY.	2	
R107-1391088(A) GASKET	1	DASH NO.	-1	-1
		QTY.	2	
2020386 NIPPLE (2", PIPE, CLOSE)	4	DASH NO.		
		QTY.	2	
2204725(A) SCREW (3/8-11 x 2½ LG., H.H., CAP, PLT'D.)	4	DASH NO.		
		QTY.	8	
2017457 NUT (3/8-11, HEX., PLT'D.)	4	DASH NO.		
		QTY.	8	
U114-1175322(B) KNOB ASS'Y.	2	DASH NO.	-1	-1
		QTY.	24	
2017556 WASHER (3/8, PLAIN, PLT'D.)	4	DASH NO.		
		QTY.	24	
2284404(A) NUT (3/8-16, HEX., CENTERLOCK, PLT'D.)	4	DASH NO.		
		QTY.	24	
2225381(A) COUPLING (1/4, PIPE, FULL)	4	DASH NO.		
		QTY.	4	TYP.
2223220(B) NIPPLE (1/4, PIPE, CLOSE)	4	DASH NO.		
		QTY.	4	
2269454(A) VALVE (IMPERIAL # 394-C)	4	DASH NO.		
		QTY.	4	
—		DASH NO.		
		QTY.		
—		DASH NO.		
		QTY.		
—		DASH NO.		
		QTY.		

LET.	CHANGE	DATE	CK'D	APPR
A	(31868) -1 & -2 ASS'Y'S., ITEM 19, -1 ADDED TO B/M. R.M. 6 FEB. 86	6 FEB 86	REM	

— NOTES —

1. ALL WELDING PER APPROVED PROCEDURES SHOWN ON THE WELD LOG.
2. LOCATE ACCESS PANEL (ITEM 2) AS SHOWN AND USE AS A TEMPLATE TO LOCATE WELD STUDS (ITEM 3).
3. FORM 13/16 ±1/64 DIA. HOLE, 4-PLS.
4. HOLES IN PIPE (ITEM 9) TO BE LOCATED PERPENDICULAR TO AIR STREAM.

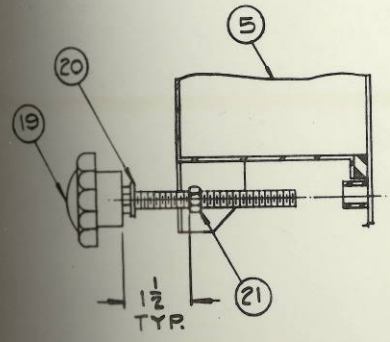

SECTION A-A

NEXT ASSEMBLY

PROPERTY of ... CORP. Material — Scale — Cad REM 10 JAN. 86 Date — Dwn GP Date 8-5-85 Appr — 10 JAN. 86 Date

American Air Filter
AN ALLIS-CHALMERS COMPANY
215 CENTRAL AVE., LOUISVILLE, KENTUCKY

FILTER HOUSE ASSEMBLY, WASTE ISOLATION PILOT PLANT (UNITS 41-B-883 & 41-B-884)

SHEET SIZE D | SECTION NO R107 | 1390897

4 | 3

ASSEMBLY	GROUP NO	CHANGE LETTER
R107-1390889(D) FILTER HOUSE ASS'Y.	2	

PART NO. & DESCRIPTION	OPER. NO.	GROUP NO.		ASS'Y. DASH NO. -1 (SHOWN)	-2 (OPP.)
R107-1390723(D) INLET (WELDING) ASS'Y.		2	DASH NO.	-1	-2
			QTY.	1	1
R107-1390182(D) PRE-FILTER (WELDING) ASS'Y.		2	DASH NO.	-1	-2
			QTY.	1	1
R107-1390863(D) OUTLET (WELDING) ASS'Y.		2	DASH NO.	-1	-2
			QTY.	1	1
R107-1365691(D) DOOR INST'L.		2	DASH NO.	-7	-8
			QTY.	4	4
R107-1391119(D) ELECTRICAL INST'L.		2	DASH NO.	-1	-2
			QTY.	1	1
R107-1391127(D) PIPING INST'L.		2	DASH NO.	-1	-2
			QTY.	2	2
2284008(B) VALVE (CONBRACO # 70-108)		4	DASH NO.		
			QTY.	10	10
2237022(B) FLANGE (2" THREADED)		4	DASH NO.		
			QTY.	3	3
R107-1391085(A) GASKET		1	DASH NO.	-1	-1
			QTY.	3	3
2020386 NIPPLE (2" CLOSE)		4	DASH NO.		
			QTY.	8	8
2204725(A) SCREW (3/8-11 x 2½" LG., H.H., CAP., PLT'D.)		4	DASH NO.		
			QTY.	12	12
2017457 NUT (5/8-11, HEX., PLT'D.)		4	DASH NO.		
			QTY.	12	12
2002509 FLANGE (2" BLIND)		4	DASH NO.		
			QTY.	3	3
U107-1145820(B) NAMEPLATE INST'L.		2	DASH NO.	-2	-2
			QTY.	1	1
			DASH NO.		
			QTY.		
			DASH NO.		
			QTY.		
			DASH NO.		
			QTY.		
			DASH NO.		
			QTY.		
			DASH NO.		
			QTY.		
			DASH NO.		
			QTY.		
			DASH NO.		
			QTY.		
			DASH NO.		
			QTY.		
			DASH NO.		
			QTY.		
			DASH NO.		
			QTY.		
			DASH NO.		
			QTY.		
			DASH NO.		
			QTY.		
			DASH NO.		
			QTY.		
			DASH NO.		
			QTY.		

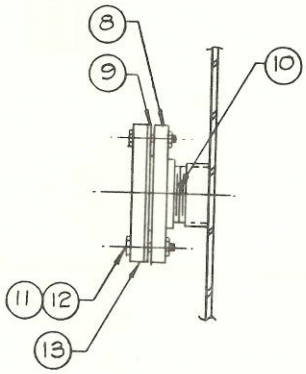

SECTION A-A

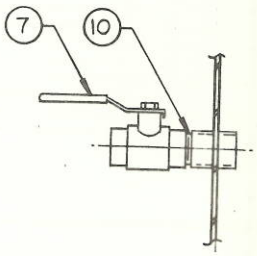

SECTION B-B

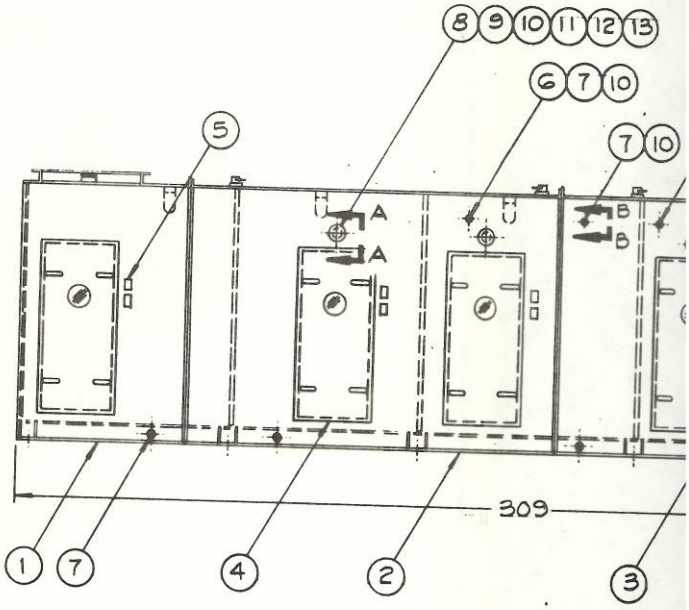

SIDE ELEVATION

4

1

R107D-1386085-B
SHEET 2 OF 2

LET.	CHANGE	DATE	CK'D	APPR
A	SEE SHT. 1. BP 16 NOV. 84	26 NOV. 84	REM	
B	SEE SHEET 1 MOYERS JAN 2, 1985	9 JAN. 85	REM	

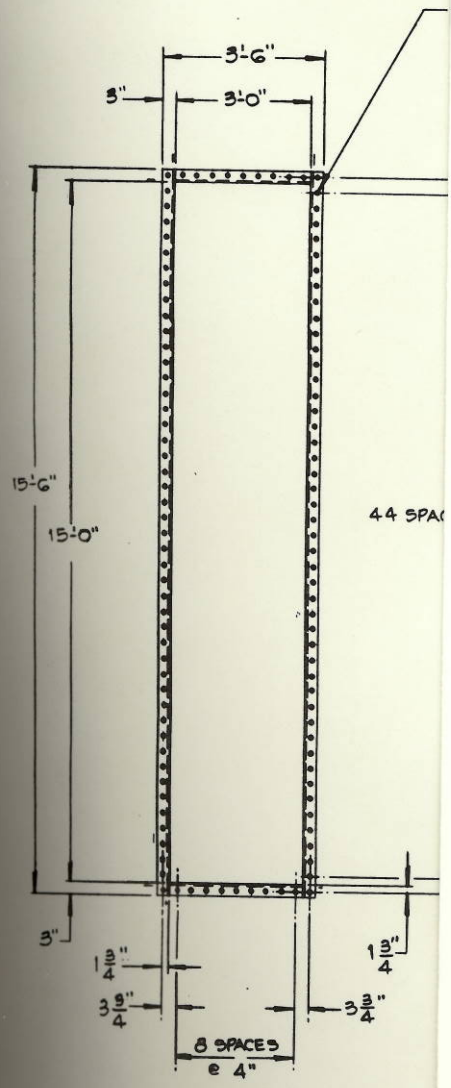

DETAIL A
(INLET DRILLING)

B

A

APPENDIX B

APPENDIX C

APPENDIX D

APPENDIX E

APPENDIX F

NEXT ASSEMBLY

NFIDENTIAL-PROPERTY of
LLIS-CHALMERS CORP.

rances Unless Otherwise
cified:

Material

Scale NONE | Ckd | Date

Dwn. BP | 16 Nov. Date 84 | Appr. | Date

American Air Filter
AN ALLIS-CHALMERS COMPANY
215 CENTRAL AVE., LOUISVILLE, KENTUCKY

FILTER HOUSE ASSEMBLY,
WASTE ISOLATION PILOT PLANT
(UNITS 41-B-856 & 41-B-857)

SHEET SIZE D

SECTION NO. R107D-1386085-B
SHEET 2 OF 2

AAF FILTER BULLETINS:

NES-802A - Varicel

CAD-1-110-E - Astrocel

Nuclear Medium & High Efficiency osable Air Filters

Varicel
Nuclear Series 60, 90 and 100
24" x 24" x 12" D size
(610 mm x 610 mm x 290 mm D)

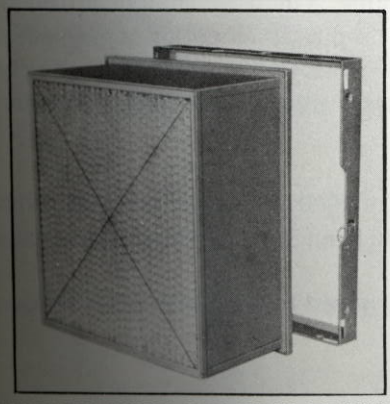

VARICEL WITH HOLDING FRAME

Nuclear Varicels are a series of medium and high efficiency rigid cell side disposable filters for removal of atmospheric dust and particulates from nuclear power plant air streams. These filters have low initial resistance, high dust holding capacity, in a choice of three efficiency ranges

L CONSTRUCTION FEATURES:

- **Galvanized Steel Cell Sides** with media retaining flanges and 3/4" flanged header. Varicels may be installed with either flanged header face or cell side face inserted into support frame first.
- **Supported Rigid Media Pack** - 110 sq. ft. of pleated media surface area. Maximum surface area provides savings in operating costs.
- **Wire Braces** - Crossed wire bracing on one face provides added protection against rough handling or racking.
- **Media Separators** of crimped aluminum.
- **Glass Packing Sealant** for media behind retaining flanges, absorbs shock yielding to motion yet maintaining positive seal. Eliminates shearing of media common with glued construction.
- **UL Rated Class 1 Fire Resistant** - Listed by Underwriters Laboratory.
- **Quick Changeout Holding Frames** of 16 ga. galvanized steel or stainless steel with neoprene foam seal gasket and four quick release filter retaining latches.
- **Three efficiency ranges** - Superfine spun glass fiber pleated media - No. 60 media efficiency for 60-65% dust spot efficiency on atmospheric dust; No. 90 high efficiency for 80-85%., No. 100 high efficiency for 90-95%.
- **Air Flow:** 500 fpm face velocity - 2000 cfm for this 24" x 24" x 11 1/2" size.
- **Unaffected by variable air volume** - well suited to variable volume systems.

NUCLEAR VARICEL ENGINEERING DATA

icel Filter	Recommended Rating (based on max. rec. face velocity.)	Resistance - in. W.G. (kPa)		Average Efficiency Dust Spot Atmospheric ASHRAE 52-76
		Initial	Final	
2424-12AM m Efficiency	2000 cfm 3400 M³/hr	0.50 in. W.G. 0.12 kPa	1.20 in. W.G. 0.30 kPa	60-65% 0.30 kPa
2424-12AM fficiency	2000 cfm 3400 M³/hr	0.55 in. W.G. 0.13 kPa	1.20 in. W.G. 0.30 kPa	80-85%
-2424-12AM fficiency	2000 cfm 3400 M³/hr	0.65 in. W.G. 0.16 kPa	1.20 in. W.G. 0.30 kPa	90-95%

All are 24" x 24" x 12" (610 mm x 610 mm x 290 mm) nominal size. — Actual size is 23-3/8" x 23-3/8" flange by 11-1/2" (594 mm x 594 mm x 290 mm) deep. — Weight is 20 lbs. (9 Kg); media area is 110 sq. ft. (10.2 M²)

SUGGESTED NUCLEAR VARICEL SPECIFICATION

Filters shall be of the (medium) (high) efficiency, dry, disposable cell type suitable for variable
Components shall consist of waterproof glass media; crimped aluminum separators; glass packing se
galvanized steel header; and 1/2" media retaining flanges on both filter faces. Each cell shall b
reinforced against racking by crossed wire bracing on one face. Filters shall be rated UL Class 1.

A permanent (galvanized steel) (stainless steel) 16 ga. holding frame, 4 in. deep shall be provided,
insure a positive seal against leakage of unfiltered air, and shall be pre-punched for convenient as
banks of the dimensions shown on the drawings. The frame shall be fitted with four integral spring typ
firmly seat the filter cartridge against sponge rubber gasket. Frames shall be installed to provide for s
the (dirty) (clean) air side.

Each 24" x 24" cell shall be 11-1/2" deep and shall have a capacity of 2000 CFM at an initial resistance
W.G. The average efficiency shall be *_____% by the ASHRAE 52-76 Dust Spot Test Method of Atmosp

The filter shall be Varicel Nuclear Series (60) (90) (100) as manufactured by American Air Filter Com

*** See Engineering Data.**

AAF NUCLEAR ENVIRONMENTAL SYSTEMS include complete systems for cleaning and cooling atmo
in nuclear power plants:

- **Air Cleaning Units** with HEPA's, Carbon Adsorbers, Medium & High Efficiency filters, Moistu
tors, Heaters, Coils, Fans.
- **Air Cooling Units** as Containment Coolers, Air Handling Units, Special Coolers, N Stamp Coil A

LATCH AND PRE-FILTER DETAILS

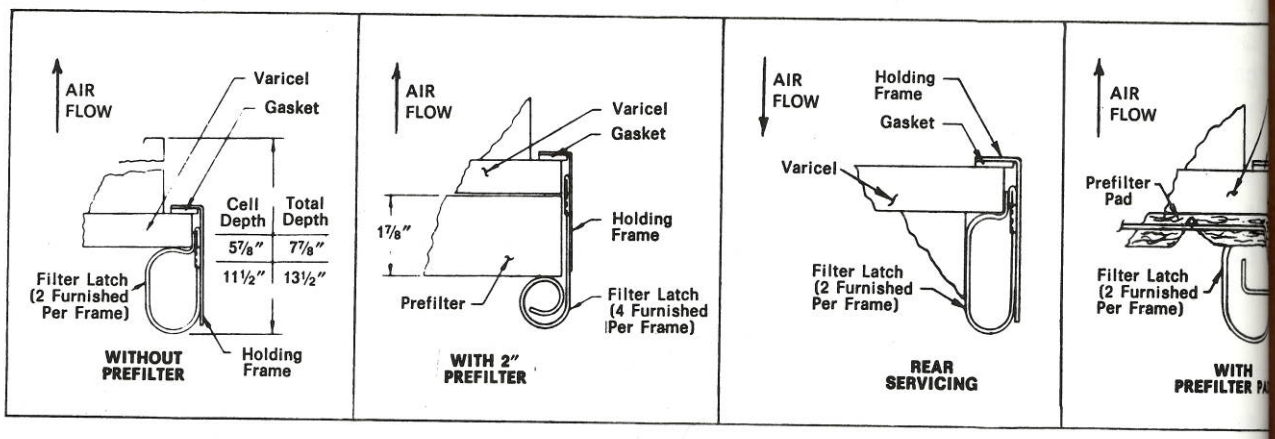

American Air Filter

AN ALLIS-CHALMERS COMPANY

Better Air is Our Business®

CLEAN AIR DIVISION • P.O. BOX 35260, LOUISVILLE, KENTUCKY 40232-5260

Astrocel®

High Efficiency Particulate Air Filters (HEPA)
Ultra Low Penetration Air Filters (ULPA)
VHSI Laser Tested Filters

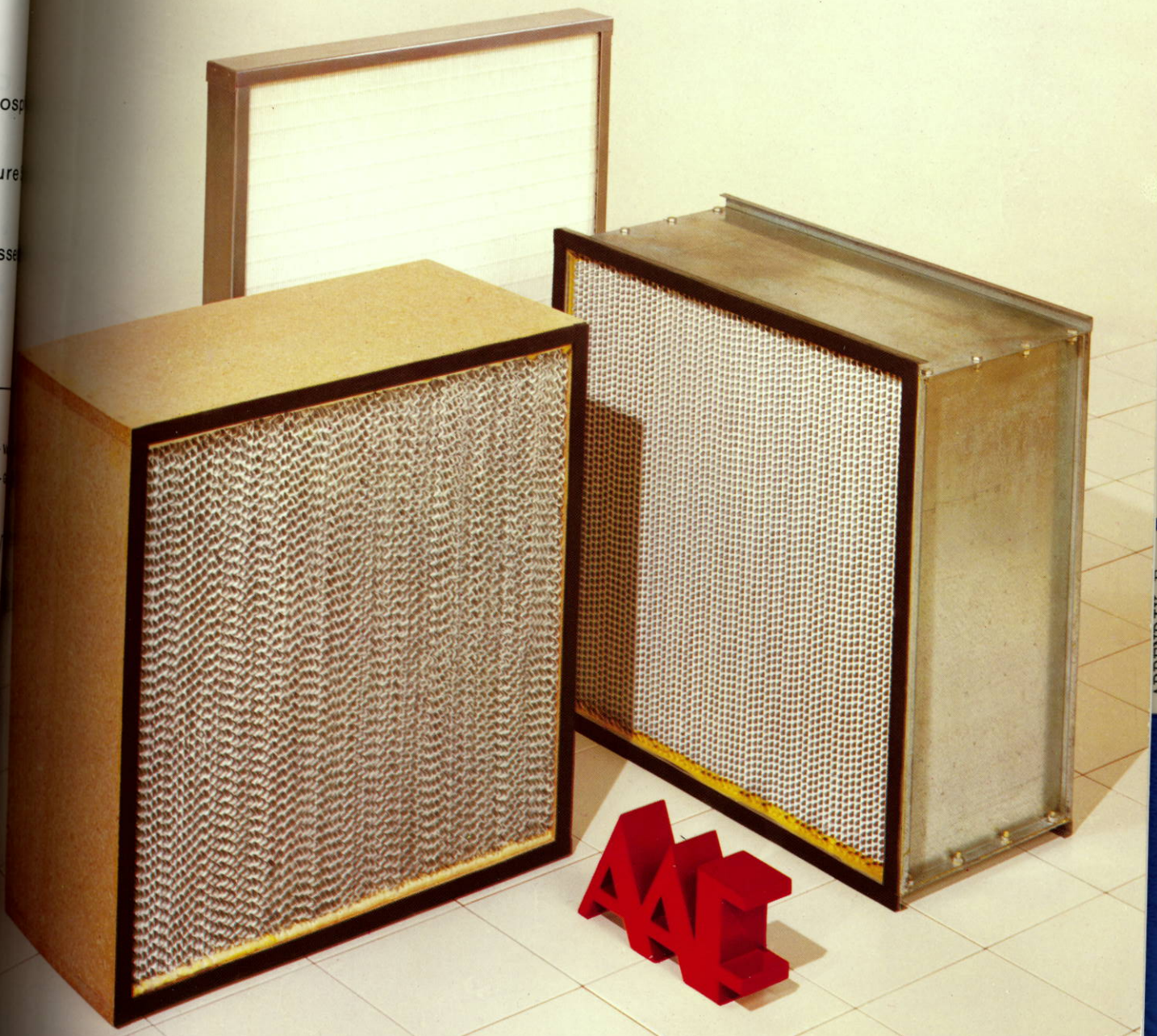

APPENDIX C
APPENDIX D
APPENDIX E
APPENDIX F

DATA SHEETS

DATA SHEET DS-15883-019-01

HIGH EFFICIENCY PARTICULATE AIR FILTER UNITS

EQUIPMENT TAG NUMBER	41-B-883, 41-B-884
MANUFACTURER'S NAME	American Air Filter
QUANTITY (NUMBER REQUIRED)	2
HOUSING TYPE (WALK-IN/BAG-IN BAG-OUT/ENCLOSED)	BAG-IN, BAG-OUT
CAPACITY (RATED AIR FLOW)	1,890 CFM
FILTER BANK CONFIGURATION	1 W X 2 H
OVERALL DIMENSIONS (L* x W x H)	19' x 6' x 3'
TOTAL WEIGHT (WITH CLEAN FILTERS)	3750 LBS

* L IS IN THE DIRECTION OF AIR FLOW

	MOD. EFF. PREFILTER	HIGH EFF. PREFILTER	HEPA
MANUFACTURER'S MODEL NUMBER	1121953-48	N/A	1352707-1
NUMBER OF FILTER BANKS	1	N/A	2
MAX. RATED AIR FLOW (CFM)/CELL	2000	N/A	1765
EFFICIENCY (%) AT MAX. FLOW	60	N/A	99.97
INITIAL RESISTANCE (INCHES WG) AT MAX. FLOW	.50	N/A	1.0
EFFICIENCY (%) AT 1500 CFM	60	N/A	99.97
INTIAL RESISTANCE (INCHES WG) AT 1500 CFM	.30	N/A	.85

84B0006

AAF 20 NOV 84
BKL

** Revised 2/28/85

DATA SHEET DS-15883-019-01

HIGH EFFICIENCY PARTICULATE AIR FILTER UNITS

EQUIPMENT TAG NUMBER	41-B-856, 41-B-857
MANUFACTURER'S NAME	American Air Filter
QUANTITY (NUMBER REQUIRED)	2
HOUSING TYPE (WALK-IN/BAG-IN BAG-OUT/ENCLOSED)	WALK IN TYPE
CAPACITY (RATED AIR FLOW)	30,000 CFM
FILTER BANK CONFIGURATION	7 W X 3 H
OVERALL DIMENSIONS (L* x W x H)	**26' x 16'10" x 7'7-1/2"
TOTAL WEIGHT (WITH CLEAN FILTERS)	13,500 LBS

* L IS IN THE DIRECTION OF AIR FLOW

	MOD. EFF. PREFILTER	HIGH EFF. PREFILTER	HEPA
MANUFACTURER'S MODEL NUMBER	1121953-48	1121946-48	1352707-1
NUMBER OF FILTER BANKS	1	1	2
MAX. RATED AIR FLOW (CFM)/CELL	2000	2000	1765
EFFICIENCY (%) AT MAX. FLOW	60	90	99.97
INITIAL RESISTANCE (INCHES WG) AT MAX. FLOW	.50	.65	1.0
EFFICIENCY (%) AT 1500 CFM	60	90	99.97
INTIAL RESISTANCE (INCHES WG) AT 1500 CFM	.30	.40	.85

84B0006

Flanders®
FOREMOST IN AIR FILTRATION

HEPA Filters
PB-1401-1103

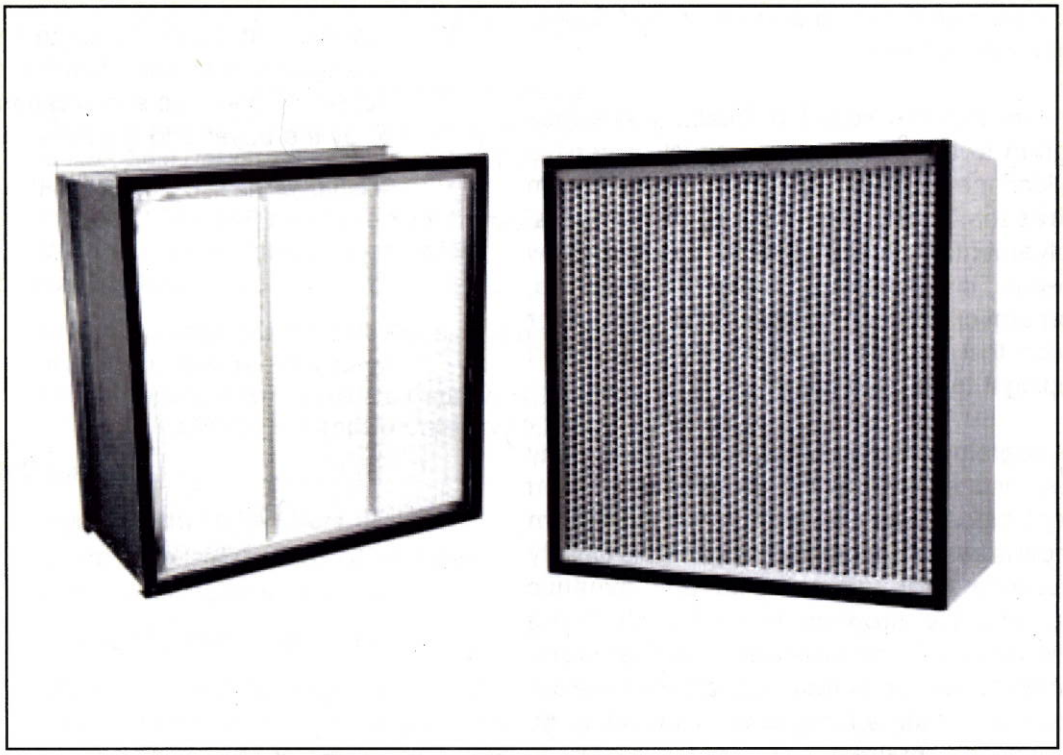

HEPA Filters

For High Efficiency Applications

- *IEST-RP-CC001.3*
- *MIL-STD-282*

A Wholly Owned Subsidiary of Flanders Corporation