Environmental Protection Division
Environmental Compliance Programs (ENV-CP)
PO Box 1663, K490
Los Alamos, New Mexico 87545
(505) 667-0666

National Nuclear Security Administration
Los Alamos Field Office, A316
3747 West Jemez Road
Los Alamos, New Mexico, 87545
(505) 667-5794/Fax (505) 667-5948

Date: JUL 29 2014
Symbol: ENV-DO-14-0178
LAUR: 14-25291, 14-25292, 14-25293, 14-25294, 14-25295, 14-25296, 14-25297
Locates Action No.: Not Applicable

Mr. John E. Kieling
Hazardous Waste Bureau
New Mexico Environment Department
2905 Rodeo Park Drive East, Building 1
Santa Fe, NM 87505

Dear Mr. Kieling:

Subject: Transmittal of Information Requested During New Mexico Environment Department/Los Alamos National Laboratory Daily Technical Phone Call – Documentation of Procedure Review and Approval

The purpose of this letter is to transmit information requested during the New Mexico Environment Department (NMED)/Los Alamos National Laboratory (LANL) semi-weekly technical phone calls that are held as stipulated in the modified Administrative Order No. 5-19001 issued by the NMED. The U.S. Department of Energy (DOE) and the Los Alamos National Security, LLC (LANS), the Permittees, have enclosed with this letter multiple revisions of two procedures and the accompanying review/approval documentation in fulfillment of #21 of the *Requested Information/Pending Issues* table included as part of the written submission associated with the technical phone calls.

During discussions on July 3, 2014 NMED representatives requested information on the document approval and review processes for procedures utilized when remediation of nitrate salt-bearing waste occurred at the Waste Characterization, Reduction, and Repackaging Facility (WCRRF). Included as Enclosure 1 is Revision 36 of EP-WCRR-WO-DOP-0233,*WCRRF Waste Characterization Glovebox Operations*. The first page of Enclosure 1 is the completed P2010 Information Release Form. This form documents the release of the procedure to other entities after it is finalized by the responsible author. In this case, release of the procedure is intended for "CCP & Public Release". Enclosures 2 and 3 provide Revisions 37 and 38 of EP-WCRR-WO-DOP-0233, but do not include an associated Information Release Form.

In addition to procedure EP-WCRR-WO-DOP-0233, revisions for an additional relevant procedure are incorporated in this transmittal for completeness. Four revisions of EP-WCRR-WO-DOP-1198, *WCRRF*

Waste Characterization Glovebox Operations are included and are described briefly as follows:

- Enclosure 4: EP-WCRR-WO-DOP-1198, R0 includes the initial issuance of the procedure.
- Enclosure 5: EP-WCRR-WO-DOP-1198, R0, IPC-1 contains the original procedure with changes incorporated via an Immediate Procedure Change (IPC) Cover. This is included as the first page of Enclosure 5.
- Enclosure 6: EP-WCRR-WO-DOP-1198, R1 is Revision 1 of the procedure.
- Enclosure 7: EP-WCRR-WO-DOP-1198, R1, IPC-1 includes on the first page of the enclosure a completed P2010 Information Release Form as described above and changes were made to the procedure via an IPC Cover located on the fourth page of the enclosure.

If you have comments or questions regarding this submittal, please contact Mark P. Haagenstad at (505) 665-2014 or Gene E. Turner at (505) 667-5794.

Sincerely,

Alison M. Dorries
Division Leader
Environmental Protection Division
Los Alamos National Security LLC

Sincerely,

Gene E. Turner
Environmental Permitting Manager
Environmental Projects Office
Los Alamos Field Office
U.S. Department of Energy

AMD:GET:MPH:LVH/lm

Enclosures:
(1) EP-WCRR-WO-DOP-0233, R36 WCRRF Waste Characterization Glovebox Operations
(2) EP-WCRR-WO-DOP-0233, R37: WCRRF Waste Characterization Glovebox Operations
(3) EP-WCRR-WO-DOP-0233, R38: WCRRF Waste Characterization Glovebox Operations
(4) EP-WCRR-WO-DOP-1198, R0: WCRRF Waste Characterization Glovebox Operations
(5) EP-WCRR-WO-DOP-1198, R0, IPC-1: WCRRF Waste Characterization Glovebox Operations
(6) EP-WCRR-WO-DOP-1198, R1: WCRRF Waste Characterization Glovebox Operations
(7) EP-WCRR-WO-DOP-1198, R1, IPC-1: WCRRF Waste Characterization Glovebox Operations

Cy: Ryan Flynn, NMED, Santa Fe, NM, (E-File)
Tom Blaine, NMED, Santa Fe, NM, (E-File)
Steve Pullen, NMED/HWB, Santa Fe, NM, (E-File)
Timothy Hall, NMED/HWB, Santa Fe, NM, (E-File)
Trais Kliphuis, NMED, Santa Fe, NM, (E-File)
Peter Maggiore, NA-LA, (E-File)
Lisa Cummings, NA-LA, (E-File)
Gene E. Turner, NA-LA, (E-File)
Eric L. Trujillo, NA-LA, (E-File)
Carl A. Beard, PADOPS, (E-File to aosburn@lanl.gov)

Cy (continued):
Michael T. Brandt, ADESH, (E-File)
Jeffery D. Mousseau, ADEP, (E-File)
Daniel R. Cox, ADEP, (E-File)
Victoria A. George, REG-DO, (E-File)
Anthony R. Grieggs, ENV-CP, (E-File)
Deborah K. Woitte, LC-ESH, (E-File)
Bill D. Zwick, MQ, (E-File)
Mark P. Haagenstad, ENV-CP, (E-File)
Luciana Vigil-Holterman.ENV-CP, (E-File)
lasomailbox@nnsa.doe.gov, (E-File)
locatesteam@lanl.gov, (E-File)
env-correspondence@lanl.gov, (E-File)

COPY

Environmental Protection Division
Environmental Compliance Programs (ENV-CP)
PO Box 1663, K490
Los Alamos, New Mexico 87545
(505) 667-0666

National Nuclear Security Administration
Los Alamos Field Office, A316
3747 West Jemez Road
Los Alamos, New Mexico, 87545
(505) 667-5794/Fax (505) 667-5948

Date: JUL 29 2014
Symbol: ENV-DO-14-0178
LAUR: 14-25291, 14-25292, 14-25293, 14-25294, 14-25295, 14-25296, 14-25297
Locates Action No.: Not Applicable

RECEIVED
JUL 29 2014
NMED
Hazardous Waste Bureau

Mr. John E. Kieling
Hazardous Waste Bureau
New Mexico Environment Department
2905 Rodeo Park Drive East, Building 1
Santa Fe, NM 87505

Dear Mr. Kieling:

Subject: Transmittal of Information Requested During New Mexico Environment Department/Los Alamos National Laboratory Daily Technical Phone Call – Documentation of Procedure Review and Approval

The purpose of this letter is to transmit information requested during the New Mexico Environment Department (NMED)/Los Alamos National Laboratory (LANL) semi-weekly technical phone calls that are held as stipulated in the modified Administrative Order No. 5-19001 issued by the NMED. The U.S. Department of Energy (DOE) and the Los Alamos National Security, LLC (LANS), the Permittees, have enclosed with this letter multiple revisions of two procedures and the accompanying review/approval documentation in fulfillment of #21 of the *Requested Information/Pending Issues* table included as part of the written submission associated with the technical phone calls.

During discussions on July 3, 2014 NMED representatives requested information on the document approval and review processes for procedures utilized when remediation of nitrate salt-bearing waste occurred at the Waste Characterization, Reduction, and Repackaging Facility (WCRRF). Included as Enclosure 1 is Revision 36 of EP-WCRR-WO-DOP-0233, *WCRRF Waste Characterization Glovebox Operations*. The first page of Enclosure 1 is the completed P2010 Information Release Form. This form documents the release of the procedure to other entities after it is finalized by the responsible author. In this case, release of the procedure is intended for "CCP & Public Release". Enclosures 2 and 3 provide Revisions 37 and 38 of EP-WCRR-WO-DOP-0233, but do not include an associated Information Release Form.

In addition to procedure EP-WCRR-WO-DOP-0233, revisions for an additional relevant procedure are incorporated in this transmittal for completeness. Four revisions of EP-WCRR-WO-DOP-1198, *WCRRF*

ENCLOSURE 1

EP-WCRR-WO-DOP-0233, R36 WCRRF Waste Characterization Glovebox Operations

ENV-DO-14-0178

LA-UR-14-25291

Date: JUL 2 9 2014

P2010 Information Release Form

This form is to be completed and submitted to the Records Management Coordinator with copies BEFORE you present or submit for release any technical work.	Package for review must include: 1. Copy of submission 2. Completed **P2010 Information Release Form** and **Cover sheet** on each submission. 3. Completed **Records Submittal Form** for each submission submitted to RMDC.
P2010- 3327/ERID-226613	

1. Author(s) name(s)					2. Author(s) Signature & Date
Last	First	Middle	Z #	Group (or affiliation)	
Jalbert	Louis	E	121997	LTP-DDP	

3. Title of Article (in caps: spell out all symbols):

WCRRF Waste Characterization Glovebox Operations
EP-WCRR-WO-DOP-0233, R.36, August 1, 2012

4. Type of Information:	5. Intended For:
X Acceptable Knowledge (AK) reports, radioisotope data, and/or source documents	CCP & Public Release
☐ Other (**Must be PROJECT 2010, specific):** _____	6. Particulars: NONE

7. Z number, Name and Phone of contact for notification of release	Mail Stop
198464, Randy Fitzgerald, X73074, 505-231-7582 (cell)	J962

8. Typed/Printed Name of Derivative Classifier	Signature and Date
Teresa L. Tingey	9/05/2012
☐ Unclassified ✓ ☐ Unclassified, Limited Explain:	

9. P2010 Public Release Official	Signature and Date:
Teresa L. Tingey	9/05/2012
10. Typed/Printed Name of Responsible Author/Requestor	**Signature and Date:**
Randy Fitzgerald	9/05/2012
11. TWPS Operations Manager	**Signature and Date:**
Stephanie Griego	Gail M. Welsh (for Stephanie Griego) 9/05/2012

P2010- 3327/ERID-226613

Approved for public release:

Title:	WCRRF Waste Characterization Glovebox Operations EP-WCRR-WO-DOP-0233, R.36, August 1, 2012
Author(s):	L. Jalbert
Submitted to:	CCP and Public Release

EP-WCRR-WO-DOP-0233, R.36

WCRRF Waste Characterization Glovebox Operations

Effective Date: 8-1-2012

NOTE *This procedure may be either a Moderate or High/Complex Hazard activity based on the anticipated radiation levels during the performance of the activity in accordance with P300 requirements.*

Hazard Class:	☐ Low	☒ Moderate	☒ High/Complex
Usage Mode:	☐ Reference	☐ UET	☒ Both UET & Reference

The Responsible Manager has determined that the following organizations' review/concurrence is required for the initial document and for major revisions a same type and level review is required. Review documentation is contained in the Document History File:

TRU Waste Project Support
Engineering
Quality Assurance
Radiation Protection
Industrial Hygiene and Safety
Subject-Matter Expert
Environmental Stewardship
Operations Support
Shift Operations Manager

Responsible Manager, LTP-DDP Operations Manager

Lou Jalbert	/ 121997	/ /s/ L Jalbert	/7-30-2012
Name (print)	Z#	Signature	Date

Classification Review: ☐ N/A ☒ Unclassified ☐ UCNI ☐ Classified _____

Art Crawford	/080070	//s/ Art Crawford	/7-26-2012
Name (print)	Z#	Signature	Date

Working Copy / Information Only (circle one)
Initials / Date: _____/_____

This document fully satisfies the requirements of P300, Integrated Work Management, in order to systematically describe the work activity, the associated hazards, and the controls that **MUST** be employed to mitigate the risks.

HISTORY OF REVISIONS

Document Number	Issue Date	Action	Description
EP-WCRR-WO-DOP-0233, R.0	May 2007	New Document	
EP-WCRR-WO-DOP-0233, R.1	June 2007	Major Revision	Added requirement to move assay equipment outside of the WCG exclusion zone when not in use. Added precaution to prevent addition of items from multiple parent drums into a single daughter drum or Pipe Overpack Container. Added precaution for prohibited items – Class 1 oxidizers such as nitrates and reactive flammables.
EP-WCRR-WO-DOP-0233, R.2	June 2007	Major Revision	Added steps for dispositioning of potential pressurized containers.
EP-WCRR-WO-DOP-0233, R3	July 2007	Major Revision	Added steps for disposition of liquids. Added steps for actions to be taken in the event that any actual or suspected Class 1 oxidizers, flammables, or Pyrophoric materials/items are encountered.
EP-WCRR-WO-DOP-0233, R4	July 2007	Major Revision	Made use of glovebag to process Pu-238 inside the WCG optional based on input from the Facility ALARA Review Committee.
EP-WCRR-WO-DOP-0233, R5	July 2007	Major Revision	Added precaution for performance of diligent glove surveys and periodic glovebox wipe-downs when handling Pu-238. Deleted requirement for use of glovebag to process Pu-238 inside the WCG. Deleted Note in Sect. 8.12 which referenced use of partially filled POC's if all waste is from the same waste stream.
EP-WCRR-WO-DOP-0233, R.6	October 2007	Major Revision	Added precaution to prohibit remediation of following in the WCG 1) sealed containers > 4 liters that have a positive locking mechanism, 2) sealed un-vented containers > 4 liters with free liquids. Added action steps to take if containers are encountered. Added "allowed" container types that may be remediated. Added Attachment 3: Real Time Radiography Review for "Un-Allowed" Contents
EP-WCRR-WO-DOP-0233, R.7	October 2007	Minor Revision	Revised wording in Attachment 3 for review of RTR data.
EP-WCRR-WO-DOP-0233, R.8	October 2007	Major Revision	Deleted requirement for Real Time Radiography review & Attachment 3 (will be performed IAW EP-WCRR-WO-DOP-0211). Added section for processing high dose waste items (> 190 mrem/hr) of mixed material types. Added Attachment 3: Flowchart for Processing of High Dose Items of Mixed Material Types.
EP-WCRR-WO-DOP-0233, R.9	TBD	Major Revision	Incorporate the WCRR TSR page change to allow the opening of unvented 5- to 30-gal waste packages inside of the WCG.
EP-WCRR-WO-DOP-0233, R.10	January 2008	Major Revision	Delete requirement for SOM & CSE review of grounding sealed containers prior to venting.
EP-WCRR-WO-DOP-0233, R.11	March 2008	Minor Revision	Revised page 7 of 31 to include processing items that are heavy.

HISTORY OF REVISIONS (continued)

Document Number	Issue Date	Action	Description
EP-WCRR-WO-DOP-0233, R12	April 2009	Major	Revise procedure to incorporate the WCRRF TSR Revision 1 changes to the minimum staffing requirements which allows for the SOM to be on-call in the Operations Mode and now includes the requirements for the SOS (requires that the SOS be present at WCRRF during the Operations Mode and on-call in the Warm Standby Mode). This revision does not introduce any new hazards in this procedure. Update forms are required.
EP-WCRR-WO-DOP-0233, R13	May 11, 2009	Minor Revision	Revise procedure to provide guidance for the operator that the glovebox operations may continue after opening a < 5 gal unvented container without waiting 30 min., but the WCG electrical receptacles cannot be re-energized until 30 min. has elapsed since the unvented container was opened. Add additional instructions for creating loops within the document to address waste packages imbedded within other waste packages. This revision does not introduce any new hazards.
EP-WCRR-WO-DOP-0233, R14	June 12, 2009	Major Revision	Revise procedure to incorporate editorial corrections and to provide instructions for what to do when a shielded container is encountered containing radioactive material that exceeds the RWP limit. Add instructions to record the Waste Container Identification Number on the applicable attachments. This revision does not introduce any new hazards.
EP-WCRR-WO-DOP-0233, R15	November 24, 2009	Major Revision	Revise procedure to incorporate instructions for establishing, controlling, and the disposition of the Prohibited Item Collection Drum. Make editorial corrections as necessary. This revision does not introduce any new hazards.
EP-WCRR-WO-DOP-0233, R16	Approved for Training	Major Revision	Revise procedure to perform a pH test using pH strips and change “absorbent” to “approved absorbent” in Appendix 2. Make editorial corrections as necessary. This revision does not introduce any new hazards.
EP-WCRR-WO-DOP-0233, R17	February 18, 2010	Major Revision	Revise procedure to incorporate instructions for recording additional information for the prohibited items placed in the prohibited item collection drum. Incorporate process improvements (step sequences) and make editorial corrections as necessary. This revision does not introduce any new hazards. Incorporate the requirements of P300 and the hazards and controls from JHA 0008741 into this procedure.

HISTORY OF REVISIONS (continued)

Document Number	Issue Date	Action	Description
EP-WCRR-WO-DOP-0233, R18	March 22, 2010	Major Revision	Revise procedure to incorporate instructions for glovebox glove inspections and make editorial corrections as necessary. This revision does not introduce any new hazards.
EP-WCRR-WO-DOP-0233, R19	Training Only	Major Revision	Revise procedure to incorporate formality of operations into the procedure and incorporate the four parts of an integrated work document into the procedure in accordance with P300. Change title to WCRRF Waste Characterization Glovebox Operations. This revision is a total rewrite and revision bars have been omitted. This revision does not introduce any new hazards. This revision supersedes the following procedures: • EP-WCRR-WO-DOP-0223, Revision 4 • EP-WCRR-WO-DOP-0231, Revision 4 • EP-WCRR-WO-DOP-0232, Revision 8 • EP-WCRR-WO-DOP-0233, Revision 18
EP-WCRR-WO-DOP-0233, R20	October 27, 2010	Major Revision	Revise procedure to remove the requirements of SAC 5.10.1.2(1) in accordance with TSR Page Change 1.2, the fire blanket and MET-L-X is no longer a TSR requirement. The MET-L-X is being left as an administrative control. Make editorial corrections such as format changes. This revision does not introduce any new hazards.
EP-WCRR-WO-DOP-0233, R.21	November 2, 2010	Major Revision	Revise procedure to require that Building TA-50-69 is in the OPERATION mode for all activities in the procedure. Remove the Note in front of Step 4.3[7]. Add “approximately halfway” to Step 5.[9]. Change WARNING before Step 6.1[11] to indicate that there is no drum on the lift at this time. Revise Step 10.3[3] to remove requirement for testing a small portion of liquid and provide additional guidance for absorbing liquid. Make editorial corrections such as format changes. This revision does not introduce any new hazards.
EP-WCRR-WO-DOP-0233, R.22	November 8, 2010	Minor Revision	Revise procedure to modify hold tag note in Section 10.3 and modify step 10.3[2]. This revision does not introduce any new hazards.
EP-WCRR-WO-DOP-0233, R.23	February 8, 2011	Major Revision	Revise procedure to correct the TSR references and to allow the replacement of WCG bags in the WARM STANDBY mode. This revision does not introduce any new hazards.

HISTORY OF REVISIONS (continued)

Document Number	Issue Date	Action	Description
EP-WCRR-WO-DOP-0233, R.24	February 13, 2011	Minor Revision	Revise procedure to correct references and to provide clarification for the closure of a POC. Provide additional guidance for securing the horsetail during bag-in/bag-out operations. Make editorial corrections as necessary. This revision does not alter the purpose, scope, or intent of the original document. This revision does not introduce any new hazards.
EP-WCRR-WO-DOP-0233, R.25	April 13, 2011	Minor Revision	Revise procedure to incorporate process improvements. Incorporate instructions as to what to do if the parent drum closure ring cannot be reinstalled before lowering the parent drum. Make editorial corrections as necessary. This revision does not alter the purpose, scope, or intent of the original document. This revision does not introduce any new hazards.
EP-WCRR-WO-DOP-0233, R.26	April 18, 2011	Minor Revision	Revise procedure to provide instructions for loosening the nut on the closure ring bolt before lifting the waste drum up to the WCG. Make editorial corrections as necessary. This revision does not alter the purpose, scope, or intent of the original document. This revision does not introduce any new hazards.
EP-WCRR-WO-DOP-0233, R.27	June 9, 2011	Minor Revision	Revise procedure to provide instructions for inspecting drum lift hinge pins and attaching hinge pin retaining clips in Section 6.2; and add note that the retaining clips must be ML-2. Update equipment list to reflect ML-2 retaining clip. Make editorial corrections as necessary. This revision does not alter the purpose, scope, or intent of the original document. This revision does not introduce any new hazards.
EP-WCRR-WO-DOP-0233, R.28	August 10, 2011	Major Revision	This procedure is being revised to allow for bagging a POC onto the WCG, to correct the actions to be taken if a drum is stuck on the WCG drum lift, and to allow for processing waste at greater than 10 rem/hr. This last issue makes the activity a High/Complex Hazard Activity. The HA has been modified to allowed for the procedure to be performed as a Moderate or High/Complex Hazard Activity.
EP-WCRR-WO-DOP-0233, R.29	August 12, 2011	Minor Revision	Revise procedure to correct the high/complex activity hazard classification step in Attachment 1 to "> 10 rem/hr." This revision does not introduce any new hazards.

HISTORY OF REVISIONS (continued)

Document Number	Issue Date	Action	Description
EP-WCRR-WO-DOP-0233, Rev 29 IPC-1	August 29, 2011	IPC-1	Revised to change word in step 5.[11] from below to above and a caution and additional language to step 5[12] added ENSURE banding material is not placed around the hoop.
EP-WCRR-WO-DOP-0233, R.30	Training Only	Minor Revision	Revised to update requirements from page change 2.0 and 2.1 associated with STATIONARY Fire Watch in precautions, limitations and associated. Steps of the procedure when inventory is greater than >300 PE Ci. A STATIONARY FIRE WATCH is required in OPERATIONS and WARM STANDBY MODE when the WCG contains INVENTORY > 300 PE-Ci of EQUIVALENT COMBUSTIBLE WASTE. (SAC 5.10.1.7.1) and WCG SHALL be equipped with three 1-litre containers of carbon spheroids or MetL-X when the glovebox INVENTORY is >300 PE-Ci of EQUIVALENT COMBUSTIBLE WASTE (SAC 5.10.1.7.2), and WCG operators SHALL be trained in glovebox fire suppression techniques in order to extinguish small, early developing fires when processing INVENTORY > 300 PE-Ci of EQUIVALENT COMBUSTIBLE WASTE, in coordination with the STATIONARY FIRE WATCH, . This revision has not introduced any additional changes to the JHA.
EP-WCRR-WO-DOP-0233, R.31	Training Only	Minor Revision	Revise procedure to incorporate WCRRF TSR 2.0/2.1 IVR issues. Make editorial corrections as necessary. Revision does not introduce any additional hazards.
EP-WCRR-WO-DOP-0233, R.32	January 31, 2012	Minor Revision	Revise steps referencing 300 PE-Ci to add “equivalent combustible” after PE-Ci. Revision does not introduce any additional hazards.
EP-WCRR-WO-DOP-0233, R.33	April 5, 2012	Minor Revision	Revise procedure to incorporate instructions for the introduction of supplies into the WCG, for leaving a parent drum attached to the WCG overnight, and modify actions for a drum lift deficiency. Make editorial corrections such as correcting step numbering. Revision does not introduce any additional hazards.
EP-WCRR-WO-DOP-0233, R.34	May 24, 2012	Minor Revision	Revise procedure to provide guidance on simulating waste in a drum when obtaining radiation surveys and add the use of the Trolley Rail Clamp. Make editorial corrections such as correcting references. Revision does not introduce any additional hazards.

HISTORY OF REVISIONS (continued)

Document Number	Issue Date	Action	Description
EP-WCRR-WO-DOP-0233, R.35	July 2, 2012	Major	Revised to separate verification steps from actual steps in Section 10.1 [10][D] and 10.1[10][E], 10.1[11][C], and reword Step 10.1[11][O] to read If directed by Supervision as a pre condition and Attachment 4 & 5 . Added steps for instructions for Administrative Lock Log, key, and lock Section 10. Added Steps to Section 4.1, 6.2, and 7.1 for using the Trolley Clamp Device. No additional hazards were identified during this revision. Rev bars in left column display locations of changes to the procedure.
EP-WCRR-WO-DOP-0233, R.36	August 1, 2012	Major Revision	Revised procedure to incorporate EP-SO-1708, and add steps to clarify the amount of absorbent needed when processing Nitrate Salts. Also added Appendix 6 Administrative Control Lock Log Sheet. No additional hazards were identified during this revision. Revision bars in the left column display location of changes in the procedure.

TABLE OF CONTENTS

Section Page

TITLE PAGE 1
REVISION HISTORY 2
TABLE OF CONTENTS 8

1. PURPOSE 10

2. SCOPE 10

3. PRECAUTIONS AND LIMITATIONS 11

4. PREREQUISITES ACTIONS 18
4.1 Planning and Coordination 18
4.2 Materials and Equipment 20
4.2.1 Special Tools and Equipment 20
4.2.2 Consumables 20
4.2.3 Measurement and Test Equipment (M&TE) 21
4.3 Field Preparation 21

5. PERFORMANCE—PARENT WASTE CONTAINER PREPARATION 28

6. PERFORMANCE—WCG PARENT DRUM LOADING/UNLOADING 31
6.1 WCG Drum Lift Daily Inspection 31
6.2 Parent Drum Loading 35
6.3 Parent Drum Unloading 39

7. PERFORMANCE—WCG PARENT DRUM BAG-ON/BAG-OFF OPERATIONS 42
7.1 Parent Drum Bag On 42
7.2 Parent Drum Bag Off 44

8. PERFORMANCE—WCG DAUGHTER DRUM, BAGPORT, OR GLOVEPORT BAG-ON/BAG-OFF OPERATIONS 49
8.1 Bag On Daughter Drum, Bagport, or Gloveport 49
8.2 Bag Off Daughter Drum 51

9. PERFORMANCE—ITEM BAG-IN/BAG-OUT OPERATIONS 55
9.1 WCG Item Bag-Out 55
9.2 WCG Introductory Port 59

10. PERFORMANCE—WCG WASTE PROCESSING 61
10.1 WCG Waste Processing Preparation 61
10.2 Waste Material Greater Than 190 mrem/hr 72
10.3 Prohibited Item Disposition 76
10.4 Waste Splitting Activities 82
10.5 Repackaging Activities 84
10.6 Processing Nitrate Salt Drums 85

11. POST-PERFORMANCE ACTIVITY 86
11.1 Disposition 86

TABLE OF CONTENTS (continued)

Section Page

11.2 Records Processing 88

12. REFERENCES 89

Appendices
Appendix 1, Waste Drum Critical Lift Plan 91
Appendix 2, WCRRF Allowable Container Types For Remediation 94
Appendix 3, Example Preoperational Inspection Record For Overhead Cranes and Hoists 95
Appendix 4, Volumes of Cylindrical Inner Containers Near 4 Liters 96
Appendix 5, Flowchart For Processing of High Dose Items of Mixed Material Types 97
Appendix 6, Administrative Control Lock Log Sheet 98

Attachments
Attachment 1, WCRRF WCG Waste Processing Data Sheet 99
Attachment 2, WCRRF WCG Critical Lift Plan Concurrence Sheet 103
Attachment 3, WCRRF WCG Drum Lift Inspection Data Sheet 104
Attachment 4, WCRRF WCG Breaching (Opening) Unvented, Sealed Waste Packages Checklist 106
Attachment 5, WCRRF WCG Breaching (Opening) Metal 5- to 30 gal Unvented6 Sealed Waste Package Surveillance 107
Attachment 6, WCRRF Prohibited Item Collection Drum Data Sheet 108

1. PURPOSE

This procedure provides detailed instructions for Waste Characterization Glovebox (WCG) operations at the Waste Characterization, Reduction, and Repacking Facility (WCRRF).

TRU waste that has been identified as not satisfying Waste Isolation Pilot Plant (WIPP) acceptance criteria must be remediated to satisfy the WIPP criteria. Prohibited items must be removed or corrected and the container must also satisfy limits on the amount of radioactive material in each container. Containers that fail to satisfy the WIPP criteria maybe sent to WCRRF to be safely remediated in the WCG.

2. SCOPE

This procedure applies to personnel who perform WCG operations.

The Performance sections of this procedure may be performed independently or in conjunction with other Performance sections.

As used within this procedure a parent waste container is the originating waste container received at WCRRF for processing and a daughter drum is the resulting waste container packaged with the originating waste container waste. There may be multiple daughter drums.

This procedure addresses the following WCG activities:

- Preparation of parent waste containers
- Daughter drum, bagport, and gloveport bag-on/bag-off operations
- Parent drum bag-on/bag-off operations
- Parent drum WCG loading/unloading operations
- WCG waste processing

This procedure addresses the following activities for the complete processing and disposition of waste material within the WCG:

- Visual Examination (VE)
- Prohibited Item Dispositioning (PID)
- Pipe Overpack Component (POC)
- Waste Splitting
- Repackaging

EP-DIV-AP-0108, LTP Waste Record (TWSR/WDR) Initiation and Label Creation, is performed concurrently with this procedure in order to track waste containers in the Waste Management Database and to generate waste container labels.

2. SCOPE (continued)

The performance of this procedure may be classified as a Moderate or High/Complex Hazard activity based on the potential radiation levels encountered during the performance of this activity. To accommodate the two hazard classifications this document requires the identification of the potential radiation levels that may be encountered and documentation of the hazard classification level (moderate or high/complex).

3. PRECAUTIONS AND LIMITATIONS

- This procedure contains special procedure step markings. **($)** is used to identify steps that implement WCRRF Safety Basis requirements. Steps containing **($)** may not be changed without Engineering approval to ensure the safety envelope is maintained.

- To comply with the intent of the As Low As Reasonably Achievable (ALARA) Program, all personnel **SHALL** apply the principles of time, distance, and shielding when working with radiological materials.

- Avoid the open area of a shielded container to prevent an increased exposure to radiation which could result from the streaming of radiation while accessing shielded containers during the processing of waste.

- Activities, items, and containers **SHALL** satisfy approved design specifications, regulatory requirements, process-specific parameters, and procedural requirements. Activities, items, or containers that do not conform to the approved specifications and requirements are considered nonconforming and Nonconformance Reports (NCRs) **SHALL** be generated in accordance with P330-6, Nonconformance Reporting, as required.

- When a worker observes an unsafe condition or act that may pose an imminent danger or other safety concern/hazard, the worker has the authority and responsibility to inform the worker engaged in the work and request that the work activity be paused and/or stopped based on the risk posed to the individual, the employees, the environment, or the facility in accordance with P101-18, Procedure for Pause/Stop Work.

- Supervision **SHALL** be notified if this procedure cannot be performed as written.

- Not Applicable (N/A) is documented on the attachments during the performance of this procedure indicating information that is not required to be recorded.

3. PRECAUTIONS AND LIMITATIONS (continued)

- **($)** TRU WASTE CONTAINERS **SHALL** not be stacked and **SHALL** not be lifted higher than 4 ft, excluding the WCG drum lift and lifts during loading or unloading from delivery trucks. (SAC 5.10.2.2)

- Drums **SHALL** not be lifted greater than 4 ft during any operation involved in preparing the drum.

- This procedure **SHALL** not be used to prepare DEGRADED/LOSS OF INTEGRITY drums. DEGRADED/LOSS OF INTEGRITY drums are prepared in accordance with EP-WCRR-WO-DOP-0236, WCRRF Loading/Unloading SWB or 85-Gal Drum.

- **($)** Drums **SHALL** be verified to weigh less than 630 lb before lifting the drums using the WCG drum lift. (SR 4.5.1) Administratively drum weights **SHALL** be limited to 624 lb in order to take into consideration the uncertainties of the instrumentation.

- This procedure is to be performed only by Waste Handling Operators as qualified Glovebox Operators.

- To avoid pinch points, the drum lift pendant operator **SHALL** announce operation of the drum lift before commencing raising/lowering of a drum and that all personnel **SHALL** stand clear and to the side of drum movement.

- **($)** The facility must be in the OPERATION MODE to process waste in the WCG. (TSR 1.2)

- The approximate weight of load should be known before moving and the appropriate capacity lift selected. Be aware of uneven loading and shifts in the load when moving.

- Drums can have sharp edges and create pinch points when being moved – use appropriate gloves when handling drums.

- Use proper lifting techniques and buddy system and wear steel toed shoes when performing heavy lifting or movements and comply with the requirements of EP-DIV-Policy-20057, EWMO Health and Safety Policy-Manual Movement

3. PRECAUTIONS AND LIMITATIONS (continued)

- **($)** No flammable liquids or gases, and no combustible liquids with NFPA Flammability Rating greater than 1 **SHALL** be stored or used within BUILDING TA-50-69 when INVENTORY is in BUILDING TA-50-69 except three size 1 cylinders of P-10 gas and flammable or combustible liquids found in the TRU WASTE CONTAINER. (LCO 3.4.2)
- Portable high-efficiency particulate air (HEPA) filter ventilation equipment **SHALL** be removed from the WCG Exclusion Area after operations are complete. This limitation supports LCO 3.4.2.
- Due to the unique characteristics of Pu-238, diligent glove surveys should be performed before and after handling Pu-238, as well as periodic glovebox wipe downs.
- All operators involved in the execution of this procedure must be qualified as Waste Handling Operators.
- Fire Patrol or Stationary Fire Watch **SHALL** be established in accordance with the applicable Technical Safety Requirements and identified in EP-DIV-AP-0120, EWMO Watchbill Administration.
- STATIONARY FIRE WATCH **SHALL** be performed in accordance with EP-DIV-AP-0120, EWMO Watchbill Administration.
- **($)** WCG **SHALL** be equipped with three 1-liter containers of carbon spheroids or Met-L-X when the glovebox INVENTORY is > 300 PE-Ci of EQUIVALENT COMBUSTIBLE WASTE. (SAC 5.10.1.7.1)
- An administrative control will ensure that the WCG will be equipped with three 1-liter containers of carbon spheroids or MET-L-X to prevent the potential spread of a fire in the glovebox regardless of the inventory quantity in the WCG.
- **($)** A STATIONARY FIRE WATCH **SHALL** be in place when the WCG contains INVENTORY > 300 PE-Ci of EQUIVALENT COMBUSTIBLE WASTE, in order to extinguish small, early developing fires, in coordination with WCG operators. (SAC 5.10.1.7.2)
- When processing a parent drum if an item is encountered to be too large or heavy to handle supervision is to be notified.

3. PRECAUTIONS AND LIMITATIONS (continued)

- Use caution when performing glovebox operations. Operations may involve handling of sharp objects, applying force to objects with tools, lifting heavy materials or items.
  - The glovebox gloves **SHALL** have cut resistant (e.g., leather, or HexArmor®) gloves over them during glovebox operations when handling sharp objects or opening/closing waste containers.
  - Use the two-man rule when lifting heavy materials or items.
  - Cut or apply force away from hands and arms.
  - Use approved tools and techniques.
  - Tools **SHALL** be in good working order.

- **($)** WCG operators **SHALL** be trained in glovebox fire suppression techniques in order to extinguish small, early developing fires when processing INVENTORY > 300 PE-Ci of EQUIVALENT COMBUSTIBLE WASTE, in coordination with the STATIONARY FIRE WATCH. (SAC 5.10.1.7.3)

- Unvented, sealed waste packages are those waste packages that have a positive locking mechanism, such as a gasket with drum closure ring or a screw top lid (with no other openings) to seal the lid to the waste package.

- **($)** When breaching (opening) unvented, sealed waste packages in the WCG the following requirements **SHALL** be satisfied:
  - Non-sparking tools and processes **SHALL** be used, (SAC 5.10.1.6.1)
  - Electrical receptacles within the WCG **SHALL** be de-energized before opening the waste package and remain de-energized for a minimum of 30 minutes after removing the lid and lid restraining device. (SAC 5.10.1.6.2) and (SAC 5.10.1.6.3)

- **($)** Before breaching (opening)an unvented, sealed 5- to 30-gal waste packages in the WCG a lid restraining device **SHALL** be inspected for degradation and properly installed (SAC 5.10.1.5.1), and WCG operations **SHALL** be ceased for a minimum of 30 minutes following the removal of the waste package lid and lid restraining device (breaching). (SAC 5.10.1.5.2)

- **($)** When processing a positively sealed 30- to 5-gallon metal WASTE PACKAGE in the WCG, the parent 55-gallon drum bagged-on to the WCG and metal WASTE PACKAGE **SHALL** be grounded when the metal WASTE PACKAGE is breached and for 30 minutes after the removal of the lid and lid restraining device. (LCO 3.6)

3. PRECAUTIONS AND LIMITATIONS (continued)

- Personnel **SHALL** be aware of heat and cold stress indicators and observe co-workers in accordance with the Thermal Stress Awareness Course.

- Personnel protective equipment (PPE) **SHALL** be worn (e.g., safety shoes, cut resistance gloves, and respirator) as required by Industrial Hygiene/Health and Safety and in accordance with the RWP.

- Sharp objects **SHALL** be covered and properly stored when not in use. Wear cut/puncture resistant glove (e.g., leather) and cut away from your body when in use.

- All sharp objects that are introduced inside the glovebox **SHALL** be properly identified and stored when not in use in accordance with EP-DIV-AP-20047, LTP Glovebox/Glovebag and Glove Safety Program.

- Routine inspection of glovebox gloves **SHALL** be conducted in accordance with EP-DIV-AP-20047 and this procedure.

- To prevent personnel injury due to ergonomic, pinch point, and other general hazards, personnel **SHALL** maintain an awareness of the working environment and task activities and use good work practices and techniques, skill of craft, good ergonomic practices, and minimize time in awkward/uncomfortable positions.

- Spark-producing and non-sparking tools **SHALL** be distinguished from each other. Spark-producing tools are to be set aside in the WCG, and not handled, when non-sparking tools are required.

- A cordless drill may be used to open a parent drum. This will minimize overextending glovebox gloves and potential damage (i.e., tearing a glove) when using a ratchet. The cordless drill is considered to be a spark-producing tool and is to be placed aside in the WCG, and not handled, when non-sparking tools are required.

- Charging of portable electric equipment in the WCG **SHALL** not be performed when there is INVENTORY in the WCG.

- Charging of battery operated equipment external to the WCG **SHALL** not be charged within the WCG exclusion zone.

3. PRECAUTIONS AND LIMITATIONS (continued)

- If receptacle inside the WCG or in the WCG exclusion zone is used, the equipment being plugged in must be in the OFF position before inserting or removing the plug at the receptacle.

- Prohibited items are documented by two distinct processes. One is through the use of the fast scan process, indicated by the GREEN hold tag. The second is through the use of CCP's NCR, indicated by a RED hold tag.

- If during a Green Drum Campaign a suspected special shape is identified while performing VE, Repackaging, or PID, refer to EP-WCRR-RM-AOP-0208, Special Shapes on how to handle the suspected special shape.

- Waste placed into daughter drums or Pipe Overpack Containers (POCs) must be from a single parent drum.

- Based on waste acceptance criteria, Class 1 oxidizers such as nitrates, and reactive flammables such as lithium metal or hydrides are prohibited items in the WCRRF.

- Liquids removed from a parent drum must be remediated (absorbed) inside of a new container.

- Storage of drum lid restraints when <u>not</u> in use **SHALL** be such that the drum lid restraints are protected from degradation (e.g., daughter drum).

- Avoid slips, trips, and falls by wearing the proper footwear with slip-resistant soles and using handrails when using stairs. Use established pathways when available and avoid walking on uneven or unstable surfaces.

- Glass sample vials may contain residual granular plutonium hydride which can generate sparks when subjected to mechanical agitation. To reduce the possibility of breaking a glass sample vial and the generation of sparks, glass sample vials **SHALL** be handled with care and void volume reduction activities **SHALL** be performed without excessive force. (EP-DIV-REPORT-09)

- The fire protection system sprinkler head located in the WCG is a water source that if activated (inadvertently or as a result of an actual WCG fire) would result in the spread of radiological contamination. Contact with the sprinkler head during waste processing is to be avoided in order to reduce the possibility of the inadvertent initiation of water flow into the WCG.

3. PRECAUTIONS AND LIMITATIONS (continued)

- **($)** No combustibles **SHALL** be stored within the waste characterization glovebox (WCG) exclusion zone. The WCG exclusion zone is 10 ft around the WCG, up to GBE, or up to the walls of Room 102, whichever is less. (LCO 3.4)

  The following are excluded from the above limitations of LCO 3.4
  - INVENTORY that is in the WCG or staged in BUILDING TA-50-69.
  - Combustible components of support equipment (e.g., wiring insulation, operator platforms and rubber mats) within the WCG Exclusion Zone and associated with WCG processing.
  - Drum liners or wrapping around DEGRADED/LOSS OF INTEGRITY drums that are inside BUILDING TA-50-69 being loaded and working amounts of material necessary to complete bag on/off operations such as tape, cheese cloth, and extra operator gloves.
  - Hydraulic fluid within the engineered, closed-loop, containment systems.
  - Combustible components associated with a forklift.

4. PREREQUISITES ACTIONS

NOTE *The listed prerequisite actions may be completed in any order.*

4.1 Planning and Coordination

Supervisor or designee

[1] **ENSURE** that this procedure is the latest revision, and **IDENTIFY** this document as Working Copy or Information Only on the Title Page.

[2] **ENSURE** that the performance of this procedure has been scheduled on the WCRRF schedule.

[3] **ENSURE** that a Radiological Work Permit (RWP) is obtained in accordance with P121, Radiation Protection, as applicable.

[4] **ENSURE** that a pre-job briefing is conducted for all personnel involved in the performance of this procedure, in accordance with EP-DIV-AP-0112, EWMO Pre-Job Briefings, and that the pre-job briefing included weather conditions, communication requirements, hazards/controls and emergency response actions.

[5] **ENSURE** that, as a minimum, the following personnel trained in the use of this procedure are available for performance of this procedure, as required:

- Two Radiological Control Technician (RCT)
- Four Waste Handling Technician
- One Supervisor (e.g., Shift Operations Supervisor or Person-In-Charge)
- One Central Characterization Project (CCP) representative [Visual Examination (VE) only]
- **($)** STATIONARY FIRE WATCH (greater than 300 PE-Ci equivalent combustible waste only) (SAC 5.10.1.7.2)

4.1 Planning and Coordination (continued)

[6] **IF** performing Section 10, WCG Waste Processing,
THEN:

[A] **ENSURE** that the waste containers to be processed have been evaluated in accordance with EP-DIV-AP-0107, WDP TRU Waste Container Management Operations, and that a copy of the WDP Waste Remediation Safety Evaluation Data Sheet (EP-DIV-AP-0107 Attachment 1) has been obtained for each waste container to be processed.

[B] **INITIATE** a copy of Attachment 1, WCRRF WCG Waste Processing Data Sheet for each waste container to be processed, and **DOCUMENT** the following information:

- Parent Waste Container Number (record on each page of Attachment 1)
- Processing activity to be performed in accordance with EP-DIV-AP-0107 (i.e., > 190 mrem/hr, PID, Split, or Repack)
- Prohibited Items, if present
- Parent waste container RCRA Designations

[C] **ATTACH** a copy of the WDP Waste Remediation Safety Evaluation Data Sheet (EP-DIV-AP-0107 Attachment 1) to Attachment 1.

[7] **DETERMINE** the hazard classification of the activity to be performed using the following Anticipated Extremity Radiation Dose Rate criteria, and **CHECK** (√) the applicable box on Attachment 1:

- Moderate Hazard - ≤ 10 rem/hr
- High/Complex Hazard - > 10 rem/hr

[8] **OBTAIN** a blank Administrative Control Lock Log Sheet form 10.4 of EP-DIV-AP-0117, lock, and key from the WCRRF Operations Center. (e.g., See Appendix 6, Administrative Control Lock Log Sheet)

4.2 Materials and Equipment

4.2.1 Special Tools and Equipment

NOTE *The list of special tools and equipment is not an all inclusive list and additional tools and equipment may be used as necessary.*

Waste Handling Technician or Supervision

[1] **ENSURE** that the following special tools and equipment are available, as required:

- Safety glasses with side shields
- Permanent marker
- Cut resistant (e.g., HexArmor™, leather, or leather palm mechanics) gloves
- Drum dolly
- Two-wheel dolly
- Portable HEPA-filter exhaust system
- Cutting tool (e.g., utility knife or PVC cutter)
- WCG metal bucket
- Tools for separating and processing waste
- Non-sparking tools for separating and processing waste
- Banding tool
- ML-2 drum lift hinge pin retaining clips (e.g., E-clips)
- Removable lead glass windows
- Lead blankets

4.2.2 Consumables

NOTE *The list of consumables is not an all inclusive list and additional consumables may be used as necessary.*

Waste Handling Technician or Supervision

[1] **ENSURE** that the following consumables are available, as required:

- Bag-off bags (filtered or unfiltered)
- Tape (duct or vinyl)
- Binding ties
- Nitrile gloves
- Plastic waste bags
- Drum labels
- Chemwipes or equivalent
- Wire rope inspection cloth (e.g., cheese cloth)

4.2.2 Consumables (continued)

- Fantastik or equivalent
- Banding material
- Banding buckles
- Kitty Litter/Zeolite® absorbent
- 3 Liters Carbon Spheroids or MET-L-X
- Litmus paper
- Lead or lead equivalent WCG gloves
- Velcro®

4.2.3 Measurement and Test Equipment (M&TE)

Waste Handling Technician or Supervision

[1] **ENSURE** that the following measuring and test equipment are available, as required:
- Platform scale
- WCG scale

4.3 Field Preparation

Waste Handling Technician or Supervision

[1] **($) IF** performing any section except Section 8.1, Bag On Daughter Drum, Bagport, or Gloveport, without bagging in waste material,
THEN ENSURE that Building TA-50-69 is in the OPERATION MODE in accordance with EP-WCRR-FO-DOP-0201, WCRRF and Building TA-50-69 TSR Mode Change, and **CHECK** (√) OPERATIONS on Attachment 1, WCRRF WCG Waste Processing Data Sheet. (TSR 1.2)

[2] **($) IF** performing Section 8.1,
AND waste material is **NOT** being introduced into the WCG,
THEN ENSURE that Building TA-50-69 is in the OPERATION or WARM STANDBY MODE in accordance with EP-WCRR-FO-DOP-0201, and **CHECK** (√) WARM STANDBY on Attachment 1. (TSR 1.2)

[3] **ENSURE** that the WCRRF Operations Center has authorized the performance of this procedure.

4.3 Field Preparation (continued)

[4] **IF** performing one of the following sections:
Section 5, Parent Waste Container Preparation,
Section 6, WCG Parent Drum Loading/Unloading,
Section 10, WCG Waste Processing,
THEN:

[A] **ENSURE** that the weekly Platform Scale calibration verification has been performed in accordance with EP-WCRR-WO-DOP-0239, Verifying WCRRF Scales.

[B] **RECORD** the platform scale serial number and calibration due date on Attachment 1.

[C] **IF** the platform scale exceeds the calibration due date,
THEN NOTIFY the WCRRF Operations Center of the discrepancy, and
REQUEST the applicable actions.

[5] **IF** performing Section 10,
THEN:

[A] **ENSURE** that preprinted Item ID Number labels and PCB Item Number labels are obtained from the Waste Management Coordinator.

[B] **($) VERIFY** that WCG contains three 1-Liter containers of carbon spheroids or MET-L-X, and **CHECK** (√) YES or NO on Attachment 1. (SAC 5.10.1.7.1)

[C] **ENSURE** that the required number of daughter drums have been prepared in accordance with EP-WCRR-WO-DOP-0221, Preparing and Closing 55-gal Daughter Drum Assemblies.

[D] **REVIEW** Appendix 2, WCRRF Allowable Container Types For Remediation.

[E] **ENSURE** that a prohibited item collection drum is available.

[6] **($) IF** performing Section 10,
AND the parent container TRU-waste material inventory value is greater than 300 PE-Ci equivalent combustible waste,
THEN ENSURE a STATIONARY FIRE WATCH has been established, and
DOCUMENT (Initial and Date) on Attachment 1. (SAC 5.10.1.7.2)

4.3 Field Preparation (continued)

NOTE *The Technical Safety Requirements for WCRRF specify that a critical lift plan is required for lifts and forklift movements involving DEGRADED or LOSS OF INTEGRITY drums. Additionally a critical lift plan is required in accordance with the requirements of P101-25, Cranes, Hoists, Lifting Devices, and Rigging Equipment, such as when the weight of the parent drum is greater than 75% of the WCG drum lift rated capacity (624 lb x .75 = 468 lb).*

[7] **IF** performing Section 6,
THEN:

[A] **DETERMINE** whether the parent drum is a degraded or loss of integrity drum, or whether the parent drum weight is greater than 468 lb but less than or equal to 624 lb, and **CHECK** (√) YES or NO on Attachment 1.

NOTE *The Person-in-Charge (PIC) appointed for the safe handling of critical loads and for the safe handling of non-critical items in, around, or above spaces in which critical items are located **SHALL** be trained as a qualified crane operator and rigger.*

[B] **($) IF** the parent drum is a degraded or loss of integrity drum, (AC 5.10.3.1)
OR the parent drum weight is greater than 468 lb but less than or equal to 624 lb,
THEN:

[a] **IDENTIFY** and **RECORD** the name of the person who will serve as the Qualified Crane Operator and Rigger PIC for lifting and forklift movements of degraded or loss of integrity drums on Attachment 2, WCRRF WCG Critical Lift Plan Concurrence Sheet.

[b] **ENSURE** that the Qualified Crane Operator and Rigger PIC performs a pre-job briefing that includes a review of Appendix 1, Waste Drum Critical Lift Plan, and **DOCUMENT** the review on Attachment 2.

4.3 Field Preparation (continued)

WARNING

1. **Performance of a pre-operational inspection of the WCG drum lift (Form 1489), SHALL ensure that the entire length of the drum lift cable is inspected. This will require that the drum lift be exercised from the full up to the full down positions.**

2. **The drum lift pendant operator is to announce operation of the lift before raising or lowering the drum and all personnel are to stand clear and to the side of drum movement in order to prevent personnel injuries.**

NOTE *The inspection criteria identified as N/A on Appendix 3, Example Preoperational Inspection record for Overhead Cranes and Hoists, are not required to be performed.*

[C] **IF** performing Section 6 for the first time for the day,
THEN PERFORM a pre-operational inspection of the WCG drum lift components in accordance with P101-25 by completing the applicable sections of Form 1489.

[8] **IF** performing WCG operations (e.g., Section 10, WCG Waste Processing),
THEN:

[A] **DETERMINE** whether the WCG glove change due date marked on each WCG gloves has been exceeded.

[B] **IF** the WCG glove change due date marked on the WCG glove has been exceeded,
OR a WCG glove or bag-in/bag-out bag fails the inspection,
THEN:

[a] **STOP** operations.

[b] **IDENTIFY** the WCG glove or bag-in/bag-out bag as out-of-service.

[c] **NOTIFY** supervision and an RCT for the applicable actions in accordance with EP-DIV-AP-20047.

4.3 Field Preparation (continued)

NOTE *WCG gloves with a glove change due date that has been exceeded are not required to be inspected in accordance with the following step.*

[C] **INSPECT** the internal and external surfaces of each WCG glove and bag-in/bag-out bag for the following:

- Layer separations
- Cuts
- Natural degradation
- Cracks
- Stiffness
- Punctures
- Splits
- Obvious physical signs of deterioration
- Discoloration
- Surface deposits/debris
- Radiological contamination (internal only)
- Exposed color of the lead liner, if present

[D] **CHECK** (√) SAT or UNSAT on Attachment 1, and **DOCUMENT** the completion of the WCG glove inspection by signing and dating on Attachment 1.

[9] **ENSURE** that glovebox inspections have been completed in accordance with EP-DIV-AP-20047.

[10] **IF** Section 10.4, Waste Splitting Activities, is to be performed,
THEN ENSURE that Low-Level Waste Characterization personnel are available, as necessary.

[11] **IF** this procedure is being performed as a High/Complex Hazard activity as determined in Section 4.1, Planning and Coordination,
THEN:

[A] **ENSURE** that the temporary lead glass windows have been attached (e.g., Velcro®) to the inside of the applicable WCG windows.

[B] **ENSURE** that lead or lead equivalent gloves have been installed on the WCG gloveports.

[C] **ENSURE** that lead blankets have been placed along the bottom of the WCG.

4.3 Field Preparation (continued)

NOTE *The following step may be performed out of sequence and may be performed in Building TA-50-37 (Artic).*

[12] **IF** a POC is to be used,
AND the POC is to be bagged onto the WCG,
THEN:

[A] **OBTAIN** a POC bag-on bag.

[B] **APPLY** vinyl tape to the POC bag-on bag, with a smear pad centered on the tape, over the filter.

[C] **INFLATE** the POC bag-on bag with air from a compressed air source.

[D] **INSPECT** the POC bag-on bag for damage, cuts, or leaks by looking, listening, and feeling.

[E] **STRETCH** the POC bag-on bag's bungee cord, and **INSPECT** the bungee cord for cuts or damage.

[F] **IF** the POC bag-on bag or bungee cord fails the inspection,
THEN:

[a] **IDENTIFY** (e.g., tag or mark) the failed item indicating that item is defective.

[b] **SEGREGATE** the failed item in order to prevent the item from being used.

NOTE 1 *A Quality Assurance (QA) representative may be contacted for assistance with the NCR process.*

NOTE 2 *The NCR may be initiated at an operationally convenient time.*

[c] **ENSURE** that an NCR is initiated in accordance with P330-6, Nonconformance Reporting, as required.

[d] **REPLACE** the defective item.

[e] **GO** to Step 4.3[12][A].

4.3 Field Preparation (continued)

NOTE *The following step may be performed out of sequence to allow for the bulk inspection of liners in order to improve operational efficiencies.*

[G] **OBTAIN** and **VISUALLY INSPECT** a POC plastic/cardboard liner ensuring the exterior surfaces are smooth.

[H] **IF** POC plastic/cardboard liner fails the inspection,
THEN:

[a] **IDENTIFY** (e.g., tag or mark) the POC plastic/cardboard liner indicating that the POC plastic/cardboard liner is defective.

[b] **SEGREGATE** the POC plastic/cardboard liner in order to prevent the item from being used.

NOTE 1 *A Quality Assurance (QA) representative may be contacted for assistance with the NCR process.*

NOTE 2 *The NCR may be initiated at an operationally convenient time.*

[c] **ENSURE** that an NCR is initiated in accordance with P330-6, Nonconformance Reporting, as required.

[d] **REPLACE** the POC plastic/cardboard liner.

[e] **GO** to Step 4.3[12][G].

[I] **PLACE** the POC plastic/cardboard liner into the POC bag-on bag.

[J] **PLACE** the POC plastic/cardboard liner and bag into the POC pipe component.

[K] **ENSURE** that excess POC bag-on bag is placed inside of the POC pipe component.

[L] **PLACE** the POC pipe component lid on the POC pipe component and **TIGHTEN** the lid sufficiently to hold the lid on the POC pipe component.

[M] **PLACE** the POC drum lid on the POC drum and **TIGHTEN** the closure ring bolt sufficiently to hold the drum lid in place.

5. PERFORMANCE—PARENT WASTE CONTAINER PREPARATION

This section is a stand-alone section and may be performed independently of or in conjunction with other Performance sections.

NOTE *Radiological surveys may be performed as determined necessary [e.g., by an RP representative (e.g., RCT)] anytime during the performance of this procedure.*

Waste Handling Technician

[1] **ENSURE** that all applicable prerequisite actions have been completed.

NOTE *Steps 5.[2] through 5.[4] may be performed in Building TA-50-37 (Artic).*

[2] **OBTAIN** an unfiltered bag-off bag or a filtered bag-off bag, and **TAPE OVER** the inside and outside filter openings of a filtered bag-off bag, as applicable.

CAUTION

Care should be exercised when not to over inflate the filtered bag. Apply only enough air to inspect for leaks. (pins holes, leakage around filter attachment points.). Failure to comply with this caution could lead to overstressing the filter and possible pre-damage to the filtered bag.

[3] **INFLATE** the filtered or no filtered bagout bag carefully and slowly while sealing the bag (i.e. securing opening with hand).

[4] **INSPECT** the bag-off bag for damage or cuts examining by sight, sound, and feel.

[5] **IF** the bag-off bag does **NOT** hold the air,
THEN:

[A] **IDENTIFY** (e.g., tag or mark) the bag-off bag indicating that the bag-off bag is defective.

[B] **SEGREGATE** the bag-off bag in order to prevent the item from being used.

NOTE *The NCR may be initiated at a time that is operationally convenient.*

[C] **ENSURE** that an NCR is initiated in accordance with P330-6, Nonconformance Reporting.

[D] **GO** to Step 5.[2].

5. PERFORMANCE—PARENT WASTE CONTAINER PREPARATION (continued)

[6] **TAPE** the drum closure ring bolt in order to prevent tearing or cutting the unfiltered bag-on bag.

[7] **IF** the drum to be processed is **NOT** a degraded or loss of integrity drum, **THEN CUT** off the bottom of a bag-off bag approximately 27 to 30 inches from the bottom of the bag-off bag in order to create a bag-off sleeve.

[8] **SLIDE** the bag-off bag over the top of the drum down to between the second and third rolling hoops (from the top) ensuring that the first and second rolling hoops (from the top) are covered.

NOTE *Enough room must be left between the tape and the drum closure ring bolt in order for the drum closure ring to be removed without damaging the bag-on bag.*

[9] **WRAP** tape (vinyl or duct) around the container so that the bag-off bag is tightly bound approximately halfway between the second and third rolling hoops near the top of the drum and overlapping the bag-off bag onto the drum.

[10] **ENSURE** that the drum wrapping (e.g., tape and bag-off bag) is airtight and no air pockets are present.

[11] **WRAP** duct tape around the drum just below the top rolling hoop.

CAUTION

Improper placement of the banding material over the drum hoop may result in movement and banding material slipping down the drum. Do <u>not</u> place banding material over drum hoop.

[12] **PLACE** banding material around the drum over the installed duct tape and **ENSURE** banding material is <u>not</u> placed over the drum hoop.

[13] **TIGHTEN** and **BUCKLE** the banding material with a banding tool.

[14] **COVER** the banding buckle with duct tape to prevent bag tears.

[15] **ROLL DOWN** the remaining bag-off bag around drum.

5. PERFORMANCE—PARENT WASTE CONTAINER PREPARATION (continued)

NOTE *The following two steps may be performed just before loading the drum on the WCG drum lift.*

[16] **IF** items (e.g., gloves or tools) are to be bagged into the WCG with the Prepared Parent Drum,
THEN SECURE the items to the top of the Prepared Parent Drum.

[17] **WEIGH** the Prepared Parent Drum with items secured to the drum top, as applicable, and **RECORD** the Prepared Parent Drum Weight on Attachment 1.

[18] **IF** the Prepared Parent Drum Weight is greater than or equal to 624 lb,
THEN:

[A] **STOP** the work activity.

NOTE *The WCRRF Operations Center notifies the Transuranic (TRU) Waste Disposition Project (WDP) Operations Manager (OM) or designee and the Shift Operations Supervisor (SOS) of the discrepancy.*

[B] **NOTIFY** the WCRRF Operations Center of the discrepancy.

[C] **REQUEST** the applicable actions from the SOS or designee.

[19] **RECORD** the following information on the parent drum lid using a permanent marker:
- Parent drum number
- Parent drum weight
- Date
- Platform scale serial number
- Platform scale calibration due date

6. PERFORMANCE—WCG PARENT DRUM LOADING/UNLOADING

NOTE *Radiological surveys may be performed as determined necessary [e.g., by an RP representative (e.g., RCT)] anytime during the performance of this procedure.*

6.1 WCG Drum Lift Daily Inspection

This sub-section is a stand-alone sub-section and may be performed independently of or in conjunction with other sub-sections.

This inspection is to be performed once each work day before the WCG drum lift is to be used to hoist a waste drum.

NOTE *The individual performing the WCG drum lift inspection **SHALL** be at a minimum a certified Qualified Crane Operator.*

Waste Handling Technician

[1] **OBTAIN** and **REVIEW** the previously completed copy of Attachment 3, WCRRF WCG Drum Lift Inspection Data Sheet.

[2] **OBTAIN** a new copy of attachment 3, and **RECORD** the inspection date on Attachment 3.

[3] **RECORD** any previously identified wire rope damage in Table 3-1 or Table 3-2, or N/A as applicable, on Attachment 3, and **CHECK** (√) applicable box in the Previously Identified Damage column in Table 3-1 or Table 3-2, as applicable, on Attachment 3.

[4] **RECORD** the number of threads exposed out the end of the shaft bolt locknut on the upper, middle, and lower pulley shaft bolts from the previous inspection on Attachment 3.

6.1 WCG Drum Lift Daily Inspection (continued)

[5] **DETERMINE** and **RECORD** on Attachment 3 the current number of threads exposed out the end of the shaft bolt locknut on the upper, middle, and lower pulley shaft bolts (see illustration below).

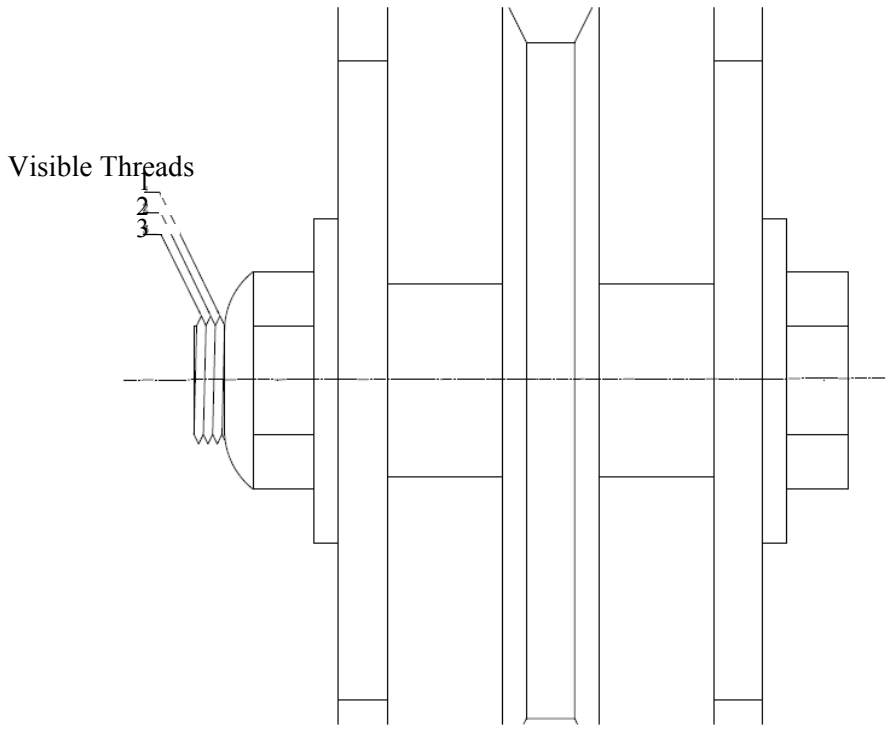

[6] **DETERMINE** whether the shaft bolt end is flush with or extends out of the outer end of the shaft bolt locknut, and **CHECK** (√) YES or NO on Attachment 3.

[7] **INSPECT** the upper, middle, and lower pulley shaft bolts for any signs of wear between the shaft bolt and the support flanges (e.g., shaft not perpendicular to the flange plate), and **CHECK** (√) SAT or UNSAT for each shaft bolt on Attachment 3.

WARNING

The drum lift pendant operator is to announce operation of the lift before raising or lowering the drum and all personnel are to stand clear and to the side of drum movement in order to prevent personnel injuries.

[8] **ENSURE** that the drum trolley is in the full-down position.

6.1 WCG Drum Lift Daily Inspection (continued)

WARNING

Cut resistant (e.g., leather or leather palm mechanics) gloves are to be worn while inspecting the drum trolley wire rope and the cloth is to be held loosely in order to prevent skin punctures resulting from broken wires of the wire rope.

[9] **INSPECT** the entire length of the exposed, upper wire rope from the top of the drum trolley to the wire rope hoist drum by loosely gripping the cloth (e.g., cheese cloth) while sliding the cloth along the length of the wire rope, and **CHECK** (√) YES or NO to indicate whether any new damage is identified on Attachment 3 to indicate whether any upper wire rope damage is discovered.

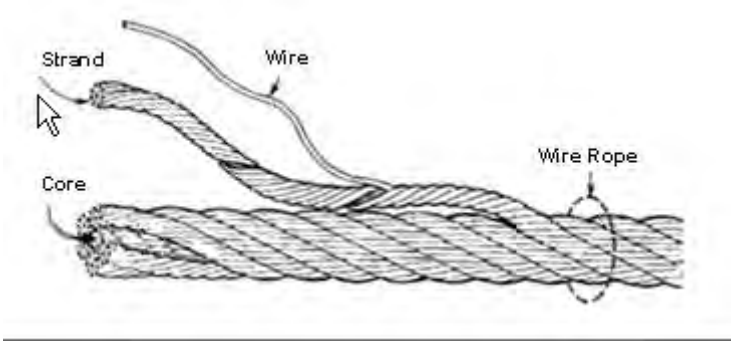

[10] **IF** the cloth snags on the wire rope,
THEN VISUALLY INSPECT the wire rope snag location for damage, and
DOCUMENT the results of the inspection including the location of the damage in Table 3-1, Upper Wire Rope Damage, on Attachment 3.

WARNING

The drum lift pendant operator is to announce operation of the lift before raising or lowering the lift and all personnel are to stand clear and to the side of drum movement in order to prevent personnel injuries.

[11] **ENSURE** that the drum trolley is in the full-up position.

6.1 WCG Drum Lift Daily Inspection (continued)

WARNING

Cut resistant (e.g., leather or leather palm mechanics) gloves are to be worn while inspecting the drum trolley wire rope and the cloth is to be held loosely in order to prevent skin punctures resulting from broken wires of the wire rope.

[12] **INSPECT** the entire length of the exposed, lower wire rope from the top of the drum trolley to the wire rope hoist by loosely gripping the cloth (e.g., cheese cloth) while sliding the cloth along the length of the wire rope, and **CHECK** (√) YES or NO to indicate whether any new damage is identified on Attachment 3 to indicate whether any lower wire rope damage is discovered.

[13] **IF** the cloth snags on the wire rope,
THEN VISUALLY INSPECT the wire rope snag location for damage, and **DOCUMENT** the results of the inspection including the location of the damage in Table 3-2, Lower Wire Rope Damage, on Attachment 3.

[14] **IF** there is more than <u>one</u> wire break within a 2-in. span along the wire rope,
THEN:

[A] **CHECK** (√) UNSAT for the wire rope inspection on Attachment 3.

[B] **GO** to Step 6.1[16].

[15] **CHECK** (√) SAT for the wire rope inspection on Attachment 3.

[16] **IF** UNSAT was checked (√) for any of the WCG inspections,
THEN:

[A] **STOP** the work activity.

[B] **SIGN** and **DATE** on Attachment 3.

NOTE *The WCRRF Operations Center notifies the WDP SOM or designee and the Cognizant System Engineer (CSE) of the discrepancy.*

[C] **NOTIFY** the WCRRF Operations Center of the discrepancy.

[D] **DOCUMENT** the notifications and discrepancies in the Comments section of Attachment 3.

6.2 Parent Drum Loading

This sub-section is a stand-alone sub-section and may be performed independently of or in conjunction with other sub-sections.

Waste Handling Technician

[1] **ENSURE** that all applicable prerequisite actions have been completed.

RCT

[2] **PERFORM** radiological surveys as necessary during the waste container handling evolutions.

Waste Handling Technician

[3] **IF** radiological contamination is detected,
THEN FOLLOW the instructions of the RCT and RWP.

[4] **RECORD** the Processing Date (current date) on Attachment 1, WCRRF WCG Waste Processing Data Sheet.

[5] **IF** lead blankets are to be used as radiological shielding on the parent drum,
THEN:

[A] **WEIGH** the lead blankets, as necessary, and **RECORD** the lead blanket's weight on Attachment 1.

[B] **SUM** the Lead Blanket Weights and the Prepared Parent Drum Weight, and **RECORD** the Total Prepared Parent Drum Weight (drum and lead blankets) on Attachment 1.

[C] **GO** to Step 6.2[7].

[6] **RECORD** the Total Prepared Parent Drum Weight (parent drum weight) on Attachment 1.

[7] **($) DETERMINE** whether the Total Parent Drum Weight is less than 624 lb, and **CHECK** (√) SAT or UNSAT for the Total Parent Drum weighing less than 624 lb on Attachment 1. (SR 4.5.1)

6.2 Parent Drum Loading (continued)

[8] **IF** the Total Parent Drum Weight is greater than or equal to 624 lb,
THEN:

[A] **STOP** the work activity.

NOTE *The WCRRF Operations Center notifies the TRU WDP OM or designee and the SOS of the drum status.*

[B] **NOTIFY** the WCRRF Operations Center, of the drum status.

[C] **REQUEST** the applicable actions from the SOS or designee.

NOTE *P101-25 and Appendix 1, Waste Drum Critical Lift Plan, provide instructions for a drum critical lift.*

[9] **($) IF** the prepared parent drum is a degraded or loss of integrity drum, (AC 5.10.3.1)
OR the parent drum weight is greater than 468 lb,
THEN ENSURE that the prepared parent drum is loaded in compliance with Appendix 1 and this sub-section.

[10] **ENSURE** that the drum lift key has been obtained from the key box.

[11] **ENSURE** that the drum lift key has been inserted, and has been turned to ON in order to establish power to the drum lift.

[12] **ENSURE** that the drum lift has been lowered to the lower limit switch or until the bellyband of the lift cradle can grasp the drum evenly using the drum lift pendent.

[13] **IF** the WCG parent drum port cover is present,
THEN REMOVE the WCG parent drum port cover, and **SET** the WCG parent drum port cover aside.

[14] **ENSURE** that respiratory protection is worn as required by the applicable RWP.

[15] **LOOSEN** the drum closure ring bolt jam nut, as necessary, <u>without loosening the closure ring bolt</u>.

6.2 Parent Drum Loading (continued)

NOTE *The retaining clip (e.g., E-clip) must be an ML-2 component.*

[16] **INSPECT** the four drum lift hinge pins to determine whether all hinge pins have retaining clips (e.g., E-clips) attached to the bottom of the hinge pins.

[17] **IF** a retaining clip is missing from a hinge pin,
THEN:

[A] **STOP** the work activity.

[B] **NOTIFY** the WCRRF Operations Center of the hinge pin status.

Operations Center Operator or designee

[C] **REQUEST** that the SOM evaluate the need to enter LCO 3.5.

Waste Handling Technician

[18] **POSITION** the prepared parent drum on the drum lift with the prepared parent drum closure ring bolt accessible for lid removal when the drum closure ring is inside of the WCG.

[19] **CLOSE** and **SECURE** the bellyband on the prepared parent drum, ensuring that the bag-off sleeve does not get caught on the bellyband.

[20] **ENSURE** that the retaining clips are properly seated in the groove at the bottom of the hinge pins.

6.2 Parent Drum Loading (continued)

[21] **IF** a retaining clip is missing from a hinge pin,
THEN:

[A] **STOP** the work activity.

[B] **NOTIFY** the WCRRF Operations Center of the hinge pin status.

Operations Center Operator or designee

[C] **REQUEST** that the SOM evaluate the need to enter LCO 3.5.

WARNING

Failure to ensure the Trolley Clamp is positioned next to the WCG prior to lowering or raising the drum lift could lead to equipment damage and personnel injury.

[22] **IF** the Trolley Rail clamp is to be used,
AND is not on the drum rail,
THEN PLACE the trolley rail clamp on the rail and **POSITION** next to the WCG.

[23] **RAISE** the prepared parent drum to the WCG parent drum port using the drum lift pendent, leaving an adequate gap (approximately 12 in.) to attach the bag-off sleeve to the WCG parent drum port.

[24] **BAG ON** the prepared parent drum to the WCG parent drum port in accordance with section 7.1, Parent Drum Bag On, and **RETURN** to the following step.

WARNING

Downward movement of the parent drum could result in the drum bag-off bag separating from the WCG drum port and resulting in the spread of radiological contamination.

[25] **TURN** the drum lift key to OFF, and **REMOVE** the drum lift key, as applicable.

[26] **PLACE** the drum lift key in the key box, as applicable.

6.2 Parent Drum Loading (continued)

[27] **IF** the parent drum is to remain attached to the WCG overnight,
THEN OBTAIN the Environmental and Waste Management Facility Operations-Facility Operations Director (EWMO-FOD) approval to leave the parent drum attached to the WCG overnight, and **DOCUMENT** the approval on Attachment 1.

[28] **IF** the EWMO-FOD does **NOT** approve leaving a parent drum attached to the WCG overnight,
THEN ENSURE that the parent drum is removed before the end of the work day.

[29] **PROCESS** the waste in the parent drum in accordance with Section 10, WCG Waste Processing.

6.3 Parent Drum Unloading

This sub-section is a stand-alone sub-section and may be performed independently of or in conjunction with other sub-sections.

Waste Handling Technician

[1] **ENSURE** that all applicable prerequisite actions have been completed.

[2] **ENSURE** that the parent drum has been bagged off of the WCG in accordance with Section 7.2, Parent Drum Bag Off.

RCT

[3] **PERFORM** radiological surveys as necessary during the waste container handling evolutions.

Waste Handling Technician

[4] **IF** radiological contamination is detected,
THEN FOLLOW the instructions of the RCT and RWP.

[5] **ENSURE** that the drum lift key has been obtained from the key box.

[6] **ENSURE** that the drum lift key has been inserted, and **TURN** the drum lift key to ON in order to establish power to the drum lift.

6.3 Parent Drum Unloading (continued)

WARNING

The drum lift pendant operator is to announce operation of the lift before raising or lowering the drum and all personnel are to stand clear and to the side of drum movement in order to prevent personnel injuries.

[7] **POSITION** a drum dolly to receive the parent drum.

WARNING

Personnel SHALL <u>not</u> place any portion of the body (e.g., hands or arms) under an elevated load in order to prevent serious personal injury.

[8] **LOWER** the parent drum down onto the drum dolly using the drum lift pendent.

[9] **OPEN** the drum bellyband, and **UNLOAD** the parent drum from the drum lift.

[10] **IF** no additional drums are to be loaded with the WCG drum lift,
THEN:

[A] **SECURE** the drum bellyband.

[B] **RAISE** the drum lift to the desired height for stowing using the drum lift pendent.

[C] **TURN** the drum lift key to OFF, and **REMOVE** the drum lift key.

[D] **PLACE** the drum lift key in the key box.

[11] **TAPE** the bagged off parent drum horsetail using vinyl tape.

[12] **PLACE** a layer of containment (e.g., the cutoff end of the parent drum bagged off bag or piece of plastic) over the drum lid.

[13] **TAPE** the entire parent drum lid using vinyl tape.

6.3 Parent Drum Unloading (continued)

NOTE 1 *The RCRA Hazardous Waste Codes of a parent container do not apply to the empty parent container or the empty parent container label when the empty parent container satisfies the RCRA definition of an empty container in 40 CFR 261.7, Residues of Hazardous Waste in Empty Containers.* *http://edocket.access.gpo.gov/cfr_2009/julqtr/pdf/40cfr261.7.pdf.*

NOTE 2 *The following steps may be performed at a time that is operationally convenient.*

[14] **OVERPACK** the empty parent drum in accordance with EP-WCRR-WO-DOP-0236, WCRRF Loading/Unloading SWB or 85-gal Drum.

[15] **MOVE** the empty parent drum to a transportainer in accordance with EP-WCRR-WO-DOP-0202, WCRRF and Building TA-50-69 Waste Container Receipt, Movement, and Transfer.

[16] **ENSURE** that the Inventory Control Personnel have been notified that the empty parent drum has been removed from Building TA-50-69.

7. PERFORMANCE—WCG PARENT DRUM BAG-ON/BAG-OFF OPERATIONS

NOTE *Radiological surveys may be performed as determined necessary [e.g., by an RP representative (e.g., RCT)] anytime during the performance of this procedure.*

7.1 Parent Drum Bag On

This sub-section is a stand-alone sub-section and may be performed independently of or in conjunction with other sub-sections.

Waste Handling Technician

[1] **ENSURE** that all applicable prerequisite actions have been completed.

[2] **WEAR** respiratory protection as required by the applicable RWP.

RCT

[3] **PERFORM** radiological surveys as necessary during the waste container handling evolutions.

Waste Handling Technician

[4] **IF** radiological contamination is detected,
THEN FOLLOW the instructions of the RCT and RWP.

[5] **ENSURE** the parent drum has been loaded onto the WCG in accordance with Section 6.2, Parent Drum Loading.

[6] **ENSURE** that the WCG has been wiped down to reduce radiological contamination.

[7] **SET UP** a portable HEPA-filter exhaust system (MAC-21) in order to increase local airflow at the site of the horsetail during the cutting operation.

[8] **REMOVE** the retaining band from the WCG parent drum port bag-off stub.

[9] **VISUALLY INSPECT** the WCG parent drum port bag-off stub for damage (e.g., tears).

[10] **IF** the WCG parent drum port bag-off stub is damaged (e.g., tears),
THEN:

[A] **REPAIR** the damage (e.g., tears) using vinyl tape.

[B] **REQUEST** an RCT survey for radiological contamination.

7.1 Parent Drum Bag On (continued)

[C] **IF** radiological contamination is detected,
THEN FOLLOW the instructions of the RCT and RWP.

[11] **SLIDE** the bag-off stub down to the outer ring of the WCG parent drum port.

[12] **SWIPE** around the WCG parent drum port with a maslin smear, and **REQUEST** an RCT monitor the swipe for radiological contamination.

[13] **IF** radiological contamination is detected,
THEN FOLLOW the instructions of the RCT and RWP.

NOTE *The new bag-on bag is attached to the parent drum.*

[14] **SLIDE** the new bag-on bag over the old bag-on bag stub to the inner ring of the WCG parent drum port.

[15] **APPLY** vinyl tape to the new bag-on bag where the retaining band buckle is to be placed.

[16] **SECURE** the new bag-on bag with the retaining band.

[17] **REMOVE** the bag-off stub from the WCG parent drum port, and **DROP** the bag-off stub into the glovebox.

WARNING

The drum lift pendant operator is to announce operation of the lift before raising or lowering the drum and all personnel are to stand clear and to the side of drum movement in order to prevent personnel injuries.

[18] **ALTERNATELY RAISE** the parent drum and **GUIDE** the bag-on bag to prevent damage to the bag-on bag until the parent drum has been raised to the upper limit switch or until the drum is adequately inserted.

7.1 Parent Drum Bag On (continued)

NOTE *The Trolley Rail Clamp is used at the discretion of the PIC, and/or when processing heavy drums to act as a rail stop to restrict forward drum movement when removing heavy items from drum into glovebox.*

[19] **IF** the Trolley Rail Clamp is to be used,
THEN:

[A] **SLIDE** the Trolley Rail Clamp against the drum trolley rail assembly next to the lifting fixture.

[B] **TIGHTEN** the Trolley Rail clamp handle clockwise to secure the clamp against the drum trolley.

7.2 Parent Drum Bag Off

This sub-section is a stand-alone sub-section and may be performed independently of or in conjunction with other sub-sections.

Waste Handling Technician

[1] **ENSURE** that all applicable prerequisite actions have been completed.

[2] **WEAR** respiratory protection as required by the applicable RWP.

RCT

[3] **PERFORM** radiological surveys as necessary during the waste container handling evolutions.

Waste Handling Technician

[4] **IF** radiological contamination is detected,
THEN FOLLOW the instructions of the RCT and RWP.

[5] **IF** Trolley Rail Clamp was used,
THEN LOOSEN handle counterclockwise and **SLIDE** the Trolley Rail Clamp away from the drum trolley (towards the WCG).

[6] **PLACE** the drum lid and drum closure ring bolt are on the parent waste drum.

7.2 Parent Drum Bag Off (continued)

[7] **IF** the parent drum closure ring **CANNOT** be properly attached to the parent drum, **AND** the parent drum is empty,
THEN:

[A] **AFFIX** the closure ring, if possible, to the parent drum and **TAPE** the parent drum lid onto the drum using vinyl tape or equivalent.

[B] **GO** to Step 7.2[11].

NOTE *The removal of a parent drum from the WCG which contains waste material must be performed as a critical lift.*

[8] **IF** the parent drum closure ring **CANNOT** be properly attached to the parent drum, **AND** the parent drum contains waste material,
THEN:

[A] **STOP** the activity and place waste material in a safe configuration (e.g., cover with a fire blanket).

[B] **NOTIFY** supervision and the WCRRF Operations Center of the discrepancy and **REQUEST** the applicable actions.

[9] **ENSURE** that the drum closure ring bolt jam nut is tightened against the non-threaded lug of the drum closure ring.

[10] **ENSURE** that duct tape has been placed on the drum closure ring bolt in order to prevent damage to the bag-off sleeve.

[11] **ENSURE** that the WCG has been wiped down to reduce radiological contamination.

[12] **SET UP** a portable HEPA-filter exhaust system (MAC-21) to increase local airflow at the site of the horsetail during the cutting operation.

[13] **OBTAIN** the drum lift key from the key box, as applicable.

[14] **INSERT** the drum lift key, and **TURN** the drum lift key to ON in order to establish power to the drum lift, as applicable.

7.2 Parent Drum Bag Off (continued)

WARNING

The drum lift pendant operator is to announce operation of the lift before raising or lowering the drum and all personnel are to stand clear and to the side of drum movement in order to prevent personnel injuries.

[15] **LOWER** the parent drum sufficiently to create a horsetail using the drum lift pendent.

[16] **INSPECT** the bag-off bag for damage (e.g., tears).

[17] **IF** bag-off bag is damaged (e.g., tears),
THEN:

[A] **REPAIR** the damage (e.g., tears) using vinyl tape.

[B] **REQUEST** an RCT survey for radiological contamination.

[C] **IF** radiological contamination is detected,
THEN FOLLOW the instructions of the RCT and RWP.

[18] **MIST** inside of the bag-off bag with spray cleaner and **RUB** the bag-off bag together to ensure the complete coverage of the spray cleaner in order to control contamination.

[19] **SQUEEZE** as much air as possible out of the bag-off bag.

[20] **GATHER** the bag-off bag and **COMPRESS** the bag-off bag in order to create a horsetail approximately 8 to 10 in. long.

[21] **TIGHTLY SECURE** the horsetail with vinyl tape or filament tape.

[22] **FIRMLY ATTACH** two binding ties near the center of the horsetail, approximately 6 in. apart.

[23] **IF** bagging off the last parent drum for the work day,
THEN FIRMLY ATTACH a second binding tie approximately 2 in. from the center of the horsetail on the WCG side of the horsetail.

7.2 Parent Drum Bag Off (continued)

NOTE *The excess part of the binding tie protruding through the binding tie latch is not to be cut off.*

[24] **COVER** the attached binding ties with vinyl tape.

Waste Handling Technician Three

[25] **POSITION** the horsetail cutters between the binding ties of the horsetail.

Waste Handling Technician One

[26] **GRASP** the top of horsetail.

Waste Handling Technician Two

[27] **GRASP** the bottom of horsetail.

WARNING

Extremities SHALL not be placed inside the jaws of the cutting tool in order to prevent personnel injury due to pinching.

Waste Handling Technician Three

[28] **CUT** the horsetail between the binding ties.

Waste Handling Technician One and Two

[29] **SIMULTANEOUSLY COVER** the cut stubs of the bag-off bag with vinyl tape.

[30] **ENSURE** that the cut-stubs have been covered with a final layer of vinyl tape, as directed by an RCT.

NOTE 1 *Used cheesecloth are to be disposed of as compactable waste.*

NOTE 2 *The following step may be performed out of sequence.*

Waste Handling Technician Three

[31] **WIPE** down the cutters used to cut the horsetail, place the cutters in a holder, and place the cutters in the designated staging area.

7.2 Parent Drum Bag Off (continued)

NOTE *Used cheesecloth are to be disposed of in the compactable waste container.*

Waste Handling Technician

[32] **DECONTAMINATE**, as necessary, in accordance with RCT instructions.

[33] **REMOVE** the empty parent drum from the WCG drum lifting device in accordance with Section 6.3, Parent Drum Unloading.

8. PERFORMANCE—WCG DAUGHTER DRUM, BAGPORT, OR GLOVEPORT BAG-ON/BAG-OFF OPERATIONS

NOTE *Radiological surveys may be performed as determined necessary [e.g., by an RP representative (e.g., RCT)] anytime during the performance of this procedure.*

8.1 Bag On Daughter Drum, Bagport, or Gloveport

This sub-section is a stand-alone sub-section and may be performed independently of or in conjunction with other sub-sections.

NOTE *This section provides instructions for bagging onto the WCG at a daughter drum port, bagport, or gloveport.*

Waste Handling Technician

[1] **ENSURE** that all applicable prerequisite actions have been completed.

[2] **IF** a daughter drum is to be bagged onto the WCG,
THEN ENSURE that the daughter drum has been prepared in accordance with EP-WCRR-WO-DOP-0221.

[3] **WEAR** respiratory protection as required by the applicable RWP.

RCT

[4] **PERFORM** radiological surveys as necessary during the waste container handling evolutions.

Waste Handling Technician

[5] **IF** radiological contamination is detected,
THEN FOLLOW the instructions of the RCT and RWP.

[6] **ENSURE** that the WCG has been wiped down to reduce radiological contamination.

[7] **IF** directed by an RCT to establish a portable HEPA-filter exhaust system,
THEN SET UP a portable HEPA-filter exhaust system (MAC-21)in order to increase the local airflow at the site of the horsetail during the cutting operation.

[8] **REMOVE** the retaining band from the bag-off stub.

[9] **VISUALLY INSPECT** under the retaining band of the previous drum/bagport/gloveport bag-off stub for damage (e.g., tears).

8.1 Bag On Daughter Drum, Bagport, or Gloveport (continued)

[10] **IF** the previous drum/bagport/gloveport bag-off stub is damaged (e.g., tears),
THEN SEAL the damaged area with vinyl tape.

[11] **SLIDE** the bag-off stub down to the outer ring of the port (drum, bagport, or gloveport).

[12] **SWIPE** around the port with a maslin smear, and **REQUEST** an RCT monitor the swipe for radiological contamination.

[13] **IF** radiological contamination is detected,
THEN FOLLOW the instructions of the RCT and RWP.

[14] **SLIDE** a new bag-on bag over the bag-off stub.

[15] **ADHERE** vinyl tape to the new bag-on bag where the retaining band buckle is to be placed.

[16] **SECURE** the new bag with the retaining band.

[17] **REMOVE** the bag-off bag stub and drop the bag-off bag stub into the daughter drum/bagport bag/gloveport bag, as applicable.

[18] **IF** bagging on a daughter drum,
THEN:

[A] **MOVE** the drum from the drum dolly to the vertical lift table.

[B] **MANUALLY RAISE** the drum to the appropriate height.

8.2 Bag Off Daughter Drum

This sub-section is a stand-alone sub-section and may be performed independently of or in conjunction with other sub-sections.

NOTE *This section provides instructions for bagging off a daughter drum from the WCG.*

Waste Handling Technician

[1] **ENSURE** that all applicable prerequisite actions have been completed.

[2] **WEAR** respiratory protection as required by the applicable RWP.

RCT

[3] **PERFORM** radiological surveys as necessary during the waste container handling evolutions.

Waste Operator

[4] **IF** radiological contamination is detected,
THEN FOLLOW the instructions of the RCT and RWP.

[5] **ENSURE** that the WCG has been wiped down to reduce radiological contamination.

[6] **SET UP** a portable HEPA-filter exhaust system (MAC-21) in order to increase the local airflow at the site of the horsetail during the cutting operation.

[7] **MANUALLY LOWER** the vertical lift table.

[8] **INSPECT** the bag-off bag for damage (e.g., tears).

[9] **IF** the bag-off bag is damaged (e.g., tears),
THEN:

[A] **REPAIR** the damage (e.g., tears) using vinyl tape.

[B] **REQUEST** an RCT survey for radiological contamination.

[C] **IF** radiological contamination is detected,
THEN FOLLOW the instructions of the RCT and RWP.

8.2 Bag Off Daughter Drum (continued)

WARNING

Proper lifting techniques and buddy system SHALL be used when moving a daughter drum from the lift table to the drum dolly in order to prevent personnel injury and to prevent separating the daughter drum bag-off bag from the WCG daughter drum port.

NOTE *A VersaLift may be used to assist the lifting of a drum off of the vertical lift table.*

[10] **MOVE** the drum from the vertical lift table to a drum dolly.

[11] **MIST** inside of the bag-off bag with spray cleaner and **RUB** the bag-off bag together to ensure the complete coverage of the spray cleaner in order to control contamination.

[12] **SQUEEZE** as much air as possible out of the bag-off bag.

[13] **GATHER** the bag-off bag.

[14] **ROTATE** the drum <u>or</u> **COMPRESS** the bag-off bag (as applicable) in order to create a horsetail approximately 8 to 10 in. long.

[15] **TIGHTLY SECURE** the horsetail with vinyl tape or filament tape.

[16] **FIRMLY ATTACH** two binding ties near the center of the horsetail, approximately 6 in. apart.

NOTE *The excess part of the binding tie protruding through the binding tie latch is <u>not</u> to be cut off.*

[17] **COVER** the attached binding ties with vinyl tape.

Waste Handling Technician Three

[18] **POSITION** the horsetail cutters between the binding ties of the horsetail.

Waste Handling Technician One

[19] **GRASP** top of horsetail.

8.2 Bag Off Daughter Drum (continued)

Waste Handling Technician Two

[20] **GRASP** the bottom of the horsetail.

WARNING

Extremities SHALL <u>not</u> be placed inside the jaws of the cutting tool in order to prevent personnel injury due to pinching.

Waste Handling Technician Three

[21] **CUT** the horsetail between the binding ties.

Waste Handling Technician One and Two

[22] **SIMULTANEOUSLY COVER** the cut stubs of the bag-off bag with vinyl tape.

[23] **ENSURE** that the cut-stubs have been covered with a final layer of vinyl tape, as directed by an RCT.

NOTE 1 *Used cheesecloth **SHALL** be disposed of as compactable waste.*

NOTE 2 *The following step may be performed out of sequence.*

Waste Handling Technician Three

[24] **WIPE** down the cutters used to cut the horsetail, place the cutters in a holder, and place the cutters in the designated staging area.

Waste Handling Technician

[25] **IF** the bag-off bag has a filter that is covered with tape,
THEN:

[A] **REMOVE** the tape from bag filter.

[B] **REQUEST** an RCT survey for radiological contamination.

[C] **IF** radiological contamination is detected,
THEN FOLLOW the instructions of the RCT and RWP.

8.2 Bag Off Daughter Drum (continued)

[26] **IF** a POC was bagged off of the WCG,
THEN GO to Step 10.2[13].

NOTE 1 *Waste containers with liquids (any amount or configuration) that have not been solidified (absorbed) must be managed on secondary containment pallets and have a FREE LIQUID label affixed.*

NOTE *All parent drum RCRA Hazardous Waste Codes are not assigned to a daughter drum when the reason (item) for assigning a RCRA Hazardous Waste Code to the parent drum has not been placed into the daughter drum. The WMC can assist with assigning the appropriate RCRA Hazardous Waste Codes to a drum.*

[27] **CLOSE** the daughter drum in accordance with EP-WCRR-WO-DOP-0221.

[28] **ENSURE** that the Inventory Control Personnel have been notified that daughter drums and an empty parent drum have been generated in Building TA-50-69.

9. PERFORMANCE—ITEM BAG-IN/BAG-OUT OPERATIONS

NOTE *Radiological surveys may be performed as determined necessary [e.g., by an RP representative (e.g., RCT)] anytime during the performance of this procedure.*

9.1 WCG Item Bag-Out

This sub-section is a stand-alone sub-section and may be performed independently of or in conjunction with other sub-sections.

Waste Handling Technician

[1] **ENSURE** that all applicable prerequisite actions have been completed.

[2] **WEAR** respiratory protection as required by the applicable RWP.

RCT

[3] **PERFORM** radiological surveys as necessary during the waste container handling evolutions.

Waste Handling Technician

[4] **IF** radiological contamination is detected,
THEN FOLLOW the instructions of the RCT and RWP.

[5] **ENSURE** that a portable CAM is placed in the vicinity of the filtered bagout bag during WCG operations as directed by RP-1.

[6] **IF** a bag is required on the WCG port,
THEN:

[A] **ENSURE** that the WCG has been wiped down to reduce radiological contamination.

[B] **SET UP** a portable HEPA-filter exhaust system (MAC-21) and elephant trunk as close as possible to the filtered bagout bag in order to increase the local airflow at the site of the horsetail during the cutting operation.

NOTE *Glovebox negative pressure **SHALL** be used to the extent possible in order to remove excess air from the filtered bag-out bag during bagout operations.*

[C] **REMOVE** the retaining band from the drum/bagport/gloveport bag-out stub.

9.1 WCG Item Bag-Out (continued)

[D] **VISUALLY INSPECT** under the retaining band of the previous drum/bagport/gloveport bag-out stub for damage (e.g., tears).

[E] **IF** the previous drum/bagport/gloveport bag-out stub is damaged (e.g., tears), **THEN SEAL** the damaged area with vinyl tape.

[F] **SLIDE** the bag-out stub down to the outer ring of the port (drum, bagport, or gloveport).

[G] **SWIPE** around the port with a maslin smear, and **REQUEST** an RCT monitor the swipe for radiological contamination.

[H] **IF** radiological contamination is detected,
THEN FOLLOW the instructions of the RCT and RWP.

[I] **SLIDE** new bag-on bag over the bag-out stub.

[J] **ADHERE** vinyl tape to the new bag-on bag where the retaining band buckle is to be placed.

[K] **SECURE** the new bag-on bag with the retaining band.

[L] **REMOVE** the bag-out bag stub and drop the bag-out bag stub into the daughter drum/bagport bag/gloveport bag, as applicable.

[7] **ENSURE** that the WCG has been wiped down to reduce radiological contamination.

[8] **ENSURE** a portable HEPA-filter exhaust system (MAC-21) and elephant trunk are set up as close as possible to the filtered bagout bag in order to increase the local airflow at the site of the horsetail during the cutting operation.

[9] **SLIDE** the item to be bagged out to the end of the bag-out bag.

[10] **INSPECT** the bag-out bag for damage (e.g., tears).

[11] **IF** the bag-out bag is damaged (e.g., tears),
THEN:

[A] **REPAIR** the damage (e.g., tears) using vinyl tape.

9.1 WCG Item Bag-Out (continued)

[B] **REQUEST** an RCT survey for radiological contamination.

[C] **IF** radiological contamination is detected,
THEN FOLLOW the instructions of the RCT and RWP.

[12] **MIST** inside of the bag-out bag with spray cleaner and **RUB** the bag-out bag together to ensure the complete coverage of the spray cleaner in order to control contamination.

[13] **SQUEEZE** as much air as possible out of the bag-out bag.

[14] **GATHER** the bag-out bag.

[15] **ROTATE** the drum <u>or</u> **COMPRESS** the bag-out bag (as applicable) in order to create a horsetail approximately 8 to 10 in. long.

[16] **TIGHTLY SECURE** the horsetail with vinyl tape or filament tape.

[17] **ENSURE** that the horsetail is located far enough away from the filtered bagout bag to avoid creasing, folding, or otherwise challenging the integrity of the filter.

[18] **FIRMLY ATTACH** two binding ties near the center of the horsetail, approximately 6 in. apart.

[19] **IF** bagging out the last item for the work day,
THEN FIRMLY ATTACH a second binding tie approximately 2 in. from the center of the horsetail on the WCG side of the horsetail.

NOTE *The excess part of the binding tie protruding through the binding tie latch tie is <u>not</u> to be cut off.*

[20] **COVER** the attached binding ties with vinyl tape.

Waste Handling Technician Three

[21] **POSITION** the horsetail cutters between the binding ties of the horsetail.

Waste Handling Technician One

[22] **GRASP** top of horsetail.

9.1 WCG Item Bag-Out (continued)

Waste Handling Technician Two

[23] **GRASP** bottom of horsetail.

WARNING

Extremities SHALL <u>not</u> be placed inside the jaws of the cutting tool in order to prevent personnel injury due to pinching.

Waste Handling Technician Three

[24] **CUT** the horsetail between the binding ties.

Waste Handling Technician One and Two

[25] **SIMULTANEOUSLY COVER** the cut stubs of the bag-out bag with vinyl tape.

[26] **ENSURE** that the cut-stubs have been covered with a final layer of vinyl tape, as directed by an RCT.

NOTE 1 *Used cheesecloth **SHALL** be disposed of as compactable waste.*

NOTE 2 *The following step may be performed out of sequence.*

Waste Handling Technician Three

[27] **WIPE** down the cutters used to cut the horsetail, and **PLACE** the cutters in a holder, and **PLACE** the cutters in the designated staging area.

Waste Handling Technician

[28] **IF** the bag-out bag has a filter that is covered with tape,
THEN:

[A] **REMOVE** the tape from bag filter.

[B] **REQUEST** an RCT survey for radiological contamination.

[C] **IF** radiological contamination is detected,
THEN FOLLOW the instructions of the RCT and RWP.

9.2 WCG Introductory Port

This sub-section is a stand-alone sub-section and may be performed independently of or in conjunction with other sub-sections.

NOTE *This sub-section provides instructions for introducing items into the WCG.*

WARNING

Items are not to be removed from the WCG using the airlock since items placed in the airlock from the interior of the WCG are possibly radiologically contaminated.

Waste Handling Technician

[1] **ENSURE** that all applicable prerequisite actions have been completed.

[2] **PREPARE** the area in accordance with RCT instructions.

[3] **WEAR** respiratory protection as required by the applicable RWP.

RCT

[4] **PERFORM** radiological surveys as necessary during the waste container handling evolutions.

Waste Handling Technician

[5] **IF** radiological contamination is detected,
THEN FOLLOW the instructions of the RCT and RWP.

WARNING

Both WCG airlock doors are to remain closed until they must be opened to introduce an item into the WCG in order to prevent releasing radiological contamination out of the WCG.

[6] **ENSURE** that both WCG Introductory Port doors are securely closed.

9.2 WCG Introductory Port (continued)

[7] **OPEN** the outer WCG Introductory Port door.

WARNING

Items are to be placed inside of the WCG airlock in a manner that does <u>not</u> disturb the WCG airlock surfaces in order to mitigate the spread of radiological contamination.

[8] **GENTLY PLACE** the item to be introduced into the WCG airlock.

[9] **CLOSE** the outer WCG Introductory Port door.

[10] **OPEN** the inner WCG Introductory Port door.

[11] **REMOVE** the item from the WCG Introductory Port and **PLACE** the item in the WCG.

[12] **CLOSE** the inner WCG Introductory Port door.

[13] **VERIFY** that both WCG Introductory Port doors are securely closed.

10. PERFORMANCE—WCG WASTE PROCESSING

This section is a stand-alone section and may be performed independently of or in conjunction with other Performance sections.

NOTE *Radiological surveys may be performed as determined necessary [e.g., by an RP representative (e.g., RCT)] anytime during the performance of this procedure.*

10.1 WCG Waste Processing Preparation

Waste Handling Technician

[1] **ENSURE** that all applicable prerequisite actions have been completed.

[2] **($) ENSURE** that the battery charger for the cordless drill in the WCG has been unplugged. (SAC 5.10.1.6.1.)

[3] **ENSURE** that the parent drum has been bagged onto the WCG in accordance with Section 7.1, Parent Drum Bag On.

NOTE *The following step may be performed out of sequence.*

[4] **ENSURE** that the daughter drums have been bagged onto the WCG in accordance with Section 8.1, Bag On Daughter Drum, Bagport, or Gloveport, and **RECORD** the following information on Attachment 1:

- Daughter Drum Number
- Daughter Drum Filter Number
- Daughter Drum Bag Filter Number
- Daughter Drum Purchase Order Number

[5] **IF** VE activities are to occur,
THEN ENSURE that CCP-TP-113, Standard Contact Handled Waste Visual Examination, is performed concurrently with this procedure.

[6] **SLOWLY REMOVE** the parent drum lid, being prepared to close the lid if there are unexpected conditions.

[7] **EXAMINE** the contents of the parent drum, and **DETERMINE** whether the contents of the drum have any unexpected items.

10.1 WCG Waste Processing Preparation (continued)

[8] **IF** any unexpected items are present in the parent drum,
THEN:

[A] **CLOSE** the parent drum.

[B] **NOTIFY** supervision and the WCRRF Operations Center of the discrepancy, and **REQUEST** the applicable actions.

[C] **DOCUMENT** the discrepancy and applicable actions in the Comments section of Attachment 1.

NOTE *The NCR may be initiated at a time that is operationally convenient.*

[D] **IF** directed by supervision to initiate an NCR,
THEN ENSURE that an NCR is initiated in accordance with P330-6.

NOTE *Placing the parent drum lid over the waste items being surveyed is a simulation of the waste items being inside of a drum and provides a representation of the expected dose rate outside of the drum in order to determine whether the dose rate may exceed 190 mrem/hr and is the desired survey method.*

[9] **ENSURE** that a drum lid is placed over the waste items to be surveyed, as necessary, and **REQUEST** an RCT perform radiological surveys of the items being removed from the parent drum.

NOTE 1 *Unvented, Sealed waste packages are those waste packages that have a positive locking mechanism, such as a gasket with drum closure ring or a screw top lid (with no other openings) to seal the lid to the waste package.*

[10] **IF** the parent drum contains an unvented, sealed waste package,
THEN:

[A] **RECORD** the parent drum container identification number on Attachment 4, WCRRF WCG Breaching (Opening) Unvented, Sealed Waste Packages.

10.1 WCG Waste Processing Preparation (continued)

NOTE *Multiple copies of Attachment 4 may be required for parent drums containing more than four unvented, sealed waste packages that are 5- to 30 gal. Only a single copy of Attachment 4 is necessary for parent drums with multiple unvented, sealed waste packages that are less than 5 gal.*

[B] **CHECK** (√) the applicable box on Attachment 4 to indicate the type of unvented, sealed waste package (e.g., Metal 5- to 30-gal, Non-metallic 5- to 30-gal, or < 5-gal).

NOTE *The cordless drill is considered to be a spark-producing tool and is to be placed aside in the WCG, and not handled, when non-sparking tools are required.*

[C] **($) ENSURE** that non-sparking tools are available for use in the WCG, and **ENSURE** that the availability of the non-sparking tools has been documented on Attachment 4. (SAC 5.10.1.6.1).

NOTE *Administrative Control Lock Log Sheet form 10.4 of EP-DIV-AP-0117* ***SHALL*** *be completed anytime the lock is placed or removed for WCG receptacles lockout.*

[D] **($) ENSURE** that the WCG electrical receptacles have been de-energized and locked open/off with an administrative lock, and **CHECK (√)** SAT or UNSAT on Attachment 4, and **MAKE** an entry on the Administrative Control Log Sheet to document that the WCG electrical receptacles are locked open/off. (SAC 5.10.1.6.2)

10.1 WCG Waste Processing Preparation (continued)

NOTE 1 *A proper ground requires that all ends of the grounding strap be firmly attached to a clean-bare metal surface.*

NOTE 2 *Attachment 5,WCRRF WCG Breaching (Opening) Metal 5- to 30-gal Unvented-Sealed Waste Packages Surveillance, is completed to document the operator and independent verifier installing the grounding devices within TA-50-69.*

NOTE 3 *The following step is to be performed by an operator and then independently verified by a second operator.*

NOTE 4 *Separate copies of Attachment 5 are required for each waste package.*

Waste Handling Technician

[E] **IF** the waste package is a METAL 5- to 30-gal waste package,
THEN:

[a] **RECORD** the parent drum container identification number on Attachment 5.

[b] **($) ENSURE** that the parent drum has been properly grounded to the WCG using a grounding strap in the WCG, and **CHECK** (√) SAT or UNSAT on Attachment 5 to document that the grounding strap was attached. (SR 4.6.1)

Independent Verifier

[c] **VERIFY** that the parent drum has been properly grounded to the WCG using a grounding strap in the WCG, and **CHECK** (√) SAT or UNSAT on Attachment 5.

10.1 WCG Waste Processing Preparation (continued)

Waste Handling Technician

[11] **IF** processing a parent drum containing an unvented, sealed 5- to 30-gal waste package, **THEN:**

WARNING

Unvented, sealed waste packages may contain a concentration of hydrogen gas and are to be handled or identified in this document using grounding devices and lid restraints in order to minimize any possible adverse effects from potentially releasing hydrogen.

NOTE *Drum lid restraints that are not in use are to be stored in such a matter that the drum lid restraints are protected from degradation (e.g., in a daughter drum).*

[A] **($) VISUALLY** inspect the waste package lid restraint for the following, and **DOCUMENT** the results of the inspection on Attachment 4:

- Degradation (e.g., no indication of cracked parts, missing fasteners, loose or frayed parts, excessive wear, or unusual deformation) (SAC 5.10.1.5.1)
- Missing or illegible identification
- Melting or charring
- Broken or worn stitching in load bearing splices
- Knots in any part of the drum lid restraint
- Discoloration and brittle or stiff areas

[B] **($) ATTACH** the waste package lid restraint to the waste package and verify proper installation, and **DOCUMENT** that the lid restraint has been attached on Attachment 4. (SAC 5.10.1.5.1)

NOTE 1 *A proper ground requires that all ends of the grounding strap be firmly attached to a clean-bare metal surface.*

NOTE 2 *Separate copies of Attachment 4 are required for each waste package.*

[C] **($) IF** the waste package is a METAL 5- to 30-gal waste package, **THEN GROUND** the metal waste package using a grounding strap in the WCG, and **CHECK** (√) SAT or UNSAT on Attachment 5 to document that the grounding strap was attached.. (LCO 3.6 and SR 4.6.1)

Independent Verifier

[D] **VERIFY** that the grounding strap is attached and **CHECK** (√) SAT or UNSAT on Attachment 5.

10.1 WCG Waste Processing Preparation (continued)

[E] **RECORD** the following information, Name, Signature, Z Number and Date on Attachment 5.

Waste Handling Technician

[F] **($) IF** the grounding strap was attached to a waste package or parent drum, **AND** the grounding strap becomes detached from either the waste package or the parent drum during the opening of the waste package,
THEN ENTER the Actions of LCO 3.6, and **NOTIFY** the WCRRF Operations Center. (LCO 3.6)

[G] **OPEN** the waste package, and **REMOVE** the lid restraint and waste package lid.

[H] **ENSURE** that the lid restraint and waste package lid are placed out of the way of the open end of the waste package.

[I] **($) RECORD** the time that the lid restraint and waste package lid were removed from the waste package on Attachment 4. (SAC 5.10.1.5.2 and SAC 5.10.1.6.3)

[J] **ENSURE** that all WCG operations have been suspended.

[K] **($) WHEN** 30 min. has elapsed,
THEN DOCUMENT the time and that greater than or equal to 30 min. has elapsed since the lid restraint and waste package lid were removed on Attachment 4. (SAC 5.10.1.5.2 and SAC 5.10.1.6.3)

[L] **RESUME** operations as directed by supervision.

[M] **REMOVE** the grounding straps from the <u>metal</u> waste package, as applicable.

[N] **IF** the waste packaged opened contains a 5- to 30-gal unvented, sealed waste package,
THEN GO to Step 10.1.[11][A].

[O] **IF** the waste package opened contains an unvented, sealed waste package of less than 5 gal,
THEN GO to Step 10.1[12].

[P] **REMOVE** the grounding straps from the parent drum.

10.1 WCG Waste Processing Preparation (continued)

[Q] **IF** directed by supervision,
THEN REMOVE the administrative lock from the WCG electrical receptacles, and **ENERGIZE** the WCG electrical receptacles.

[12] **IF** processing a parent drum containing an unvented, sealed waste packages of less than 5 gal,
THEN:

[A] **OPEN** the waste packages, and **REMOVE** the waste package lids.

NOTE *For situations where multiple waste packages are being opened (e.g., sample vials) the 30-min. wait period before the electrical receptacles may be re-energized starts after the last waste package is opened.*

[B] **($) RECORD** the time that the last unvented, sealed waste package lid was removed from the waste package on Attachment 4. (SAC 5.10.1.6.3)

WARNING

The WCG electrical receptacles is not to be re-energized until 30 min. has elapsed since the unvented waste package was opened in order to prevent the possibility of a flammable gas mixture deflagration.

NOTE *Glovebox operations may continue after opening a less than 5 gal-unvented sealed waste package while waiting the required 30 min. before re-energizing the WCG electrical receptacles.*

[C] **WHEN** 30 min. has elapsed,
THEN:

[a] **($) DOCUMENT** the time and that that greater than or equal to 30 min. has elapsed since the waste package lid was removed on Attachment 4. (SAC 5.10.1.6.3)

10.1 WCG Waste Processing Preparation (continued)

[b] **REMOVE** the grounding straps from the parent drum.

[c] **REMOVE** the administrative lock from the WCG electrical receptacles, and energize the WCG electrical receptacles as directed by supervision.

[13] **IF** sparking is observed at anytime during the processing of waste material, **THEN:**

[A] **PLACE** a fire barrier (e.g., MET-L-X or fire blanket) over the suspect waste material.

[B] **STOP** waste processing.

[C] **ENSURE** that a Fire Watch has been stationed at the WCG to continuously monitor the waste in the WCG, and **CHECK** (√) YES or NO on Attachment 1.

NOTE *The following personnel are notified by the WCRRF Operations Center:*

- *OM or designee*
- *Solid Waste Regulatory Compliance Group*
- *Industrial Hygienist*
- *Cognizant System Engineer*
- *Radiation Protection*

[D] **NOTIFY** the WCRRF Operations Center/Shift Operations Manager of the discrepancy, and **DOCUMENT** the notification and discrepancy in the Comments section of Attachment 1:

[E] **IF** the suspect item is to be bagged out of the WCG, **THEN BAG OUT** the suspect item in accordance with Section 9.1, WCG Item Bag-Out.

[F] **PLACE** the suspect item in an empty daughter drum.

[G] **IF** the daughter drum is attached to the WCG, **THEN BAG OFF** the daughter drum in accordance with Section 8.2, Bag Off Daughter Drum.

[H] **CLOSE** the daughter drum in accordance with EP-WCRR-WO-DOP-0221.

10.1 WCG Waste Processing Preparation (continued)

NOTE *The NCR may be initiated at a time that is operationally convenient.*

[I] **ENSURE** that an NCR is initiated in accordance with P330-6 for the daughter drum.

[14] **IF** a shielded container (e.g., lead lined) is in the parent drum,
THEN:

WARNING

Personnel are to avoid the high radiation exposure area in front of a shielded container that has been accessed in order to prevent increased exposure to radiation due to radiation streaming from the open portion of the shielded container.

[A] **ENSURE** that personnel in Building TA-50-69 are notified that a shielded container is to be accessed and that they are positioned such that when the shielded container is accessed the radiation streaming from the shielded container is directed away from personnel.

[B] **ACCESS** the shielded container contents without removing the contents, and **REQUEST** an RCT to perform a radiological survey to determine the radiation levels.

[C] **IF** the radiation level exceeds an RWP limit,
THEN:

[a] **ENSURE** that the shielding has been replaced, and **CLOSE** the shielded container.

[b] **REQUEST** an RCT perform a radiological survey on the closed shielded container to determine the radiation levels.

[c] **IF** the closed, shielded container radiation level exceeds the RWP limits,
THEN:

1. **ENSURE** that all waste material is in a safe configuration.

2. **STOP** the work activity.

10.1 WCG Waste Processing Preparation (continued)

3. **COMPLY** with the RCT's instructions to minimize radiological exposure.

4. **NOTIFY** the WCRRF Operations Center of the condition, and **REQUEST** the applicable actions.

NOTE *Waste placed into daughter drums must be from a single parent drum except for the collection drum (pressurized container or aerosol can).*

[d] **IF** the waste material is **NOT** to be processed at this time as directed by supervision,
THEN:

1. **PLACE** the waste items from the parent drum into a daughter drum.

2. **BAG OFF** the parent and daughter drums in accordance with the applicable section of this procedure.

3. **IF** a Fire Watch was stationed,
THEN ENSURE that all INVENTORY is in a safe configuration, and **SECURE** the Fire Watch, and **CHECK** (√) YES or NO on Attachment 1.

NOTE *The NCR may be initiated at a time that is operationally convenient.*

4. **ENSURE** that an NCR is initiated in accordance with P330-6.

5. **NOTIFY** the WCRRF Operations Center of the waste disposition.

10.1 WCG Waste Processing Preparation (continued)

NOTE 1 *Continued operation may require the work activity to be paused in order to allow operators and supervision to evaluate the condition to determine the necessary response to the situation (e.g., re-enter area under a different RWP or prepare a POC to accept the waste material).*

NOTE 2 ***($)*** *A STATIONARY FIRE WATCH is required in the OPERATION and WARM STANDBY MODE when the WCG INVENTORY is greater than 300 PE-Ci equivalent combustible waste. (AC 5.2.3)*

[D] **WHEN** the appropriate actions have been determined,
THEN GO to Step 10.1[15].

[15] **IF** any of the following items are identified during the processing of waste:
- Lead-elemental (e.g., circuit boards)
- Mercury-elemental (e.g., thermometers or switches)
- Batteries (e.g., lead/acid, nickel cadmium, or lithium)
- Light bulbs (i.e., incandescent or fluorescent)
- PCB items (e.g., ballasts, capacitors, or transformers)
- Liquids (any amount not remediated or absorbed)

THEN:

[A] **RECORD** the item descriptive information (item type, size, trade name, if available) in the Comments section of Attachment 1.

NOTE *The Waste Management Coordinator (WMC) may be notified at a time that operationally convenient.*

[B] **NOTIFY** the Waste Management Coordinator (WMC) of items found and whether the items were removed, placed into a separate collection container, or placed into a daughter drum.

NOTE 1 *The WMC can assist with assigning the appropriate RCRA Hazardous Waste Codes to the daughter drum.*

NOTE 2 *The following step may be performed when operationally convenient but must be completed the same day as the identification of the item.*

[C] **ENSURE** that the appropriate RCRA Hazardous Waste Codes is assigned to the drum that receives the item (e.g., daughter drum or collection drum).

10.1 WCG Waste Processing Preparation (continued)

WARNING

Glass sample vials may contain residual granular plutonium hydride which can generate sparks when subjected to mechanical agitation. To reduce the possibility of breaking a glass sample vial and the generation of sparks glass sample vials SHALL be without excessive force. (EP-DIV-REPORT-09)

NOTE *Multiple sections may be performed and repeated in order to completely disposition all of the waste from a parent drum.*

[16] **PERFORM** the following applicable sub-section:
- Section 10.2, Waste Material Greater Than 190 mrem/hr
- Section 10.3, Prohibited Item Disposition
- Section 10.4, Waste Splitting Activities
- Section 10.5, Repackaging Activities
- Section 10.6, Processing Nitrate Salt Drums

10.2 Waste Material Greater Than 190 mrem/hr

The following sub-section provides instructions for the disposition of waste material with an expected dose rate of greater than 190 mrem/hr on contact with the outside of a waste container. Simulating that the waste material is inside of a daughter waste container (e.g., measured through drum lid) is the desired method of determining the expected radiation dose rate of waste material outside of a waste container.

NOTE *Appendix 5, Flowchart for Processing of High Dose Items of Mixed Material Types, illustrates the process for POC operations.*

Waste Handling Technician

[1] **ENSURE** that a POC assembly has been prepared and is available.

[2] **DETERMINE** whether the serial numbers on the pipe component lid and the pipe component are the same.

10.2 Waste Material Greater Than 190 mrem/hr (continued)

[3] **IF** the serial numbers do **NOT** match,
THEN:

[A] **IDENTIFY** (e.g., tag or mark) the POC indicating that the POC is defective.

[B] **SEGREGATE** the POC in order to prevent the item from being used.

NOTE *The NCR may be initiated at a time that is operationally convenient.*

[C] **ENSURE** that an NCR is initiated in accordance with P330-6, Nonconformance Reporting, as required.

[D] **NOTIFY** the WCRRF Operations Center of the discrepancy.

[E] **GO** to Step 10.2[1].

[4] **IF** the POC is to be bagged onto the WCG,
THEN RECORD the following POC bag-on bag information on Attachment 1:
- Manufacturer
- Model Number
- Serial Number
- Date of Manufacture

[5] **PLACE** the POC assembly and shielding near the vicinity of the WCG to provide shielding during bag-off operations <u>or</u> bag-on the POC to the WCG in accordance with Section 8.1, Bag On Daughter Drum, Bagport, or Gloveport; and **RECORD** the POC drum number and POC unique identification number on Attachment 1.

[6] **IDENTIFY** items to be placed into a POC assembly, and **ENSURE** that an item description is recorded on Attachment 1.

[7] **IF** the item is to be bagged off of the WCG <u>and</u> the item is from a waste container with a mixed material type,
THEN:

[A] **REMOVE** any lead shielding from outside of the item, and **PLACE** the lead in a daughter drum.

10.2 Waste Material Greater Than 190 mrem/hr (continued)

[B] **ENSURE** that a description of the item is recorded on Attachment 1.

[C] **BAG OFF** the item in accordance with Section 9.1, WCG Item Bag Out.

[D] **IF** there is no lead shielding inside of the item (container),
THEN PLACE the bagged out item inside a shielded (pewter) container or cover with a lead blanket.

[E] **GO** to Step 10.2[9].

NOTE *Shielded container is only used for the purpose of ALARA and not for final waste packaging.*

[8] **IF** an individual item is to be bagged out of the WCG,
THEN:

[A] **BAG OUT** individual items in accordance with Section 9.1, WCG Item Bag Out.

[B] **PLACE** the bagged out items in shielded (pewter) container or cover with a lead blanket, as required.

NOTE 1 *A POC assembly drum is full when it has reached its weight limit of 547 lb, or is physically full.*

NOTE 2 *Waste placed into daughter drums or Pipe Overpack Containers (POCs) must be from a single parent drum.*

[9] **WHEN** the item is to be placed into a POC,
THEN ENSURE that the item has been removed from the shielded (pewter) container or lead blanket, as necessary.

[10] **PLACE** the items into the POC.

10.2 Waste Material Greater Than 190 mrem/hr (continued)

[11] **IF** the POC assembly is **NOT** full,
AND the parent drum is still being processed,
AND the POC assembly is **NOT** bagged onto the WCG,
THEN:

[A] **ALIGN** the lid holes with the holes in the pipe component body.

[B] **HAND-THREAD** the lid bolts as far as possible.

[C] **REPLACE** the fiberboard packaging, being careful to match the pipe bolt heads, hoist ring, and filter with cutouts in fiberboard.

[D] **REPLACE** the spacers, liner lid, and drum lid.

[E] **IF** there are additional 190 mrem/hr items to be bagged out of the WCG, **THEN GO** to Step 10.2[7].

[12] **IF** the POC is bagged onto the WCG,
THEN bag-off the POC in accordance with Section 8.2, Bag Off Daughter Drum

[13] **CLOSE** the POC assembly in accordance with the manufacturer's instructions and **DOCUMENT** (initials and Z number) that the POC assembly has been closed in accordance with the manufacturer's instructions on Attachment 1.

[14] **WEIGH** the POC assembly, and **RECORD** the POC Assembly Gross Weight on Attachment 1.

[15] **REQUEST** an RCT perform a radiation survey of the POC, and **RECORD** the POC radiation survey results on Attachment 1.

[16] **IF** the following requirements are **NOT** satisfied:
- External surface radiation dose rates less than 200 mrem/hr (DOE/WIPP-02-3122)
- Gross weight less than 547 lb for a 12 in. POC (CH-TRAMPAC)

THEN NOTIFY the WCRRF Operations Center of the discrepancy, and **REQUEST** the applicable actions.

[17] **LABEL** the POC assembly drum in accordance with EP-DIV-DOP-20043, LTP TRU Waste Container Labeling.

10.2 Waste Material Greater Than 190 mrem/hr (continued)

[18] **IF** all of the waste in the parent drum has **NOT** been dispositioned,
THEN GO to the appropriate sub-section to complete processing the remaining waste.

[19] **GO** to Section 11.1, Disposition.

10.3 Prohibited Item Disposition

The following sub-section provides instructions for the disposition of waste material that is considered to be prohibited items at WIPP.

NOTE 1 *The following activities associated with sorting parent drum waste such as the disposition of liquids, pressurized containers, and PCB-contaminated waste may be performed simultaneously or in any order.*

NOTE 2 *The Hold Tag for CCP NCRs is removed from the parent drum and returned to CCP personnel.*

NOTE 3 *A completed PID package includes the following documents:*

- *Attachment 1, WCRRF WCG Waste Processing Data Sheet*
- *Attachment 6, WCRRF Prohibited Item Collection Drum Data Sheet*
- *EP-WCRR-WO-DOP-0221 Attachment 1, Checklist for the Preparation of a New 55-Gallon Drum Assembly*
- *EP-WCRR-WO-DOP-0221 Attachment 2, Checklist for the Closing of a 55-Gallon Drum Assembly*
- *WDP Waste Remediation Safety Evaluation Data Sheet (EP-DIV-AP-0107 Attachment 1)*

Waste Handling Technician

[1] **LOCATE** any contained, uncontained, or free liquids.

NOTE 1 *Waste containers with liquids (any amount or configuration) that have <u>not</u> been solidified (absorbed) must be managed on secondary containment pallets and have a FREE LIQUID label affixed.*

NOTE 2 *By absorbing all liquids the resulting daughter drum is <u>not</u> required to be stored on a secondary containment pallet.*

[2] **IF** liquid is identified inside of transparent or opaque containers that is <u>less than or equal to</u> 60 ml in the containers,
AND the liquid is **NOT** to be absorbed,
THEN PLACE the containers with liquids into the daughter drum.

10.3 Prohibited Item Disposition (continued)

[3] **IF** liquid is identified inside of a transparent or opaque containers (e.g., contents adequately labeled),
THEN:

[A] **RECORD** the approximate liquid volume on Attachment 1.

[B] **OPEN** the containers.

[C] **PERFORM** a pH test of the liquid using Litmus Paper.
- Acid (less than 7)
- Caustic (base – greater than 7)

[D] **OBTAIN** the appropriate absorbing agent, and **PLACE** the absorbent into a compatible container (e.g., bottle or bag) that has a volume of less than 4 Liters.

NOTE *Multiple containers of less than 4 liters may be required in order to absorb all of the free liquid.*

[E] **TRANSFER** the liquid into the compatible container (e.g., bottle or bag), and **PLACE** the container (e.g., bottle or bag) inside of the daughter drum.

NOTE *Waste containers with liquids (any amount or configuration) that have <u>not</u> been solidified (absorbed) must be managed on secondary containment pallets and have a FREE LIQUID label affixed.*

[4] **IF** liquid is identified in transparent containers or in opaque containers that **CANNOT** be safely opened (e.g., contents adequately labeled),
THEN:

[A] **PLACE** the containers into the daughter drum.

NOTE *The NCR may be initiated at a time that is operationally convenient.*

[B] **ENSURE** that an NCR is initiated in accordance with P330-6.

10.3 Prohibited Item Disposition (continued)

[C] **NOTIFY** the WCRRF Operations Center of the discrepancy, and **DOCUMENT** in the Comments section of Attachment 1.

NOTE *Liquids are not to be combined or bulked.*

[5] **IF** any free liquid is identified,
THEN:

[A] **DETERMINE** the approximate volume of liquid, and **DOCUMENT** the approximate amount of liquid on Attachment 1.

[B] **PERFORM** a pH test on the liquid using Litmus Paper.

[C] **OBTAIN** the appropriate absorbing agent, and **PLACE** the absorbent in a compatible container (e.g., bottle or bag) that has a volume of less than 4 Liters.

[D] **ADD** a small amount of the free liquid to the container (e.g., bottle or bag).

[E] **IF** any reaction occurs between the absorbent and the free liquid,
THEN:

[a] **STOP** the addition work activities.

[b] **NOTIFY** the WCRRF Operations Center of the condition, and **REQUEST** the applicable actions.

[c] **DOCUMENT** the notifications and actions in the Comments section of Attachment 1.

NOTE *The NCR may be initiated at a time that is operationally convenient.*

[d] **ENSURE** that an NCR is initiated in accordance with P330-6.

10.3 Prohibited Item Disposition (continued)

NOTE *Multiple containers (e.g., bottle or bag) of less than 4 liters may be required in order to absorb all of the free liquid.*

[F] **IF** processing Nitrate Salts with free liquids,
THEN GO **to** Sub-section 10.6, Processing Nitrate Salt Drums.

[G] **MIX** the absorbent with the waste.

[H] **ENSURE** absorbent is thoroughly mixed with the liquid.

NOTE *Absorbing waste containers that are categorized as Nitrate Salts will generate additional daughter drums due to the amount of absorbent required to solidify the waste.*

[J] **PLACE** the container(s) (e.g., bottle or bag) inside of the daughter drum.

[I] **REPEAT** Step 10.3[5] until all liquids have been absorbed.

NOTE *Appendix 4, Volumes of Cylindrical Inner Containers Near 4 Liters, can be used to help determine whether a container is greater than 4 liters.*

[6] **LOCATE** sealed, unpressurized containers greater than 4 liters (that do not contain any liquid), and **DISPOSITION** the container as follows:

[A] **REMOVE** the tape, lid, cap, stopper, or other appropriate method.

[B] **PLACE** the dispositioned items into the daughter drum.

[7] **LOCATE** opaque or non-penetrable item (that do not contain any liquid), and **DISPOSITION** the container as follows:

10.3 Prohibited Item Disposition (continued)

[A] **DESCRIBE** in detail (e.g., size, shape, labeling, weight, material) the opaque or non-penetrable items on Attachment 1.

[B] **PLACE** the dispositioned items into the daughter drum.

[8] **LOCATE** potentially pressurized containers, and **DISPOSITION** the container as follows:

[A] **IF** there is evidence that a potentially pressurized container has been previously punctured and is empty,
THEN:

[a] **PLACE** a metal rod or equivalent (item found in the waste) inside the container and **SECURE** with tape, or **ENLARGE** the hole to be visible by Radiography.

[b] **PLACE** the container inside the daughter drum.

[B] **IF** a potentially pressurized container is **NOT** punctured,
THEN:

[a] **DECONTAMINATE** (wipe down) the potentially pressurized container.

[b] **BAG OUT** the potentially pressurized container in accordance with Section 9.1, WCG Item Bag Out.

[c] **PLACE** an Item Identification (ID) Number on the potentially pressurized container or bagout bag.

NOTE 1 *A collection drum for pressurized containers and aerosol cans will be established and placed inside one of the WCRRF Transportainers (TSDF).*

NOTE 2 *Pressurized cylinders and aerosol cans must be collected in separate drums (e.g., on collection drum for pressurized cylinders and one collection drum for aerosol cans. All other prohibited items that cannot be remediated must be collected in a separate (third) collection drum.*

[d] **PLACE** the potential pressurized container in a designated collection drum.

10.3 Prohibited Item Disposition (continued)

[e] **ENSURE** that the following information is recorded on Attachment 6 for each item:

- Collection drum number
- Collection drum type (pressurized container, aerosol, or other)
- Date collection drum waste created
- Date item is added to the collection drum
- Item Identification Number
- Parent Container Number
- Parent Accumulation Start Date
- Parent EPA Codes
- Item Description
- Item Shape
- Item Size
- Item Labeling
- Item Weight (lb)
- Initials and Z number

NOTE *The hazardous waste label may need to be replaced in order to ensure that all information is added and legible.*

[f] **ENSURE** that the accumulation start date on the collection drum reflects the earliest parent drum accumulation start date recorded on Attachment 6.

[g] **ENSURE** that all EPA Codes from the associated parent drums are documented on the collection drum hazardous waste label.

[9] **IF** any polychlorinated biphenyls (PCB)-contaminated waste is identified, **THEN:**

[A] **DESCRIBE** in detail (e.g., size, shape, labeling, weight, material) the PCB-contaminated waste on Attachment 1.

NOTE *The following step may be performed when operationally convenient.*

[B] **ATTACH** a PCB Item ID Number to the drum receiving the PCB waste (above the top rolling hoop and cover with clear tape), and **RECORD** the PCB Item ID Number on Attachment 1.

10.3 Prohibited Item Disposition (continued)

[C] **PLACE** the PCB-contaminated waste into a daughter drum.

[10] **DOCUMENT** a description of the type of remaining waste added to each daughter drum during the processing of waste from a parent drum on Attachment 1.

[11] **REPEAT** Steps 10.3[2] though 10.3[10] as necessary to completely resolve any PIDs within the parent drum.

[12] **IF** all of the waste in the parent drum has **NOT** been dispositioned,
THEN GO to the appropriate sub-section to complete processing the remaining waste.

NOTE *The following step may be performed out of sequence.*

[13] **DETERMINE** the level of waste placed into the daughter drum, and **RECORD** the Daughter Drum % Full value (%) on Attachment 1.

[14] **BAG OFF** waste containers in accordance with Section 7.2, Parent Drum Bag Off; and Section 8.2, Bag Off Daughter Drum.

[15] **GO** to Section 11.1, Disposition.

10.4 <u>Waste Splitting Activities</u>

The following steps provide instructions for the disposition of waste material with a PE-Ci value that requires the waste material to be divided into multiple daughter drums.

This sub-section is performed following the assaying of the parent drum and the determination of the number of daughter drums to be generated from the parent drum.

Waste Handling Technician

[1] **CAREFULLY REMOVE** a portion of the parent drum's contents (waste items).

[2] **NOTIFY** the Assay Personnel of the estimated weight of the items, as requested.

[3] **PLACE** the waste items into the WCG metal bucket.

[4] **LOWER** the metal bucket into the <u>east</u> daughter drum (closet to airlock).

10.4 Waste Splitting Activities (continued)

Assay Personnel

[5] **PERFORM** a radiological assay of the material in the east daughter drum in accordance with an approved procedure.

Waste Handling Technician

[6] **IF** the assay is higher than desired,
THEN:

[A] **LIFT** the metal bucket out of the east daughter drum.

[B] **REMOVE** some of the metal bucket contents.

[C] **GO** to Step 10.4[4].

[7] **LIFT** the metal bucket out of the east daughter drum.

NOTE *Waste placed into daughter drums or Pipe Overpack Containers (POCs) must be from a single parent drum.*

[8] **PLACE** the waste material into the west daughter drum (farthest from airlock)

[9] **REPEAT** Steps 10.4[1] through 10.4[8] until the desired radiological assay value is reached in the west daughter drum (farthest from airlock).

NOTE *The following step may be performed out of sequence.*

[10] **DETERMINE** the level of waste placed into the daughter drums, and **RECORD** the Daughter Drum % Full value (%) on Attachment 1.

[11] **BAG OFF** the west daughter drum (farthest from airlock) in accordance with Section 8.2, Bag Off Daughter Drum.

NOTE *Steps 10.4[12] and 10.4[13] may be performed in any order or concurrently.*

[12] **BAG ON** a new-west daughter drum (farthest from airlock) in accordance with Section 8.1, Bag On Daughter Drum, Bagport, or Gloveport.

10.4 Waste Splitting Activities (continued)

[13] **REPEAT** Steps 10.4[1] through 10.4[12] until all material within the parent drum has been processed.

[14] **WHEN** assaying of waste at the WCG is complete,
THEN ENSURE that the assaying equipment is removed from the WCG Exclusion Zone.

[15] **IF** all of the waste in the parent drum has **NOT** been dispositioned,
THEN GO to the appropriate sub-section to complete processing the remaining waste.

[16] **GO** to Section 11.1, Disposition.

10.5 Repackaging Activities

Waste Operator

[1] **REMOVE** waste items from the parent drum.

NOTE *Waste placed into daughter drums or Pipe Overpack Containers (POCs) must be from a single parent drum.*

[2] **PLACE** the waste items into a daughter drum.

[3] **DOCUMENT** any waste added during the processing of waste from a parent drum on Attachment 1.

NOTE *The following step may be performed out of sequence.*

[4] **DETERMINE** the level of waste placed into the daughter drums, and **RECORD** the Daughter Drum % Full value (%) on Attachment 1.

[5] **BAG OFF** the parent and daughter drums from the WCG in accordance with Section 7.2, Parent Drum Bag Off; and Section 8.2, Bag Off Daughter Drum.

[6] **IF** all the waste in the parent drum has **NOT** been dispositioned,
THEN GO to the appropriate sub-section in this procedure to complete processing of the remaining waste.

[7] **GO** to Section 11.1, Disposition.

10.6 Processing Nitrate Salt Drums

The following sub-section provide additional instructions for the disposition of Nitrate Salt drums that requires the waste material to be mixed with absorbent material at a ratio of a minimum of 1.5 absorbent to 1 part nitrate salt.

[1] **REMOVE** the waste items from the parent drum.

[2] **DOCUMENT** any waste added during the processing from the parent drum on Attachment 1.

[3] **ENSURE** an organic absorbent (Kitty Litter/Zeolite® absorbent) is added to the waste material at a minimum of 1.5 absorbent to 1 part waste ratio.

[4] **ENSURE** absorbent (Kitty Litter/Zeolite® absorbent) is thoroughly mixed with the Nitrate salt material.

[5] **PLACE** process waste into Daughter drum.

[6] **REPEAT** Steps 10.6[1] through10.6[5] for all Nitrate salt processing.

[7] **REMEDIATE** the contents of the parent drum for other items as applicable.

NOTE *Absorbing waste containers that are categorized as Nitrate Salts will generate additional daughter drums due to the amount of absorbent required to solidify the waste.*

[8] **DETERMINE** the level of waste placed into the daughter drums, and **RECORD** the Daughter Drum % Full value (%) on Attachment 1.

[9] **BAG OFF** the parent and daughter drums from the WCG in accordance with Section 7.2, Parent Drum Bag Off; and Section 8.2, Bag Off Daughter Drum.

[10] **CLOSE** the daughter drum in accordance with EP-WCRR-WO-DOP-0221, Preparing and Closing 55-Gallon Daughter drum Assemblies.

11. POST-PERFORMANCE ACTIVITY

11.1 Disposition

Waste Handling Technician

[1] **SIGN** and **DATE** the applicable attachments.

Cognizant System Engineer

[2] **IF** UNSAT was checked on Attachment 5,
THEN:

[A] **PERFORM** an Immediate Operability Determination (IOD) in conjunction with the SOM in accordance with AP-341-516, Operability Determination and Functionality Assessment.

[B] **IF** the IOD is that the Structure, System, and Component (SSC) is operable, **AND** information is available that could change the outcome of the IOD, **THEN PERFORM** an Prompt Operability Determination for the deficiency in accordance with AP-341-516.

[C] **NOTIFY** the applicable Operations Center and SOM of the operability determination, as applicable.

[D] **PRINT, SIGN, Z number** and **DATE** Attachment 5.

SOS or designee

[3] **IF** a Fire Watch was stationed,
THEN ENSURE all INVENTORY is in a safe configuration, and **SECURE** the Fire Watch, and **CHECK** (√) YES or NO on Attachment 1.

[4] **REVIEW** the applicable attachments for accuracy and completeness.

[5] **IF** any discrepancies are identified,
THEN RESOLVE the discrepancies with the original surveillant to correct the documentation.

11.1 Disposition (continued)

[6] **IF** Attachment 5 was completed,
THEN:

[A] **CHECK** (√) YES or NO to indicate whether the applicable acceptance criteria is satisfied on Attachment 5.

[B] **IF** the applicable acceptance criteria is **NOT** satisfied,
THEN:

[a] **ENSURE** that the applicable TSR actions have been implemented.

[b] **ENSURE** that the actions of EP-DIV-AP-13, EWMO TSR-Related Operational Limits Actions Compliance Tracking, have been implemented.

[c] **ENSURE** that the WCRRF Operations Center, SOM and EWMO Facility Operations Director (FOD) have been notified of the discrepancy.

[7] **PRINT, SIGN,** and **RECORD** Z#, Date/Time on the applicable attachments.

[8] **FORWARD** the applicable attachments to the WCRRF Operations Center.

[9] **ENSURE** that the Administrative Control Lock Log Sheet form, lock and key are returned to WCRRF Operation Center.

[10] **IF** a prohibited item collection drum was brought into TA-50-69,
AND waste processing is complete,
THEN ENSURE that the prohibited item collection drum is moved out of TA-50-69.

NOTE *Completing a Post-Job Review may be accomplished using the applicable P300 form or online (the preferred method since the institution has access to feedback and lessons learned http://int.lanl.gov/safety/iwmc/ [Click on the Submit IWD Part 4, Post-Job Review]).*

[11] **IF** any of the following occur:

- A new activity was completed for the first time
- A request was made by anyone involved with the performance of this procedure to perform a post-job review
- An abnormal event occurred
- A revision to an existing procedure was issued and it has been determined by the procedure owner or designee that a Post-Job Review is required

THEN PERFORM a Post-Job Review in accordance with P300.

11.1 Disposition (continued)

[12] **IF** the Post-Job Review identified any necessary changes to this procedure, **THEN INITIATE** a revision to this procedure.

11.2 Records Processing

Waste Handling Technician or Supervision

[1] Disposition records in accordance with the following:

Record Identification	Record Type Determination	Protection/Storage Method	Processing Instructions
Attachment 1, WCRRF WCG Waste Processing Data Sheet Attachment 2, WCRRF WCG Critical Lift Plan Concurrence Sheet Attachment 3, WCRRF WCG Drum Lift Inspection Data Sheet Attachment 4, WCRRF WCG Breaching (Opening) Unvented, Sealed Waste Packages Checklist Attachment 5, WCRRF WCG Breaching (Opening) Metal 5- to 30 gal Unvented, Sealed Waste Package Surveillance Attachment 6, WCRRF Prohibited Item Collection Drum Data Sheet	Quality Assurance (QA) Record	Supervision **SHALL** implement a reasonable level of protection to prevent loss and degradation. Records should be maintained in a one-hour fire rated metal file cabinet when not in use. The instructions in this section may vary depending on the record such as some records may be retained in an Operations Center for a period of time (e.g., 1 year) in order to provide trending data or evidence of compliance.	When the records are ready for final disposition, the record is transferred to Records Management in accordance with EP-DIR-AP-10003, Records Management Procedure For ADEP Employees.

12. REFERENCES

ABD-WFM-006, Technical Safety Requirements (TSRs) for Waste Characterization, Reduction, and Repackaging Facility (WCRRF)

AP-341-516, Operability Determination and Functionality Assessment

CCP-TP-113, CCP Standard Waste Visual Examination

CH-TRAMPAC, Contact Handled – Transuranic Waste Authorized Methods for Payload Control

DOE/WIPP-02-3122, Transuranic Waste Acceptance Criteria For Waste Isolation Pilot Plant

EP-DIV-AP-0112, WDP Pre-Job Briefings

EP-DIV-AP-13, EWMO TSR-Related Operational Limits Actions Compliance Tracking

EP-DIV-AP-20047, LTP Glovebox/Glovebag and Glove Safety Program

EP-DIV-AP-0107, WDP TRU Waste Container Management Operations

EP-DIV-AP-0108, LTP Waste Record (TWSR/WDR) Initiation and Label Creation

EP-DIV-AP-0117, WDP Division Forms

EP-DIV-AP-0120, EWMO Watchbill Administration

EP-DIV-Policy-20057, EWMO Health and Safety Policy-Manual Movement

EP-DIV-REPORT-09, Engineering Path Forward Report for CMR Wing 2 Containers

EP-DIR-AP-10003, Records Management Procedure For ADEP Employees

EP-WCRR-FO-DOP-0201, WCRRF and Building TA-50-69 TSR Mode Change

EP-WCRR-RM-AOP-0208, Special Shapes

EP-WCRR-WO-DOP-0221, Preparing and Closing 55-gal Daughter Drum Assemblies

EP-WCRR-WO-DOP-0236, WCRRF Loading/Unloading SWB or 85-gal Drum

12. REFERENCES (continued)

EP-WCRR-WO-DOP-0239, Verifying WCRRF Scales

EWMO-DO-07-042, Memo. Dtd. Jul 6 ,2007, WCRRF Pu-238 Glovebag Issue

Form 1489, Pre-Operational Inspection Record for Overhead Cranes and Hoists

P101-18, Procedure for Pause/Stop Work

P101-25, Cranes, Hoists, Lifting Devices, and Rigging Equipment

P121, Radiation Protection

P330-6, Nonconformance Reporting

APPENDIX 1
Page 1 of 3

WASTE DRUM CRITICAL LIFT PLAN

Purpose

This critical lift plan is used for loading degraded or loss of integrity drums or drums that satisfy the critical lift requirements of P101-25 with the WCG Drum Lift as required by ABD-WFM-006, Technical Safety Requirements (TSRs) for Waste Characterization, Reduction, and Repackaging Facility (WCRRF). This critical lift plan must be used to lower degraded drums with waste material using the WCG Drum Lift. This plan will be used to handle and prepare waste drums at Area-G and at WCRRF for a critical lift.

General Guidelines/Notes

This critical lift plan has been prepared in accordance with P101-25, Cranes, Hoists, Lifting Devices, and Rigging Equipment.
Drum handling operations involving degraded/loss of integrity drums or drums that satisfy the requirements for a critical lift in accordance with P101-25 (e.g., drums weighing greater than 468 lb) at WCRRF are performed using approved procedures and lifting equipment specifically designed for this operation.
The following information **SHALL** be reviewed during the critical lift pre-job brief:

1. All lifting and signaling **SHALL** be performed by a qualified operator. Supervision will be by a designated Qualified Crane Operator and Rigger Person-In-Charge (PIC) and documented on the WCRRF WCG Critical Lift Plan Concurrence Sheet.

2. The WCG Drum Lift and drums **SHALL** be visually inspected by the operator and/or qualified PIC. Any noted substandard item **SHALL** be cause for suspending operations until an acceptable replacement is acquired.

3. The rigging procedure **SHALL** be followed. Where changes are required due to site conditions, the changes **SHALL** be reviewed and approved by the Qualified Crane Operator and Rigger PIC.

4. The weight of the load **SHALL** include the 55 gal drum and lead blankets (if used for shielding purposes). In no case should the lift exceed 624 lb.

5. Communications between the WCG pendant operator and PIC **SHALL** be clear and unobstructed. The primary system **SHALL** be voice communications. Only designated, qualified signalers **SHALL** give signals to the operator. However, the operator **SHALL** obey a stop signal at all times, no matter who gives the signal.

6. <u>A pre-lift meeting with all responsible persons **SHALL** be held before the lifts and each person **SHALL** be assigned specific duties and sign the pre-job sheet.</u>

7. The equipment to be used for this lift will be as applicable: WCG Drum Lift.

APPENDIX 1
Page 2 of 3

Project Notes and Specifications

1. The primary goal is to perform a safe lift in a timely manner.
2. This lift has been frequently performed with equipment stated in this plan. A preliminary lift is not required but if any discrepancies are noted during the lift, the project **SHALL** be stopped and re-evaluated by the Qualified Operator, and Qualified Crane Operator and Rigger PIC.
3. The drum **SHALL** be positioned secured in the WCG Drum Lift to facilitate SAFE and efficient operation. The drum lift pendant operator **SHALL** announce operation of the lift before commencing raising/lowering of the drum and all personnel **SHALL** stand clear and to the side of drum movement. The work area for assembling the payload **SHALL** be limited to personnel necessary for the operation. (Example: Operator, signal personnel, PIC, and RCTs.)
4. The lift requires understanding by the entire crew. This lift plan **SHALL** be thoroughly reviewed by the personnel performing the lift and the Critical Lift / Pre-Lift Meeting **SHALL** be conducted before the lift to ensure that all personnel are aware of their assigned duties. Each person involved in the lift must attend the meeting and sign the attendance sheet.

Competent Person / Lift Supervisor

The responsible person for this lift is the designated Qualified Crane Operator and Rigger PIC.

Emergency Action Plan

1. In the event that an emergency occurs, all operations **SHALL** be discontinued and any raised load **SHALL** be lowered/secured, if possible. For specific casualties, operators will also perform required actions of applicable procedures in the WCRRF Response Manual.
2. Each portion of the lift presents a slightly different set of variables as related to a direction and area where the components may be set down temporarily during an emergency.
3. During the pre-lift meeting the operators, riggers, and spotter are to specifically discuss emergency actions at various points during the lift. If the raised load has to be secured the operator will do so and contact the RCT and Qualified Crane Operator and Rigger PIC. All non-essential personnel are to be kept clear of the lift area.
4. The operator and rigging personnel will not resume the lift operations without approval from the RCT and the Qualified Crane Operator and Rigger PIC.
5. In the event of an equipment malfunction and the drum cannot be lowered/secured:
   - The operation will be placed in a safe configuration.
   - The waste will be unloaded from the drum and the drum will be manually removed from the drum lift, if possible, or the CSE will be notified for the applicable actions.

Hazard Assessment

This lift has been reviewed in great detail to ensure a safe lift and minimize hazards. The following items have been identified as unique for this lift.

In no case **SHALL** material being lifted weigh more than 624 lb. (drum + lead shielding).

APPENDIX 1
Page 3 of 3

Test Lift—A test lift is not required for this operation.
Travel Path—At the pre-job/lift briefing a spotter(s) **SHALL** be designated to observe the load along the entire travel path (consider slopes and uneven surfaces).

Overhead Instructions—The Qualified Crane Operator and Rigger PIC and rigging crew **SHALL** physically verify the travel path is clear of overhead obstructions before beginning the lift.

Working Around the Load (Cone of Safety) - Absolutely NO ONE **SHALL** be under the load, or while it is being raised, lowered, or moved. The Qualified Crane Operator and Rigger PIC **SHALL** ensure that the area (in front of the WCG Drum Lift) is clear of non-essential personnel. Specific placement of operators and RCTs **SHALL** be established during the pre-lift meeting.

Securing the Drum Lifting Assembly—The rigging crew s **SHALL** inspect the WCG Drum Lift before lifting a drum.

Equipment List

Ensure the following equipment is present, has undergone physical inspection, is properly calibrated and is ready to support the critical lift steps:

- WCG Drum Lift

Work Steps for Loading a 55 Gallon Drum Using the WCG Drum Lift

Step 1 Verify the drums weighs less than 624 lb.

Step 2 Obtain key from key box, Insert key, and turn on the power to the drum lift.

Step 3 Using the drum lift pendent, lower the drum lift to the lower limit switch or until the bellyband of the lift cradle can grasp the drum evenly.

Step 4 Position the drum on the drum lift with the drum bolt ring accessible for lid removal when inside the glovebox.

Step 5 Close and secure the bellyband, ensuring the bag-off sleeve does not get caught on the bellyband.

Step 6 Raise the drum to the horizontal port and stop, leaving an adequate gap (approximately 12 inches) to mount the bag-off sleeve to the horizontal port.

Step 7 Bag on the parent drum in accordance with this procedure.

Step 8 Turn off the power to the drum lift, remove key, and place in key box.

APPENDIX 2
Page 1 of 1

WCRRF ALLOWED CONTAINER TYPES FOR REMEDIATION

The following "allowed" container types may be remediated in the WCRRF glovebox because there is no concern for hydrogen buildup within the container:

- Containers without a gasket (e.g. containers with slip lids, paint cans, "produce cans" and other similar containers) of any size
- Containers of any size with slip-on lids (with or without a gasket)
- Empty containers of any size
- Fiber board containers of any size
- Sealed containers of any size not containing TRU waste or free liquids
- Any containers with a volume < (less than) 4 liters
- Unvented 5- to 30-gal waste packages

APPENDIX 3
Page 1 of 1

EXAMPLE PREOPERATIONAL INSPECTION RECORD FOR OVERHEAD CRANES AND HOISTS

NOTE: Use these buttons to print or save the form, DO NOT use the browser tool bar. SAVE PRINT

Form 1489

Los Alamos NATIONAL LABORATORY EST. 1943

Preoperational Inspection Record for Overhead Cranes and Hoists

Inspector	Date Inspected	Location
Manufacturer and Type		Serial Number and Rated Capacity

Current Inspections			
• Current Annual ANSI/OSHA Inspection	Date:		
• Current Annual Mechanical and Electrical (*if applicable*) PM's	Date:		
• Current Monthly Inspection	Date:		
Main or Auxiliary Hoist Rope			
• Is there any distortion such as kinking, crushing, unstranding, bird-caging, heat damage, or core protrusion?	☐ Yes	☐ No	☐ N/A
• Are there six randomly distorted broken wires per rope lay or three broken wires per strand per rope lay?	☐ Yes	☐ No	☐ N/A
• Is there wear of 1/3 the original diameter of outside individual wires?	☐ Yes	☐ No	☐ N/A
Load Chain			
• Is there elongation or distortion?	☐ Yes	☐ No	☒ N/A
• Any twisting, corrosion, pitting, or discoloration?	☐ Yes	☐ No	☒ N/A
• Any gouges, nicks, or weld splatter?	☐ Yes	☐ No	☒ N/A
Spooling, Reeving			
• Is there cross-winding?	☐ Yes	☐ No	☐ N/A
• Are the rope stays together and in alignment?	☐ Yes	☐ No	☐ N/A
• Is there any double winding or overwinding?	☐ Yes	☐ No	☐ N/A
• Is there minimum of two wraps at lowest position?	☐ Yes	☐ No	☐ N/A
Anchoring			
• Anchoring secured or installed in accordance with manufacturer's recommendations?	☐ Yes	☐ No	☐ N/A
• Is there minimum of two wire rope clips?	☐ Yes	☐ No	☒ N/A
Main or Auxiliary Hook			
• Is the throat opening not greater than 15% of normal?	☐ Yes	☐ No	☒ N/A
• Is there less than ten degree twist out of plane?	☐ Yes	☐ No	☒ N/A
• Any deformities or cracks?	☐ Yes	☐ No	☒ N/A
• Are the safety latches present and functional?	☐ Yes	☐ No	☒ N/A
Markings			
• Are the rated capacities conspicuously posted?	☐ Yes	☐ No	☐ N/A
• Are the controllers properly marked? Are remote crane controllers affixed a label which contains the following information? (crane manufacturer, location, and other information specific to the unit being operated)	☐ Yes	☐ No	☐ N/A
• Is the main disconnect properly marked?	☐ Yes	☐ No	☐ N/A
Are the items listed functional?			
• Brakes	☐ Yes	☐ No	☐ N/A
• Controllers	☐ Yes	☐ No	☐ N/A
• Limit switches	☐ Yes	☐ No	☐ N/A
• Lights, warning devices	☐ Yes	☐ No	☒ N/A
• Trolley	☐ Yes	☐ No	☐ N/A
• Bridge	☐ Yes	☐ No	☒ N/A
• Main or auxiliary load	☐ Yes	☐ No	☐ N/A
Remarks:			

Form 1489 (12/10)

EXAMPLE

APPENDIX 4
Page 1 of 1

VOLUMES OF CYLINDRICAL INNER CONTAINERS NEAR 4 LITERS

Diameter		Height		Volume (liters)
3”	7.6 cm	12”	30.5 cm	< 4
3”	7.6 cm	18”	45.7 cm	< 4
4”	10.7 cm	12”	30.5 cm	< 4
4”	10.7 cm	18”	45.7 cm	> 4
4.5”	11.4 cm	12”	30.5 cm	< 4
4.5”	11.4 cm	14”	35.6 cm	< 4
4.5”	11.4 cm	16”	40.6 cm	> 4
4.5”	11.4 cm	18”	45.7 cm	> 4
5”	12.7 cm	8”	20.3 cm	< 4
5”	12.7 cm	10”	24.5 cm	< 4
5”	12.7 cm	12”	30.5 cm	> 4
5”	12.7 cm	14”	35.6 cm	> 4
5.5”	14 cm	8”	20.3 cm	< 4
5.5”	14 cm	10”	24.5 cm	> 4
5.5”	14 cm	12”	30.5 cm	> 4
6”	15.2 cm	8”	20.3 cm	> 4
6”	15.2 cm	10”	24.5 cm	> 4
6.5”	16.5 cm	8”	20.3 cm	> 4
7”	17.8 cm	6.5”	16.5 cm	> 4

<4 = less than 4 liters and does <u>not</u> require remediation

> 4 = greater than 4 liters and requires remediation

APPENDIX 5
Page 1 of 1

FLOWCHART FOR PROCESSING OF HIGH DOSE ITEMS OF MIXED MATERIAL TYPES

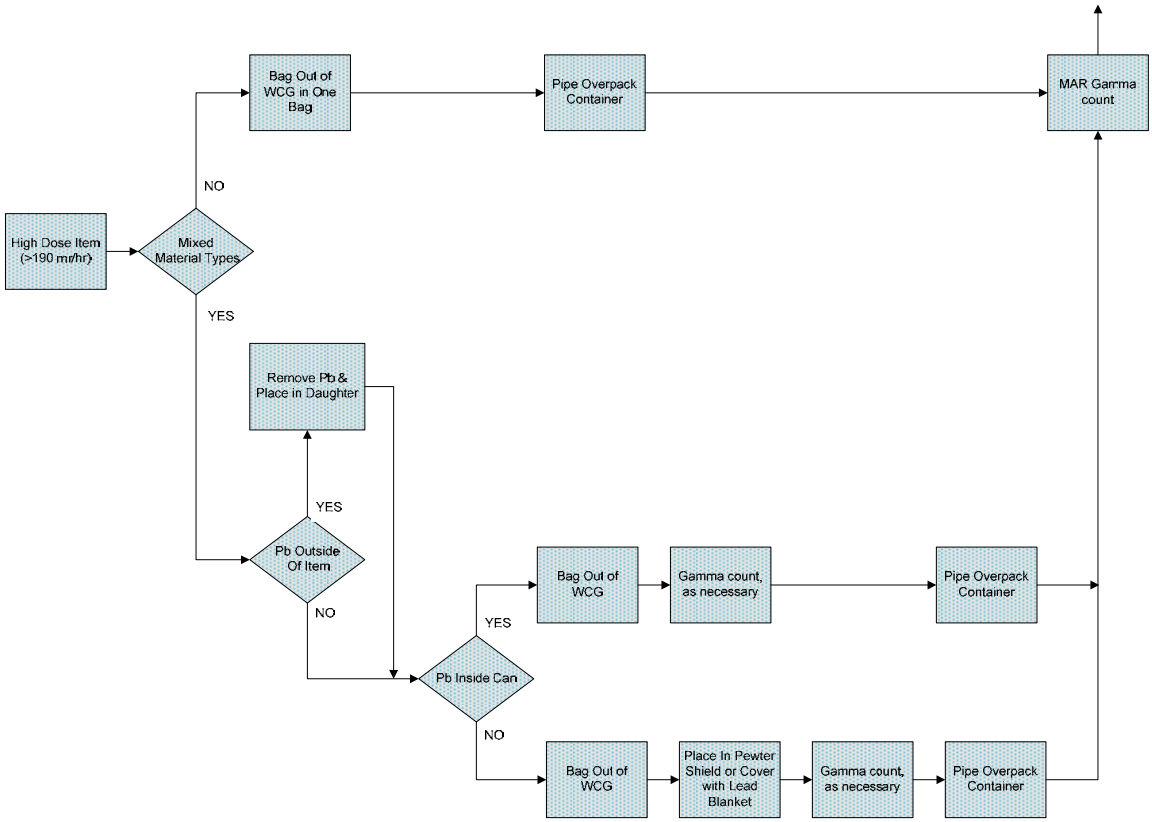

APPENDIX 6
Page 1 of 1

ADMINISTRATIVE CONTROL LOCK LOG SHEET

(Used when needed to track component manipulation)

NOTE: Refer to P315, Conduct of Operations Manual, Attachment 8, Section 8.1.5, for additional guidance.

Facility/Location: _____

Component No.	Authorized By (Shift Mgr.)	New Position	Positioned By	Verified By	Date/ Time	Restored By	Verified By	Date/ Time	Authorized By (Shift Mgr.)

ATTACHMENT 1
Page 1 of 4

WCRRF WCG WASTE PROCESSING DATA SHEET

4.1[6][B] Parent Waste Container No.: _____

6.2[4] Date Processed: _____

4.1[6][B] Processing Activity (EP-DIV-AP-0107):
☐ > 190 mrem/hr ☐ PID ☐ Split ☐ Repack

4.1[6][B] Prohibited Items:
☐ Sealed Containers > 4L ☐ Liquids ☐ Pressurized Containers ☐ N/A

4.1[6][B] Parent Waste Container RCRA Designations: _____

4.1[7] Activity Hazard Classification based on Anticipated Extremity Radiation Dose Rate:
☐ Moderate (≤ 10 rem/hr) ☐ High/Complex (> 10 rem/hr)

4.3[1]/4.3[2] **($)** TA-50-69 is in the OPERATION or WARM STANDBY MODE (TSR 1.2) ☐ OPERATIONS ☐ WARM STANDBY ☐ N/A

4.3[4][B] Platform Scale: Equipment No.: _____
Cal. Due Date: _____

4.3[5][B] **($)** Three 1-Liter containers carbon spheroids or MET-L-X in WCG: (SAC 5.10.1.7.1) ☐ YES ☐ NO ☐ N/A

4.3[6] **($)** Stationary Fire Watch has been established:
(> 300 PE-Ci Equivalent Combustible)
(SAC 5.10.1.7.2) _____
(Initial and Date)

4.3[7 [A] Parent Waste Container degraded, loss of integrity, or weighs greater than 468 lb but less than or equal to 624 lb:
☐ YES ☐ NO ☐ N/A

4.3[8][D] WCG glove and bag-in/bag-out bag inspection: ☐ SAT ☐ UNSAT ☐ N/A

Performed By: _____ / _____ / _____ / _____
Waste Handling Tech (print) Signature Z # Date

ATTACHMENT 1
Page 2 of 4

4.1[6][B] Parent Waste Container No.: _____

5.[18] Prepared Parent Drum Weight (lb) including items secured to drum top, as applicable: _____ lb

6.2[5][A] Parent Drum Lead Blanket Weight (lb): _____ lb

6.2[5][B]/ 6.2[6] Total Parent Drum Weight (lb) _____ lb

6.2[7] **($)** Total Parent Drum Weight < 624 lb (SR 4.5.1): ☐ SAT ☐ UNSAT

6.2[28] Approval to leave a parent drum attached to the WCG overnight:

EWMO-FOD (print)	/ Signature	/ Z #	/ Date

ATTACHMENT 1
Page 3 of 4

4.1[6][B] Parent Waste Container No.: _____

Daughter Drums					
10.1[4]/10.2[4]	Daughter Drum No.				
10.1[4]	Daughter Drum Filter No.				
10.1[4]	Daughter Drum Bag Filter No.				
10.1[4]	Daughter Drum Purchase Order No.				
10.1[13][C]	WCG Fire Watch Stationed		☐ YES	☐ NO	☐ N/A
10.1[14][C][d]3/11.1[3]	WCG Fire Watch Secured		☐ YES	☐ NO	☐ N/A
10.2[4]	POC bag-on bag: Manufacturer				
	Model No.				
	Serial No.				
	Date of Manufacture				
10.2[5]	POC ID No				
10.2[7][B]/10.2[6]	POC Item Description				
10.2[13]	POC Assembly closed per Manufacturer's instructions. (Initial and Z#)				
10.2[14]	POC Assembly Gross Weight (lb)				
10.2[15]	POC Rad. Survey Results (mrem/hr)				
10.3[3][A]	Approx. Containerized Liquid Vol./Units				
10.3[5][A]	Free Liquid Volume/Units				
10.3[7][A]	Opaque/Non-penetrable Item Description:				
10.3[9][A]	PCB-contaminated Waste Description				
10.3[9][B]	PCB Item ID No.				
10.3[10]	Remaining Waste Description				
10.3[13]/10.4[10]/ 10.5[4]/10.6[8]	Daughter Drum % Full (%)				
10.5[3]/10.6[2]	Description Waste Added During Processing				

ATTACHMENT 1
Page 4 of 4

4.1[6][B] Parent Waste Container No.: _____

Comments: _____

_____
_____
_____
_____
_____
_____
_____
_____

11.1[1] Performed By: _____ / _____ / _____ / _____
Waste Handling Tech (print) Signature Z # Date

11.1[7] Reviewed By: _____ / _____ / _____ / _____
SOS or designee (print) Signature Z # Date/Time

ATTACHMENT 2
Page 1 of 1

WCRRF WCG CRITICAL LIFT PLAN CONCURRENCE SHEET

Critical Lift Concurrence

NOTE *By signing below, I hereby confirm that I have read and understand this critical lift plan, I concur with the information contained herein, and I am authorizing the work to proceed per this plan.*

Name/Signature	Assignment	Date
	Certified Hoisting/Rigging PIC	
	Drum Lift Operator (Certified Hoisting/Rigging Operator)	

ATTACHMENT 3
Page 1 of 2

WCRRF WCG DRUM LIFT INSPECTION DATA SHEET

6.1[2] Inspection Date: _____

6.1[4] Previous number of shaft bolt threads exposed:
- Upper Pulley Bolt Threads visible: _____
- Middle Pulley Bolt Threads visible: _____
- Lower Pulley Bolt Threads visible: _____

6.1[5] Current number of shaft bolt threads exposed:
- Upper Pulley Bolt Threads visible: _____
- Middle Pulley Bolt Threads visible: _____
- Lower Pulley Bolt Threads visible: _____

6.1[6] Shaft bolt end is flush with or extends out of the outer end of the shaft bolt locknut
- Upper Pulley Bolt Threads visible: ☐ YES ☐ NO
- Middle Pulley Bolt Threads visible: ☐ YES ☐ NO
- Lower Pulley Bolt Threads visible: ☐ YES ☐ NO

6.1[7] Shaft bolts do not show any sign of wear between the shaft bolt and the support flange (e.g., shaft not perpendicular to the flange plate):
- Upper Pulley Assembly: ☐ SAT ☐ UNSAT
- Middle Pulley Assembly: ☐ SAT ☐ UNSAT
- Lower Pulley Assembly: ☐ SAT ☐ UNSAT

6.1[9] New upper wire rope damage observed: ☐ YES ☐ NO

TABLE 3-1, UPPER WIRE ROPE DAMAGE

Description of Wire Rope Damage (e.g., wire break, corrosion, or pinch) (6.1[3]/6.1[10])	Previously Identified Damage (√) (6.1[3])	Damage Location from Hoist Drum (inches) (6.1[10])	Distance from damage to nearest wire break (inches) (6.1[10])

ATTACHMENT 3
Page 2 of 2

6.1[2] Inspection Date: _____

6.1[12] New lower wire rope damage observed: ☐ YES ☐ NO

TABLE 3-2, LOWER WIRE ROPE DAMAGE

Description of Wire Rope Damage (e.g., wire break, corrosion, or pinch) (6.1[3]/6.1[13])	Previously Identified Damage (√) (6.1[3])	Damage Location from Hoist Drum (inches) (6.1[13])	Distance from damage to nearest wire break (inches) (6.1[13])

6.1[14][A]/ 6.1[15] There is no more than one wire break within a 2-in. span along the wire rope: ☐ SAT ☐ UNSAT

Comments: _____

6.1[16][A]/ 11.1[1] Performed By: _____ / _____ / _____ / _____
Operator (print) Signature Z # Date

11.1[7] Reviewed By: _____ / _____ / _____ / _____
SOS or designee (print) Signature Z # Date/Time

ATTACHMENT 4
Page 1 of 1

WCRRF WCG BREACHING (OPENING) UNVENTED, SEALED WASTE PACKAGES

10.1[10][A] Parent Drum Container ID: _____ Page _____ of _____

Unvented-Sealed Waste Package type: (10.1[10][B])	☐ Metal 5- to 30-gal ☐ Non-metallic 5- to 30-gal ☐ < 5 gal	☐ Metal 5- to 30-gal ☐ Non-metallic 5- to 30-gal ☐ < 5 gal	☐ Metal 5- to 30-gal ☐ Non-metallic 5- to 30-gal ☐ < 5 gal	☐ Metal 5- to 30-gal ☐ Non-metallic 5- to 30-gal ☐ < 5 gal
($) Non-spark producing tools available in WCG. (SAC 5.10.1.6.1) (10.1[10][C])	☐ YES ☐ NO			
($)WCG electrical receptacles de-energized and locked open/off. (SAC 5.10.1.6.2) (10.1[10][D])	☐ SAT ☐ UNSAT			
($) 5- to 30-gal waste package lid restraint inspected for degradation (e.g., no indication of cracked parts, missing fasteners, loose or frayed parts, excessive wear, or unusual deformation), and determined to be capable of restricting lid. (SAC 5.10.1.5.1) (10.1[11][A])	☐ SAT ☐ UNSAT ☐ N/A < 5 gal	☐ SAT ☐ UNSAT ☐ N/A < 5 gal	☐ SAT ☐ UNSAT ☐ N/A < 5 gal	☐ SAT ☐ UNSAT ☐ N/A < 5 gal
($) Waste package lid restraint attached to waste package and proper installation verified. (SAC 5.10.1.5.1) (10.1[11][B])	☐ SAT ☐ UNSAT ☐ N/A < 5 gal	☐ SAT ☐ UNSAT ☐ N/A < 5 gal	☐ SAT ☐ UNSAT ☐ N/A < 5 gal	☐ SAT ☐ UNSAT ☐ N/A < 5 gal
($) Time 5- to 30-gal lid and lid restraint removed from the waste package. (Start Time) (SAC 5.10.1.5.2) or SAC 5.10.1.6.3) (10.1[11][I])	_____ ☐ N/A < 5 gal	_____ ☐ N/A < 5 gal	_____ ☐ N/A < 5 gal	_____ ☐ N/A < 5 gal
($) Time since 5- to 30-gal lid and lid restraint removed from the waste package. (SAC 5.10.1.5.2) or SAC 5.10.1.6.3) (10.1[11][K])	_____ ☐ N/A < 5 gal	_____ ☐ N/A < 5 gal	_____ ☐ N/A < 5 gal	_____ ☐ N/A < 5 gal
($) Elapsed time since 5- to 30-gal lid and lid restraint removed from waste package is ≥ 30 minutes, and glovebox operations may resume and WCG electrical receptacles may be re-energized. (SAC 5.10.1.5.2) or SAC 5.10.1.6.3) (10.1[11][K])	☐ SAT ☐ UNSAT ☐ N/A < 5 gal	☐ SAT ☐ UNSAT ☐ N/A < 5 gal	☐ SAT ☐ UNSAT ☐ N/A < 5 gal	☐ SAT ☐ UNSAT ☐ N/A < 5 gal
($) Time < 5-gal lid removed from the waste package. (Start Time) (SAC 5.10.1.6.3) (10.1[12][B])	_____ ☐ N/A > 5 gal	_____ ☐ N/A > 5 gal	_____ ☐ N/A > 5 gal	_____ ☐ N/A > 5 gal
($) Time since < 5-gal lid removed from the waste package. (End Time) (SAC 5.10.1.6.3) (10.1[12][C][a])	_____ ☐ N/A > 5 gal	_____ ☐ N/A > 5 gal	_____ ☐ N/A > 5 gal	_____ ☐ N/A > 5 gal
($) Elapsed time since < 5-gal lid removed from waste package is ≥ 30 minutes, and WCG electrical receptacles may be re-energized. (SAC 5.10.1.6.3) (10.1[12][C][a])	☐ SAT ☐ UNSAT ☐ N/A > 5 gal	☐ SAT ☐ UNSAT ☐ N/A > 5 gal	☐ SAT ☐ UNSAT ☐ N/A > 5 gal	☐ SAT ☐ UNSAT ☐ N/A > 5 gal

Comments: _____

11.1[1] Performed By: _____ / _____ / _____ / _____
Operator (print) Signature Z # Date

11.1[7] Reviewed By: _____ / _____ / _____ / _____
SOS or designee (print) Signature Z # Date/Time

ATTACHMENT 5
Page 1 of 1

WCRRF WCG BREACHING (OPENING) 5- to 30-gal
METAL UNVENTED, SEALED WASTE PACKAGE SURVEILLANCE

10.1[10][E][a] Waste Container ID: _____

10.1[10][E][b] **($)** 55-gal parent drum containing an unvented-sealed METAL 5- to 30-gal waste package grounded to the WCG with a grounding strap that is firmly attached at all ends to clean-bare metal surfaces. (SR 4.6.1) ☐ SAT ☐ UNSAT

10.1[10][E][c] **VERIFY** that the grounding strap is attached ☐ SAT ☐ UNSAT

10.1[11][C] **($)** Unvented-sealed METAL 5- to 30-gal waste package grounded to the WCG with a grounding strap that is firmly attached at all ends to clean-bare metal surfaces. (SR 4.6.1) ☐ SAT ☐ UNSAT

10.1[11][D] **VERIFY** that the grounding strap is attached ☐ SAT ☐ UNSAT

11.1[11[E] Verified By: _____ / _____ / _____ / _____
Print Signature Z # Date

Comments: _____

11.1[1] Performed By: _____ / _____ / _____ / _____
Waste Handling Tech (print) Signature Z # Date

11.1[2][D] Reviewed By: _____ / _____ / _____ / _____
CSE (print) Signature Z # Date

11.1[6][A] Acceptance criteria satisfied: ☐ YES ☐ NO

11.1[7] Reviewed By: _____ / _____ / _____ / _____
SOS or designee (print) Signature Z # Date/Time

ATTACHMENT 6

Page 1 of 1

WCRRF PROHIBITED ITEM COLLECTION DRUM DATA SHEET

Container No. (10.3[8][B][e]):	Type (10.3[8][B][e]): ☐ Pressurized Container ☐ Aerosol Cans ☐ Other: _____	PE-Ci Value: **8 PE-Ci**	Date Created (10.3[8][B][e]):	Page _____ of _____

Date Item Added (10.3[8][B][e])	Item ID No. (10.3[8][B][e])	Parent Container No. (10.3[8][B][e])	Parent Accumulation Start Date (10.3[8][B][e])	Parent EPA Codes (10.3[8][B][e])	Item Description (10.3[8][B][e])	Item Shape (10.3[8][B][e])	Item Size (10.3[8][B][e])	Item Labeling (10.3[8][B][e])	Item Weight (lb) (10.3[8][B][e])	Initials/Z# (10.3[8][B][e])

ENCLOSURE 2

EP-WCRR-WO-DOP-0233, R37: WCRRF Waste Characterization Glovebox Operations

ENV-DO-14-0178

LA-UR-14-25292

Date: JUL 29 2014

WCRRF Waste Characterization Glovebox Operations

Effective Date: 03/20/13

NOTE *This procedure may be either a Moderate or High/Complex Hazard activity based on the anticipated radiation levels during the performance of the activity in accordance with P300 requirements.*

Hazard Class:	☐ Low	☒ Moderate	☒ High/Complex
Usage Mode:	☐ Reference	☐ UET	☒ Both UET & Reference

The Responsible Manager has determined that the following organizations' review/concurrence is required for the initial document and for major revisions a same type and level review is required. Review documentation is contained in the Document History File:

TRU Waste Project Support
Engineering
Quality Assurance
Radiation Protection
Industrial Hygiene and Safety
Subject-Matter Expert
Environmental Stewardship
Operations Support
Shift Operations Manager

Responsible Manager, LTP-DDP Operations Manager

Name (print)	Z#	Signature	Date
Lou Jalbert	121997	/s/ Lou Jalbert	03/19/13

Classification Review: ☐ N/A ☒ Unclassified ☐ UCNI ☐ Classified _____

Name (print)	Z#	Signature	Date
Art Crawford	080070	/s/ Art Crawford	03/18/13

Working Copy / Information Only (circle one)
Initials / Date: _____/_____

This document fully satisfies the requirements of P300, Integrated Work Management, in order to systematically describe the work activity, the associated hazards, and the controls that **MUST** be employed to mitigate the risks.

HISTORY OF REVISIONS

Document Number	Issue Date	Action	Description
EP-WCRR-WO-DOP-0233, R.0	May 2007	New Document	
EP-WCRR-WO-DOP-0233, R.1	June 2007	Major Revision	Added requirement to move assay equipment outside of the WCG exclusion zone when not in use. Added precaution to prevent addition of items from multiple parent drums into a single daughter drum or Pipe Overpack Container. Added precaution for prohibited items – Class 1 oxidizers such as nitrates and reactive flammables.
EP-WCRR-WO-DOP-0233, R.2	June 2007	Major Revision	Added steps for dispositioning of potential pressurized containers.
EP-WCRR-WO-DOP-0233, R3	July 2007	Major Revision	Added steps for disposition of liquids. Added steps for actions to be taken in the event that any actual or suspected Class 1 oxidizers, flammables, or Pyrophoric materials/items are encountered.
EP-WCRR-WO-DOP-0233, R4	July 2007	Major Revision	Made use of glovebag to process Pu-238 inside the WCG optional based on input from the Facility ALARA Review Committee.
EP-WCRR-WO-DOP-0233, R5	July 2007	Major Revision	Added precaution for performance of diligent glove surveys and periodic glovebox wipe-downs when handling Pu-238. Deleted requirement for use of glovebag to process Pu-238 inside the WCG. Deleted Note in Sect. 8.12 which referenced use of partially filled POC's if all waste is from the same waste stream.
EP-WCRR-WO-DOP-0233, R.6	October 2007	Major Revision	Added precaution to prohibit remediation of following in the WCG 1) sealed containers > 4 liters that have a positive locking mechanism, 2) sealed un-vented containers > 4 liters with free liquids. Added action steps to take if containers are encountered. Added "allowed" container types that may be remediated. Added Attachment 3: Real Time Radiography Review for "Un-Allowed" Contents
EP-WCRR-WO-DOP-0233, R.7	October 2007	Minor Revision	Revised wording in Attachment 3 for review of RTR data.
EP-WCRR-WO-DOP-0233, R.8	October 2007	Major Revision	Deleted requirement for Real Time Radiography review & Attachment 3 (will be performed IAW EP-WCRR-WO-DOP-0211). Added section for processing high dose waste items (> 190 mrem/hr) of mixed material types. Added Attachment 3: Flowchart for Processing of High Dose Items of Mixed Material Types.
EP-WCRR-WO-DOP-0233, R.9	TBD	Major Revision	Incorporate the WCRR TSR page change to allow the opening of unvented 5- to 30-gal waste packages inside of the WCG.
EP-WCRR-WO-DOP-0233, R.10	January 2008	Major Revision	Delete requirement for SOM & CSE review of grounding sealed containers prior to venting.
EP-WCRR-WO-DOP-0233, R.11	March 2008	Minor Revision	Revised page 7 of 31 to include processing items that are heavy.

HISTORY OF REVISIONS (continued)

Document Number	Issue Date	Action	Description
EP-WCRR-WO-DOP-0233, R12	April 2009	Major	Revise procedure to incorporate the WCRRF TSR Revision 1 changes to the minimum staffing requirements which allows for the SOM to be on-call in the Operations Mode and now includes the requirements for the SOS (requires that the SOS be present at WCRRF during the Operations Mode and on-call in the Warm Standby Mode). This revision does not introduce any new hazards in this procedure. Update forms are required.
EP-WCRR-WO-DOP-0233, R13	May 11, 2009	Minor Revision	Revise procedure to provide guidance for the operator that the glovebox operations may continue after opening a < 5 gal unvented container without waiting 30 min., but the WCG electrical receptacles cannot be re-energized until 30 min. has elapsed since the unvented container was opened. Add additional instructions for creating loops within the document to address waste packages imbedded within other waste packages. This revision does not introduce any new hazards.
EP-WCRR-WO-DOP-0233, R14	June 12, 2009	Major Revision	Revise procedure to incorporate editorial corrections and to provide instructions for what to do when a shielded container is encountered containing radioactive material that exceeds the RWP limit. Add instructions to record the Waste Container Identification Number on the applicable attachments. This revision does not introduce any new hazards.
EP-WCRR-WO-DOP-0233, R15	November 24, 2009	Major Revision	Revise procedure to incorporate instructions for establishing, controlling, and the disposition of the Prohibited Item Collection Drum. Make editorial corrections as necessary. This revision does not introduce any new hazards.
EP-WCRR-WO-DOP-0233, R16	Approved for Training	Major Revision	Revise procedure to perform a pH test using pH strips and change “absorbent” to “approved absorbent” in Appendix 2. Make editorial corrections as necessary. This revision does not introduce any new hazards.
EP-WCRR-WO-DOP-0233, R17	February 18, 2010	Major Revision	Revise procedure to incorporate instructions for recording additional information for the prohibited items placed in the prohibited item collection drum. Incorporate process improvements (step sequences) and make editorial corrections as necessary. This revision does not introduce any new hazards. Incorporate the requirements of P300 and the hazards and controls from JHA 0008741 into this procedure.

HISTORY OF REVISIONS (continued)

Document Number	Issue Date	Action	Description
EP-WCRR-WO-DOP-0233, R18	March 22, 2010	Major Revision	Revise procedure to incorporate instructions for glovebox glove inspections and make editorial corrections as necessary. This revision does not introduce any new hazards.
EP-WCRR-WO-DOP-0233, R19	Training Only	Major Revision	Revise procedure to incorporate formality of operations into the procedure and incorporate the four parts of an integrated work document into the procedure in accordance with P300. Change title to WCRRF Waste Characterization Glovebox Operations. This revision is a total rewrite and revision bars have been omitted. This revision does not introduce any new hazards. This revision supersedes the following procedures: • EP-WCRR-WO-DOP-0223, Revision 4 • EP-WCRR-WO-DOP-0231, Revision 4 • EP-WCRR-WO-DOP-0232, Revision 8 • EP-WCRR-WO-DOP-0233, Revision 18
EP-WCRR-WO-DOP-0233, R20	October 27, 2010	Major Revision	Revise procedure to remove the requirements of SAC 5.10.1.2(1) in accordance with TSR Page Change 1.2, the fire blanket and MET-L-X is no longer a TSR requirement. The MET-L-X is being left as an administrative control. Make editorial corrections such as format changes. This revision does not introduce any new hazards.
EP-WCRR-WO-DOP-0233, R.21	November 2, 2010	Major Revision	Revise procedure to require that Building TA-50-69 is in the OPERATION mode for all activities in the procedure. Remove the Note in front of Step 4.3[7]. Add “approximately halfway” to Step 5.[9]. Change WARNING before Step 6.1[11] to indicate that there is no drum on the lift at this time. Revise Step 10.3[3] to remove requirement for testing a small portion of liquid and provide additional guidance for absorbing liquid. Make editorial corrections such as format changes. This revision does not introduce any new hazards.
EP-WCRR-WO-DOP-0233, R.22	November 8, 2010	Minor Revision	Revise procedure to modify hold tag note in Section 10.3 and modify step 10.3[2]. This revision does not introduce any new hazards.
EP-WCRR-WO-DOP-0233, R.23	February 8, 2011	Major Revision	Revise procedure to correct the TSR references and to allow the replacement of WCG bags in the WARM STANDBY mode. This revision does not introduce any new hazards.

HISTORY OF REVISIONS (continued)

Document Number	Issue Date	Action	Description
EP-WCRR-WO-DOP-0233, R.24	February 13, 2011	Minor Revision	Revise procedure to correct references and to provide clarification for the closure of a POC. Provide additional guidance for securing the horsetail during bag-in/bag-out operations. Make editorial corrections as necessary. This revision does not alter the purpose, scope, or intent of the original document. This revision does not introduce any new hazards.
EP-WCRR-WO-DOP-0233, R.25	April 13, 2011	Minor Revision	Revise procedure to incorporate process improvements. Incorporate instructions as to what to do if the parent drum closure ring cannot be reinstalled before lowering the parent drum. Make editorial corrections as necessary. This revision does not alter the purpose, scope, or intent of the original document. This revision does not introduce any new hazards.
EP-WCRR-WO-DOP-0233, R.26	April 18, 2011	Minor Revision	Revise procedure to provide instructions for loosening the nut on the closure ring bolt before lifting the waste drum up to the WCG. Make editorial corrections as necessary. This revision does not alter the purpose, scope, or intent of the original document. This revision does not introduce any new hazards.
EP-WCRR-WO-DOP-0233, R.27	June 9, 2011	Minor Revision	Revise procedure to provide instructions for inspecting drum lift hinge pins and attaching hinge pin retaining clips in Section 6.2; and add note that the retaining clips must be ML-2. Update equipment list to reflect ML-2 retaining clip. Make editorial corrections as necessary. This revision does not alter the purpose, scope, or intent of the original document. This revision does not introduce any new hazards.
EP-WCRR-WO-DOP-0233, R.28	August 10, 2011	Major Revision	This procedure is being revised to allow for bagging a POC onto the WCG, to correct the actions to be taken if a drum is stuck on the WCG drum lift, and to allow for processing waste at greater than 10 rem/hr. This last issue makes the activity a High/Complex Hazard Activity. The HA has been modified to allowed for the procedure to be performed as a Moderate or High/Complex Hazard Activity.
EP-WCRR-WO-DOP-0233, R.29	August 12, 2011	Minor Revision	Revise procedure to correct the high/complex activity hazard classification step in Attachment 1 to "> 10 rem/hr." This revision does not introduce any new hazards.

HISTORY OF REVISIONS (continued)

Document Number	Issue Date	Action	Description
EP-WCRR-WO-DOP-0233, Rev 29 IPC-1	August 29, 2011	IPC-1	Revised to change word in step 5.[11] from below to above and a caution and additional language to step 5[12] added ENSURE banding material is not placed around the hoop.
EP-WCRR-WO-DOP-0233, R.30	Training Only	Minor Revision	Revised to update requirements from page change 2.0 and 2.1 associated with STATIONARY Fire Watch in precautions, limitations and associated. Steps of the procedure when inventory is greater than >300 PE Ci. A STATIONARY FIRE WATCH is required in OPERATIONS and WARM STANDBY MODE when the WCG contains INVENTORY > 300 PE-Ci of EQUIVALENT COMBUSTIBLE WASTE. (SAC 5.10.1.7.1) and WCG SHALL be equipped with three 1-litre containers of carbon spheroids or MetL-X when the glovebox INVENTORY is >300 PE-Ci of EQUIVALENT COMBUSTIBLE WASTE (SAC 5.10.1.7.2), and WCG operators SHALL be trained in glovebox fire suppression techniques in order to extinguish small, early developing fires when processing INVENTORY > 300 PE-Ci of EQUIVALENT COMBUSTIBLE WASTE, in coordination with the STATIONARY FIRE WATCH, . This revision has not introduced any additional changes to the JHA.
EP-WCRR-WO-DOP-0233, R.31	Training Only	Minor Revision	Revise procedure to incorporate WCRRF TSR 2.0/2.1 IVR issues. Make editorial corrections as necessary. Revision does not introduce any additional hazards.
EP-WCRR-WO-DOP-0233, R.32	January 31, 2012	Minor Revision	Revise steps referencing 300 PE-Ci to add “equivalent combustible” after PE-Ci. Revision does not introduce any additional hazards.
EP-WCRR-WO-DOP-0233, R.33	April 5, 2012	Minor Revision	Revise procedure to incorporate instructions for the introduction of supplies into the WCG, for leaving a parent drum attached to the WCG overnight, and modify actions for a drum lift deficiency. Make editorial corrections such as correcting step numbering. Revision does not introduce any additional hazards.
EP-WCRR-WO-DOP-0233, R.34	May 24, 2012	Minor Revision	Revise procedure to provide guidance on simulating waste in a drum when obtaining radiation surveys and add the use of the Trolley Rail Clamp. Make editorial corrections such as correcting references. Revision does not introduce any additional hazards.

HISTORY OF REVISIONS (continued)

Document Number	Issue Date	Action	Description
EP-WCRR-WO-DOP-0233, R.35	July 2, 2012	Major Revision	Revised to separate verification steps from actual steps in Section 10.1 [10][D] and 10.1[10][E], 10.1[11][C], and reword Step 10.1[11][O] to read If directed by Supervision as a pre condition and Attachment 4 & 5 . Added steps for instructions for Administrative Lock Log, key, and lock Section 10. Added Steps to Section 4.1, 6.2, and 7.1 for using the Trolley Clamp Device. No additional hazards were identified during this revision. Rev bars in left column display locations of changes to the procedure.
EP-WCRR-WO-DOP-0233, R.36	August 1, 2012	Major Revision	Revised procedure to incorporate EP-SO-1708, and add steps to clarify the amount of absorbent needed when processing Nitrate Salts. Also added Appendix 6 Administrative Control Lock Log Sheet. No additional hazards were identified during this revision. Revision bars in the left column display location of changes in the procedure.
EP-WCRR-WO-DOP-0233, R.37	March 20, 2013	Major Revision	Revise procedure to allow flexibility with the processing of Nitrate Salts in order to permit flexibility with the amount of absorbent used. Make editorial corrections as necessary. Delete reference to the initiation of an NCR for issues associated with the waste material. No additional hazards were identified during this revision.

TABLE OF CONTENTS

Section Page

TITLE PAGE 1
REVISION HISTORY 2
TABLE OF CONTENTS 8

1. PURPOSE 10

2. SCOPE 10

3. PRECAUTIONS AND LIMITATIONS 11

4. PREREQUISITES ACTIONS 18
4.1 Planning and Coordination 18
4.2 Materials and Equipment 20
4.2.1 Special Tools and Equipment 20
4.2.2 Consumables 20
4.2.3 Measurement and Test Equipment (M&TE) 21
4.3 Field Preparation 21

5. PERFORMANCE—PARENT WASTE CONTAINER PREPARATION 28

6. PERFORMANCE—WCG PARENT DRUM LOADING/UNLOADING 31
6.1 WCG Drum Lift Daily Inspection 31
6.2 Parent Drum Loading 35
6.3 Parent Drum Unloading 39

7. PERFORMANCE—WCG PARENT DRUM BAG-ON/BAG-OFF OPERATIONS 42
7.1 Parent Drum Bag On 42
7.2 Parent Drum Bag Off 44

8. PERFORMANCE—WCG DAUGHTER DRUM, BAGPORT, OR GLOVEPORT BAG-ON/BAG-OFF OPERATIONS 49
8.1 Bag On Daughter Drum, Bagport, or Gloveport 49
8.2 Bag Off Daughter Drum 51

9. PERFORMANCE—ITEM BAG-IN/BAG-OUT OPERATIONS 55
9.1 WCG Item Bag-Out 55
9.2 WCG Introductory Port 59

10. PERFORMANCE—WCG WASTE PROCESSING 61
10.1 WCG Waste Processing Preparation 61
10.2 Waste Material Greater Than 190 mrem/hr 72
10.3 Prohibited Item Disposition 76
10.4 Waste Splitting Activities 82
10.5 Repackaging Activities 84
10.6 Processing Nitrate Salt Drums 85

TABLE OF CONTENTS (continued)

Section Page

11. POST-PERFORMANCE ACTIVITY 87
11.1 Disposition 87
11.2 Records Processing 89

12. REFERENCES 90

Appendices
Appendix 1, Waste Drum Critical Lift Plan 92
Appendix 2, WCRRF Allowable Container Types For Remediation 95
Appendix 3, Example Preoperational Inspection Record For Overhead Cranes and Hoists 96
Appendix 4, Volumes of Cylindrical Inner Containers Near 4 Liters 97
Appendix 5, Flowchart For Processing of High Dose Items of Mixed Material Types 98
Appendix 6, Administrative Control Lock Log Sheet 99

Attachments
Attachment 1, WCRRF WCG Waste Processing Data Sheet 100
Attachment 2, WCRRF WCG Critical Lift Plan Concurrence Sheet 104
Attachment 3, WCRRF WCG Drum Lift Inspection Data Sheet 105
Attachment 4, WCRRF WCG Breaching (Opening) Unvented, Sealed Waste Packages Checklist 107
Attachment 5, WCRRF WCG Breaching (Opening) Metal 5- to 30 gal Unvented6 Sealed Waste Package Surveillance 108
Attachment 6, WCRRF Prohibited Item Collection Drum Data Sheet 109

1. PURPOSE

This procedure provides detailed instructions for Waste Characterization Glovebox (WCG) operations at the Waste Characterization, Reduction, and Repacking Facility (WCRRF).

TRU waste that has been identified as not satisfying Waste Isolation Pilot Plant (WIPP) acceptance criteria must be remediated to satisfy the WIPP criteria. Prohibited items must be removed or corrected and the container must also satisfy limits on the amount of radioactive material in each container. Containers that fail to satisfy the WIPP criteria maybe sent to WCRRF to be safely remediated in the WCG.

2. SCOPE

This procedure applies to personnel who perform WCG operations.

The Performance sections of this procedure may be performed independently or in conjunction with other Performance sections.

As used within this procedure a parent waste container is the originating waste container received at WCRRF for processing and a daughter drum is the resulting waste container packaged with the originating waste container waste. There may be multiple daughter drums.

This procedure addresses the following WCG activities:

- Preparation of parent waste containers
- Daughter drum, bagport, and gloveport bag-on/bag-off operations
- Parent drum bag-on/bag-off operations
- Parent drum WCG loading/unloading operations
- WCG waste processing

This procedure addresses the following activities for the complete processing and disposition of waste material within the WCG:

- Visual Examination (VE)
- Prohibited Item Dispositioning (PID)
- Pipe Overpack Component (POC)
- Waste Splitting
- Repackaging

EP-DIV-AP-0108, LTP Waste Record (TWSR/WDR) Initiation and Label Creation, is performed concurrently with this procedure in order to track waste containers in the Waste Management Database and to generate waste container labels.

2. SCOPE (continued)

The performance of this procedure may be classified as a Moderate or High/Complex Hazard activity based on the potential radiation levels encountered during the performance of this activity. To accommodate the two hazard classifications this document requires the identification of the potential radiation levels that may be encountered and documentation of the hazard classification level (moderate or high/complex).

3. PRECAUTIONS AND LIMITATIONS

- This procedure contains special procedure step markings. **($)** is used to identify steps that implement WCRRF Safety Basis requirements. Steps containing **($)** may not be changed without Engineering approval to ensure the safety envelope is maintained.

- To comply with the intent of the As Low As Reasonably Achievable (ALARA) Program, all personnel **SHALL** apply the principles of time, distance, and shielding when working with radiological materials.

- Avoid the open area of a shielded container to prevent an increased exposure to radiation which could result from the streaming of radiation while accessing shielded containers during the processing of waste.

- Activities, items, and containers **SHALL** satisfy approved design specifications, regulatory requirements, process-specific parameters, and procedural requirements. Activities, items, or containers that do not conform to the approved specifications and requirements are considered nonconforming and Nonconformance Reports (NCRs) **SHALL** be generated in accordance with P330-6, Nonconformance Reporting, as required.

- When a worker observes an unsafe condition or act that may pose an imminent danger or other safety concern/hazard, the worker has the authority and responsibility to inform the worker engaged in the work and request that the work activity be paused and/or stopped based on the risk posed to the individual, the employees, the environment, or the facility in accordance with P101-18, Procedure for Pause/Stop Work.

- Supervision **SHALL** be notified if this procedure cannot be performed as written.

- Not Applicable (N/A) is documented on the attachments during the performance of this procedure indicating information that is not required to be recorded.

3. PRECAUTIONS AND LIMITATIONS (continued)

- **($)** TRU WASTE CONTAINERS **SHALL** not be stacked and **SHALL** not be lifted higher than 4 ft, excluding the WCG drum lift and lifts during loading or unloading from delivery trucks. (SAC 5.10.2.2)

- Drums **SHALL** not be lifted greater than 4 ft during any operation involved in preparing the drum.

- This procedure **SHALL** not be used to prepare DEGRADED/LOSS OF INTEGRITY drums. DEGRADED/LOSS OF INTEGRITY drums are prepared in accordance with EP-WCRR-WO-DOP-0236, WCRRF Loading/Unloading SWB or 85-Gal Drum.

- **($)** Drums **SHALL** be verified to weigh less than 630 lb before lifting the drums using the WCG drum lift. (SR 4.5.1) Administratively drum weights **SHALL** be limited to 624 lb in order to take into consideration the uncertainties of the instrumentation.

- This procedure is to be performed only by Waste Handling Operators as qualified Glovebox Operators.

- To avoid pinch points, the drum lift pendant operator **SHALL** announce operation of the drum lift before commencing raising/lowering of a drum and that all personnel **SHALL** stand clear and to the side of drum movement.

- **($)** The facility must be in the OPERATION MODE to process waste in the WCG. (TSR 1.2)

- The approximate weight of load should be known before moving and the appropriate capacity lift selected. Be aware of uneven loading and shifts in the load when moving.

- Drums can have sharp edges and create pinch points when being moved – use appropriate gloves when handling drums.

- Use proper lifting techniques and buddy system and wear steel toed shoes when performing heavy lifting or movements and comply with the requirements of EP-DIV-Policy-20057, EWMO Health and Safety Policy-Manual Movement

3. PRECAUTIONS AND LIMITATIONS (continued)

- **($)** No flammable liquids or gases, and no combustible liquids with NFPA Flammability Rating greater than 1 **SHALL** be stored or used within BUILDING TA-50-69 when INVENTORY is in BUILDING TA-50-69 except three size 1 cylinders of P-10 gas and flammable or combustible liquids found in the TRU WASTE CONTAINER. (LCO 3.4.2)
- Portable high-efficiency particulate air (HEPA) filter ventilation equipment **SHALL** be removed from the WCG Exclusion Area after operations are complete. This limitation supports LCO 3.4.2.
- Due to the unique characteristics of Pu-238, diligent glove surveys should be performed before and after handling Pu-238, as well as periodic glovebox wipe downs.
- All operators involved in the execution of this procedure must be qualified as Waste Handling Operators.
- Fire Patrol or Stationary Fire Watch **SHALL** be established in accordance with the applicable Technical Safety Requirements and identified in EP-DIV-AP-0120, EWMO Watchbill Administration.
- STATIONARY FIRE WATCH **SHALL** be performed in accordance with EP-DIV-AP-0120, EWMO Watchbill Administration.
- **($)** WCG **SHALL** be equipped with three 1-liter containers of carbon spheroids or Met-L-X when the glovebox INVENTORY is > 300 PE-Ci of EQUIVALENT COMBUSTIBLE WASTE. (SAC 5.10.1.7.1)
- An administrative control will ensure that the WCG will be equipped with three 1-liter containers of carbon spheroids or MET-L-X to prevent the potential spread of a fire in the glovebox regardless of the inventory quantity in the WCG.
- **($)** A STATIONARY FIRE WATCH **SHALL** be in place when the WCG contains INVENTORY > 300 PE-Ci of EQUIVALENT COMBUSTIBLE WASTE, in order to extinguish small, early developing fires, in coordination with WCG operators. (SAC 5.10.1.7.2)
- When processing a parent drum if an item is encountered to be too large or heavy to handle supervision is to be notified.

3. PRECAUTIONS AND LIMITATIONS (continued)

- Use caution when performing glovebox operations. Operations may involve handling of sharp objects, applying force to objects with tools, lifting heavy materials or items.
  - The glovebox gloves **SHALL** have cut resistant (e.g., leather, or HexArmor®) gloves over them during glovebox operations when handling sharp objects or opening/closing waste containers.
  - Use the two-man rule when lifting heavy materials or items.
  - Cut or apply force away from hands and arms.
  - Use approved tools and techniques.
  - Tools **SHALL** be in good working order.

- **($)** WCG operators **SHALL** be trained in glovebox fire suppression techniques in order to extinguish small, early developing fires when processing INVENTORY > 300 PE-Ci of EQUIVALENT COMBUSTIBLE WASTE, in coordination with the STATIONARY FIRE WATCH. (SAC 5.10.1.7.3)

- Unvented, sealed waste packages are those waste packages that have a positive locking mechanism, such as a gasket with drum closure ring or a screw top lid (with no other openings) to seal the lid to the waste package.

- **($)** When breaching (opening) unvented, sealed waste packages in the WCG the following requirements **SHALL** be satisfied:
  - Non-sparking tools and processes **SHALL** be used, (SAC 5.10.1.6.1)
  - Electrical receptacles within the WCG **SHALL** be de-energized before opening the waste package and remain de-energized for a minimum of 30 minutes after removing the lid and lid restraining device. (SAC 5.10.1.6.2) and (SAC 5.10.1.6.3)

- **($)** Before breaching (opening)an unvented, sealed 5- to 30-gal waste packages in the WCG a lid restraining device **SHALL** be inspected for degradation and properly installed (SAC 5.10.1.5.1), and WCG operations **SHALL** be ceased for a minimum of 30 minutes following the removal of the waste package lid and lid restraining device (breaching). (SAC 5.10.1.5.2)

- **($)** When processing a positively sealed 30- to 5-gallon metal WASTE PACKAGE in the WCG, the parent 55-gallon drum bagged-on to the WCG and metal WASTE PACKAGE **SHALL** be grounded when the metal WASTE PACKAGE is breached and for 30 minutes after the removal of the lid and lid restraining device. (LCO 3.6)

3. PRECAUTIONS AND LIMITATIONS (continued)

- Personnel **SHALL** be aware of heat and cold stress indicators and observe co-workers in accordance with the Thermal Stress Awareness Course.

- Personnel protective equipment (PPE) **SHALL** be worn (e.g., safety shoes, cut resistance gloves, and respirator) as required by Industrial Hygiene/Health and Safety and in accordance with the RWP.

- Sharp objects **SHALL** be covered and properly stored when not in use. Wear cut/puncture resistant glove (e.g., leather) and cut away from your body when in use.

- All sharp objects that are introduced inside the glovebox **SHALL** be properly identified and stored when not in use in accordance with EP-DIV-AP-20047, LTP Glovebox/Glovebag and Glove Safety Program.

- Routine inspection of glovebox gloves **SHALL** be conducted in accordance with EP-DIV-AP-20047 and this procedure.

- To prevent personnel injury due to ergonomic, pinch point, and other general hazards, personnel **SHALL** maintain an awareness of the working environment and task activities and use good work practices and techniques, skill of craft, good ergonomic practices, and minimize time in awkward/uncomfortable positions.

- Spark-producing and non-sparking tools **SHALL** be distinguished from each other. Spark-producing tools are to be set aside in the WCG, and not handled, when non-sparking tools are required.

- A cordless drill may be used to open a parent drum. This will minimize overextending glovebox gloves and potential damage (i.e., tearing a glove) when using a ratchet. The cordless drill is considered to be a spark-producing tool and is to be placed aside in the WCG, and not handled, when non-sparking tools are required.

- Charging of portable electric equipment in the WCG **SHALL** not be performed when there is INVENTORY in the WCG.

- Charging of battery operated equipment external to the WCG **SHALL** not be charged within the WCG exclusion zone.

3. PRECAUTIONS AND LIMITATIONS (continued)

- If receptacle inside the WCG or in the WCG exclusion zone is used, the equipment being plugged in must be in the OFF position before inserting or removing the plug at the receptacle.

- Prohibited items are documented by two distinct processes. One is through the use of the fast scan process, indicated by the GREEN hold tag. The second is through the use of CCP's NCR, indicated by a RED hold tag.

- If during a Green Drum Campaign a suspected special shape is identified while performing VE, Repackaging, or PID, refer to EP-WCRR-RM-AOP-0208, Special Shapes on how to handle the suspected special shape.

- Waste placed into daughter drums or Pipe Overpack Containers (POCs) must be from a single parent drum.

- Based on waste acceptance criteria, Class 1 oxidizers such as nitrates, and reactive flammables such as lithium metal or hydrides are prohibited items in the WCRRF.

- Liquids removed from a parent drum must be remediated (absorbed) inside of a new container.

- Storage of drum lid restraints when <u>not</u> in use **SHALL** be such that the drum lid restraints are protected from degradation (e.g., daughter drum).

- Avoid slips, trips, and falls by wearing the proper footwear with slip-resistant soles and using handrails when using stairs. Use established pathways when available and avoid walking on uneven or unstable surfaces.

- Glass sample vials may contain residual granular plutonium hydride which can generate sparks when subjected to mechanical agitation. To reduce the possibility of breaking a glass sample vial and the generation of sparks, glass sample vials **SHALL** be handled with care and void volume reduction activities **SHALL** be performed without excessive force. (EP-DIV-REPORT-09)

- The fire protection system sprinkler head located in the WCG is a water source that if activated (inadvertently or as a result of an actual WCG fire) would result in the spread of radiological contamination. Contact with the sprinkler head during waste processing is to be avoided in order to reduce the possibility of the inadvertent initiation of water flow into the WCG.

3. PRECAUTIONS AND LIMITATIONS (continued)

- **($)** No combustibles **SHALL** be stored within the waste characterization glovebox (WCG) exclusion zone. The WCG exclusion zone is 10 ft around the WCG, up to GBE, or up to the walls of Room 102, whichever is less. (LCO 3.4)

  The following are excluded from the above limitations of LCO 3.4
  - INVENTORY that is in the WCG or staged in BUILDING TA-50-69.
  - Combustible components of support equipment (e.g., wiring insulation, operator platforms and rubber mats) within the WCG Exclusion Zone and associated with WCG processing.
  - Drum liners or wrapping around DEGRADED/LOSS OF INTEGRITY drums that are inside BUILDING TA-50-69 being loaded and working amounts of material necessary to complete bag on/off operations such as tape, cheese cloth, and extra operator gloves.
  - Hydraulic fluid within the engineered, closed-loop, containment systems.
  - Combustible components associated with a forklift.

4. PREREQUISITES ACTIONS

NOTE *The listed prerequisite actions may be completed in any order.*

4.1 Planning and Coordination

Supervisor or designee

[1] **ENSURE** that this procedure is the latest revision, and **IDENTIFY** this document as Working Copy or Information Only on the Title Page.

[2] **ENSURE** that the performance of this procedure has been scheduled on the WCRRF schedule.

[3] **ENSURE** that a Radiological Work Permit (RWP) is obtained in accordance with P121, Radiation Protection, as applicable.

[4] **ENSURE** that a pre-job briefing is conducted for all personnel involved in the performance of this procedure, in accordance with EP-DIV-AP-0112, EWMO Pre-Job Briefings, and that the pre-job briefing included weather conditions, communication requirements, hazards/controls and emergency response actions.

[5] **ENSURE** that, as a minimum, the following personnel trained in the use of this procedure are available for performance of this procedure, as required:

- Two Radiological Control Technician (RCT)
- Four Waste Handling Technician
- One Supervisor (e.g., Shift Operations Supervisor or Person-In-Charge)
- One Central Characterization Project (CCP) representative [Visual Examination (VE) only]
- **($)** STATIONARY FIRE WATCH (greater than 300 PE-Ci equivalent combustible waste only) (SAC 5.10.1.7.2)

4.1 Planning and Coordination (continued)

[6] **IF** performing Section 10, WCG Waste Processing,
THEN:

[A] **ENSURE** that the waste containers to be processed have been evaluated in accordance with EP-DIV-AP-0107, WDP TRU Waste Container Management Operations, and that a copy of the WDP Waste Remediation Safety Evaluation Data Sheet (EP-DIV-AP-0107 Attachment 1) has been obtained for each waste container to be processed.

[B] **INITIATE** a copy of Attachment 1, WCRRF WCG Waste Processing Data Sheet for each waste container to be processed, and **DOCUMENT** the following information:

- Parent Waste Container Number (record on each page of Attachment 1)
- Processing activity to be performed in accordance with EP-DIV-AP-0107 (i.e., > 190 mrem/hr, PID, Split, or Repack)
- Prohibited Items, if present
- Parent waste container RCRA Designations

[C] **ATTACH** a copy of the WDP Waste Remediation Safety Evaluation Data Sheet (EP-DIV-AP-0107 Attachment 1) to Attachment 1.

[7] **DETERMINE** the hazard classification of the activity to be performed using the following Anticipated Extremity Radiation Dose Rate criteria, and **CHECK** (√) the applicable box on Attachment 1:

- Moderate Hazard - ≤ 10 rem/hr
- High/Complex Hazard - > 10 rem/hr

[8] **OBTAIN** a blank Administrative Control Lock Log Sheet form 10.4 of EP-DIV-AP-0117, lock, and key from the WCRRF Operations Center. (e.g., See Appendix 6, Administrative Control Lock Log Sheet)

4.2 Materials and Equipment

4.2.1 Special Tools and Equipment

NOTE *The list of special tools and equipment is not an all inclusive list and additional tools and equipment may be used as necessary.*

Waste Handling Technician or Supervision

[1] **ENSURE** that the following special tools and equipment are available, as required:

- Safety glasses with side shields
- Permanent marker
- Cut resistant (e.g., HexArmor™, leather, or leather palm mechanics) gloves
- Drum dolly
- Two-wheel dolly
- Portable HEPA-filter exhaust system
- Cutting tool (e.g., utility knife or PVC cutter)
- WCG metal bucket
- Tools for separating and processing waste
- Non-sparking tools for separating and processing waste
- Banding tool
- ML-2 drum lift hinge pin retaining clips (e.g., E-clips)
- Removable lead glass windows
- Lead blankets

4.2.2 Consumables

NOTE *The list of consumables is not an all inclusive list and additional consumables may be used as necessary.*

Waste Handling Technician or Supervision

[1] **ENSURE** that the following consumables are available, as required:

- Bag-off bags (filtered or unfiltered)
- Tape (duct or vinyl)
- Binding ties
- Nitrile gloves
- Plastic waste bags
- Drum labels
- Chemwipes or equivalent
- Wire rope inspection cloth (e.g., cheese cloth)

4.2.2 Consumables (continued)

- Fantastik or equivalent
- Banding material
- Banding buckles
- Kitty Litter/Zeolite® absorbent
- 3 Liters Carbon Spheroids or MET-L-X
- Litmus paper
- Lead or lead equivalent WCG gloves
- Velcro®

4.2.3 Measurement and Test Equipment (M&TE)

Waste Handling Technician or Supervision

[1] **ENSURE** that the following measuring and test equipment are available, as required:
- Platform scale
- WCG scale

4.3 Field Preparation

Waste Handling Technician or Supervision

[1] **($) IF** performing any section except Section 8.1, Bag On Daughter Drum, Bagport, or Gloveport, without bagging in waste material,
THEN ENSURE that Building TA-50-69 is in the OPERATION MODE in accordance with EP-WCRR-FO-DOP-0201, WCRRF and Building TA-50-69 TSR Mode Change, and **CHECK** (√) OPERATIONS on Attachment 1, WCRRF WCG Waste Processing Data Sheet. (TSR 1.2)

[2] **($) IF** performing Section 8.1,
AND waste material is **NOT** being introduced into the WCG,
THEN ENSURE that Building TA-50-69 is in the OPERATION or WARM STANDBY MODE in accordance with EP-WCRR-FO-DOP-0201, and **CHECK** (√) WARM STANDBY on Attachment 1. (TSR 1.2)

[3] **ENSURE** that the WCRRF Operations Center has authorized the performance of this procedure.

4.3 Field Preparation (continued)

[4] **IF** performing one of the following sections:
Section 5, Parent Waste Container Preparation,
Section 6, WCG Parent Drum Loading/Unloading,
Section 10, WCG Waste Processing,
THEN:

[A] **ENSURE** that the weekly Platform Scale calibration verification has been performed in accordance with EP-WCRR-WO-DOP-0239, Verifying WCRRF Scales.

[B] **RECORD** the platform scale serial number and calibration due date on Attachment 1.

[C] **IF** the platform scale exceeds the calibration due date,
THEN NOTIFY the WCRRF Operations Center of the discrepancy, and
REQUEST the applicable actions.

[5] **IF** performing Section 10,
THEN:

[A] **ENSURE** that preprinted Item ID Number labels and PCB Item Number labels are obtained from the Waste Management Coordinator.

[B] **($) VERIFY** that WCG contains three 1-Liter containers of carbon spheroids or MET-L-X, and **CHECK** (√) YES or NO on Attachment 1. (SAC 5.10.1.7.1)

[C] **ENSURE** that the required number of daughter drums have been prepared in accordance with EP-WCRR-WO-DOP-0221, Preparing and Closing 55-gal Daughter Drum Assemblies.

[D] **REVIEW** Appendix 2, WCRRF Allowable Container Types For Remediation.

[E] **ENSURE** that a prohibited item collection drum is available.

[6] **($) IF** performing Section 10,
AND the parent container TRU-waste material inventory value is greater than 300 PE-Ci equivalent combustible waste,
THEN ENSURE a STATIONARY FIRE WATCH has been established, and
DOCUMENT (Initial and Date) on Attachment 1. (SAC 5.10.1.7.2)

4.3 Field Preparation (continued)

NOTE *The Technical Safety Requirements for WCRRF specify that a critical lift plan is required for lifts and forklift movements involving DEGRADED or LOSS OF INTEGRITY drums. Additionally a critical lift plan is required in accordance with the requirements of P101-25, Cranes, Hoists, Lifting Devices, and Rigging Equipment, such as when the weight of the parent drum is greater than 75% of the WCG drum lift rated capacity (624 lb x .75 = 468 lb).*

[7] **IF** performing Section 6,
THEN:

[A] **DETERMINE** whether the parent drum is a degraded or loss of integrity drum, or whether the parent drum weight is greater than 468 lb but less than or equal to 624 lb, and **CHECK** (√) YES or NO on Attachment 1.

NOTE *The Person-in-Charge (PIC) appointed for the safe handling of critical loads and for the safe handling of non-critical items in, around, or above spaces in which critical items are located **SHALL** be trained as a qualified crane operator and rigger.*

[B] **($) IF** the parent drum is a degraded or loss of integrity drum, (AC 5.10.3.1)
OR the parent drum weight is greater than 468 lb but less than or equal to 624 lb,
THEN:

[a] **IDENTIFY** and **RECORD** the name of the person who will serve as the Qualified Crane Operator and Rigger PIC for lifting and forklift movements of degraded or loss of integrity drums on Attachment 2, WCRRF WCG Critical Lift Plan Concurrence Sheet.

[b] **ENSURE** that the Qualified Crane Operator and Rigger PIC performs a pre-job briefing that includes a review of Appendix 1, Waste Drum Critical Lift Plan, and **DOCUMENT** the review on Attachment 2.

4.3 Field Preparation (continued)

WARNING

1. **Performance of a pre-operational inspection of the WCG drum lift (Form 1489), SHALL ensure that the entire length of the drum lift cable is inspected. This will require that the drum lift be exercised from the full up to the full down positions.**

2. **The drum lift pendant operator is to announce operation of the lift before raising or lowering the drum and all personnel are to stand clear and to the side of drum movement in order to prevent personnel injuries.**

NOTE *The inspection criteria identified as N/A on Appendix 3, Example Preoperational Inspection record for Overhead Cranes and Hoists, are not required to be performed.*

[C] **IF** performing Section 6 for the first time for the day,
THEN PERFORM a pre-operational inspection of the WCG drum lift components in accordance with P101-25 by completing the applicable sections of Form 1489.

[8] **IF** performing WCG operations (e.g., Section 10, WCG Waste Processing),
THEN:

[A] **DETERMINE** whether the WCG glove change due date marked on each WCG gloves has been exceeded.

[B] **IF** the WCG glove change due date marked on the WCG glove has been exceeded,
OR a WCG glove or bag-in/bag-out bag fails the inspection,
THEN:

[a] **STOP** operations.

[b] **IDENTIFY** the WCG glove or bag-in/bag-out bag as out-of-service.

[c] **NOTIFY** supervision and an RCT for the applicable actions in accordance with EP-DIV-AP-20047.

4.3 Field Preparation (continued)

NOTE *WCG gloves with a glove change due date that has been exceeded are not required to be inspected in accordance with the following step.*

[C] **INSPECT** the internal and external surfaces of each WCG glove and bag-in/bag-out bag for the following:

- Layer separations
- Cuts
- Natural degradation
- Cracks
- Stiffness
- Punctures
- Splits
- Obvious physical signs of deterioration
- Discoloration
- Surface deposits/debris
- Radiological contamination (internal only)
- Exposed color of the lead liner, if present

[D] **CHECK** (√) SAT or UNSAT on Attachment 1, and **DOCUMENT** the completion of the WCG glove inspection by signing and dating on Attachment 1.

[9] **ENSURE** that glovebox inspections have been completed in accordance with EP-DIV-AP-20047.

[10] **IF** Section 10.4, Waste Splitting Activities, is to be performed,
THEN ENSURE that Low-Level Waste Characterization personnel are available, as necessary.

[11] **IF** this procedure is being performed as a High/Complex Hazard activity as determined in Section 4.1, Planning and Coordination,
THEN:

[A] **ENSURE** that the temporary lead glass windows have been attached (e.g., Velcro®) to the inside of the applicable WCG windows.

[B] **ENSURE** that lead or lead equivalent gloves have been installed on the WCG gloveports.

[C] **ENSURE** that lead blankets have been placed along the bottom of the WCG.

4.3 Field Preparation (continued)

NOTE *The following step may be performed out of sequence and may be performed in Building TA-50-37 (Artic).*

[12] **IF** a POC is to be used,
AND the POC is to be bagged onto the WCG,
THEN:

[A] **OBTAIN** a POC bag-on bag.

[B] **APPLY** vinyl tape to the POC bag-on bag, with a smear pad centered on the tape, over the filter.

[C] **INFLATE** the POC bag-on bag with air from a compressed air source.

[D] **INSPECT** the POC bag-on bag for damage, cuts, or leaks by looking, listening, and feeling.

[E] **STRETCH** the POC bag-on bag's bungee cord, and **INSPECT** the bungee cord for cuts or damage.

[F] **IF** the POC bag-on bag or bungee cord fails the inspection,
THEN:

[a] **IDENTIFY** (e.g., tag or mark) the failed item indicating that item is defective.

[b] **SEGREGATE** the failed item in order to prevent the item from being used.

NOTE 1 *A Quality Assurance (QA) representative may be contacted for assistance with the NCR process.*

NOTE 2 *The NCR may be initiated at an operationally convenient time.*

[c] **ENSURE** that an NCR is initiated in accordance with P330-6, Nonconformance Reporting, as required.

[d] **REPLACE** the defective item.

[e] **GO** to Step 4.3[12][A].

4.3 Field Preparation (continued)

NOTE *The following step may be performed out of sequence to allow for the bulk inspection of liners in order to improve operational efficiencies.*

[G] **OBTAIN** and **VISUALLY INSPECT** a POC plastic/cardboard liner ensuring the exterior surfaces are smooth.

[H] **IF** POC plastic/cardboard liner fails the inspection,
THEN:

[a] **IDENTIFY** (e.g., tag or mark) the POC plastic/cardboard liner indicating that the POC plastic/cardboard liner is defective.

[b] **SEGREGATE** the POC plastic/cardboard liner in order to prevent the item from being used.

NOTE 1 *A Quality Assurance (QA) representative may be contacted for assistance with the NCR process.*

NOTE 2 *The NCR may be initiated at an operationally convenient time.*

[c] **ENSURE** that an NCR is initiated in accordance with P330-6, Nonconformance Reporting, as required.

[d] **REPLACE** the POC plastic/cardboard liner.

[e] **GO** to Step 4.3[12][G].

[I] **PLACE** the POC plastic/cardboard liner into the POC bag-on bag.

[J] **PLACE** the POC plastic/cardboard liner and bag into the POC pipe component.

[K] **ENSURE** that excess POC bag-on bag is placed inside of the POC pipe component.

[L] **PLACE** the POC pipe component lid on the POC pipe component and **TIGHTEN** the lid sufficiently to hold the lid on the POC pipe component.

[M] **PLACE** the POC drum lid on the POC drum and **TIGHTEN** the closure ring bolt sufficiently to hold the drum lid in place.

5. PERFORMANCE—PARENT WASTE CONTAINER PREPARATION

This section is a stand-alone section and may be performed independently of or in conjunction with other Performance sections.

NOTE *Radiological surveys may be performed as determined necessary [e.g., by an RP representative (e.g., RCT)] anytime during the performance of this procedure.*

Waste Handling Technician

[1] **ENSURE** that all applicable prerequisite actions have been completed.

NOTE *Steps 5.[2] through 5.[4] may be performed in Building TA-50-37 (Artic).*

[2] **OBTAIN** an unfiltered bag-off bag or a filtered bag-off bag, and **TAPE OVER** the inside and outside filter openings of a filtered bag-off bag, as applicable.

CAUTION

Care should be exercised when not to over inflate the filtered bag. Apply only enough air to inspect for leaks. (pins holes, leakage around filter attachment points.). Failure to comply with this caution could lead to overstressing the filter and possible pre-damage to the filtered bag.

[3] **INFLATE** the filtered or no filtered bagout bag carefully and slowly while sealing the bag (i.e. securing opening with hand).

[4] **INSPECT** the bag-off bag for damage or cuts examining by sight, sound, and feel.

[5] **IF** the bag-off bag does **NOT** hold the air,
THEN:

[A] **IDENTIFY** (e.g., tag or mark) the bag-off bag indicating that the bag-off bag is defective.

[B] **SEGREGATE** the bag-off bag in order to prevent the item from being used.

NOTE *The NCR may be initiated at a time that is operationally convenient.*

[C] **ENSURE** that an NCR is initiated in accordance with P330-6, Nonconformance Reporting.

[D] **GO** to Step 5.[2].

5. PERFORMANCE—PARENT WASTE CONTAINER PREPARATION (continued)

[6] **TAPE** the drum closure ring bolt in order to prevent tearing or cutting the unfiltered bag-on bag.

[7] **IF** the drum to be processed is **NOT** a degraded or loss of integrity drum, **THEN CUT** off the bottom of a bag-off bag approximately 27 to 30 inches from the bottom of the bag-off bag in order to create a bag-off sleeve.

[8] **SLIDE** the bag-off bag over the top of the drum down to between the second and third rolling hoops (from the top) ensuring that the first and second rolling hoops (from the top) are covered.

NOTE *Enough room must be left between the tape and the drum closure ring bolt in order for the drum closure ring to be removed without damaging the bag-on bag.*

[9] **WRAP** tape (vinyl or duct) around the container so that the bag-off bag is tightly bound approximately halfway between the second and third rolling hoops near the top of the drum and overlapping the bag-off bag onto the drum.

[10] **ENSURE** that the drum wrapping (e.g., tape and bag-off bag) is airtight and no air pockets are present.

[11] **WRAP** duct tape around the drum just below the top rolling hoop.

CAUTION

Improper placement of the banding material over the drum hoop may result in movement and banding material slipping down the drum. Do <u>not</u> place banding material over drum hoop.

[12] **PLACE** banding material around the drum over the installed duct tape and **ENSURE** banding material is <u>not</u> placed over the drum hoop.

[13] **TIGHTEN** and **BUCKLE** the banding material with a banding tool.

[14] **COVER** the banding buckle with duct tape to prevent bag tears.

[15] **ROLL DOWN** the remaining bag-off bag around drum.

5. PERFORMANCE—PARENT WASTE CONTAINER PREPARATION (continued)

NOTE *The following two steps may be performed just before loading the drum on the WCG drum lift.*

[16] **IF** items (e.g., gloves or tools) are to be bagged into the WCG with the Prepared Parent Drum,
THEN SECURE the items to the top of the Prepared Parent Drum.

[17] **WEIGH** the Prepared Parent Drum with items secured to the drum top, as applicable, and **RECORD** the Prepared Parent Drum Weight on Attachment 1.

[18] **IF** the Prepared Parent Drum Weight is greater than or equal to 624 lb,
THEN:

[A] **STOP** the work activity.

NOTE *The WCRRF Operations Center notifies the Transuranic (TRU) Waste Disposition Project (WDP) Operations Manager (OM) or designee and the Shift Operations Supervisor (SOS) of the discrepancy.*

[B] **NOTIFY** the WCRRF Operations Center of the discrepancy.

[C] **REQUEST** the applicable actions from the SOS or designee.

[19] **RECORD** the following information on the parent drum lid using a permanent marker:
- Parent drum number
- Parent drum weight
- Date
- Platform scale serial number
- Platform scale calibration due date

6. PERFORMANCE—WCG PARENT DRUM LOADING/UNLOADING

NOTE *Radiological surveys may be performed as determined necessary [e.g., by an RP representative (e.g., RCT)] anytime during the performance of this procedure.*

6.1 WCG Drum Lift Daily Inspection

This sub-section is a stand-alone sub-section and may be performed independently of or in conjunction with other sub-sections.

This inspection is to be performed once each work day before the WCG drum lift is to be used to hoist a waste drum.

NOTE *The individual performing the WCG drum lift inspection **SHALL** be at a minimum a certified Qualified Crane Operator.*

Waste Handling Technician

[1] **OBTAIN** and **REVIEW** the previously completed copy of Attachment 3, WCRRF WCG Drum Lift Inspection Data Sheet.

[2] **OBTAIN** a new copy of attachment 3, and **RECORD** the inspection date on Attachment 3.

[3] **RECORD** any previously identified wire rope damage in Table 3-1 or Table 3-2, or N/A as applicable, on Attachment 3, and **CHECK** (√) applicable box in the Previously Identified Damage column in Table 3-1 or Table 3-2, as applicable, on Attachment 3.

[4] **RECORD** the number of threads exposed out the end of the shaft bolt locknut on the upper, middle, and lower pulley shaft bolts from the previous inspection on Attachment 3.

6.1 WCG Drum Lift Daily Inspection (continued)

[5] **DETERMINE** and **RECORD** on Attachment 3 the current number of threads exposed out the end of the shaft bolt locknut on the upper, middle, and lower pulley shaft bolts (see illustration below).

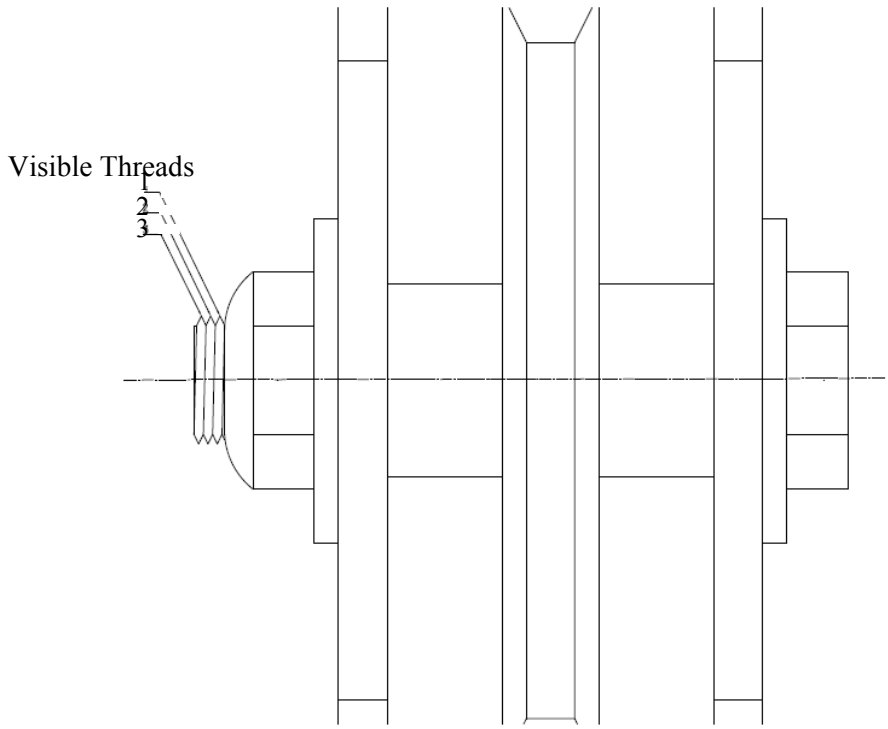

[6] **DETERMINE** whether the shaft bolt end is flush with or extends out of the outer end of the shaft bolt locknut, and **CHECK** (√) YES or NO on Attachment 3.

[7] **INSPECT** the upper, middle, and lower pulley shaft bolts for any signs of wear between the shaft bolt and the support flanges (e.g., shaft not perpendicular to the flange plate), and **CHECK** (√) SAT or UNSAT for each shaft bolt on Attachment 3.

WARNING

The drum lift pendant operator is to announce operation of the lift before raising or lowering the drum and all personnel are to stand clear and to the side of drum movement in order to prevent personnel injuries.

[8] **ENSURE** that the drum trolley is in the full-down position.

6.1 WCG Drum Lift Daily Inspection (continued)

WARNING

Cut resistant (e.g., leather or leather palm mechanics) gloves are to be worn while inspecting the drum trolley wire rope and the cloth is to be held loosely in order to prevent skin punctures resulting from broken wires of the wire rope.

[9] **INSPECT** the entire length of the exposed, upper wire rope from the top of the drum trolley to the wire rope hoist drum by loosely gripping the cloth (e.g., cheese cloth) while sliding the cloth along the length of the wire rope, and **CHECK** (√) YES or NO to indicate whether any new damage is identified on Attachment 3 to indicate whether any upper wire rope damage is discovered.

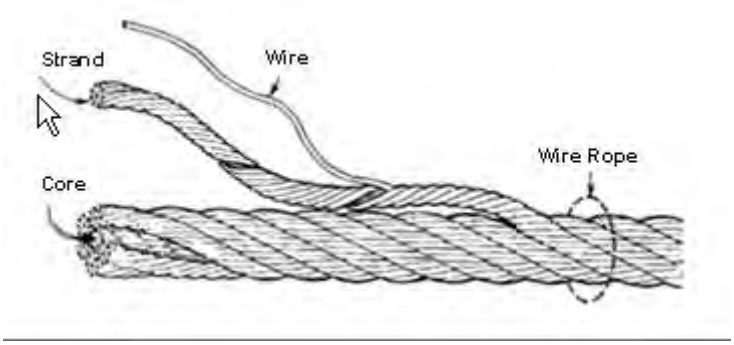

[10] **IF** the cloth snags on the wire rope,
THEN VISUALLY INSPECT the wire rope snag location for damage, and
DOCUMENT the results of the inspection including the location of the damage in Table 3-1, Upper Wire Rope Damage, on Attachment 3.

WARNING

The drum lift pendant operator is to announce operation of the lift before raising or lowering the lift and all personnel are to stand clear and to the side of drum movement in order to prevent personnel injuries.

[11] **ENSURE** that the drum trolley is in the full-up position.

6.1 WCG Drum Lift Daily Inspection (continued)

WARNING

Cut resistant (e.g., leather or leather palm mechanics) gloves are to be worn while inspecting the drum trolley wire rope and the cloth is to be held loosely in order to prevent skin punctures resulting from broken wires of the wire rope.

[12] **INSPECT** the entire length of the exposed, lower wire rope from the top of the drum trolley to the wire rope hoist by loosely gripping the cloth (e.g., cheese cloth) while sliding the cloth along the length of the wire rope, and **CHECK** (√) YES or NO to indicate whether any new damage is identified on Attachment 3 to indicate whether any lower wire rope damage is discovered.

[13] **IF** the cloth snags on the wire rope,
THEN VISUALLY INSPECT the wire rope snag location for damage, and **DOCUMENT** the results of the inspection including the location of the damage in Table 3-2, Lower Wire Rope Damage, on Attachment 3.

[14] **IF** there is more than <u>one</u> wire break within a 2-in. span along the wire rope,
THEN:

[A] **CHECK** (√) UNSAT for the wire rope inspection on Attachment 3.

[B] **GO** to Step 6.1[16].

[15] **CHECK** (√) SAT for the wire rope inspection on Attachment 3.

[16] **IF** UNSAT was checked (√) for any of the WCG inspections,
THEN:

[A] **STOP** the work activity.

[B] **SIGN** and **DATE** on Attachment 3.

NOTE *The WCRRF Operations Center notifies the WDP SOM or designee and the Cognizant System Engineer (CSE) of the discrepancy.*

[C] **NOTIFY** the WCRRF Operations Center of the discrepancy.

[D] **DOCUMENT** the notifications and discrepancies in the Comments section of Attachment 3.

6.2 Parent Drum Loading

This sub-section is a stand-alone sub-section and may be performed independently of or in conjunction with other sub-sections.

Waste Handling Technician

[1] **ENSURE** that all applicable prerequisite actions have been completed.

RCT

[2] **PERFORM** radiological surveys as necessary during the waste container handling evolutions.

Waste Handling Technician

[3] **IF** radiological contamination is detected,
THEN FOLLOW the instructions of the RCT and RWP.

[4] **RECORD** the Processing Date (current date) on Attachment 1, WCRRF WCG Waste Processing Data Sheet.

[5] **IF** lead blankets are to be used as radiological shielding on the parent drum,
THEN:

[A] **WEIGH** the lead blankets, as necessary, and **RECORD** the lead blanket's weight on Attachment 1.

[B] **SUM** the Lead Blanket Weights and the Prepared Parent Drum Weight, and **RECORD** the Total Prepared Parent Drum Weight (drum and lead blankets) on Attachment 1.

[C] **GO** to Step 6.2[7].

[6] **RECORD** the Total Prepared Parent Drum Weight (parent drum weight) on Attachment 1.

[7] **($) DETERMINE** whether the Total Parent Drum Weight is less than 624 lb, and **CHECK** (√) SAT or UNSAT for the Total Parent Drum weighing less than 624 lb on Attachment 1. (SR 4.5.1)

6.2 Parent Drum Loading (continued)

[8] **IF** the Total Parent Drum Weight is greater than or equal to 624 lb,
THEN:

[A] **STOP** the work activity.

NOTE *The WCRRF Operations Center notifies the TRU WDP OM or designee and the SOS of the drum status.*

[B] **NOTIFY** the WCRRF Operations Center, of the drum status.

[C] **REQUEST** the applicable actions from the SOS or designee.

NOTE *P101-25 and Appendix 1, Waste Drum Critical Lift Plan, provide instructions for a drum critical lift.*

[9] **($) IF** the prepared parent drum is a degraded or loss of integrity drum, (AC 5.10.3.1)
OR the parent drum weight is greater than 468 lb,
THEN ENSURE that the prepared parent drum is loaded in compliance with Appendix 1 and this sub-section.

[10] **ENSURE** that the drum lift key has been obtained from the key box.

[11] **ENSURE** that the drum lift key has been inserted, and has been turned to ON in order to establish power to the drum lift.

[12] **ENSURE** that the drum lift has been lowered to the lower limit switch or until the bellyband of the lift cradle can grasp the drum evenly using the drum lift pendent.

[13] **IF** the WCG parent drum port cover is present,
THEN REMOVE the WCG parent drum port cover, and **SET** the WCG parent drum port cover aside.

[14] **ENSURE** that respiratory protection is worn as required by the applicable RWP.

[15] **LOOSEN** the drum closure ring bolt jam nut, as necessary, <u>without loosening the closure ring bolt</u>.

6.2 Parent Drum Loading (continued)

NOTE *The retaining clip (e.g., E-clip) must be an ML-2 component.*

[16] **INSPECT** the four drum lift hinge pins to determine whether all hinge pins have retaining clips (e.g., E-clips) attached to the bottom of the hinge pins.

[17] **IF** a retaining clip is missing from a hinge pin,
THEN:

[A] **STOP** the work activity.

[B] **NOTIFY** the WCRRF Operations Center of the hinge pin status.

Operations Center Operator or designee

[C] **REQUEST** that the SOM evaluate the need to enter LCO 3.5.

Waste Handling Technician

[18] **POSITION** the prepared parent drum on the drum lift with the prepared parent drum closure ring bolt accessible for lid removal when the drum closure ring is inside of the WCG.

[19] **CLOSE** and **SECURE** the bellyband on the prepared parent drum, ensuring that the bag-off sleeve does not get caught on the bellyband.

[20] **ENSURE** that the retaining clips are properly seated in the groove at the bottom of the hinge pins.

6.2 Parent Drum Loading (continued)

[21] **IF** a retaining clip is missing from a hinge pin,
THEN:

[A] **STOP** the work activity.

[B] **NOTIFY** the WCRRF Operations Center of the hinge pin status.

Operations Center Operator or designee

[C] **REQUEST** that the SOM evaluate the need to enter LCO 3.5.

WARNING

Failure to ensure the Trolley Clamp is positioned next to the WCG prior to lowering or raising the drum lift could lead to equipment damage and personnel injury.

[22] **IF** the Trolley Rail clamp is to be used,
AND is not on the drum rail,
THEN PLACE the trolley rail clamp on the rail and **POSITION** next to the WCG.

[23] **RAISE** the prepared parent drum to the WCG parent drum port using the drum lift pendent, leaving an adequate gap (approximately 12 in.) to attach the bag-off sleeve to the WCG parent drum port.

[24] **BAG ON** the prepared parent drum to the WCG parent drum port in accordance with section 7.1, Parent Drum Bag On, and **RETURN** to the following step.

WARNING

Downward movement of the parent drum could result in the drum bag-off bag separating from the WCG drum port and resulting in the spread of radiological contamination.

[25] **TURN** the drum lift key to OFF, and **REMOVE** the drum lift key, as applicable.

[26] **PLACE** the drum lift key in the key box, as applicable.

6.2 Parent Drum Loading (continued)

[27] **IF** the parent drum is to remain attached to the WCG overnight,
THEN OBTAIN the Environmental and Waste Management Facility Operations-Facility Operations Director (EWMO-FOD) approval to leave the parent drum attached to the WCG overnight, and **DOCUMENT** the approval on Attachment 1.

[28] **IF** the EWMO-FOD does **NOT** approve leaving a parent drum attached to the WCG overnight,
THEN ENSURE that the parent drum is removed before the end of the work day.

[29] **PROCESS** the waste in the parent drum in accordance with Section 10, WCG Waste Processing.

6.3 Parent Drum Unloading

This sub-section is a stand-alone sub-section and may be performed independently of or in conjunction with other sub-sections.

Waste Handling Technician

[1] **ENSURE** that all applicable prerequisite actions have been completed.

[2] **ENSURE** that the parent drum has been bagged off of the WCG in accordance with Section 7.2, Parent Drum Bag Off.

RCT

[3] **PERFORM** radiological surveys as necessary during the waste container handling evolutions.

Waste Handling Technician

[4] **IF** radiological contamination is detected,
THEN FOLLOW the instructions of the RCT and RWP.

[5] **ENSURE** that the drum lift key has been obtained from the key box.

[6] **ENSURE** that the drum lift key has been inserted, and **TURN** the drum lift key to ON in order to establish power to the drum lift.

6.3 Parent Drum Unloading (continued)

WARNING

The drum lift pendant operator is to announce operation of the lift before raising or lowering the drum and all personnel are to stand clear and to the side of drum movement in order to prevent personnel injuries.

[7] **POSITION** a drum dolly to receive the parent drum.

WARNING

Personnel SHALL <u>not</u> place any portion of the body (e.g., hands or arms) under an elevated load in order to prevent serious personal injury.

[8] **LOWER** the parent drum down onto the drum dolly using the drum lift pendent.

[9] **OPEN** the drum bellyband, and **UNLOAD** the parent drum from the drum lift.

[10] **IF** no additional drums are to be loaded with the WCG drum lift,
THEN:

[A] **SECURE** the drum bellyband.

[B] **RAISE** the drum lift to the desired height for stowing using the drum lift pendent.

[C] **TURN** the drum lift key to OFF, and **REMOVE** the drum lift key.

[D] **PLACE** the drum lift key in the key box.

[11] **TAPE** the bagged off parent drum horsetail using vinyl tape.

[12] **PLACE** a layer of containment (e.g., the cutoff end of the parent drum bagged off bag or piece of plastic) over the drum lid.

[13] **TAPE** the entire parent drum lid using vinyl tape.

6.3 Parent Drum Unloading (continued)

NOTE 1 *The RCRA Hazardous Waste Codes of a parent container do not apply to the empty parent container or the empty parent container label when the empty parent container satisfies the RCRA definition of an empty container in 40 CFR 261.7, Residues of Hazardous Waste in Empty Containers. http://edocket.access.gpo.gov/cfr_2009/julqtr/pdf/40cfr261.7.pdf.*

NOTE 2 *The following steps may be performed at a time that is operationally convenient.*

[14] **OVERPACK** the empty parent drum in accordance with EP-WCRR-WO-DOP-0236, WCRRF Loading/Unloading SWB or 85-gal Drum.

[15] **MOVE** the empty parent drum to a transportainer in accordance with EP-WCRR-WO-DOP-0202, WCRRF and Building TA-50-69 Waste Container Receipt, Movement, and Transfer.

[16] **ENSURE** that the Inventory Control Personnel have been notified that the empty parent drum has been removed from Building TA-50-69.

7. PERFORMANCE—WCG PARENT DRUM BAG-ON/BAG-OFF OPERATIONS

NOTE *Radiological surveys may be performed as determined necessary [e.g., by an RP representative (e.g., RCT)] anytime during the performance of this procedure.*

7.1 Parent Drum Bag On

This sub-section is a stand-alone sub-section and may be performed independently of or in conjunction with other sub-sections.

Waste Handling Technician

[1] **ENSURE** that all applicable prerequisite actions have been completed.

[2] **WEAR** respiratory protection as required by the applicable RWP.

RCT

[3] **PERFORM** radiological surveys as necessary during the waste container handling evolutions.

Waste Handling Technician

[4] **IF** radiological contamination is detected,
THEN FOLLOW the instructions of the RCT and RWP.

[5] **ENSURE** the parent drum has been loaded onto the WCG in accordance with Section 6.2, Parent Drum Loading.

[6] **ENSURE** that the WCG has been wiped down to reduce radiological contamination.

[7] **SET UP** a portable HEPA-filter exhaust system (MAC-21) in order to increase local airflow at the site of the horsetail during the cutting operation.

[8] **REMOVE** the retaining band from the WCG parent drum port bag-off stub.

[9] **VISUALLY INSPECT** the WCG parent drum port bag-off stub for damage (e.g., tears).

[10] **IF** the WCG parent drum port bag-off stub is damaged (e.g., tears),
THEN:

[A] **REPAIR** the damage (e.g., tears) using vinyl tape.

[B] **REQUEST** an RCT survey for radiological contamination.

7.1 Parent Drum Bag On (continued)

[C] **IF** radiological contamination is detected,
THEN FOLLOW the instructions of the RCT and RWP.

[11] **SLIDE** the bag-off stub down to the outer ring of the WCG parent drum port.

[12] **SWIPE** around the WCG parent drum port with a maslin smear, and **REQUEST** an RCT monitor the swipe for radiological contamination.

[13] **IF** radiological contamination is detected,
THEN FOLLOW the instructions of the RCT and RWP.

NOTE *The new bag-on bag is attached to the parent drum.*

[14] **SLIDE** the new bag-on bag over the old bag-on bag stub to the inner ring of the WCG parent drum port.

[15] **APPLY** vinyl tape to the new bag-on bag where the retaining band buckle is to be placed.

[16] **SECURE** the new bag-on bag with the retaining band.

[17] **REMOVE** the bag-off stub from the WCG parent drum port, and **DROP** the bag-off stub into the glovebox.

WARNING

The drum lift pendant operator is to announce operation of the lift before raising or lowering the drum and all personnel are to stand clear and to the side of drum movement in order to prevent personnel injuries.

[18] **ALTERNATELY RAISE** the parent drum and **GUIDE** the bag-on bag to prevent damage to the bag-on bag until the parent drum has been raised to the upper limit switch or until the drum is adequately inserted.

7.1 Parent Drum Bag On (continued)

NOTE *The Trolley Rail Clamp is used at the discretion of the PIC, and/or when processing heavy drums to act as a rail stop to restrict forward drum movement when removing heavy items from drum into glovebox.*

[19] **IF** the Trolley Rail Clamp is to be used,
THEN:

[A] **SLIDE** the Trolley Rail Clamp against the drum trolley rail assembly next to the lifting fixture.

[B] **TIGHTEN** the Trolley Rail clamp handle clockwise to secure the clamp against the drum trolley.

7.2 Parent Drum Bag Off

This sub-section is a stand-alone sub-section and may be performed independently of or in conjunction with other sub-sections.

Waste Handling Technician

[1] **ENSURE** that all applicable prerequisite actions have been completed.

[2] **WEAR** respiratory protection as required by the applicable RWP.

RCT

[3] **PERFORM** radiological surveys as necessary during the waste container handling evolutions.

Waste Handling Technician

[4] **IF** radiological contamination is detected,
THEN FOLLOW the instructions of the RCT and RWP.

[5] **IF** Trolley Rail Clamp was used,
THEN LOOSEN handle counterclockwise and **SLIDE** the Trolley Rail Clamp away from the drum trolley (towards the WCG).

[6] **PLACE** the drum lid and drum closure ring bolt are on the parent waste drum.

7.2 Parent Drum Bag Off (continued)

[7] **IF** the parent drum closure ring **CANNOT** be properly attached to the parent drum, **AND** the parent drum is empty,
THEN:

[A] **AFFIX** the closure ring, if possible, to the parent drum and **TAPE** the parent drum lid onto the drum using vinyl tape or equivalent.

[B] **GO** to Step 7.2[11].

NOTE *The removal of a parent drum from the WCG which contains waste material must be performed as a critical lift.*

[8] **IF** the parent drum closure ring **CANNOT** be properly attached to the parent drum, **AND** the parent drum contains waste material,
THEN:

[A] **STOP** the activity and place waste material in a safe configuration (e.g., cover with a fire blanket).

[B] **NOTIFY** supervision and the WCRRF Operations Center of the discrepancy and **REQUEST** the applicable actions.

[9] **ENSURE** that the drum closure ring bolt jam nut is tightened against the non-threaded lug of the drum closure ring.

[10] **ENSURE** that duct tape has been placed on the drum closure ring bolt in order to prevent damage to the bag-off sleeve.

[11] **ENSURE** that the WCG has been wiped down to reduce radiological contamination.

[12] **SET UP** a portable HEPA-filter exhaust system (MAC-21) to increase local airflow at the site of the horsetail during the cutting operation.

[13] **OBTAIN** the drum lift key from the key box, as applicable.

[14] **INSERT** the drum lift key, and **TURN** the drum lift key to ON in order to establish power to the drum lift, as applicable.

7.2 Parent Drum Bag Off (continued)

WARNING

The drum lift pendant operator is to announce operation of the lift before raising or lowering the drum and all personnel are to stand clear and to the side of drum movement in order to prevent personnel injuries.

[15] **LOWER** the parent drum sufficiently to create a horsetail using the drum lift pendent.

[16] **INSPECT** the bag-off bag for damage (e.g., tears).

[17] **IF** bag-off bag is damaged (e.g., tears),
THEN:

[A] **REPAIR** the damage (e.g., tears) using vinyl tape.

[B] **REQUEST** an RCT survey for radiological contamination.

[C] **IF** radiological contamination is detected,
THEN FOLLOW the instructions of the RCT and RWP.

[18] **MIST** inside of the bag-off bag with spray cleaner and **RUB** the bag-off bag together to ensure the complete coverage of the spray cleaner in order to control contamination.

[19] **SQUEEZE** as much air as possible out of the bag-off bag.

[20] **GATHER** the bag-off bag and **COMPRESS** the bag-off bag in order to create a horsetail approximately 8 to 10 in. long.

[21] **TIGHTLY SECURE** the horsetail with vinyl tape or filament tape.

[22] **FIRMLY ATTACH** two binding ties near the center of the horsetail, approximately 6 in. apart.

[23] **IF** bagging off the last parent drum for the work day,
THEN FIRMLY ATTACH a second binding tie approximately 2 in. from the center of the horsetail on the WCG side of the horsetail.

7.2 Parent Drum Bag Off (continued)

NOTE *The excess part of the binding tie protruding through the binding tie latch is not to be cut off.*

[24] **COVER** the attached binding ties with vinyl tape.

Waste Handling Technician Three

[25] **POSITION** the horsetail cutters between the binding ties of the horsetail.

Waste Handling Technician One

[26] **GRASP** the top of horsetail.

Waste Handling Technician Two

[27] **GRASP** the bottom of horsetail.

WARNING

Extremities SHALL not be placed inside the jaws of the cutting tool in order to prevent personnel injury due to pinching.

Waste Handling Technician Three

[28] **CUT** the horsetail between the binding ties.

Waste Handling Technician One and Two

[29] **SIMULTANEOUSLY COVER** the cut stubs of the bag-off bag with vinyl tape.

[30] **ENSURE** that the cut-stubs have been covered with a final layer of vinyl tape, as directed by an RCT.

NOTE 1 *Used cheesecloth are to be disposed of as compactable waste.*

NOTE 2 *The following step may be performed out of sequence.*

Waste Handling Technician Three

[31] **WIPE** down the cutters used to cut the horsetail, place the cutters in a holder, and place the cutters in the designated staging area.

7.2 Parent Drum Bag Off (continued)

NOTE *Used cheesecloth are to be disposed of in the compactable waste container.*

Waste Handling Technician

[32] **DECONTAMINATE**, as necessary, in accordance with RCT instructions.

[33] **REMOVE** the empty parent drum from the WCG drum lifting device in accordance with Section 6.3, Parent Drum Unloading.

8. PERFORMANCE—WCG DAUGHTER DRUM, BAGPORT, OR GLOVEPORT BAG-ON/BAG-OFF OPERATIONS

NOTE *Radiological surveys may be performed as determined necessary [e.g., by an RP representative (e.g., RCT)] anytime during the performance of this procedure.*

8.1 Bag On Daughter Drum, Bagport, or Gloveport

This sub-section is a stand-alone sub-section and may be performed independently of or in conjunction with other sub-sections.

NOTE *This section provides instructions for bagging onto the WCG at a daughter drum port, bagport, or gloveport.*

Waste Handling Technician

[1] **ENSURE** that all applicable prerequisite actions have been completed.

[2] **IF** a daughter drum is to be bagged onto the WCG,
THEN ENSURE that the daughter drum has been prepared in accordance with EP-WCRR-WO-DOP-0221.

[3] **WEAR** respiratory protection as required by the applicable RWP.

RCT

[4] **PERFORM** radiological surveys as necessary during the waste container handling evolutions.

Waste Handling Technician

[5] **IF** radiological contamination is detected,
THEN FOLLOW the instructions of the RCT and RWP.

[6] **ENSURE** that the WCG has been wiped down to reduce radiological contamination.

[7] **IF** directed by an RCT to establish a portable HEPA-filter exhaust system,
THEN SET UP a portable HEPA-filter exhaust system (MAC-21)in order to increase the local airflow at the site of the horsetail during the cutting operation.

[8] **REMOVE** the retaining band from the bag-off stub.

[9] **VISUALLY INSPECT** under the retaining band of the previous drum/bagport/gloveport bag-off stub for damage (e.g., tears).

8.1 Bag On Daughter Drum, Bagport, or Gloveport (continued)

[10] **IF** the previous drum/bagport/gloveport bag-off stub is damaged (e.g., tears),
THEN SEAL the damaged area with vinyl tape.

[11] **SLIDE** the bag-off stub down to the outer ring of the port (drum, bagport, or gloveport).

[12] **SWIPE** around the port with a maslin smear, and **REQUEST** an RCT monitor the swipe for radiological contamination.

[13] **IF** radiological contamination is detected,
THEN FOLLOW the instructions of the RCT and RWP.

[14] **SLIDE** a new bag-on bag over the bag-off stub.

[15] **ADHERE** vinyl tape to the new bag-on bag where the retaining band buckle is to be placed.

[16] **SECURE** the new bag with the retaining band.

[17] **REMOVE** the bag-off bag stub and drop the bag-off bag stub into the daughter drum/bagport bag/gloveport bag, as applicable.

[18] **IF** bagging on a daughter drum,
THEN:

[A] **MOVE** the drum from the drum dolly to the vertical lift table.

[B] **MANUALLY RAISE** the drum to the appropriate height.

8.2 Bag Off Daughter Drum

This sub-section is a stand-alone sub-section and may be performed independently of or in conjunction with other sub-sections.

NOTE *This section provides instructions for bagging off a daughter drum from the WCG.*

Waste Handling Technician

[1] **ENSURE** that all applicable prerequisite actions have been completed.

[2] **WEAR** respiratory protection as required by the applicable RWP.

RCT

[3] **PERFORM** radiological surveys as necessary during the waste container handling evolutions.

Waste Operator

[4] **IF** radiological contamination is detected,
THEN FOLLOW the instructions of the RCT and RWP.

[5] **ENSURE** that the WCG has been wiped down to reduce radiological contamination.

[6] **SET UP** a portable HEPA-filter exhaust system (MAC-21) in order to increase the local airflow at the site of the horsetail during the cutting operation.

[7] **MANUALLY LOWER** the vertical lift table.

[8] **INSPECT** the bag-off bag for damage (e.g., tears).

[9] **IF** the bag-off bag is damaged (e.g., tears),
THEN:

[A] **REPAIR** the damage (e.g., tears) using vinyl tape.

[B] **REQUEST** an RCT survey for radiological contamination.

[C] **IF** radiological contamination is detected,
THEN FOLLOW the instructions of the RCT and RWP.

8.2 Bag Off Daughter Drum (continued)

WARNING

Proper lifting techniques and buddy system SHALL be used when moving a daughter drum from the lift table to the drum dolly in order to prevent personnel injury and to prevent separating the daughter drum bag-off bag from the WCG daughter drum port.

NOTE *A VersaLift may be used to assist the lifting of a drum off of the vertical lift table.*

[10] **MOVE** the drum from the vertical lift table to a drum dolly.

[11] **MIST** inside of the bag-off bag with spray cleaner and **RUB** the bag-off bag together to ensure the complete coverage of the spray cleaner in order to control contamination.

[12] **SQUEEZE** as much air as possible out of the bag-off bag.

[13] **GATHER** the bag-off bag.

[14] **ROTATE** the drum <u>or</u> **COMPRESS** the bag-off bag (as applicable) in order to create a horsetail approximately 8 to 10 in. long.

[15] **TIGHTLY SECURE** the horsetail with vinyl tape or filament tape.

[16] **FIRMLY ATTACH** two binding ties near the center of the horsetail, approximately 6 in. apart.

NOTE *The excess part of the binding tie protruding through the binding tie latch is <u>not</u> to be cut off.*

[17] **COVER** the attached binding ties with vinyl tape.

Waste Handling Technician Three

[18] **POSITION** the horsetail cutters between the binding ties of the horsetail.

Waste Handling Technician One

[19] **GRASP** top of horsetail.

8.2 Bag Off Daughter Drum (continued)

Waste Handling Technician Two

[20] **GRASP** the bottom of the horsetail.

WARNING

Extremities SHALL <u>not</u> be placed inside the jaws of the cutting tool in order to prevent personnel injury due to pinching.

Waste Handling Technician Three

[21] **CUT** the horsetail between the binding ties.

Waste Handling Technician One and Two

[22] **SIMULTANEOUSLY COVER** the cut stubs of the bag-off bag with vinyl tape.

[23] **ENSURE** that the cut-stubs have been covered with a final layer of vinyl tape, as directed by an RCT.

NOTE 1 *Used cheesecloth **SHALL** be disposed of as compactable waste.*

NOTE 2 *The following step may be performed out of sequence.*

Waste Handling Technician Three

[24] **WIPE** down the cutters used to cut the horsetail, place the cutters in a holder, and place the cutters in the designated staging area.

Waste Handling Technician

[25] **IF** the bag-off bag has a filter that is covered with tape,
THEN:

[A] **REMOVE** the tape from bag filter.

[B] **REQUEST** an RCT survey for radiological contamination.

[C] **IF** radiological contamination is detected,
THEN FOLLOW the instructions of the RCT and RWP.

8.2 Bag Off Daughter Drum (continued)

[26] **IF** a POC was bagged off of the WCG,
THEN GO to Step 10.2[13].

NOTE 1 *Waste containers with liquids (any amount or configuration) that have not been solidified (absorbed) must be managed on secondary containment pallets and have a FREE LIQUID label affixed.*

NOTE *All parent drum RCRA Hazardous Waste Codes are not assigned to a daughter drum when the reason (item) for assigning a RCRA Hazardous Waste Code to the parent drum has not been placed into the daughter drum. The WMC can assist with assigning the appropriate RCRA Hazardous Waste Codes to a drum.*

[27] **CLOSE** the daughter drum in accordance with EP-WCRR-WO-DOP-0221.

[28] **ENSURE** that the Inventory Control Personnel have been notified that daughter drums and an empty parent drum have been generated in Building TA-50-69.

9. PERFORMANCE—ITEM BAG-IN/BAG-OUT OPERATIONS

NOTE *Radiological surveys may be performed as determined necessary [e.g., by an RP representative (e.g., RCT)] anytime during the performance of this procedure.*

9.1 WCG Item Bag-Out

This sub-section is a stand-alone sub-section and may be performed independently of or in conjunction with other sub-sections.

Waste Handling Technician

[1] **ENSURE** that all applicable prerequisite actions have been completed.

[2] **WEAR** respiratory protection as required by the applicable RWP.

RCT

[3] **PERFORM** radiological surveys as necessary during the waste container handling evolutions.

Waste Handling Technician

[4] **IF** radiological contamination is detected,
THEN FOLLOW the instructions of the RCT and RWP.

[5] **ENSURE** that a portable CAM is placed in the vicinity of the filtered bagout bag during WCG operations as directed by RP-1.

[6] **IF** a bag is required on the WCG port,
THEN:

[A] **ENSURE** that the WCG has been wiped down to reduce radiological contamination.

[B] **SET UP** a portable HEPA-filter exhaust system (MAC-21) and elephant trunk as close as possible to the filtered bagout bag in order to increase the local airflow at the site of the horsetail during the cutting operation.

NOTE *Glovebox negative pressure **SHALL** be used to the extent possible in order to remove excess air from the filtered bag-out bag during bagout operations.*

[C] **REMOVE** the retaining band from the drum/bagport/gloveport bag-out stub.

9.1 WCG Item Bag-Out (continued)

[D] **VISUALLY INSPECT** under the retaining band of the previous drum/bagport/gloveport bag-out stub for damage (e.g., tears).

[E] **IF** the previous drum/bagport/gloveport bag-out stub is damaged (e.g., tears), **THEN SEAL** the damaged area with vinyl tape.

[F] **SLIDE** the bag-out stub down to the outer ring of the port (drum, bagport, or gloveport).

[G] **SWIPE** around the port with a maslin smear, and **REQUEST** an RCT monitor the swipe for radiological contamination.

[H] **IF** radiological contamination is detected,
THEN FOLLOW the instructions of the RCT and RWP.

[I] **SLIDE** new bag-on bag over the bag-out stub.

[J] **ADHERE** vinyl tape to the new bag-on bag where the retaining band buckle is to be placed.

[K] **SECURE** the new bag-on bag with the retaining band.

[L] **REMOVE** the bag-out bag stub and drop the bag-out bag stub into the daughter drum/bagport bag/gloveport bag, as applicable.

[7] **ENSURE** that the WCG has been wiped down to reduce radiological contamination.

[8] **ENSURE** a portable HEPA-filter exhaust system (MAC-21) and elephant trunk are set up as close as possible to the filtered bagout bag in order to increase the local airflow at the site of the horsetail during the cutting operation.

[9] **SLIDE** the item to be bagged out to the end of the bag-out bag.

[10] **INSPECT** the bag-out bag for damage (e.g., tears).

[11] **IF** the bag-out bag is damaged (e.g., tears),
THEN:

[A] **REPAIR** the damage (e.g., tears) using vinyl tape.

9.1 WCG Item Bag-Out (continued)

[B] **REQUEST** an RCT survey for radiological contamination.

[C] **IF** radiological contamination is detected,
THEN FOLLOW the instructions of the RCT and RWP.

[12] **MIST** inside of the bag-out bag with spray cleaner and **RUB** the bag-out bag together to ensure the complete coverage of the spray cleaner in order to control contamination.

[13] **SQUEEZE** as much air as possible out of the bag-out bag.

[14] **GATHER** the bag-out bag.

[15] **ROTATE** the drum <u>or</u> **COMPRESS** the bag-out bag (as applicable) in order to create a horsetail approximately 8 to 10 in. long.

[16] **TIGHTLY SECURE** the horsetail with vinyl tape or filament tape.

[17] **ENSURE** that the horsetail is located far enough away from the filtered bagout bag to avoid creasing, folding, or otherwise challenging the integrity of the filter.

[18] **FIRMLY ATTACH** two binding ties near the center of the horsetail, approximately 6 in. apart.

[19] **IF** bagging out the last item for the work day,
THEN FIRMLY ATTACH a second binding tie approximately 2 in. from the center of the horsetail on the WCG side of the horsetail.

NOTE *The excess part of the binding tie protruding through the binding tie latch tie is <u>not</u> to be cut off.*

[20] **COVER** the attached binding ties with vinyl tape.

Waste Handling Technician Three

[21] **POSITION** the horsetail cutters between the binding ties of the horsetail.

Waste Handling Technician One

[22] **GRASP** top of horsetail.

9.1 WCG Item Bag-Out (continued)

Waste Handling Technician Two

[23] **GRASP** bottom of horsetail.

WARNING

Extremities SHALL <u>not</u> be placed inside the jaws of the cutting tool in order to prevent personnel injury due to pinching.

Waste Handling Technician Three

[24] **CUT** the horsetail between the binding ties.

Waste Handling Technician One and Two

[25] **SIMULTANEOUSLY COVER** the cut stubs of the bag-out bag with vinyl tape.

[26] **ENSURE** that the cut-stubs have been covered with a final layer of vinyl tape, as directed by an RCT.

NOTE 1 *Used cheesecloth **SHALL** be disposed of as compactable waste.*

NOTE 2 *The following step may be performed out of sequence.*

Waste Handling Technician Three

[27] **WIPE** down the cutters used to cut the horsetail, and **PLACE** the cutters in a holder, and **PLACE** the cutters in the designated staging area.

Waste Handling Technician

[28] **IF** the bag-out bag has a filter that is covered with tape,
THEN:

[A] **REMOVE** the tape from bag filter.

[B] **REQUEST** an RCT survey for radiological contamination.

[C] **IF** radiological contamination is detected,
THEN FOLLOW the instructions of the RCT and RWP.

9.2 WCG Introductory Port

This sub-section is a stand-alone sub-section and may be performed independently of or in conjunction with other sub-sections.

NOTE *This sub-section provides instructions for introducing items into the WCG.*

WARNING

Items are not to be removed from the WCG using the airlock since items placed in the airlock from the interior of the WCG are possibly radiologically contaminated.

Waste Handling Technician

[1] **ENSURE** that all applicable prerequisite actions have been completed.

[2] **PREPARE** the area in accordance with RCT instructions.

[3] **WEAR** respiratory protection as required by the applicable RWP.

RCT

[4] **PERFORM** radiological surveys as necessary during the waste container handling evolutions.

Waste Handling Technician

[5] **IF** radiological contamination is detected,
THEN FOLLOW the instructions of the RCT and RWP.

WARNING

Both WCG airlock doors are to remain closed until they must be opened to introduce an item into the WCG in order to prevent releasing radiological contamination out of the WCG.

[6] **ENSURE** that both WCG Introductory Port doors are securely closed.

9.2 WCG Introductory Port (continued)

[7] **OPEN** the outer WCG Introductory Port door.

WARNING

Items are to be placed inside of the WCG airlock in a manner that does <u>not</u> disturb the WCG airlock surfaces in order to mitigate the spread of radiological contamination.

[8] **GENTLY PLACE** the item to be introduced into the WCG airlock.

[9] **CLOSE** the outer WCG Introductory Port door.

[10] **OPEN** the inner WCG Introductory Port door.

[11] **REMOVE** the item from the WCG Introductory Port and **PLACE** the item in the WCG.

[12] **CLOSE** the inner WCG Introductory Port door.

[13] **VERIFY** that both WCG Introductory Port doors are securely closed.

10. PERFORMANCE—WCG WASTE PROCESSING

This section is a stand-alone section and may be performed independently of or in conjunction with other Performance sections.

NOTE *Radiological surveys may be performed as determined necessary [e.g., by an RP representative (e.g., RCT)] anytime during the performance of this procedure.*

10.1 WCG Waste Processing Preparation

Waste Handling Technician

[1] **ENSURE** that all applicable prerequisite actions have been completed.

[2] **($) ENSURE** that the battery charger for the cordless drill in the WCG has been unplugged. (SAC 5.10.1.6.1.)

[3] **ENSURE** that the parent drum has been bagged onto the WCG in accordance with Section 7.1, Parent Drum Bag On.

NOTE *The following step may be performed out of sequence.*

[4] **ENSURE** that the daughter drums have been bagged onto the WCG in accordance with Section 8.1, Bag On Daughter Drum, Bagport, or Gloveport, and **RECORD** the following information on Attachment 1:

- Daughter Drum Number
- Daughter Drum Filter Number
- Daughter Drum Bag Filter Number
- Daughter Drum Purchase Order Number

[5] **IF** VE activities are to occur,
THEN ENSURE that CCP-TP-113, Standard Contact Handled Waste Visual Examination, is performed concurrently with this procedure.

[6] **SLOWLY REMOVE** the parent drum lid, being prepared to close the lid if there are unexpected conditions.

[7] **EXAMINE** the contents of the parent drum, and **DETERMINE** whether the contents of the drum have any unexpected items.

10.1 WCG Waste Processing Preparation (continued)

[8] **IF** any unexpected items are present in the parent drum,
THEN:

[A] **CLOSE** the parent drum.

[B] **NOTIFY** supervision and the WCRRF Operations Center of the discrepancy, and **REQUEST** the applicable actions.

[C] **DOCUMENT** the discrepancy and applicable actions in the Comments section of Attachment 1.

NOTE *Placing the parent drum lid over the waste items being surveyed is a simulation of the waste items being inside of a drum and provides a representation of the expected dose rate outside of the drum in order to determine whether the dose rate may exceed 190 mrem/hr and is the desired survey method.*

[9] **ENSURE** that a drum lid is placed over the waste items to be surveyed, as necessary, and **REQUEST** an RCT perform radiological surveys of the items being removed from the parent drum.

NOTE 1 *Unvented, Sealed waste packages are those waste packages that have a positive locking mechanism, such as a gasket with drum closure ring or a screw top lid (with no other openings) to seal the lid to the waste package.*

[10] **IF** the parent drum contains an unvented, sealed waste package,
THEN:

[A] **RECORD** the parent drum container identification number on Attachment 4, WCRRF WCG Breaching (Opening) Unvented, Sealed Waste Packages.

10.1 WCG Waste Processing Preparation (continued)

NOTE *Multiple copies of Attachment 4 may be required for parent drums containing more than four unvented, sealed waste packages that are 5- to 30 gal. Only a single copy of Attachment 4 is necessary for parent drums with multiple unvented, sealed waste packages that are less than 5 gal.*

[B] **CHECK** (√) the applicable box on Attachment 4 to indicate the type of unvented, sealed waste package (e.g., Metal 5- to 30-gal, Non-metallic 5- to 30-gal, or < 5-gal).

NOTE *The cordless drill is considered to be a spark-producing tool and is to be placed aside in the WCG, and <u>not</u> handled, when non-sparking tools are required.*

[C] **($) ENSURE** that non-sparking tools are available for use in the WCG, and **ENSURE** that the availability of the non-sparking tools has been documented on Attachment 4. (SAC 5.10.1.6.1).

NOTE *Administrative Control Lock Log Sheet form 10.4 of EP-DIV-AP-0117* ***SHALL*** *be completed anytime the lock is placed or removed for WCG receptacles lockout.*

[D] **($) ENSURE** that the WCG electrical receptacles have been de-energized and locked open/off with an administrative lock, and **CHECK (√)** SAT or UNSAT on Attachment 4, and **MAKE** an entry on the Administrative Control Log Sheet to document that the WCG electrical receptacles are locked open/off. (SAC 5.10.1.6.2)

10.1 WCG Waste Processing Preparation (continued)

NOTE 1 *A proper ground requires that all ends of the grounding strap be firmly attached to a clean-bare metal surface.*

NOTE 2 *Attachment 5,WCRRF WCG Breaching (Opening) Metal 5- to 30-gal Unvented-Sealed Waste Packages Surveillance, is completed to document the operator and independent verifier installing the grounding devices within TA-50-69.*

NOTE 3 *The following step is to be performed by an operator and then independently verified by a second operator.*

NOTE 4 *Separate copies of Attachment 5 are required for each waste package.*

Waste Handling Technician

[E] **IF** the waste package is a METAL 5- to 30-gal waste package,
THEN:

[a] **RECORD** the parent drum container identification number on Attachment 5.

[b] **($) ENSURE** that the parent drum has been properly grounded to the WCG using a grounding strap in the WCG, and **CHECK** (√) SAT or UNSAT on Attachment 5 to document that the grounding strap was attached. (SR 4.6.1)

Independent Verifier

[c] **VERIFY** that the parent drum has been properly grounded to the WCG using a grounding strap in the WCG, and **CHECK** (√) SAT or UNSAT on Attachment 5.

10.1 WCG Waste Processing Preparation (continued)

Waste Handling Technician

[11] **IF** processing a parent drum containing an unvented, sealed 5- to 30-gal waste package, **THEN:**

WARNING

Unvented, sealed waste packages may contain a concentration of hydrogen gas and are to be handled or identified in this document using grounding devices and lid restraints in order to minimize any possible adverse effects from potentially releasing hydrogen.

NOTE *Drum lid restraints that are not in use are to be stored in such a matter that the drum lid restraints are protected from degradation (e.g., in a daughter drum).*

[A] **($) VISUALLY** inspect the waste package lid restraint for the following, and **DOCUMENT** the results of the inspection on Attachment 4:

- Degradation (e.g., no indication of cracked parts, missing fasteners, loose or frayed parts, excessive wear, or unusual deformation) (SAC 5.10.1.5.1)
- Missing or illegible identification
- Melting or charring
- Broken or worn stitching in load bearing splices
- Knots in any part of the drum lid restraint
- Discoloration and brittle or stiff areas

[B] **($) ATTACH** the waste package lid restraint to the waste package and verify proper installation, and **DOCUMENT** that the lid restraint has been attached on Attachment 4. (SAC 5.10.1.5.1)

NOTE 1 *A proper ground requires that all ends of the grounding strap be firmly attached to a clean-bare metal surface.*

NOTE 2 *Separate copies of Attachment 4 are required for each waste package.*

[C] **($) IF** the waste package is a METAL 5- to 30-gal waste package, **THEN GROUND** the metal waste package using a grounding strap in the WCG, and **CHECK** (√) SAT or UNSAT on Attachment 5 to document that the grounding strap was attached.. (LCO 3.6 and SR 4.6.1)

Independent Verifier

[D] **VERIFY** that the grounding strap is attached and **CHECK** (√) SAT or UNSAT on Attachment 5.

10.1 WCG Waste Processing Preparation (continued)

[E] **RECORD** the following information, Name, Signature, Z Number and Date on Attachment 5.

Waste Handling Technician

[F] **($) IF** the grounding strap was attached to a waste package or parent drum, **AND** the grounding strap becomes detached from either the waste package or the parent drum during the opening of the waste package,
THEN ENTER the Actions of LCO 3.6, and **NOTIFY** the WCRRF Operations Center. (LCO 3.6)

[G] **OPEN** the waste package, and **REMOVE** the lid restraint and waste package lid.

[H] **ENSURE** that the lid restraint and waste package lid are placed out of the way of the open end of the waste package.

[I] **($) RECORD** the time that the lid restraint and waste package lid were removed from the waste package on Attachment 4. (SAC 5.10.1.5.2 and SAC 5.10.1.6.3)

[J] **ENSURE** that all WCG operations have been suspended.

[K] **($) WHEN** 30 min. has elapsed,
THEN DOCUMENT the time and that greater than or equal to 30 min. has elapsed since the lid restraint and waste package lid were removed on Attachment 4. (SAC 5.10.1.5.2 and SAC 5.10.1.6.3)

[L] **RESUME** operations as directed by supervision.

[M] **REMOVE** the grounding straps from the <u>metal</u> waste package, as applicable.

[N] **IF** the waste packaged opened contains a 5- to 30-gal unvented, sealed waste package,
THEN GO to Step 10.1.[11][A].

[O] **IF** the waste package opened contains an unvented, sealed waste package of less than 5 gal,
THEN GO to Step 10.1[12].

[P] **REMOVE** the grounding straps from the parent drum.

10.1 WCG Waste Processing Preparation (continued)

[Q] **IF** directed by supervision,
THEN REMOVE the administrative lock from the WCG electrical receptacles, and **ENERGIZE** the WCG electrical receptacles.

[12] **IF** processing a parent drum containing an unvented, sealed waste packages of less than 5 gal,
THEN:

[A] **OPEN** the waste packages, and **REMOVE** the waste package lids.

NOTE *For situations where multiple waste packages are being opened (e.g., sample vials) the 30-min. wait period before the electrical receptacles may be re-energized starts after the last waste package is opened.*

[B] **($) RECORD** the time that the last unvented, sealed waste package lid was removed from the waste package on Attachment 4. (SAC 5.10.1.6.3)

WARNING

The WCG electrical receptacles is not to be re-energized until 30 min. has elapsed since the unvented waste package was opened in order to prevent the possibility of a flammable gas mixture deflagration.

NOTE *Glovebox operations may continue after opening a less than 5 gal-unvented sealed waste package while waiting the required 30 min. before re-energizing the WCG electrical receptacles.*

[C] **WHEN** 30 min. has elapsed,
THEN:

[a] **($) DOCUMENT** the time and that that greater than or equal to 30 min. has elapsed since the waste package lid was removed on Attachment 4. (SAC 5.10.1.6.3)

10.1 WCG Waste Processing Preparation (continued)

[b] **REMOVE** the grounding straps from the parent drum.

[c] **REMOVE** the administrative lock from the WCG electrical receptacles, and energize the WCG electrical receptacles as directed by supervision.

[13] **IF** sparking is observed at anytime during the processing of waste material, **THEN:**

[A] **PLACE** a fire barrier (e.g., MET-L-X or fire blanket) over the suspect waste material.

[B] **STOP** waste processing.

[C] **ENSURE** that a Fire Watch has been stationed at the WCG to continuously monitor the waste in the WCG, and **CHECK** (√) YES or NO on Attachment 1.

NOTE *The following personnel are notified by the WCRRF Operations Center:*

- *OM or designee*
- *Solid Waste Regulatory Compliance Group*
- *Industrial Hygienist*
- *Cognizant System Engineer*
- *Radiation Protection*

[D] **NOTIFY** the WCRRF Operations Center/Shift Operations Manager of the discrepancy, and **DOCUMENT** the notification and discrepancy in the Comments section of Attachment 1:

[E] **IF** the suspect item is to be bagged out of the WCG, **THEN BAG OUT** the suspect item in accordance with Section 9.1, WCG Item Bag-Out.

[F] **PLACE** the suspect item in an empty daughter drum.

[G] **IF** the daughter drum is attached to the WCG, **THEN BAG OFF** the daughter drum in accordance with Section 8.2, Bag Off Daughter Drum.

[H] **CLOSE** the daughter drum in accordance with EP-WCRR-WO-DOP-0221.

10.1 WCG Waste Processing Preparation (continued)

[14] **IF** a shielded container (e.g., lead lined) is in the parent drum,
THEN:

WARNING

Personnel are to avoid the high radiation exposure area in front of a shielded container that has been accessed in order to prevent increased exposure to radiation due to radiation streaming from the open portion of the shielded container.

[A] **ENSURE** that personnel in Building TA-50-69 are notified that a shielded container is to be accessed and that they are positioned such that when the shielded container is accessed the radiation streaming from the shielded container is directed away from personnel.

[B] **ACCESS** the shielded container contents without removing the contents, and **REQUEST** an RCT to perform a radiological survey to determine the radiation levels.

[C] **IF** the radiation level exceeds an RWP limit,
THEN:

[a] **ENSURE** that the shielding has been replaced, and **CLOSE** the shielded container.

[b] **REQUEST** an RCT perform a radiological survey on the closed shielded container to determine the radiation levels.

[c] **IF** the closed, shielded container radiation level exceeds the RWP limits,
THEN:

1. **ENSURE** that all waste material is in a safe configuration.

2. **STOP** the work activity.

10.1 WCG Waste Processing Preparation (continued)

3. **COMPLY** with the RCT's instructions to minimize radiological exposure.

4. **NOTIFY** the WCRRF Operations Center of the condition, and **REQUEST** the applicable actions.

NOTE *Waste placed into daughter drums must be from a single parent drum except for the collection drum (pressurized container or aerosol can).*

[d] **IF** the waste material is **NOT** to be processed at this time as directed by supervision,
THEN:

1. **PLACE** the waste items from the parent drum into a daughter drum.

2. **BAG OFF** the parent and daughter drums in accordance with the applicable section of this procedure.

3. **IF** a Fire Watch was stationed,
THEN ENSURE that all INVENTORY is in a safe configuration, and **SECURE** the Fire Watch, and **CHECK** (√) YES or NO on Attachment 1.

4. **NOTIFY** the WCRRF Operations Center of the waste disposition.

10.1 WCG Waste Processing Preparation (continued)

NOTE 1 *Continued operation may require the work activity to be paused in order to allow operators and supervision to evaluate the condition to determine the necessary response to the situation (e.g., re-enter area under a different RWP or prepare a POC to accept the waste material).*

NOTE 2 ***($)*** *A STATIONARY FIRE WATCH is required in the OPERATION and WARM STANDBY MODE when the WCG INVENTORY is greater than 300 PE-Ci equivalent combustible waste. (AC 5.2.3)*

[D] **WHEN** the appropriate actions have been determined,
THEN GO to Step 10.1[15].

[15] **IF** any of the following items are identified during the processing of waste:

- Lead-elemental (e.g., circuit boards)
- Mercury-elemental (e.g., thermometers or switches)
- Batteries (e.g., lead/acid, nickel cadmium, or lithium)
- Light bulbs (i.e., incandescent or fluorescent)
- PCB items (e.g., ballasts, capacitors, or transformers)
- Liquids (any amount <u>not</u> remediated or absorbed)

THEN:

[A] **RECORD** the item descriptive information (item type, size, trade name, if available) in the Comments section of Attachment 1.

NOTE *The Waste Management Coordinator (WMC) may be notified at a time that operationally convenient.*

[B] **NOTIFY** the Waste Management Coordinator (WMC) of items found and whether the items were removed, placed into a separate collection container, or placed into a daughter drum.

NOTE 1 *The WMC can assist with assigning the appropriate RCRA Hazardous Waste Codes to the daughter drum.*

NOTE 2 *The following step may be performed when operationally convenient but must be completed the same day as the identification of the item.*

[C] **ENSURE** that the appropriate RCRA Hazardous Waste Codes is assigned to the drum that receives the item (e.g., daughter drum or collection drum).

10.1 WCG Waste Processing Preparation (continued)

WARNING

Glass sample vials may contain residual granular plutonium hydride which can generate sparks when subjected to mechanical agitation. To reduce the possibility of breaking a glass sample vial and the generation of sparks glass sample vials SHALL be without excessive force. (EP-DIV-REPORT-09)

NOTE *Multiple sections may be performed and repeated in order to completely disposition all of the waste from a parent drum.*

[16] **PERFORM** the following applicable sub-section:

- Section 10.2, Waste Material Greater Than 190 mrem/hr
- Section 10.3, Prohibited Item Disposition
- Section 10.4, Waste Splitting Activities
- Section 10.5, Repackaging Activities
- Section 10.6, Processing Nitrate Salt Drums

10.2 Waste Material Greater Than 190 mrem/hr

The following sub-section provides instructions for the disposition of waste material with an expected radiation dose rate of greater than 190 mrem/hr on contact with the outside of a waste container. Simulating that the waste material is inside of a daughter waste container (e.g., measured through drum lid) is the desired method of determining the expected radiation dose rate of waste material outside of a waste container.

NOTE 1 *Appendix 5, Flowchart for Processing of High Dose Items of Mixed Material Types, illustrates the process for POC operations.*

NOTE 2 *Waste containers with Nitrate Salt and a radiation dose rate of greater than 190 mrem/hr are to be processed in accordance with Section 10.6, Processing Nitrate Salt Drums, before performing this section. An attempt to reduce the radiation dose rate to less than or equal to 190 mrem/hr by absorbing the Nitrate Salt with absorbent should be attempted first. Nitrate Salt absorption reduces the quantity of POCs required to process the waste material.*

Waste Handling Technician

[1] **ENSURE** that a POC assembly has been prepared and is available.

10.2 Waste Material Greater Than 190 mrem/hr (continued)

[2] **DETERMINE** whether the serial numbers on the pipe component lid and the pipe component are the same.

[3] **IF** the serial numbers do **NOT** match,
THEN:

[A] **IDENTIFY** (e.g., tag or mark) the POC indicating that the POC is defective.

[B] **SEGREGATE** the POC in order to prevent the item from being used.

NOTE *The NCR may be initiated at a time that is operationally convenient.*

[C] **ENSURE** that an NCR is initiated in accordance with P330-6, Nonconformance Reporting, as required.

[D] **NOTIFY** the WCRRF Operations Center of the discrepancy.

[E] **GO** to Step 10.2[1].

[4] **IF** the POC is to be bagged onto the WCG,
THEN RECORD the following POC bag-on bag information on Attachment 1:
- Manufacturer
- Model Number
- Serial Number
- Date of Manufacture

[5] **PLACE** the POC assembly and shielding near the vicinity of the WCG to provide shielding during bag-off operations <u>or</u> bag-on the POC to the WCG in accordance with Section 8.1, Bag On Daughter Drum, Bagport, or Gloveport; and **RECORD** the POC drum number and POC unique identification number on Attachment 1.

[6] **IDENTIFY** items to be placed into a POC assembly, and **ENSURE** that an item description is recorded on Attachment 1.

10.2 Waste Material Greater Than 190 mrem/hr (continued)

[7] **IF** the item is to be bagged off of the WCG and the item is from a waste container with a mixed material type,
THEN:

[A] **REMOVE** any lead shielding from outside of the item, and **PLACE** the lead in a daughter drum.

[B] **ENSURE** that a description of the item is recorded on Attachment 1.

[C] **BAG OFF** the item in accordance with Section 9.1, WCG Item Bag Out.

[D] **IF** there is no lead shielding inside of the item (container),
THEN PLACE the bagged out item inside a shielded (pewter) container or cover with a lead blanket.

[E] **GO** to Step 10.2[9].

NOTE *Shielded container is only used for the purpose of ALARA and not for final waste packaging.*

[8] **IF** an individual item is to be bagged out of the WCG,
THEN:

[A] **BAG OUT** individual items in accordance with Section 9.1, WCG Item Bag Out.

[B] **PLACE** the bagged out items in shielded (pewter) container or cover with a lead blanket, as required.

NOTE 1 *A POC assembly drum is full when it has reached its weight limit of 547 lb, or is physically full.*

NOTE 2 *Waste placed into daughter drums or Pipe Overpack Containers (POCs) must be from a single parent drum.*

[9] **WHEN** the item is to be placed into a POC,
THEN ENSURE that the item has been removed from the shielded (pewter) container or lead blanket, as necessary.

[10] **PLACE** the items into the POC.

10.2 Waste Material Greater Than 190 mrem/hr (continued)

[11] **IF** the POC assembly is **NOT** full,
AND the parent drum is still being processed,
AND the POC assembly is **NOT** bagged onto the WCG,
THEN:

[A] **ALIGN** the lid holes with the holes in the pipe component body.

[B] **HAND-THREAD** the lid bolts as far as possible.

[C] **REPLACE** the fiberboard packaging, being careful to match the pipe bolt heads, hoist ring, and filter with cutouts in fiberboard.

[D] **REPLACE** the spacers, liner lid, and drum lid.

[E] **IF** there are additional 190 mrem/hr items to be bagged out of the WCG, **THEN GO** to Step 10.2[7].

[12] **IF** the POC is bagged onto the WCG,
THEN bag-off the POC in accordance with Section 8.2, Bag Off Daughter Drum

[13] **CLOSE** the POC assembly in accordance with the manufacturer's instructions and **DOCUMENT** (initials and Z number) that the POC assembly has been closed in accordance with the manufacturer's instructions on Attachment 1.

[14] **WEIGH** the POC assembly, and **RECORD** the POC Assembly Gross Weight on Attachment 1.

[15] **REQUEST** an RCT perform a radiation survey of the POC, and **RECORD** the POC radiation survey results on Attachment 1.

[16] **IF** the following requirements are **NOT** satisfied:
- External surface radiation dose rates less than 200 mrem/hr (DOE/WIPP-02-3122)
- Gross weight less than 547 lb for a 12 in. POC (CH-TRAMPAC)

THEN NOTIFY the WCRRF Operations Center of the discrepancy, and **REQUEST** the applicable actions.

[17] **LABEL** the POC assembly drum in accordance with EP-DIV-DOP-20043, LTP TRU Waste Container Labeling.

10.2 Waste Material Greater Than 190 mrem/hr (continued)

[18] **IF** all of the waste in the parent drum has **NOT** been dispositioned,
THEN GO to the appropriate sub-section to complete processing the remaining waste.

[19] **GO** to Section 11.1, Disposition.

10.3 Prohibited Item Disposition

The following sub-section provides instructions for the disposition of waste material that is considered to be prohibited items at WIPP.

NOTE 1 *The following activities associated with sorting parent drum waste such as the disposition of liquids, pressurized containers, and PCB-contaminated waste may be performed simultaneously or in any order.*

NOTE 2 *The Hold Tag for CCP NCRs is removed from the parent drum and returned to CCP personnel.*

NOTE 3 *A completed PID package includes the following documents:*

- *Attachment 1, WCRRF WCG Waste Processing Data Sheet*
- *Attachment 6, WCRRF Prohibited Item Collection Drum Data Sheet*
- *EP-WCRR-WO-DOP-0221 Attachment 1, Checklist for the Preparation of a New 55-Gallon Drum Assembly*
- *EP-WCRR-WO-DOP-0221 Attachment 2, Checklist for the Closing of a 55-Gallon Drum Assembly*
- *WDP Waste Remediation Safety Evaluation Data Sheet (EP-DIV-AP-0107 Attachment 1)*

Waste Handling Technician

[1] **LOCATE** any contained, uncontained, or free liquids.

NOTE 1 *Waste containers with liquids (any amount or configuration) that have <u>not</u> been solidified (absorbed) must be managed on secondary containment pallets and have a FREE LIQUID label affixed.*

NOTE 2 *By absorbing all liquids the resulting daughter drum is <u>not</u> required to be stored on a secondary containment pallet.*

[2] **IF** liquid is identified inside of transparent or opaque containers that is <u>less than or equal to</u> 60 ml in the containers,
AND the liquid is **NOT** to be absorbed,
THEN PLACE the containers with liquids into the daughter drum.

10.3 Prohibited Item Disposition (continued)

[3] **IF** liquid is identified inside of a transparent or opaque containers (e.g., contents adequately labeled),
THEN:

[A] **RECORD** the approximate liquid volume on Attachment 1.

[B] **OPEN** the containers.

[C] **PERFORM** a pH test of the liquid using Litmus Paper.
- Acid (less than 7)
- Caustic (base – greater than 7)

[E] **NEUTRALIZE** the liquid, as necessary.

[F] **OBTAIN** the appropriate absorbing agent, and **PLACE** the absorbent into a compatible container (e.g., bottle or bag) that has a volume of less than 4 Liters.

NOTE *Multiple containers of less than 4 liters may be required in order to absorb all of the free liquid.*

[G] **TRANSFER** the liquid into the compatible container (e.g., bottle or bag), and **PLACE** the container (e.g., bottle or bag) inside of the daughter drum.

NOTE *Waste containers with liquids (any amount or configuration) that have <u>not</u> been solidified (absorbed) must be managed on secondary containment pallets and have a FREE LIQUID label affixed.*

[4] **IF** liquid is identified in transparent containers or in opaque containers that **CANNOT** be safely opened (e.g., contents adequately labeled),
THEN:

[A] **PLACE** the containers into the daughter drum.

10.3 Prohibited Item Disposition (continued)

[B] **NOTIFY** the WCRRF Operations Center of the discrepancy, and **DOCUMENT** in the Comments section of Attachment 1.

NOTE *Liquids are not to be combined or bulked.*

[5] **IF** any free liquid is identified,
THEN:

[A] **DETERMINE** the approximate volume of liquid, and **DOCUMENT** the approximate amount of liquid on Attachment 1.

[B] **PERFORM** a pH test on the liquid using Litmus Paper.

[C] **NEUTRALIZE** the liquid, as necessary.

[D] **OBTAIN** the appropriate absorbing agent, and **PLACE** the absorbent in a compatible container (e.g., bottle or bag) that has a volume of less than 4 Liters.

[E] **ADD** a small amount of the free liquid to the container (e.g., bottle or bag).

[F] **IF** any reaction occurs between the absorbent and the free liquid,
THEN:

[a] **STOP** the addition work activities.

[b] **NOTIFY** the WCRRF Operations Center of the condition, and **REQUEST** the applicable actions.

[c] **DOCUMENT** the notifications and actions in the Comments section of Attachment 1.

10.3 Prohibited Item Disposition (continued)

NOTE *Multiple containers (e.g., bottle or bag) of less than 4 liters may be required in order to absorb all of the free liquid.*

[G] **IF** processing Nitrate Salts with free liquids,
THEN GO to Sub-section 10.6, Processing Nitrate Salt Drums.

[H] **MIX** the absorbent with the waste.

[I] **ENSURE** absorbent is thoroughly mixed with the liquid.

NOTE *Absorbing waste containers that are categorized as Nitrate Salts will generate additional daughter drums due to the amount of absorbent required to solidify the waste.*

[J] **PLACE** the containers (e.g., bottle or bag) inside of the daughter drum.

[K] **REPEAT** Step 10.3[5] until all liquids have been absorbed.

NOTE *Appendix 4, Volumes of Cylindrical Inner Containers Near 4 Liters, can be used to help determine whether a container is greater than 4 liters.*

[6] **LOCATE** sealed, unpressurized containers greater than 4 liters (that do not contain any liquid), and **DISPOSITION** the container as follows:

[A] **REMOVE** the tape, lid, cap, stopper, or other appropriate method.

[B] **PLACE** the dispositioned items into the daughter drum.

[7] **LOCATE** opaque or non-penetrable item (that do not contain any liquid), and **DISPOSITION** the container as follows:

10.3 Prohibited Item Disposition (continued)

[A] **DESCRIBE** in detail (e.g., size, shape, labeling, weight, material) the opaque or non-penetrable items on Attachment 1.

[B] **PLACE** the dispositioned items into the daughter drum.

[8] **LOCATE** potentially pressurized containers, and **DISPOSITION** the container as follows:

[A] **IF** there is evidence that a potentially pressurized container has been previously punctured and is empty,
THEN:

[a] **PLACE** a metal rod or equivalent (item found in the waste) inside the container and **SECURE** with tape, or **ENLARGE** the hole to be visible by Radiography.

[b] **PLACE** the container inside the daughter drum.

[B] **IF** a potentially pressurized container is **NOT** punctured,
THEN:

[a] **DECONTAMINATE** (wipe down) the potentially pressurized container.

[b] **BAG OUT** the potentially pressurized container in accordance with Section 9.1, WCG Item Bag Out.

[c] **PLACE** an Item Identification (ID) Number on the potentially pressurized container or bagout bag.

NOTE 1 *A collection drum for pressurized containers and aerosol cans will be established and placed inside one of the WCRRF Transportainers (TSDF).*

NOTE 2 *Pressurized cylinders and aerosol cans must be collected in separate drums (e.g., on collection drum for pressurized cylinders and one collection drum for aerosol cans. All other prohibited items that cannot be remediated must be collected in a separate (third) collection drum.*

[d] **PLACE** the potential pressurized container in a designated collection drum.

10.3 Prohibited Item Disposition (continued)

[e] **ENSURE** that the following information is recorded on Attachment 6 for each item:

- Collection drum number
- Collection drum type (pressurized container, aerosol, or other)
- Date collection drum waste created
- Date item is added to the collection drum
- Item Identification Number
- Parent Container Number
- Parent Accumulation Start Date
- Parent EPA Codes
- Item Description
- Item Shape
- Item Size
- Item Labeling
- Item Weight (lb)
- Initials and Z number

NOTE *The hazardous waste label may need to be replaced in order to ensure that all information is added and legible.*

[f] **ENSURE** that the accumulation start date on the collection drum reflects the earliest parent drum accumulation start date recorded on Attachment 6.

[g] **ENSURE** that all EPA Codes from the associated parent drums are documented on the collection drum hazardous waste label.

[9] **IF** any polychlorinated biphenyls (PCB)-contaminated waste is identified, **THEN:**

[A] **DESCRIBE** in detail (e.g., size, shape, labeling, weight, material) the PCB-contaminated waste on Attachment 1.

NOTE *The following step may be performed when operationally convenient.*

[B] **ATTACH** a PCB Item ID Number to the drum receiving the PCB waste (above the top rolling hoop and cover with clear tape), and **RECORD** the PCB Item ID Number on Attachment 1.

10.3 Prohibited Item Disposition (continued)

[C] **PLACE** the PCB-contaminated waste into a daughter drum.

[10] **DOCUMENT** a description of the type of remaining waste added to each daughter drum during the processing of waste from a parent drum on Attachment 1.

[11] **REPEAT** Steps 10.3[2] though 10.3[10] as necessary to completely resolve any PIDs within the parent drum.

[12] **IF** all of the waste in the parent drum has **NOT** been dispositioned,
THEN GO to the appropriate sub-section to complete processing the remaining waste.

NOTE *The following step may be performed out of sequence.*

[13] **DETERMINE** the level of waste placed into the daughter drum, and **RECORD** the Daughter Drum % Full value (%) on Attachment 1.

[14] **BAG OFF** waste containers in accordance with Section 7.2, Parent Drum Bag Off; and Section 8.2, Bag Off Daughter Drum.

[15] **GO** to Section 11.1, Disposition.

10.4 <u>Waste Splitting Activities</u>

The following steps provide instructions for the disposition of waste material with a PE-Ci value that requires the waste material to be divided into multiple daughter drums.

This sub-section is performed following the assaying of the parent drum and the determination of the number of daughter drums to be generated from the parent drum.

Waste Handling Technician

[1] **CAREFULLY REMOVE** a portion of the parent drum's contents (waste items).

[2] **NOTIFY** the Assay Personnel of the estimated weight of the items, as requested.

[3] **PLACE** the waste items into the WCG metal bucket.

[4] **LOWER** the metal bucket into the <u>east</u> daughter drum (closet to airlock).

10.4 Waste Splitting Activities (continued)

Assay Personnel

[5] **PERFORM** a radiological assay of the material in the east daughter drum in accordance with an approved procedure.

Waste Handling Technician

[6] **IF** the assay is higher than desired,
THEN:

[A] **LIFT** the metal bucket out of the east daughter drum.

[B] **REMOVE** some of the metal bucket contents.

[C] **GO** to Step 10.4[4].

[7] **LIFT** the metal bucket out of the east daughter drum.

NOTE *Waste placed into daughter drums or Pipe Overpack Containers (POCs) must be from a single parent drum.*

[8] **PLACE** the waste material into the west daughter drum (farthest from airlock)

[9] **REPEAT** Steps 10.4[1] through 10.4[8] until the desired radiological assay value is reached in the west daughter drum (farthest from airlock).

NOTE *The following step may be performed out of sequence.*

[10] **DETERMINE** the level of waste placed into the daughter drums, and **RECORD** the Daughter Drum % Full value (%) on Attachment 1.

[11] **BAG OFF** the west daughter drum (farthest from airlock) in accordance with Section 8.2, Bag Off Daughter Drum.

NOTE *Steps 10.4[12] and 10.4[13] may be performed in any order or concurrently.*

[12] **BAG ON** a new-west daughter drum (farthest from airlock) in accordance with Section 8.1, Bag On Daughter Drum, Bagport, or Gloveport.

10.4 Waste Splitting Activities (continued)

[13] **REPEAT** Steps 10.4[1] through 10.4[12] until all material within the parent drum has been processed.

[14] **WHEN** assaying of waste at the WCG is complete,
THEN ENSURE that the assaying equipment is removed from the WCG Exclusion Zone.

[15] **IF** all of the waste in the parent drum has **NOT** been dispositioned,
THEN GO to the appropriate sub-section to complete processing the remaining waste.

[16] **GO** to Section 11.1, Disposition.

10.5 Repackaging Activities

Waste Operator

[1] **REMOVE** waste items from the parent drum.

NOTE *Waste placed into daughter drums or Pipe Overpack Containers (POCs) must be from a single parent drum.*

[2] **PLACE** the waste items into a daughter drum.

[3] **DOCUMENT** any waste added during the processing of waste from a parent drum on Attachment 1.

NOTE *The following step may be performed out of sequence.*

[4] **DETERMINE** the level of waste placed into the daughter drums, and **RECORD** the Daughter Drum % Full value (%) on Attachment 1.

[5] **BAG OFF** the parent and daughter drums from the WCG in accordance with Section 7.2, Parent Drum Bag Off; and Section 8.2, Bag Off Daughter Drum.

[6] **IF** all the waste in the parent drum has **NOT** been dispositioned,
THEN GO to the appropriate sub-section in this procedure to complete processing of the remaining waste.

[7] **GO** to Section 11.1, Disposition.

10.6 Processing Nitrate Salt Drums

The following sub-section provides instructions for the disposition of Nitrate Salt drums that require the waste material to be mixed with absorbent material. Unless otherwise directed by supervision the minimum ratio of absorbent to Nitrate Salt is 3-parts absorbent to 1-part Nitrate Salt.

[1] **REMOVE** the waste items from the parent drum.

[2] **DOCUMENT** any waste items from the parent drum added to the daughter drum during the waste processing on Attachment 1.

[3] **ENSURE** that an organic absorbent (Kitty Litter/Zeolite® absorbent) is added to the waste material at a minimum ratio of 3-parts absorbent to 1-part waste or at a ratio as directed by supervision.

[4] **ENSURE** absorbent (Kitty Litter/Zeolite® absorbent) is thoroughly mixed with the Nitrate Salt material.

[5] **IF** the measured radiation level of the absorbent/Nitrate Salt mixture is greater than 190 mrem/hr,
AND multiple attempts to reduce the radiation level by splitting the absorbent/Nitrate Salt mixture have been attempted or directed by supervision,
THEN GO to Section 10.2, Waste Material Greater Than 190 mrem/hr.

[6] **IF** the measured radiation level of the absorbent/Nitrate Salt mixture is greater than 190 mrem/hr,
THEN:

[A] **SPLIT** the absorbent/Nitrate Salt mixture.

[B] **REPEAT** Steps 10.6[3] through 10.6[5] for each portion of the absorbent/Nitrate Salt mixture.

[7] **PLACE** process waste into daughter drum.

[8] **REPEAT** Steps 10.6[1] through 10.6[7] for all Nitrate Salt processing.

[9] **REMEDIATE** the contents of the parent drum for other items as applicable.

10.6 Processing Nitrate Salt Drums (continued)

NOTE *Absorbent waste containers that are categorized, as Nitrate Salts will generate additional daughter drums due to the amount of absorbent required to solidify the waste.*

[10] **DETERMINE** the level of waste placed into the daughter drums, and **RECORD** the Daughter Drum % Full value (%) on Attachment 1.

[11] **BAG OFF** the parent and daughter drums from the WCG in accordance with Section 7.2, Parent Drum Bag Off; and Section 8.2, Bag Off Daughter Drum.

[12] **CLOSE** the daughter drum in accordance with EP-WCRR-WO-DOP-0221, Preparing and Closing 55-Gallon Daughter Drum Assemblies.

11. POST-PERFORMANCE ACTIVITY

11.1 Disposition

Waste Handling Technician

[1] **SIGN** and **DATE** the applicable attachments.

Cognizant System Engineer

[2] **IF** UNSAT was checked on Attachment 5,
THEN:

[A] **PERFORM** an Immediate Operability Determination (IOD) in conjunction with the SOM in accordance with AP-341-516, Operability Determination and Functionality Assessment.

[B] **IF** the IOD is that the Structure, System, and Component (SSC) is operable, **AND** information is available that could change the outcome of the IOD, **THEN PERFORM** an Prompt Operability Determination for the deficiency in accordance with AP-341-516.

[C] **NOTIFY** the applicable Operations Center and SOM of the operability determination, as applicable.

[D] **PRINT, SIGN, Z number** and **DATE** Attachment 5.

SOS or designee

[3] **IF** a Fire Watch was stationed,
THEN ENSURE all INVENTORY is in a safe configuration, and **SECURE** the Fire Watch, and **CHECK** (√) YES or NO on Attachment 1.

[4] **REVIEW** the applicable attachments for accuracy and completeness.

[5] **IF** any discrepancies are identified,
THEN RESOLVE the discrepancies with the original surveillant to correct the documentation.

11.1 Disposition (continued)

[6] **IF** Attachment 5 was completed,
THEN:

[A] **CHECK** (√) YES or NO to indicate whether the applicable acceptance criteria is satisfied on Attachment 5.

[B] **IF** the applicable acceptance criteria is **NOT** satisfied,
THEN:

[a] **ENSURE** that the applicable TSR actions have been implemented.

[b] **ENSURE** that the actions of EP-DIV-AP-13, EWMO TSR-Related Operational Limits Actions Compliance Tracking, have been implemented.

[c] **ENSURE** that the WCRRF Operations Center, SOM and EWMO Facility Operations Director (FOD) have been notified of the discrepancy.

[7] **PRINT, SIGN,** and **RECORD** Z#, Date/Time on the applicable attachments.

[8] **FORWARD** the applicable attachments to the WCRRF Operations Center.

[9] **ENSURE** that the Administrative Control Lock Log Sheet form, lock and key are returned to WCRRF Operation Center.

[10] **IF** a prohibited item collection drum was brought into TA-50-69,
AND waste processing is complete,
THEN ENSURE that the prohibited item collection drum is moved out of TA-50-69.

NOTE *Completing a Post-Job Review may be accomplished using the applicable P300 form or online (the preferred method since the institution has access to feedback and lessons learned http://int.lanl.gov/safety/iwmc/ [Click on the Submit IWD Part 4, Post-Job Review]).*

[11] **IF** any of the following occur:

- A new activity was completed for the first time
- A request was made by anyone involved with the performance of this procedure to perform a post-job review
- An abnormal event occurred
- A revision to an existing procedure was issued and it has been determined by the procedure owner or designee that a Post-Job Review is required

THEN PERFORM a Post-Job Review in accordance with P300.

11.1 Disposition (continued)

[12] **IF** the Post-Job Review identified any necessary changes to this procedure, **THEN INITIATE** a revision to this procedure.

11.2 Records Processing

Waste Handling Technician or Supervision

[1] Disposition records in accordance with the following:

Record Identification	Record Type Determination	Protection/Storage Method	Processing Instructions
Attachment 1, WCRRF WCG Waste Processing Data Sheet Attachment 2, WCRRF WCG Critical Lift Plan Concurrence Sheet Attachment 3, WCRRF WCG Drum Lift Inspection Data Sheet Attachment 4, WCRRF WCG Breaching (Opening) Unvented, Sealed Waste Packages Checklist Attachment 5, WCRRF WCG Breaching (Opening) Metal 5- to 30 gal Unvented, Sealed Waste Package Surveillance Attachment 6, WCRRF Prohibited Item Collection Drum Data Sheet	Quality Assurance (QA) Record	Supervision **SHALL** implement a reasonable level of protection to prevent loss and degradation. Records should be maintained in a one-hour fire rated metal file cabinet when not in use. The instructions in this section may vary depending on the record such as some records may be retained in an Operations Center for a period of time (e.g., 1 year) in order to provide trending data or evidence of compliance.	When the records are ready for final disposition, the record is transferred to Records Management in accordance with EP-DIR-AP-10003, Records Management Procedure For ADEP Employees.

12. REFERENCES

ABD-WFM-006, Technical Safety Requirements (TSRs) for Waste Characterization, Reduction, and Repackaging Facility (WCRRF)

AP-341-516, Operability Determination and Functionality Assessment

CCP-TP-113, CCP Standard Waste Visual Examination

CH-TRAMPAC, Contact Handled – Transuranic Waste Authorized Methods for Payload Control

DOE/WIPP-02-3122, Transuranic Waste Acceptance Criteria For Waste Isolation Pilot Plant

EP-DIV-AP-0112, WDP Pre-Job Briefings

EP-DIV-AP-13, EWMO TSR-Related Operational Limits Actions Compliance Tracking

EP-DIV-AP-20047, LTP Glovebox/Glovebag and Glove Safety Program

EP-DIV-AP-0107, WDP TRU Waste Container Management Operations

EP-DIV-AP-0108, LTP Waste Record (TWSR/WDR) Initiation and Label Creation

EP-DIV-AP-0117, WDP Division Forms

EP-DIV-AP-0120, EWMO Watchbill Administration

EP-DIV-Policy-20057, EWMO Health and Safety Policy-Manual Movement

EP-DIV-REPORT-09, Engineering Path Forward Report for CMR Wing 2 Containers

EP-DIR-AP-10003, Records Management Procedure For ADEP Employees

EP-WCRR-FO-DOP-0201, WCRRF and Building TA-50-69 TSR Mode Change

EP-WCRR-RM-AOP-0208, Special Shapes

EP-WCRR-WO-DOP-0221, Preparing and Closing 55-gal Daughter Drum Assemblies

EP-WCRR-WO-DOP-0236, WCRRF Loading/Unloading SWB or 85-gal Drum

12. REFERENCES (continued)

EP-WCRR-WO-DOP-0239, Verifying WCRRF Scales

EWMO-DO-07-042, Memo. Dtd. Jul 6 ,2007, WCRRF Pu-238 Glovebag Issue

Form 1489, Pre-Operational Inspection Record for Overhead Cranes and Hoists

P101-18, Procedure for Pause/Stop Work

P101-25, Cranes, Hoists, Lifting Devices, and Rigging Equipment

P121, Radiation Protection

P330-6, Nonconformance Reporting

APPENDIX 1
Page 1 of 3

WASTE DRUM CRITICAL LIFT PLAN

Purpose

This critical lift plan is used for loading degraded or loss of integrity drums or drums that satisfy the critical lift requirements of P101-25 with the WCG Drum Lift as required by ABD-WFM-006, Technical Safety Requirements (TSRs) for Waste Characterization, Reduction, and Repackaging Facility (WCRRF). This critical lift plan must be used to lower degraded drums with waste material using the WCG Drum Lift. This plan will be used to handle and prepare waste drums at Area-G and at WCRRF for a critical lift.

General Guidelines/Notes

This critical lift plan has been prepared in accordance with P101-25, Cranes, Hoists, Lifting Devices, and Rigging Equipment.
Drum handling operations involving degraded/loss of integrity drums or drums that satisfy the requirements for a critical lift in accordance with P101-25 (e.g., drums weighing greater than 468 lb) at WCRRF are performed using approved procedures and lifting equipment specifically designed for this operation.
The following information **SHALL** be reviewed during the critical lift pre-job brief:

1. All lifting and signaling **SHALL** be performed by a qualified operator. Supervision will be by a designated Qualified Crane Operator and Rigger Person-In-Charge (PIC) and documented on the WCRRF WCG Critical Lift Plan Concurrence Sheet.

2. The WCG Drum Lift and drums **SHALL** be visually inspected by the operator and/or qualified PIC. Any noted substandard item **SHALL** be cause for suspending operations until an acceptable replacement is acquired.

3. The rigging procedure **SHALL** be followed. Where changes are required due to site conditions, the changes **SHALL** be reviewed and approved by the Qualified Crane Operator and Rigger PIC.

4. The weight of the load **SHALL** include the 55 gal drum and lead blankets (if used for shielding purposes). In no case should the lift exceed 624 lb.

5. Communications between the WCG pendant operator and PIC **SHALL** be clear and unobstructed. The primary system **SHALL** be voice communications. Only designated, qualified signalers **SHALL** give signals to the operator. However, the operator **SHALL** obey a stop signal at all times, no matter who gives the signal.

6. <u>A pre-lift meeting with all responsible persons **SHALL** be held before the lifts and each person **SHALL** be assigned specific duties and sign the pre-job sheet.</u>

7. The equipment to be used for this lift will be as applicable: WCG Drum Lift.

APPENDIX 1
Page 2 of 3

Project Notes and Specifications

1. The primary goal is to perform a safe lift in a timely manner.
2. This lift has been frequently performed with equipment stated in this plan. A preliminary lift is not required but if any discrepancies are noted during the lift, the project **SHALL** be stopped and re-evaluated by the Qualified Operator, and Qualified Crane Operator and Rigger PIC.
3. The drum **SHALL** be positioned secured in the WCG Drum Lift to facilitate SAFE and efficient operation. The drum lift pendant operator **SHALL** announce operation of the lift before commencing raising/lowering of the drum and all personnel **SHALL** stand clear and to the side of drum movement. The work area for assembling the payload **SHALL** be limited to personnel necessary for the operation. (Example: Operator, signal personnel, PIC, and RCTs.)
4. The lift requires understanding by the entire crew. This lift plan **SHALL** be thoroughly reviewed by the personnel performing the lift and the Critical Lift / Pre-Lift Meeting **SHALL** be conducted before the lift to ensure that all personnel are aware of their assigned duties. Each person involved in the lift must attend the meeting and sign the attendance sheet.

Competent Person / Lift Supervisor

The responsible person for this lift is the designated Qualified Crane Operator and Rigger PIC.

Emergency Action Plan

1. In the event that an emergency occurs, all operations **SHALL** be discontinued and any raised load **SHALL** be lowered/secured, if possible. For specific casualties, operators will also perform required actions of applicable procedures in the WCRRF Response Manual.
2. Each portion of the lift presents a slightly different set of variables as related to a direction and area where the components may be set down temporarily during an emergency.
3. During the pre-lift meeting the operators, riggers, and spotter are to specifically discuss emergency actions at various points during the lift. If the raised load has to be secured the operator will do so and contact the RCT and Qualified Crane Operator and Rigger PIC. All non-essential personnel are to be kept clear of the lift area.
4. The operator and rigging personnel will not resume the lift operations without approval from the RCT and the Qualified Crane Operator and Rigger PIC.
5. In the event of an equipment malfunction and the drum cannot be lowered/secured:
   - The operation will be placed in a safe configuration.
   - The waste will be unloaded from the drum and the drum will be manually removed from the drum lift, if possible, or the CSE will be notified for the applicable actions.

Hazard Assessment

This lift has been reviewed in great detail to ensure a safe lift and minimize hazards. The following items have been identified as unique for this lift.

In no case **SHALL** material being lifted weigh more than 624 lb. (drum + lead shielding).

APPENDIX 1
Page 3 of 3

Test Lift—A test lift is not required for this operation.
Travel Path—At the pre-job/lift briefing a spotter(s) **SHALL** be designated to observe the load along the entire travel path (consider slopes and uneven surfaces).

Overhead Instructions—The Qualified Crane Operator and Rigger PIC and rigging crew **SHALL** physically verify the travel path is clear of overhead obstructions before beginning the lift.

Working Around the Load (Cone of Safety) - Absolutely NO ONE **SHALL** be under the load, or while it is being raised, lowered, or moved. The Qualified Crane Operator and Rigger PIC **SHALL** ensure that the area (in front of the WCG Drum Lift) is clear of non-essential personnel. Specific placement of operators and RCTs **SHALL** be established during the pre-lift meeting.

Securing the Drum Lifting Assembly—The rigging crew s **SHALL** inspect the WCG Drum Lift before lifting a drum.

Equipment List

Ensure the following equipment is present, has undergone physical inspection, is properly calibrated and is ready to support the critical lift steps:

- WCG Drum Lift

Work Steps for Loading a 55 Gallon Drum Using the WCG Drum Lift

Step 1 Verify the drums weighs less than 624 lb.

Step 2 Obtain key from key box, Insert key, and turn on the power to the drum lift.

Step 3 Using the drum lift pendent, lower the drum lift to the lower limit switch or until the bellyband of the lift cradle can grasp the drum evenly.

Step 4 Position the drum on the drum lift with the drum bolt ring accessible for lid removal when inside the glovebox.

Step 5 Close and secure the bellyband, ensuring the bag-off sleeve does not get caught on the bellyband.

Step 6 Raise the drum to the horizontal port and stop, leaving an adequate gap (approximately 12 inches) to mount the bag-off sleeve to the horizontal port.

Step 7 Bag on the parent drum in accordance with this procedure.

Step 8 Turn off the power to the drum lift, remove key, and place in key box.

APPENDIX 2
Page 1 of 1

WCRRF ALLOWED CONTAINER TYPES FOR REMEDIATION

The following "allowed" container types may be remediated in the WCRRF glovebox because there is no concern for hydrogen buildup within the container:

- Containers without a gasket (e.g. containers with slip lids, paint cans, "produce cans" and other similar containers) of any size
- Containers of any size with slip-on lids (with or without a gasket)
- Empty containers of any size
- Fiber board containers of any size
- Sealed containers of any size not containing TRU waste or free liquids
- Any containers with a volume < (less than) 4 liters
- Unvented 5- to 30-gal waste packages

APPENDIX 3
Page 1 of 1

EXAMPLE PREOPERATIONAL INSPECTION RECORD FOR OVERHEAD CRANES AND HOISTS

NOTE: Use these buttons to print or save the form, DO NOT use the browser tool bar. SAVE PRINT

Form 1489

Los Alamos NATIONAL LABORATORY EST. 1943

Preoperational Inspection Record for Overhead Cranes and Hoists

Inspector	Date Inspected	Location
Manufacturer and Type		Serial Number and Rated Capacity

Current Inspections			
• Current Annual ANSI/OSHA Inspection	Date:		
• Current Annual Mechanical and Electrical (*if applicable*) PM's	Date:		
• Current Monthly Inspection	Date:		
Main or Auxiliary Hoist Rope			
• Is there any distortion such as kinking, crushing, unstranding, bird-caging, heat damage, or core protrusion?	☐ Yes	☐ No	☐ N/A
• Are there six randomly distorted broken wires per rope lay or three broken wires per strand per rope lay?	☐ Yes	☐ No	☐ N/A
• Is there wear of 1/3 the original diameter of outside individual wires?	☐ Yes	☐ No	☐ N/A
Load Chain			
• Is there elongation or distortion?	☐ Yes	☐ No	☒ N/A
• Any twisting, corrosion, pitting, or discoloration?	☐ Yes	☐ No	☒ N/A
• Any gouges, nicks, or weld splatter?	☐ Yes	☐ No	☒ N/A
Spooling, Reeving			
• Is there cross-winding?	☐ Yes	☐ No	☐ N/A
• Are the rope stays together and in alignment?	☐ Yes	☐ No	☐ N/A
• Is there any double winding or overwinding?	☐ Yes	☐ No	☐ N/A
• Is there minimum of two wraps at lowest position?	☐ Yes	☐ No	☐ N/A
Anchoring			
• Anchoring secured or installed in accordance with manufacturer's recommendations?	☐ Yes	☐ No	☐ N/A
• Is there minimum of two wire rope clips?	☐ Yes	☐ No	☒ N/A
Main or Auxiliary Hook			
• Is the throat opening not greater than 15% of normal?	☐ Yes	☐ No	☒ N/A
• Is there less than ten-degree twist out of plane?	☐ Yes	☐ No	☒ N/A
• Any deformities or cracks?	☐ Yes	☐ No	☒ N/A
• Are the safety latches present and functional?	☐ Yes	☐ No	☒ N/A
Markings			
• Are the rated capacities conspicuously posted?	☐ Yes	☐ No	☐ N/A
• Are the controllers properly marked? Are remote crane controllers affixed a label which contains the following information? (crane manufacturer, location, and other information specific to the unit being operated)	☐ Yes	☐ No	☐ N/A
• Is the main disconnect properly marked?	☐ Yes	☐ No	☐ N/A
Are the items listed functional?			
• Brakes	☐ Yes	☐ No	☐ N/A
• Controllers	☐ Yes	☐ No	☐ N/A
• Limit switches	☐ Yes	☐ No	☐ N/A
• Lights, warning devices	☐ Yes	☐ No	☒ N/A
• Trolley	☐ Yes	☐ No	☐ N/A
• Bridge	☐ Yes	☐ No	☒ N/A
• Main or auxiliary load	☐ Yes	☐ No	☐ N/A
Remarks:			

Form 1489 (12/10)

EXAMPLE

APPENDIX 4
Page 1 of 1

VOLUMES OF CYLINDRICAL INNER CONTAINERS NEAR 4 LITERS

Diameter		Height		Volume (liters)
3”	7.6 cm	12”	30.5 cm	< 4
3”	7.6 cm	18”	45.7 cm	< 4
4”	10.7 cm	12”	30.5 cm	< 4
4”	10.7 cm	18”	45.7 cm	> 4
4.5”	11.4 cm	12”	30.5 cm	< 4
4.5”	11.4 cm	14”	35.6 cm	< 4
4.5”	11.4 cm	16”	40.6 cm	> 4
4.5”	11.4 cm	18”	45.7 cm	> 4
5”	12.7 cm	8”	20.3 cm	< 4
5”	12.7 cm	10”	24.5 cm	< 4
5”	12.7 cm	12”	30.5 cm	> 4
5”	12.7 cm	14”	35.6 cm	> 4
5.5”	14 cm	8”	20.3 cm	< 4
5.5”	14 cm	10”	24.5 cm	> 4
5.5”	14 cm	12”	30.5 cm	> 4
6”	15.2 cm	8”	20.3 cm	> 4
6”	15.2 cm	10”	24.5 cm	> 4
6.5”	16.5 cm	8”	20.3 cm	> 4
7”	17.8 cm	6.5”	16.5 cm	> 4

<4 = less than 4 liters and does <u>not</u> require remediation

> 4 = greater than 4 liters and requires remediation

APPENDIX 5
Page 1 of 1

FLOWCHART FOR PROCESSING OF HIGH DOSE ITEMS OF MIXED MATERIAL TYPES

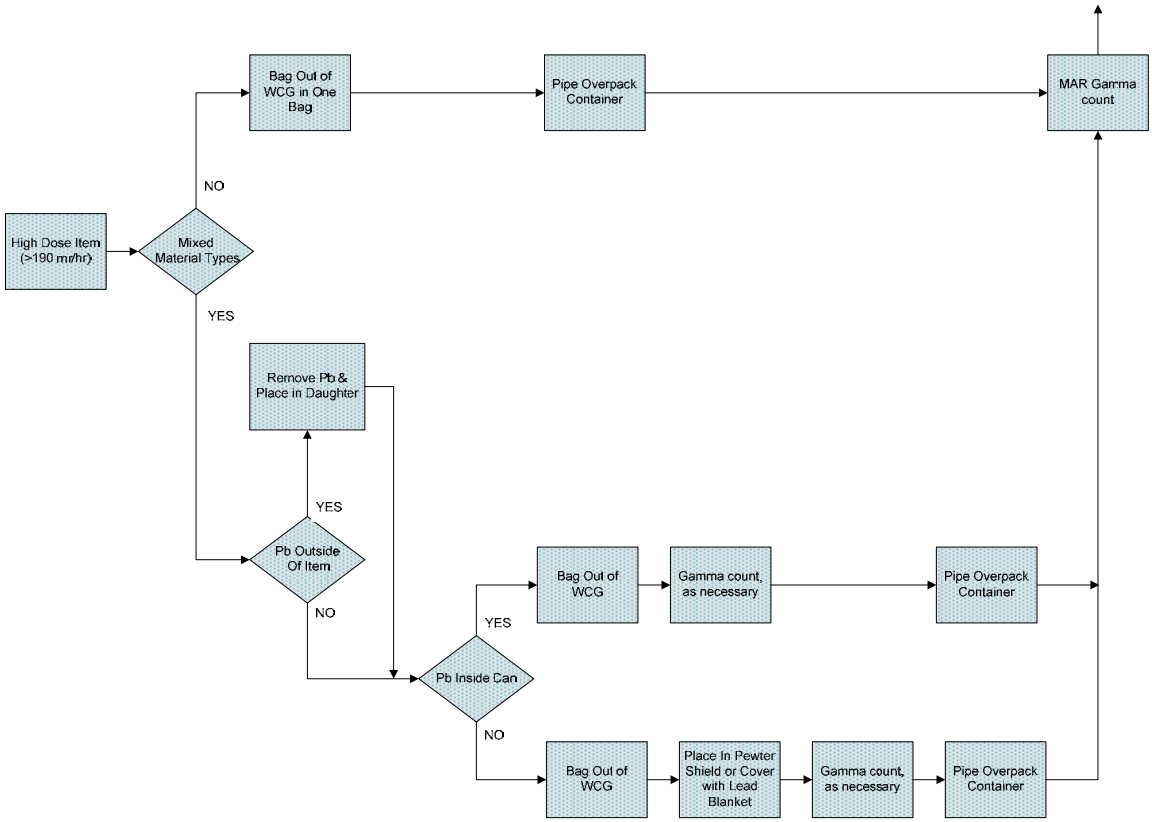

APPENDIX 6
Page 1 of 1

ADMINISTRATIVE CONTROL LOCK LOG SHEET

(Used when needed to track component manipulation)

NOTE: Refer to P315, Conduct of Operations Manual, Attachment 8, Section 8.1.5, for additional guidance.

Facility/Location: _____

Component No.	Authorized By (Shift Mgr.)	New Position	Positioned By	Verified By	Date/ Time	Restored By	Verified By	Date/ Time	Authorized By (Shift Mgr.)

ATTACHMENT 1
Page 1 of 4

WCRRF WCG WASTE PROCESSING DATA SHEET

4.1[6][B] Parent Waste Container No.: _____

6.2[4] Date Processed: _____

4.1[6][B] Processing Activity (EP-DIV-AP-0107):
☐ > 190 mrem/hr ☐ PID ☐ Split ☐ Repack

4.1[6][B] Prohibited Items:
☐ Sealed Containers > 4L ☐ Liquids ☐ Pressurized Containers ☐ N/A

4.1[6][B] Parent Waste Container RCRA Designations: _____

4.1[7] Activity Hazard Classification based on Anticipated Extremity Radiation Dose Rate:
☐ Moderate (≤ 10 rem/hr) ☐ High/Complex (> 10 rem/hr)

4.3[1]/4.3[2] **($)** TA-50-69 is in the OPERATION or WARM STANDBY MODE (TSR 1.2) ☐ OPERATIONS ☐ WARM STANDBY ☐ N/A

4.3[4][B] Platform Scale: Equipment No.: _____
Cal. Due Date: _____

4.3[5][B] **($)** Three 1-Liter containers carbon spheroids or MET-L-X in WCG: (SAC 5.10.1.7.1) ☐ YES ☐ NO ☐ N/A

4.3[6] **($)** Stationary Fire Watch has been established:
(> 300 PE-Ci Equivalent Combustible)
(SAC 5.10.1.7.2) _____ (Initial and Date)

4.3[7 [A] Parent Waste Container degraded, loss of integrity, or weighs greater than 468 lb but less than or equal to 624 lb:
☐ YES ☐ NO ☐ N/A

4.3[8][D] WCG glove and bag-in/bag-out bag inspection: ☐ SAT ☐ UNSAT ☐ N/A

Performed By: _____ / _____ / _____ / _____
Waste Handling Tech (print) Signature Z # Date

ATTACHMENT 1
Page 2 of 4

4.1[6][B] Parent Waste Container No.: _____

5.[18] Prepared Parent Drum Weight (lb) including items secured to drum top, as applicable: _____ lb

6.2[5][A] Parent Drum Lead Blanket Weight (lb): _____ lb

6.2[5][B]/ 6.2[6] Total Parent Drum Weight (lb) _____ lb

6.2[7] **($)** Total Parent Drum Weight < 624 lb (SR 4.5.1): ☐ SAT ☐ UNSAT

6.2[28] Approval to leave a parent drum attached to the WCG overnight:

EWMO-FOD (print)	/ Signature	/ Z #	/ Date

ATTACHMENT 1
Page 3 of 4

4.1[6][B] Parent Waste Container No.: _____

Daughter Drums					
10.1[4]/10.2[4]	Daughter Drum No.				
10.1[4]	Daughter Drum Filter No.				
10.1[4]	Daughter Drum Bag Filter No.				
10.1[4]	Daughter Drum Purchase Order No.				
10.1[13][C]	WCG Fire Watch Stationed		☐ YES	☐ NO	☐ N/A
10.1[14][C][d]3/11.1[3]	WCG Fire Watch Secured		☐ YES	☐ NO	☐ N/A
10.2[4]	POC bag-on bag: Manufacturer				
	Model No.				
	Serial No.				
	Date of Manufacture				
10.2[5]	POC ID No				
10.2[7][B]/10.2[6]	POC Item Description				
10.2[13]	POC Assembly closed per Manufacturer's instructions. (Initial and Z#)				
10.2[14]	POC Assembly Gross Weight (lb)				
10.2[15]	POC Rad. Survey Results (mrem/hr)				
10.3[3][A]	Approx. Containerized Liquid Vol./Units				
10.3[5][A]	Free Liquid Volume/Units				
10.3[7][A]	Opaque/Non-penetrable Item Description:				
10.3[9][A]	PCB-contaminated Waste Description				
10.3[9][B]	PCB Item ID No.				
10.3[10]	Remaining Waste Description				
10.3[13]/10.4[10]/ 10.5[4]/10.6[10]	Daughter Drum % Full (%)				
10.5[3]/10.6[2]	Description Waste Added During Processing				

ATTACHMENT 1
Page 4 of 4

4.1[6][B] Parent Waste Container No.: _____

Comments: _____

_____
_____
_____
_____
_____
_____
_____
_____

11.1[1] Performed By: _____ / _____ / _____ / _____
Waste Handling Tech (print) Signature Z # Date

11.1[7] Reviewed By: _____ / _____ / _____ / _____
SOS or designee (print) Signature Z # Date/Time

ATTACHMENT 2
Page 1 of 1

WCRRF WCG CRITICAL LIFT PLAN CONCURRENCE SHEET

Critical Lift Concurrence

NOTE *By signing below, I hereby confirm that I have read and understand this critical lift plan, I concur with the information contained herein, and I am authorizing the work to proceed per this plan.*

Name/Signature	Assignment	Date
	Certified Hoisting/Rigging PIC	
	Drum Lift Operator (Certified Hoisting/Rigging Operator)	

ATTACHMENT 3
Page 1 of 2

WCRRF WCG DRUM LIFT INSPECTION DATA SHEET

6.1[2] Inspection Date: _____

6.1[4] Previous number of shaft bolt threads exposed:
- Upper Pulley Bolt Threads visible: _____
- Middle Pulley Bolt Threads visible: _____
- Lower Pulley Bolt Threads visible: _____

6.1[5] Current number of shaft bolt threads exposed:
- Upper Pulley Bolt Threads visible: _____
- Middle Pulley Bolt Threads visible: _____
- Lower Pulley Bolt Threads visible: _____

6.1[6] Shaft bolt end is flush with or extends out of the outer end of the shaft bolt locknut
- Upper Pulley Bolt Threads visible: ☐ YES ☐ NO
- Middle Pulley Bolt Threads visible: ☐ YES ☐ NO
- Lower Pulley Bolt Threads visible: ☐ YES ☐ NO

6.1[7] Shaft bolts do not show any sign of wear between the shaft bolt and the support flange (e.g., shaft not perpendicular to the flange plate):
- Upper Pulley Assembly: ☐ SAT ☐ UNSAT
- Middle Pulley Assembly: ☐ SAT ☐ UNSAT
- Lower Pulley Assembly: ☐ SAT ☐ UNSAT

6.1[9] New upper wire rope damage observed: ☐ YES ☐ NO

TABLE 3-1, UPPER WIRE ROPE DAMAGE

Description of Wire Rope Damage (e.g., wire break, corrosion, or pinch) (6.1[3]/6.1[10])	Previously Identified Damage (√) (6.1[3])	Damage Location from Hoist Drum (inches) (6.1[10])	Distance from damage to nearest wire break (inches) (6.1[10])

ATTACHMENT 3
Page 2 of 2

6.1[2] Inspection Date: _____

6.1[12] New lower wire rope damage observed: ☐ YES ☐ NO

TABLE 3-2, LOWER WIRE ROPE DAMAGE

Description of Wire Rope Damage (e.g., wire break, corrosion, or pinch) (6.1[3]/6.1[13])	Previously Identified Damage (√) (6.1[3])	Damage Location from Hoist Drum (inches) (6.1[13])	Distance from damage to nearest wire break (inches) (6.1[13])

6.1[14][A]/ 6.1[15] There is no more than one wire break within a 2-in. span along the wire rope: ☐ SAT ☐ UNSAT

Comments: _____

6.1[16][A]/ 11.1[1] Performed By: _____ / _____ / _____ / _____
Operator (print) Signature Z # Date

11.1[7] Reviewed By: _____ / _____ / _____ / _____
SOS or designee (print) Signature Z # Date/Time

ATTACHMENT 4
Page 1 of 1

WCRRF WCG BREACHING (OPENING) UNVENTED, SEALED WASTE PACKAGES

10.1[10][A] Parent Drum Container ID: _____ Page _____ of _____

Unvented-Sealed Waste Package type: (10.1[10][B])	☐ Metal 5- to 30-gal ☐ Non-metallic 5- to 30-gal ☐ < 5 gal	☐ Metal 5- to 30-gal ☐ Non-metallic 5- to 30-gal ☐ < 5 gal	☐ Metal 5- to 30-gal ☐ Non-metallic 5- to 30-gal ☐ < 5 gal	☐ Metal 5- to 30-gal ☐ Non-metallic 5- to 30-gal ☐ < 5 gal
($) Non-spark producing tools available in WCG. (SAC 5.10.1.6.1) (10.1[10][C])	☐ YES ☐ NO			
($)WCG electrical receptacles de-energized and locked open/off. (SAC 5.10.1.6.2) (10.1[10][D])	☐ SAT ☐ UNSAT			
($) 5- to 30-gal waste package lid restraint inspected for degradation (e.g., no indication of cracked parts, missing fasteners, loose or frayed parts, excessive wear, or unusual deformation), and determined to be capable of restricting lid. (SAC 5.10.1.5.1) (10.1[11][A])	☐ SAT ☐ UNSAT ☐ N/A < 5 gal	☐ SAT ☐ UNSAT ☐ N/A < 5 gal	☐ SAT ☐ UNSAT ☐ N/A < 5 gal	☐ SAT ☐ UNSAT ☐ N/A < 5 gal
($) Waste package lid restraint attached to waste package and proper installation verified. (SAC 5.10.1.5.1) (10.1[11][B])	☐ SAT ☐ UNSAT ☐ N/A < 5 gal	☐ SAT ☐ UNSAT ☐ N/A < 5 gal	☐ SAT ☐ UNSAT ☐ N/A < 5 gal	☐ SAT ☐ UNSAT ☐ N/A < 5 gal
($) Time 5- to 30-gal lid and lid restraint removed from the waste package. (Start Time) (SAC 5.10.1.5.2) or SAC 5.10.1.6.3) (10.1[11][I])	_____ ☐ N/A < 5 gal	_____ ☐ N/A < 5 gal	_____ ☐ N/A < 5 gal	_____ ☐ N/A < 5 gal
($) Time since 5- to 30-gal lid and lid restraint removed from the waste package. (SAC 5.10.1.5.2) or SAC 5.10.1.6.3) (10.1[11][K])	_____ ☐ N/A < 5 gal	_____ ☐ N/A < 5 gal	_____ ☐ N/A < 5 gal	_____ ☐ N/A < 5 gal
($) Elapsed time since 5- to 30-gal lid and lid restraint removed from waste package is ≥ 30 minutes, and glovebox operations may resume and WCG electrical receptacles may be re-energized. (SAC 5.10.1.5.2) or SAC 5.10.1.6.3) (10.1[11][K])	☐ SAT ☐ UNSAT ☐ N/A < 5 gal	☐ SAT ☐ UNSAT ☐ N/A < 5 gal	☐ SAT ☐ UNSAT ☐ N/A < 5 gal	☐ SAT ☐ UNSAT ☐ N/A < 5 gal
($) Time < 5-gal lid removed from the waste package. (Start Time) (SAC 5.10.1.6.3) (10.1[12][B])	_____ ☐ N/A > 5 gal	_____ ☐ N/A > 5 gal	_____ ☐ N/A > 5 gal	_____ ☐ N/A > 5 gal
($) Time since < 5-gal lid removed from the waste package. (End Time) (SAC 5.10.1.6.3) (10.1[12][C][a])	_____ ☐ N/A > 5 gal	_____ ☐ N/A > 5 gal	_____ ☐ N/A > 5 gal	_____ ☐ N/A > 5 gal
($) Elapsed time since < 5-gal lid removed from waste package is ≥ 30 minutes, and WCG electrical receptacles may be re-energized. (SAC 5.10.1.6.3) (10.1[12][C][a])	☐ SAT ☐ UNSAT ☐ N/A > 5 gal	☐ SAT ☐ UNSAT ☐ N/A > 5 gal	☐ SAT ☐ UNSAT ☐ N/A > 5 gal	☐ SAT ☐ UNSAT ☐ N/A > 5 gal

Comments: _____

11.1[1] Performed By: _____ / _____ / _____ / _____
Operator (print) Signature Z # Date

11.1[7] Reviewed By: _____ / _____ / _____ / _____
SOS or designee (print) Signature Z # Date/Time

ATTACHMENT 5
Page 1 of 1

WCRRF WCG BREACHING (OPENING) 5- to 30-gal
METAL UNVENTED, SEALED WASTE PACKAGE SURVEILLANCE

10.1[10][E][a] Waste Container ID: _____

10.1[10][E][b] **($)** 55-gal parent drum containing an unvented-sealed METAL 5- to 30-gal waste package grounded to the WCG with a grounding strap that is firmly attached at all ends to clean-bare metal surfaces. (SR 4.6.1) ☐ SAT ☐ UNSAT

10.1[10][E][c] **VERIFY** that the grounding strap is attached ☐ SAT ☐ UNSAT

10.1[11][C] **($)** Unvented-sealed METAL 5- to 30-gal waste package grounded to the WCG with a grounding strap that is firmly attached at all ends to clean-bare metal surfaces. (SR 4.6.1) ☐ SAT ☐ UNSAT

10.1[11][D] **VERIFY** that the grounding strap is attached ☐ SAT ☐ UNSAT

11.1[11[E] Verified By: _____ / _____ / _____ / _____
Print Signature Z # Date

Comments: _____

11.1[1] Performed By: _____ / _____ / _____ / _____
Waste Handling Tech (print) Signature Z # Date

11.1[2][D] Reviewed By: _____ / _____ / _____ / _____
CSE (print) Signature Z # Date

11.1[6][A] Acceptance criteria satisfied: ☐ YES ☐ NO

11.1[7] Reviewed By: _____ / _____ / _____ / _____
SOS or designee (print) Signature Z # Date/Time

ATTACHMENT 6
Page 1 of 1

WCRRF PROHIBITED ITEM COLLECTION DRUM DATA SHEET

Container No. (10.3[8][B][e]):	Type (10.3[8][B][e]): ☐ Pressurized Container ☐ Aerosol Cans ☐ Other: _____	PE-Ci Value: **8 PE-Ci**	Date Created (10.3[8][B][e]):	Page _____ of _____

Date Item Added (10.3[8][B][e])	Item ID No. (10.3[8][B][e])	Parent Container No. (10.3[8][B][e])	Parent Accumulation Start Date (10.3[8][B][e])	Parent EPA Codes (10.3[8][B][e])	Item Description (10.3[8][B][e])	Item Shape (10.3[8][B][e])	Item Size (10.3[8][B][e])	Item Labeling (10.3[8][B][e])	Item Weight (lb) (10.3[8][B][e])	Initials/Z# (10.3[8][B][e])

ENCLOSURE 3

EP-WCRR-WO-DOP-0233, R38: WCRRF Waste Characterization Glovebox Operations

ENV-DO-14-0178

LA-UR-14-25293

Date: JUL 29 2014

WCRRF Waste Characterization Glovebox Operations

Effective Date: 08/29/13

NOTE *This procedure may be either a Moderate or High/Complex Hazard activity based on the anticipated radiation levels during the performance of the activity in accordance with P300 requirements.*

Hazard Class:	☐ Low	☒ Moderate	☒ High/Complex
Usage Mode:	☐ Reference	☐ UET	☒ Both UET & Reference

The Responsible Manager has determined that the following organizations' review/concurrence is required for the initial document and for major revisions a same type and level review is required. Review documentation is contained in the Document History File:

TRU Waste Project Support
Engineering
Quality Assurance
Radiation Protection
Industrial Hygiene and Safety
Subject-Matter Expert
Environmental Stewardship
Operations Support
Shift Operations Manager

Responsible Manager, LTP-DDP Operations Manager

Name (print)	Z#	Signature	Date
Lou Jalbert	121997	/s/ Lou Jalbert	08/29/13

Classification Review: ☐ N/A ☒ Unclassified ☐ UCNI ☐ Classified _____

Name (print)	Z#	Signature	Date
Art Crawford	080070	/s/ Art Crawford	08/28/13

Working Copy / Information Only (circle one)
Initials / Date: _____/_____

This document fully satisfies the requirements of P300, Integrated Work Management, in order to systematically describe the work activity, the associated hazards, and the controls that **MUST** be employed to mitigate the risks.

REVISION HISTORY

Document Number	Issue Date	Action	Description
EP-WCRR-WO-DOP-0233, R.0	May 2007	New Document	
EP-WCRR-WO-DOP-0233, R.1	June 2007	Major Revision	Added requirement to move assay equipment outside of the WCG exclusion zone when not in use. Added precaution to prevent addition of items from multiple parent drums into a single daughter drum or Pipe Overpack Container. Added precaution for prohibited items – Class 1 oxidizers such as nitrates and reactive flammables.
EP-WCRR-WO-DOP-0233, R.2	June 2007	Major Revision	Added steps for dispositioning of potential pressurized containers.
EP-WCRR-WO-DOP-0233, R3	July 2007	Major Revision	Added steps for disposition of liquids. Added steps for actions to be taken in the event that any actual or suspected Class 1 oxidizers, flammables, or Pyrophoric materials/items are encountered.
EP-WCRR-WO-DOP-0233, R4	July 2007	Major Revision	Made use of glovebag to process Pu-238 inside the WCG optional based on input from the Facility ALARA Review Committee.
EP-WCRR-WO-DOP-0233, R5	July 2007	Major Revision	Added precaution for performance of diligent glove surveys and periodic glovebox wipe-downs when handling Pu-238. Deleted requirement for use of glovebag to process Pu-238 inside the WCG. Deleted Note in Sect. 8.12 which referenced use of partially filled POC's if all waste is from the same waste stream.
EP-WCRR-WO-DOP-0233, R.6	October 2007	Major Revision	Added precaution to prohibit remediation of following in the WCG 1) sealed containers > 4 liters that have a positive locking mechanism, 2) sealed un-vented containers > 4 liters with free liquids. Added action steps to take if containers are encountered. Added "allowed" container types that may be remediated. Added Attachment 3: Real Time Radiography Review for "Un-Allowed" Contents
EP-WCRR-WO-DOP-0233, R.7	October 2007	Minor Revision	Revised wording in Attachment 3 for review of RTR data.
EP-WCRR-WO-DOP-0233, R.8	October 2007	Major Revision	Deleted requirement for Real Time Radiography review & Attachment 3 (will be performed IAW EP-WCRR-WO-DOP-0211). Added section for processing high dose waste items (> 190 mrem/hr) of mixed material types. Added Attachment 3: Flowchart for Processing of High Dose Items of Mixed Material Types.
EP-WCRR-WO-DOP-0233, R.9	TBD	Major Revision	Incorporate the WCRR TSR page change to allow the opening of unvented 5- to 30-gal waste packages inside of the WCG.
EP-WCRR-WO-DOP-0233, R.10	January 2008	Major Revision	Delete requirement for SOM & CSE review of grounding sealed containers prior to venting.
EP-WCRR-WO-DOP-0233, R.11	March 2008	Minor Revision	Revised page 7 of 31 to include processing items that are heavy.

REVISION HISTORY (continued)

Document Number	Issue Date	Action	Description
EP-WCRR-WO-DOP-0233, R12	April 2009	Major	Revise procedure to incorporate the WCRRF TSR Revision 1 changes to the minimum staffing requirements which allows for the SOM to be on-call in the Operations Mode and now includes the requirements for the SOS (requires that the SOS be present at WCRRF during the Operations Mode and on-call in the Warm Standby Mode). This revision does not introduce any new hazards in this procedure. Update forms are required.
EP-WCRR-WO-DOP-0233, R13	May 11, 2009	Minor Revision	Revise procedure to provide guidance for the operator that the glovebox operations may continue after opening a < 5 gal unvented container without waiting 30 min., but the WCG electrical receptacles cannot be re-energized until 30 min. has elapsed since the unvented container was opened. Add additional instructions for creating loops within the document to address waste packages imbedded within other waste packages. This revision does not introduce any new hazards.
EP-WCRR-WO-DOP-0233, R14	June 12, 2009	Major Revision	Revise procedure to incorporate editorial corrections and to provide instructions for what to do when a shielded container is encountered containing radioactive material that exceeds the RWP limit. Add instructions to record the Waste Container Identification Number on the applicable attachments. This revision does not introduce any new hazards.
EP-WCRR-WO-DOP-0233, R15	November 24, 2009	Major Revision	Revise procedure to incorporate instructions for establishing, controlling, and the disposition of the Prohibited Item Collection Drum. Make editorial corrections as necessary. This revision does not introduce any new hazards.
EP-WCRR-WO-DOP-0233, R16	Approved for Training	Major Revision	Revise procedure to perform a pH test using pH strips and change “absorbent” to “approved absorbent” in Appendix 2. Make editorial corrections as necessary. This revision does not introduce any new hazards.
EP-WCRR-WO-DOP-0233, R17	February 18, 2010	Major Revision	Revise procedure to incorporate instructions for recording additional information for the prohibited items placed in the prohibited item collection drum. Incorporate process improvements (step sequences) and make editorial corrections as necessary. This revision does not introduce any new hazards. Incorporate the requirements of P300 and the hazards and controls from JHA 0008741 into this procedure.

REVISION HISTORY (continued)

Document Number	Issue Date	Action	Description
EP-WCRR-WO-DOP-0233, R18	March 22, 2010	Major Revision	Revise procedure to incorporate instructions for glovebox glove inspections and make editorial corrections as necessary. This revision does not introduce any new hazards.
EP-WCRR-WO-DOP-0233, R19	Training Only	Major Revision	Revise procedure to incorporate formality of operations into the procedure and incorporate the four parts of an integrated work document into the procedure in accordance with P300. Change title to WCRRF Waste Characterization Glovebox Operations. This revision is a total rewrite and revision bars have been omitted. This revision does not introduce any new hazards. This revision supersedes the following procedures: • EP-WCRR-WO-DOP-0223, Revision 4 • EP-WCRR-WO-DOP-0231, Revision 4 • EP-WCRR-WO-DOP-0232, Revision 8 • EP-WCRR-WO-DOP-0233, Revision 18
EP-WCRR-WO-DOP-0233, R20	October 27, 2010	Major Revision	Revise procedure to remove the requirements of SAC 5.10.1.2(1) in accordance with TSR Page Change 1.2, the fire blanket and MET-L-X is no longer a TSR requirement. The MET-L-X is being left as an administrative control. Make editorial corrections such as format changes. This revision does not introduce any new hazards.
EP-WCRR-WO-DOP-0233, R.21	November 2, 2010	Major Revision	Revise procedure to require that Building TA-50-69 is in the OPERATION mode for all activities in the procedure. Remove the Note in front of Step 4.3[7]. Add “approximately halfway” to Step 5.[9]. Change WARNING before Step 6.1[11] to indicate that there is no drum on the lift at this time. Revise Step 10.3[3] to remove requirement for testing a small portion of liquid and provide additional guidance for absorbing liquid. Make editorial corrections such as format changes. This revision does not introduce any new hazards.
EP-WCRR-WO-DOP-0233, R.22	November 8, 2010	Minor Revision	Revise procedure to modify hold tag note in Section 10.3 and modify step 10.3[2]. This revision does not introduce any new hazards.
EP-WCRR-WO-DOP-0233, R.23	February 8, 2011	Major Revision	Revise procedure to correct the TSR references and to allow the replacement of WCG bags in the WARM STANDBY mode. This revision does not introduce any new hazards.

REVISION HISTORY (continued)

Document Number	Issue Date	Action	Description
EP-WCRR-WO-DOP-0233, R.24	February 13, 2011	Minor Revision	Revise procedure to correct references and to provide clarification for the closure of a POC. Provide additional guidance for securing the horsetail during bag-in/bag-out operations. Make editorial corrections as necessary. This revision does not alter the purpose, scope, or intent of the original document. This revision does not introduce any new hazards.
EP-WCRR-WO-DOP-0233, R.25	April 13, 2011	Minor Revision	Revise procedure to incorporate process improvements. Incorporate instructions as to what to do if the parent drum closure ring cannot be reinstalled before lowering the parent drum. Make editorial corrections as necessary. This revision does not alter the purpose, scope, or intent of the original document. This revision does not introduce any new hazards.
EP-WCRR-WO-DOP-0233, R.26	April 18, 2011	Minor Revision	Revise procedure to provide instructions for loosening the nut on the closure ring bolt before lifting the waste drum up to the WCG. Make editorial corrections as necessary. This revision does not alter the purpose, scope, or intent of the original document. This revision does not introduce any new hazards.
EP-WCRR-WO-DOP-0233, R.27	June 9, 2011	Minor Revision	Revise procedure to provide instructions for inspecting drum lift hinge pins and attaching hinge pin retaining clips in Section 6.2; and add note that the retaining clips must be ML-2. Update equipment list to reflect ML-2 retaining clip. Make editorial corrections as necessary. This revision does not alter the purpose, scope, or intent of the original document. This revision does not introduce any new hazards.
EP-WCRR-WO-DOP-0233, R.28	August 10, 2011	Major Revision	This procedure is being revised to allow for bagging a POC onto the WCG, to correct the actions to be taken if a drum is stuck on the WCG drum lift, and to allow for processing waste at greater than 10 rem/hr. This last issue makes the activity a High/Complex Hazard Activity. The HA has been modified to allowed for the procedure to be performed as a Moderate or High/Complex Hazard Activity.
EP-WCRR-WO-DOP-0233, R.29	August 12, 2011	Minor Revision	Revise procedure to correct the high/complex activity hazard classification step in Attachment 1 to "> 10 rem/hr." This revision does not introduce any new hazards.

REVISION HISTORY (continued)

Document Number	Issue Date	Action	Description
EP-WCRR-WO-DOP-0233, Rev 29 IPC-1	August 29, 2011	IPC-1	Revised to change word in step 5.[11] from below to above and a caution and additional language to step 5[12] added ENSURE banding material is not placed around the hoop.
EP-WCRR-WO-DOP-0233, R.30	Training Only	Minor Revision	Revised to update requirements from page change 2.0 and 2.1 associated with STATIONARY Fire Watch in precautions, limitations and associated. Steps of the procedure when inventory is greater than >300 PE Ci. A STATIONARY FIRE WATCH is required in OPERATIONS and WARM STANDBY MODE when the WCG contains INVENTORY > 300 PE-Ci of EQUIVALENT COMBUSTIBLE WASTE. (SAC 5.10.1.7.1) and WCG SHALL be equipped with three 1-litre containers of carbon spheroids or MetL-X when the glovebox INVENTORY is >300 PE-Ci of EQUIVALENT COMBUSTIBLE WASTE (SAC 5.10.1.7.2), and WCG operators SHALL be trained in glovebox fire suppression techniques in order to extinguish small, early developing fires when processing INVENTORY > 300 PE-Ci of EQUIVALENT COMBUSTIBLE WASTE, in coordination with the STATIONARY FIRE WATCH, . This revision has not introduced any additional changes to the JHA.
EP-WCRR-WO-DOP-0233, R.31	Training Only	Minor Revision	Revise procedure to incorporate WCRRF TSR 2.0/2.1 IVR issues. Make editorial corrections as necessary. Revision does not introduce any additional hazards.
EP-WCRR-WO-DOP-0233, R.32	January 31, 2012	Minor Revision	Revise steps referencing 300 PE-Ci to add “equivalent combustible” after PE-Ci. Revision does not introduce any additional hazards.
EP-WCRR-WO-DOP-0233, R.33	April 5, 2012	Minor Revision	Revise procedure to incorporate instructions for the introduction of supplies into the WCG, for leaving a parent drum attached to the WCG overnight, and modify actions for a drum lift deficiency. Make editorial corrections such as correcting step numbering. Revision does not introduce any additional hazards.
EP-WCRR-WO-DOP-0233, R.34	May 24, 2012	Minor Revision	Revise procedure to provide guidance on simulating waste in a drum when obtaining radiation surveys and add the use of the Trolley Rail Clamp. Make editorial corrections such as correcting references. Revision does not introduce any additional hazards.

REVISION HISTORY (continued)

Document Number	Issue Date	Action	Description
EP-WCRR-WO-DOP-0233, R.35	July 2, 2012	Major Revision	Revised to separate verification steps from actual steps in Section 10.1 [10][D] and 10.1[10][E], 10.1[11][C], and reword Step 10.1[11][O] to read If directed by Supervision as a pre condition and Attachment 4 & 5 . Added steps for instructions for Administrative Lock Log, key, and lock Section 10. Added Steps to Section 4.1, 6.2, and 7.1 for using the Trolley Clamp Device. No additional hazards were identified during this revision. Rev bars in left column display locations of changes to the procedure.
EP-WCRR-WO-DOP-0233, R.36	August 1, 2012	Major Revision	Revised procedure to incorporate EP-SO-1708, and add steps to clarify the amount of absorbent needed when processing Nitrate Salts. Also added Appendix 6 Administrative Control Lock Log Sheet. No additional hazards were identified during this revision. Revision bars in the left column display location of changes in the procedure.
EP-WCRR-WO-DOP-0233, R.37	March 20, 2013	Major Revision	Revise procedure to allow flexibility with the processing of Nitrate Salts in order to permit flexibility with the amount of absorbent used. Make editorial corrections as necessary. Delete reference to the initiation of an NCR for issues associated with the waste material. No additional hazards were identified during this revision.
EP-WCRR-WO-DOP-0233, R.38	August 29, 2013	Major Revision	Revise procedure to incorporate steps for the implementation of WCATS at WCRRF. Make editorial corrections as necessary. This revision does not introduce any new hazards.

TABLE OF CONTENTS

Section Page

TITLE PAGE 1
REVISION HISTORY 2
TABLE OF CONTENTS 8

1. PURPOSE 10

2. SCOPE 10

3. PRECAUTIONS AND LIMITATIONS 11

4. PREREQUISITES ACTIONS 18
4.1 Planning and Coordination 18
4.2 Materials and Equipment 20
4.2.1 Special Tools and Equipment 20
4.2.2 Consumables 20
4.2.3 Measurement and Test Equipment (M&TE) 21
4.3 Field Preparation 21

5. PERFORMANCE—PARENT WASTE CONTAINER PREPARATION 29

6. PERFORMANCE—WCG PARENT DRUM LOADING/UNLOADING 32
6.1 WCG Drum Lift Daily Inspection 32
6.2 Parent Drum Loading 36
6.3 Parent Drum Unloading 40

7. PERFORMANCE—WCG PARENT DRUM BAG-ON/BAG-OFF OPERATIONS 43
7.1 Parent Drum Bag On 43
7.2 Parent Drum Bag Off 45

8. PERFORMANCE—WCG DAUGHTER DRUM, BAGPORT, OR GLOVEPORT BAG-ON/BAG-OFF OPERATIONS 50
8.1 Bag On Daughter Drum, Bagport, or Gloveport 50
8.2 Bag Off Daughter Drum 52

9. PERFORMANCE—ITEM BAG-IN/BAG-OUT OPERATIONS 56
9.1 WCG Item Bag-Out 56
9.2 WCG Introductory Port 60

10. PERFORMANCE—WCG WASTE PROCESSING 62
10.1 WCG Waste Processing Preparation 62
10.2 Waste Material Greater Than 190 mrem/hr 73
10.3 Prohibited Item Disposition 77
10.4 Waste Splitting Activities 83
10.5 Repackaging Activities 85
10.6 Processing Nitrate Salt Drums 86

TABLE OF CONTENTS (continued)

Section Page

11. POST-PERFORMANCE ACTIVITY 88
11.1 Disposition 88
11.2 Records Processing 90

12. REFERENCES 91

Appendices
Appendix 1, Waste Drum Critical Lift Plan 93
Appendix 2, WCRRF Allowable Container Types For Remediation 96
Appendix 3, Example Preoperational Inspection Record For Overhead Cranes and Hoists 97
Appendix 4, Volumes of Cylindrical Inner Containers Near 4 Liters 98
Appendix 5, Flowchart For Processing of High Dose Items of Mixed Material Types 99
Appendix 6, Administrative Control Lock Log Sheet 100

Attachments
Attachment 1, WCRRF WCG Waste Processing Data Sheet 101
Attachment 2, WCRRF WCG Critical Lift Plan Concurrence Sheet 105
Attachment 3, WCRRF WCG Drum Lift Inspection Data Sheet 106
Attachment 4, WCRRF WCG Breaching (Opening) Unvented, Sealed Waste Packages Checklist 108
Attachment 5, WCRRF WCG Breaching (Opening) Metal 5- to 30 gal Unvented6 Sealed Waste Package Surveillance 109
Attachment 6, WCRRF Prohibited Item Collection Drum Data Sheet 110

1. PURPOSE

This procedure provides detailed instructions for Waste Characterization Glovebox (WCG) operations at the Waste Characterization, Reduction, and Repacking Facility (WCRRF).

TRU waste that has been identified as not satisfying Waste Isolation Pilot Plant (WIPP) acceptance criteria must be remediated to satisfy the WIPP criteria. Prohibited items must be removed or corrected and the container must also satisfy limits on the amount of radioactive material in each container. Containers that fail to satisfy the WIPP criteria maybe sent to WCRRF to be safely remediated in the WCG.

2. SCOPE

This procedure applies to personnel who perform WCG operations.

The Performance sections of this procedure may be performed independently or in conjunction with other Performance sections.

As used within this procedure a parent waste container is the originating waste container received at WCRRF for processing and a daughter drum is the resulting waste container packaged with the originating waste container waste. There may be multiple daughter drums.

This procedure addresses the following WCG activities:

- Preparation of parent waste containers
- Daughter drum, bagport, and gloveport bag-on/bag-off operations
- Parent drum bag-on/bag-off operations
- Parent drum WCG loading/unloading operations
- WCG waste processing

This procedure addresses the following activities for the complete processing and disposition of waste material within the WCG:

- Visual Examination (VE)
- Prohibited Item Dispositioning (PID)
- Pipe Overpack Component (POC)
- Waste Splitting
- Repackaging

2. SCOPE (continued)

This procedure is performed in conjunction with the Waste Compliance and Tracking System (WCATS), in order to track the WCRRF and Building TA-50-69 radioactive material inventory, populate WCATS with waste container information, to generate Transuranic (TRU) Waste Storage Records (TWSRs), to generate labels, and to associate new daughter waste containers with the parent waste container.

The performance of this procedure may be classified as a Moderate or High/Complex Hazard activity based on the potential radiation levels encountered during the performance of this activity. To accommodate the two hazard classifications this document requires the identification of the potential radiation levels that may be encountered and documentation of the hazard classification level (moderate or high/complex).

3. PRECAUTIONS AND LIMITATIONS

- This procedure contains special procedure step markings. **($)** is used to identify steps that implement WCRRF Safety Basis requirements. Steps containing **($)** may not be changed without Engineering approval to ensure the safety envelope is maintained.

- To comply with the intent of the As Low As Reasonably Achievable (ALARA) Program, all personnel **SHALL** apply the principles of time, distance, and shielding when working with radiological materials.

- Avoid the open area of a shielded container to prevent an increased exposure to radiation which could result from the streaming of radiation while accessing shielded containers during the processing of waste.

- Activities, items, and containers **SHALL** satisfy approved design specifications, regulatory requirements, process-specific parameters, and procedural requirements. Activities, items, or containers that do not conform to the approved specifications and requirements are considered nonconforming and Nonconformance Reports (NCRs) **SHALL** be generated in accordance with P330-6, Nonconformance Reporting, as required.

- When a worker observes an unsafe condition or act that may pose an imminent danger or other safety concern/hazard, the worker has the authority and responsibility to inform the worker engaged in the work and request that the work activity be paused and/or stopped based on the risk posed to the individual, the employees, the environment, or the facility in accordance with P101-18, Procedure for Pause/Stop Work.

3. PRECAUTIONS AND LIMITATIONS (continued)

- Supervision **SHALL** be notified if this procedure cannot be performed as written.

- Not Applicable (N/A) is documented on the attachments during the performance of this procedure indicating information that is not required to be recorded.

- **($)** TRU WASTE CONTAINERS **SHALL** not be stacked and **SHALL** not be lifted higher than 4 ft, excluding the WCG drum lift and lifts during loading or unloading from delivery trucks. (SAC 5.10.2.2)

- Drums **SHALL** not be lifted greater than 4 ft during any operation involved in preparing the drum.

- This procedure **SHALL** not be used to prepare DEGRADED/LOSS OF INTEGRITY drums. DEGRADED/LOSS OF INTEGRITY drums are prepared in accordance with EP-WCRR-WO-DOP-0236, WCRRF Loading/Unloading SWB or 85-Gal Drum.

- **($)** Drums **SHALL** be verified to weigh less than 630 lb before lifting the drums using the WCG drum lift. (SR 4.5.1) Administratively drum weights **SHALL** be limited to 624 lb in order to take into consideration the uncertainties of the instrumentation.

- This procedure is to be performed only by Waste Handling Operators as qualified Glovebox Operators.

- To avoid pinch points, the drum lift pendant operator **SHALL** announce operation of the drum lift before commencing raising/lowering of a drum and that all personnel **SHALL** stand clear and to the side of drum movement.

- **($)** The facility must be in the OPERATION MODE to process waste in the WCG. (TSR 1.2)

- The approximate weight of load should be known before moving and the appropriate capacity lift selected. Be aware of uneven loading and shifts in the load when moving.

- Drums can have sharp edges and create pinch points when being moved – use appropriate gloves when handling drums.

3. PRECAUTIONS AND LIMITATIONS (continued)

- Use proper lifting techniques and buddy system and wear steel toed shoes when performing heavy lifting or movements and comply with the requirements of EP-DIV-Policy-20057, EWMO Health and Safety Policy-Manual Movement.

- **($)** No flammable liquids or gases, and no combustible liquids with NFPA Flammability Rating greater than 1 **SHALL** be stored or used within BUILDING TA-50-69 when INVENTORY is in BUILDING TA-50-69 except three size 1 cylinders of P-10 gas and flammable or combustible liquids found in the TRU WASTE CONTAINER. (LCO 3.4.2)
- Portable high-efficiency particulate air (HEPA) filter ventilation equipment **SHALL** be removed from the WCG Exclusion Area after operations are complete. This limitation supports LCO 3.4.2.

- Due to the unique characteristics of Pu-238, diligent glove surveys should be performed before and after handling Pu-238, as well as periodic glovebox wipe downs.

- All operators involved in the execution of this procedure must be qualified as Waste Handling Operators.

- Fire Patrol or Stationary Fire Watch **SHALL** be established in accordance with the applicable Technical Safety Requirements and identified in EP-DIV-AP-0120, EWMO Watchbill Administration.

- STATIONARY FIRE WATCH **SHALL** be performed in accordance with EP-DIV-AP-0120, EWMO Watchbill Administration.

- **($)** WCG **SHALL** be equipped with three 1-liter containers of carbon spheroids or Met-L-X when the glovebox INVENTORY is > 300 PE-Ci of EQUIVALENT COMBUSTIBLE WASTE. (SAC 5.10.1.7.1)

- An administrative control will ensure that the WCG will be equipped with three 1-liter containers of carbon spheroids or MET-L-X to prevent the potential spread of a fire in the glovebox regardless of the inventory quantity in the WCG.

- **($)** A STATIONARY FIRE WATCH **SHALL** be in place when the WCG contains INVENTORY > 300 PE-Ci of EQUIVALENT COMBUSTIBLE WASTE, in order to extinguish small, early developing fires, in coordination with WCG operators. (SAC 5.10.1.7.2)

- When processing a parent drum if an item is encountered to be too large or heavy to handle supervision is to be notified.

3. PRECAUTIONS AND LIMITATIONS (continued)

- Use caution when performing glovebox operations. Operations may involve handling of sharp objects, applying force to objects with tools, lifting heavy materials or items.
  - The glovebox gloves **SHALL** have cut resistant (e.g., leather, or HexArmor®) gloves over them during glovebox operations when handling sharp objects or opening/closing waste containers.
  - Use the two-man rule when lifting heavy materials or items.
  - Cut or apply force away from hands and arms.
  - Use approved tools and techniques.
  - Tools **SHALL** be in good working order.

- **($)** WCG operators **SHALL** be trained in glovebox fire suppression techniques in order to extinguish small, early developing fires when processing INVENTORY > 300 PE-Ci of EQUIVALENT COMBUSTIBLE WASTE, in coordination with the STATIONARY FIRE WATCH. (SAC 5.10.1.7.3)

- Unvented, sealed waste packages are those waste packages that have a positive locking mechanism, such as a gasket with drum closure ring or a screw top lid (with no other openings) to seal the lid to the waste package.

- **($)** When breaching (opening) unvented, sealed waste packages in the WCG the following requirements **SHALL** be satisfied:
  - Non-sparking tools and processes **SHALL** be used, (SAC 5.10.1.6.1)
  - Electrical receptacles within the WCG **SHALL** be de-energized before opening the waste package and remain de-energized for a minimum of 30 minutes after removing the lid and lid restraining device. (SAC 5.10.1.6.2) and (SAC 5.10.1.6.3)

- **($)** Before breaching (opening)an unvented, sealed 5- to 30-gal waste packages in the WCG a lid restraining device **SHALL** be inspected for degradation and properly installed (SAC 5.10.1.5.1), and WCG operations **SHALL** be ceased for a minimum of 30 minutes following the removal of the waste package lid and lid restraining device (breaching). (SAC 5.10.1.5.2)

- **($)** When processing a positively sealed 30- to 5-gallon metal WASTE PACKAGE in the WCG, the parent 55-gallon drum bagged-on to the WCG and metal WASTE PACKAGE **SHALL** be grounded when the metal WASTE PACKAGE is breached and for 30 minutes after the removal of the lid and lid restraining device. (LCO 3.6)

3. PRECAUTIONS AND LIMITATIONS (continued)

- Personnel **SHALL** be aware of heat and cold stress indicators and observe co-workers in accordance with the Thermal Stress Awareness Course.

- Personnel protective equipment (PPE) **SHALL** be worn (e.g., safety shoes, cut resistance gloves, and respirator) as required by Industrial Hygiene/Health and Safety and in accordance with the Radiological Work Permit (RWP).

- Sharp objects **SHALL** be covered and properly stored when not in use. Wear cut/puncture resistant glove (e.g., leather) and cut away from your body when in use.

- All sharp objects that are introduced inside the glovebox **SHALL** be properly identified and stored when not in use in accordance with EP-DIV-AP-20047, LTP Glovebox/Glovebag and Glove Safety Program.

- Routine inspection of glovebox gloves **SHALL** be conducted in accordance with EP-DIV-AP-20047 and this procedure.

- To prevent personnel injury due to ergonomic, pinch point, and other general hazards, personnel **SHALL** maintain an awareness of the working environment and task activities and use good work practices and techniques, skill of craft, good ergonomic practices, and minimize time in awkward/uncomfortable positions.

- Spark-producing and non-sparking tools **SHALL** be distinguished from each other. Spark-producing tools are to be set aside in the WCG, and not handled, when non-sparking tools are required.

- A cordless drill may be used to open a parent drum. This will minimize overextending glovebox gloves and potential damage (i.e., tearing a glove) when using a ratchet. The cordless drill is considered to be a spark-producing tool and is to be placed aside in the WCG, and not handled, when non-sparking tools are required.

- Charging of portable electric equipment in the WCG **SHALL** not be performed when there is INVENTORY in the WCG.

- Charging of battery operated equipment external to the WCG **SHALL** not be charged within the WCG exclusion zone.

3. PRECAUTIONS AND LIMITATIONS (continued)

- If receptacle inside the WCG or in the WCG exclusion zone is used, the equipment being plugged in must be in the OFF position before inserting or removing the plug at the receptacle.

- Prohibited items are documented by two distinct processes. One is through the use of the fast scan process, indicated by the GREEN hold tag. The second is through the use of CCP's NCR, indicated by a RED hold tag.

- If during a Green Drum Campaign a suspected special shape is identified while performing VE, Repackaging, or PID, refer to EP-WCRR-RM-AOP-0208, Special Shapes on how to handle the suspected special shape.

- Waste placed into daughter drums or Pipe Overpack Containers (POCs) must be from a single parent drum.

- Based on waste acceptance criteria, Class 1 oxidizers such as nitrates, and reactive flammables such as lithium metal or hydrides are prohibited items in the WCRRF.

- Liquids removed from a parent drum must be remediated (absorbed) inside of a new container.

- Storage of drum lid restraints when <u>not</u> in use **SHALL** be such that the drum lid restraints are protected from degradation (e.g., daughter drum).

- Avoid slips, trips, and falls by wearing the proper footwear with slip-resistant soles and using handrails when using stairs. Use established pathways when available and avoid walking on uneven or unstable surfaces.

- Glass sample vials may contain residual granular plutonium hydride which can generate sparks when subjected to mechanical agitation. To reduce the possibility of breaking a glass sample vial and the generation of sparks, glass sample vials **SHALL** be handled with care and void volume reduction activities **SHALL** be performed without excessive force. (EP-DIV-REPORT-09)

- The fire protection system sprinkler head located in the WCG is a water source that if activated (inadvertently or as a result of an actual WCG fire) would result in the spread of radiological contamination. Contact with the sprinkler head during waste processing is to be avoided in order to reduce the possibility of the inadvertent initiation of water flow into the WCG.

3. PRECAUTIONS AND LIMITATIONS (continued)

- **($)** No combustibles **SHALL** be stored within the waste characterization glovebox (WCG) exclusion zone. The WCG exclusion zone is 10 ft around the WCG, up to GBE, or up to the walls of Room 102, whichever is less. (LCO 3.4)

  The following are excluded from the above limitations of LCO 3.4
  - INVENTORY that is in the WCG or staged in BUILDING TA-50-69.
  - Combustible components of support equipment (e.g., wiring insulation, operator platforms and rubber mats) within the WCG Exclusion Zone and associated with WCG processing.
  - Drum liners or wrapping around DEGRADED/LOSS OF INTEGRITY drums that are inside BUILDING TA-50-69 being loaded and working amounts of material necessary to complete bag on/off operations such as tape, cheese cloth, and extra operator gloves.
  - Hydraulic fluid within the engineered, closed-loop, containment systems.
  - Combustible components associated with a forklift.

- The Class 2 laser scanning head on the WCATS mobile device can cause eye injury if eye is exposed to the beam. Do <u>not</u> allow eyes of user or observers to become exposed to laser beam.

- The WCATS mobile device contains a lithium-ion battery. Exposure to extreme temperatures (greater than 140 °F) may cause battery to explode. Do <u>not</u> store the WCATS mobile device where temperatures may exceed 140 °F. Keep mobile device out of direct sunlight for extended periods of time when <u>not</u> in use. Do <u>not</u> incinerate, mutilate, short circuit, or disassemble the battery pack. Do <u>not</u> dispose of in municipal waste receptacles. Dispose of in properly marked universal waste disposal areas.

4. PREREQUISITES ACTIONS

NOTE *The listed prerequisite actions may be completed in any order.*

4.1 Planning and Coordination

Supervisor or designee

[1] **ENSURE** that this procedure is the latest revision, and **IDENTIFY** this document as Working Copy or Information Only on the Title Page.

[2] **ENSURE** that the performance of this procedure has been scheduled on the WCRRF schedule.

[3] **ENSURE** that an RWP for the planned activity has been issued.

[4] **ENSURE** that a pre-job briefing is conducted for all personnel involved in the performance of this procedure, in accordance with EP-DIV-AP-0112, EWMO Pre-Job Briefings, and that the pre-job briefing included weather conditions, communication requirements, hazards/controls and emergency response actions.

[5] **ENSURE** that, as a minimum, the following personnel trained in the use of this procedure are available for performance of this procedure, as required:

- Two Radiological Control Technician (RCT)
- Four Waste Handling Technician
- One Supervisor (e.g., Shift Operations Supervisor or Person-In-Charge)
- One Central Characterization Project (CCP) representative [Visual Examination (VE) only]
- **($)** STATIONARY FIRE WATCH (greater than 300 PE-Ci equivalent combustible waste only) (SAC 5.10.1.7.2)

4.1 Planning and Coordination (continued)

[6] **IF** performing Section 10, WCG Waste Processing,
THEN:

[A] **ENSURE** that the waste containers to be processed have been evaluated in accordance with EP-DIV-AP-20098, LTP TRU Waste Remediation Safety Evaluation, and that a copy of the LTP Waste Remediation Safety Evaluation Data Sheet (EP-DIV-AP-20098 Attachment 1) has been obtained for each waste container to be processed.

[B] **INITIATE** a copy of Attachment 1, WCRRF WCG Waste Processing Data Sheet for each waste container to be processed, and **DOCUMENT** the following information:

- Parent Waste Container Number (record on each page of Attachment 1)
- Processing activity to be performed in accordance with EP-DIV-AP-20098 (i.e., > 190 mrem/hr, PID, Split, or Repack)
- Prohibited Items, if present
- Parent waste container RCRA Designations

[C] **ATTACH** a copy of the LTP Waste Remediation Safety Evaluation Data Sheet (EP-DIV-AP-20098 Attachment 1) to Attachment 1.

[7] **DETERMINE** the hazard classification of the activity to be performed using the following Anticipated Extremity Radiation Dose Rate criteria, and **CHECK** (√) the applicable box on Attachment 1:

- Moderate Hazard - ≤ 10 rem/hr
- High/Complex Hazard - > 10 rem/hr

[8] **OBTAIN** a blank Administrative Control Lock Log Sheet form 10.4 of EP-DIV-AP-0117, lock, and key from the WCRRF Operations Center. (e.g., See Appendix 6, Administrative Control Lock Log Sheet)

[9] **ENSURE** that the TRU daughter waste container labels (e.g., Shorty barcode labels) have been obtained from the Waste Help Team (wastehelp@lanl.gov).

4.2 Materials and Equipment

4.2.1 Special Tools and Equipment

NOTE *The list of special tools and equipment is not an all inclusive list and additional tools and equipment may be used as necessary.*

Waste Handling Technician or Supervision

[1] **ENSURE** that the following special tools and equipment are available, as required:

- Safety glasses with side shields
- Permanent marker
- Cut resistant (e.g., HexArmor™, leather, or leather palm mechanics) gloves
- Drum dolly
- Two-wheel dolly
- Portable HEPA-filter exhaust system
- Cutting tool (e.g., utility knife or PVC cutter)
- WCG metal bucket
- Tools for separating and processing waste
- Non-sparking tools for separating and processing waste
- Banding tool
- ML-2 drum lift hinge pin retaining clips (e.g., E-clips)
- Removable lead glass windows
- Lead blankets
- WCATS mobile device

4.2.2 Consumables

NOTE *The list of consumables is not an all inclusive list and additional consumables may be used as necessary.*

Waste Handling Technician or Supervision

[1] **ENSURE** that the following consumables are available, as required:

- Bag-off bags (filtered or unfiltered)
- Tape (duct or vinyl)
- Binding ties
- Nitrile gloves
- Plastic waste bags
- Drum labels
- Chemwipes or equivalent
- Wire rope inspection cloth (e.g., cheese cloth)

4.2.2 Consumables (continued)

- Fantastik or equivalent
- Banding material
- Banding buckles
- Kitty Litter/Zeolite® absorbent
- 3 Liters Carbon Spheroids or MET-L-X
- Litmus paper
- Lead or lead equivalent WCG gloves
- Velcro®

4.2.3 Measurement and Test Equipment (M&TE)

Waste Handling Technician or Supervision

[1] **ENSURE** that the following measuring and test equipment are available, as required:
- Platform scale
- WCG scale

4.3 Field Preparation

Waste Handling Technician or Supervision

[1] **($) IF** performing any section except Section 8.1, Bag On Daughter Drum, Bagport, or Gloveport, without bagging in waste material,
THEN ENSURE that Building TA-50-69 is in the OPERATION MODE in accordance with EP-WCRR-FO-DOP-0201, WCRRF and Building TA-50-69 TSR Mode Change, and **CHECK** (√) OPERATIONS on Attachment 1, WCRRF WCG Waste Processing Data Sheet. (TSR 1.2)

[2] **($) IF** performing Section 8.1,
AND waste material is **NOT** being introduced into the WCG,
THEN ENSURE that Building TA-50-69 is in the OPERATION or WARM STANDBY MODE in accordance with EP-WCRR-FO-DOP-0201, and **CHECK** (√) WARM STANDBY on Attachment 1. (TSR 1.2)

[3] **ENSURE** that the WCRRF Operations Center has authorized the performance of this procedure.

4.3 Field Preparation (continued)

[4] **IF** performing one of the following sections:
Section 5, Parent Waste Container Preparation,
Section 6, WCG Parent Drum Loading/Unloading,
Section 10, WCG Waste Processing,
THEN:

[A] **ENSURE** that the weekly Platform Scale calibration verification has been performed in accordance with EP-WCRR-WO-DOP-0239, Verifying WCRRF Scales.

[B] **RECORD** the platform scale serial number and calibration due date on Attachment 1.

[C] **IF** the platform scale exceeds the calibration due date,
THEN NOTIFY the WCRRF Operations Center of the discrepancy, and
REQUEST the applicable actions.

[5] **IF** performing Section 10,
THEN:

[A] **ENSURE** that preprinted Item ID Number labels and PCB Item Number labels are obtained from the Waste Management Coordinator.

[B] **($) VERIFY** that WCG contains three 1-Liter containers of carbon spheroids or MET-L-X, and **CHECK** (√) YES or NO on Attachment 1. (SAC 5.10.1.7.1)

[C] **ENSURE** that the required number of daughter drums have been prepared in accordance with EP-WCRR-WO-DOP-0221, Preparing and Closing 55-gal Daughter Drum Assemblies.

[D] **REVIEW** Appendix 2, WCRRF Allowable Container Types For Remediation.

[E] **ENSURE** that Prohibited Item Collection Containers (aerosol and pressurized cylinders) <u>or</u> previously initiated Prohibited Item Collection Containers are available, as necessary, and that the Prohibited Item Collection Containers (Holdup Container) have been generated in WCATS and have been labeled.

4.3 Field Preparation (continued)

NOTE *The daughter waste containers (e.g., 55-gal drums) may be prepared in advance of the waste container remediation activity and at a location other than the processing area. As such, the lids may be temporarily placed on the daughter waste containers to allow them to be safely transported to the processing area.*

[F] **ENSURE** that a sufficient number of daughter waste containers (e.g., 55-gal drums) are available, as necessary.

[6] **($) IF** performing Section 10,
AND the parent container TRU-waste material inventory value is greater than 300 PE-Ci equivalent combustible waste,
THEN ENSURE a STATIONARY FIRE WATCH has been established, and
DOCUMENT (Initial and Date) on Attachment 1. (SAC 5.10.1.7.2)

NOTE *The Technical Safety Requirements for WCRRF specify that a critical lift plan is required for lifts and forklift movements involving DEGRADED or LOSS OF INTEGRITY drums. Additionally a critical lift plan is required in accordance with the requirements of P101-25, Cranes, Hoists, Lifting Devices, and Rigging Equipment, such as when the weight of the parent drum is greater than 75% of the WCG drum lift rated capacity (624 lb x .75 = 468 lb).*

[7] **IF** performing Section 6,
THEN:

[A] **DETERMINE** whether the parent drum is a degraded or loss of integrity drum, or whether the parent drum weight is greater than 468 lb but less than or equal to 624 lb, and **CHECK** (√) YES or NO on Attachment 1.

4.3 Field Preparation (continued)

NOTE *The Person-in-Charge (PIC) appointed for the safe handling of critical loads and for the safe handling of non-critical items in, around, or above spaces in which critical items are located **SHALL** be trained as a qualified crane operator and rigger.*

[B] **($) IF** the parent drum is a degraded or loss of integrity drum, (AC 5.10.3.1) **OR** the parent drum weight is greater than 468 lb but less than or equal to 624 lb, **THEN:**

[a] **IDENTIFY** and **RECORD** the name of the person who will serve as the Qualified Crane Operator and Rigger PIC for lifting and forklift movements of degraded or loss of integrity drums on Attachment 2, WCRRF WCG Critical Lift Plan Concurrence Sheet.

[b] **ENSURE** that the Qualified Crane Operator and Rigger PIC performs a pre-job briefing that includes a review of Appendix 1, Waste Drum Critical Lift Plan, and **DOCUMENT** the review on Attachment 2.

WARNING

1. **Performance of a pre-operational inspection of the WCG drum lift (Form 1489), SHALL ensure that the entire length of the drum lift cable is inspected. This will require that the drum lift be exercised from the full up to the full down positions.**

2. **The drum lift pendant operator is to announce operation of the lift before raising or lowering the drum and all personnel are to stand clear and to the side of drum movement in order to prevent personnel injuries.**

NOTE *The inspection criteria identified as N/A on Appendix 3, Example Preoperational Inspection record for Overhead Cranes and Hoists, are <u>not</u> required to be performed.*

[C] **IF** performing Section 6 for the first time for the day, **THEN PERFORM** a pre-operational inspection of the WCG drum lift components in accordance with P101-25 by completing the applicable sections of Form 1489.

4.3 Field Preparation (continued)

[8] **IF** performing WCG operations (e.g., Section 10, WCG Waste Processing),
THEN:

[A] **DETERMINE** whether the WCG glove change due date marked on each WCG gloves has been exceeded.

[B] **IF** the WCG glove change due date marked on the WCG glove has been exceeded, **OR** a WCG glove or bag-in/bag-out bag fails the inspection,
THEN:

[a] **STOP** operations.

[b] **IDENTIFY** the WCG glove or bag-in/bag-out bag as out-of-service.

[c] **NOTIFY** supervision and an RCT for the applicable actions in accordance with EP-DIV-AP-20047.

NOTE *WCG gloves with a glove change due date that has been exceeded are <u>not</u> required to be inspected in accordance with the following step.*

[C] **INSPECT** the internal and external surfaces of each WCG glove and bag-in/bag-out bag for the following:

- Layer separations
- Cuts
- Natural degradation
- Cracks
- Stiffness
- Punctures
- Splits
- Obvious physical signs of deterioration
- Discoloration
- Surface deposits/debris
- Radiological contamination (internal only)
- Exposed color of the lead liner, if present

[D] **CHECK** (√) SAT or UNSAT on Attachment 1, and **DOCUMENT** the completion of the WCG glove inspection by signing and dating on Attachment 1.

4.3 Field Preparation (continued)

[9] **ENSURE** that glovebox inspections have been completed in accordance with EP-DIV-AP-20047.

[10] **IF** Section 10.4, Waste Splitting Activities, is to be performed,
THEN ENSURE that Low-Level Waste Characterization personnel are available, as necessary.

[11] **IF** this procedure is being performed as a High/Complex Hazard activity as determined in Section 4.1, Planning and Coordination,
THEN:

[A] **ENSURE** that the temporary lead glass windows have been attached (e.g., Velcro®) to the inside of the applicable WCG windows.

[B] **ENSURE** that lead or lead equivalent gloves have been installed on the WCG gloveports.

[C] **ENSURE** that lead blankets have been placed along the bottom of the WCG.

NOTE 1 *The following step may be performed out of sequence and may be performed in Building TA-50-37 (Artic).*

NOTE 2 *The TRU DRUM PREPARATION task on the WCATS mobile device may be performed in conjunction with the performance of the physical build of a POC.*

[12] **IF** a POC is to be used,
AND the POC is to be bagged onto the WCG,
THEN:

[A] **OBTAIN** a POC bag-on bag.

[B] **APPLY** vinyl tape to the POC bag-on bag, with a smear pad centered on the tape, over the filter.

[C] **INFLATE** the POC bag-on bag with air from a compressed air source.

[D] **INSPECT** the POC bag-on bag for damage, cuts, or leaks by looking, listening, and feeling.

4.3 Field Preparation (continued)

[E] **STRETCH** the POC bag-on bag's bungee cord, and **INSPECT** the bungee cord for cuts or damage.

[F] **IF** the POC bag-on bag or bungee cord fails the inspection,
THEN:

[a] **IDENTIFY** (e.g., tag or mark) the failed item indicating that item is defective.

[b] **SEGREGATE** the failed item in order to prevent the item from being used.

NOTE 1 *A Quality Assurance (QA) representative may be contacted for assistance with the NCR process.*

NOTE 2 *The NCR may be initiated at an operationally convenient time.*

[c] **ENSURE** that an NCR is initiated in accordance with P330-6, Nonconformance Reporting, as required.

[d] **REPLACE** the defective item.

[e] **GO** to Step 4.3[12][A].

NOTE *The following step may be performed out of sequence to allow for the bulk inspection of liners in order to improve operational efficiencies.*

[G] **OBTAIN** and **VISUALLY INSPECT** a POC plastic/cardboard liner ensuring the exterior surfaces are smooth.

[H] **IF** POC plastic/cardboard liner fails the inspection,
THEN:

[a] **IDENTIFY** (e.g., tag or mark) the POC plastic/cardboard liner indicating that the POC plastic/cardboard liner is defective.

[b] **SEGREGATE** the POC plastic/cardboard liner in order to prevent the item from being used.

4.3 Field Preparation (continued)

NOTE 1 *A Quality Assurance (QA) representative may be contacted for assistance with the NCR process.*

NOTE 2 *The NCR may be initiated at an operationally convenient time.*

[c] **ENSURE** that an NCR is initiated in accordance with P330-6, Nonconformance Reporting, as required.

[d] **REPLACE** the POC plastic/cardboard liner.

[e] **GO** to Step 4.3[12][G].

[I] **PLACE** the POC plastic/cardboard liner into the POC bag-on bag.

[J] **PLACE** the POC plastic/cardboard liner and bag into the POC pipe component.

[K] **ENSURE** that excess POC bag-on bag is placed inside of the POC pipe component.

[L] **PLACE** the POC pipe component lid on the POC pipe component and **TIGHTEN** the lid sufficiently to hold the lid on the POC pipe component.

[M] **PLACE** the POC drum lid on the POC drum and **TIGHTEN** the closure ring bolt sufficiently to hold the drum lid in place.

[13] **ENSURE** that the new daughter waste containers (e.g., POCs and 55-gal drums) have been created in WCATS using the TRU DRUM PREPARATION application and that the Shorty barcode labels have been applied to the new daughter waste containers (e.g., POCs and 55-gal drums) in accordance with EP-DIV-DOP-20043, LTP TRU Waste Container Labeling.

5. PERFORMANCE—PARENT WASTE CONTAINER PREPARATION

This section is a stand-alone section and may be performed independently of or in conjunction with other Performance sections.

NOTE *Radiological surveys may be performed as determined necessary [e.g., by an RP representative (e.g., RCT)] anytime during the performance of this procedure.*

Waste Handling Technician

[1] **ENSURE** that the prerequisite actions have been completed.

NOTE *Steps 5.[2] through 5.[4] may be performed in Building TA-50-37 (Artic).*

[2] **OBTAIN** an unfiltered bag-off bag or a filtered bag-off bag, and **TAPE OVER** the inside and outside filter openings of a filtered bag-off bag, as applicable.

CAUTION

Care should be exercised when not to over inflate the filtered bag. Apply only enough air to inspect for leaks. (pins holes, leakage around filter attachment points.). Failure to comply with this caution could lead to overstressing the filter and possible pre-damage to the filtered bag.

[3] **INFLATE** the filtered or no filtered bagout bag carefully and slowly while sealing the bag (i.e. securing opening with hand).

[4] **INSPECT** the bag-off bag for damage or cuts examining by sight, sound, and feel.

[5] **IF** the bag-off bag does **NOT** hold the air,
THEN:

[A] **IDENTIFY** (e.g., tag or mark) the bag-off bag indicating that the bag-off bag is defective.

[B] **SEGREGATE** the bag-off bag in order to prevent the item from being used.

NOTE *The NCR may be initiated at a time that is operationally convenient.*

[C] **ENSURE** that an NCR is initiated in accordance with P330-6, Nonconformance Reporting.

[D] **GO** to Step 5.[2].

5. PERFORMANCE—PARENT WASTE CONTAINER PREPARATION (continued)

[6] **TAPE** the drum closure ring bolt in order to prevent tearing or cutting the unfiltered bag-on bag.

[7] **IF** the drum to be processed is **NOT** a degraded or loss of integrity drum, **THEN CUT** off the bottom of a bag-off bag approximately 27 to 30 inches from the bottom of the bag-off bag in order to create a bag-off sleeve.

[8] **SLIDE** the bag-off bag over the top of the drum down to between the second and third rolling hoops (from the top) ensuring that the first and second rolling hoops (from the top) are covered.

NOTE *Enough room must be left between the tape and the drum closure ring bolt in order for the drum closure ring to be removed without damaging the bag-on bag.*

[9] **WRAP** tape (vinyl or duct) around the container so that the bag-off bag is tightly bound approximately halfway between the second and third rolling hoops near the top of the drum and overlapping the bag-off bag onto the drum.

[10] **ENSURE** that the drum wrapping (e.g., tape and bag-off bag) is airtight and no air pockets are present.

[11] **WRAP** duct tape around the drum just below the top rolling hoop.

CAUTION

Improper placement of the banding material over the drum hoop may result in movement and banding material slipping down the drum. Do <u>not</u> place banding material over drum hoop.

[12] **PLACE** banding material around the drum over the installed duct tape and **ENSURE** banding material is <u>not</u> placed over the drum hoop.

[13] **TIGHTEN** and **BUCKLE** the banding material with a banding tool.

[14] **COVER** the banding buckle with duct tape to prevent bag tears.

[15] **ROLL DOWN** the remaining bag-off bag around drum.

5. PERFORMANCE—PARENT WASTE CONTAINER PREPARATION (continued)

NOTE *The following two steps may be performed just before loading the drum on the WCG drum lift.*

[16] **IF** items (e.g., gloves or tools) are to be bagged into the WCG with the Prepared Parent Drum,
THEN SECURE the items to the top of the Prepared Parent Drum.

[17] **WEIGH** the Prepared Parent Drum with items secured to the drum top, as applicable, and **RECORD** the Prepared Parent Drum Weight on Attachment 1.

[18] **IF** the Prepared Parent Drum Weight is greater than or equal to 624 lb,
THEN:

[A] **STOP** the work activity.

NOTE *The WCRRF Operations Center notifies the Transuranic (TRU) Waste Disposition Project (WDP) Operations Manager (OM) or designee and the Shift Operations Supervisor (SOS) of the discrepancy.*

[B] **NOTIFY** the WCRRF Operations Center of the discrepancy.

[C] **REQUEST** the applicable actions from the SOS or designee.

[19] **RECORD** the following information on the parent drum lid using a permanent marker:
- Parent drum number
- Parent drum weight
- Date
- Platform scale serial number
- Platform scale calibration due date

6. PERFORMANCE—WCG PARENT DRUM LOADING/UNLOADING

NOTE *Radiological surveys may be performed as determined necessary [e.g., by an RP representative (e.g., RCT)] anytime during the performance of this procedure.*

6.1 WCG Drum Lift Daily Inspection

This sub-section is a stand-alone sub-section and may be performed independently of or in conjunction with other sub-sections.

This inspection is to be performed once each work day before the WCG drum lift is to be used to hoist a waste drum.

NOTE *The individual performing the WCG drum lift inspection **SHALL** be at a minimum a certified Qualified Crane Operator.*

Waste Handling Technician

[1] **OBTAIN** and **REVIEW** the previously completed copy of Attachment 3, WCRRF WCG Drum Lift Inspection Data Sheet.

[2] **OBTAIN** a new copy of attachment 3, and **RECORD** the inspection date on Attachment 3.

[3] **RECORD** any previously identified wire rope damage in Table 3-1 or Table 3-2, or N/A as applicable, on Attachment 3, and **CHECK** (√) applicable box in the Previously Identified Damage column in Table 3-1 or Table 3-2, as applicable, on Attachment 3.

[4] **RECORD** the number of threads exposed out the end of the shaft bolt locknut on the upper, middle, and lower pulley shaft bolts from the previous inspection on Attachment 3.

6.1 WCG Drum Lift Daily Inspection (continued)

[5] **DETERMINE** and **RECORD** on Attachment 3 the current number of threads exposed out the end of the shaft bolt locknut on the upper, middle, and lower pulley shaft bolts (see illustration below).

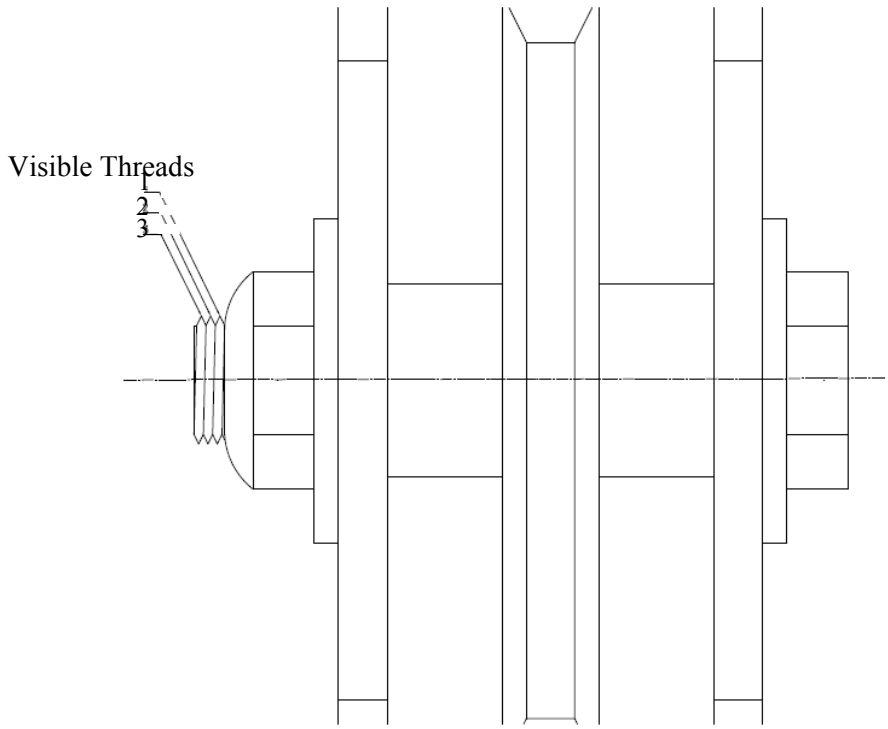

[6] **DETERMINE** whether the shaft bolt end is flush with or extends out of the outer end of the shaft bolt locknut, and **CHECK** (√) YES or NO on Attachment 3.

[7] **INSPECT** the upper, middle, and lower pulley shaft bolts for any signs of wear between the shaft bolt and the support flanges (e.g., shaft not perpendicular to the flange plate), and **CHECK** (√) SAT or UNSAT for each shaft bolt on Attachment 3.

WARNING

The drum lift pendant operator is to announce operation of the lift before raising or lowering the drum and all personnel are to stand clear and to the side of drum movement in order to prevent personnel injuries.

[8] **ENSURE** that the drum trolley is in the full-down position.

6.1 WCG Drum Lift Daily Inspection (continued)

WARNING

Cut resistant (e.g., leather or leather palm mechanics) gloves are to be worn while inspecting the drum trolley wire rope and the cloth is to be held loosely in order to prevent skin punctures resulting from broken wires of the wire rope.

[9] **INSPECT** the entire length of the exposed, upper wire rope from the top of the drum trolley to the wire rope hoist drum by loosely gripping the cloth (e.g., cheese cloth) while sliding the cloth along the length of the wire rope, and **CHECK** (√) YES or NO to indicate whether any new damage is identified on Attachment 3 to indicate whether any upper wire rope damage is discovered.

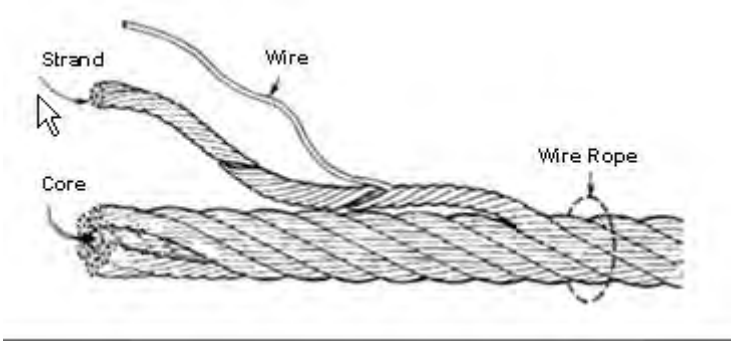

[10] **IF** the cloth snags on the wire rope,
THEN VISUALLY INSPECT the wire rope snag location for damage, and
DOCUMENT the results of the inspection including the location of the damage in Table 3-1, Upper Wire Rope Damage, on Attachment 3.

WARNING

The drum lift pendant operator is to announce operation of the lift before raising or lowering the lift and all personnel are to stand clear and to the side of drum movement in order to prevent personnel injuries.

[11] **ENSURE** that the drum trolley is in the full-up position.

6.1 WCG Drum Lift Daily Inspection (continued)

WARNING

Cut resistant (e.g., leather or leather palm mechanics) gloves are to be worn while inspecting the drum trolley wire rope and the cloth is to be held loosely in order to prevent skin punctures resulting from broken wires of the wire rope.

[12] **INSPECT** the entire length of the exposed, lower wire rope from the top of the drum trolley to the wire rope hoist by loosely gripping the cloth (e.g., cheese cloth) while sliding the cloth along the length of the wire rope, and **CHECK** (√) YES or NO to indicate whether any new damage is identified on Attachment 3 to indicate whether any lower wire rope damage is discovered.

[13] **IF** the cloth snags on the wire rope,
THEN VISUALLY INSPECT the wire rope snag location for damage, and **DOCUMENT** the results of the inspection including the location of the damage in Table 3-2, Lower Wire Rope Damage, on Attachment 3.

[14] **IF** there is more than <u>one</u> wire break within a 2-in. span along the wire rope,
THEN:

[A] **CHECK** (√) UNSAT for the wire rope inspection on Attachment 3.

[B] **GO** to Step 6.1[16].

[15] **CHECK** (√) SAT for the wire rope inspection on Attachment 3.

[16] **IF** UNSAT was checked (√) for any of the WCG inspections,
THEN:

[A] **STOP** the work activity.

[B] **SIGN** and **DATE** on Attachment 3.

NOTE *The WCRRF Operations Center notifies the WDP SOM or designee and the Cognizant System Engineer (CSE) of the discrepancy.*

[C] **NOTIFY** the WCRRF Operations Center of the discrepancy.

[D] **DOCUMENT** the notifications and discrepancies in the Comments section of Attachment 3.

6.2 Parent Drum Loading

This sub-section is a stand-alone sub-section and may be performed independently of or in conjunction with other sub-sections.

Waste Handling Technician

[1] **ENSURE** that the prerequisite actions have been completed.

RCT

[2] **PERFORM** radiological surveys as necessary during the waste container handling evolutions.

Waste Handling Technician

[3] **IF** radiological contamination is detected,
THEN FOLLOW the instructions of the RCT and RWP.

[4] **RECORD** the Processing Date (current date) on Attachment 1, WCRRF WCG Waste Processing Data Sheet.

[5] **IF** lead blankets are to be used as radiological shielding on the parent drum,
THEN:

[A] **WEIGH** the lead blankets, as necessary, and **RECORD** the lead blanket's weight on Attachment 1.

[B] **SUM** the Lead Blanket Weights and the Prepared Parent Drum Weight, and **RECORD** the Total Prepared Parent Drum Weight (drum and lead blankets) on Attachment 1.

[C] **GO** to Step 6.2[7].

[6] **RECORD** the Total Prepared Parent Drum Weight (parent drum weight) on Attachment 1.

[7] **($) DETERMINE** whether the Total Parent Drum Weight is less than 624 lb, and **CHECK** (√) SAT or UNSAT for the Total Parent Drum weighing less than 624 lb on Attachment 1. (SR 4.5.1)

6.2 Parent Drum Loading (continued)

[8] **IF** the Total Parent Drum Weight is greater than or equal to 624 lb,
THEN:

[A] **STOP** the work activity.

NOTE *The WCRRF Operations Center notifies the TRU WDP OM or designee and the SOS of the drum status.*

[B] **NOTIFY** the WCRRF Operations Center, of the drum status.

[C] **REQUEST** the applicable actions from the SOS or designee.

NOTE *P101-25 and Appendix 1, Waste Drum Critical Lift Plan, provide instructions for a drum critical lift.*

[9] **($) IF** the prepared parent drum is a degraded or loss of integrity drum, (AC 5.10.3.1)
OR the parent drum weight is greater than 468 lb,
THEN ENSURE that the prepared parent drum is loaded in compliance with Appendix 1 and this sub-section.

[10] **ENSURE** that the drum lift key has been obtained from the key box.

[11] **ENSURE** that the drum lift key has been inserted, and has been turned to ON in order to establish power to the drum lift.

[12] **ENSURE** that the drum lift has been lowered to the lower limit switch or until the bellyband of the lift cradle can grasp the drum evenly using the drum lift pendent.

[13] **IF** the WCG parent drum port cover is present,
THEN REMOVE the WCG parent drum port cover, and **SET** the WCG parent drum port cover aside.

[14] **ENSURE** that respiratory protection is worn as required by the applicable RWP.

[15] **LOOSEN** the drum closure ring bolt jam nut, as necessary, <u>without loosening the closure ring bolt</u>.

6.2 Parent Drum Loading (continued)

NOTE *The retaining clip (e.g., E-clip) must be an ML-2 component.*

[16] **INSPECT** the four drum lift hinge pins to determine whether all hinge pins have retaining clips (e.g., E-clips) attached to the bottom of the hinge pins.

[17] **IF** a retaining clip is missing from a hinge pin,
THEN:

[A] **INSPECT** the hinge pin for damage and **DOCUMENT** deficiencies including hinge pin location in the Comments section of Attachment 1.

[B] **IF** the hinge pin is damaged or the hinge pin does **NOT** completely pass through the hinge,
THEN:

[a] **STOP** the work activity.

[b] **NOTIFY** the WCRRF Operations Center of the hinge pin status.

[c] **REQUEST** the applicable actions from the SOS or designee, and **DOCUMENT** the condition and actions taken in the Comments section of Attachment 1.

[C] **ATTACH** a retaining clip to the hinge pin, ensuring that the clip is properly seated in the groove at the bottom of the hinge pin.

[D] **DOCUMENT** initials, Z number, and date on Attachment 1 to indicate that the retaining clip was replaced.

[18] **POSITION** the prepared parent drum on the drum lift with the prepared parent drum closure ring bolt accessible for lid removal when the drum closure ring is inside of the WCG.

[19] **CLOSE** and **SECURE** the bellyband on the prepared parent drum, ensuring that the bag-off sleeve does <u>not</u> get caught on the bellyband.

[20] **ENSURE** that the retaining clips are properly seated in the groove at the bottom of the hinge pins.

6.2 Parent Drum Loading (continued)

WARNING

Failure to ensure the Trolley Clamp is positioned next to the WCG prior to lowering or raising the drum lift could lead to equipment damage and personnel injury.

[21] **IF** the Trolley Rail clamp is to be used,
AND is not on the drum rail,
THEN PLACE the trolley rail clamp on the rail and **POSITION** next to the WCG.

[22] **RAISE** the prepared parent drum to the WCG parent drum port using the drum lift pendent, leaving an adequate gap (approximately 12 in.) to attach the bag-off sleeve to the WCG parent drum port.

[23] **BAG ON** the prepared parent drum to the WCG parent drum port in accordance with section 7.1, Parent Drum Bag On, and **RETURN** to the following step.

WARNING

Downward movement of the parent drum could result in the drum bag-off bag separating from the WCG drum port and resulting in the spread of radiological contamination.

[24] **TURN** the drum lift key to OFF, and **REMOVE** the drum lift key, as applicable.

[25] **PLACE** the drum lift key in the key box, as applicable.

6.2 Parent Drum Loading (continued)

[26] **IF** the parent drum is to remain attached to the WCG overnight,
THEN OBTAIN the Environmental and Waste Management Facility Operations-Facility Operations Director (EWMO-FOD) approval to leave the parent drum attached to the WCG overnight, and **DOCUMENT** the approval on Attachment 1.

[27] **IF** the EWMO-FOD does **NOT** approve leaving a parent drum attached to the WCG overnight,
THEN ENSURE that the parent drum is removed before the end of the work day.

[28] **PROCESS** the waste in the parent drum in accordance with Section 10, WCG Waste Processing.

6.3 Parent Drum Unloading

This sub-section is a stand-alone sub-section and may be performed independently of or in conjunction with other sub-sections.

Waste Handling Technician

[1] **ENSURE** that the prerequisite actions have been completed.

[2] **ENSURE** that the parent drum has been bagged off of the WCG in accordance with Section 7.2, Parent Drum Bag Off.

RCT

[3] **PERFORM** radiological surveys as necessary during the waste container handling evolutions.

Waste Handling Technician

[4] **IF** radiological contamination is detected,
THEN FOLLOW the instructions of the RCT and RWP.

[5] **ENSURE** that the drum lift key has been obtained from the key box.

[6] **ENSURE** that the drum lift key has been inserted, and **TURN** the drum lift key to ON in order to establish power to the drum lift.

6.3 Parent Drum Unloading (continued)

WARNING

The drum lift pendant operator is to announce operation of the lift before raising or lowering the drum and all personnel are to stand clear and to the side of drum movement in order to prevent personnel injuries.

[7] **POSITION** a drum dolly to receive the parent drum.

WARNING

Personnel SHALL <u>not</u> place any portion of the body (e.g., hands or arms) under an elevated load in order to prevent serious personal injury.

[8] **LOWER** the parent drum down onto the drum dolly using the drum lift pendent.

[9] **OPEN** the drum bellyband, and **UNLOAD** the parent drum from the drum lift.

[10] **IF** no additional drums are to be loaded with the WCG drum lift,
THEN:

[A] **SECURE** the drum bellyband.

[B] **RAISE** the drum lift to the desired height for stowing using the drum lift pendent.

[C] **TURN** the drum lift key to OFF, and **REMOVE** the drum lift key.

[D] **PLACE** the drum lift key in the key box.

[11] **TAPE** the bagged off parent drum horsetail using vinyl tape.

[12] **PLACE** a layer of containment (e.g., the cutoff end of the parent drum bagged off bag or piece of plastic) over the drum lid.

[13] **TAPE** the entire parent drum lid using vinyl tape.

6.3 Parent Drum Unloading (continued)

NOTE 1 *The RCRA Hazardous Waste Codes of a parent container do not apply to the empty parent container or the empty parent container label when the empty parent container satisfies the RCRA definition of an empty container in 40 CFR 261.7, Residues of Hazardous Waste in Empty Containers.* *http://edocket.access.gpo.gov/cfr_2009/julqtr/pdf/40cfr261.7.pdf.*

NOTE 2 *The following steps may be performed at a time that is operationally convenient.*

[14] **OVERPACK** the empty parent drum in accordance with EP-WCRR-WO-DOP-0236, WCRRF Loading/Unloading SWB or 85-gal Drum.

[15] **MOVE** the empty parent drum to a transportainer in accordance with EP-WCRR-WO-DOP-0202, WCRRF and Building TA-50-69 Waste Container Receipt, Movement, and Transfer.

[16] **ENSURE** that the Inventory Control Personnel have been notified that the empty parent drum has been removed from Building TA-50-69.

7. PERFORMANCE—WCG PARENT DRUM BAG-ON/BAG-OFF OPERATIONS

NOTE *Radiological surveys may be performed as determined necessary [e.g., by an RP representative (e.g., RCT)] anytime during the performance of this procedure.*

7.1 Parent Drum Bag On

This sub-section is a stand-alone sub-section and may be performed independently of or in conjunction with other sub-sections.

Waste Handling Technician

[1] **ENSURE** that the prerequisite actions have been completed.

[2] **WEAR** respiratory protection as required by the applicable RWP.

RCT

[3] **PERFORM** radiological surveys as necessary during the waste container handling evolutions.

Waste Handling Technician

[4] **IF** radiological contamination is detected,
THEN FOLLOW the instructions of the RCT and RWP.

[5] **ENSURE** the parent drum has been loaded onto the WCG in accordance with Section 6.2, Parent Drum Loading.

[6] **ENSURE** that the WCG has been wiped down to reduce radiological contamination.

[7] **SET UP** a portable HEPA-filter exhaust system (MAC-21) in order to increase local airflow at the site of the horsetail during the cutting operation.

[8] **REMOVE** the retaining band from the WCG parent drum port bag-off stub.

[9] **VISUALLY INSPECT** the WCG parent drum port bag-off stub for damage (e.g., tears).

[10] **IF** the WCG parent drum port bag-off stub is damaged (e.g., tears),
THEN:

[A] **REPAIR** the damage (e.g., tears) using vinyl tape.

[B] **REQUEST** an RCT survey for radiological contamination.

7.1 Parent Drum Bag On (continued)

[C] **IF** radiological contamination is detected,
THEN FOLLOW the instructions of the RCT and RWP.

[11] **SLIDE** the bag-off stub down to the outer ring of the WCG parent drum port.

[12] **SWIPE** around the WCG parent drum port with a maslin smear, and **REQUEST** an RCT monitor the swipe for radiological contamination.

[13] **IF** radiological contamination is detected,
THEN FOLLOW the instructions of the RCT and RWP.

NOTE *The new bag-on bag is attached to the parent drum.*

[14] **SLIDE** the new bag-on bag over the old bag-on bag stub to the inner ring of the WCG parent drum port.

[15] **APPLY** vinyl tape to the new bag-on bag where the retaining band buckle is to be placed.

[16] **SECURE** the new bag-on bag with the retaining band.

[17] **REMOVE** the bag-off stub from the WCG parent drum port, and **DROP** the bag-off stub into the glovebox.

WARNING

The drum lift pendant operator is to announce operation of the lift before raising or lowering the drum and all personnel are to stand clear and to the side of drum movement in order to prevent personnel injuries.

[18] **ALTERNATELY RAISE** the parent drum and **GUIDE** the bag-on bag to prevent damage to the bag-on bag until the parent drum has been raised to the upper limit switch or until the drum is adequately inserted.

7.1 Parent Drum Bag On (continued)

NOTE *The Trolley Rail Clamp is used at the discretion of the PIC, and/or when processing heavy drums to act as a rail stop to restrict forward drum movement when removing heavy items from drum into glovebox.*

[19] **IF** the Trolley Rail Clamp is to be used,
THEN:

[A] **SLIDE** the Trolley Rail Clamp against the drum trolley rail assembly next to the lifting fixture.

[B] **TIGHTEN** the Trolley Rail clamp handle clockwise to secure the clamp against the drum trolley.

7.2 Parent Drum Bag Off

This sub-section is a stand-alone sub-section and may be performed independently of or in conjunction with other sub-sections.

Waste Handling Technician

[1] **ENSURE** that the prerequisite actions have been completed.

[2] **WEAR** respiratory protection as required by the applicable RWP.

RCT

[3] **PERFORM** radiological surveys as necessary during the waste container handling evolutions.

Waste Handling Technician

[4] **IF** radiological contamination is detected,
THEN FOLLOW the instructions of the RCT and RWP.

[5] **IF** Trolley Rail Clamp was used,
THEN LOOSEN handle counterclockwise and **SLIDE** the Trolley Rail Clamp away from the drum trolley (towards the WCG).

[6] **PLACE** the drum lid and drum closure ring bolt are on the parent waste drum.

7.2 Parent Drum Bag Off (continued)

[7] **IF** the parent drum closure ring **CANNOT** be properly attached to the parent drum, **AND** the parent drum is empty,
THEN:

[A] **AFFIX** the closure ring, if possible, to the parent drum and **TAPE** the parent drum lid onto the drum using vinyl tape or equivalent.

[B] **GO** to Step 7.2[11].

NOTE *The removal of a parent drum from the WCG which contains waste material must be performed as a critical lift.*

[8] **IF** the parent drum closure ring **CANNOT** be properly attached to the parent drum, **AND** the parent drum contains waste material,
THEN:

[A] **STOP** the activity and place waste material in a safe configuration (e.g., cover with a fire blanket).

[B] **NOTIFY** supervision and the WCRRF Operations Center of the discrepancy and **REQUEST** the applicable actions.

[9] **ENSURE** that the drum closure ring bolt jam nut is tightened against the non-threaded lug of the drum closure ring.

[10] **ENSURE** that duct tape has been placed on the drum closure ring bolt in order to prevent damage to the bag-off sleeve.

[11] **ENSURE** that the WCG has been wiped down to reduce radiological contamination.

[12] **SET UP** a portable HEPA-filter exhaust system (MAC-21) to increase local airflow at the site of the horsetail during the cutting operation.

[13] **OBTAIN** the drum lift key from the key box, as applicable.

[14] **INSERT** the drum lift key, and **TURN** the drum lift key to ON in order to establish power to the drum lift, as applicable.

7.2 Parent Drum Bag Off (continued)

WARNING

The drum lift pendant operator is to announce operation of the lift before raising or lowering the drum and all personnel are to stand clear and to the side of drum movement in order to prevent personnel injuries.

[15] **LOWER** the parent drum sufficiently to create a horsetail using the drum lift pendent.

[16] **INSPECT** the bag-off bag for damage (e.g., tears).

[17] **IF** bag-off bag is damaged (e.g., tears),
THEN:

[A] **REPAIR** the damage (e.g., tears) using vinyl tape.

[B] **REQUEST** an RCT survey for radiological contamination.

[C] **IF** radiological contamination is detected,
THEN FOLLOW the instructions of the RCT and RWP.

[18] **MIST** inside of the bag-off bag with spray cleaner and **RUB** the bag-off bag together to ensure the complete coverage of the spray cleaner in order to control contamination.

[19] **SQUEEZE** as much air as possible out of the bag-off bag.

[20] **GATHER** the bag-off bag and **COMPRESS** the bag-off bag in order to create a horsetail approximately 8 to 10 in. long.

[21] **TIGHTLY SECURE** the horsetail with vinyl tape or filament tape.

[22] **FIRMLY ATTACH** two binding ties near the center of the horsetail, approximately 6 in. apart.

[23] **IF** bagging off the last parent drum for the work day,
THEN FIRMLY ATTACH a second binding tie approximately 2 in. from the center of the horsetail on the WCG side of the horsetail.

7.2 Parent Drum Bag Off (continued)

NOTE *The excess part of the binding tie protruding through the binding tie latch is not to be cut off.*

[24] **COVER** the attached binding ties with vinyl tape.

Waste Handling Technician Three

[25] **POSITION** the horsetail cutters between the binding ties of the horsetail.

Waste Handling Technician One

[26] **GRASP** the top of horsetail.

Waste Handling Technician Two

[27] **GRASP** the bottom of horsetail.

WARNING

Extremities SHALL not be placed inside the jaws of the cutting tool in order to prevent personnel injury due to pinching.

Waste Handling Technician Three

[28] **CUT** the horsetail between the binding ties.

Waste Handling Technician One and Two

[29] **SIMULTANEOUSLY COVER** the cut stubs of the bag-off bag with vinyl tape.

[30] **ENSURE** that the cut-stubs have been covered with a final layer of vinyl tape, as directed by an RCT.

NOTE 1 *Used cheesecloth are to be disposed of as compactable waste.*

NOTE 2 *The following step may be performed out of sequence.*

Waste Handling Technician Three

[31] **WIPE** down the cutters used to cut the horsetail, place the cutters in a holder, and place the cutters in the designated staging area.

7.2 Parent Drum Bag Off (continued)

NOTE *Used cheesecloth are to be disposed of in the compactable waste container.*

Waste Handling Technician

[32] **DECONTAMINATE**, as necessary, in accordance with RCT instructions.

[33] **REMOVE** the empty parent drum from the WCG drum lifting device in accordance with Section 6.3, Parent Drum Unloading.

8. PERFORMANCE—WCG DAUGHTER DRUM, BAGPORT, OR GLOVEPORT BAG-ON/BAG-OFF OPERATIONS

NOTE *Radiological surveys may be performed as determined necessary [e.g., by an RP representative (e.g., RCT)] anytime during the performance of this procedure.*

8.1 Bag On Daughter Drum, Bagport, or Gloveport

This sub-section is a stand-alone sub-section and may be performed independently of or in conjunction with other sub-sections.

NOTE *This section provides instructions for bagging onto the WCG at a daughter drum port, bagport, or gloveport.*

Waste Handling Technician

[1] **ENSURE** that the prerequisite actions have been completed.

[2] **IF** a daughter drum is to be bagged onto the WCG,
THEN ENSURE that the daughter drum has been prepared in accordance with EP-WCRR-WO-DOP-0221.

[3] **WEAR** respiratory protection as required by the applicable RWP.

RCT

[4] **PERFORM** radiological surveys as necessary during the waste container handling evolutions.

Waste Handling Technician

[5] **IF** radiological contamination is detected,
THEN FOLLOW the instructions of the RCT and RWP.

[6] **ENSURE** that the WCG has been wiped down to reduce radiological contamination.

[7] **IF** directed by an RCT to establish a portable HEPA-filter exhaust system,
THEN SET UP a portable HEPA-filter exhaust system (MAC-21)in order to increase the local airflow at the site of the horsetail during the cutting operation.

[8] **REMOVE** the retaining band from the bag-off stub.

[9] **VISUALLY INSPECT** under the retaining band of the previous drum/bagport/gloveport bag-off stub for damage (e.g., tears).

8.1 Bag On Daughter Drum, Bagport, or Gloveport (continued)

[10] **IF** the previous drum/bagport/gloveport bag-off stub is damaged (e.g., tears),
THEN SEAL the damaged area with vinyl tape.

[11] **SLIDE** the bag-off stub down to the outer ring of the port (drum, bagport, or gloveport).

[12] **SWIPE** around the port with a maslin smear, and **REQUEST** an RCT monitor the swipe for radiological contamination.

[13] **IF** radiological contamination is detected,
THEN FOLLOW the instructions of the RCT and RWP.

[14] **SLIDE** a new bag-on bag over the bag-off stub.

[15] **ADHERE** vinyl tape to the new bag-on bag where the retaining band buckle is to be placed.

[16] **SECURE** the new bag with the retaining band.

[17] **REMOVE** the bag-off bag stub and drop the bag-off bag stub into the daughter drum/bagport bag/gloveport bag, as applicable.

[18] **IF** bagging on a daughter drum,
THEN:

[A] **MOVE** the drum from the drum dolly to the vertical lift table.

[B] **MANUALLY RAISE** the drum to the appropriate height.

8.2 Bag Off Daughter Drum

This sub-section is a stand-alone sub-section and may be performed independently of or in conjunction with other sub-sections.

NOTE *This section provides instructions for bagging off a daughter drum from the WCG.*

Waste Handling Technician

[1] **ENSURE** that the prerequisite actions have been completed.

[2] **WEAR** respiratory protection as required by the applicable RWP.

RCT

[3] **PERFORM** radiological surveys as necessary during the waste container handling evolutions.

Waste Operator

[4] **IF** radiological contamination is detected,
THEN FOLLOW the instructions of the RCT and RWP.

[5] **ENSURE** that the WCG has been wiped down to reduce radiological contamination.

[6] **SET UP** a portable HEPA-filter exhaust system (MAC-21) in order to increase the local airflow at the site of the horsetail during the cutting operation.

[7] **MANUALLY LOWER** the vertical lift table.

[8] **INSPECT** the bag-off bag for damage (e.g., tears).

[9] **IF** the bag-off bag is damaged (e.g., tears),
THEN:

[A] **REPAIR** the damage (e.g., tears) using vinyl tape.

[B] **REQUEST** an RCT survey for radiological contamination.

[C] **IF** radiological contamination is detected,
THEN FOLLOW the instructions of the RCT and RWP.

8.2 Bag Off Daughter Drum (continued)

WARNING

Proper lifting techniques and buddy system SHALL be used when moving a daughter drum from the lift table to the drum dolly in order to prevent personnel injury and to prevent separating the daughter drum bag-off bag from the WCG daughter drum port.

NOTE *A VersaLift may be used to assist the lifting of a drum off of the vertical lift table.*

[10] **MOVE** the drum from the vertical lift table to a drum dolly.

[11] **MIST** inside of the bag-off bag with spray cleaner and **RUB** the bag-off bag together to ensure the complete coverage of the spray cleaner in order to control contamination.

[12] **SQUEEZE** as much air as possible out of the bag-off bag.

[13] **GATHER** the bag-off bag.

[14] **ROTATE** the drum <u>or</u> **COMPRESS** the bag-off bag (as applicable) in order to create a horsetail approximately 8 to 10 in. long.

[15] **TIGHTLY SECURE** the horsetail with vinyl tape or filament tape.

[16] **FIRMLY ATTACH** two binding ties near the center of the horsetail, approximately 6 in. apart.

NOTE *The excess part of the binding tie protruding through the binding tie latch is <u>not</u> to be cut off.*

[17] **COVER** the attached binding ties with vinyl tape.

Waste Handling Technician Three

[18] **POSITION** the horsetail cutters between the binding ties of the horsetail.

Waste Handling Technician One

[19] **GRASP** top of horsetail.

8.2 Bag Off Daughter Drum (continued)

Waste Handling Technician Two

[20] **GRASP** the bottom of the horsetail.

WARNING

Extremities SHALL <u>not</u> be placed inside the jaws of the cutting tool in order to prevent personnel injury due to pinching.

Waste Handling Technician Three

[21] **CUT** the horsetail between the binding ties.

Waste Handling Technician One and Two

[22] **SIMULTANEOUSLY COVER** the cut stubs of the bag-off bag with vinyl tape.

[23] **ENSURE** that the cut-stubs have been covered with a final layer of vinyl tape, as directed by an RCT.

NOTE 1 *Used cheesecloth **SHALL** be disposed of as compactable waste.*

NOTE 2 *The following step may be performed out of sequence.*

Waste Handling Technician Three

[24] **WIPE** down the cutters used to cut the horsetail, place the cutters in a holder, and place the cutters in the designated staging area.

Waste Handling Technician

[25] **IF** the bag-off bag has a filter that is covered with tape,
THEN:

[A] **REMOVE** the tape from bag filter.

[B] **REQUEST** an RCT survey for radiological contamination.

[C] **IF** radiological contamination is detected,
THEN FOLLOW the instructions of the RCT and RWP.

8.2 Bag Off Daughter Drum (continued)

[26] **IF** a POC was bagged off of the WCG,
THEN GO to Step 10.2[13].

NOTE 1 *Waste containers with liquids (any amount or configuration) that have not been solidified (absorbed) must be managed on secondary containment pallets and have a FREE LIQUID label affixed.*

NOTE *All parent drum RCRA Hazardous Waste Codes are not assigned to a daughter drum when the reason (item) for assigning a RCRA Hazardous Waste Code to the parent drum has not been placed into the daughter drum. The WMC can assist with assigning the appropriate RCRA Hazardous Waste Codes to a drum.*

[27] **CLOSE** the daughter drum in accordance with EP-WCRR-WO-DOP-0221.

[28] **ENSURE** that the Inventory Control Personnel have been notified that daughter drums and an empty parent drum have been generated in Building TA-50-69.

9. PERFORMANCE—ITEM BAG-IN/BAG-OUT OPERATIONS

NOTE *Radiological surveys may be performed as determined necessary [e.g., by an RP representative (e.g., RCT)] anytime during the performance of this procedure.*

9.1 WCG Item Bag-Out

This sub-section is a stand-alone sub-section and may be performed independently of or in conjunction with other sub-sections.

Waste Handling Technician

[1] **ENSURE** that the prerequisite actions have been completed.

[2] **WEAR** respiratory protection as required by the applicable RWP.

RCT

[3] **PERFORM** radiological surveys as necessary during the waste container handling evolutions.

Waste Handling Technician

[4] **IF** radiological contamination is detected,
THEN FOLLOW the instructions of the RCT and RWP.

[5] **ENSURE** that a portable CAM is placed in the vicinity of the filtered bagout bag during WCG operations as directed by RP-1.

[6] **IF** a bag is required on the WCG port,
THEN:

[A] **ENSURE** that the WCG has been wiped down to reduce radiological contamination.

[B] **SET UP** a portable HEPA-filter exhaust system (MAC-21) and elephant trunk as close as possible to the filtered bagout bag in order to increase the local airflow at the site of the horsetail during the cutting operation.

NOTE *Glovebox negative pressure **SHALL** be used to the extent possible in order to remove excess air from the filtered bag-out bag during bagout operations.*

[C] **REMOVE** the retaining band from the drum/bagport/gloveport bag-out stub.

9.1 WCG Item Bag-Out (continued)

[D] **VISUALLY INSPECT** under the retaining band of the previous drum/bagport/gloveport bag-out stub for damage (e.g., tears).

[E] **IF** the previous drum/bagport/gloveport bag-out stub is damaged (e.g., tears), **THEN SEAL** the damaged area with vinyl tape.

[F] **SLIDE** the bag-out stub down to the outer ring of the port (drum, bagport, or gloveport).

[G] **SWIPE** around the port with a maslin smear, and **REQUEST** an RCT monitor the swipe for radiological contamination.

[H] **IF** radiological contamination is detected,
THEN FOLLOW the instructions of the RCT and RWP.

[I] **SLIDE** new bag-on bag over the bag-out stub.

[J] **ADHERE** vinyl tape to the new bag-on bag where the retaining band buckle is to be placed.

[K] **SECURE** the new bag-on bag with the retaining band.

[L] **REMOVE** the bag-out bag stub and drop the bag-out bag stub into the daughter drum/bagport bag/gloveport bag, as applicable.

[7] **ENSURE** that the WCG has been wiped down to reduce radiological contamination.

[8] **ENSURE** a portable HEPA-filter exhaust system (MAC-21) and elephant trunk are set up as close as possible to the filtered bagout bag in order to increase the local airflow at the site of the horsetail during the cutting operation.

[9] **SLIDE** the item to be bagged out to the end of the bag-out bag.

[10] **INSPECT** the bag-out bag for damage (e.g., tears).

[11] **IF** the bag-out bag is damaged (e.g., tears),
THEN:

[A] **REPAIR** the damage (e.g., tears) using vinyl tape.

9.1 WCG Item Bag-Out (continued)

[B] **REQUEST** an RCT survey for radiological contamination.

[C] **IF** radiological contamination is detected,
THEN FOLLOW the instructions of the RCT and RWP.

[12] **MIST** inside of the bag-out bag with spray cleaner and **RUB** the bag-out bag together to ensure the complete coverage of the spray cleaner in order to control contamination.

[13] **SQUEEZE** as much air as possible out of the bag-out bag.

[14] **GATHER** the bag-out bag.

[15] **ROTATE** the drum <u>or</u> **COMPRESS** the bag-out bag (as applicable) in order to create a horsetail approximately 8 to 10 in. long.

[16] **TIGHTLY SECURE** the horsetail with vinyl tape or filament tape.

[17] **ENSURE** that the horsetail is located far enough away from the filtered bagout bag to avoid creasing, folding, or otherwise challenging the integrity of the filter.

[18] **FIRMLY ATTACH** two binding ties near the center of the horsetail, approximately 6 in. apart.

[19] **IF** bagging out the last item for the work day,
THEN FIRMLY ATTACH a second binding tie approximately 2 in. from the center of the horsetail on the WCG side of the horsetail.

NOTE *The excess part of the binding tie protruding through the binding tie latch tie is <u>not</u> to be cut off.*

[20] **COVER** the attached binding ties with vinyl tape.

Waste Handling Technician Three

[21] **POSITION** the horsetail cutters between the binding ties of the horsetail.

Waste Handling Technician One

[22] **GRASP** top of horsetail.

9.1 WCG Item Bag-Out (continued)

Waste Handling Technician Two

[23] **GRASP** bottom of horsetail.

WARNING

Extremities SHALL <u>not</u> be placed inside the jaws of the cutting tool in order to prevent personnel injury due to pinching.

Waste Handling Technician Three

[24] **CUT** the horsetail between the binding ties.

Waste Handling Technician One and Two

[25] **SIMULTANEOUSLY COVER** the cut stubs of the bag-out bag with vinyl tape.

[26] **ENSURE** that the cut-stubs have been covered with a final layer of vinyl tape, as directed by an RCT.

NOTE 1 *Used cheesecloth **SHALL** be disposed of as compactable waste.*

NOTE 2 *The following step may be performed out of sequence.*

Waste Handling Technician Three

[27] **WIPE** down the cutters used to cut the horsetail, and **PLACE** the cutters in a holder, and **PLACE** the cutters in the designated staging area.

Waste Handling Technician

[28] **IF** the bag-out bag has a filter that is covered with tape,
THEN:

[A] **REMOVE** the tape from bag filter.

[B] **REQUEST** an RCT survey for radiological contamination.

[C] **IF** radiological contamination is detected,
THEN FOLLOW the instructions of the RCT and RWP.

9.2 WCG Introductory Port

This sub-section is a stand-alone sub-section and may be performed independently of or in conjunction with other sub-sections.

NOTE *This sub-section provides instructions for introducing items into the WCG.*

WARNING

Items are not to be removed from the WCG using the airlock since items placed in the airlock from the interior of the WCG are possibly radiologically contaminated.

Waste Handling Technician

[1] **ENSURE** that the prerequisite actions have been completed.

[2] **PREPARE** the area in accordance with RCT instructions.

[3] **WEAR** respiratory protection as required by the applicable RWP.

RCT

[4] **PERFORM** radiological surveys as necessary during the waste container handling evolutions.

Waste Handling Technician

[5] **IF** radiological contamination is detected,
THEN FOLLOW the instructions of the RCT and RWP.

WARNING

Both WCG airlock doors are to remain closed until they must be opened to introduce an item into the WCG in order to prevent releasing radiological contamination out of the WCG.

[6] **ENSURE** that both WCG Introductory Port doors are securely closed.

9.2 WCG Introductory Port (continued)

[7] **OPEN** the outer WCG Introductory Port door.

WARNING

Items are to be placed inside of the WCG airlock in a manner that does <u>not</u> disturb the WCG airlock surfaces in order to mitigate the spread of radiological contamination.

[8] **GENTLY PLACE** the item to be introduced into the WCG airlock.

[9] **CLOSE** the outer WCG Introductory Port door.

[10] **OPEN** the inner WCG Introductory Port door.

[11] **REMOVE** the item from the WCG Introductory Port and **PLACE** the item in the WCG.

[12] **CLOSE** the inner WCG Introductory Port door.

[13] **VERIFY** that both WCG Introductory Port doors are securely closed.

10. PERFORMANCE—WCG WASTE PROCESSING

This section is a stand-alone section and may be performed independently of or in conjunction with other Performance sections.

NOTE 1 *Radiological surveys may be performed as determined necessary [e.g., by an RP representative (e.g., RCT)] anytime during the performance of this procedure.*

NOTE 2 *The WCATS desktop application WCRR-REMED is performed in conjunction with this section.*

10.1 WCG Waste Processing Preparation

Waste Handling Technician

[1] **ENSURE** that the prerequisite actions have been completed.

[2] **($) ENSURE** that the battery charger for the cordless drill in the WCG has been unplugged. (SAC 5.10.1.6.1.)

[3] **ENSURE** that the parent drum has been bagged onto the WCG in accordance with Section 7.1, Parent Drum Bag On.

NOTE *The following step may be performed out of sequence.*

[4] **ENSURE** that the daughter drums have been bagged onto the WCG in accordance with Section 8.1, Bag On Daughter Drum, Bagport, or Gloveport, and **RECORD** the following information on Attachment 1:

- Daughter Drum Number
- Daughter Drum Filter Number
- Daughter Drum Bag Filter Number
- Daughter Drum Purchase Order Number

[5] **IF** VE activities are to occur,
THEN ENSURE that CCP-TP-113, Standard Contact Handled Waste Visual Examination, is performed concurrently with this procedure.

[6] **SLOWLY REMOVE** the parent drum lid, being prepared to close the lid if there are unexpected conditions.

[7] **EXAMINE** the contents of the parent drum, and **DETERMINE** whether the contents of the drum have any unexpected items.

10.1 WCG Waste Processing Preparation (continued)

[8] **IF** any unexpected items are present in the parent drum,
THEN:

[A] **CLOSE** the parent drum.

[B] **NOTIFY** supervision and the WCRRF Operations Center of the discrepancy, and **REQUEST** the applicable actions.

[C] **DOCUMENT** the discrepancy and applicable actions in the Comments section of Attachment 1.

NOTE *Placing the parent drum lid over the waste items being surveyed is a simulation of the waste items being inside of a drum and provides a representation of the expected dose rate outside of the drum in order to determine whether the dose rate may exceed 190 mrem/hr and is the desired survey method.*

[9] **ENSURE** that a drum lid is placed over the waste items to be surveyed, as necessary, and **REQUEST** an RCT perform radiological surveys of the items being removed from the parent drum.

NOTE 1 *Unvented, Sealed waste packages are those waste packages that have a positive locking mechanism, such as a gasket with drum closure ring or a screw top lid (with no other openings) to seal the lid to the waste package.*

[10] **IF** the parent drum contains an unvented, sealed waste package,
THEN:

[A] **RECORD** the parent drum identification number on Attachment 4, WCRRF WCG Breaching (Opening) Unvented, Sealed Waste Packages.

10.1 WCG Waste Processing Preparation (continued)

NOTE *Multiple copies of Attachment 4 may be required for parent drums containing more than four unvented, sealed waste packages that are 5- to 30 gal. Only a single copy of Attachment 4 is necessary for parent drums with multiple unvented, sealed waste packages that are less than 5 gal.*

[B] **CHECK** (√) the applicable box on Attachment 4 to indicate the type of unvented, sealed waste package (e.g., Metal 5- to 30-gal, Non-metallic 5- to 30-gal, or < 5-gal).

NOTE *The cordless drill is considered to be a spark-producing tool and is to be placed aside in the WCG, and not handled, when non-sparking tools are required.*

[C] **($) ENSURE** that non-sparking tools are available for use in the WCG, and **ENSURE** that the availability of the non-sparking tools has been documented on Attachment 4. (SAC 5.10.1.6.1).

NOTE *Administrative Control Lock Log Sheet form 10.4 of EP-DIV-AP-0117* ***SHALL*** *be completed anytime the lock is placed or removed for WCG receptacles lockout.*

[D] **($) ENSURE** that the WCG electrical receptacles have been de-energized and locked open/off with an administrative lock, and **CHECK (√)** SAT or UNSAT on Attachment 4, and **MAKE** an entry on the Administrative Control Log Sheet to document that the WCG electrical receptacles are locked open/off. (SAC 5.10.1.6.2)

10.1 WCG Waste Processing Preparation (continued)

NOTE 1 *A proper ground requires that all ends of the grounding strap be firmly attached to a clean-bare metal surface.*

NOTE 2 *Attachment 5,WCRRF WCG Breaching (Opening) Metal 5- to 30-gal Unvented-Sealed Waste Packages Surveillance, is completed to document the operator and independent verifier installing the grounding devices within TA-50-69.*

NOTE 3 *The following step is to be performed by an operator and then independently verified by a second operator.*

NOTE 4 *Separate copies of Attachment 5 are required for each waste package.*

Waste Handling Technician

[E] **IF** the waste package is a METAL 5- to 30-gal waste package,
THEN:

[a] **RECORD** the parent drum identification number on Attachment 5.

[b] **($) ENSURE** that the parent drum has been properly grounded to the WCG using a grounding strap in the WCG, and **CHECK** (√) SAT or UNSAT on Attachment 5 to document that the grounding strap was attached. (SR 4.6.1)

Independent Verifier

[c] **VERIFY** that the parent drum has been properly grounded to the WCG using a grounding strap in the WCG, and **CHECK** (√) SAT or UNSAT on Attachment 5.

10.1 WCG Waste Processing Preparation (continued)

Waste Handling Technician

[11] **IF** processing a parent drum containing an unvented, sealed 5- to 30-gal waste package, **THEN:**

WARNING

Unvented, sealed waste packages may contain a concentration of hydrogen gas and are to be handled or identified in this document using grounding devices and lid restraints in order to minimize any possible adverse effects from potentially releasing hydrogen.

NOTE *Drum lid restraints that are not in use are to be stored in such a matter that the drum lid restraints are protected from degradation (e.g., in a daughter drum).*

[A] **($) VISUALLY** inspect the waste package lid restraint for the following, and **DOCUMENT** the results of the inspection on Attachment 4:

- Degradation (e.g., no indication of cracked parts, missing fasteners, loose or frayed parts, excessive wear, or unusual deformation) (SAC 5.10.1.5.1)
- Missing or illegible identification
- Melting or charring
- Broken or worn stitching in load bearing splices
- Knots in any part of the drum lid restraint
- Discoloration and brittle or stiff areas

[B] **($) ATTACH** the waste package lid restraint to the waste package and verify proper installation, and **DOCUMENT** that the lid restraint has been attached on Attachment 4. (SAC 5.10.1.5.1)

NOTE 1 *A proper ground requires that all ends of the grounding strap be firmly attached to a clean-bare metal surface.*

NOTE 2 *Separate copies of Attachment 4 are required for each waste package.*

[C] **($) IF** the waste package is a METAL 5- to 30-gal waste package, **THEN GROUND** the metal waste package using a grounding strap in the WCG, and **CHECK** (√) SAT or UNSAT on Attachment 5 to document that the grounding strap was attached.. (LCO 3.6 and SR 4.6.1)

Independent Verifier

[D] **VERIFY** that the grounding strap is attached and **CHECK** (√) SAT or UNSAT on Attachment 5.

10.1 WCG Waste Processing Preparation (continued)

[E] **RECORD** the following information, Name, Signature, Z Number and Date on Attachment 5.

Waste Handling Technician

[F] **($) IF** the grounding strap was attached to a waste package or parent drum, **AND** the grounding strap becomes detached from either the waste package or the parent drum during the opening of the waste package,
THEN ENTER the Actions of LCO 3.6, and **NOTIFY** the WCRRF Operations Center. (LCO 3.6)

[G] **OPEN** the waste package, and **REMOVE** the lid restraint and waste package lid.

[H] **ENSURE** that the lid restraint and waste package lid are placed out of the way of the open end of the waste package.

[I] **($) RECORD** the time that the lid restraint and waste package lid were removed from the waste package on Attachment 4. (SAC 5.10.1.5.2 and SAC 5.10.1.6.3)

[J] **ENSURE** that all WCG operations have been suspended.

[K] **($) WHEN** 30 min. has elapsed,
THEN DOCUMENT the time and that greater than or equal to 30 min. has elapsed since the lid restraint and waste package lid were removed on Attachment 4. (SAC 5.10.1.5.2 and SAC 5.10.1.6.3)

[L] **RESUME** operations as directed by supervision.

[M] **REMOVE** the grounding straps from the <u>metal</u> waste package, as applicable.

[N] **IF** the waste packaged opened contains a 5- to 30-gal unvented, sealed waste package,
THEN GO to Step 10.1.[11][A].

[O] **IF** the waste package opened contains an unvented, sealed waste package of less than 5 gal,
THEN GO to Step 10.1[12].

[P] **REMOVE** the grounding straps from the parent drum.

10.1 WCG Waste Processing Preparation (continued)

[Q] **IF** directed by supervision,
THEN REMOVE the administrative lock from the WCG electrical receptacles, and **ENERGIZE** the WCG electrical receptacles.

[12] **IF** processing a parent drum containing an unvented, sealed waste packages of less than 5 gal,
THEN:

[A] **OPEN** the waste packages, and **REMOVE** the waste package lids.

NOTE *For situations where multiple waste packages are being opened (e.g., sample vials) the 30-min. wait period before the electrical receptacles may be re-energized starts after the last waste package is opened.*

[B] **($) RECORD** the time that the last unvented, sealed waste package lid was removed from the waste package on Attachment 4. (SAC 5.10.1.6.3)

WARNING

The WCG electrical receptacles is not to be re-energized until 30 min. has elapsed since the unvented waste package was opened in order to prevent the possibility of a flammable gas mixture deflagration.

NOTE *Glovebox operations may continue after opening a less than 5 gal-unvented sealed waste package while waiting the required 30 min. before re-energizing the WCG electrical receptacles.*

[C] **WHEN** 30 min. has elapsed,
THEN:

[a] **($) DOCUMENT** the time and that that greater than or equal to 30 min. has elapsed since the waste package lid was removed on Attachment 4. (SAC 5.10.1.6.3)

10.1 WCG Waste Processing Preparation (continued)

[b] **REMOVE** the grounding straps from the parent drum.

[c] **REMOVE** the administrative lock from the WCG electrical receptacles, and energize the WCG electrical receptacles as directed by supervision.

[13] **IF** sparking is observed at anytime during the processing of waste material, **THEN:**

[A] **PLACE** a fire barrier (e.g., MET-L-X or fire blanket) over the suspect waste material.

[B] **STOP** waste processing.

[C] **ENSURE** that a Fire Watch has been stationed at the WCG to continuously monitor the waste in the WCG, and **CHECK** (√) YES or NO on Attachment 1.

NOTE *The following personnel are notified by the WCRRF Operations Center:*

- *OM or designee*
- *Solid Waste Regulatory Compliance Group*
- *Industrial Hygienist*
- *Cognizant System Engineer*
- *Radiation Protection*

[D] **NOTIFY** the WCRRF Operations Center/Shift Operations Manager of the discrepancy, and **DOCUMENT** the notification and discrepancy in the Comments section of Attachment 1:

[E] **IF** the suspect item is to be bagged out of the WCG, **THEN BAG OUT** the suspect item in accordance with Section 9.1, WCG Item Bag-Out.

[F] **PLACE** the suspect item in an empty daughter drum.

[G] **IF** the daughter drum is attached to the WCG, **THEN BAG OFF** the daughter drum in accordance with Section 8.2, Bag Off Daughter Drum.

[H] **CLOSE** the daughter drum in accordance with EP-WCRR-WO-DOP-0221.

10.1 WCG Waste Processing Preparation (continued)

[14] **IF** a shielded container (e.g., lead lined) is in the parent drum,
THEN:

WARNING

Personnel are to avoid the high radiation exposure area in front of a shielded container that has been accessed in order to prevent increased exposure to radiation due to radiation streaming from the open portion of the shielded container.

[A] **ENSURE** that personnel in Building TA-50-69 are notified that a shielded container is to be accessed and that they are positioned such that when the shielded container is accessed the radiation streaming from the shielded container is directed away from personnel.

[B] **ACCESS** the shielded container contents without removing the contents, and **REQUEST** an RCT to perform a radiological survey to determine the radiation levels.

[C] **IF** the radiation level exceeds an RWP limit,
THEN:

[a] **ENSURE** that the shielding has been replaced, and **CLOSE** the shielded container.

[b] **REQUEST** an RCT perform a radiological survey on the closed shielded container to determine the radiation levels.

[c] **IF** the closed, shielded container radiation level exceeds the RWP limits,
THEN:

1. **ENSURE** that all waste material is in a safe configuration.

2. **STOP** the work activity.

3. **COMPLY** with the RCT's instructions to minimize radiological exposure.

4. **NOTIFY** the WCRRF Operations Center of the condition, and **REQUEST** the applicable actions.

10.1 WCG Waste Processing Preparation (continued)

NOTE *Waste placed into daughter drums must be from a single parent drum except for the collection drum (pressurized container or aerosol can).*

[d] **IF** the waste material is **NOT** to be processed at this time as directed by supervision,
THEN:

1. **PLACE** the waste items from the parent drum into a daughter drum.

2. **BAG OFF** the parent and daughter drums in accordance with the applicable section of this procedure.

3. **IF** a Fire Watch was stationed,
THEN ENSURE that all INVENTORY is in a safe configuration, and **SECURE** the Fire Watch, and **CHECK** (√) YES or NO on Attachment 1.

4. **NOTIFY** the WCRRF Operations Center of the waste disposition.

10.1 WCG Waste Processing Preparation (continued)

NOTE 1 *Continued operation may require the work activity to be paused in order to allow operators and supervision to evaluate the condition to determine the necessary response to the situation (e.g., re-enter area under a different RWP or prepare a POC to accept the waste material).*

NOTE 2 ***($)*** *A STATIONARY FIRE WATCH is required in the OPERATION and WARM STANDBY MODE when the WCG INVENTORY is greater than 300 PE-Ci equivalent combustible waste. (AC 5.2.3)*

[D] **WHEN** the appropriate actions have been determined,
THEN GO to Step 10.1[15].

[15] **IF** any of the following items are identified during the processing of waste:

- Lead-elemental (e.g., circuit boards)
- Mercury-elemental (e.g., thermometers or switches)
- Batteries (e.g., lead/acid, nickel cadmium, or lithium)
- Light bulbs (i.e., incandescent or fluorescent)
- PCB items (e.g., ballasts, capacitors, or transformers)
- Liquids (any amount not remediated or absorbed)

THEN:

[A] **RECORD** the item descriptive information (item type, size, trade name, if available) in the Comments section of Attachment 1.

NOTE *The Waste Management Coordinator (WMC) may be notified at a time that operationally convenient.*

[B] **NOTIFY** the Waste Management Coordinator (WMC) of items found and whether the items were removed, placed into a separate collection container, or placed into a daughter drum.

NOTE 1 *The WMC can assist with assigning the appropriate RCRA Hazardous Waste Codes to the daughter drum.*

NOTE 2 *The following step may be performed when operationally convenient but must be completed the same day as the identification of the item.*

[C] **ENSURE** that the appropriate RCRA Hazardous Waste Codes is assigned to the drum that receives the item (e.g., daughter drum or collection drum).

10.1 WCG Waste Processing Preparation (continued)

WARNING

Glass sample vials may contain residual granular plutonium hydride which can generate sparks when subjected to mechanical agitation. To reduce the possibility of breaking a glass sample vial and the generation of sparks glass sample vials SHALL be without excessive force. (EP-DIV-REPORT-09)

NOTE *Multiple sections may be performed and repeated in order to completely disposition all of the waste from a parent drum.*

[16] **PERFORM** the following applicable sub-section:
- Section 10.2, Waste Material Greater Than 190 mrem/hr
- Section 10.3, Prohibited Item Disposition
- Section 10.4, Waste Splitting Activities
- Section 10.5, Repackaging Activities
- Section 10.6, Processing Nitrate Salt Drums

10.2 Waste Material Greater Than 190 mrem/hr

The following sub-section provides instructions for the disposition of waste material with an expected radiation dose rate of greater than 190 mrem/hr on contact with the outside of a waste container. Simulating that the waste material is inside of a daughter waste container (e.g., measured through drum lid) is the desired method of determining the expected radiation dose rate of waste material outside of a waste container.

NOTE 1 *Appendix 5, Flowchart for Processing of High Dose Items of Mixed Material Types, illustrates the process for POC operations.*

NOTE 2 *Waste containers with Nitrate Salt and a radiation dose rate of greater than 190 mrem/hr are to be processed in accordance with Section 10.6, Processing Nitrate Salt Drums, before performing this section. An attempt to reduce the radiation dose rate to less than or equal to 190 mrem/hr by absorbing the Nitrate Salt with absorbent should be attempted first. Nitrate Salt absorption reduces the quantity of POCs required to process the waste material.*

Waste Handling Technician

[1] **ENSURE** that a POC assembly has been prepared and is available.

10.2 Waste Material Greater Than 190 mrem/hr (continued)

[2] **DETERMINE** whether the serial numbers on the pipe component lid and the pipe component are the same.

[3] **IF** the serial numbers do **NOT** match,
THEN:

[A] **IDENTIFY** (e.g., tag or mark) the POC indicating that the POC is defective.

[B] **SEGREGATE** the POC in order to prevent the item from being used.

NOTE *The NCR may be initiated at a time that is operationally convenient.*

[C] **ENSURE** that an NCR is initiated in accordance with P330-6, Nonconformance Reporting, as required.

[D] **NOTIFY** the WCRRF Operations Center of the discrepancy.

[E] **GO** to Step 10.2[1].

[4] **IF** the POC is to be bagged onto the WCG,
THEN RECORD the following POC bag-on bag information on Attachment 1:
- Manufacturer
- Model Number
- Serial Number
- Date of Manufacture

[5] **PLACE** the POC assembly and shielding near the vicinity of the WCG to provide shielding during bag-off operations <u>or</u> bag-on the POC to the WCG in accordance with Section 8.1, Bag On Daughter Drum, Bagport, or Gloveport; and **RECORD** the POC drum number and POC unique identification number on Attachment 1.

[6] **IDENTIFY** items to be placed into a POC assembly, and **ENSURE** that an item description is recorded on Attachment 1.

10.2 Waste Material Greater Than 190 mrem/hr (continued)

[7] **IF** the item is to be bagged off of the WCG and the item is from a waste container with a mixed material type,
THEN:

[A] **REMOVE** any lead shielding from outside of the item, and **PLACE** the lead in a daughter drum.

[B] **ENSURE** that a description of the item is recorded on Attachment 1.

[C] **BAG OFF** the item in accordance with Section 9.1, WCG Item Bag Out.

[D] **IF** there is no lead shielding inside of the item (container),
THEN PLACE the bagged out item inside a shielded (pewter) container or cover with a lead blanket.

[E] **GO** to Step 10.2[9].

NOTE *Shielded container is only used for the purpose of ALARA and not for final waste packaging.*

[8] **IF** an individual item is to be bagged out of the WCG,
THEN:

[A] **BAG OUT** individual items in accordance with Section 9.1, WCG Item Bag Out.

[B] **PLACE** the bagged out items in shielded (pewter) container or cover with a lead blanket, as required.

NOTE 1 *A POC assembly drum is full when it has reached its weight limit of 547 lb, or is physically full.*

NOTE 2 *Waste placed into daughter drums or Pipe Overpack Containers (POCs) must be from a single parent drum.*

[9] **WHEN** the item is to be placed into a POC,
THEN ENSURE that the item has been removed from the shielded (pewter) container or lead blanket, as necessary.

[10] **PLACE** the items into the POC.

10.2 Waste Material Greater Than 190 mrem/hr (continued)

[11] **IF** the POC assembly is **NOT** full,
AND the parent drum is still being processed,
AND the POC assembly is **NOT** bagged onto the WCG,
THEN:

[A] **ALIGN** the lid holes with the holes in the pipe component body.

[B] **HAND-THREAD** the lid bolts as far as possible.

[C] **REPLACE** the fiberboard packaging, being careful to match the pipe bolt heads, hoist ring, and filter with cutouts in fiberboard.

[D] **REPLACE** the spacers, liner lid, and drum lid.

[E] **IF** there are additional 190 mrem/hr items to be bagged out of the WCG, **THEN GO** to Step 10.2[7].

[12] **IF** the POC is bagged onto the WCG,
THEN bag-off the POC in accordance with Section 8.2, Bag Off Daughter Drum

[13] **CLOSE** the POC assembly in accordance with the manufacturer's instructions and **DOCUMENT** (initials and Z number) that the POC assembly has been closed in accordance with the manufacturer's instructions on Attachment 1.

[14] **WEIGH** the POC assembly, and **RECORD** the POC Assembly Gross Weight on Attachment 1.

[15] **REQUEST** an RCT perform a radiation survey of the POC, and **RECORD** the POC radiation survey results on Attachment 1.

[16] **IF** the following requirements are **NOT** satisfied:
- External surface radiation dose rates less than 200 mrem/hr (DOE/WIPP-02-3122)
- Gross weight less than 547 lb for a 12 in. POC (CH-TRAMPAC)

THEN NOTIFY the WCRRF Operations Center of the discrepancy, and **REQUEST** the applicable actions.

[17] **LABEL** the POC assembly drum in accordance with EP-DIV-DOP-20043.

10.2 Waste Material Greater Than 190 mrem/hr (continued)

[18] **IF** all of the waste in the parent drum has **NOT** been dispositioned,
THEN GO to the appropriate sub-section to complete processing the remaining waste.

[19] **GO** to Section 11.1, Disposition.

10.3 Prohibited Item Disposition

The following sub-section provides instructions for the disposition of waste material that is considered to be prohibited items at WIPP.

NOTE 1 *The following activities associated with sorting parent drum waste such as the disposition of liquids, pressurized containers, and PCB-contaminated waste may be performed simultaneously or in any order.*

NOTE 2 *The Hold Tag for CCP NCRs is removed from the parent drum and returned to CCP personnel.*

NOTE 3 *A completed PID package includes the following documents:*

- *Attachment 1, WCRRF WCG Waste Processing Data Sheet*
- *Attachment 6, WCRRF Prohibited Item Collection Drum Data Sheet*
- *EP-WCRR-WO-DOP-0221 Attachment 1, Checklist for the Preparation of a New 55-Gallon Drum Assembly*
- *EP-WCRR-WO-DOP-0221 Attachment 2, Checklist for the Closing of a 55-Gallon Drum Assembly*
- *WDP Waste Remediation Safety Evaluation Data Sheet (EP-DIV-AP-20098 Attachment 1)*

Waste Handling Technician

[1] **LOCATE** any contained, uncontained, or free liquids.

NOTE 1 *Waste containers with liquids (any amount or configuration) that have <u>not</u> been solidified (absorbed) must be managed on secondary containment pallets and have a FREE LIQUID label affixed.*

NOTE 2 *By absorbing all liquids the resulting daughter drum is <u>not</u> required to be stored on a secondary containment pallet.*

[2] **IF** liquid is identified inside of transparent or opaque containers that is <u>less than or equal to</u> 60 ml in the containers,
AND the liquid is **NOT** to be absorbed,
THEN PLACE the containers with liquids into the daughter drum.

10.3 Prohibited Item Disposition (continued)

[3] **IF** liquid is identified inside of a transparent or opaque containers (e.g., contents adequately labeled),
THEN:

[A] **RECORD** the approximate liquid volume on Attachment 1.

[B] **OPEN** the containers.

[C] **PERFORM** a pH test of the liquid using Litmus Paper.
- Acid (less than 7)
- Caustic (base – greater than 7)

[E] **NEUTRALIZE** the liquid, as necessary.

[F] **OBTAIN** the appropriate absorbing agent, and **PLACE** the absorbent into a compatible container (e.g., bottle or bag) that has a volume of less than 4 Liters.

NOTE *Multiple containers of less than 4 liters may be required in order to absorb all of the free liquid.*

[G] **TRANSFER** the liquid into the compatible container (e.g., bottle or bag), and **PLACE** the container (e.g., bottle or bag) inside of the daughter drum.

NOTE *Waste containers with liquids (any amount or configuration) that have <u>not</u> been solidified (absorbed) must be managed on secondary containment pallets and have a FREE LIQUID label affixed.*

[4] **IF** liquid is identified in transparent containers or in opaque containers that **CANNOT** be safely opened (e.g., contents adequately labeled),
THEN:

[A] **PLACE** the containers into the daughter drum.

10.3 Prohibited Item Disposition (continued)

[B] **NOTIFY** the WCRRF Operations Center of the discrepancy, and **DOCUMENT** in the Comments section of Attachment 1.

NOTE *Liquids are not to be combined or bulked.*

[5] **IF** any free liquid is identified,
THEN:

[A] **DETERMINE** the approximate volume of liquid, and **DOCUMENT** the approximate amount of liquid on Attachment 1.

[B] **PERFORM** a pH test on the liquid using Litmus Paper.

[C] **NEUTRALIZE** the liquid, as necessary.

[D] **OBTAIN** the appropriate absorbing agent, and **PLACE** the absorbent in a compatible container (e.g., bottle or bag) that has a volume of less than 4 Liters.

[E] **ADD** a small amount of the free liquid to the container (e.g., bottle or bag).

[F] **IF** any reaction occurs between the absorbent and the free liquid,
THEN:

[a] **STOP** the addition work activities.

[b] **NOTIFY** the WCRRF Operations Center of the condition, and **REQUEST** the applicable actions.

[c] **DOCUMENT** the notifications and actions in the Comments section of Attachment 1.

10.3 Prohibited Item Disposition (continued)

NOTE *Multiple containers (e.g., bottle or bag) of less than 4 liters may be required in order to absorb all of the free liquid.*

[G] **IF** processing Nitrate Salts with free liquids,
THEN GO to Sub-section 10.6, Processing Nitrate Salt Drums.

[H] **MIX** the absorbent with the waste.

[I] **ENSURE** absorbent is thoroughly mixed with the liquid.

NOTE *Absorbing waste containers that are categorized as Nitrate Salts will generate additional daughter drums due to the amount of absorbent required to solidify the waste.*

[J] **PLACE** the containers (e.g., bottle or bag) inside of the daughter drum.

[K] **REPEAT** Step 10.3[5] until all liquids have been absorbed.

NOTE *Appendix 4, Volumes of Cylindrical Inner Containers Near 4 Liters, can be used to help determine whether a container is greater than 4 liters.*

[6] **LOCATE** sealed, unpressurized containers greater than 4 liters (that do not contain any liquid), and **DISPOSITION** the container as follows:

[A] **REMOVE** the tape, lid, cap, stopper, or other appropriate method.

[B] **PLACE** the dispositioned items into the daughter drum.

[7] **LOCATE** opaque or non-penetrable item (that do not contain any liquid), and **DISPOSITION** the container as follows:

10.3 Prohibited Item Disposition (continued)

[A] **DESCRIBE** in detail (e.g., size, shape, labeling, weight, material) the opaque or non-penetrable items on Attachment 1.

[B] **PLACE** the dispositioned items into the daughter drum.

[8] **LOCATE** potentially pressurized containers, and **DISPOSITION** the container as follows:

[A] **IF** there is evidence that a potentially pressurized container has been previously punctured and is empty,
THEN:

[a] **PLACE** a metal rod or equivalent (item found in the waste) inside the container and **SECURE** with tape, or **ENLARGE** the hole to be visible by Radiography.

[b] **PLACE** the container inside the daughter drum.

[B] **IF** a potentially pressurized container is **NOT** punctured,
THEN:

[a] **DECONTAMINATE** (wipe down) the potentially pressurized container.

[b] **BAG OUT** the potentially pressurized container in accordance with Section 9.1, WCG Item Bag Out.

NOTE *Item Identification labels are generated as part of performing the WCATS desktop remediation application.*

[c] **PLACE** an Item Identification (ID) label on the potentially pressurized container or bagout bag.

NOTE 1 *A collection drum for pressurized containers and aerosol cans will be established and placed inside one of the WCRRF Transportainers (TSDF).*

NOTE 2 *Pressurized cylinders and aerosol cans must be collected in separate drums (e.g., on collection drum for pressurized cylinders and one collection drum for aerosol cans. All other prohibited items that cannot be remediated must be collected in a separate (third) collection drum.*

[d] **PLACE** the potential pressurized container in a designated collection drum.

10.3 Prohibited Item Disposition (continued)

[e] **ENSURE** that the following information is recorded on Attachment 6 for each item:

- Collection drum number
- Collection drum type (pressurized container, aerosol, or other)
- Date collection drum waste created
- Date item is added to the collection drum
- Item Identification Label Number
- Parent Container Number
- Parent Accumulation Start Date
- Parent EPA Codes
- Item Description
- Item Shape
- Item Size
- Item Labeling
- Item Weight (lb)
- Initials and Z number

NOTE *The hazardous waste label may need to be replaced in order to ensure that all information is added and legible.*

[f] **ENSURE** that the accumulation start date on the collection drum reflects the earliest parent drum accumulation start date recorded on Attachment 6.

[g] **ENSURE** that all EPA Codes from the associated parent drums are documented on the collection drum hazardous waste label.

[9] **IF** any polychlorinated biphenyls (PCB)-contaminated waste is identified, **THEN:**

[A] **DESCRIBE** in detail (e.g., size, shape, labeling, weight, material) the PCB-contaminated waste on Attachment 1.

NOTE *The following step may be performed when operationally convenient.*

[B] **ATTACH** a PCB Item ID Number to the drum receiving the PCB waste (above the top rolling hoop and cover with clear tape), and **RECORD** the PCB Item ID Number on Attachment 1.

10.3 Prohibited Item Disposition (continued)

[C] **PLACE** the PCB-contaminated waste into a daughter drum.

[10] **DOCUMENT** a description of the type of remaining waste added to each daughter drum during the processing of waste from a parent drum on Attachment 1.

[11] **REPEAT** Steps 10.3[2] though 10.3[10] as necessary to completely resolve any PIDs within the parent drum.

[12] **IF** all of the waste in the parent drum has **NOT** been dispositioned,
THEN GO to the appropriate sub-section to complete processing the remaining waste.

NOTE *The following step may be performed out of sequence.*

[13] **DETERMINE** the level of waste placed into the daughter drum, and **RECORD** the Daughter Drum % Full value (%) on Attachment 1.

[14] **BAG OFF** waste containers in accordance with Section 7.2, Parent Drum Bag Off; and Section 8.2, Bag Off Daughter Drum.

[15] **GO** to Section 11.1, Disposition.

10.4 <u>Waste Splitting Activities</u>

The following steps provide instructions for the disposition of waste material with a PE-Ci value that requires the waste material to be divided into multiple daughter drums.

This sub-section is performed following the assaying of the parent drum and the determination of the number of daughter drums to be generated from the parent drum.

Waste Handling Technician

[1] **CAREFULLY REMOVE** a portion of the parent drum's contents (waste items).

[2] **NOTIFY** the Assay Personnel of the estimated weight of the items, as requested.

[3] **PLACE** the waste items into the WCG metal bucket.

[4] **LOWER** the metal bucket into the <u>east</u> daughter drum (closet to airlock).

10.4 Waste Splitting Activities (continued)

Assay Personnel

[5] **PERFORM** a radiological assay of the material in the east daughter drum in accordance with an approved procedure.

Waste Handling Technician

[6] **IF** the assay is higher than desired,
THEN:

[A] **LIFT** the metal bucket out of the east daughter drum.

[B] **REMOVE** some of the metal bucket contents.

[C] **GO** to Step 10.4[4].

[7] **LIFT** the metal bucket out of the east daughter drum.

NOTE *Waste placed into daughter drums or Pipe Overpack Containers (POCs) must be from a single parent drum.*

[8] **PLACE** the waste material into the west daughter drum (farthest from airlock)

[9] **REPEAT** Steps 10.4[1] through 10.4[8] until the desired radiological assay value is reached in the west daughter drum (farthest from airlock).

NOTE *The following step may be performed out of sequence.*

[10] **DETERMINE** the level of waste placed into the daughter drums, and **RECORD** the Daughter Drum % Full value (%) on Attachment 1.

[11] **BAG OFF** the west daughter drum (farthest from airlock) in accordance with Section 8.2, Bag Off Daughter Drum.

NOTE *Steps 10.4[12] and 10.4[13] may be performed in any order or concurrently.*

[12] **BAG ON** a new-west daughter drum (farthest from airlock) in accordance with Section 8.1, Bag On Daughter Drum, Bagport, or Gloveport.

10.4 Waste Splitting Activities (continued)

[13] **REPEAT** Steps 10.4[1] through 10.4[12] until all material within the parent drum has been processed.

[14] **WHEN** assaying of waste at the WCG is complete,
THEN ENSURE that the assaying equipment is removed from the WCG Exclusion Zone.

[15] **IF** all of the waste in the parent drum has **NOT** been dispositioned,
THEN GO to the appropriate sub-section to complete processing the remaining waste.

[16] **GO** to Section 11.1, Disposition.

10.5 Repackaging Activities

Waste Operator

[1] **REMOVE** waste items from the parent drum.

NOTE *Waste placed into daughter drums or Pipe Overpack Containers (POCs) must be from a single parent drum.*

[2] **PLACE** the waste items into a daughter drum.

[3] **DOCUMENT** any waste added during the processing of waste from a parent drum on Attachment 1.

NOTE *The following step may be performed out of sequence.*

[4] **DETERMINE** the level of waste placed into the daughter drums, and **RECORD** the Daughter Drum % Full value (%) on Attachment 1.

[5] **BAG OFF** the parent and daughter drums from the WCG in accordance with Section 7.2, Parent Drum Bag Off; and Section 8.2, Bag Off Daughter Drum.

[6] **IF** all the waste in the parent drum has **NOT** been dispositioned,
THEN GO to the appropriate sub-section in this procedure to complete processing of the remaining waste.

[7] **GO** to Section 11.1, Disposition.

10.6 Processing Nitrate Salt Drums

The following sub-section provides instructions for the disposition of Nitrate Salt drums that require the waste material to be mixed with absorbent material. Unless otherwise directed by supervision the minimum ratio of absorbent to Nitrate Salt is 3-parts absorbent to 1-part Nitrate Salt.

[1] **REMOVE** the waste items from the parent drum.

[2] **DOCUMENT** any waste items from the parent drum added to the daughter drum during the waste processing on Attachment 1.

[3] **ENSURE** that an organic absorbent (Kitty Litter/Zeolite® absorbent) is added to the waste material at a minimum ratio of 3-parts absorbent to 1-part waste or at a ratio as directed by supervision.

[4] **ENSURE** absorbent (Kitty Litter/Zeolite® absorbent) is thoroughly mixed with the Nitrate Salt material.

[5] **IF** the measured radiation level of the absorbent/Nitrate Salt mixture is greater than 190 mrem/hr,
AND multiple attempts to reduce the radiation level by splitting the absorbent/Nitrate Salt mixture have been attempted or directed by supervision,
THEN GO to Section 10.2, Waste Material Greater Than 190 mrem/hr.

[6] **IF** the measured radiation level of the absorbent/Nitrate Salt mixture is greater than 190 mrem/hr,
THEN:

[A] **SPLIT** the absorbent/Nitrate Salt mixture.

[B] **REPEAT** Steps 10.6[3] through 10.6[5] for each portion of the absorbent/Nitrate Salt mixture.

[7] **PLACE** process waste into daughter drum.

[8] **REPEAT** Steps 10.6[1] through 10.6[7] for all Nitrate Salt processing.

[9] **REMEDIATE** the contents of the parent drum for other items as applicable.

10.6 Processing Nitrate Salt Drums (continued)

NOTE *Absorbent waste containers that are categorized, as Nitrate Salts will generate additional daughter drums due to the amount of absorbent required to solidify the waste.*

[10] **DETERMINE** the level of waste placed into the daughter drums, and **RECORD** the Daughter Drum % Full value (%) on Attachment 1.

[11] **BAG OFF** the parent and daughter drums from the WCG in accordance with Section 7.2, Parent Drum Bag Off; and Section 8.2, Bag Off Daughter Drum.

[12] **CLOSE** the daughter drum in accordance with EP-WCRR-WO-DOP-0221, Preparing and Closing 55-Gallon Daughter Drum Assemblies.

11. POST-PERFORMANCE ACTIVITY

11.1 Disposition

Waste Handling Technician

[1] **SIGN** and **DATE** the applicable attachments.

Cognizant System Engineer

[2] **IF** UNSAT was checked on Attachment 5,
THEN:

[A] **PERFORM** an Immediate Operability Determination (IOD) in conjunction with the SOM in accordance with AP-341-516, Operability Determination and Functionality Assessment.

[B] **IF** the IOD is that the Structure, System, and Component (SSC) is operable, **AND** information is available that could change the outcome of the IOD, **THEN PERFORM** an Prompt Operability Determination for the deficiency in accordance with AP-341-516.

[C] **NOTIFY** the applicable Operations Center and SOM of the operability determination, as applicable.

[D] **PRINT, SIGN, Z number** and **DATE** Attachment 5.

SOS or designee

[3] **IF** a Fire Watch was stationed,
THEN ENSURE all INVENTORY is in a safe configuration, and **SECURE** the Fire Watch, and **CHECK** (√) YES or NO on Attachment 1.

[4] **IF** Section 10 was performed,
THEN ENSURE that the WCATS desktop application WCRR-REMED has been completed and the all-in-one labels generated and applied in accordance with EP-DIV-DOP-20043.

[5] **REVIEW** the applicable attachments for accuracy and completeness.

[6] **IF** any discrepancies are identified,
THEN RESOLVE the discrepancies with the original surveillant to correct the documentation.

11.1 Disposition (continued)

[7] **IF** Attachment 5 was completed,
THEN:

[A] **CHECK** (√) YES or NO to indicate whether the applicable acceptance criteria is satisfied on Attachment 5.

[B] **IF** the applicable acceptance criteria is **NOT** satisfied,
THEN:

[a] **ENSURE** that the applicable TSR actions have been implemented.

[b] **ENSURE** that the actions of EP-DIV-AP-13, EWMO TSR-Related Operational Limits Actions Compliance Tracking, have been implemented.

[c] **ENSURE** that the WCRRF Operations Center, SOM and EWMO Facility Operations Director (FOD) have been notified of the discrepancy.

[8] **PRINT, SIGN,** and **RECORD** Z#, Date/Time on the applicable attachments.

[9] **FORWARD** the applicable attachments to the WCRRF Operations Center.

[10] **ENSURE** that the Administrative Control Lock Log Sheet form, lock and key are returned to WCRRF Operation Center.

[11] **IF** a prohibited item collection drum was brought into TA-50-69,
AND waste processing is complete,
THEN ENSURE that the prohibited item collection drum is moved out of TA-50-69.

NOTE *Completing a Post-Job Review may be accomplished using the applicable P300 form or online (the preferred method since the institution has access to feedback and lessons learned http://int.lanl.gov/safety/iwmc/ [Click on the Submit IWD Part 4, Post-Job Review]).*

[12] **IF** any of the following occur:
- A new activity was completed for the first time
- A request was made by anyone involved with the performance of this procedure to perform a post-job review
- An abnormal event occurred
- A revision to an existing procedure was issued and it has been determined by the procedure owner or designee that a Post-Job Review is required

THEN PERFORM a Post-Job Review in accordance with P300.

11.1 Disposition (continued)

[13] **IF** the Post-Job Review identified any necessary changes to this procedure, **THEN INITIATE** a revision to this procedure.

11.2 Records Processing

Waste Handling Technician or Supervision

[1] Disposition records in accordance with the following:

Record Identification	Record Type Determination	Protection/Storage Method	Processing Instructions
Attachment 1, WCRRF WCG Waste Processing Data Sheet Attachment 2, WCRRF WCG Critical Lift Plan Concurrence Sheet Attachment 3, WCRRF WCG Drum Lift Inspection Data Sheet Attachment 4, WCRRF WCG Breaching (Opening) Unvented, Sealed Waste Packages Checklist Attachment 5, WCRRF WCG Breaching (Opening) Metal 5- to 30 gal Unvented, Sealed Waste Package Surveillance Attachment 6, WCRRF Prohibited Item Collection Drum Data Sheet	Quality Assurance (QA) Record	Supervision **SHALL** implement a reasonable level of protection to prevent loss and degradation. Records should be maintained in a one-hour fire rated metal file cabinet when not in use. The instructions in this section may vary depending on the record such as some records may be retained in an Operations Center for a period of time (e.g., 1 year) in order to provide trending data or evidence of compliance.	When the records are ready for final disposition, the record is transferred to Records Management in accordance with EP-DIR-AP-10003, Records Management Procedure For ADEP Employees.

12. REFERENCES

ABD-WFM-006, Technical Safety Requirements (TSRs) for Waste Characterization, Reduction, and Repackaging Facility (WCRRF)

AP-341-516, Operability Determination and Functionality Assessment

CCP-TP-113, CCP Standard Waste Visual Examination

CH-TRAMPAC, Contact Handled – Transuranic Waste Authorized Methods for Payload Control

DOE/WIPP-02-3122, Transuranic Waste Acceptance Criteria For Waste Isolation Pilot Plant

EP-DIV-AP-0112, EWMO Pre-Job Briefings

EP-DIV-AP-13, EWMO TSR-Related Operational Limits Actions Compliance Tracking

EP-DIV-AP-20047, LTP Glovebox/Glovebag and Glove Safety Program

EP-DIV-AP-20098, LTP TRU Waste Remediation Safety Evaluation

EP-DIV-AP-0117, WDP Division Forms

EP-DIV-AP-0120, EWMO Watchbill Administration

EP-DIV-DOP-20043, LTP TRU Waste Container Labeling

EP-DIV-POLICY-20057, EWMO Health and Safety Policy-Manual Movement

EP-DIV-REPORT-09, Engineering Path Forward Report for CMR Wing 2 Containers

EP-DIR-AP-10003, Records Management Procedure For ADEP Employees

EP-WCRR-FO-DOP-0201, WCRRF and Building TA-50-69 TSR Mode Change

EP-WCRR-RM-AOP-0208, Special Shapes

12. REFERENCES (continued)

EP-WCRR-WO-DOP-0221, Preparing and Closing 55-gal Daughter Drum Assemblies

EP-WCRR-WO-DOP-0236, WCRRF Loading/Unloading SWB or 85-gal Drum

EP-WCRR-WO-DOP-0239, Verifying WCRRF Scales

EWMO-DO-07-042, Memo. Dtd. Jul 6 ,2007, WCRRF Pu-238 Glovebag Issue

Form 1489, Pre-Operational Inspection Record for Overhead Cranes and Hoists

P101-18, Procedure for Pause/Stop Work

P101-25, Cranes, Hoists, Lifting Devices, and Rigging Equipment

P330-6, Nonconformance Reporting

APPENDIX 1
Page 1 of 3

WASTE DRUM CRITICAL LIFT PLAN

Purpose

This critical lift plan is used for loading degraded or loss of integrity drums or drums that satisfy the critical lift requirements of P101-25 with the WCG Drum Lift as required by ABD-WFM-006, Technical Safety Requirements (TSRs) for Waste Characterization, Reduction, and Repackaging Facility (WCRRF). This critical lift plan must be used to lower degraded drums with waste material using the WCG Drum Lift. This plan will be used to handle and prepare waste drums at Area-G and at WCRRF for a critical lift.

General Guidelines/Notes

This critical lift plan has been prepared in accordance with P101-25, Cranes, Hoists, Lifting Devices, and Rigging Equipment.
Drum handling operations involving degraded/loss of integrity drums or drums that satisfy the requirements for a critical lift in accordance with P101-25 (e.g., drums weighing greater than 468 lb) at WCRRF are performed using approved procedures and lifting equipment specifically designed for this operation.
The following information **SHALL** be reviewed during the critical lift pre-job brief:

1. All lifting and signaling **SHALL** be performed by a qualified operator. Supervision will be by a designated Qualified Crane Operator and Rigger Person-In-Charge (PIC) and documented on the WCRRF WCG Critical Lift Plan Concurrence Sheet.

2. The WCG Drum Lift and drums **SHALL** be visually inspected by the operator and/or qualified PIC. Any noted substandard item **SHALL** be cause for suspending operations until an acceptable replacement is acquired.

3. The rigging procedure **SHALL** be followed. Where changes are required due to site conditions, the changes **SHALL** be reviewed and approved by the Qualified Crane Operator and Rigger PIC.

4. The weight of the load **SHALL** include the 55 gal drum and lead blankets (if used for shielding purposes). In no case should the lift exceed 624 lb.

5. Communications between the WCG pendant operator and PIC **SHALL** be clear and unobstructed. The primary system **SHALL** be voice communications. Only designated, qualified signalers **SHALL** give signals to the operator. However, the operator **SHALL** obey a stop signal at all times, no matter who gives the signal.

6. <u>A pre-lift meeting with all responsible persons **SHALL** be held before the lifts and each person **SHALL** be assigned specific duties and sign the pre-job sheet.</u>

7. The equipment to be used for this lift will be as applicable: WCG Drum Lift.

APPENDIX 1
Page 2 of 3

Project Notes and Specifications

1. The primary goal is to perform a safe lift in a timely manner.
2. This lift has been frequently performed with equipment stated in this plan. A preliminary lift is not required but if any discrepancies are noted during the lift, the project **SHALL** be stopped and re-evaluated by the Qualified Operator, and Qualified Crane Operator and Rigger PIC.
3. The drum **SHALL** be positioned secured in the WCG Drum Lift to facilitate SAFE and efficient operation. The drum lift pendant operator **SHALL** announce operation of the lift before commencing raising/lowering of the drum and all personnel **SHALL** stand clear and to the side of drum movement. The work area for assembling the payload **SHALL** be limited to personnel necessary for the operation. (Example: Operator, signal personnel, PIC, and RCTs.)
4. The lift requires understanding by the entire crew. This lift plan **SHALL** be thoroughly reviewed by the personnel performing the lift and the Critical Lift / Pre-Lift Meeting **SHALL** be conducted before the lift to ensure that all personnel are aware of their assigned duties. Each person involved in the lift must attend the meeting and sign the attendance sheet.

Competent Person / Lift Supervisor

The responsible person for this lift is the designated Qualified Crane Operator and Rigger PIC.

Emergency Action Plan

1. In the event that an emergency occurs, all operations **SHALL** be discontinued and any raised load **SHALL** be lowered/secured, if possible. For specific casualties, operators will also perform required actions of applicable procedures in the WCRRF Response Manual.
2. Each portion of the lift presents a slightly different set of variables as related to a direction and area where the components may be set down temporarily during an emergency.
3. During the pre-lift meeting the operators, riggers, and spotter are to specifically discuss emergency actions at various points during the lift. If the raised load has to be secured the operator will do so and contact the RCT and Qualified Crane Operator and Rigger PIC. All non-essential personnel are to be kept clear of the lift area.
4. The operator and rigging personnel will not resume the lift operations without approval from the RCT and the Qualified Crane Operator and Rigger PIC.
5. In the event of an equipment malfunction and the drum cannot be lowered/secured:
   - The operation will be placed in a safe configuration.
   - The waste will be unloaded from the drum and the drum will be manually removed from the drum lift, if possible, or the CSE will be notified for the applicable actions.

Hazard Assessment

This lift has been reviewed in great detail to ensure a safe lift and minimize hazards. The following items have been identified as unique for this lift.

In no case **SHALL** material being lifted weigh more than 624 lb. (drum + lead shielding).

APPENDIX 1
Page 3 of 3

Test Lift—A test lift is not required for this operation.
Travel Path—At the pre-job/lift briefing a spotter(s) **SHALL** be designated to observe the load along the entire travel path (consider slopes and uneven surfaces).

Overhead Instructions—The Qualified Crane Operator and Rigger PIC and rigging crew **SHALL** physically verify the travel path is clear of overhead obstructions before beginning the lift.

Working Around the Load (Cone of Safety) - Absolutely NO ONE **SHALL** be under the load, or while it is being raised, lowered, or moved. The Qualified Crane Operator and Rigger PIC **SHALL** ensure that the area (in front of the WCG Drum Lift) is clear of non-essential personnel. Specific placement of operators and RCTs **SHALL** be established during the pre-lift meeting.

Securing the Drum Lifting Assembly—The rigging crew s **SHALL** inspect the WCG Drum Lift before lifting a drum.

Equipment List

Ensure the following equipment is present, has undergone physical inspection, is properly calibrated and is ready to support the critical lift steps:

- WCG Drum Lift

Work Steps for Loading a 55 Gallon Drum Using the WCG Drum Lift

Step 1 Verify the drums weighs less than 624 lb.

Step 2 Obtain key from key box, Insert key, and turn on the power to the drum lift.

Step 3 Using the drum lift pendent, lower the drum lift to the lower limit switch or until the bellyband of the lift cradle can grasp the drum evenly.

Step 4 Position the drum on the drum lift with the drum bolt ring accessible for lid removal when inside the glovebox.

Step 5 Close and secure the bellyband, ensuring the bag-off sleeve does not get caught on the bellyband.

Step 6 Raise the drum to the horizontal port and stop, leaving an adequate gap (approximately 12 inches) to mount the bag-off sleeve to the horizontal port.

Step 7 Bag on the parent drum in accordance with this procedure.

Step 8 Turn off the power to the drum lift, remove key, and place in key box.

APPENDIX 2
Page 1 of 1

WCRRF ALLOWED CONTAINER TYPES FOR REMEDIATION

The following "allowed" container types may be remediated in the WCRRF glovebox because there is no concern for hydrogen buildup within the container:

- Containers without a gasket (e.g. containers with slip lids, paint cans, "produce cans" and other similar containers) of any size
- Containers of any size with slip-on lids (with or without a gasket)
- Empty containers of any size
- Fiber board containers of any size
- Sealed containers of any size not containing TRU waste or free liquids
- Any containers with a volume < (less than) 4 liters
- Unvented 5- to 30-gal waste packages

APPENDIX 3
Page 1 of 1

EXAMPLE PREOPERATIONAL INSPECTION RECORD FOR OVERHEAD CRANES AND HOISTS

NOTE: Use these buttons to print or save the form, DO NOT use the browser tool bar. SAVE PRINT

Form 1489

Los Alamos NATIONAL LABORATORY EST. 1943

Preoperational Inspection Record for Overhead Cranes and Hoists

Inspector	Date Inspected	Location
Manufacturer and Type		Serial Number and Rated Capacity

Current Inspections

- Current Annual ANSI/OSHA Inspection Date: _____
- Current Annual Mechanical and Electrical (*if applicable*) PM's Date: _____
- Current Monthly Inspection Date: _____

Main or Auxiliary Hoist Rope			
• Is there any distortion such as kinking, crushing, unstranding, bird-caging, heat damage, or core protrusion?	☐ Yes	☐ No	☐ N/A
• Are there six randomly distorted broken wires per rope lay or three broken wires per strand per rope lay?	☐ Yes	☐ No	☐ N/A
• Is there wear of 1/3 the original diameter of outside individual wires?	☐ Yes	☐ No	☐ N/A
Load Chain			
• Is there elongation or distortion?	☐ Yes	☐ No	☒ N/A
• Any twisting, corrosion, pitting, or discoloration?	☐ Yes	☐ No	☒ N/A
• Any gouges, nicks, or weld splatter?	☐ Yes	☐ No	☒ N/A
Spooling, Reeving			
• Is there cross-winding?	☐ Yes	☐ No	☐ N/A
• Are the rope stays together and in alignment?	☐ Yes	☐ No	☐ N/A
• Is there any double winding or overwinding?	☐ Yes	☐ No	☐ N/A
• Is there minimum of two wraps at lowest position?	☐ Yes	☐ No	☐ N/A
Anchoring			
• Anchoring secured or installed in accordance with manufacturer's recommendations?	☐ Yes	☐ No	☐ N/A
• Is there minimum of two wire rope clips?	☐ Yes	☐ No	☒ N/A
Main or Auxiliary Hook			
• Is the throat opening not greater than 15% of normal?	☐ Yes	☐ No	☒ N/A
• Is there less than ten degree twist out of plane?	☐ Yes	☐ No	☒ N/A
• Any deformities or cracks?	☐ Yes	☐ No	☒ N/A
• Are the safety latches present and functional?	☐ Yes	☐ No	☒ N/A
Markings			
• Are the rated capacities conspicuously posted?	☐ Yes	☐ No	☐ N/A
• Are the controllers properly marked? Are remote crane controllers affixed a label which contains the following information? (crane manufacturer, location, and other information specific to the unit being operated) _____	☐ Yes	☐ No	☐ N/A
• Is the main disconnect properly marked?	☐ Yes	☐ No	☐ N/A
Are the items listed functional?			
• Brakes	☐ Yes	☐ No	☐ N/A
• Controllers	☐ Yes	☐ No	☐ N/A
• Limit switches	☐ Yes	☐ No	☐ N/A
• Lights, warning devices	☐ Yes	☐ No	☒ N/A
• Trolley	☐ Yes	☐ No	☐ N/A
• Bridge	☐ Yes	☐ No	☒ N/A
• Main or auxiliary load	☐ Yes	☐ No	☐ N/A

Remarks:

Form 1489 (12/10)

EXAMPLE

APPENDIX 4
Page 1 of 1

VOLUMES OF CYLINDRICAL INNER CONTAINERS NEAR 4 LITERS

Diameter		Height		Volume (liters)
3”	7.6 cm	12”	30.5 cm	< 4
3”	7.6 cm	18”	45.7 cm	< 4
4”	10.7 cm	12”	30.5 cm	< 4
4”	10.7 cm	18”	45.7 cm	> 4
4.5”	11.4 cm	12”	30.5 cm	< 4
4.5”	11.4 cm	14”	35.6 cm	< 4
4.5”	11.4 cm	16”	40.6 cm	> 4
4.5”	11.4 cm	18”	45.7 cm	> 4
5”	12.7 cm	8”	20.3 cm	< 4
5”	12.7 cm	10”	24.5 cm	< 4
5”	12.7 cm	12”	30.5 cm	> 4
5”	12.7 cm	14”	35.6 cm	> 4
5.5”	14 cm	8”	20.3 cm	< 4
5.5”	14 cm	10”	24.5 cm	> 4
5.5”	14 cm	12”	30.5 cm	> 4
6”	15.2 cm	8”	20.3 cm	> 4
6”	15.2 cm	10”	24.5 cm	> 4
6.5”	16.5 cm	8”	20.3 cm	> 4
7”	17.8 cm	6.5”	16.5 cm	> 4

<4 = less than 4 liters and does <u>not</u> require remediation

> 4 = greater than 4 liters and requires remediation

APPENDIX 5
Page 1 of 1

FLOWCHART FOR PROCESSING OF HIGH DOSE ITEMS OF MIXED MATERIAL TYPES

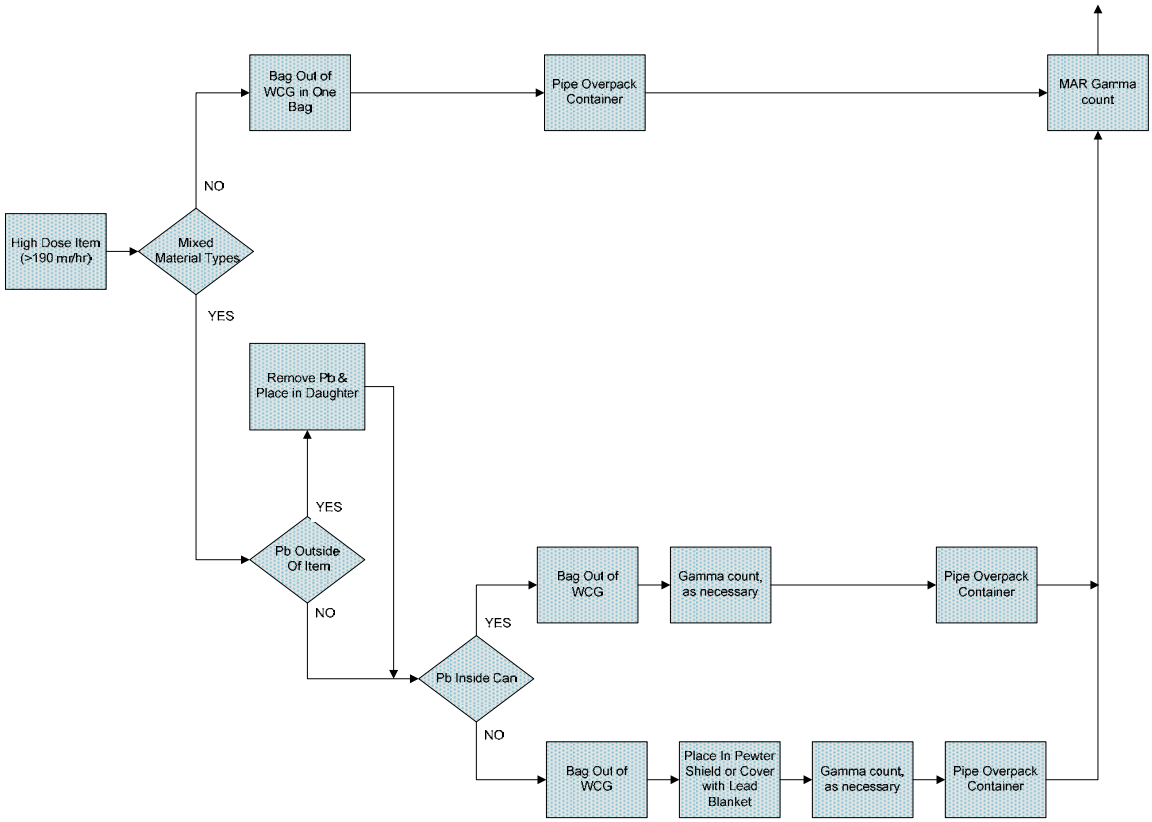

APPENDIX 6
Page 1 of 1

ADMINISTRATIVE CONTROL LOCK LOG SHEET

(Used when needed to track component manipulation)

NOTE: Refer to P315, Conduct of Operations Manual, Attachment 8, Section 8.1.5, for additional guidance.

Facility/Location: _____

Component No.	Authorized By (Shift Mgr.)	New Position	Positioned By	Verified By	Date/ Time	Restored By	Verified By	Date/ Time	Authorized By (Shift Mgr.)

ATTACHMENT 1
Page 1 of 4

WCRRF WCG WASTE PROCESSING DATA SHEET

4.1[6][B] Parent Waste Container No.: _____

6.2[4] Date Processed: _____

4.1[6][B] Processing Activity (EP-DIV-AP-0107):
☐ > 190 mrem/hr ☐ PID ☐ Split ☐ Repack

4.1[6][B] Prohibited Items:
☐ Sealed Containers > 4L ☐ Liquids ☐ Pressurized Containers ☐ N/A

4.1[6][B] Parent Waste Container RCRA Designations: _____

4.1[7] Activity Hazard Classification based on Anticipated Extremity Radiation Dose Rate:
☐ Moderate (≤ 10 rem/hr) ☐ High/Complex (> 10 rem/hr)

4.3[1]/4.3[2] **($)** TA-50-69 is in the OPERATION or WARM STANDBY MODE (TSR 1.2) ☐ OPERATIONS ☐ WARM STANDBY ☐ N/A

4.3[4][B] Platform Scale: Equipment No.: _____
Cal. Due Date: _____

4.3[5][B] **($)** Three 1-Liter containers carbon spheroids or MET-L-X in WCG: (SAC 5.10.1.7.1) ☐ YES ☐ NO ☐ N/A

4.3[6] **($)** Stationary Fire Watch has been established: ☐ N/A
(> 300 PE-Ci Equivalent Combustible)
(SAC 5.10.1.7.2) _____ (Initial and Date)

4.3[7 [A] Parent Waste Container degraded, loss of integrity, or weighs greater than 468 lb but less than or equal to 624 lb:
☐ YES ☐ NO ☐ N/A

4.3[8][D] WCG glove and bag-in/bag-out bag inspection: ☐ SAT ☐ UNSAT ☐ N/A

Performed By: _____ / _____ / _____ / _____
Waste Handling Tech (print) Signature Z # Date

ATTACHMENT 1
Page 2 of 4

4.1[6][B] Parent Waste Container No.: _____

5.[18] Prepared Parent Drum Weight (lb) including items secured to drum top, as applicable: _____ lb

6.2[5][A] Parent Drum Lead Blanket Weight (lb): _____ lb

6.2[5][B]/ 6.2[6] Total Parent Drum Weight (lb) _____ lb

6.2[7] **($)** Total Parent Drum Weight < 624 lb (SR 4.5.1): ☐ SAT ☐ UNSAT

6.2[17][D] Drum lift hinge pin retaining clip replaced. _____ / _____ / _____
Initials Z# Date

6.2[28] Approval to leave a parent drum attached to the WCG overnight:

_____ / _____ / _____ / _____
EWMO-FOD (print) Signature Z # Date

ATTACHMENT 1
Page 3 of 4

4.1[6][B] Parent Waste Container No.: _____

Daughter Drums					
10.1[4]/10.2[4]	Daughter Drum No.				
10.1[4]	Daughter Drum Filter No.				
10.1[4]	Daughter Drum Bag Filter No.				
10.1[4]	Daughter Drum Purchase Order No.				
10.1[13][C]	WCG Fire Watch Stationed		☐ YES	☐ NO	☐ N/A
10.1[14][C][d]3/11.1[3]	WCG Fire Watch Secured		☐ YES	☐ NO	☐ N/A
10.2[4]	POC bag-on bag: Manufacturer				
	Model No.				
	Serial No.				
	Date of Manufacture				
10.2[5]	POC ID No				
10.2[7][B]/10.2[6]	POC Item Description				
10.2[13]	POC Assembly closed per Manufacturer's instructions. (Initial and Z#)				
10.2[14]	POC Assembly Gross Weight (lb)				
10.2[15]	POC Rad. Survey Results (mrem/hr)				
10.3[3][A]	Approx. Containerized Liquid Vol./Units				
10.3[5][A]	Free Liquid Volume/Units				
10.3[7][A]	Opaque/Non-penetrable Item Description:				
10.3[9][A]	PCB-contaminated Waste Description				
10.3[9][B]	PCB Item ID No.				
10.3[10]	Remaining Waste Description				
10.3[13]/10.4[10]/ 10.5[4]/10.6[10]	Daughter Drum % Full (%)				
10.5[3]/10.6[2]	Description Waste Added During Processing				

ATTACHMENT 1
Page 4 of 4

4.1[6][B] Parent Waste Container No.: _____

Comments: _____

_____
_____
_____
_____
_____
_____
_____
_____

11.1[1] Performed By: _____ / _____ / _____ / _____
Waste Handling Tech (print) Signature Z # Date

11.1[8] Reviewed By: _____ / _____ / _____ / _____
SOS or designee (print) Signature Z # Date/Time

ATTACHMENT 2
Page 1 of 1

WCRRF WCG CRITICAL LIFT PLAN CONCURRENCE SHEET

Critical Lift Concurrence

NOTE *By signing below, I hereby confirm that I have read and understand this critical lift plan, I concur with the information contained herein, and I am authorizing the work to proceed per this plan.*

Name/Signature	Assignment	Date
	Certified Hoisting/Rigging PIC	
	Drum Lift Operator (Certified Hoisting/Rigging Operator)	

ATTACHMENT 3
Page 1 of 2

WCRRF WCG DRUM LIFT INSPECTION DATA SHEET

6.1[2] Inspection Date: _____

6.1[4] Previous number of shaft bolt threads exposed:
- Upper Pulley Bolt Threads visible: _____
- Middle Pulley Bolt Threads visible: _____
- Lower Pulley Bolt Threads visible: _____

6.1[5] Current number of shaft bolt threads exposed:
- Upper Pulley Bolt Threads visible: _____
- Middle Pulley Bolt Threads visible: _____
- Lower Pulley Bolt Threads visible: _____

6.1[6] Shaft bolt end is flush with or extends out of the outer end of the shaft bolt locknut
- Upper Pulley Bolt Threads visible: ☐ YES ☐ NO
- Middle Pulley Bolt Threads visible: ☐ YES ☐ NO
- Lower Pulley Bolt Threads visible: ☐ YES ☐ NO

6.1[7] Shaft bolts do not show any sign of wear between the shaft bolt and the support flange (e.g., shaft not perpendicular to the flange plate):
- Upper Pulley Assembly: ☐ SAT ☐ UNSAT
- Middle Pulley Assembly: ☐ SAT ☐ UNSAT
- Lower Pulley Assembly: ☐ SAT ☐ UNSAT

6.1[9] New upper wire rope damage observed: ☐ YES ☐ NO

TABLE 3-1, UPPER WIRE ROPE DAMAGE

Description of Wire Rope Damage (e.g., wire break, corrosion, or pinch) (6.1[3]/6.1[10])	Previously Identified Damage (√) (6.1[3])	Damage Location from Hoist Drum (inches) (6.1[10])	Distance from damage to nearest wire break (inches) (6.1[10])

ATTACHMENT 3
Page 2 of 2

6.1[2] Inspection Date: _____

6.1[12] New lower wire rope damage observed: ☐ YES ☐ NO

TABLE 3-2, LOWER WIRE ROPE DAMAGE

Description of Wire Rope Damage (e.g., wire break, corrosion, or pinch) (6.1[3]/6.1[13])	Previously Identified Damage (√) (6.1[3])	Damage Location from Hoist Drum (inches) (6.1[13])	Distance from damage to nearest wire break (inches) (6.1[13])

6.1[14][A]/ 6.1[15] There is no more than one wire break within a 2-in. span along the wire rope: ☐ SAT ☐ UNSAT

Comments: _____

6.1[16][A]/ 11.1[1] Performed By: _____ / _____ / _____ / _____
Operator (print) Signature Z # Date

11.1[8] Reviewed By: _____ / _____ / _____ / _____
SOS or designee (print) Signature Z # Date/Time

ATTACHMENT 4
Page 1 of 1

WCRRF WCG BREACHING (OPENING) UNVENTED, SEALED WASTE PACKAGES

10.1[10][A] Parent Drum Container ID: _____ Page _____ of _____

Unvented-Sealed Waste Package type: (10.1[10][B])	☐ Metal 5- to 30-gal ☐ Non-metallic 5- to 30-gal ☐ < 5 gal	☐ Metal 5- to 30-gal ☐ Non-metallic 5- to 30-gal ☐ < 5 gal	☐ Metal 5- to 30-gal ☐ Non-metallic 5- to 30-gal ☐ < 5 gal	☐ Metal 5- to 30-gal ☐ Non-metallic 5- to 30-gal ☐ < 5 gal
($) Non-spark producing tools available in WCG. (SAC 5.10.1.6.1) (10.1[10][C])	☐ YES ☐ NO			
($)WCG electrical receptacles de-energized and locked open/off. (SAC 5.10.1.6.2) (10.1[10][D])	☐ SAT ☐ UNSAT			
($) 5- to 30-gal waste package lid restraint inspected for degradation (e.g., no indication of cracked parts, missing fasteners, loose or frayed parts, excessive wear, or unusual deformation), and determined to be capable of restricting lid. (SAC 5.10.1.5.1) (10.1[11][A])	☐ SAT ☐ UNSAT ☐ N/A < 5 gal	☐ SAT ☐ UNSAT ☐ N/A < 5 gal	☐ SAT ☐ UNSAT ☐ N/A < 5 gal	☐ SAT ☐ UNSAT ☐ N/A < 5 gal
($) Waste package lid restraint attached to waste package and proper installation verified. (SAC 5.10.1.5.1) (10.1[11][B])	☐ SAT ☐ UNSAT ☐ N/A < 5 gal	☐ SAT ☐ UNSAT ☐ N/A < 5 gal	☐ SAT ☐ UNSAT ☐ N/A < 5 gal	☐ SAT ☐ UNSAT ☐ N/A < 5 gal
($) Time 5- to 30-gal lid and lid restraint removed from the waste package. (Start Time) (SAC 5.10.1.5.2) or SAC 5.10.1.6.3) (10.1[11][I])	_____ ☐ N/A < 5 gal	_____ ☐ N/A < 5 gal	_____ ☐ N/A < 5 gal	_____ ☐ N/A < 5 gal
($) Time since 5- to 30-gal lid and lid restraint removed from the waste package. (SAC 5.10.1.5.2) or SAC 5.10.1.6.3) (10.1[11][K])	_____ ☐ N/A < 5 gal	_____ ☐ N/A < 5 gal	_____ ☐ N/A < 5 gal	_____ ☐ N/A < 5 gal
($) Elapsed time since 5- to 30-gal lid and lid restraint removed from waste package is ≥ 30 minutes, and glovebox operations may resume and WCG electrical receptacles may be re-energized. (SAC 5.10.1.5.2) or SAC 5.10.1.6.3) (10.1[11][K])	☐ SAT ☐ UNSAT ☐ N/A < 5 gal	☐ SAT ☐ UNSAT ☐ N/A < 5 gal	☐ SAT ☐ UNSAT ☐ N/A < 5 gal	☐ SAT ☐ UNSAT ☐ N/A < 5 gal
($) Time < 5-gal lid removed from the waste package. (Start Time) (SAC 5.10.1.6.3) (10.1[12][B])	_____ ☐ N/A > 5 gal	_____ ☐ N/A > 5 gal	_____ ☐ N/A > 5 gal	_____ ☐ N/A > 5 gal
($) Time since < 5-gal lid removed from the waste package. (End Time) (SAC 5.10.1.6.3) (10.1[12][C][a])	_____ ☐ N/A > 5 gal	_____ ☐ N/A > 5 gal	_____ ☐ N/A > 5 gal	_____ ☐ N/A > 5 gal
($) Elapsed time since < 5-gal lid removed from waste package is ≥ 30 minutes, and WCG electrical receptacles may be re-energized. (SAC 5.10.1.6.3) (10.1[12][C][a])	☐ SAT ☐ UNSAT ☐ N/A > 5 gal	☐ SAT ☐ UNSAT ☐ N/A > 5 gal	☐ SAT ☐ UNSAT ☐ N/A > 5 gal	☐ SAT ☐ UNSAT ☐ N/A > 5 gal

Comments: _____

11.1[1] Performed By: _____ / _____ / _____ / _____
Operator (print) Signature Z # Date

11.1[8] Reviewed By: _____ / _____ / _____ / _____
SOS or designee (print) Signature Z # Date/Time

ATTACHMENT 5
Page 1 of 1

WCRRF WCG BREACHING (OPENING) 5- to 30-gal
METAL UNVENTED, SEALED WASTE PACKAGE SURVEILLANCE

10.1[10][E][a] Waste Container ID: _____

10.1[10][E][b] **($)** 55-gal parent drum containing an unvented-sealed METAL 5- to 30-gal waste package grounded to the WCG with a grounding strap that is firmly attached at all ends to clean-bare metal surfaces. (SR 4.6.1) ☐ SAT ☐ UNSAT

10.1[10][E][c] **VERIFY** that the grounding strap is attached ☐ SAT ☐ UNSAT

10.1[11][C] **($)** Unvented-sealed METAL 5- to 30-gal waste package grounded to the WCG with a grounding strap that is firmly attached at all ends to clean-bare metal surfaces. (SR 4.6.1) ☐ SAT ☐ UNSAT

10.1[11][D] **VERIFY** that the grounding strap is attached ☐ SAT ☐ UNSAT

11.1[11[E] Verified By: _____ / _____ / _____ / _____
Print Signature Z # Date

Comments: _____

11.1[1] Performed By: _____ / _____ / _____ / _____
Waste Handling Tech (print) Signature Z # Date

11.1[2][D] Reviewed By: _____ / _____ / _____ / _____
CSE (print) Signature Z # Date

11.1[6][A] Acceptance criteria satisfied: ☐ YES ☐ NO

11.1[8] Reviewed By: _____ / _____ / _____ / _____
SOS or designee (print) Signature Z # Date/Time

ATTACHMENT 6
Page 1 of 1

WCRRF PROHIBITED ITEM COLLECTION DRUM DATA SHEET

Container No. (10.3[8][B][e]):	Type (10.3[8][B][e]): ☐ Pressurized Container ☐ Aerosol Cans ☐ Other: _____		Date Created (10.3[8][B][e]):	Page _____ of _____

Date Item Added (10.3[8][B][e])	Item ID No. (10.3[8][B][e])	Parent Container No. (10.3[8][B][e])	Parent Accumulation Start Date (10.3[8][B][e])	Parent EPA Codes (10.3[8][B][e])	Item Description (10.3[8][B][e])	Item Shape (10.3[8][B][e])	Item Size (10.3[8][B][e])	Item Labeling (10.3[8][B][e])	Item Weight (lb) (10.3[8][B][e])	Initials/Z# (10.3[8][B][e])

ENCLOSURE 4

EP-WCRR-WO-DOP-1198, R0: WCRRF Waste Characterization Glovebox Operations

ENV-DO-14-0178

LA-UR-14-25294

Date: JUL 29 2014

WCRRF Waste Characterization Glovebox Operations

Effective Date: 1-31-2014

NOTE *This procedure may be either a Moderate or High/Complex Hazard activity based on the anticipated radiation levels during the performance of the activity in accordance with P300 requirements.*

Hazard Class:	☐ Low	☒ Moderate	☒ High/Complex
Usage Mode:	☐ Reference	☐ UET	☒ Both UET & Reference

The Responsible Manager has determined that the following organizations' review/concurrence is required for the initial document and for major revisions a same type and level review is required. Review documentation is contained in the Document History File:

Environmental Stewardship
Engineering
Industrial Hygiene and Safety
LTP DDP Project Manager
Operations Support
Quality Assurance
Radiation Protection
Shift Operations Manager
Subject-Matter Expert
WCRRF Shift Operation Supervisor

Responsible Manager, LTP-DDP Operations Manager

Name (print)	Z#	Signature	Date
Lou Jalbert	121997	/s/ L Jalbert	1-30-2014

Classification Review: ☐ N/A ☒ Unclassified ☐ UCNI ☐ Classified _____

Name (print)	Z#	Signature	Date
Art Crawford	080070	/s/ Art Crawford	1-30-2014

Working Copy / Information Only (circle one)
Initials / Date: _____/_____

This document fully satisfies the requirements of P300, Integrated Work Management, in order to systematically describe the work activity, the associated hazards, and the controls that **MUST** be employed to mitigate the risks.

REVISION HISTORY

Document Number	Issue Date	Action	Description
EP-WCRR-WO-DOP-0233, R.0	May 2007	New Document	
EP-WCRR-WO-DOP-0233, R.1	June 2007	Major Revision	Added requirement to move assay equipment outside of the WCG exclusion zone when not in use. Added precaution to prevent addition of items from multiple parent drums into a single daughter drum or Pipe Overpack Container. Added precaution for prohibited items – Class 1 oxidizers such as nitrates and reactive flammables.
EP-WCRR-WO-DOP-0233, R.2	June 2007	Major Revision	Added steps for dispositioning of potential pressurized containers.
EP-WCRR-WO-DOP-0233, R3	July 2007	Major Revision	Added steps for disposition of liquids. Added steps for actions to be taken in the event that any actual or suspected Class 1 oxidizers, flammables, or Pyrophoric materials/items are encountered.
EP-WCRR-WO-DOP-0233, R4	July 2007	Major Revision	Made use of glovebag to process Pu-238 inside the WCG optional based on input from the Facility ALARA Review Committee.
EP-WCRR-WO-DOP-0233, R5	July 2007	Major Revision	Added precaution for performance of diligent glove surveys and periodic glovebox wipe-downs when handling Pu-238. Deleted requirement for use of glovebag to process Pu-238 inside the WCG. Deleted Note in Sect. 8.12 which referenced use of partially filled POC's if all waste is from the same waste stream.
EP-WCRR-WO-DOP-0233, R.6	October 2007	Major Revision	Added precaution to prohibit remediation of following in the WCG 1) sealed containers > 4 liters that have a positive locking mechanism, 2) sealed un-vented containers > 4 liters with free liquids. Added action steps to take if containers are encountered. Added "allowed" container types that may be remediated. Added Attachment 3: Real Time Radiography Review for "Un-Allowed" Contents
EP-WCRR-WO-DOP-0233, R.7	October 2007	Minor Revision	Revised wording in Attachment 3 for review of RTR data.
EP-WCRR-WO-DOP-0233, R.8	October 2007	Major Revision	Deleted requirement for Real Time Radiography review & Attachment 3 (will be performed IAW EP-WCRR-WO-DOP-0211). Added section for processing high dose waste items (> 190 mrem/hr) of mixed material types. Added Attachment 3: Flowchart for Processing of High Dose Items of Mixed Material Types.
EP-WCRR-WO-DOP-0233, R.9	TBD	Major Revision	Incorporate the WCRR TSR page change to allow the opening of unvented 5- to 30-gal waste packages inside of the WCG.
EP-WCRR-WO-DOP-0233, R.10	January 2008	Major Revision	Delete requirement for SOM & CSE review of grounding sealed containers prior to venting.
EP-WCRR-WO-DOP-0233, R.11	March 2008	Minor Revision	Revised page 7 of 31 to include processing items that are heavy.

REVISION HISTORY (continued)

Document Number	Issue Date	Action	Description
EP-WCRR-WO-DOP-0233, R12	April 2009	Major	Revise procedure to incorporate the WCRRF TSR Revision 1 changes to the minimum staffing requirements which allows for the SOM to be on-call in the Operations Mode and now includes the requirements for the SOS (requires that the SOS be present at WCRRF during the Operations Mode and on-call in the Warm Standby Mode). This revision does not introduce any new hazards in this procedure. Update forms are required.
EP-WCRR-WO-DOP-0233, R13	May 11, 2009	Minor Revision	Revise procedure to provide guidance for the operator that the glovebox operations may continue after opening a < 5 gal unvented container without waiting 30 min., but the WCG electrical receptacles cannot be re-energized until 30 min. has elapsed since the unvented container was opened. Add additional instructions for creating loops within the document to address waste packages imbedded within other waste packages. This revision does not introduce any new hazards.
EP-WCRR-WO-DOP-0233, R14	June 12, 2009	Major Revision	Revise procedure to incorporate editorial corrections and to provide instructions for what to do when a shielded container is encountered containing radioactive material that exceeds the RWP limit. Add instructions to record the Waste Container Identification Number on the applicable attachments. This revision does not introduce any new hazards.
EP-WCRR-WO-DOP-0233, R15	November 24, 2009	Major Revision	Revise procedure to incorporate instructions for establishing, controlling, and the disposition of the Prohibited Item Collection Drum. Make editorial corrections as necessary. This revision does not introduce any new hazards.
EP-WCRR-WO-DOP-0233, R16	Approved for Training	Major Revision	Revise procedure to perform a pH test using pH strips and change “absorbent” to “approved absorbent” in Appendix 2. Make editorial corrections as necessary. This revision does not introduce any new hazards.
EP-WCRR-WO-DOP-0233, R17	February 18, 2010	Major Revision	Revise procedure to incorporate instructions for recording additional information for the prohibited items placed in the prohibited item collection drum. Incorporate process improvements (step sequences) and make editorial corrections as necessary. This revision does not introduce any new hazards. Incorporate the requirements of P300 and the hazards and controls from JHA 0008741 into this procedure.

REVISION HISTORY (continued)

Document Number	Issue Date	Action	Description
EP-WCRR-WO-DOP-0233, R18	March 22, 2010	Major Revision	Revise procedure to incorporate instructions for glovebox glove inspections and make editorial corrections as necessary. This revision does not introduce any new hazards.
EP-WCRR-WO-DOP-0233, R19	Training Only	Major Revision	Revise procedure to incorporate formality of operations into the procedure and incorporate the four parts of an integrated work document into the procedure in accordance with P300. Change title to WCRRF Waste Characterization Glovebox Operations. This revision is a total rewrite and revision bars have been omitted. This revision does not introduce any new hazards. This revision supersedes the following procedures: • EP-WCRR-WO-DOP-0223, Revision 4 • EP-WCRR-WO-DOP-0231, Revision 4 • EP-WCRR-WO-DOP-0232, Revision 8 • EP-WCRR-WO-DOP-0233, Revision 18
EP-WCRR-WO-DOP-0233, R20	October 27, 2010	Major Revision	Revise procedure to remove the requirements of SAC 5.10.1.2(1) in accordance with TSR Page Change 1.2, the fire blanket and MET-L-X is no longer a TSR requirement. The MET-L-X is being left as an administrative control. Make editorial corrections such as format changes. This revision does not introduce any new hazards.
EP-WCRR-WO-DOP-0233, R.21	November 2, 2010	Major Revision	Revise procedure to require that Building TA-50-69 is in the OPERATION mode for all activities in the procedure. Remove the Note in front of Step 4.3[7]. Add “approximately halfway” to Step 5.[9]. Change WARNING before Step 6.1[11] to indicate that there is no drum on the lift at this time. Revise Step 10.3[3] to remove requirement for testing a small portion of liquid and provide additional guidance for absorbing liquid. Make editorial corrections such as format changes. This revision does not introduce any new hazards.
EP-WCRR-WO-DOP-0233, R.22	November 8, 2010	Minor Revision	Revise procedure to modify hold tag note in Section 10.3 and modify step 10.3[2]. This revision does not introduce any new hazards.
EP-WCRR-WO-DOP-0233, R.23	February 8, 2011	Major Revision	Revise procedure to correct the TSR references and to allow the replacement of WCG bags in the WARM STANDBY mode. This revision does not introduce any new hazards.

REVISION HISTORY (continued)

Document Number	Issue Date	Action	Description
EP-WCRR-WO-DOP-0233, R.24	February 13, 2011	Minor Revision	Revise procedure to correct references and to provide clarification for the closure of a POC. Provide additional guidance for securing the horsetail during bag-in/bag-out operations. Make editorial corrections as necessary. This revision does not alter the purpose, scope, or intent of the original document. This revision does not introduce any new hazards.
EP-WCRR-WO-DOP-0233, R.25	April 13, 2011	Minor Revision	Revise procedure to incorporate process improvements. Incorporate instructions as to what to do if the parent drum closure ring cannot be reinstalled before lowering the parent drum. Make editorial corrections as necessary. This revision does not alter the purpose, scope, or intent of the original document. This revision does not introduce any new hazards.
EP-WCRR-WO-DOP-0233, R.26	April 18, 2011	Minor Revision	Revise procedure to provide instructions for loosening the nut on the closure ring bolt before lifting the waste drum up to the WCG. Make editorial corrections as necessary. This revision does not alter the purpose, scope, or intent of the original document. This revision does not introduce any new hazards.
EP-WCRR-WO-DOP-0233, R.27	June 9, 2011	Minor Revision	Revise procedure to provide instructions for inspecting drum lift hinge pins and attaching hinge pin retaining clips in Section 6.2; and add note that the retaining clips must be ML-2. Update equipment list to reflect ML-2 retaining clip. Make editorial corrections as necessary. This revision does not alter the purpose, scope, or intent of the original document. This revision does not introduce any new hazards.
EP-WCRR-WO-DOP-0233, R.28	August 10, 2011	Major Revision	This procedure is being revised to allow for bagging a POC onto the WCG, to correct the actions to be taken if a drum is stuck on the WCG drum lift, and to allow for processing waste at greater than 10 rem/hr. This last issue makes the activity a High/Complex Hazard Activity. The HA has been modified to allowed for the procedure to be performed as a Moderate or High/Complex Hazard Activity.
EP-WCRR-WO-DOP-0233, R.29	August 12, 2011	Minor Revision	Revise procedure to correct the high/complex activity hazard classification step in Attachment 1 to "> 10 rem/hr." This revision does not introduce any new hazards.

REVISION HISTORY (continued)

Document Number	Issue Date	Action	Description
EP-WCRR-WO-DOP-0233, Rev 29 IPC-1	August 29, 2011	IPC-1	Revised to change word in step 5.[11] from below to above and a caution and additional language to step 5[12] added ENSURE banding material is not placed around the hoop.
EP-WCRR-WO-DOP-0233, R.30	Training Only	Minor Revision	Revised to update requirements from page change 2.0 and 2.1 associated with STATIONARY Fire Watch in precautions, limitations and associated. Steps of the procedure when inventory is greater than >300 PE Ci. A STATIONARY FIRE WATCH is required in OPERATIONS and WARM STANDBY MODE when the WCG contains INVENTORY > 300 PE-Ci of EQUIVALENT COMBUSTIBLE WASTE. (SAC 5.10.1.7.1) and WCG SHALL be equipped with three 1-litre containers of carbon spheroids or MetL-X when the glovebox INVENTORY is >300 PE-Ci of EQUIVALENT COMBUSTIBLE WASTE (SAC 5.10.1.7.2), and WCG operators SHALL be trained in glovebox fire suppression techniques in order to extinguish small, early developing fires when processing INVENTORY > 300 PE-Ci of EQUIVALENT COMBUSTIBLE WASTE, in coordination with the STATIONARY FIRE WATCH, . This revision has not introduced any additional changes to the JHA.
EP-WCRR-WO-DOP-0233, R.31	Training Only	Minor Revision	Revise procedure to incorporate WCRRF TSR 2.0/2.1 IVR issues. Make editorial corrections as necessary. Revision does not introduce any additional hazards.
EP-WCRR-WO-DOP-0233, R.32	January 31, 2012	Minor Revision	Revise steps referencing 300 PE-Ci to add “equivalent combustible” after PE-Ci. Revision does not introduce any additional hazards.
EP-WCRR-WO-DOP-0233, R.33	April 5, 2012	Minor Revision	Revise procedure to incorporate instructions for the introduction of supplies into the WCG, for leaving a parent drum attached to the WCG overnight, and modify actions for a drum lift deficiency. Make editorial corrections such as correcting step numbering. Revision does not introduce any additional hazards.
EP-WCRR-WO-DOP-0233, R.34	May 24, 2012	Minor Revision	Revise procedure to provide guidance on simulating waste in a drum when obtaining radiation surveys and add the use of the Trolley Rail Clamp. Make editorial corrections such as correcting references. Revision does not introduce any additional hazards.

REVISION HISTORY (continued)

Document Number	Issue Date	Action	Description
EP-WCRR-WO-DOP-0233, R.35	July 2, 2012	Major Revision	Revised to separate verification steps from actual steps in Section 10.1 [10][D] and 10.1[10][E], 10.1[11][C], and reword Step 10.1[11][O] to read If directed by Supervision as a pre condition and Attachment 4 & 5 . Added steps for instructions for Administrative Lock Log, key, and lock Section 10. Added Steps to Section 4.1, 6.2, and 7.1 for using the Trolley Clamp Device. No additional hazards were identified during this revision. Rev bars in left column display locations of changes to the procedure.
EP-WCRR-WO-DOP-0233, R.36	August 1, 2012	Major Revision	Revised procedure to incorporate EP-SO-1708, and add steps to clarify the amount of absorbent needed when processing Nitrate Salts. Also added Appendix 6 Administrative Control Lock Log Sheet. No additional hazards were identified during this revision. Revision bars in the left column display location of changes in the procedure.
EP-WCRR-WO-DOP-0233, R.37	March 20, 2013	Major Revision	Revise procedure to allow flexibility with the processing of Nitrate Salts in order to permit flexibility with the amount of absorbent used. Make editorial corrections as necessary. Delete reference to the initiation of an NCR for issues associated with the waste material. No additional hazards were identified during this revision.
EP-WCRR-WO-DOP-0233, R.38	August 29, 2013	Major Revision	Revise procedure to incorporate steps for the implementation of WCATS at WCRRF. Make editorial corrections as necessary. This revision does not introduce any new hazards.
EP-WCRR-WO-DOP-1198, R.0	January 31, 2014	Major Revision	Revised to incorporate current list of approved Manual Drum Movements per WCRR-SO-13, Manual Drum Movement at WCRRF. Added WCRRF Desktop application to WCATS steps as applicable. Added updates for performing a critical lift in accordance with P101-25 Attachment B Revision 2. New procedure number to align with document control. No additional changes were introduces to the hazardous analysis. No Rev bars major revision

TABLE OF CONTENTS

Section Page

TITLE PAGE 1
REVISION HISTORY 2
TABLE OF CONTENTS 8

1. PURPOSE 10

2. SCOPE 10

3. PRECAUTIONS AND LIMITATIONS 11

4. PREREQUISITES ACTIONS 19
4.1 Planning and Coordination 19
4.2 Materials and Equipment 21
4.2.1 Special Tools and Equipment 21
4.2.2 Consumables 21
4.2.3 Measurement and Test Equipment (M&TE) 22
4.3 Field Preparation 22
4.3 Field Preparation (continued) 26

5. PERFORMANCE—PARENT WASTE CONTAINER PREPARATION 32

6. PERFORMANCE—WCG PARENT DRUM LOADING/UNLOADING 36
6.1 WCG Drum Lift Daily Inspection 36
6.2 Parent Drum Loading 40
6.3 Parent Drum Unloading 44

7. PERFORMANCE—WCG PARENT DRUM BAG-ON/BAG-OFF OPERATIONS 47
7.1 Parent Drum Bag On 47
7.2 Parent Drum Bag Off 49

8. PERFORMANCE—WCG DAUGHTER DRUM, BAGPORT, OR GLOVEPORT BAG-ON/BAG-OFF OPERATIONS 54
8.1 Bag On Daughter Drum, Bagport, or Gloveport 54
8.2 Bag Off Daughter Drum 56

9. PERFORMANCE—ITEM BAG-IN/BAG-OUT OPERATIONS 60
9.1 WCG Item Bag-Out 60
9.2 WCG Introductory Port 64

10. PERFORMANCE—WCG WASTE PROCESSING 66
10.1 WCG Waste Processing Preparation 66
10.2 Waste Material Greater Than 190 mrem/hr 77
10.3 Prohibited Item Disposition 81
10.4 Waste Splitting Activities 87
10.5 Repackaging Activities 89
10.6 Processing Nitrate Salt Drums 90

11. POST-PERFORMANCE ACTIVITY 92

TABLE OF CONTENTS (continued)

Section Page
11.1 Disposition 92
11.2 Records Processing 94

12. REFERENCES 95

Appendices
Appendix 1, WCRRF Drum Lift Critical Lift Plan (P101-25, Attachment B) 97
Appendix 2, WCRRF Allowable Container Types For Remediation 107
Appendix 3, Example Preoperational Inspection Record For Overhead Cranes and Hoists 108
Appendix 4, Volumes of Cylindrical Inner Containers Near 4 Liters 109
Appendix 5, Flowchart For Processing of High Dose Items of Mixed Material Types 110
Appendix 6, Administrative Control Lock Log Sheet 111
Appendix 7, Manual Drum Movement Special Instructions 112

Attachments
Attachment 1, WCRRF WCG Waste Processing Data Sheet 113
Attachment 2, WCRRF WCG Drum Lift Inspection Data Sheet 119
Attachment 3, WCRRF WCG Breaching (Opening) Unvented, Sealed Waste Packages Checklist 117
Attachment 4, WCRRF WCG Breaching (Opening) Metal 5- to 30 gal Unvented6 Sealed Waste Package Surveillance 119
Attachment 5, WCRRF Prohibited Item Collection Drum Data Sheet 121

1. PURPOSE

This procedure provides detailed instructions for Waste Characterization Glovebox (WCG) operations at the Waste Characterization, Reduction, and Repacking Facility (WCRRF).

TRU waste that has been identified as not satisfying Waste Isolation Pilot Plant (WIPP) acceptance criteria must be remediated to satisfy the WIPP criteria. Prohibited items must be removed or corrected and the container must also satisfy limits on the amount of radioactive material in each container. Containers that fail to satisfy the WIPP criteria maybe sent to WCRRF to be safely remediated in the WCG.

2. SCOPE

This procedure applies to personnel who perform WCG operations.

The Performance sections of this procedure may be performed independently or in conjunction with other Performance sections.

As used within this procedure a parent waste container is the originating waste container received at WCRRF for processing and a daughter drum is the resulting waste container packaged with the originating waste container waste. There may be multiple daughter drums.

This procedure addresses the following WCG activities:

- Preparation of parent waste containers
- Daughter drum, bagport, and gloveport bag-on/bag-off operations
- Parent drum bag-on/bag-off operations
- Parent drum WCG loading/unloading operations
- WCG waste processing

This procedure addresses the following activities for the complete processing and disposition of waste material within the WCG:

- Visual Examination (VE)
- Prohibited Item Dispositioning (PID)
- Pipe Overpack Component (POC)
- Waste Splitting
- Repackaging

This procedure is performed in conjunction with the Waste Compliance and Tracking System (WCATS), in order to track the WCRRF and Building TA-50-69 radioactive material inventory, populate WCATS with waste container information, to generate Transuranic (TRU)

2. SCOPE (continued)

Waste Storage Records (TWSRs), to generate labels, and to associate new daughter waste containers with the parent waste container.

The performance of this procedure may be classified as a Moderate or High/Complex Hazard activity based on the potential radiation levels encountered during the performance of this activity. To accommodate the two hazard classifications this document requires the identification of the potential radiation levels that may be encountered and documentation of the hazard classification level (moderate or high/complex).

Appendix 7, Manual Drum Movement Special Instructions, is a list of approved methods for manual drum movements developed in accordance with EP-DIV-SO-20057, EWMO Health and Safety Policy-Manual Movement for WCRRF. From the effective date of this procedure, any manual drum movements not listed in Appendix 7 of this procedure **SHALL** undergo the approval process in accordance with EP-DIV-SO-20057. If an interpretation of Appendix 7 is required, the LTP-DDP Operations Manager will provide the final determination as to whether the manual drum movement is captured on Appendix 7 or the manual drum movement instructions are to be developed in accordance with EP-DIV-SO-20057.

3. PRECAUTIONS AND LIMITATIONS

- This procedure contains special procedure step markings. **($)** is used to identify steps that implement WCRRF Safety Basis requirements. Steps containing **($)** may not be changed without Engineering approval to ensure the safety envelope is maintained.

- To comply with the intent of the As Low As Reasonably Achievable (ALARA) Program, all personnel **SHALL** apply the principles of time, distance, and shielding when working with radiological materials.

- Avoid the open area of a shielded container to prevent an increased exposure to radiation which could result from the streaming of radiation while accessing shielded containers during the processing of waste.

- Activities, items, and containers **SHALL** satisfy approved design specifications, regulatory requirements, process-specific parameters, and procedural requirements. Activities, items, or containers that do not conform to the approved specifications and requirements are considered nonconforming and Nonconformance Reports (NCRs) **SHALL** be generated in accordance with P330-6, Nonconformance Reporting, as required.

3. PRECAUTIONS AND LIMITATIONS (continued)

- When a worker observes an unsafe condition or act that may pose an imminent danger or other safety concern/hazard, the worker has the authority and responsibility to inform the worker engaged in the work and request that the work activity be paused and/or stopped based on the risk posed to the individual, the employees, the environment, or the facility in accordance with P101-18, Procedure for Pause/Stop Work.

- Supervision **SHALL** be notified if this procedure cannot be performed as written.

- Not Applicable (N/A) is documented on the attachments during the performance of this procedure indicating information that is not required to be recorded.

- **($)** TRU WASTE CONTAINERS **SHALL** not be stacked and **SHALL** not be lifted higher than 4 ft, excluding the WCG drum lift and lifts during loading or unloading from delivery trucks. (SAC 5.10.2.2)

- Drums **SHALL** not be lifted greater than 4 ft during any operation involved in preparing the drum.

- This procedure **SHALL** not be used to prepare DEGRADED/LOSS OF INTEGRITY drums. DEGRADED/LOSS OF INTEGRITY drums are prepared in accordance with EP-WCRR-WO-DOP-0236, WCRRF Loading/Unloading SWB or 85-Gal Drum.

- **($)** Drums **SHALL** be verified to weigh less than 630 lb before lifting the drums using the WCG drum lift. (SR 4.5.1) Administratively drum weights **SHALL** be limited to 624 lb in order to take into consideration the uncertainties of the instrumentation.

- This procedure is to be performed only by Waste Handling Operators as qualified Glovebox Operators.

- To avoid pinch points, the drum lift pendant operator **SHALL** announce operation of the drum lift before commencing raising/lowering of a drum and that all personnel **SHALL** stand clear and to the side of drum movement.

- **($)** The facility must be in the OPERATION MODE to process waste in the WCG. (TSR 1.2)

3. PRECAUTIONS AND LIMITATIONS (continued)

- The approximate weight of load should be known before moving and the appropriate capacity lift selected. Be aware of uneven loading and shifts in the load when moving.

- Drums can have sharp edges and create pinch points when being moved – use appropriate gloves when handling drums.

- Use proper lifting techniques and buddy system and wear steel toed shoes when performing heavy lifting or movements and comply with the requirements of EP-DIV-Policy-20057, EWMO Health and Safety Policy-Manual Movement.

- **($)** No flammable liquids or gases, and no combustible liquids with NFPA Flammability Rating greater than 1 **SHALL** be stored or used within BUILDING TA-50-69 when INVENTORY is in BUILDING TA-50-69 except three size 1 cylinders of P-10 gas and flammable or combustible liquids found in the TRU WASTE CONTAINER. (LCO 3.4.2)
- Portable high-efficiency particulate air (HEPA) filter ventilation equipment **SHALL** be removed from the WCG Exclusion Area after operations are complete. This limitation supports LCO 3.4.2.

- Due to the unique characteristics of Pu-238, diligent glove surveys should be performed before and after handling Pu-238, as well as periodic glovebox wipe downs.

- All operators involved in the execution of this procedure must be qualified as Waste Handling Operators.

- Fire Patrol or Stationary Fire Watch **SHALL** be established in accordance with the applicable Technical Safety Requirements and identified in EP-DIV-AP-0120, EWMO Watchbill Administration.

- STATIONARY FIRE WATCH **SHALL** be performed in accordance with EP-DIV-AP-0120, EWMO Watchbill Administration.

- **($)** WCG **SHALL** be equipped with three 1-liter containers of carbon spheroids or Met-L-X when the glovebox INVENTORY is > 300 PE-Ci of EQUIVALENT COMBUSTIBLE WASTE. (SAC 5.10.1.7.1)

- An administrative control will ensure that the WCG will be equipped with three 1-liter containers of carbon spheroids or MET-L-X to prevent the potential spread of a fire in the glovebox regardless of the inventory quantity in the WCG.

3. PRECAUTIONS AND LIMITATIONS (continued)

- **($)** A STATIONARY FIRE WATCH **SHALL** be in place when the WCG contains INVENTORY > 300 PE-Ci of EQUIVALENT COMBUSTIBLE WASTE, in order to extinguish small, early developing fires, in coordination with WCG operators. (SAC 5.10.1.7.2)
- When processing a parent drum if an item is encountered to be too large or heavy to handle supervision is to be notified.

- Use caution when performing glovebox operations. Operations may involve handling of sharp objects, applying force to objects with tools, lifting heavy materials or items.
  - The glovebox gloves **SHALL** have cut resistant (e.g., leather, or HexArmor®) gloves over them during glovebox operations when handling sharp objects or opening/closing waste containers.
  - Use the two-man rule when lifting heavy materials or items.
  - Cut or apply force away from hands and arms.
  - Use approved tools and techniques.
  - Tools **SHALL** be in good working order.

- **($)** WCG operators **SHALL** be trained in glovebox fire suppression techniques in order to extinguish small, early developing fires when processing INVENTORY > 300 PE-Ci of EQUIVALENT COMBUSTIBLE WASTE, in coordination with the STATIONARY FIRE WATCH. (SAC 5.10.1.7.3)

- Unvented, sealed waste packages are those waste packages that have a positive locking mechanism, such as a gasket with drum closure ring or a screw top lid (with no other openings) to seal the lid to the waste package.

- **($)** When breaching (opening) unvented, sealed waste packages in the WCG the following requirements **SHALL** be satisfied:
  - Non-sparking tools and processes **SHALL** be used, (SAC 5.10.1.6.1)
  - Electrical receptacles within the WCG **SHALL** be de-energized before opening the waste package and remain de-energized for a minimum of 30 minutes after removing the lid and lid restraining device. (SAC 5.10.1.6.2) and (SAC 5.10.1.6.3)

- **($)** Before breaching (opening)an unvented, sealed 5- to 30-gal waste packages in the WCG a lid restraining device **SHALL** be inspected for degradation and properly installed (SAC 5.10.1.5.1), and WCG operations **SHALL** be ceased for a minimum of 30 minutes following the removal of the waste package lid and lid restraining device (breaching). (SAC 5.10.1.5.2)

3. PRECAUTIONS AND LIMITATIONS (continued)

- **($)** When processing a positively sealed 30- to 5-gallon metal WASTE PACKAGE in the WCG, the parent 55-gallon drum bagged-on to the WCG and metal WASTE PACKAGE **SHALL** be grounded when the metal WASTE PACKAGE is breached and for 30 minutes after the removal of the lid and lid restraining device. (LCO 3.6)

- Personnel **SHALL** be aware of heat and cold stress indicators and observe co-workers in accordance with the Thermal Stress Awareness Course.

- Personnel protective equipment (PPE) **SHALL** be worn (e.g., safety shoes, cut resistance gloves, and respirator) as required by Industrial Hygiene/Health and Safety and in accordance with the Radiological Work Permit (RWP).

- Sharp objects **SHALL** be covered and properly stored when not in use. Wear cut/puncture resistant glove (e.g., leather) and cut away from your body when in use.

- All sharp objects that are introduced inside the glovebox **SHALL** be properly identified and stored when not in use in accordance with EP-DIV-AP-20047, LTP Glovebox/Glovebag and Glove Safety Program.

- Routine inspection of glovebox gloves **SHALL** be conducted in accordance with EP-DIV-AP-20047 and this procedure.

- To prevent personnel injury due to ergonomic, pinch point, and other general hazards, personnel **SHALL** maintain an awareness of the working environment and task activities and use good work practices and techniques, skill of craft, good ergonomic practices, and minimize time in awkward/uncomfortable positions.

- Spark-producing and non-sparking tools **SHALL** be distinguished from each other. Spark-producing tools are to be set aside in the WCG, and not handled, when non-sparking tools are required.

- A cordless drill may be used to open a parent drum. This will minimize overextending glovebox gloves and potential damage (i.e., tearing a glove) when using a ratchet. The cordless drill is considered to be a spark-producing tool and is to be placed aside in the WCG, and not handled, when non-sparking tools are required.

- Charging of portable electric equipment in the WCG **SHALL** not be performed when there is INVENTORY in the WCG.

3. PRECAUTIONS AND LIMITATIONS (continued)

- Charging of battery operated equipment external to the WCG **SHALL** not be charged within the WCG exclusion zone.

- If receptacle inside the WCG or in the WCG exclusion zone is used, the equipment being plugged in must be in the OFF position before inserting or removing the plug at the receptacle.

- Prohibited items are documented by two distinct processes. One is through the use of the fast scan process, indicated by the GREEN hold tag. The second is through the use of CCP's NCR, indicated by a RED hold tag.

- Waste placed into daughter drums or Pipe Overpack Containers (POCs) must be from a single parent drum.

- Based on waste acceptance criteria, Class 1 oxidizers such as nitrates, and reactive flammables such as lithium metal or hydrides are prohibited items in the WCRRF.

- Liquids removed from a parent drum must be remediated (absorbed) inside of a new container.

- Storage of drum lid restraints when not in use **SHALL** be such that the drum lid restraints are protected from degradation (e.g., daughter drum).

- Avoid slips, trips, and falls by wearing the proper footwear with slip-resistant soles and using handrails when using stairs. Use established pathways when available and avoid walking on uneven or unstable surfaces.

- Glass sample vials may contain residual granular plutonium hydride which can generate sparks when subjected to mechanical agitation. To reduce the possibility of breaking a glass sample vial and the generation of sparks, glass sample vials **SHALL** be handled with care and void volume reduction activities **SHALL** be performed without excessive force. (EP-DIV-REPORT-09)

- The fire protection system sprinkler head located in the WCG is a water source that if activated (inadvertently or as a result of an actual WCG fire) would result in the spread of radiological contamination. Contact with the sprinkler head during waste processing is to be avoided in order to reduce the possibility of the inadvertent initiation of water flow into the WCG.

3. PRECAUTIONS AND LIMITATIONS (continued)

- **($)** No combustibles **SHALL** be stored within the waste characterization glovebox (WCG) exclusion zone. The WCG exclusion zone is 10 ft around the WCG, up to GBE, or up to the walls of Room 102, whichever is less. (LCO 3.4)

  The following are excluded from the above limitations of LCO 3.4
  - INVENTORY that is in the WCG or staged in BUILDING TA-50-69.
  - Combustible components of support equipment (e.g., wiring insulation, operator platforms and rubber mats) within the WCG Exclusion Zone and associated with WCG processing.
  - Drum liners or wrapping around DEGRADED/LOSS OF INTEGRITY drums that are inside BUILDING TA-50-69 being loaded and working amounts of material necessary to complete bag on/off operations such as tape, cheese cloth, and extra operator gloves.
  - Hydraulic fluid within the engineered, closed-loop, containment systems.
  - Combustible components associated with a forklift.

- The Class 2 laser scanning head on the WCATS mobile device can cause eye injury if eye is exposed to the beam. Do <u>not</u> allow eyes of user or observers to become exposed to laser beam.

- The WCATS mobile device contains lithium-ion battery. The operating temperature recommendation for the Workabout Pro 3 (WCATS mobile device) is from -4 degrees F to 122 degrees F. Do <u>not</u> store the WCATS mobile device where temperatures are less than -40 °F or greater than 140 °F. Exposure to extreme temperatures (greater than 140 °F) may cause battery to explode. Keep mobile device out of direct sunlight for extended periods of time when not in use. Do not incinerate, mutilate, short circuit, or disassemble the battery pack. Do not dispose of in municipal waste receptacles. Dispose of in properly marked universal waste disposal areas.

- All manual physical movements of 55-gal and larger drums, whether empty or containing waste, **SHALL** be performed as a last resort and with written approval in accordance with EP-DIV-SO-20057, EWMO Health and Safety Policy-Manual Movement

- All approvals for manual physical movements in accordance with EP-DIV-SO-20057, EWMO Health and Safety Policy-Manual Movement and Appendix 7, Manual Drum Movement Special Instructions.

3. PRECAUTIONS AND LIMITATIONS (continued)

- All critical lift plans executed by LANL personnel **SHALL** be developed using Attachment B, LANL Critical Lift Plan, of P101-25, Cranes, Hoists, Lifting Devices, and Rigging Equipment.

- The instructions in this procedure satisfy the P101-25 ordinary lift requirements and the use of LANL Form 1611, Ordinary Lift Procedure, is not required. Not all of the items listed on Form 1611 are captured in this procedure because this procedure is performed using gantry cranes and forklifts in preapproved locations and lifts standard waste containers of a known size and volume.

- Forklift operations are governed by the LANL procedure P101-4, Forklift and Powered Industrial Trucks. P101-4 requires the completion of the applicable sections of a LANL procedure P101-25 Attachment B for critical lifts involving a forklift or powered industrial truck. Forklift operations not involving a critical lift (e.g., load suspended below the forks of the forklift) are not required to comply with the requirements of P101-25.

- Support Services Subcontractors executing this procedure SHALL comply with the safety and health requirements documented in contractual agreements with the LANL.

4. PREREQUISITES ACTIONS

NOTE *The listed prerequisite actions may be completed in any order.*

4.1 Planning and Coordination

Supervisor or designee

[1] **ENSURE** that this procedure is the latest revision, and **IDENTIFY** this document as Working Copy or Information Only on the Title Page.

[2] **ENSURE** that the performance of this procedure has been scheduled on the WCRRF schedule.

[3] **ENSURE** that an RWP for the planned activity has been issued.

[4] **ENSURE** that a pre-job briefing is conducted for all personnel involved in the performance of this procedure, in accordance with EP-DIV-AP-0112, EWMO Pre-Job Briefings, and that the pre-job briefing included weather conditions, communication requirements, hazards/controls and emergency response actions.

[5] **ENSURE** that, as a minimum, the following personnel trained in the use of this procedure are available for performance of this procedure, as required:

- Two Radiological Control Technician (RCT)
- Four Waste Handling Technician
- One Supervisor (e.g., Shift Operations Supervisor or Person-In-Charge)
- One Central Characterization Project (CCP) representative [Visual Examination (VE) only]
- **($)** STATIONARY FIRE WATCH (greater than 300 PE-Ci equivalent combustible waste only) (SAC 5.10.1.7.2)

4.1 Planning and Coordination (continued)

[6] **IF** performing Section 10, WCG Waste Processing,
THEN:

[A] **ENSURE** that the waste containers to be processed have been evaluated in accordance with EP-DIV-AP-20098, LTP TRU Waste Remediation Safety Evaluation, and that a copy of the LTP Waste Remediation Safety Evaluation Data Sheet (EP-DIV-AP-20098 Attachment 1) has been obtained for each waste container to be processed.

[B] **INITIATE** a copy of Attachment 1, WCRRF WCG Waste Processing Data Sheet for each waste container to be processed, and **DOCUMENT** the following information:

- Parent Waste Container Number (record on each page of Attachment 1)
- Prohibited Items, if present
- Parent waste container RCRA Designations

[C] **ATTACH** a copy of the LTP Waste Remediation Safety Evaluation Data Sheet (EP-DIV-AP-20098 Attachment 1) to Attachment 1.

[7] **OBTAIN** a blank Administrative Control Lock Log Sheet form 10.4 of EP-DIV-AP-0117, lock, and key from the WCRRF Operations Center. (e.g., See Appendix 6, Administrative Control Lock Log Sheet)

[8] **ENSURE** that the TRU daughter waste container labels (e.g., Shorty barcode labels) have been obtained from the Waste Help Team (wastehelp@lanl.gov).

4.2 Materials and Equipment

4.2.1 Special Tools and Equipment

NOTE *The list of special tools and equipment is not an all inclusive list and additional tools and equipment may be used as necessary.*

Waste Handling Technician or Supervision

[1] **ENSURE** that the following special tools and equipment are available, as required:

- Safety glasses with side shields
- Permanent marker
- Cut resistant (e.g., HexArmor™, leather, or leather palm mechanics) gloves
- Drum dolly
- Two-wheel dolly
- Portable HEPA-filter exhaust system
- Cutting tool (e.g., utility knife or PVC cutter)
- WCG metal bucket
- Tools for separating and processing waste
- Non-sparking tools for separating and processing waste
- Banding tool
- ML-2 drum lift hinge pin retaining clips (e.g., E-clips)
- Removable lead glass windows
- Lead blankets
- WCATS mobile device

4.2.2 Consumables

NOTE *The list of consumables is not an all inclusive list and additional consumables may be used as necessary.*

Waste Handling Technician or Supervision

[1] **ENSURE** that the following consumables are available, as required:

- Bag-off bags (filtered or unfiltered)
- Tape (duct or vinyl)
- Binding ties
- Nitrile gloves
- Plastic waste bags
- Drum labels
- Chemwipes or equivalent
- Wire rope inspection cloth (e.g., cheese cloth)

4.2.2 Consumables (continued)

- Fantastik or equivalent
- Banding material
- Banding buckles
- Kitty Litter/Zeolite® absorbent
- 3 Liters Carbon Spheroids or MET-L-X
- Litmus paper
- Lead or lead equivalent WCG gloves
- Velcro®

4.2.3 Measurement and Test Equipment (M&TE)

Waste Handling Technician or Supervision

[1] **ENSURE** that the following measuring and test equipment are available, as required:
- Platform scale
- WCG scale

4.3 Field Preparation

Waste Handling Technician or Supervision

[1] **($) IF** performing any section except Section 8.1, Bag On Daughter Drum, Bagport, or Gloveport, without bagging in waste material,
THEN ENSURE that Building TA-50-69 is in the OPERATION MODE in accordance with EP-WCRR-FO-DOP-0201, WCRRF and Building TA-50-69 TSR Mode Change, and **CHECK** (√) OPERATIONS on Attachment 1, WCRRF WCG Waste Processing Data Sheet. (TSR 1.2)

[2] **($) IF** performing Section 8.1,
AND waste material is **NOT** being introduced into the WCG,
THEN ENSURE that Building TA-50-69 is in the OPERATION or WARM STANDBY MODE in accordance with EP-WCRR-FO-DOP-0201, and **CHECK** (√) OPERATION or WARM STANDBY on Attachment 1. (TSR 1.2)

[3] **ENSURE** that the WCRRF Operations Center has authorized the performance of this procedure.

4.3 Field Preparation (continued)

[4] **IF** performing one of the following sections:
Section 5, Parent Waste Container Preparation,
Section 6, WCG Parent Drum Loading/Unloading,
Section 10, WCG Waste Processing,
THEN:

[A] **ENSURE** that the weekly Platform Scale calibration verification has been performed in accordance with EP-WCRR-WO-DOP-0239, Verifying WCRRF Scales.

[B] **RECORD** the platform scale serial number and calibration due date on Attachment 1.

[C] **IF** the platform scale exceeds the calibration due date,
THEN NOTIFY the WCRRF Operations Center of the discrepancy, and
REQUEST the applicable actions.

[5] **IF** performing Section 10,
THEN:

[A] **ENSURE** that preprinted Item ID Number labels and PCB Item Number labels are obtained from the Waste Management Coordinator.

[B] **($) ENSURE** that WCG contains three 1-Liter containers of carbon spheroids or MET-L-X, and **DOCUMENT** (initials and date) on Attachment 1.
(SAC 5.10.1.7.1)

[C] **ENSURE** that the required number of daughter drums have been prepared in accordance with EP-WCRR-WO-DOP-0221, Preparing and Closing 55-gal Daughter Drum Assemblies.

[D] **REVIEW** Appendix 2, WCRRF Allowable Container Types For Remediation.

[E] **ENSURE** that Prohibited Item Collection Containers (aerosol and pressurized cylinders) <u>or</u> previously initiated Prohibited Item Collection Containers are available, as necessary, and that the Prohibited Item Collection Containers (Holdup Container) have been generated in WCATS and have been labeled.

4.3 Field Preparation (continued)

NOTE *The daughter waste containers (e.g., 55-gal drums) may be prepared in advance of the waste container remediation activity and at a location other than the processing area. As such, the lids may be temporarily placed on the daughter waste containers to allow them to be safely transported to the processing area.*

[F] **ENSURE** that a sufficient number of daughter waste containers (e.g., 55-gal drums) are available, as necessary.

[6] **($) IF** performing Section 10,
AND the parent container TRU-waste material inventory value is greater than 300 PE-Ci equivalent combustible waste,
THEN ENSURE a STATIONARY FIRE WATCH has been established, and
DOCUMENT (Initial and Date) on Attachment 1. (SAC 5.10.1.7.2)

NOTE *The Technical Safety Requirements for WCRRF specify that a critical lift plan is required for lifts and forklift movements involving DEGRADED or LOSS OF INTEGRITY drums. Additionally a critical lift plan is required in accordance with the requirements of P101-25, Cranes, Hoists, Lifting Devices, and Rigging Equipment, such as when the weight of the parent drum is greater than 75% of the WCG drum lift rated capacity (624 lb x .75 = 468 lb).*

[7] **IF** performing Section 6,
THEN:

[A] **DETERMINE** whether the parent drum is a degraded or loss of integrity drum, or whether the parent drum weight is greater than 468 lb but less than or equal to 624 lb, and **CHECK** (√) YES or NO on Attachment 1.

4.3 Field Preparation (continued)

NOTE 1 *The Person-in-Charge (PIC) appointed for the safe handling of critical loads and for the safe handling of non-critical items in, around, or above spaces in which critical items are located* ***SHALL*** *be trained as a qualified crane operator and rigger.*

NOTE 2 *WCRRF drum lift operations is a pre-engineered lift in accordance with P101-25 and require a Critical Lift Plan when the lift satisfies the critical lift criteria of P101-25. Critical lifts executed by LANL personnel* ***SHALL*** *be performed and documented in accordance with Appendix 1, WCRRF Drum Lift Critical Lift Plan (P101-25, Attachment B). Subcontract personnel* ***SHALL*** *comply with the safety and health requirements documented in contractual agreements with LANL and may use the information provided in Appendix 1.*

NOTE 3 *The WCG Drum Lift is a pre-engineered and an approved critical lift. Some items in Appendix 1,* are already pre-populated, therefore the PIC will be required to complete the remaining items and sections left blank.

[B] **($) IF** the parent drum is a degraded or loss of integrity drum, (AC 5.10.3.1) **OR** the parent drum weight is greater than 468 lb but less than or equal to 624 lb, **THEN GENERATE** a critical lift plan.

4.3 Field Preparation (continued)

WARNING

1. **Performance of a pre-operational inspection of the WCG drum lift (Form 1489), SHALL ensure that the entire length of the drum lift cable is inspected. This will require that the drum lift be exercised from the full up to the full down positions.**

2. **The drum lift pendant operator is to announce operation of the lift before raising or lowering the drum and all personnel are to stand clear and to the side of drum movement in order to prevent personnel injuries.**

NOTE *The inspection criteria identified as N/A on Appendix 3, Example Preoperational Inspection record for Overhead Cranes and Hoists, are not required to be performed.*

[C] **IF** performing Section 6 for the first time for the day,
THEN PERFORM a pre-operational inspection of the WCG drum lift components in accordance with P101-25 by completing the applicable sections of Form 1489.

[8] **IF** performing WCG operations (e.g., Section 10, WCG Waste Processing),
THEN:

[A] **DETERMINE** whether the WCG glove change due date marked on each WCG gloves has been exceeded.

[B] **IF** the WCG glove change due date marked on the WCG glove has been exceeded, **OR** a WCG glove or bag-in/bag-out bag fails the inspection,
THEN:

[a] **STOP** operations.

[b] **IDENTIFY** the WCG glove or bag-in/bag-out bag as out-of-service.

[c] **NOTIFY** supervision and an RCT for the applicable actions in accordance with EP-DIV-AP-20047.

4.3 Field Preparation (continued)

NOTE *WCG gloves with a glove change due date that has been exceeded are not required to be inspected in accordance with the following step.*

[C] **INSPECT** the internal and external surfaces of each WCG glove and bag-in/bag-out bag for the following:

- Layer separations
- Cuts
- Natural degradation
- Cracks
- Stiffness
- Punctures
- Splits
- Obvious physical signs of deterioration
- Discoloration
- Surface deposits/debris
- Radiological contamination (internal only)
- Exposed color of the lead liner, if present

[D] **CHECK** (√) SAT or UNSAT on Attachment 1, and **DOCUMENT** the completion of the WCG glove inspection by signing and dating on Attachment 1.

[9] **ENSURE** that glovebox inspections have been completed in accordance with EP-DIV-AP-20047.

[10] **IF** Section 10.4, Waste Splitting Activities, is to be performed,
THEN ENSURE that Low-Level Waste Characterization personnel are available, as necessary.

[11] **IF** this procedure is being performed as a High/Complex Hazard activity as determined in Section 4.1, Planning and Coordination,
THEN:

[A] **ENSURE** that the temporary lead glass windows have been attached (e.g., Velcro®) to the inside of the applicable WCG windows.

[B] **ENSURE** that lead or lead equivalent gloves have been installed on the WCG gloveports.

4.3 Field Preparation (continued)

[C] **ENSURE** that lead blankets have been placed along the bottom of the WCG.

NOTE 1 *The following step may be performed out of sequence and may be performed in Building TA-50-37 (Artic).*

NOTE 2 *The TRU DRUM PREPARATION task on the WCATS mobile device or desktop application may be performed in conjunction with the performance of the physical build of a POC.*

[12] **IF** a POC is to be used,
AND the POC is to be bagged onto the WCG,
THEN:

[A] **OBTAIN** a POC bag-on bag.

[B] **APPLY** vinyl tape to the POC bag-on bag, with a smear pad centered on the tape, over the filter.

[C] **INFLATE** the POC bag-on bag with air from a compressed air source.

[D] **INSPECT** the POC bag-on bag for damage, cuts, or leaks by looking, listening, and feeling.

[E] **STRETCH** the POC bag-on bag's bungee cord, and **INSPECT** the bungee cord for cuts or damage.

[F] **IF** the POC bag-on bag or bungee cord fails the inspection,
THEN:

[a] **IDENTIFY** (e.g., tag or mark) the failed item indicating that item is defective.

[b] **SEGREGATE** the failed item in order to prevent the item from being used.

4.3 Field Preparation (continued)

NOTE 1 *A Quality Assurance (QA) representative may be contacted for assistance with the NCR process.*

NOTE 2 *The NCR may be initiated at an operationally convenient time.*

[c] **ENSURE** that an NCR is initiated in accordance with P330-6, Nonconformance Reporting, as required.

[d] **REPLACE** the defective item.

[e] **GO** to Step 4.3[12][A].

NOTE *The following step may be performed out of sequence to allow for the bulk inspection of liners in order to improve operational efficiencies.*

[G] **OBTAIN** and **VISUALLY INSPECT** a POC plastic/cardboard liner ensuring the exterior surfaces are smooth.

[H] **IF** POC plastic/cardboard liner fails the inspection,
THEN:

[a] **IDENTIFY** (e.g., tag or mark) the POC plastic/cardboard liner indicating that the POC plastic/cardboard liner is defective.

[b] **SEGREGATE** the POC plastic/cardboard liner in order to prevent the item from being used.

NOTE 1 *A Quality Assurance (QA) representative may be contacted for assistance with the NCR process.*

NOTE 2 *The NCR may be initiated at an operationally convenient time.*

[c] **ENSURE** that an NCR is initiated in accordance with P330-6, Nonconformance Reporting, as required.

[d] **REPLACE** the POC plastic/cardboard liner.

[e] **GO** to Step 4.3[12][G].

4.3 Field Preparation (continued)

[I] **PLACE** the POC plastic/cardboard liner into the POC bag-on bag.

[J] **PLACE** the POC plastic/cardboard liner and bag into the POC pipe component.

[K] **ENSURE** that excess POC bag-on bag is placed inside of the POC pipe component.

4.3 Field Preparation (continued)

[L] **PLACE** the POC pipe component lid on the POC pipe component and **TIGHTEN** the lid sufficiently to hold the lid on the POC pipe component.

[M] **PLACE** the POC drum lid on the POC drum and **TIGHTEN** the closure ring bolt sufficiently to hold the drum lid in place.

[13] **ENSURE** that the new daughter waste containers (e.g., POCs and 55-gal drums) have been created in WCATS desktop application using the TRU DRUM PREPARATION application and that the Shorty barcode labels have been applied to the new daughter waste containers (e.g., POCs and 55-gal drums) in accordance with EP-DIV-DOP-20043, LTP TRU Waste Container Labeling.

5. PERFORMANCE—PARENT WASTE CONTAINER PREPARATION

This section is a stand-alone section and may be performed independently of or in conjunction with other Performance sections.

NOTE 1 *Radiological surveys may be performed as determined necessary [e.g., by an RP representative (e.g., RCT)] anytime during the performance of this procedure.*

NOTE 2 *All manual drum movement will be performed in accordance with Appendix 7, Manual Drum Movements Special Instructions and EP-DIV-Policy-20057, EWMO Health and Safety Policy-Manual Movement.*

Waste Handling Technician

[1] **ENSURE** that the prerequisite actions have been completed.

NOTE *Steps 5.[2] through 5.[4] may be performed in Building TA-50-37 (Artic).*

[2] **OBTAIN** an unfiltered bag-off bag or a filtered bag-off bag, and **TAPE OVER** the inside and outside filter openings of a filtered bag-off bag, as applicable.

CAUTION

Care should be exercised when not to over inflate the filtered bag. Apply only enough air to inspect for leaks. (pins holes, leakage around filter attachment points.). Failure to comply with this caution could lead to overstressing the filter and possible pre-damage to the filtered bag.

[3] **INFLATE** the filtered or no filtered bagout bag carefully and slowly while sealing the bag (i.e. securing opening with hand).

[4] **INSPECT** the bag-off bag for damage or cuts examining by sight, sound, and feel.

[5] **IF** the bag-off bag does **NOT** hold the air,
THEN:

[A] **IDENTIFY** (e.g., tag or mark) the bag-off bag indicating that the bag-off bag is defective.

[B] **SEGREGATE** the bag-off bag in order to prevent the item from being used.

5. PERFORMANCE—PARENT WASTE CONTAINER PREPARATION (continued)

NOTE *The NCR may be initiated at a time that is operationally convenient.*

[C] **ENSURE** that an NCR is initiated in accordance with P330-6, Nonconformance Reporting.

[D] **GO** to Step 5.[2].

[6] **TAPE** the drum closure ring bolt in order to prevent tearing or cutting the unfiltered bag-on bag.

[7] **IF** the drum to be processed is **NOT** a degraded or loss of integrity drum, **THEN CUT** off the bottom of a bag-off bag approximately 27 to 30 inches from the bottom of the bag-off bag in order to create a bag-off sleeve.

[8] **SLIDE** the bag-off bag over the top of the drum down to between the second and third rolling hoops (from the top) ensuring that the first and second rolling hoops (from the top) are covered.

NOTE *Enough room must be left between the tape and the drum closure ring bolt in order for the drum closure ring to be removed without damaging the bag-on bag.*

[9] **WRAP** tape (vinyl or duct) around the container so that the bag-off bag is tightly bound approximately halfway between the second and third rolling hoops near the top of the drum and overlapping the bag-off bag onto the drum.

[10] **ENSURE** that the drum wrapping (e.g., tape and bag-off bag) is airtight and no air pockets are present.

WARNING

Placement of duct tape below top rolling hoop may vary to ensure the surface area selected is free of abnormalties (e.g., dents, scrapes). Failure to comply with this could lead to an improper seal and potential unwanted radiological contamintation.

[11] **IF** the abnormalities (e.g., dents, scrapes) are discovered above the top rolling hoop, **THEN WRAP** duc tape around the drum just below the top rolling hoop on a surface that does not container abnormalities (e.g. dents, scrapes.

5. PERFORMANCE—PARENT WASTE CONTAINER PREPARATION (continued)

[12] **WRAP** duct tape around the drum just above the top rolling hoop on a surface that does not contain abnormalities (e.g., dents, scrapes).

CAUTION

Improper placement of the banding material over the drum hoop may result in movement and banding material slipping down the drum. Do not place banding material over drum hoop.

[13] **PLACE** banding material around the drum over the installed duct tape and **ENSURE** banding material is not placed over the drum hoop.

[14] **TIGHTEN** and **BUCKLE** the banding material with a banding tool.

[15] **COVER** the banding buckle with duct tape to prevent bag tears.

[16] **ROLL DOWN** the remaining bag-off bag around drum.

NOTE *The following two steps may be performed just before loading the drum on the WCG drum lift.*

[17] **IF** items (e.g., gloves or tools) are to be bagged into the WCG with the Prepared Parent Drum,
THEN SECURE the items to the top of the Prepared Parent Drum.

[18] **WEIGH** the Prepared Parent Drum with items secured to the drum top, as applicable, and **RECORD** the Prepared Parent Drum Weight on Attachment 1.

[19] **IF** the Prepared Parent Drum Weight is greater than or equal to 624 lb,
THEN:

[A] **STOP** the work activity.

NOTE *The WCRRF Operations Center notifies the Transuranic (TRU) Waste Disposition Project (WDP) Operations Manager (OM) or designee and the Shift Operations Supervisor (SOS) of the discrepancy.*

[B] **NOTIFY** the WCRRF Operations Center of the discrepancy.

5. PERFORMANCE—PARENT WASTE CONTAINER PREPARATION (continued)

[C] **REQUEST** the applicable actions from the SOS or designee.

[20] **RECORD** the following information on the parent drum lid using a permanent marker:

- Parent drum number
- Parent drum weight
- Date
- Platform scale serial number
- Platform scale calibration due date

6. PERFORMANCE—WCG PARENT DRUM LOADING/UNLOADING

NOTE 1 *Radiological surveys may be performed as determined necessary [e.g., by an RP representative (e.g., RCT)] anytime during the performance of this procedure.*

NOTE 2 *All manual drum movement will be performed in accordance with Appendix 7, Manual Drum Movements Special Instructions and EP-DIV-Policy-20057, EWMO Health and Safety Policy-Manual Movement.*

6.1 WCG Drum Lift Daily Inspection

This sub-section is a stand-alone sub-section and may be performed independently of or in conjunction with other sub-sections.

This inspection is to be performed once each work day before the WCG drum lift is to be used to hoist a waste drum.

NOTE *The individual performing the WCG drum lift inspection **SHALL** be at a minimum a certified Qualified Crane Operator.*

Waste Handling Technician

[1] **OBTAIN** and **REVIEW** the previously completed copy of Attachment 2, WCRRF WCG Drum Lift Inspection Data Sheet.

[2] **OBTAIN** a new copy of attachment 2, and **RECORD** the inspection date on Attachment 2.

[3] **RECORD** any previously identified wire rope damage in Table 3-1 or Table 3-2, or N/A as applicable, on Attachment 2, and **CHECK** (√) applicable box in the Previously Identified Damage column in Table 3-1 or Table 3-2, as applicable, on Attachment 2.

[4] **RECORD** the number of threads exposed out the end of the shaft bolt locknut on the upper, middle, and lower pulley shaft bolts from the previous inspection on Attachment 2.

6.1 WCG Drum Lift Daily Inspection (continued)

[5] **DETERMINE** and **RECORD** on Attachment 2 the current number of threads exposed out the end of the shaft bolt locknut on the upper, middle, and lower pulley shaft bolts (see illustration below).

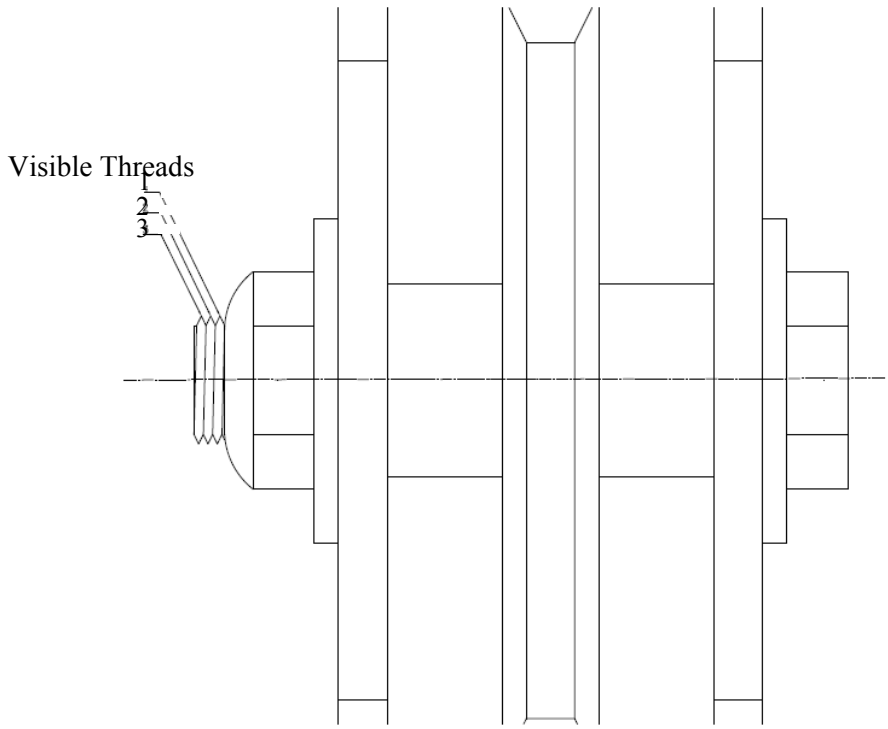

[6] **DETERMINE** whether the shaft bolt end is flush with or extends out of the outer end of the shaft bolt locknut, and **CHECK** (√) YES or NO on Attachment 2.

[7] **INSPECT** the upper, middle, and lower pulley shaft bolts for any signs of wear between the shaft bolt and the support flanges (e.g., shaft not perpendicular to the flange plate), and **CHECK** (√) SAT or UNSAT for each shaft bolt on Attachment 2.

WARNING

The drum lift pendant operator is to announce operation of the lift before raising or lowering the drum and all personnel are to stand clear and to the side of drum movement in order to prevent personnel injuries.

[8] **ENSURE** that the drum trolley is in the full-down position.

6.1 WCG Drum Lift Daily Inspection (continued)

WARNING

Cut resistant (e.g., leather or leather palm mechanics) gloves are to be worn while inspecting the drum trolley wire rope and the cloth is to be held loosely in order to prevent skin punctures resulting from broken wires of the wire rope.

[9] **INSPECT** the entire length of the exposed, upper wire rope from the top of the drum trolley to the wire rope hoist drum by loosely gripping the cloth (e.g., cheese cloth) while sliding the cloth along the length of the wire rope, and **CHECK** (√) YES or NO to indicate whether any new damage is identified on Attachment 2 to indicate whether any upper wire rope damage is discovered.

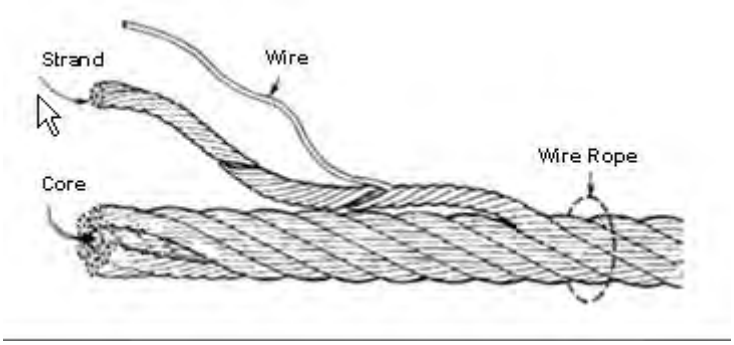

[10] **IF** the cloth snags on the wire rope,
THEN VISUALLY INSPECT the wire rope snag location for damage, and
DOCUMENT the results of the inspection including the location of the damage in Table 3-1, Upper Wire Rope Damage, on Attachment 2.

WARNING

The drum lift pendant operator is to announce operation of the lift before raising or lowering the lift and all personnel are to stand clear and to the side of drum movement in order to prevent personnel injuries.

[11] **ENSURE** that the drum trolley is in the full-up position.

6.1 WCG Drum Lift Daily Inspection (continued)

WARNING

Cut resistant (e.g., leather or leather palm mechanics) gloves are to be worn while inspecting the drum trolley wire rope and the cloth is to be held loosely in order to prevent skin punctures resulting from broken wires of the wire rope.

[12] **INSPECT** the entire length of the exposed, lower wire rope from the top of the drum trolley to the wire rope hoist by loosely gripping the cloth (e.g., cheese cloth) while sliding the cloth along the length of the wire rope, and **CHECK** (√) YES or NO to indicate whether any new damage is identified on Attachment 2 to indicate whether any lower wire rope damage is discovered.

[13] **IF** the cloth snags on the wire rope,
THEN VISUALLY INSPECT the wire rope snag location for damage, and **DOCUMENT** the results of the inspection including the location of the damage in Table 3-2, Lower Wire Rope Damage, on Attachment 2.

[14] **IF** there is more than <u>one</u> wire break within a 2-in. span along the wire rope,
THEN:

[A] **CHECK** (√) UNSAT for the wire rope inspection on Attachment 2.

[B] **GO** to Step 6.1[16].

[15] **CHECK** (√) SAT for the wire rope inspection on Attachment 2.

[16] **IF** UNSAT was checked (√) for any of the WCG inspections,
THEN:

[A] **STOP** the work activity.

[B] **RECORD** Printed name, signature, Z# and **DATE** on Attachment 2.

NOTE *The WCRRF Operations Center notifies the WDP SOM or designee and the Cognizant System Engineer (CSE) of the discrepancy.*

[C] **NOTIFY** the WCRRF Operations Center of the discrepancy.

[D] **DOCUMENT** the notifications and discrepancies in the Comments section of Attachment 2.

6.2 Parent Drum Loading

This sub-section is a stand-alone sub-section and may be performed independently of or in conjunction with other sub-sections.

Waste Handling Technician

[1] **ENSURE** that the prerequisite actions have been completed.

RCT

[2] **PERFORM** radiological surveys as necessary during the waste container handling evolutions.

Waste Handling Technician

[3] **IF** radiological contamination is detected,
THEN FOLLOW the instructions of the RCT and RWP.

[4] **RECORD** the Processing Date (current date) on Attachment 1, WCRRF WCG Waste Processing Data Sheet.

[5] **IF** lead blankets are to be used as radiological shielding on the parent drum,
THEN:

[A] **WEIGH** the lead blankets, as necessary, and **RECORD** the lead blanket's weight on Attachment 1.

[B] **SUM** the Lead Blanket Weights and the Prepared Parent Drum Weight, and **RECORD** the Total Prepared Parent Drum Weight (drum and lead blankets) on Attachment 1.

[C] **GO** to Step 6.2[7].

[6] **RECORD** the Total Prepared Parent Drum Weight (parent drum weight) on Attachment 1.

[7] **($) DETERMINE** whether the Total Parent Drum Weight is less than 624 lb, and **CHECK** (√) SAT or UNSAT for the Total Parent Drum weighing less than 624 lb on Attachment 1. (SR 4.5.1)

6.2 Parent Drum Loading (continued)

[8] **IF** the Total Parent Drum Weight is greater than or equal to 624 lb,
THEN:

[A] **STOP** the work activity.

NOTE *The WCRRF Operations Center notifies the TRU WDP OM or designee and the SOS of the drum status.*

[B] **NOTIFY** the WCRRF Operations Center, of the drum status.

[C] **REQUEST** the applicable actions from the SOS or designee.

NOTE *P101-25 provide instructions for a conducting a critical lift.*

[9] **($) IF** the prepared parent drum is a degraded or loss of integrity drum, (AC 5.10.3.1)
OR the parent drum weight is greater than 468 lb,
THEN ENSURE that the prepared parent drum is loaded in compliance with P101-25 Attachment B Critical Lift plan and this sub-section.

[10] **ENSURE** that the drum lift key has been obtained from the key box.

[11] **ENSURE** that the drum lift key has been inserted, and has been turned to ON in order to establish power to the drum lift.

[12] **ENSURE** that the drum lift has been lowered to the lower limit switch or until the bellyband of the lift cradle can grasp the drum evenly using the drum lift pendent.

[13] **IF** the WCG parent drum port cover is present,
THEN REMOVE the WCG parent drum port cover, and **SET** the WCG parent drum port cover aside.

[14] **ENSURE** that respiratory protection is worn as required by the applicable RWP.

[15] **LOOSEN** the drum closure ring bolt jam nut, as necessary, <u>without loosening the closure ring bolt</u>.

6.2 Parent Drum Loading (continued)

NOTE *The retaining clip (e.g., E-clip) must be an ML-2 component.*

[16] **INSPECT** the four drum lift hinge pins to determine whether all hinge pins have retaining clips (e.g., E-clips) attached to the bottom of the hinge pins and **CHECK** SAT or UNSAT on Attachment 1.

[17] **IF** a retaining clip is missing from a hinge pin,
THEN:

[A] **INSPECT** the hinge pin for damage and **DOCUMENT** deficiencies including hinge pin location in the Comments section of Attachment 1.

[B] **IF** the hinge pin is damaged or the hinge pin does **NOT** completely pass through the hinge,
THEN:

[a] **STOP** the work activity.

[b] **NOTIFY** the WCRRF Operations Center of the hinge pin status.

[c] **REQUEST** the applicable actions from the SOS or designee, and **DOCUMENT** the condition and actions taken in the Comments section of Attachment 1.

[C] **ATTACH** a retaining clip to the hinge pin, ensuring that the clip is properly seated in the groove at the bottom of the hinge pin.

[D] **DOCUMENT** initials, Z number, and date or N/A on Attachment 1 to indicate that the retaining clip was replaced.

[18] **POSITION** the prepared parent drum on the drum lift with the prepared parent drum closure ring bolt accessible for lid removal when the drum closure ring is inside of the WCG.

[19] **CLOSE** and **SECURE** the bellyband on the prepared parent drum, ensuring that the bag-off sleeve does <u>not</u> get caught on the bellyband.

[20] **ENSURE** that the retaining clips are properly seated in the groove at the bottom of the hinge pins.

6.2 Parent Drum Loading (continued)

WARNING

Failure to ensure the Trolley Clamp is positioned next to the WCG prior to lowering or raising the drum lift could lead to equipment damage and personnel injury.

[21] **IF** the Trolley Rail clamp is to be used,
AND is not on the drum rail,
THEN PLACE the trolley rail clamp on the rail and **POSITION** next to the WCG.

[22] **RAISE** the prepared parent drum to the WCG parent drum port using the drum lift pendent, leaving an adequate gap (approximately 12 in.) to attach the bag-off sleeve to the WCG parent drum port.

[23] **BAG ON** the prepared parent drum to the WCG parent drum port in accordance with section 7.1, Parent Drum Bag On, and **RETURN** to the following step.

WARNING

Downward movement of the parent drum could result in the drum bag-off bag separating from the WCG drum port and resulting in the spread of radiological contamination.

[24] **TURN** the drum lift key to OFF, and **REMOVE** the drum lift key, as applicable.

[25] **PLACE** the drum lift key in the key box, as applicable.

6.2 Parent Drum Loading (continued)

[26] **IF** the parent drum is to remain attached to the WCG overnight,
THEN OBTAIN the Environmental and Waste Management Facility Operations-Facility Operations Director (EWMO-FOD) approval to leave the parent drum attached to the WCG overnight, and **DOCUMENT** the approval on Attachment 1.

[27] **IF** the EWMO-FOD does **NOT** approve leaving a parent drum attached to the WCG overnight,
THEN ENSURE that the parent drum is removed before the end of the work day.

[28] **PROCESS** the waste in the parent drum in accordance with Section 10, WCG Waste Processing.

6.3 Parent Drum Unloading

This sub-section is a stand-alone sub-section and may be performed independently of or in conjunction with other sub-sections.

Waste Handling Technician

[1] **ENSURE** that the prerequisite actions have been completed.

[2] **ENSURE** that the parent drum has been bagged off of the WCG in accordance with Section 7.2, Parent Drum Bag Off.

RCT

[3] **PERFORM** radiological surveys as necessary during the waste container handling evolutions.

Waste Handling Technician

[4] **IF** radiological contamination is detected,
THEN FOLLOW the instructions of the RCT and RWP.

[5] **ENSURE** that the drum lift key has been obtained from the key box.

[6] **ENSURE** that the drum lift key has been inserted, and **TURN** the drum lift key to ON in order to establish power to the drum lift.

6.3 Parent Drum Unloading (continued)

WARNING

The drum lift pendant operator is to announce operation of the lift before raising or lowering the drum and all personnel are to stand clear and to the side of drum movement in order to prevent personnel injuries.

[7] **POSITION** a drum dolly to receive the parent drum.

WARNING

Personnel SHALL <u>not</u> place any portion of the body (e.g., hands or arms) under an elevated load in order to prevent serious personal injury.

[8] **LOWER** the parent drum down onto the drum dolly using the drum lift pendent.

[9] **OPEN** the drum bellyband, and **UNLOAD** the parent drum from the drum lift.

[10] **IF** no additional drums are to be loaded with the WCG drum lift,
THEN:

[A] **SECURE** the drum bellyband.

[B] **RAISE** the drum lift to the desired height for stowing using the drum lift pendent.

[C] **TURN** the drum lift key to OFF, and **REMOVE** the drum lift key.

[D] **PLACE** the drum lift key in the key box.

[11] **TAPE** the bagged off parent drum horsetail using vinyl tape.

[12] **PLACE** a layer of containment (e.g., the cutoff end of the parent drum bagged off bag or piece of plastic) over the drum lid.

[13] **TAPE** the entire parent drum lid using vinyl tape.

6.3 Parent Drum Unloading (continued)

NOTE 1 *The RCRA Hazardous Waste Codes of a parent container do not apply to the empty parent container or the empty parent container label when the empty parent container satisfies the RCRA definition of an empty container in 40 CFR 261.7, Residues of Hazardous Waste in Empty Containers.* *http://edocket.access.gpo.gov/cfr_2009/julqtr/pdf/40cfr261.7.pdf.*

NOTE 2 *The following steps may be performed at a time that is operationally convenient.*

[14] **OVERPACK** the empty parent drum in accordance with EP-WCRR-WO-DOP-0236, WCRRF Loading/Unloading SWB or 85-gal Drum.

[15] **MOVE** the empty parent drum to a transportainer in accordance with EP-WCRR-WO-DOP-0202, WCRRF and Building TA-50-69 Waste Container Receipt, Movement, and Transfer.

[16] **ENSURE** that the Inventory Control Personnel have been notified that the empty parent drum has been removed from Building TA-50-69.

7. PERFORMANCE—WCG PARENT DRUM BAG-ON/BAG-OFF OPERATIONS

NOTE 1 *Radiological surveys may be performed as determined necessary [e.g., by an RP representative (e.g., RCT)] anytime during the performance of this procedure.*

NOTE 2 *All manual drum movement will be performed in accordance with Appendix 7, and EP-DIV-Policy-20057, EWMO Health and Safety Policy-Manual Movement.*

7.1 Parent Drum Bag On

This sub-section is a stand-alone sub-section and may be performed independently of or in conjunction with other sub-sections.

Waste Handling Technician

[1] **ENSURE** that the prerequisite actions have been completed.

[2] **WEAR** respiratory protection as required by the applicable RWP.

RCT

[3] **PERFORM** radiological surveys as necessary during the waste container handling evolutions.

Waste Handling Technician

[4] **IF** radiological contamination is detected,
THEN FOLLOW the instructions of the RCT and RWP.

[5] **ENSURE** the parent drum has been loaded onto the WCG in accordance with Section 6.2, Parent Drum Loading.

[6] **ENSURE** that the WCG has been wiped down to reduce radiological contamination.

[7] **SET UP** a portable HEPA-filter exhaust system (MAC-21) in order to increase local airflow at the site of the horsetail during the cutting operation.

[8] **REMOVE** the retaining band from the WCG parent drum port bag-off stub.

[9] **VISUALLY INSPECT** the WCG parent drum port bag-off stub for damage (e.g., tears).

7.1 Parent Drum Bag On (continued)

[10] **IF** the WCG parent drum port bag-off stub is damaged (e.g., tears),
THEN:

[A] **REPAIR** the damage (e.g., tears) using vinyl tape.

[B] **REQUEST** an RCT survey for radiological contamination.

[C] **IF** radiological contamination is detected,
THEN FOLLOW the instructions of the RCT and RWP.

[11] **SLIDE** the bag-off stub down to the port opening side of the ring closest to the WCG.

[12] **SWIPE** around the WCG parent drum port with a maslin smear, and **REQUEST** an RCT monitor the swipe for radiological contamination.

[13] **IF** radiological contamination is detected,
THEN FOLLOW the instructions of the RCT and RWP.

NOTE *The new bag-on bag is attached to the parent drum.*

[14] **SLIDE** the new bag-on bag over the old bag-on bag stub to the inner ring of the WCG parent drum port.

[15] **APPLY** vinyl tape to the new bag-on bag where the retaining band buckle is to be placed.

[16] **SECURE** the new bag-on bag with the retaining band.

[17] **REMOVE** the bag-off stub from the WCG parent drum port, and **DROP** the bag-off stub into the glovebox.

7.1 Parent Drum Bag On (continued)

WARNING

The drum lift pendant operator is to announce operation of the lift before raising or lowering the drum and all personnel are to stand clear and to the side of drum movement in order to prevent personnel injuries.

[18] **ALTERNATELY RAISE** the parent drum and **GUIDE** the bag-on bag to prevent damage to the bag-on bag until the parent drum has been raised to the upper limit switch or until the drum is adequately inserted.

NOTE *The Trolley Rail Clamp is used at the discretion of the PIC, and/or when processing heavy drums to act as a rail stop to restrict forward drum movement when removing heavy items from drum into glovebox.*

[19] **IF** the Trolley Rail Clamp is to be used,
THEN:

[A] **SLIDE** the Trolley Rail Clamp against the drum trolley rail assembly next to the lifting fixture.

[B] **TIGHTEN** the Trolley Rail clamp handle clockwise to secure the clamp against the drum trolley.

7.2 Parent Drum Bag Off

This sub-section is a stand-alone sub-section and may be performed independently of or in conjunction with other sub-sections.

Waste Handling Technician

[1] **ENSURE** that the prerequisite actions have been completed.

[2] **WEAR** respiratory protection as required by the applicable RWP.

RCT

[3] **PERFORM** radiological surveys as necessary during the waste container handling evolutions.

7.2 Parent Drum Bag Off (continued)

Waste Handling Technician

[4] **IF** radiological contamination is detected,
THEN FOLLOW the instructions of the RCT and RWP.

[5] **IF** Trolley Rail Clamp was used,
THEN LOOSEN handle counterclockwise and **SLIDE** the Trolley Rail Clamp away from the drum trolley (towards the WCG).

[6] **PLACE** the drum lid and drum closure ring bolt are on the parent waste drum.

[7] **IF** the parent drum closure ring **CANNOT** be properly attached to the parent drum,
AND the parent drum is empty,
THEN:

[A] **AFFIX** the closure ring, if possible, to the parent drum and **TAPE** the parent drum lid onto the drum using vinyl tape or equivalent.

[B] **GO** to Step 7.2[11].

NOTE *The removal of a parent drum from the WCG which contains waste material must be performed as a critical lift.*

[8] **IF** the parent drum closure ring **CANNOT** be properly attached to the parent drum,
AND the parent drum contains waste material,
THEN:

[A] **STOP** the activity and place waste material in a safe configuration (e.g., cover with a fire blanket).

[B] **NOTIFY** supervision and the WCRRF Operations Center of the discrepancy and **REQUEST** the applicable actions.

[9] **ENSURE** that the drum closure ring bolt jam nut is tightened against the non-threaded lug of the drum closure ring.

[10] **ENSURE** that duct tape has been placed on the drum closure ring bolt in order to prevent damage to the bag-off sleeve.

[11] **ENSURE** that the WCG has been wiped down to reduce radiological contamination.

7.2 Parent Drum Bag Off (continued)

[12] **SET UP** a portable HEPA-filter exhaust system (MAC-21) to increase local airflow at the site of the horsetail during the cutting operation.

[13] **OBTAIN** the drum lift key from the key box, as applicable.

[14] **INSERT** the drum lift key, and **TURN** the drum lift key to ON in order to establish power to the drum lift, as applicable.

WARNING

The drum lift pendant operator is to announce operation of the lift before raising or lowering the drum and all personnel are to stand clear and to the side of drum movement in order to prevent personnel injuries.

[15] **LOWER** the parent drum sufficiently to create a horsetail using the drum lift pendent.

[16] **INSPECT** the bag-off bag for damage (e.g., tears).

[17] **IF** bag-off bag is damaged (e.g., tears),
THEN:

[A] **REPAIR** the damage (e.g., tears) using vinyl tape.

[B] **REQUEST** an RCT survey for radiological contamination.

[C] **IF** radiological contamination is detected,
THEN FOLLOW the instructions of the RCT and RWP.

[18] **MIST** inside of the bag-off bag with spray cleaner and **RUB** the bag-off bag together to ensure the complete coverage of the spray cleaner in order to control contamination.

[19] **SQUEEZE** as much air as possible out of the bag-off bag.

[20] **GATHER** the bag-off bag and **COMPRESS** the bag-off bag in order to create a horsetail approximately 8 to 10 in. long.

[21] **TIGHTLY SECURE** the horsetail with vinyl tape or filament tape.

7.2 Parent Drum Bag Off (continued)

[22] **FIRMLY ATTACH** two binding ties near the center of the horsetail, approximately 6 in. apart.

[23] **IF** bagging off the last parent drum for the work day,
THEN FIRMLY ATTACH a second binding tie approximately 2 in. from the center of the horsetail on the WCG side of the horsetail.

NOTE *The excess part of the binding tie protruding through the binding tie latch is not to be cut off.*

[24] **COVER** the attached binding ties with vinyl tape.

Waste Handling Technician Three

[25] **POSITION** the horsetail cutters between the binding ties of the horsetail.

Waste Handling Technician One

[26] **GRASP** the top of horsetail.

Waste Handling Technician Two

[27] **GRASP** the bottom of horsetail.

WARNING

Extremities SHALL not be placed inside the jaws of the cutting tool in order to prevent personnel injury due to pinching.

Waste Handling Technician Three

[28] **CUT** the horsetail between the binding ties.

Waste Handling Technician One and Two

[29] **SIMULTANEOUSLY COVER** the cut stubs of the bag-off bag with vinyl tape.

[30] **ENSURE** that the cut-stubs have been covered with a final layer of vinyl tape, as directed by an RCT.

7.2 Parent Drum Bag Off (continued)

NOTE 1 *Used cheesecloth are to be disposed of as compactable waste.*

NOTE 2 *The following step may be performed out of sequence.*

Waste Handling Technician Three

[31] **WIPE** down the cutters used to cut the horsetail, place the cutters in a holder, and place the cutters in the designated staging area.

NOTE *Used cheesecloth are to be disposed of in the compactable waste container.*

Waste Handling Technician

[32] **DECONTAMINATE**, as necessary, in accordance with RCT instructions.

[33] **REMOVE** the empty parent drum from the WCG drum lifting device in accordance with Section 6.3, Parent Drum Unloading.

8. PERFORMANCE—WCG DAUGHTER DRUM, BAGPORT, OR GLOVEPORT BAG-ON/BAG-OFF OPERATIONS

NOTE 1 *Radiological surveys may be performed as determined necessary [e.g., by an RP representative (e.g., RCT)] anytime during the performance of this procedure.*

NOTE 2 *All manual drum movement will be performed in accordance with Appendix 7, and EP-DIV-Policy-20057, EWMO Health and Safety Policy-Manual Movement.*

8.1 Bag On Daughter Drum, Bagport, or Gloveport

This sub-section is a stand-alone sub-section and may be performed independently of or in conjunction with other sub-sections.

NOTE *This section provides instructions for bagging onto the WCG at a daughter drum port, bagport, or gloveport.*

Waste Handling Technician

[1] **ENSURE** that the prerequisite actions have been completed.

[2] **IF** a daughter drum is to be bagged onto the WCG,
THEN ENSURE that the daughter drum has been prepared in accordance with EP-WCRR-WO-DOP-0221.

[3] **WEAR** respiratory protection as required by the applicable RWP.

RCT

[4] **PERFORM** radiological surveys as necessary during the waste container handling evolutions.

Waste Handling Technician

[5] **IF** radiological contamination is detected,
THEN FOLLOW the instructions of the RCT and RWP.

[6] **ENSURE** that the WCG has been wiped down to reduce radiological contamination.

[7] **IF** directed by an RCT to establish a portable HEPA-filter exhaust system,
THEN SET UP a portable HEPA-filter exhaust system (MAC-21)in order to increase the local airflow at the site of the horsetail during the cutting operation.

[8] **REMOVE** the retaining band from the bag-off stub.

8.1 Bag On Daughter Drum, Bagport, or Gloveport (continued)

[9] **VISUALLY INSPECT** under the retaining band of the previous drum/bagport/gloveport bag-off stub for damage (e.g., tears).

[10] **IF** the previous drum/bagport/gloveport bag-off stub is damaged (e.g., tears),
THEN SEAL the damaged area with vinyl tape.

[11] **SLIDE** the bag-off stub down to the port opening side of the ring closest to the WCG.

[12] **SWIPE** around the port with a maslin smear, and **REQUEST** an RCT monitor the swipe for radiological contamination.

[13] **IF** radiological contamination is detected,
THEN FOLLOW the instructions of the RCT and RWP.

[14] **SLIDE** a new bag-on bag over the bag-off stub.

[15] **ADHERE** vinyl tape to the new bag-on bag where the retaining band buckle is to be placed.

[16] **SECURE** the new bag with the retaining band.

[17] **REMOVE** the bag-off bag stub and drop the bag-off bag stub into the daughter drum/bagport bag/gloveport bag, as applicable.

[18] **IF** bagging on a daughter drum,
THEN:

[A] **MOVE** the drum from the drum dolly to the vertical lift table.

[B] **MANUALLY RAISE** the drum to the appropriate height.

8.2 Bag Off Daughter Drum

This sub-section is a stand-alone sub-section and may be performed independently of or in conjunction with other sub-sections.

NOTE *This section provides instructions for bagging off a daughter drum from the WCG.*

Waste Handling Technician

[1] **ENSURE** that the prerequisite actions have been completed.

[2] **WEAR** respiratory protection as required by the applicable RWP.

RCT

[3] **PERFORM** radiological surveys as necessary during the waste container handling evolutions.

Waste Operator

[4] **IF** radiological contamination is detected,
THEN FOLLOW the instructions of the RCT and RWP.

[5] **ENSURE** that the WCG has been wiped down to reduce radiological contamination.

[6] **SET UP** a portable HEPA-filter exhaust system (MAC-21) in order to increase the local airflow at the site of the horsetail during the cutting operation.

[7] **MANUALLY LOWER** the vertical lift table.

[8] **INSPECT** the bag-off bag for damage (e.g., tears).

[9] **IF** the bag-off bag is damaged (e.g., tears),
THEN:

[A] **REPAIR** the damage (e.g., tears) using vinyl tape.

[B] **REQUEST** an RCT survey for radiological contamination.

[C] **IF** radiological contamination is detected,
THEN FOLLOW the instructions of the RCT and RWP.

8.2 Bag Off Daughter Drum (continued)

WARNING

Proper lifting techniques and buddy system SHALL be used when moving a daughter drum from the lift table to the drum dolly in order to prevent personnel injury and to prevent separating the daughter drum bag-off bag from the WCG daughter drum port.

NOTE *A VersaLift may be used to assist the lifting of a drum off of the vertical lift table.*

[10] **MOVE** the drum from the vertical lift table to a drum dolly.

[11] **MIST** inside of the bag-off bag with spray cleaner and **RUB** the bag-off bag together to ensure the complete coverage of the spray cleaner in order to control contamination.

[12] **SQUEEZE** as much air as possible out of the bag-off bag.

[13] **GATHER** the bag-off bag.

[14] **ROTATE** the drum <u>or</u> **COMPRESS** the bag-off bag (as applicable) in order to create a horsetail approximately 8 to 10 in. long.

[15] **TIGHTLY SECURE** the horsetail with vinyl tape or filament tape.

[16] **FIRMLY ATTACH** two binding ties near the center of the horsetail, approximately 6 in. apart.

NOTE *The excess part of the binding tie protruding through the binding tie latch is <u>not</u> to be cut off.*

[17] **COVER** the attached binding ties with vinyl tape.

Waste Handling Technician Three

[18] **POSITION** the horsetail cutters between the binding ties of the horsetail.

Waste Handling Technician One

[19] **GRASP** top of horsetail.

8.2 Bag Off Daughter Drum (continued)

Waste Handling Technician Two

[20] **GRASP** the bottom of the horsetail.

WARNING

Extremities SHALL <u>not</u> be placed inside the jaws of the cutting tool in order to prevent personnel injury due to pinching.

Waste Handling Technician Three

[21] **CUT** the horsetail between the binding ties.

Waste Handling Technician One and Two

[22] **SIMULTANEOUSLY COVER** the cut stubs of the bag-off bag with vinyl tape.

[23] **ENSURE** that the cut-stubs have been covered with a final layer of vinyl tape, as directed by an RCT.

NOTE 1 *Used cheesecloth **SHALL** be disposed of as compactable waste.*

NOTE 2 *The following step may be performed out of sequence.*

Waste Handling Technician Three

[24] **WIPE** down the cutters used to cut the horsetail, place the cutters in a holder, and place the cutters in the designated staging area.

Waste Handling Technician

[25] **IF** the bag-off bag has a filter that is covered with tape,
THEN:

[A] **REMOVE** the tape from bag filter.

[B] **REQUEST** an RCT survey for radiological contamination.

[C] **IF** radiological contamination is detected,
THEN FOLLOW the instructions of the RCT and RWP.

8.2 Bag Off Daughter Drum (continued)

[26] **IF** a POC was bagged off of the WCG,
THEN GO to Step 10.2[13].

NOTE 1 *Waste containers with liquids (any amount or configuration) that have not been solidified (absorbed) must be managed on secondary containment pallets and have a FREE LIQUID label affixed.*

NOTE *All parent drum RCRA Hazardous Waste Codes are not assigned to a daughter drum when the reason (item) for assigning a RCRA Hazardous Waste Code to the parent drum has not been placed into the daughter drum. The WMC can assist with assigning the appropriate RCRA Hazardous Waste Codes to a drum.*

[27] **CLOSE** the daughter drum in accordance with EP-WCRR-WO-DOP-0221.

[28] **ENSURE** that the Inventory Control Personnel have been notified that daughter drums and an empty parent drum have been generated in Building TA-50-69.

9. PERFORMANCE—ITEM BAG-IN/BAG-OUT OPERATIONS

NOTE *Radiological surveys may be performed as determined necessary [e.g., by an RP representative (e.g., RCT)] anytime during the performance of this procedure.*

9.1 WCG Item Bag-Out

This sub-section is a stand-alone sub-section and may be performed independently of or in conjunction with other sub-sections.

Waste Handling Technician

[1] **ENSURE** that the prerequisite actions have been completed.

[2] **WEAR** respiratory protection as required by the applicable RWP.

RCT

[3] **PERFORM** radiological surveys as necessary during the waste container handling evolutions.

Waste Handling Technician

[4] **IF** radiological contamination is detected,
THEN FOLLOW the instructions of the RCT and RWP.

[5] **ENSURE** that a portable CAM is placed in the vicinity of the filtered bagout bag during WCG operations as directed by RP-1.

[6] **IF** a bag is required on the WCG port,
THEN:

[A] **ENSURE** that the WCG has been wiped down to reduce radiological contamination.

[B] **SET UP** a portable HEPA-filter exhaust system (MAC-21) and elephant trunk as close as possible to the filtered bagout bag in order to increase the local airflow at the site of the horsetail during the cutting operation.

NOTE *Glovebox negative pressure **SHALL** be used to the extent possible in order to remove excess air from the filtered bag-out bag during bagout operations.*

[C] **REMOVE** the retaining band from the drum/bagport/gloveport bag-out stub.

9.1 WCG Item Bag-Out (continued)

[D] **VISUALLY INSPECT** under the retaining band of the previous drum/bagport/gloveport bag-out stub for damage (e.g., tears).

[E] **IF** the previous drum/bagport/gloveport bag-out stub is damaged (e.g., tears), **THEN SEAL** the damaged area with vinyl tape.

[F] **SLIDE** the bag-out stub down to the outer ring of the port (drum, bagport, or gloveport).

[G] **SWIPE** around the port with a maslin smear, and **REQUEST** an RCT monitor the swipe for radiological contamination.

[H] **IF** radiological contamination is detected,
THEN FOLLOW the instructions of the RCT and RWP.

[I] **SLIDE** new bag-on bag over the bag-out stub.

[J] **ADHERE** vinyl tape to the new bag-on bag where the retaining band buckle is to be placed.

[K] **SECURE** the new bag-on bag with the retaining band.

[L] **REMOVE** the bag-out bag stub and drop the bag-out bag stub into the daughter drum/bagport bag/gloveport bag, as applicable.

[7] **ENSURE** that the WCG has been wiped down to reduce radiological contamination.

[8] **ENSURE** a portable HEPA-filter exhaust system (MAC-21) and elephant trunk are set up as close as possible to the filtered bagout bag in order to increase the local airflow at the site of the horsetail during the cutting operation.

[9] **SLIDE** the item to be bagged out to the end of the bag-out bag.

[10] **INSPECT** the bag-out bag for damage (e.g., tears).

[11] **IF** the bag-out bag is damaged (e.g., tears),
THEN:

[A] **REPAIR** the damage (e.g., tears) using vinyl tape.

9.1 WCG Item Bag-Out (continued)

[B] **REQUEST** an RCT survey for radiological contamination.

[C] **IF** radiological contamination is detected,
THEN FOLLOW the instructions of the RCT and RWP.

[12] **MIST** inside of the bag-out bag with spray cleaner and **RUB** the bag-out bag together to ensure the complete coverage of the spray cleaner in order to control contamination.

[13] **SQUEEZE** as much air as possible out of the bag-out bag.

[14] **GATHER** the bag-out bag.

[15] **ROTATE** the drum <u>or</u> **COMPRESS** the bag-out bag (as applicable) in order to create a horsetail approximately 8 to 10 in. long.

[16] **TIGHTLY SECURE** the horsetail with vinyl tape or filament tape.

[17] **ENSURE** that the horsetail is located far enough away from the filtered bagout bag to avoid creasing, folding, or otherwise challenging the integrity of the filter.

[18] **FIRMLY ATTACH** two binding ties near the center of the horsetail, approximately 6 in. apart.

[19] **IF** bagging out the last item for the work day,
THEN FIRMLY ATTACH a second binding tie approximately 2 in. from the center of the horsetail on the WCG side of the horsetail.

NOTE *The excess part of the binding tie protruding through the binding tie latch tie is <u>not</u> to be cut off.*

[20] **COVER** the attached binding ties with vinyl tape.

Waste Handling Technician Three

[21] **POSITION** the horsetail cutters between the binding ties of the horsetail.

Waste Handling Technician One

[22] **GRASP** top of horsetail.

9.1 WCG Item Bag-Out (continued)

Waste Handling Technician Two

[23] **GRASP** bottom of horsetail.

WARNING

Extremities SHALL <u>not</u> be placed inside the jaws of the cutting tool in order to prevent personnel injury due to pinching.

Waste Handling Technician Three

[24] **CUT** the horsetail between the binding ties.

Waste Handling Technician One and Two

[25] **SIMULTANEOUSLY COVER** the cut stubs of the bag-out bag with vinyl tape.

[26] **ENSURE** that the cut-stubs have been covered with a final layer of vinyl tape, as directed by an RCT.

NOTE 1 *Used cheesecloth **SHALL** be disposed of as compactable waste.*

NOTE 2 *The following step may be performed out of sequence.*

Waste Handling Technician Three

[27] **WIPE** down the cutters used to cut the horsetail, and **PLACE** the cutters in a holder, and **PLACE** the cutters in the designated staging area.

Waste Handling Technician

[28] **IF** the bag-out bag has a filter that is covered with tape,
THEN:

[A] **REMOVE** the tape from bag filter.

[B] **REQUEST** an RCT survey for radiological contamination.

[C] **IF** radiological contamination is detected,
THEN FOLLOW the instructions of the RCT and RWP.

9.2 WCG Introductory Port

This sub-section is a stand-alone sub-section and may be performed independently of or in conjunction with other sub-sections.

NOTE *This sub-section provides instructions for introducing items into the WCG.*

WARNING

Items are not to be removed from the WCG using the airlock since items placed in the airlock from the interior of the WCG are possibly radiologically contaminated.

Waste Handling Technician

[1] **ENSURE** that the prerequisite actions have been completed.

[2] **PREPARE** the area in accordance with RCT instructions.

[3] **WEAR** respiratory protection as required by the applicable RWP.

RCT

[4] **PERFORM** radiological surveys as necessary during the waste container handling evolutions.

Waste Handling Technician

[5] **IF** radiological contamination is detected,
THEN FOLLOW the instructions of the RCT and RWP.

WARNING

Both WCG airlock doors are to remain closed until they must be opened to introduce an item into the WCG in order to prevent releasing radiological contamination out of the WCG.

[6] **ENSURE** that both WCG Introductory Port doors are securely closed.

9.2 WCG Introductory Port (continued)

[7] **OPEN** the outer WCG Introductory Port door.

WARNING

Items are to be placed inside of the WCG airlock in a manner that does <u>not</u> disturb the WCG airlock surfaces in order to mitigate the spread of radiological contamination.

[8] **GENTLY PLACE** the item to be introduced into the WCG airlock.

[9] **CLOSE** the outer WCG Introductory Port door.

[10] **OPEN** the inner WCG Introductory Port door.

[11] **REMOVE** the item from the WCG Introductory Port and **PLACE** the item in the WCG.

[12] **CLOSE** the inner WCG Introductory Port door.

[13] **VERIFY** that both WCG Introductory Port doors are securely closed.

10. PERFORMANCE—WCG WASTE PROCESSING

This section is a stand-alone section and may be performed independently of or in conjunction with other Performance sections.

NOTE 1 *Radiological surveys may be performed as determined necessary [e.g., by an RP representative (e.g., RCT)] anytime during the performance of this procedure.*

NOTE 2 *The WCATS desktop application WCRR-REMED is performed in conjunction with this section.*

NOTE 3 *All manual drum movement will be performed in accordance with Appendix 7, Manual Drum Movements Special Instructions and EP-DIV-Policy-20057, EWMO Health and Safety Policy-Manual Movement.*

10.1 WCG Waste Processing Preparation

Waste Handling Technician

[1] **ENSURE** that the prerequisite actions have been completed.

[2] **ENSURE** that the battery charger for the cordless drill in the WCG has been unplugged.

[3] **ENSURE** that the parent drum has been bagged onto the WCG in accordance with Section 7.1, Parent Drum Bag On.

NOTE *The following step may be performed out of sequence.*

[4] **ENSURE** that the daughter drums have been bagged onto the WCG in accordance with Section 8.1, Bag On Daughter Drum, Bagport, or Gloveport, and **RECORD** the following information on Attachment 1:

- Daughter Drum Number
- Daughter Drum Filter Number
- Daughter Drum Bag Filter Number
- Daughter Drum Purchase Order Number

[5] **IF** VE activities are to occur,
THEN ENSURE that CCP-TP-113, Standard Contact Handled Waste Visual Examination, is performed concurrently with this procedure.

10.1 WCG Waste Processing Preparation (continued)

[6] **SLOWLY REMOVE** the parent drum lid, being prepared to close the lid if there are unexpected conditions.

[7] **EXAMINE** the contents of the parent drum, and **DETERMINE** whether the contents of the drum have any unexpected items.

[8] **IF** any unexpected items are present in the parent drum,
THEN:

[A] **CLOSE** the parent drum.

[B] **NOTIFY** supervision and the WCRRF Operations Center of the discrepancy, and **REQUEST** the applicable actions.

[C] **DOCUMENT** the discrepancy and applicable actions in the Comments section of Attachment 1.

NOTE *Placing the parent drum lid over the waste items being surveyed is a simulation of the waste items being inside of a drum and provides a representation of the expected dose rate outside of the drum in order to determine whether the dose rate may exceed 190 mrem/hr and is the desired survey method.*

[9] **ENSURE** that a drum lid is placed over the waste items to be surveyed, as necessary, and **REQUEST** an RCT perform radiological surveys of the items being removed from the parent drum.

NOTE 1 *Unvented, Sealed waste packages are those waste packages that have a positive locking mechanism, such as a gasket with drum closure ring or a screw top lid (with no other openings) to seal the lid to the waste package.*

[10] **IF** the parent drum contains an unvented, sealed waste package,
THEN:

[A] **RECORD** the parent drum identification number on Attachment 3, WCRRF WCG Breaching (Opening) Unvented, Sealed Waste Packages.

10.1 WCG Waste Processing Preparation (continued)

NOTE *Multiple copies of Attachment 3 may be required for parent drums containing more than four unvented, sealed waste packages that are 5- to 30 gal. Only a single copy of Attachment 3 is necessary for parent drums with multiple unvented, sealed waste packages that are less than 5 gal.*

[B] **CHECK** (√) the applicable box on Attachment 3 to indicate the type of unvented, sealed waste package (e.g., Metal 5- to 30-gal, Non-metallic 5- to 30-gal, or < 5-gal).

NOTE *The cordless drill is considered to be a spark-producing tool and is to be placed aside in the WCG, and <u>not</u> handled, when non-sparking tools are required.*

[C] **($) ENSURE** that non-sparking tools are available for use in the WCG, and **ENSURE** that the availability of the non-sparking tools has been documented on Attachment 3. (SAC 5.10.1.6.1).

NOTE *Administrative Control Lock Log Sheet form 10.4 of EP-DIV-AP-0117* ***SHALL*** *be completed anytime the lock is placed or removed for WCG receptacles lockout.*

[D] **($) ENSURE** that the WCG electrical receptacles have been de-energized and locked open/off with an administrative lock, and **CHECK (√)** SAT or UNSAT on Attachment 3, and **MAKE** an entry on the Administrative Control Log Sheet to document that the WCG electrical receptacles are locked open/off. (SAC 5.10.1.6.2)

10.1 WCG Waste Processing Preparation (continued)

NOTE 1 *A proper ground requires that all ends of the grounding strap be firmly attached to a clean-bare metal surface.*

NOTE 2 *Attachment 4,WCRRF WCG Breaching (Opening) Metal 5- to 30-gal Unvented-Sealed Waste Packages Surveillance, is completed to document the operator and independent verifier installing the grounding devices within TA-50-69.*

NOTE 3 *The following step is to be performed by an operator and then independently verified by a second operator.*

NOTE 4 *Separate copies of Attachment 4 are required for each waste package.*

Waste Handling Technician

[E] **IF** the waste package is a METAL 5- to 30-gal waste package,
THEN:

[a] **RECORD** the parent drum identification number on Attachment 4.

[b] **($) ENSURE** that the parent drum has been properly grounded to the WCG using a grounding strap in the WCG, and **CHECK** (√) SAT or UNSAT on Attachment 4 to document that the grounding strap was attached. (SR 4.6.1)

Independent Verifier

[c] **VERIFY** that the parent drum has been properly grounded to the WCG using a grounding strap in the WCG, and **CHECK** (√) SAT or UNSAT on Attachment 4.

10.1 WCG Waste Processing Preparation (continued)

Waste Handling Technician

[11] **IF** processing a parent drum containing an unvented, sealed 5- to 30-gal waste package, **THEN:**

WARNING

Unvented, sealed waste packages may contain a concentration of hydrogen gas and are to be handled or identified in this document using grounding devices and lid restraints in order to minimize any possible adverse effects from potentially releasing hydrogen.

NOTE *Drum lid restraints that are not in use are to be stored in such a matter that the drum lid restraints are protected from degradation (e.g., in a daughter drum).*

[A] **($) VISUALLY** inspect the waste package lid restraint for the following, and **DOCUMENT** the results of the inspection on Attachment 3:

- Degradation (e.g., no indication of cracked parts, missing fasteners, loose or frayed parts, excessive wear, or unusual deformation) (SAC 5.10.1.5.1)
- Missing or illegible identification
- Melting or charring
- Broken or worn stitching in load bearing splices
- Knots in any part of the drum lid restraint
- Discoloration and brittle or stiff areas

[B] **($) ATTACH** the waste package lid restraint to the waste package and verify proper installation, and **DOCUMENT** that the lid restraint has been attached on Attachment 3. (SAC 5.10.1.5.1)

NOTE 1 *A proper ground requires that all ends of the grounding strap be firmly attached to a clean-bare metal surface.*

NOTE 2 *Separate copies of Attachment 3 are required for each waste package.*

[C] **($) IF** the waste package is a METAL 5- to 30-gal waste package, **THEN GROUND** the metal waste package using a grounding strap in the WCG, and **CHECK** (√) SAT or UNSAT on Attachment 4 to document that the grounding strap was attached.. (LCO 3.6 and SR 4.6.1)

Independent Verifier

[D] **VERIFY** that the grounding strap is attached and **CHECK** (√) SAT or UNSAT on Attachment 4.

10.1 WCG Waste Processing Preparation (continued)

[E] **RECORD** the following information, Name, Signature, Z Number and Date on Attachment 4.

Waste Handling Technician

[F] **($) IF** the grounding strap was attached to a waste package or parent drum, **AND** the grounding strap becomes detached from either the waste package or the parent drum during the opening of the waste package,
THEN ENTER the Actions of LCO 3.6, and **NOTIFY** the WCRRF Operations Center. (LCO 3.6)

[G] **OPEN** the waste package, and **REMOVE** the lid restraint and waste package lid.

[H] **ENSURE** that the lid restraint and waste package lid are placed out of the way of the open end of the waste package.

[I] **($) RECORD** the time that the lid restraint and waste package lid were removed from the waste package on Attachment 3. (SAC 5.10.1.5.2 and SAC 5.10.1.6.3)

[J] **ENSURE** that all WCG operations have been suspended.

[K] **($) WHEN** 30 min. has elapsed,
THEN DOCUMENT the time and that greater than or equal to 30 min. has elapsed since the lid restraint and waste package lid were removed on Attachment 3. (SAC 5.10.1.5.2 and SAC 5.10.1.6.3)

[L] **RESUME** operations as directed by supervision.

[M] **REMOVE** the grounding straps from the <u>metal</u> waste package, as applicable.

[N] **IF** the waste packaged opened contains a 5- to 30-gal unvented, sealed waste package,
THEN GO to Step 10.1.[11][A].

[O] **IF** the waste package opened contains an unvented, sealed waste package of less than 5 gal,
THEN GO to Step 10.1[12].

[P] **REMOVE** the grounding straps from the parent drum.

10.1 WCG Waste Processing Preparation (continued)

[Q] **IF** directed by supervision,
THEN REMOVE the administrative lock from the WCG electrical receptacles, and **ENERGIZE** the WCG electrical receptacles.

[12] **IF** processing a parent drum containing an unvented, sealed waste packages of less than 5 gal,
THEN:

[A] **OPEN** the waste packages, and **REMOVE** the waste package lids.

NOTE *For situations where multiple waste packages are being opened (e.g., sample vials) the 30-min. wait period before the electrical receptacles may be re-energized starts after the last waste package is opened.*

[B] **($) RECORD** the time that the last unvented, sealed waste package lid was removed from the waste package on Attachment 3. (SAC 5.10.1.6.3)

WARNING

The WCG electrical receptacles is not to be re-energized until 30 min. has elapsed since the unvented waste package was opened in order to prevent the possibility of a flammable gas mixture deflagration.

NOTE *Glovebox operations may continue after opening a less than 5 gal-unvented sealed waste package while waiting the required 30 min. before re-energizing the WCG electrical receptacles.*

[C] **WHEN** 30 min. has elapsed,
THEN:

[a] **($) DOCUMENT** the time and that that greater than or equal to 30 min. has elapsed since the waste package lid was removed on Attachment 3. (SAC 5.10.1.6.3)

10.1 WCG Waste Processing Preparation (continued)

[b] **REMOVE** the grounding straps from the parent drum.

[c] **REMOVE** the administrative lock from the WCG electrical receptacles, and energize the WCG electrical receptacles as directed by supervision.

[13] **IF** sparking is observed at anytime during the processing of waste material, **THEN:**

[A] **PLACE** a fire barrier (e.g., MET-L-X or fire blanket) over the suspect waste material.

[B] **STOP** waste processing.

[C] **ENSURE** that a Fire Watch has been stationed at the WCG to continuously monitor the waste in the WCG, and **CHECK** (√) YES or NO on Attachment 1.

NOTE *The following personnel are notified by the WCRRF Operations Center:*

- *OM or designee*
- *Solid Waste Regulatory Compliance Group*
- *Industrial Hygienist*
- *Cognizant System Engineer*
- *Radiation Protection*

[D] **NOTIFY** the WCRRF Operations Center/Shift Operations Manager of the discrepancy, and **DOCUMENT** the notification and discrepancy in the Comments section of Attachment 1:

[E] **IF** the suspect item is to be bagged out of the WCG, **THEN BAG OUT** the suspect item in accordance with Section 9.1, WCG Item Bag-Out.

[F] **PLACE** the suspect item in an empty daughter drum.

[G] **IF** the daughter drum is attached to the WCG, **THEN BAG OFF** the daughter drum in accordance with Section 8.2, Bag Off Daughter Drum.

[H] **CLOSE** the daughter drum in accordance with EP-WCRR-WO-DOP-0221.

10.1 WCG Waste Processing Preparation (continued)

[14] **IF** a shielded container (e.g., lead lined) is in the parent drum,
THEN:

WARNING

Personnel are to avoid the high radiation exposure area in front of a shielded container that has been accessed in order to prevent increased exposure to radiation due to radiation streaming from the open portion of the shielded container.

[A] **ENSURE** that personnel in Building TA-50-69 are notified that a shielded container is to be accessed and that they are positioned such that when the shielded container is accessed the radiation streaming from the shielded container is directed away from personnel.

[B] **ACCESS** the shielded container contents without removing the contents, and **REQUEST** an RCT to perform a radiological survey to determine the radiation levels.

[C] **IF** the radiation level exceeds an RWP limit,
THEN:

[a] **ENSURE** that the shielding has been replaced, and **CLOSE** the shielded container.

[b] **REQUEST** an RCT perform a radiological survey on the closed shielded container to determine the radiation levels.

[c] **IF** the closed, shielded container radiation level exceeds the RWP limits,
THEN:

1. **ENSURE** that all waste material is in a safe configuration.

2. **STOP** the work activity.

3. **COMPLY** with the RCT's instructions to minimize radiological exposure.

4. **NOTIFY** the WCRRF Operations Center of the condition, and **REQUEST** the applicable actions.

10.1 WCG Waste Processing Preparation (continued)

NOTE *Waste placed into daughter drums must be from a single parent drum except for the collection drum (pressurized container or aerosol can).*

[d] **IF** the waste material is **NOT** to be processed at this time as directed by supervision,
THEN:

1. **PLACE** the waste items from the parent drum into a daughter drum.

2. **BAG OFF** the parent and daughter drums in accordance with the applicable section of this procedure.

3. **IF** a Fire Watch was stationed,
THEN ENSURE that all INVENTORY is in a safe configuration, and **SECURE** the Fire Watch, and **CHECK** (√) YES or NO on Attachment 1.

4. **NOTIFY** the WCRRF Operations Center of the waste disposition.

10.1 WCG Waste Processing Preparation (continued)

NOTE 1 *Continued operation may require the work activity to be paused in order to allow operators and supervision to evaluate the condition to determine the necessary response to the situation (e.g., re-enter area under a different RWP or prepare a POC to accept the waste material).*

NOTE 2 ***($)*** *A STATIONARY FIRE WATCH is required in the OPERATION and WARM STANDBY MODE when the WCG INVENTORY is greater than 300 PE-Ci equivalent combustible waste. (AC 5.2.3)*

[D] **WHEN** the appropriate actions have been determined,
THEN GO to Step 10.1[15].

[15] **IF** any of the following items are identified during the processing of waste:

- Lead-elemental (e.g., circuit boards)
- Mercury-elemental (e.g., thermometers or switches)
- Batteries (e.g., lead/acid, nickel cadmium, or lithium)
- Light bulbs (i.e., incandescent or fluorescent)
- PCB items (e.g., ballasts, capacitors, or transformers)
- Liquids (any amount not remediated or absorbed)

THEN:

[A] **RECORD** the item descriptive information (item type, size, trade name, if available) in the Comments section of Attachment 1.

NOTE *The Waste Management Coordinator (WMC) may be notified at a time that operationally convenient.*

[B] **NOTIFY** the Waste Management Coordinator (WMC) of items found and whether the items were removed, placed into a separate collection container, or placed into a daughter drum.

NOTE 1 *The WMC can assist with assigning the appropriate RCRA Hazardous Waste Codes to the daughter drum.*

NOTE 2 *The following step may be performed when operationally convenient but must be completed the same day as the identification of the item.*

[C] **ENSURE** that the appropriate RCRA Hazardous Waste Codes is assigned to the drum that receives the item (e.g., daughter drum or collection drum).

10.1 WCG Waste Processing Preparation (continued)

WARNING

Glass sample vials may contain residual granular plutonium hydride which can generate sparks when subjected to mechanical agitation. To reduce the possibility of breaking a glass sample vial and the generation of sparks glass sample vials SHALL be without excessive force. (EP-DIV-REPORT-09)

NOTE *Multiple sections may be performed and repeated in order to completely disposition all of the waste from a parent drum.*

[16] **PERFORM** the following applicable sub-section:
- Section 10.2, Waste Material Greater Than 190 mrem/hr
- Section 10.3, Prohibited Item Disposition
- Section 10.4, Waste Splitting Activities
- Section 10.5, Repackaging Activities
- Section 10.6, Processing Nitrate Salt Drums

10.2 Waste Material Greater Than 190 mrem/hr

The following sub-section provides instructions for the disposition of waste material with an expected radiation dose rate of greater than 190 mrem/hr on contact with the outside of a waste container. Simulating that the waste material is inside of a daughter waste container (e.g., measured through drum lid) is the desired method of determining the expected radiation dose rate of waste material outside of a waste container.

NOTE 1 *Appendix 5, Flowchart for Processing of High Dose Items of Mixed Material Types, illustrates the process for POC operations.*

NOTE 2 *Waste containers with Nitrate Salt and a radiation dose rate of greater than 190 mrem/hr are to be processed in accordance with Section 10.6, Processing Nitrate Salt Drums, before performing this section. An attempt to reduce the radiation dose rate to less than or equal to 190 mrem/hr by absorbing the Nitrate Salt with absorbent should be attempted first. Nitrate Salt absorption reduces the quantity of POCs required to process the waste material.*

Waste Handling Technician

[1] **ENSURE** that a POC assembly has been prepared and is available.

10.2 Waste Material Greater Than 190 mrem/hr (continued)

[2] **DETERMINE** whether the serial numbers on the pipe component lid and the pipe component are the same.

[3] **IF** the serial numbers do **NOT** match,
THEN:

[A] **IDENTIFY** (e.g., tag or mark) the POC indicating that the POC is defective.

[B] **SEGREGATE** the POC in order to prevent the item from being used.

NOTE *The NCR may be initiated at a time that is operationally convenient.*

[C] **ENSURE** that an NCR is initiated in accordance with P330-6, Nonconformance Reporting, as required.

[D] **NOTIFY** the WCRRF Operations Center of the discrepancy.

[E] **GO** to Step 10.2[1].

[4] **IF** the POC is to be bagged onto the WCG,
THEN RECORD the following POC bag-on bag information on Attachment 1:
- Manufacturer
- Model Number
- Serial Number
- Date of Manufacture

[5] **PLACE** the POC assembly and shielding near the vicinity of the WCG to provide shielding during bag-off operations <u>or</u> bag-on the POC to the WCG in accordance with Section 8.1, Bag On Daughter Drum, Bagport, or Gloveport; and **RECORD** the POC drum number and POC unique identification number on Attachment 1.

[6] **IDENTIFY** items to be placed into a POC assembly, and **ENSURE** that an item description is recorded on Attachment 1.

10.2 Waste Material Greater Than 190 mrem/hr (continued)

[7] **IF** the item is to be bagged off of the WCG and the item is from a waste container with a mixed material type,
THEN:

[A] **REMOVE** any lead shielding from outside of the item, and **PLACE** the lead in a daughter drum.

[B] **ENSURE** that a description of the item is recorded on Attachment 1.

[C] **BAG OFF** the item in accordance with Section 9.1, WCG Item Bag Out.

[D] **IF** there is no lead shielding inside of the item (container),
THEN PLACE the bagged out item inside a shielded (pewter) container or cover with a lead blanket.

[E] **GO** to Step 10.2[9].

NOTE *Shielded container is only used for the purpose of ALARA and not for final waste packaging.*

[8] **IF** an individual item is to be bagged out of the WCG,
THEN:

[A] **BAG OUT** individual items in accordance with Section 9.1, WCG Item Bag Out.

[B] **PLACE** the bagged out items in shielded (pewter) container or cover with a lead blanket, as required.

NOTE 1 *A POC assembly drum is full when it has reached its weight limit of 547 lb, or is physically full.*

NOTE 2 *Waste placed into daughter drums or Pipe Overpack Containers (POCs) must be from a single parent drum.*

[9] **WHEN** the item is to be placed into a POC,
THEN ENSURE that the item has been removed from the shielded (pewter) container or lead blanket, as necessary.

[10] **PLACE** the items into the POC.

10.2 Waste Material Greater Than 190 mrem/hr (continued)

[11] **IF** the POC assembly is **NOT** full,
AND the parent drum is still being processed,
AND the POC assembly is **NOT** bagged onto the WCG,
THEN:

[A] **ALIGN** the lid holes with the holes in the pipe component body.

[B] **HAND-THREAD** the lid bolts as far as possible.

[C] **REPLACE** the fiberboard packaging, being careful to match the pipe bolt heads, hoist ring, and filter with cutouts in fiberboard.

[D] **REPLACE** the spacers, liner lid, and drum lid.

[E] **IF** there are additional 190 mrem/hr items to be bagged out of the WCG, **THEN GO** to Step 10.2[7].

[12] **IF** the POC is bagged onto the WCG,
THEN bag-off the POC in accordance with Section 8.2, Bag Off Daughter Drum

[13] **CLOSE** the POC assembly in accordance with the manufacturer's instructions and **DOCUMENT** (initials and Z number) that the POC assembly has been closed in accordance with the manufacturer's instructions on Attachment 1.

[14] **WEIGH** the POC assembly, and **RECORD** the POC Assembly Gross Weight on Attachment 1.

[15] **REQUEST** an RCT perform a radiation survey of the POC, and **RECORD** the POC radiation survey results on Attachment 1.

[16] **IF** the following requirements are **NOT** satisfied:
- External surface radiation dose rates less than 200 mrem/hr (DOE/WIPP-02-3122)
- Gross weight less than 547 lb for a 12 in. POC (CH-TRAMPAC)

THEN NOTIFY the WCRRF Operations Center of the discrepancy, and **REQUEST** the applicable actions.

[17] **LABEL** the POC assembly drum in accordance with EP-DIV-DOP-20043.

10.2 Waste Material Greater Than 190 mrem/hr (continued)

[18] **IF** all of the waste in the parent drum has **NOT** been dispositioned,
THEN GO to the appropriate sub-section to complete processing the remaining waste.

[19] **GO** to Section 11.1, Disposition.

10.3 Prohibited Item Disposition

The following sub-section provides instructions for the disposition of waste material that is considered to be prohibited items at WIPP.

NOTE 1 *The following activities associated with sorting parent drum waste such as the disposition of liquids, pressurized containers, and PCB-contaminated waste may be performed simultaneously or in any order.*

NOTE 2 *The Hold Tag for CCP NCRs is removed from the parent drum and returned to CCP personnel.*

NOTE 3 *A completed PID package includes the following documents:*
- *Attachment 1, WCRRF WCG Waste Processing Data Sheet*
- *Attachment 5, WCRRF Prohibited Item Collection Drum Data Sheet*
- *EP-WCRR-WO-DOP-0221 Attachment 1, Checklist for the Preparation of a New 55-Gallon Drum Assembly*
- *EP-WCRR-WO-DOP-0221 Attachment 2, Checklist for the Closing of a 55-Gallon Drum Assembly*
- *WDP Waste Remediation Safety Evaluation Data Sheet (EP-DIV-AP-20098 Attachment 1)*

Waste Handling Technician

[1] **LOCATE** any contained, uncontained, or free liquids.

NOTE 1 *Waste containers with liquids (any amount or configuration) that have <u>not</u> been solidified (absorbed) must be managed on secondary containment pallets and have a FREE LIQUID label affixed.*

NOTE 2 *By absorbing all liquids the resulting daughter drum is <u>not</u> required to be stored on a secondary containment pallet.*

[2] **IF** liquid is identified inside of transparent or opaque containers that is <u>less than or equal to</u> 60 ml in the containers,
AND the liquid is **NOT** to be absorbed,
THEN PLACE the containers with liquids into the daughter drum.

10.3 Prohibited Item Disposition (continued)

[3] **IF** liquid is identified inside of a transparent or opaque containers (e.g., contents adequately labeled),
THEN:

[A] **RECORD** the approximate liquid volume on Attachment 1.

[B] **OPEN** the containers.

[C] **PERFORM** a pH test of the liquid using Litmus Paper.
- Acid (less than 7)
- Caustic (base – greater than 7)

[E] **NEUTRALIZE** the liquid, as necessary.

[F] **OBTAIN** the appropriate absorbing agent, and **PLACE** the absorbent into a compatible container (e.g., bottle or bag) that has a volume of less than 4 Liters.

NOTE *Multiple containers of less than 4 liters may be required in order to absorb all of the free liquid.*

[G] **TRANSFER** the liquid into the compatible container (e.g., bottle or bag), and **PLACE** the container (e.g., bottle or bag) inside of the daughter drum.

NOTE *Waste containers with liquids (any amount or configuration) that have <u>not</u> been solidified (absorbed) must be managed on secondary containment pallets and have a FREE LIQUID label affixed.*

[4] **IF** liquid is identified in transparent containers or in opaque containers that **CANNOT** be safely opened (e.g., contents adequately labeled),
THEN:

[A] **PLACE** the containers into the daughter drum.

10.3 Prohibited Item Disposition (continued)

[B] **NOTIFY** the WCRRF Operations Center of the discrepancy, and **DOCUMENT** in the Comments section of Attachment 1.

NOTE *Liquids are not to be combined or bulked.*

[5] **IF** any free liquid is identified,
THEN:

[A] **DETERMINE** the approximate volume of liquid, and **DOCUMENT** the approximate amount of liquid on Attachment 1.

[B] **PERFORM** a pH test on the liquid using Litmus Paper.

[C] **NEUTRALIZE** the liquid, as necessary.

[D] **OBTAIN** the appropriate absorbing agent, and **PLACE** the absorbent in a compatible container (e.g., bottle or bag) that has a volume of less than 4 Liters.

[E] **ADD** a small amount of the free liquid to the container (e.g., bottle or bag).

[F] **IF** any reaction occurs between the absorbent and the free liquid,
THEN:

[a] **STOP** the addition work activities.

[b] **NOTIFY** the WCRRF Operations Center of the condition, and **REQUEST** the applicable actions.

[c] **DOCUMENT** the notifications and actions in the Comments section of Attachment 1.

10.3 Prohibited Item Disposition (continued)

NOTE *Multiple containers (e.g., bottle or bag) of less than 4 liters may be required in order to absorb all of the free liquid.*

[G] **IF** processing Nitrate Salts with free liquids,
THEN GO to Sub-section 10.6, Processing Nitrate Salt Drums.

[H] **MIX** the absorbent with the waste.

[I] **ENSURE** absorbent is thoroughly mixed with the liquid.

NOTE *Absorbing waste containers that are categorized as Nitrate Salts will generate additional daughter drums due to the amount of absorbent required to solidify the waste.*

[J] **PLACE** the containers (e.g., bottle or bag) inside of the daughter drum.

[K] **REPEAT** Step 10.3[5] until all liquids have been absorbed.

NOTE *Appendix3, Volumes of Cylindrical Inner Containers Near 4 Liters, can be used to help determine whether a container is greater than 4 liters.*

[6] **LOCATE** sealed, unpressurized containers greater than 4 liters (that do not contain any liquid), and **DISPOSITION** the container as follows:

[A] **REMOVE** the tape, lid, cap, stopper, or other appropriate method.

[B] **PLACE** the dispositioned items into the daughter drum.

[7] **LOCATE** opaque or non-penetrable item (that do not contain any liquid), and **DISPOSITION** the container as follows:

10.3 Prohibited Item Disposition (continued)

[A] **DESCRIBE** in detail (e.g., size, shape, labeling, weight, material) the opaque or non-penetrable items on Attachment 1.

[B] **PLACE** the dispositioned items into the daughter drum.

[8] **LOCATE** potentially pressurized containers, and **DISPOSITION** the container as follows:

[A] **IF** there is evidence that a potentially pressurized container has been previously punctured and is empty,
THEN:

[a] **PLACE** a metal rod or equivalent (item found in the waste) inside the container and **SECURE** with tape, or **ENLARGE** the hole to be visible by Radiography.

[b] **PLACE** the container inside the daughter drum.

[B] **IF** a potentially pressurized container is **NOT** punctured,
THEN:

[a] **DECONTAMINATE** (wipe down) the potentially pressurized container.

[b] **BAG OUT** the potentially pressurized container in accordance with Section 9.1, WCG Item Bag Out.

NOTE *Item Identification labels are generated as part of performing the WCATS desktop remediation application.*

[c] **PLACE** an Item Identification (ID) label on the potentially pressurized container or bagout bag.

NOTE 1 *A collection drum for pressurized containers and aerosol cans will be established and placed inside one of the WCRRF Transportainers (TSDF).*

NOTE 2 *Pressurized cylinders and aerosol cans must be collected in separate drums (e.g., on collection drum for pressurized cylinders and one collection drum for aerosol cans. All other prohibited items that cannot be remediated must be collected in a separate (third) collection drum.*

[d] **PLACE** the potential pressurized container in a designated collection drum.

10.3 Prohibited Item Disposition (continued)

[e] **ENSURE** that the following information is recorded on Attachment 5 for each item:

- Collection drum number
- Collection drum type (pressurized container, aerosol, or other)
- Date collection drum waste created
- Date item is added to the collection drum
- Item Identification Label Number
- Parent Container Number
- Parent Accumulation Start Date
- Parent EPA Codes
- Item Description
- Item Shape
- Item Size
- Item Labeling
- Item Weight (lb)
- Initials and Z number

NOTE *The hazardous waste label may need to be replaced in order to ensure that all information is added and legible.*

[f] **ENSURE** that the accumulation start date on the collection drum reflects the earliest parent drum accumulation start date recorded on Attachment 5.

[g] **ENSURE** that all EPA Codes from the associated parent drums are documented on the collection drum hazardous waste label.

[9] **IF** any polychlorinated biphenyls (PCB)-contaminated waste is identified, **THEN:**

[A] **DESCRIBE** in detail (e.g., size, shape, labeling, weight, material) the PCB-contaminated waste on Attachment 1.

NOTE *The following step may be performed when operationally convenient.*

[B] **ATTACH** a PCB Item ID Number to the drum receiving the PCB waste (above the top rolling hoop and cover with clear tape), and **RECORD** the PCB Item ID Number on Attachment 1.

10.3 Prohibited Item Disposition (continued)

[C] **PLACE** the PCB-contaminated waste into a daughter drum.

[10] **DOCUMENT** a description of the type of remaining waste added to each daughter drum during the processing of waste from a parent drum on Attachment 1.

[11] **REPEAT** Steps 10.3[2] though 10.3[10] as necessary to completely resolve any PIDs within the parent drum.

[12] **IF** all of the waste in the parent drum has **NOT** been dispositioned,
THEN GO to the appropriate sub-section to complete processing the remaining waste.

NOTE *The following step may be performed out of sequence.*

[13] **DETERMINE** the level of waste placed into the daughter drum, and **RECORD** the Daughter Drum % Full value (%) on Attachment 1.

[14] **BAG OFF** waste containers in accordance with Section 7.2, Parent Drum Bag Off; and Section 8.2, Bag Off Daughter Drum.

[15] **GO** to Section 11.1, Disposition.

10.4 <u>Waste Splitting Activities</u>

The following steps provide instructions for the disposition of waste material with a PE-Ci value that requires the waste material to be divided into multiple daughter drums.

This sub-section is performed following the assaying of the parent drum and the determination of the number of daughter drums to be generated from the parent drum.

Waste Handling Technician

[1] **CAREFULLY REMOVE** a portion of the parent drum's contents (waste items).

[2] **NOTIFY** the Assay Personnel of the estimated weight of the items, as requested.

[3] **PLACE** the waste items into the WCG metal bucket.

[4] **LOWER** the metal bucket into the <u>east</u> daughter drum (closet to airlock).

10.4 Waste Splitting Activities (continued)

Assay Personnel

[5] **PERFORM** a radiological assay of the material in the east daughter drum in accordance with an approved procedure.

Waste Handling Technician

[6] **IF** the assay is higher than desired,
THEN:

[A] **LIFT** the metal bucket out of the east daughter drum.

[B] **REMOVE** some of the metal bucket contents.

[C] **GO** to Step 10.4[4].

[7] **LIFT** the metal bucket out of the east daughter drum.

NOTE *Waste placed into daughter drums or Pipe Overpack Containers (POCs) must be from a single parent drum.*

[8] **PLACE** the waste material into the west daughter drum (farthest from airlock)

[9] **REPEAT** Steps 10.4[1] through 10.4[8] until the desired radiological assay value is reached in the west daughter drum (farthest from airlock).

NOTE *The following step may be performed out of sequence.*

[10] **DETERMINE** the level of waste placed into the daughter drums, and **RECORD** the Daughter Drum % Full value (%) on Attachment 1.

[11] **BAG OFF** the west daughter drum (farthest from airlock) in accordance with Section 8.2, Bag Off Daughter Drum.

NOTE *Steps 10.4[12] and 10.4[13] may be performed in any order or concurrently.*

[12] **BAG ON** a new-west daughter drum (farthest from airlock) in accordance with Section 8.1, Bag On Daughter Drum, Bagport, or Gloveport.

10.4 Waste Splitting Activities (continued)

[13] **REPEAT** Steps 10.4[1] through 10.4[12] until all material within the parent drum has been processed.

[14] **WHEN** assaying of waste at the WCG is complete,
THEN ENSURE that the assaying equipment is removed from the WCG Exclusion Zone.

[15] **IF** all of the waste in the parent drum has **NOT** been dispositioned,
THEN GO to the appropriate sub-section to complete processing the remaining waste.

[16] **GO** to Section 11.1, Disposition.

10.5 Repackaging Activities

Waste Operator

[1] **REMOVE** waste items from the parent drum.

NOTE *Waste placed into daughter drums or Pipe Overpack Containers (POCs) must be from a single parent drum.*

[2] **PLACE** the waste items into a daughter drum.

[3] **DOCUMENT** any waste added during the processing of waste from a parent drum on Attachment 1.

NOTE *The following step may be performed out of sequence.*

[4] **DETERMINE** the level of waste placed into the daughter drums, and **RECORD** the Daughter Drum % Full value (%) on Attachment 1.

[5] **BAG OFF** the parent and daughter drums from the WCG in accordance with Section 7.2, Parent Drum Bag Off; and Section 8.2, Bag Off Daughter Drum.

[6] **IF** all the waste in the parent drum has **NOT** been dispositioned,
THEN GO to the appropriate sub-section in this procedure to complete processing of the remaining waste.

[7] **GO** to Section 11.1, Disposition.

10.6 Processing Nitrate Salt Drums

The following sub-section provides instructions for the disposition of Nitrate Salt drums that require the waste material to be mixed with absorbent material. Unless otherwise directed by supervision the minimum ratio of absorbent to Nitrate Salt is 3-parts absorbent to 1-part Nitrate Salt.

[1] **REMOVE** the waste items from the parent drum.

[2] **DOCUMENT** any waste items from the parent drum added to the daughter drum during the waste processing on Attachment 1.

[3] **ENSURE** that an organic absorbent (Kitty Litter/Zeolite® absorbent) is added to the waste material at a minimum ratio of 3-parts absorbent to 1-part waste or at a ratio as directed by supervision.

[4] **ENSURE** absorbent (Kitty Litter/Zeolite® absorbent) is thoroughly mixed with the Nitrate Salt material.

[5] **IF** the measured radiation level of the absorbent/Nitrate Salt mixture is greater than 190 mrem/hr,
AND multiple attempts to reduce the radiation level by splitting the absorbent/Nitrate Salt mixture have been attempted or directed by supervision,
THEN GO to Section 10.2, Waste Material Greater Than 190 mrem/hr.

[6] **IF** the measured radiation level of the absorbent/Nitrate Salt mixture is greater than 190 mrem/hr,
THEN:

[A] **SPLIT** the absorbent/Nitrate Salt mixture.

[B] **REPEAT** Steps 10.6[3] through 10.6[5] for each portion of the absorbent/Nitrate Salt mixture.

[7] **PLACE** process waste into daughter drum.

[8] **REPEAT** Steps 10.6[1] through 10.6[7] for all Nitrate Salt processing.

[9] **REMEDIATE** the contents of the parent drum for other items as applicable.

10.6 Processing Nitrate Salt Drums (continued)

NOTE *Absorbent waste containers that are categorized, as Nitrate Salts will generate additional daughter drums due to the amount of absorbent required to solidify the waste.*

[10] **DETERMINE** the level of waste placed into the daughter drums, and **RECORD** the Daughter Drum % Full value (%) on Attachment 1.

[11] **BAG OFF** the parent and daughter drums from the WCG in accordance with Section 7.2, Parent Drum Bag Off; and Section 8.2, Bag Off Daughter Drum.

[12] **CLOSE** the daughter drum in accordance with EP-WCRR-WO-DOP-0221, Preparing and Closing 55-Gallon Daughter Drum Assemblies.

11. POST-PERFORMANCE ACTIVITY

11.1 Disposition

Waste Handling Technician

[1] **SIGN** and **DATE** the applicable attachments.

Cognizant System Engineer

[2] **IF** UNSAT was checked on Attachment 4,
THEN:

[A] **PERFORM** an Immediate Operability Determination (IOD) in conjunction with the SOM in accordance with AP-341-516, Operability Determination and Functionality Assessment.

[B] **IF** the IOD is that the Structure, System, and Component (SSC) is operable, **AND** information is available that could change the outcome of the IOD, **THEN PERFORM** an Prompt Operability Determination for the deficiency in accordance with AP-341-516.

[C] **NOTIFY** the applicable Operations Center and SOM of the operability determination, as applicable.

[D] **PRINT, SIGN, Z number** and **DATE** Attachment 4.

SOS or designee

[3] **IF** a Fire Watch was stationed,
THEN ENSURE all INVENTORY is in a safe configuration, and **SECURE** the Fire Watch, and **CHECK** (√) YES or NO on Attachment 1.

[4] **IF** Section 10 was performed,
THEN ENSURE that the WCATS desktop application WCRR-REMED has been completed and the all-in-one labels generated and applied in accordance with EP-DIV-DOP-20043.

[5] **REVIEW** the applicable attachments for accuracy and completeness.

[6] **IF** any discrepancies are identified,
THEN RESOLVE the discrepancies with the original surveillant to correct the documentation.

11.1 Disposition (continued)

[7] **IF** Attachment 4 was completed,
THEN:

[A] **CHECK** (√) YES or NO to indicate whether the applicable acceptance criteria is satisfied on Attachment 4.

[B] **IF** the applicable acceptance criteria is **NOT** satisfied,
THEN:

[a] **ENSURE** that the applicable TSR actions have been implemented.

[b] **ENSURE** that the actions of EP-DIV-AP-13, EWMO TSR-Related Operational Limits Actions Compliance Tracking, have been implemented.

[c] **ENSURE** that the WCRRF Operations Center, SOM and EWMO Facility Operations Director (FOD) have been notified of the discrepancy.

[8] **PRINT, SIGN,** and **RECORD** Z#, Date/Time on the applicable attachments.

[9] **FORWARD** the applicable attachments to the WCRRF Operations Center.

[10] **ENSURE** that the Administrative Control Lock Log Sheet form, lock and key are returned to WCRRF Operation Center.

[11] **IF** a prohibited item collection drum was brought into TA-50-69,
AND waste processing is complete,
THEN ENSURE that the prohibited item collection drum is moved out of TA-50-69.

NOTE *Completing a Post-Job Review may be accomplished using the applicable P300 form or online (the preferred method since the institution has access to feedback and lessons learned http://int.lanl.gov/safety/iwmc/ [Click on the Submit IWD Part 4, Post-Job Review]).*

[12] **IF** any of the following occur:
- A new activity was completed for the first time
- A request was made by anyone involved with the performance of this procedure to perform a post-job review
- An abnormal event occurred
- A revision to an existing procedure was issued and it has been determined by the procedure owner or designee that a Post-Job Review is required

THEN PERFORM a Post-Job Review in accordance with P300.

11.1 Disposition (continued)

[13] **IF** the Post-Job Review identified any necessary changes to this procedure, **THEN INITIATE** a revision to this procedure.

11.2 Records Processing

Waste Handling Technician or Supervision

[1] Disposition records in accordance with the following:

Record Identification	Record Type Determination	Protection/Storage Method	Processing Instructions
Appendix 1. WCRRF P101-25, Attachment B Drum Lift Pre-Engineered Critical Lift Plan, Attachment 1, WCRRF WCG Waste Processing Data Sheet Attachment 2, WCRRF WCG Drum Lift Inspection Data Sheet Attachment 3, WCRRF WCG Breaching (Opening) Unvented, Sealed Waste Packages Checklist Attachment 4, WCRRF WCG Breaching (Opening) Metal 5- to 30 gal Unvented, Sealed Waste Package Surveillance Attachment 5, WCRRF Prohibited Item Collection Drum Data Sheet	Quality Assurance (QA) Record	Supervision **SHALL** implement a reasonable level of protection to prevent loss and degradation. Records should be maintained in a one-hour fire rated metal file cabinet when not in use. The instructions in this section may vary depending on the record such as some records may be retained in an Operations Center for a period of time (e.g., 1 year) in order to provide trending data or evidence of compliance.	When the records are ready for final disposition, the record is transferred to Records Management in accordance with EP-DIR-AP-10003, Records Management Procedure For ADEP Employees.

12. REFERENCES

ABD-WFM-006, Technical Safety Requirements (TSRs) for Waste Characterization, Reduction, and Repackaging Facility (WCRRF)

AP-341-516, Operability Determination and Functionality Assessment

CCP-TP-113, CCP Standard Waste Visual Examination

CH-TRAMPAC, Contact Handled – Transuranic Waste Authorized Methods for Payload Control

DOE/WIPP-02-3122, Transuranic Waste Acceptance Criteria For Waste Isolation Pilot Plant

EP-DIV-AP-0112, EWMO Pre-Job Briefings

EP-DIV-AP-13, EWMO TSR-Related Operational Limits Actions Compliance Tracking

EP-DIV-AP-20047, LTP Glovebox/Glovebag and Glove Safety Program

EP-DIV-AP-20098, LTP TRU Waste Remediation Safety Evaluation

EP-DIV-AP-0117, WDP Division Forms

EP-DIV-AP-0120, EWMO Watchbill Administration

EP-DIV-DOP-20043, LTP TRU Waste Container Labeling

EP-DIV-POLICY-20057, EWMO Health and Safety Policy-Manual Movement

EP-DIV-REPORT-09, Engineering Path Forward Report for CMR Wing 2 Containers

EP-DIR-AP-10003, Records Management Procedure For ADEP Employees

EP-WCRR-FO-DOP-0201, WCRRF and Building TA-50-69 TSR Mode Change

EP-WCRR-RM-AOP-0208, Special Shapes

12. REFERENCES (continued)

EP-WCRR-WO-DOP-0221, Preparing and Closing 55-gal Daughter Drum Assemblies

EP-WCRR-WO-DOP-0236, WCRRF Loading/Unloading SWB or 85-gal Drum

EP-WCRR-WO-DOP-0239, Verifying WCRRF Scales

EWMO-DO-07-042, Memo. Dtd. Jul 6 ,2007, WCRRF Pu-238 Glovebag Issue

Form 1489, Pre-Operational Inspection Record for Overhead Cranes and Hoists

P101-18, Procedure for Pause/Stop Work

P101-25, Cranes, Hoists, Lifting Devices, and Rigging Equipment

P330-6, Nonconformance Reporting

APPENDIX 1

Page 1 of 10

WCRRF DRUM LIFT CRITICAL LIFT PLAN (P101-25 Attachment B)

Table B-1. LANL Critical Lift Plan for Pre-Engineering Production Lift	
Name and company of person preparing this plan: LANS	
Date prepared: 1-31-2014	Date of lift:
Critical lift plan expiration date: N/A	PIC:
Client/customer: DOE/WIPP	Job #: N/A Project #: N/A
Lift location (building #, address, etc.): WCRRF, TA-50-69	This critical lift plan must be available when and where the lift is performed. How will this requirement be met? Kept on file in the WCRRF Operations Center.

A. Critical Lift Determination	
A lift will be determined critical if any of the following conditions are met. Check each answer with either a Yes or a No.	
1. If the load item were damaged or upset would it result in a release into the environment of radioactive or hazardous material exceeding the established permissible environmental limits?	Yes _____ No ✓
2. Is the load item unique and, if damaged, would it be irreplaceable or not repairable and is it vital to a system, facility or project operation?	Yes _____ No ✓
3. If the load item was damaged, would the cost to replace or repair the load item, or the delay in operations of having the load item damaged have a negative impact on facility, organizational, or DOE budgets to the extent that it would affect program commitments?	Yes _____ No ✓
4. If the load were mishandled or dropped, would the event cause any of the above noted consequences to nearby installations or facilities?	Yes _____ No ✓
5. Does the lift exceed 75% of the manufacturer's rated capacity for the crane, hoist, or mechanized equipment to be used in the lift?	Yes ✓ No _____
6. Does the load item require special care in handling because of weight, size, asymmetrical shape, undetermined center of gravity, installation tolerances, or other unusual factors?	Yes _____ No ✓
7. Is the lift an otherwise non-critical lift that must be made in close proximity to critical or expensive items that could be damaged as a result of contact with a hoisted load?	Yes _____ No ✓
8. Does the lift use two or more cranes, hoists, pieces of mechanized equipment, or a combination of such equipment?	Yes _____ No ✓
9. Is the lift such that the crane, hoist, or mechanized equipment could at any time come in contact with an energized high voltage power line?	Yes _____ No ✓
10. Could failure of this lift significantly impact the confidence of LANL customers or sponsors in the ability of LANL to safely execute current or future missions?	Yes _____ No ✓

APPENDIX 1

Page 2 of 10

Table B-1. LANL Critical Lift Plan (Cont.)

B. Pre-lift Checklist (Completed prior to each lift)

__ Crane's monthly and annual inspections current
__ Periodic maintenance complete
__ Crane inspected __ Site-control in-place
__ Load test verified __ Spotters in-place
__ Operator is qualified __ Signal person identified
__ Riggers are qualified __ Head-height checked
__ Rigging proof tested __ Hoist-height checked
__ Proof tests verified __ Signatures procured
__ Rigging inspected __ Tailing info provided
__ Annual rig. Insp. current __ Job briefing held
__ Work zones identified __ Team is ready for lift

C. Personnel & Environmental Exposure

1. Any radiation exposure hazards? Yes
2. Any chemical exposure hazards? Yes
3. Any explosive hazards? No
4. Any exposure hazards to the public? No

If YES to any of the above, what precautions are needed?
1. RWP
2. IWD

5. Is EM&R notification required? No

When? N/A

Where? N/A

Who? N/A

D. Load Identification and Information

1. Load condition: ____ New ___ Used ✓ N/A
2. Wt. empty: N/A
3. Wt. of contents: N/A
4. Wt. of lifting beam: N/A
5. Wt. of rigging: N/A
6. Wt. of excess load material: N/A
7. Wt. of temporary lift frames: N/A
8. Total weight: ≥ 468 lb ≤ 624 lb
9. Source of load weight information: _____
WCRRF drum scale _____
(drawings, calculations, dynamometers, etc.)
10. Page on drawing: N/A
11. Revision #: N/A Revision date: N/A
12. Center of gravity has been identified: N/A
13. Dimensions: Standard 55-gal drum
14. Location and type of lift points are shown:
See attached figure

E. Operating Equipment to be Used

1. Crane mfg. and model: Drum Lift: LANL Designed and Built
2. Crane S/N: N/A ID-No: Drum -01
3. Crane capacity: 624 lb
4. Trolley/travel restrictions: N/A
5. Load is what percent of crane capacity? 75-100 %
6. Are any crane, hoist, and equipment load charts required for this lift? Y____N✓
Are they available to the operator?
Y____N____ N/A✓

APPENDIX 1

Page 3 of 10

Table B-1. LANL Critical Lift Plan (Cont.)	
F. Rigging	**I. Sketches & Drawings**
1.Hitch type(s): N/A	In accordance with DOE-STD-1090-2007, *Hoisting and Rigging Standard,* rigging sketches must include--as applicable:
2. Sling type: WR ___ FW ___ RS __ Chain ___ (If more than one, write the number of each type on the appropriate line) N/A	1. Identification and rated capacity of slings, lifting bars, rigging accessories, and below-the-hook lifting devices. N/A
3. Number of slings: N/A	2. Load-indicating devices. N/A
4. Size: N/A	3. Load vectors (Sling Tension). N/A
5. Shackle sizes: N/A	4. Lifting points. N/A
6. Shackle rated capacity: N/A tons	5. Sling angles N/A
7. Sling assembly rated capacity: N/A lbs.	6. Boom and swing angles N/A
8. Shackle secured to load by: N/A	7. Methods of attachment. N/A
9. Shackle & lifting lug mating are OK? N/A	8. Crane orientations. N/A
10. Temporary lift frames & weights: N/A	9. Other factors affecting equipment capacity, such as load path sketch, key point heights, floor or soil bearing capacity, etc. Yes
11. Supports & load grillages shown? N/A	10. Calculate and provide the rated capacity of equipment in the configuration in which it will be used. Yes Make sure that these items are included at a minimum.
G. Operating Area	**J. Notes/Things To Do**
1. Are obstructions present? No 2. Are clearance issues present? No 3. Is the lift area populated? No 4. Action items for 1, 2, & 3: Drawing provided	N/A
H. Practice Lift Required?	
1. Describe the lift N/A	
2. Team members involved in the practice lift must be those who will be involved in the actual lift. Are all of those members present? N/A	

APPENDIX 1

Page 4 of 10

Table B-1. LANL Critical Lift Plan (Cont.)

K. Personnel Assignments
List names of all persons involved in the lift and identify their roles (Operator, Signaler, Person In Charge [PIC], etc.). All must be qualified.

Name	Z Number	Role	Training Verified		Comments/Notes
			Y	N	
			Y	N	
			Y	N	
			Y	N	
			Y	N	
			Y	N	
			Y	N	

L. Review and Approval. List all that apply. (Must include the PIC and one other qualified person at a minimum and may include the health and safety rep., Responsible Line Manager [RLM], First Line Manager [FLM], responsible oversight org. rep., quality assurance rep., or others as required)

	Z Number	Organization	Concurrence / Approver's Signature
Responsible Line Manager		LTP-DDP	/s/John Guadagnoli /Randy Axtell
Crane Program SME	219935	OSH-ISH	/s/Clay Davis
IHS SME	120199	DSESH-EWMO	/s/Robert Gardner Winkle
CSE	233208	ES-EWMO	/s/Shawn West
PIC 1 (Qualified Crane Operator)	240092	WCRRF LTP DDP	/s/Clayton Mullins
Operator	240092	WCRRF LTP DDP	/s/Joe Quintana
WCRRF SOS	240092	WCRRF LTP DDP	/s/Clayton Mullins

APPENDIX 1

Page 5 of 10

M. Pre-lift Meeting					
Name	**Z Number**	**Signature**	**Name**	**Z Number**	**Signature**

APPENDIX 1

Page 6 of 10

Load Schematic & Rigging Method

Load Schematic & Rigging Method

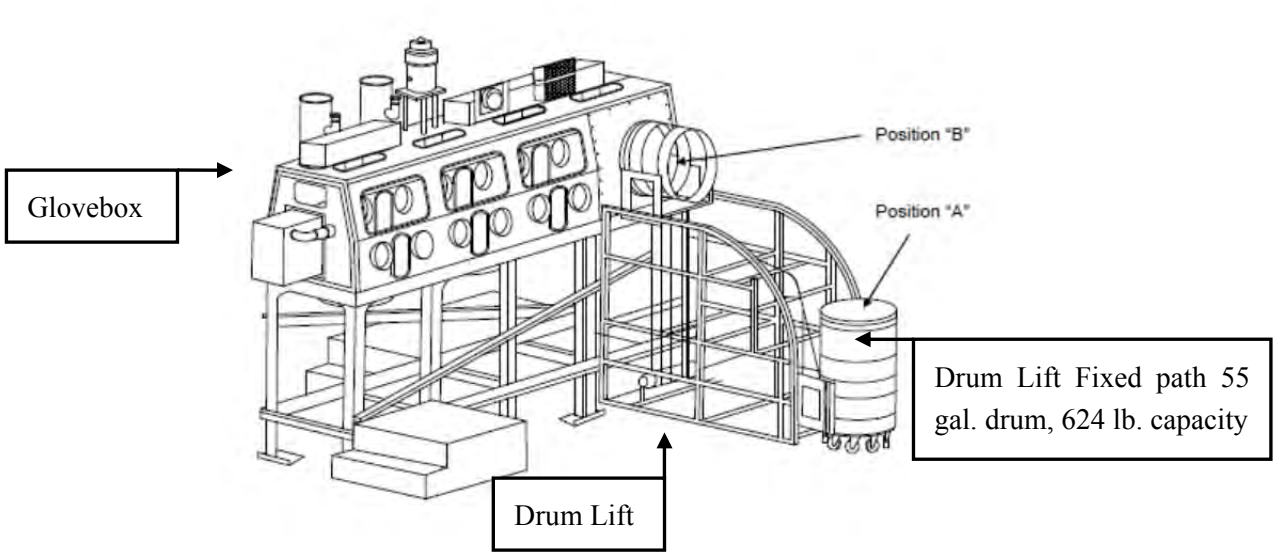

APPENDIX 1
Page 7 of 10

Load Travel Path/Personnel Placement

See Load Handling Sequence and Procedures

APPENDIX 1
Page 8 of 10

Load Handling Sequence & Procedures

Purpose

This critical lift plan is used for loading degraded or loss of integrity drums or drums that satisfy the critical lift requirements of P101-25 with the WCG Drum Lift as required by ABD-WFM-006, Technical Safety Requirements (TSRs) for Waste Characterization, Reduction, and Repackaging Facility (WCRRF). This critical lift plan must be used to lift and lower degraded drums with waste material using the WCG Drum Lift. This plan will be used to handle and prepare waste drums at Area-G and at WCRRF for a critical lift.

General Guidelines/Notes

This critical lift plan has been prepared in accordance with P101-25, Cranes, Hoists, Lifting Devices, and Rigging Equipment.
Drum handling operations involving degraded/loss of integrity drums or drums that satisfy the requirements for a critical lift in accordance with P101-25 (e.g., drums weighing greater than 468 lb) at WCRRF are performed using approved procedures and lifting equipment specifically designed for this operation.
The following information **SHALL** be reviewed during the critical lift pre-job brief:

1. All lifting and signaling **SHALL** be performed by a qualified operator. Supervision will be by a designated Qualified Crane Operator and Rigger Person-In-Charge (PIC) and documented on the WCRRF WCG Critical Lift Plan Concurrence Sheet.
2. The WCG Drum Lift and drums **SHALL** be visually inspected by the operator and/or qualified PIC. Any noted substandard item **SHALL** be cause for suspending operations until an acceptable replacement is acquired.
3. The rigging procedure **SHALL** be followed. Where changes are required due to site conditions, the changes **SHALL** be reviewed and approved by the Qualified Crane Operator and Rigger PIC.
4. The weight of the load **SHALL** include the 55 gal drum and lead blankets (if used for shielding purposes). In no case should the lift exceed 624 lb.
5. Communications between the WCG pendant operator and PIC **SHALL** be clear and unobstructed. The primary system **SHALL** be voice communications. Only designated, qualified signalers **SHALL** give signals to the operator. However, the operator **SHALL** obey a stop signal at all times, no matter who gives the signal.
6. A pre-lift meeting with all responsible persons **SHALL** be held before the lifts and each person **SHALL** be assigned specific duties and sign the pre-job sheet.
7. The equipment to be used for this lift will be as applicable: WCG Drum Lift.

APPENDIX 1

Page 9 of 10

Project Notes and Specifications

1. The primary goal is to perform a safe lift in a timely manner.
2. This lift has been frequently performed with equipment stated in this plan. A preliminary lift is not required but if any discrepancies are noted during the lift, the project **SHALL** be stopped and re-evaluated by the Qualified Operator, and Qualified Crane Operator and Rigger PIC.
3. The drum **SHALL** be positioned secured in the WCG Drum Lift to facilitate SAFE and efficient operation. The drum lift pendant operator **SHALL** announce operation of the lift before commencing raising/lowering of the drum and all personnel **SHALL** stand clear and to the side of drum movement. The work area for assembling the payload **SHALL** be limited to personnel necessary for the operation. (Example: Operator, signal personnel, PIC, and RCTs.)
4. The lift requires understanding by the entire crew. This lift plan **SHALL** be thoroughly reviewed by the personnel performing the lift and the Critical Lift / Pre-Lift Meeting **SHALL** be conducted before the lift to ensure that all personnel are aware of their assigned duties. Each person involved in the lift must attend the meeting and sign the attendance sheet.

Competent Person / Lift Supervisor

The responsible person for this lift is the designated Qualified Crane Operator and Rigger PIC.

Emergency Action Plan

1. In the event that an emergency occurs, all operations **SHALL** be discontinued and any raised load **SHALL** be lowered/secured, if possible. For specific casualties, operators will also perform required actions of applicable procedures in the WCRRF Response Manual.
2. Each portion of the lift presents a slightly different set of variables as related to a direction and area where the components may be set down temporarily during an emergency.
3. During the pre-lift meeting the operators, riggers, and spotter are to specifically discuss emergency actions at various points during the lift. If the raised load has to be secured the operator will do so and contact the RCT and Qualified Crane Operator and Rigger PIC. All non-essential personnel are to be kept clear of the lift area.
4. The operator and rigging personnel will not resume the lift operations without approval from the RCT and the Qualified Crane Operator and Rigger PIC.
5. In the event of an equipment malfunction and the drum cannot be lowered/secured:
   - The operation will be placed in a safe configuration.
   - The waste will be unloaded from the drum and the drum will be manually removed from the drum lift, if possible, or the CSE will be notified for the applicable actions.

APPENDIX 1

Page 10 of 10

Hazard Assessment

This lift has been reviewed in great detail to ensure a safe lift and minimize hazards. The following items have been identified as unique for this lift.

In no case **SHALL** material being lifted weigh more than 624 lb. (drum + lead shielding).

Test Lift—A test lift is not required for this operation.

Travel Path—At the pre-job/lift briefing a spotter(s) **SHALL** be designated to observe the load along the entire travel path (consider slopes and uneven surfaces).

Overhead Instructions—The Qualified Crane Operator and Rigger PIC and rigging crew **SHALL** physically verify the travel path is clear of overhead obstructions before beginning the lift.

Working Around the Load (Cone of Safety) - Absolutely NO ONE **SHALL** be under the load, or while it is being raised, lowered, or moved. The Qualified Crane Operator and Rigger PIC **SHALL** ensure that the area (in front of the WCG Drum Lift) is clear of non-essential personnel. Specific placement of operators and RCTs **SHALL** be established during the pre-lift meeting.

Securing the Drum Lifting Assembly—The rigging crew s **SHALL** inspect the WCG Drum Lift before lifting a drum.

Equipment List

Ensure the following equipment is present, has undergone physical inspection, is properly calibrated and is ready to support the critical lift steps:

- WCG Drum Lift

Work Steps for Loading a 55 Gallon Drum Using the WCG Drum Lift

Step 1 Verify the drums weighs less than 624 lb.

Step 2 Obtain key from key box, Insert key, and turn on the power to the drum lift.

Step 3 Using the drum lift pendent, lower the drum lift to the lower limit switch or until the bellyband of the lift cradle can grasp the drum evenly.

Step 4 Position the drum on the drum lift with the drum bolt ring accessible for lid removal when inside the glovebox.

Step 5 Close and secure the bellyband, ensuring the bag-off sleeve does not get caught on the bellyband.

Step 6 Raise the drum to the horizontal port and stop, leaving an adequate gap (approximately 12 inches) to mount the bag-off sleeve to the horizontal port.

Step 7 Bag on the parent drum in accordance with this procedure.

Step 8 Turn off the power to the drum lift, remove key, and place in key box.

APPENDIX 2

Page 1 of 1

WCRRF ALLOWED CONTAINER TYPES FOR REMEDIATION

The following "allowed" container types may be remediated in the WCRRF glovebox because there is no concern for hydrogen buildup within the container:

- Containers without a gasket (e.g. containers with slip lids, paint cans, "produce cans" and other similar containers) of any size
- Containers of any size with slip-on lids (with or without a gasket)
- Empty containers of any size
- Fiber board containers of any size
- Sealed containers of any size not containing TRU waste or free liquids
- Any containers with a volume < (less than) 4 liters
- Unvented 5- to 30-gal waste packages

APPENDIX 3
Page 1 of 1

EXAMPLE PREOPERATIONAL INSPECTION RECORD FOR OVERHEAD CRANES AND HOISTS

NOTE: Use these buttons to print or save the form, DO NOT use the browser tool bar. SAVE PRINT

Form 1489

Los Alamos NATIONAL LABORATORY EST. 1943

Preoperational Inspection Record for Overhead Cranes and Hoists

Inspector	Date Inspected	Location
Manufacturer and Type		Serial Number and Rated Capacity

Current Inspections

- Current Annual ANSI/OSHA Inspection Date: _____
- Current Annual Mechanical and Electrical (*if applicable*) PM's Date: _____
- Current Monthly Inspection Date: _____

Main or Auxiliary Hoist Rope			
• Is there any distortion such as kinking, crushing, unstranding, bird-caging, heat damage, or core protrusion?	☐ Yes	☐ No	☐ N/A
• Are there six randomly distorted broken wires per rope lay or three broken wires per strand per rope lay?	☐ Yes	☐ No	☐ N/A
• Is there wear of 1/3 the original diameter of outside individual wires?	☐ Yes	☐ No	☐ N/A
Load Chain			
• Is there elongation or distortion?	☐ Yes	☐ No	☒ N/A
• Any twisting, corrosion, pitting, or discoloration?	☐ Yes	☐ No	☒ N/A
• Any gouges, nicks, or weld splatter?	☐ Yes	☐ No	☒ N/A
Spooling, Reeving			
• Is there cross-winding?	☐ Yes	☐ No	☐ N/A
• Are the rope stays together and in alignment?	☐ Yes	☐ No	☐ N/A
• Is there any double winding or overwinding?	☐ Yes	☐ No	☐ N/A
• Is there minimum of two wraps at lowest position?	☐ Yes	☐ No	☐ N/A
Anchoring			
• Anchoring secured or installed in accordance with manufacturer's recommendations?	☐ Yes	☐ No	☐ N/A
• Is there minimum of two wire rope clips?	☐ Yes	☐ No	☒ N/A
Main or Auxiliary Hook			
• Is the throat opening not greater than 15% of normal?	☐ Yes	☐ No	☒ N/A
• Is there less than ten-degree twist out of plane?	☐ Yes	☐ No	☒ N/A
• Any deformities or cracks?	☐ Yes	☐ No	☒ N/A
• Are the safety latches present and functional?	☐ Yes	☐ No	☒ N/A
Markings			
• Are the rated capacities conspicuously posted?	☐ Yes	☐ No	☐ N/A
• Are the controllers properly marked? Are remote crane controllers affixed a label which contains the following information? (crane manufacturer, location, and other information specific to the unit being operated) _____	☐ Yes	☐ No	☐ N/A
• Is the main disconnect properly marked?	☐ Yes	☐ No	☐ N/A
Are the items listed functional?			
• Brakes	☐ Yes	☐ No	☐ N/A
• Controllers	☐ Yes	☐ No	☐ N/A
• Limit switches	☐ Yes	☐ No	☐ N/A
• Lights, warning devices	☐ Yes	☐ No	☒ N/A
• Trolley	☐ Yes	☐ No	☐ N/A
• Bridge	☐ Yes	☐ No	☒ N/A
• Main or auxiliary load	☐ Yes	☐ No	☐ N/A

Remarks:

Form 1489 (12/10)

EXAMPLE

APPENDIX 4
Page 1 of 1

VOLUMES OF CYLINDRICAL INNER CONTAINERS NEAR 4 LITERS

Diameter		Height		Volume (liters)
3”	7.6 cm	12”	30.5 cm	< 4
3”	7.6 cm	18”	45.7 cm	< 4
4”	10.7 cm	12”	30.5 cm	< 4
4”	10.7 cm	18”	45.7 cm	> 4
4.5”	11.4 cm	12”	30.5 cm	< 4
4.5”	11.4 cm	14”	35.6 cm	< 4
4.5”	11.4 cm	16”	40.6 cm	> 4
4.5”	11.4 cm	18”	45.7 cm	> 4
5”	12.7 cm	8”	20.3 cm	< 4
5”	12.7 cm	10”	24.5 cm	< 4
5”	12.7 cm	12”	30.5 cm	> 4
5”	12.7 cm	14”	35.6 cm	> 4
5.5”	14 cm	8”	20.3 cm	< 4
5.5”	14 cm	10”	24.5 cm	> 4
5.5”	14 cm	12”	30.5 cm	> 4
6”	15.2 cm	8”	20.3 cm	> 4
6”	15.2 cm	10”	24.5 cm	> 4
6.5”	16.5 cm	8”	20.3 cm	> 4
7”	17.8 cm	6.5”	16.5 cm	> 4

<4 = less than 4 liters and does <u>not</u> require remediation

> 4 = greater than 4 liters and requires remediation

APPENDIX 5

Page 1 of 1

FLOWCHART FOR PROCESSING OF HIGH DOSE ITEMS OF MIXED MATERIAL TYPES

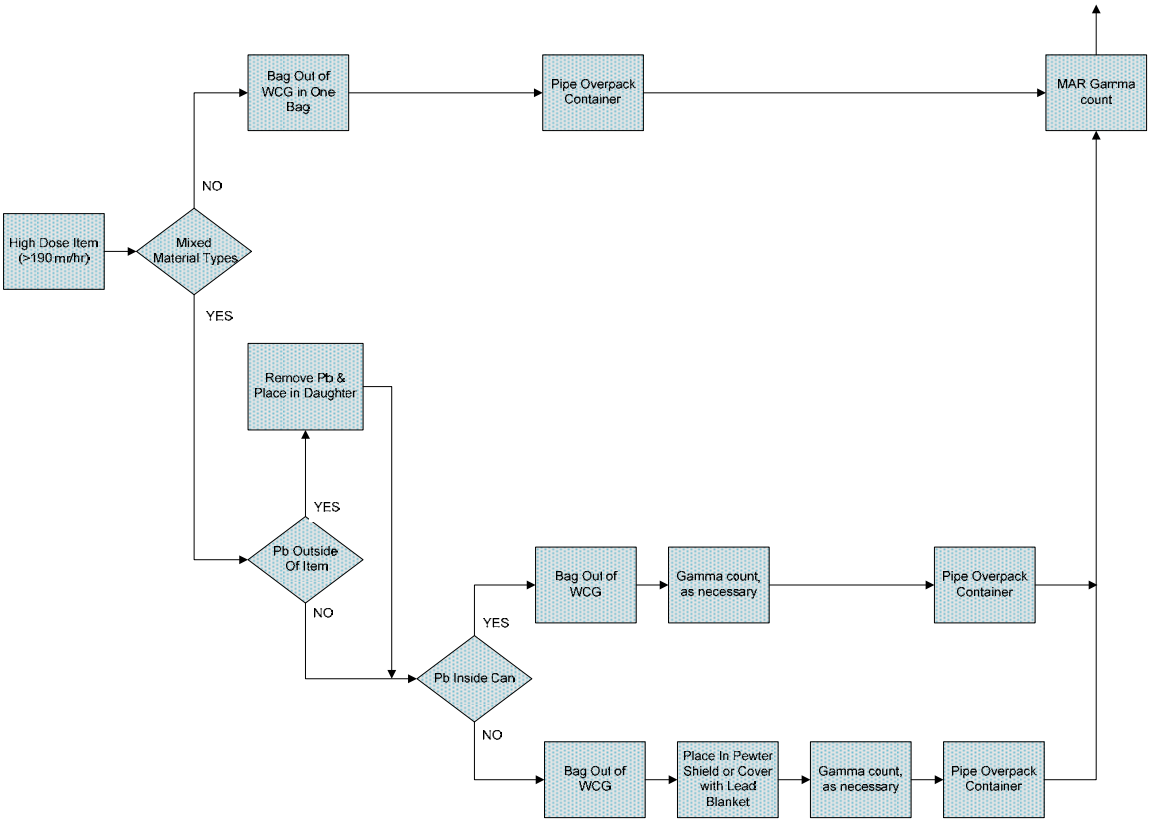

APPENDIX 6
Page 1 of 1

ADMINISTRATIVE CONTROL LOCK LOG SHEET

(Used when needed to track component manipulation)

NOTE: Refer to P315, Conduct of Operations Manual, Attachment 8, Section 8.1.5, for additional guidance.

Facility/Location: _____

Component No.	Authorized By (Shift Mgr.)	New Position	Positioned By	Verified By	Date/ Time	Restored By	Verified By	Date/ Time	Authorized By (Shift Mgr.)

APPENDIX 7

Page 1 of 1

MANUAL DRUM MOVEMENT SPECIAL INSTRUCTIONS

NOTE 1 *The following requirements below have been pre-approved in accordance with EP-DIV-Policy-20057, EWMO Health and Safety Policy.*

NOTE 2 *Any manual drum movement modifications or new scenario that may arise **SHALL** be performed in accordance with EP-DIV-Policy-20057.*

Manual Drum Movements within Transportainers:

- Two-person rule and a drum dolly chock to slide drums to and from the drum dolly and spill pallets
- Two-person rule to slide drums from one pallet to another
- Two-person rule to slide drums on the floor

Manual Drum movements to and from Scale:

- Mechanical means only

Manual Drum Movements between the 50-69 RBA and the CA

- Mechanical means
- Empty POCs mechanical mean only
- Empty 55 and 85s from pallet to dolly or dolly to pallet using two-person rule with a dolly chock

Manual Drum Movements to center of Scale

- Utilize mechanical means (e.g., drum grabber or versa lift)
- Two-person rule to slide drum to and from the center of the scale

Manual Movement of Drums onto Lift Table under the WCG

- Utilize versa lift, (if available) otherwise implement two-person rule to slide drum to and from the drum dolly and lift table with metatarsal guards

Manual Movement of Drums in Transport Vehicle for Receipt Inspection and Unloading

- Two-person rule to slide drums

ATTACHMENT 1
Page 1 of 4

WCRRF WCG WASTE PROCESSING DATA SHEET

4.1[6][B] Parent Waste Container No.: _____

6.2[4] Date Processed: _____

4.1[6][B] Prohibited Items:
☐ Sealed Containers > 4L ☐ Liquids ☐ Pressurized Containers ☐ N/A

4.1[6][B] Parent Waste Container RCRA Designations: _____

4.3[1]/4.3[2] **($)** TA-50-69 is in the OPERATION or WARM STANDBY MODE (TSR 1.2) ☐ OPERATIONS ☐ WARM STANDBY

4.3[4][B] Platform Scale: Equipment No.: _____
Cal. Due Date: _____

4.3[5][B] **($)** Three 1-Liter containers carbon spheroids or MET-L-X _____ (Initial and Date)
in WCG: (SAC 5.10.1.7.1)

4.3[6] **($)** Stationary Fire Watch has been established: ☐ N/A
(> 300 PE-Ci Equivalent Combustible) _____ (Initial and Date)
(SAC 5.10.1.7.2)

4.3[7 [A] Parent Waste Container degraded, loss of integrity,
or weighs greater than 468 lb but less than or equal to 624 lb:
☐ YES ☐ NO ☐ N/A

4.3[8][D] WCG glove and bag-in/bag-out bag inspection: ☐ SAT ☐ UNSAT ☐ N/A

Performed By: _____ / _____ / _____ / _____
Waste Handling Tech (print) Signature Z # Date

ATTACHMENT 1
Page 2 of 4

4.1[6][B] Parent Waste Container No.: _____

5.[18] Prepared Parent Drum Weight (lb) including items secured to drum top, as applicable: _____ lb

6.2[5][A] Parent Drum Lead Blanket Weight (lb): _____ lb ☐ N/A

6.2[5][B]/ 6.2[6] Total Parent Drum Weight (lb) _____ lb

6.2[7] **($)** Total Parent Drum Weight < 624 lb (SR 4.5.1): ☐ SAT ☐ UNSAT

6.2[16] Retaining clips in place ☐ SAT ☐ UNSAT

6.2[18][D] Drum lift hinge pin retaining clip replaced._____/_____/_____ ☐N/A
Initials Z# Date

6.2[26] Approval to leave a parent drum attached to the WCG overnight:

_____/_____/_____/_____
EWMO-FOD (print) Signature Z # Date

ATTACHMENT 1
Page 3 of 4

4.1[6][B] Parent Waste Container No.: _____

Daughter Drums					
10.1[4]/10.2[4]	Daughter Drum No.				
10.1[4]	Daughter Drum Filter No.				
10.1[4]	Daughter Drum Bag Filter No.				
10.1[4]	Daughter Drum Purchase Order No.				
10.1[13][C]	WCG Fire Watch Stationed	☐ YES		☐ NO	☐ N/A
10.1[14][C][d]3/11.1[3]	WCG Fire Watch Secured	☐ YES		☐ NO	☐ N/A
10.2[4]	POC bag-on bag: Manufacturer				
	Model No.				
	Serial No.				
	Date of Manufacture				
10.2[5]	POC ID No				
10.2[6]/10.2[7][B]	POC Item Description				
10.2[13]	POC Assembly closed per Manufacturer's instructions. (Initial and Z#)				
10.2[14]	POC Assembly Gross Weight (lb)				
10.2[15]	POC Rad. Survey Results (mrem/hr)				
10.3[3][A]	Approx. Containerized Liquid Vol./Units				
10.3[5][A]	Free Liquid Volume/Units				
10.3[7][A]	Opaque/Non-penetrable Item Description:				
10.3[9][A]	PCB-contaminated Waste Description				
10.3[9][B]	PCB Item ID No.				
10.3[10]	Remaining Waste Description				
10.3[13]/10.4[10]/ 10.5[4]/10.6[10]	Daughter Drum % Full (%)				
10.5[3]/10.6[2]	Description Waste Added During Processing				

ATTACHMENT 1
Page 4 of 4

4.1[6][B] Parent Waste Container No.: _____

Comments: _____

_____
_____
_____
_____
_____
_____
_____
_____

11.1[1] Performed By: _____ / _____ / _____ / _____
Waste Handling Tech (print) Signature Z # Date

11.1[8] Reviewed By: _____ / _____ / _____ / _____
SOS or designee (print) Signature Z # Date/Time

ATTACHMENT 2
Page 1 of 2

WCRRF WCG DRUM LIFT INSPECTION DATA SHEET

6.1[2] Inspection Date: _____

6.1[4] Previous number of shaft bolt threads exposed:
- Upper Pulley Bolt Threads visible: _____
- Middle Pulley Bolt Threads visible: _____
- Lower Pulley Bolt Threads visible: _____

6.1[5] Current number of threads exposed out the end of the shaft bolt locknut:
- Upper Pulley Bolt Threads visible: _____
- Middle Pulley Bolt Threads visible: _____
- Lower Pulley Bolt Threads visible: _____

6.1[6] Shaft bolt end is flush with or extends out of the outer end of the shaft bolt locknut
- Upper Pulley Bolt Threads visible: ☐ YES ☐ NO
- Middle Pulley Bolt Threads visible: ☐ YES ☐ NO
- Lower Pulley Bolt Threads visible: ☐ YES ☐ NO

6.1[7] Shaft bolts do not show any sign of wear between the shaft bolt and the support flange (e.g., shaft not perpendicular to the flange plate):
- Upper Pulley Assembly: ☐ SAT ☐ UNSAT
- Middle Pulley Assembly: ☐ SAT ☐ UNSAT
- Lower Pulley Assembly: ☐ SAT ☐ UNSAT

6.1[9] New upper wire rope damage observed: ☐ YES ☐ NO

TABLE 3-1, UPPER WIRE ROPE DAMAGE

Description of Wire Rope Damage (e.g., wire break, corrosion, or pinch) (6.1[3]/6.1[10])	Previously Identified Damage (√) (6.1[3])	Damage Location from Hoist Drum (inches) (6.1[10])	Distance from damage to nearest wire break (inches) (6.1[10])

ATTACHMENT 2
Page 2 of 2

6.1[2] Inspection Date: _____

6.1[12] New lower wire rope damage observed: ☐ YES ☐ NO

TABLE 3-2, LOWER WIRE ROPE DAMAGE

Description of Wire Rope Damage (e.g., wire break, corrosion, or pinch) (6.1[3]/6.1[13])	Previously Identified Damage (√) (6.1[3])	Damage Location from Hoist Drum (inches) (6.1[13])	Distance from damage to nearest wire break (inches) (6.1[13])

6.1[14][A]/ 6.1[15] There is no more than one wire break within a 2-in. span along the wire rope:
☐ SAT ☐ UNSAT

Comments: _____

6.1[16][B]/ 11.1[1] Performed By: _____ / _____ / _____ / _____
Operator (print) Signature Z # Date

11.1[8] Reviewed By: _____ / _____ / _____ / _____
SOS or designee (print) Signature Z # Date/Time

ATTACHMENT 3
Page 1 of 1

WCRRF WCG BREACHING (OPENING) UNVENTED, SEALED WASTE PACKAGES

10.1[10][A] Parent Drum Container ID: _____ Page _____ of _____

Unvented-Sealed Waste Package type: (10.1[10][B])	☐ Metal 5- to 30-gal ☐ Non-metallic 5- to 30-gal ☐ < 5 gal	☐ Metal 5- to 30-gal ☐ Non-metallic 5- to 30-gal ☐ < 5 gal	☐ Metal 5- to 30-gal ☐ Non-metallic 5- to 30-gal ☐ < 5 gal	☐ Metal 5- to 30-gal ☐ Non-metallic 5- to 30-gal ☐ < 5 gal
($) Non-spark producing tools available in WCG. (SAC 5.10.1.6.1) (10.1[10][C])	☐ YES ☐ NO			
($)WCG electrical receptacles de-energized and locked open/off. (SAC 5.10.1.6.2) (10.1[10][D])	☐ SAT ☐ UNSAT			
($) 5- to 30-gal waste package lid restraint inspected for degradation (e.g., no indication of cracked parts, missing fasteners, loose or frayed parts, excessive wear, or unusual deformation), and determined to be capable of restricting lid. (SAC 5.10.1.5.1) (10.1[11][A])	☐ SAT ☐ UNSAT ☐ N/A < 5 gal	☐ SAT ☐ UNSAT ☐ N/A < 5 gal	☐ SAT ☐ UNSAT ☐ N/A < 5 gal	☐ SAT ☐ UNSAT ☐ N/A < 5 gal
($) Waste package lid restraint attached to waste package and proper installation verified. (SAC 5.10.1.5.1) (10.1[11][B])	☐ SAT ☐ UNSAT ☐ N/A < 5 gal	☐ SAT ☐ UNSAT ☐ N/A < 5 gal	☐ SAT ☐ UNSAT ☐ N/A < 5 gal	☐ SAT ☐ UNSAT ☐ N/A < 5 gal
($) Time 5- to 30-gal lid and lid restraint removed from the waste package. (Start Time) (SAC 5.10.1.5.2) or SAC 5.10.1.6.3) (10.1[11][I])	_____ ☐ N/A < 5 gal	_____ ☐ N/A < 5 gal	_____ ☐ N/A < 5 gal	_____ ☐ N/A < 5 gal
($) Time since 5- to 30-gal lid and lid restraint removed from the waste package. (SAC 5.10.1.5.2) or SAC 5.10.1.6.3) (10.1[11][K])	_____ ☐ N/A < 5 gal	_____ ☐ N/A < 5 gal	_____ ☐ N/A < 5 gal	_____ ☐ N/A < 5 gal
($) Elapsed time since 5- to 30-gal lid and lid restraint removed from waste package is ≥ 30 minutes, and glovebox operations may resume and WCG electrical receptacles may be re-energized. (SAC 5.10.1.5.2) or SAC 5.10.1.6.3) (10.1[11][K])	☐ SAT ☐ UNSAT ☐ N/A < 5 gal	☐ SAT ☐ UNSAT ☐ N/A < 5 gal	☐ SAT ☐ UNSAT ☐ N/A < 5 gal	☐ SAT ☐ UNSAT ☐ N/A < 5 gal
($) Time < 5-gal lid removed from the waste package. (Start Time) (SAC 5.10.1.6.3) (10.1[12][B])	_____ ☐ N/A > 5 gal	_____ ☐ N/A > 5 gal	_____ ☐ N/A > 5 gal	_____ ☐ N/A > 5 gal
($) Time since < 5-gal lid removed from the waste package. (End Time) (SAC 5.10.1.6.3) (10.1[12][C][a])	_____ ☐ N/A > 5 gal	_____ ☐ N/A > 5 gal	_____ ☐ N/A > 5 gal	_____ ☐ N/A > 5 gal
($) Elapsed time since < 5-gal lid removed from waste package is ≥ 30 minutes, and WCG electrical receptacles may be re-energized. (SAC 5.10.1.6.3) (10.1[12][C][a])	☐ SAT ☐ UNSAT ☐ N/A > 5 gal	☐ SAT ☐ UNSAT ☐ N/A > 5 gal	☐ SAT ☐ UNSAT ☐ N/A > 5 gal	☐ SAT ☐ UNSAT ☐ N/A > 5 gal

Comments: _____

11.1[1] Performed By: _____ / _____ / _____ / _____
Operator (print) Signature Z # Date

11.1[8] Reviewed By: _____ / _____ / _____ / _____
SOS or designee (print) Signature Z # Date/Time

ATTACHMENT 4
Page 1 of 1

WCRRF WCG BREACHING (OPENING) 5- to 30-gal
METAL UNVENTED, SEALED WASTE PACKAGE SURVEILLANCE

10.1[10][E][a] Waste Container ID: _____

10.1[10][E][b] **($)** 55-gal parent drum containing an unvented-sealed METAL 5- to 30-gal waste package grounded to the WCG with a grounding strap that is firmly attached at all ends to clean-bare metal surfaces. (SR 4.6.1) ☐ SAT ☐ UNSAT

10.1[10][E][c] **VERIFY** that the grounding strap is attached ☐ SAT ☐ UNSAT

10.1[11][C] **($)** Unvented-sealed METAL 5- to 30-gal waste package grounded to the WCG with a grounding strap that is firmly attached at all ends to clean-bare metal surfaces. (SR 4.6.1) ☐ SAT ☐ UNSAT

10.1[11][D] **VERIFY** that the grounding strap is attached ☐ SAT ☐ UNSAT

11.1[11[E] Verified By: _____ / _____ / _____ / _____
Print Signature Z # Date

Comments: _____

11.1[1] Performed By: _____ / _____ / _____ / _____
Waste Handling Tech (print) Signature Z # Date

11.1[2][D] Reviewed By: _____ / _____ / _____ / _____
CSE (print) Signature Z # Date

11.1[6][A] Acceptance criteria satisfied: ☐ YES ☐ NO

11.1[8] Reviewed By: _____ / _____ / _____ / _____
SOS or designee (print) Signature Z # Date/Time

ATTACHMENT 5
Page 1 of 1

WCRRF PROHIBITED ITEM COLLECTION DRUM DATA SHEET

Container No. (10.3[8][B][e]):	Type (10.3[8][B][e]): ☐ Pressurized Container ☐ Aerosol Cans ☐ Other: _____		Date Created (10.3[8][B][e]):	Page _____ of _____

Date Item Added (10.3[8][B][e])	Item ID No. (10.3[8][B][e])	Parent Container No. (10.3[8][B][e])	Parent Accumulation Start Date (10.3[8][B][e])	Parent EPA Codes (10.3[8][B][e])	Item Description (10.3[8][B][e])	Item Shape (10.3[8][B][e])	Item Size (10.3[8][B][e])	Item Labeling (10.3[8][B][e])	Item Weight (lb) (10.3[8][B][e])	Initials/Z# (10.3[8][B][e])

ENCLOSURE 5

EP-WCRR-WO-DOP-1198, R0, IPC-1: WCRRF Waste Characterization Glovebox Operations

ENV-DO-14-0178

LA-UR-14-25295

Date: JUL 2 9 2014

Immediate Procedure Change (IPC) Cover		
Section 1 – Originator Request		
Document No.: EP-WCRR-WO-DOP-1198	Revision No.: 0	IPC No.: 1
Title: WCRRF Waste Characterization Glovebox Operations		

Description of need and requested action (Attach document mark-up and numbered additional sheets, if needed):

Revise procedure to correct step 6.1[14][A]. IF there are six randomly distributed broken wires in one rope lay or three broken wires in one strand in one rope lay. No additional hazards were incorporated in this ICP.

Originator Name (print):	Organization:	Z#:	Date:
Camillo R DiSalle	Procedures	200882	2-27-2014

Section 2 –Reviews

Discipline:	Name:	Signature:	Date:
Engineering	Shawn West	/s/ Shawn West	2-27-2014
WCRRF SOM	Randy Axtell	/s/ Randy Axtell RC	2/27/14
WCRRF Ops Manager	L Jalbert	/s/ L Jalbert	2/27/14

USQ/USI Number: ☒ N/A

Section 3– Final Approvals

FOD Concurrence: RC	Print Name and Title: Randy Axtell	Z#: 109185	Date: 2/27/14
☒ Permanent ☐ Limited Use	Effective Date: 2-27-2014 Expiration Date: NA		

Comments:

Responsible Line Manager Signature:	Print Name and Title:	Z#:	Date:
LT 2-27-14 ~~L Jalbert LTP DDP Ops Manager~~	L Jalbert LTP DDP Ops Manager	121997	

WCRRF Waste Characterization Glovebox Operations

Effective Date: 1-31-2014

NOTE *This procedure may be either a Moderate or High/Complex Hazard activity based on the anticipated radiation levels during the performance of the activity in accordance with P300 requirements.*

Hazard Class:	☐ Low	☒ Moderate	☒ High/Complex
Usage Mode:	☐ Reference	☐ UET	☒ Both UET & Reference

The Responsible Manager has determined that the following organizations' review/concurrence is required for the initial document and for major revisions a same type and level review is required. Review documentation is contained in the Document History File:

Environmental Stewardship
Engineering
Industrial Hygiene and Safety
LTP DDP Project Manager
Operations Support
Quality Assurance
Radiation Protection
Shift Operations Manager
Subject-Matter Expert
WCRRF Shift Operation Supervisor

Responsible Manager, LTP-DDP Operations Manager

Name (print)	Z#	Signature	Date
Lou Jalbert	121997	/s/ L Jalbert	1-30-2014

Classification Review: ☐ N/A ☒ Unclassified ☐ UCNI ☐ Classified _____

Name (print)	Z#	Signature	Date
Art Crawford	080070	/s/ Art Crawford	1-30-2014

Working Copy / Information Only (circle one)
Initials / Date: _____/_____

This document fully satisfies the requirements of P300, Integrated Work Management, in order to systematically describe the work activity, the associated hazards, and the controls that **MUST** be employed to mitigate the risks.

REVISION HISTORY

Document Number	Issue Date	Action	Description
EP-WCRR-WO-DOP-0233, R.0	May 2007	New Document	
EP-WCRR-WO-DOP-0233, R.1	June 2007	Major Revision	Added requirement to move assay equipment outside of the WCG exclusion zone when not in use. Added precaution to prevent addition of items from multiple parent drums into a single daughter drum or Pipe Overpack Container. Added precaution for prohibited items – Class 1 oxidizers such as nitrates and reactive flammables.
EP-WCRR-WO-DOP-0233, R.2	June 2007	Major Revision	Added steps for dispositioning of potential pressurized containers.
EP-WCRR-WO-DOP-0233, R3	July 2007	Major Revision	Added steps for disposition of liquids. Added steps for actions to be taken in the event that any actual or suspected Class 1 oxidizers, flammables, or Pyrophoric materials/items are encountered.
EP-WCRR-WO-DOP-0233, R4	July 2007	Major Revision	Made use of glovebag to process Pu-238 inside the WCG optional based on input from the Facility ALARA Review Committee.
EP-WCRR-WO-DOP-0233, R5	July 2007	Major Revision	Added precaution for performance of diligent glove surveys and periodic glovebox wipe-downs when handling Pu-238. Deleted requirement for use of glovebag to process Pu-238 inside the WCG. Deleted Note in Sect. 8.12 which referenced use of partially filled POC's if all waste is from the same waste stream.
EP-WCRR-WO-DOP-0233, R.6	October 2007	Major Revision	Added precaution to prohibit remediation of following in the WCG 1) sealed containers > 4 liters that have a positive locking mechanism, 2) sealed un-vented containers > 4 liters with free liquids. Added action steps to take if containers are encountered. Added "allowed" container types that may be remediated. Added Attachment 3: Real Time Radiography Review for "Un-Allowed" Contents
EP-WCRR-WO-DOP-0233, R.7	October 2007	Minor Revision	Revised wording in Attachment 3 for review of RTR data.
EP-WCRR-WO-DOP-0233, R.8	October 2007	Major Revision	Deleted requirement for Real Time Radiography review & Attachment 3 (will be performed IAW EP-WCRR-WO-DOP-0211). Added section for processing high dose waste items (> 190 mrem/hr) of mixed material types. Added Attachment 3: Flowchart for Processing of High Dose Items of Mixed Material Types.
EP-WCRR-WO-DOP-0233, R.9	TBD	Major Revision	Incorporate the WCRR TSR page change to allow the opening of unvented 5- to 30-gal waste packages inside of the WCG.
EP-WCRR-WO-DOP-0233, R.10	January 2008	Major Revision	Delete requirement for SOM & CSE review of grounding sealed containers prior to venting.
EP-WCRR-WO-DOP-0233, R.11	March 2008	Minor Revision	Revised page 7 of 31 to include processing items that are heavy.

REVISION HISTORY (continued)

Document Number	Issue Date	Action	Description
EP-WCRR-WO-DOP-0233, R12	April 2009	Major	Revise procedure to incorporate the WCRRF TSR Revision 1 changes to the minimum staffing requirements which allows for the SOM to be on-call in the Operations Mode and now includes the requirements for the SOS (requires that the SOS be present at WCRRF during the Operations Mode and on-call in the Warm Standby Mode). This revision does not introduce any new hazards in this procedure. Update forms are required.
EP-WCRR-WO-DOP-0233, R13	May 11, 2009	Minor Revision	Revise procedure to provide guidance for the operator that the glovebox operations may continue after opening a < 5 gal unvented container without waiting 30 min., but the WCG electrical receptacles cannot be re-energized until 30 min. has elapsed since the unvented container was opened. Add additional instructions for creating loops within the document to address waste packages imbedded within other waste packages. This revision does not introduce any new hazards.
EP-WCRR-WO-DOP-0233, R14	June 12, 2009	Major Revision	Revise procedure to incorporate editorial corrections and to provide instructions for what to do when a shielded container is encountered containing radioactive material that exceeds the RWP limit. Add instructions to record the Waste Container Identification Number on the applicable attachments. This revision does not introduce any new hazards.
EP-WCRR-WO-DOP-0233, R15	November 24, 2009	Major Revision	Revise procedure to incorporate instructions for establishing, controlling, and the disposition of the Prohibited Item Collection Drum. Make editorial corrections as necessary. This revision does not introduce any new hazards.
EP-WCRR-WO-DOP-0233, R16	Approved for Training	Major Revision	Revise procedure to perform a pH test using pH strips and change “absorbent” to “approved absorbent” in Appendix 2. Make editorial corrections as necessary. This revision does not introduce any new hazards.
EP-WCRR-WO-DOP-0233, R17	February 18, 2010	Major Revision	Revise procedure to incorporate instructions for recording additional information for the prohibited items placed in the prohibited item collection drum. Incorporate process improvements (step sequences) and make editorial corrections as necessary. This revision does not introduce any new hazards. Incorporate the requirements of P300 and the hazards and controls from JHA 0008741 into this procedure.

REVISION HISTORY (continued)

Document Number	Issue Date	Action	Description
EP-WCRR-WO-DOP-0233, R18	March 22, 2010	Major Revision	Revise procedure to incorporate instructions for glovebox glove inspections and make editorial corrections as necessary. This revision does not introduce any new hazards.
EP-WCRR-WO-DOP-0233, R19	Training Only	Major Revision	Revise procedure to incorporate formality of operations into the procedure and incorporate the four parts of an integrated work document into the procedure in accordance with P300. Change title to WCRRF Waste Characterization Glovebox Operations. This revision is a total rewrite and revision bars have been omitted. This revision does not introduce any new hazards. This revision supersedes the following procedures: • EP-WCRR-WO-DOP-0223, Revision 4 • EP-WCRR-WO-DOP-0231, Revision 4 • EP-WCRR-WO-DOP-0232, Revision 8 • EP-WCRR-WO-DOP-0233, Revision 18
EP-WCRR-WO-DOP-0233, R20	October 27, 2010	Major Revision	Revise procedure to remove the requirements of SAC 5.10.1.2(1) in accordance with TSR Page Change 1.2, the fire blanket and MET-L-X is no longer a TSR requirement. The MET-L-X is being left as an administrative control. Make editorial corrections such as format changes. This revision does not introduce any new hazards.
EP-WCRR-WO-DOP-0233, R.21	November 2, 2010	Major Revision	Revise procedure to require that Building TA-50-69 is in the OPERATION mode for all activities in the procedure. Remove the Note in front of Step 4.3[7]. Add “approximately halfway” to Step 5.[9]. Change WARNING before Step 6.1[11] to indicate that there is no drum on the lift at this time. Revise Step 10.3[3] to remove requirement for testing a small portion of liquid and provide additional guidance for absorbing liquid. Make editorial corrections such as format changes. This revision does not introduce any new hazards.
EP-WCRR-WO-DOP-0233, R.22	November 8, 2010	Minor Revision	Revise procedure to modify hold tag note in Section 10.3 and modify step 10.3[2]. This revision does not introduce any new hazards.
EP-WCRR-WO-DOP-0233, R.23	February 8, 2011	Major Revision	Revise procedure to correct the TSR references and to allow the replacement of WCG bags in the WARM STANDBY mode. This revision does not introduce any new hazards.

REVISION HISTORY (continued)

Document Number	Issue Date	Action	Description
EP-WCRR-WO-DOP-0233, R.24	February 13, 2011	Minor Revision	Revise procedure to correct references and to provide clarification for the closure of a POC. Provide additional guidance for securing the horsetail during bag-in/bag-out operations. Make editorial corrections as necessary. This revision does not alter the purpose, scope, or intent of the original document. This revision does not introduce any new hazards.
EP-WCRR-WO-DOP-0233, R.25	April 13, 2011	Minor Revision	Revise procedure to incorporate process improvements. Incorporate instructions as to what to do if the parent drum closure ring cannot be reinstalled before lowering the parent drum. Make editorial corrections as necessary. This revision does not alter the purpose, scope, or intent of the original document. This revision does not introduce any new hazards.
EP-WCRR-WO-DOP-0233, R.26	April 18, 2011	Minor Revision	Revise procedure to provide instructions for loosening the nut on the closure ring bolt before lifting the waste drum up to the WCG. Make editorial corrections as necessary. This revision does not alter the purpose, scope, or intent of the original document. This revision does not introduce any new hazards.
EP-WCRR-WO-DOP-0233, R.27	June 9, 2011	Minor Revision	Revise procedure to provide instructions for inspecting drum lift hinge pins and attaching hinge pin retaining clips in Section 6.2; and add note that the retaining clips must be ML-2. Update equipment list to reflect ML-2 retaining clip. Make editorial corrections as necessary. This revision does not alter the purpose, scope, or intent of the original document. This revision does not introduce any new hazards.
EP-WCRR-WO-DOP-0233, R.28	August 10, 2011	Major Revision	This procedure is being revised to allow for bagging a POC onto the WCG, to correct the actions to be taken if a drum is stuck on the WCG drum lift, and to allow for processing waste at greater than 10 rem/hr. This last issue makes the activity a High/Complex Hazard Activity. The HA has been modified to allowed for the procedure to be performed as a Moderate or High/Complex Hazard Activity.
EP-WCRR-WO-DOP-0233, R.29	August 12, 2011	Minor Revision	Revise procedure to correct the high/complex activity hazard classification step in Attachment 1 to "> 10 rem/hr." This revision does not introduce any new hazards.

REVISION HISTORY (continued)

Document Number	Issue Date	Action	Description
EP-WCRR-WO-DOP-0233, Rev 29 IPC-1	August 29, 2011	IPC-1	Revised to change word in step 5.[11] from below to above and a caution and additional language to step 5[12] added ENSURE banding material is not placed around the hoop.
EP-WCRR-WO-DOP-0233, R.30	Training Only	Minor Revision	Revised to update requirements from page change 2.0 and 2.1 associated with STATIONARY Fire Watch in precautions, limitations and associated. Steps of the procedure when inventory is greater than >300 PE Ci. A STATIONARY FIRE WATCH is required in OPERATIONS and WARM STANDBY MODE when the WCG contains INVENTORY > 300 PE-Ci of EQUIVALENT COMBUSTIBLE WASTE. (SAC 5.10.1.7.1) and WCG SHALL be equipped with three 1-litre containers of carbon spheroids or MetL-X when the glovebox INVENTORY is >300 PE-Ci of EQUIVALENT COMBUSTIBLE WASTE (SAC 5.10.1.7.2), and WCG operators SHALL be trained in glovebox fire suppression techniques in order to extinguish small, early developing fires when processing INVENTORY > 300 PE-Ci of EQUIVALENT COMBUSTIBLE WASTE, in coordination with the STATIONARY FIRE WATCH, . This revision has not introduced any additional changes to the JHA.
EP-WCRR-WO-DOP-0233, R.31	Training Only	Minor Revision	Revise procedure to incorporate WCRRF TSR 2.0/2.1 IVR issues. Make editorial corrections as necessary. Revision does not introduce any additional hazards.
EP-WCRR-WO-DOP-0233, R.32	January 31, 2012	Minor Revision	Revise steps referencing 300 PE-Ci to add “equivalent combustible” after PE-Ci. Revision does not introduce any additional hazards.
EP-WCRR-WO-DOP-0233, R.33	April 5, 2012	Minor Revision	Revise procedure to incorporate instructions for the introduction of supplies into the WCG, for leaving a parent drum attached to the WCG overnight, and modify actions for a drum lift deficiency. Make editorial corrections such as correcting step numbering. Revision does not introduce any additional hazards.
EP-WCRR-WO-DOP-0233, R.34	May 24, 2012	Minor Revision	Revise procedure to provide guidance on simulating waste in a drum when obtaining radiation surveys and add the use of the Trolley Rail Clamp. Make editorial corrections such as correcting references. Revision does not introduce any additional hazards.

REVISION HISTORY (continued)

Document Number	Issue Date	Action	Description
EP-WCRR-WO-DOP-0233, R.35	July 2, 2012	Major Revision	Revised to separate verification steps from actual steps in Section 10.1 [10][D] and 10.1[10][E], 10.1[11][C], and reword Step 10.1[11][O] to read If directed by Supervision as a pre condition and Attachment 4 & 5 . Added steps for instructions for Administrative Lock Log, key, and lock Section 10. Added Steps to Section 4.1, 6.2, and 7.1 for using the Trolley Clamp Device. No additional hazards were identified during this revision. Rev bars in left column display locations of changes to the procedure.
EP-WCRR-WO-DOP-0233, R.36	August 1, 2012	Major Revision	Revised procedure to incorporate EP-SO-1708, and add steps to clarify the amount of absorbent needed when processing Nitrate Salts. Also added Appendix 6 Administrative Control Lock Log Sheet. No additional hazards were identified during this revision. Revision bars in the left column display location of changes in the procedure.
EP-WCRR-WO-DOP-0233, R.37	March 20, 2013	Major Revision	Revise procedure to allow flexibility with the processing of Nitrate Salts in order to permit flexibility with the amount of absorbent used. Make editorial corrections as necessary. Delete reference to the initiation of an NCR for issues associated with the waste material. No additional hazards were identified during this revision.
EP-WCRR-WO-DOP-0233, R.38	August 29, 2013	Major Revision	Revise procedure to incorporate steps for the implementation of WCATS at WCRRF. Make editorial corrections as necessary. This revision does not introduce any new hazards.
EP-WCRR-WO-DOP-1198, R.0	January 31, 2014	Major Revision	Revised to incorporate current list of approved Manual Drum Movements per WCRR-SO-13, Manual Drum Movement at WCRRF. Added WCRRF Desktop application to WCATS steps as applicable. Added updates for performing a critical lift in accordance with P101-25 Attachment B Revision 2. New procedure number to align with document control. No additional changes were introduces to the hazardous analysis. No Rev bars major revision
EP-WCRR-WO-DOP-1198, R.0	February 27, 2014	IPC	Revise procedure to correct step 6.1[14][A]. IF there are six randomly distributed broken wires in one rope lay or three broken wires in one strand in one rope lay. No additional hazards were incorporated in this ICP.

TABLE OF CONTENTS

Section Page

TITLE PAGE 1
REVISION HISTORY 2
TABLE OF CONTENTS 8

1. PURPOSE 10

2. SCOPE 10

3. PRECAUTIONS AND LIMITATIONS 11

4. PREREQUISITES ACTIONS 19
4.1 Planning and Coordination 19
4.2 Materials and Equipment 21
4.2.1 Special Tools and Equipment 21
4.2.2 Consumables 21
4.2.3 Measurement and Test Equipment (M&TE) 22
4.3 Field Preparation 22
4.3 Field Preparation (continued) 26

5. PERFORMANCE—PARENT WASTE CONTAINER PREPARATION 32

6. PERFORMANCE—WCG PARENT DRUM LOADING/UNLOADING 36
6.1 WCG Drum Lift Daily Inspection 36
6.2 Parent Drum Loading 40
6.3 Parent Drum Unloading 44

7. PERFORMANCE—WCG PARENT DRUM BAG-ON/BAG-OFF OPERATIONS 47
7.1 Parent Drum Bag On 47
7.2 Parent Drum Bag Off 49

8. PERFORMANCE—WCG DAUGHTER DRUM, BAGPORT, OR GLOVEPORT BAG-ON/BAG-OFF OPERATIONS 54
8.1 Bag On Daughter Drum, Bagport, or Gloveport 54
8.2 Bag Off Daughter Drum 56

9. PERFORMANCE—ITEM BAG-IN/BAG-OUT OPERATIONS 60
9.1 WCG Item Bag-Out 60
9.2 WCG Introductory Port 64

10. PERFORMANCE—WCG WASTE PROCESSING 66
10.1 WCG Waste Processing Preparation 66
10.2 Waste Material Greater Than 190 mrem/hr 77
10.3 Prohibited Item Disposition 81
10.4 Waste Splitting Activities 87
10.5 Repackaging Activities 89
10.6 Processing Nitrate Salt Drums 90

11. POST-PERFORMANCE ACTIVITY 92

TABLE OF CONTENTS (continued)

Section Page
11.1 Disposition 92
11.2 Records Processing 94

12. REFERENCES 95

Appendices
Appendix 1, WCRRF Drum Lift Critical Lift Plan (P101-25, Attachment B) 97
Appendix 2, WCRRF Allowable Container Types For Remediation 107
Appendix 3, Example Preoperational Inspection Record For Overhead Cranes and Hoists 108
Appendix 4, Volumes of Cylindrical Inner Containers Near 4 Liters 109
Appendix 5, Flowchart For Processing of High Dose Items of Mixed Material Types 110
Appendix 6, Administrative Control Lock Log Sheet 111
Appendix 7, Manual Drum Movement Special Instructions 112

Attachments
Attachment 1, WCRRF WCG Waste Processing Data Sheet 113
Attachment 2, WCRRF WCG Drum Lift Inspection Data Sheet 119
Attachment 3, WCRRF WCG Breaching (Opening) Unvented, Sealed Waste Packages Checklist 117
Attachment 4, WCRRF WCG Breaching (Opening) Metal 5- to 30 gal Unvented6 Sealed Waste Package Surveillance 119
Attachment 5, WCRRF Prohibited Item Collection Drum Data Sheet 121

1. PURPOSE

This procedure provides detailed instructions for Waste Characterization Glovebox (WCG) operations at the Waste Characterization, Reduction, and Repacking Facility (WCRRF).

TRU waste that has been identified as not satisfying Waste Isolation Pilot Plant (WIPP) acceptance criteria must be remediated to satisfy the WIPP criteria. Prohibited items must be removed or corrected and the container must also satisfy limits on the amount of radioactive material in each container. Containers that fail to satisfy the WIPP criteria maybe sent to WCRRF to be safely remediated in the WCG.

2. SCOPE

This procedure applies to personnel who perform WCG operations.

The Performance sections of this procedure may be performed independently or in conjunction with other Performance sections.

As used within this procedure a parent waste container is the originating waste container received at WCRRF for processing and a daughter drum is the resulting waste container packaged with the originating waste container waste. There may be multiple daughter drums.

This procedure addresses the following WCG activities:

- Preparation of parent waste containers
- Daughter drum, bagport, and gloveport bag-on/bag-off operations
- Parent drum bag-on/bag-off operations
- Parent drum WCG loading/unloading operations
- WCG waste processing

This procedure addresses the following activities for the complete processing and disposition of waste material within the WCG:

- Visual Examination (VE)
- Prohibited Item Dispositioning (PID)
- Pipe Overpack Component (POC)
- Waste Splitting
- Repackaging

This procedure is performed in conjunction with the Waste Compliance and Tracking System (WCATS), in order to track the WCRRF and Building TA-50-69 radioactive material inventory, populate WCATS with waste container information, to generate Transuranic (TRU)

2. SCOPE (continued)

Waste Storage Records (TWSRs), to generate labels, and to associate new daughter waste containers with the parent waste container.

The performance of this procedure may be classified as a Moderate or High/Complex Hazard activity based on the potential radiation levels encountered during the performance of this activity. To accommodate the two hazard classifications this document requires the identification of the potential radiation levels that may be encountered and documentation of the hazard classification level (moderate or high/complex).

Appendix 7, Manual Drum Movement Special Instructions, is a list of approved methods for manual drum movements developed in accordance with EP-DIV-SO-20057, EWMO Health and Safety Policy-Manual Movement for WCRRF. From the effective date of this procedure, any manual drum movements not listed in Appendix 7 of this procedure **SHALL** undergo the approval process in accordance with EP-DIV-SO-20057. If an interpretation of Appendix 7 is required, the LTP-DDP Operations Manager will provide the final determination as to whether the manual drum movement is captured on Appendix 7 or the manual drum movement instructions are to be developed in accordance with EP-DIV-SO-20057.

3. PRECAUTIONS AND LIMITATIONS

- This procedure contains special procedure step markings. **($)** is used to identify steps that implement WCRRF Safety Basis requirements. Steps containing **($)** may not be changed without Engineering approval to ensure the safety envelope is maintained.

- To comply with the intent of the As Low As Reasonably Achievable (ALARA) Program, all personnel **SHALL** apply the principles of time, distance, and shielding when working with radiological materials.

- Avoid the open area of a shielded container to prevent an increased exposure to radiation which could result from the streaming of radiation while accessing shielded containers during the processing of waste.

- Activities, items, and containers **SHALL** satisfy approved design specifications, regulatory requirements, process-specific parameters, and procedural requirements. Activities, items, or containers that do not conform to the approved specifications and requirements are considered nonconforming and Nonconformance Reports (NCRs) **SHALL** be generated in accordance with P330-6, Nonconformance Reporting, as required.

3. PRECAUTIONS AND LIMITATIONS (continued)

- When a worker observes an unsafe condition or act that may pose an imminent danger or other safety concern/hazard, the worker has the authority and responsibility to inform the worker engaged in the work and request that the work activity be paused and/or stopped based on the risk posed to the individual, the employees, the environment, or the facility in accordance with P101-18, Procedure for Pause/Stop Work.

- Supervision **SHALL** be notified if this procedure cannot be performed as written.

- Not Applicable (N/A) is documented on the attachments during the performance of this procedure indicating information that is not required to be recorded.

- **($)** TRU WASTE CONTAINERS **SHALL** not be stacked and **SHALL** not be lifted higher than 4 ft, excluding the WCG drum lift and lifts during loading or unloading from delivery trucks. (SAC 5.10.2.2)

- Drums **SHALL** not be lifted greater than 4 ft during any operation involved in preparing the drum.

- This procedure **SHALL** not be used to prepare DEGRADED/LOSS OF INTEGRITY drums. DEGRADED/LOSS OF INTEGRITY drums are prepared in accordance with EP-WCRR-WO-DOP-0236, WCRRF Loading/Unloading SWB or 85-Gal Drum.

- **($)** Drums **SHALL** be verified to weigh less than 630 lb before lifting the drums using the WCG drum lift. (SR 4.5.1) Administratively drum weights **SHALL** be limited to 624 lb in order to take into consideration the uncertainties of the instrumentation.

- This procedure is to be performed only by Waste Handling Operators as qualified Glovebox Operators.

- To avoid pinch points, the drum lift pendant operator **SHALL** announce operation of the drum lift before commencing raising/lowering of a drum and that all personnel **SHALL** stand clear and to the side of drum movement.

- **($)** The facility must be in the OPERATION MODE to process waste in the WCG. (TSR 1.2)

3. PRECAUTIONS AND LIMITATIONS (continued)

- The approximate weight of load should be known before moving and the appropriate capacity lift selected. Be aware of uneven loading and shifts in the load when moving.

- Drums can have sharp edges and create pinch points when being moved – use appropriate gloves when handling drums.

- Use proper lifting techniques and buddy system and wear steel toed shoes when performing heavy lifting or movements and comply with the requirements of EP-DIV-Policy-20057, EWMO Health and Safety Policy-Manual Movement.

- **($)** No flammable liquids or gases, and no combustible liquids with NFPA Flammability Rating greater than 1 **SHALL** be stored or used within BUILDING TA-50-69 when INVENTORY is in BUILDING TA-50-69 except three size 1 cylinders of P-10 gas and flammable or combustible liquids found in the TRU WASTE CONTAINER. (LCO 3.4.2)
- Portable high-efficiency particulate air (HEPA) filter ventilation equipment **SHALL** be removed from the WCG Exclusion Area after operations are complete. This limitation supports LCO 3.4.2.

- Due to the unique characteristics of Pu-238, diligent glove surveys should be performed before and after handling Pu-238, as well as periodic glovebox wipe downs.

- All operators involved in the execution of this procedure must be qualified as Waste Handling Operators.

- Fire Patrol or Stationary Fire Watch **SHALL** be established in accordance with the applicable Technical Safety Requirements and identified in EP-DIV-AP-0120, EWMO Watchbill Administration.

- STATIONARY FIRE WATCH **SHALL** be performed in accordance with EP-DIV-AP-0120, EWMO Watchbill Administration.

- **($)** WCG **SHALL** be equipped with three 1-liter containers of carbon spheroids or Met-L-X when the glovebox INVENTORY is > 300 PE-Ci of EQUIVALENT COMBUSTIBLE WASTE. (SAC 5.10.1.7.1)

- An administrative control will ensure that the WCG will be equipped with three 1-liter containers of carbon spheroids or MET-L-X to prevent the potential spread of a fire in the glovebox regardless of the inventory quantity in the WCG.

3. PRECAUTIONS AND LIMITATIONS (continued)

- **($)** A STATIONARY FIRE WATCH **SHALL** be in place when the WCG contains INVENTORY > 300 PE-Ci of EQUIVALENT COMBUSTIBLE WASTE, in order to extinguish small, early developing fires, in coordination with WCG operators. (SAC 5.10.1.7.2)
- When processing a parent drum if an item is encountered to be too large or heavy to handle supervision is to be notified.

- Use caution when performing glovebox operations. Operations may involve handling of sharp objects, applying force to objects with tools, lifting heavy materials or items.
  - The glovebox gloves **SHALL** have cut resistant (e.g., leather, or HexArmor®) gloves over them during glovebox operations when handling sharp objects or opening/closing waste containers.
  - Use the two-man rule when lifting heavy materials or items.
  - Cut or apply force away from hands and arms.
  - Use approved tools and techniques.
  - Tools **SHALL** be in good working order.

- **($)** WCG operators **SHALL** be trained in glovebox fire suppression techniques in order to extinguish small, early developing fires when processing INVENTORY > 300 PE-Ci of EQUIVALENT COMBUSTIBLE WASTE, in coordination with the STATIONARY FIRE WATCH. (SAC 5.10.1.7.3)

- Unvented, sealed waste packages are those waste packages that have a positive locking mechanism, such as a gasket with drum closure ring or a screw top lid (with no other openings) to seal the lid to the waste package.

- **($)** When breaching (opening) unvented, sealed waste packages in the WCG the following requirements **SHALL** be satisfied:
  - Non-sparking tools and processes **SHALL** be used, (SAC 5.10.1.6.1)
  - Electrical receptacles within the WCG **SHALL** be de-energized before opening the waste package and remain de-energized for a minimum of 30 minutes after removing the lid and lid restraining device. (SAC 5.10.1.6.2) and (SAC 5.10.1.6.3)

- **($)** Before breaching (opening)an unvented, sealed 5- to 30-gal waste packages in the WCG a lid restraining device **SHALL** be inspected for degradation and properly installed (SAC 5.10.1.5.1), and WCG operations **SHALL** be ceased for a minimum of 30 minutes following the removal of the waste package lid and lid restraining device (breaching). (SAC 5.10.1.5.2)

3. PRECAUTIONS AND LIMITATIONS (continued)

- **($)** When processing a positively sealed 30- to 5-gallon metal WASTE PACKAGE in the WCG, the parent 55-gallon drum bagged-on to the WCG and metal WASTE PACKAGE **SHALL** be grounded when the metal WASTE PACKAGE is breached and for 30 minutes after the removal of the lid and lid restraining device. (LCO 3.6)

- Personnel **SHALL** be aware of heat and cold stress indicators and observe co-workers in accordance with the Thermal Stress Awareness Course.

- Personnel protective equipment (PPE) **SHALL** be worn (e.g., safety shoes, cut resistance gloves, and respirator) as required by Industrial Hygiene/Health and Safety and in accordance with the Radiological Work Permit (RWP).

- Sharp objects **SHALL** be covered and properly stored when not in use. Wear cut/puncture resistant glove (e.g., leather) and cut away from your body when in use.

- All sharp objects that are introduced inside the glovebox **SHALL** be properly identified and stored when not in use in accordance with EP-DIV-AP-20047, LTP Glovebox/Glovebag and Glove Safety Program.

- Routine inspection of glovebox gloves **SHALL** be conducted in accordance with EP-DIV-AP-20047 and this procedure.

- To prevent personnel injury due to ergonomic, pinch point, and other general hazards, personnel **SHALL** maintain an awareness of the working environment and task activities and use good work practices and techniques, skill of craft, good ergonomic practices, and minimize time in awkward/uncomfortable positions.

- Spark-producing and non-sparking tools **SHALL** be distinguished from each other. Spark-producing tools are to be set aside in the WCG, and not handled, when non-sparking tools are required.

- A cordless drill may be used to open a parent drum. This will minimize overextending glovebox gloves and potential damage (i.e., tearing a glove) when using a ratchet. The cordless drill is considered to be a spark-producing tool and is to be placed aside in the WCG, and not handled, when non-sparking tools are required.

- Charging of portable electric equipment in the WCG **SHALL** not be performed when there is INVENTORY in the WCG.

3. PRECAUTIONS AND LIMITATIONS (continued)

- Charging of battery operated equipment external to the WCG **SHALL** not be charged within the WCG exclusion zone.

- If receptacle inside the WCG or in the WCG exclusion zone is used, the equipment being plugged in must be in the OFF position before inserting or removing the plug at the receptacle.

- Prohibited items are documented by two distinct processes. One is through the use of the fast scan process, indicated by the GREEN hold tag. The second is through the use of CCP's NCR, indicated by a RED hold tag.

- Waste placed into daughter drums or Pipe Overpack Containers (POCs) must be from a single parent drum.

- Based on waste acceptance criteria, Class 1 oxidizers such as nitrates, and reactive flammables such as lithium metal or hydrides are prohibited items in the WCRRF.

- Liquids removed from a parent drum must be remediated (absorbed) inside of a new container.

- Storage of drum lid restraints when not in use **SHALL** be such that the drum lid restraints are protected from degradation (e.g., daughter drum).

- Avoid slips, trips, and falls by wearing the proper footwear with slip-resistant soles and using handrails when using stairs. Use established pathways when available and avoid walking on uneven or unstable surfaces.

- Glass sample vials may contain residual granular plutonium hydride which can generate sparks when subjected to mechanical agitation. To reduce the possibility of breaking a glass sample vial and the generation of sparks, glass sample vials **SHALL** be handled with care and void volume reduction activities **SHALL** be performed without excessive force. (EP-DIV-REPORT-09)

- The fire protection system sprinkler head located in the WCG is a water source that if activated (inadvertently or as a result of an actual WCG fire) would result in the spread of radiological contamination. Contact with the sprinkler head during waste processing is to be avoided in order to reduce the possibility of the inadvertent initiation of water flow into the WCG.

3. PRECAUTIONS AND LIMITATIONS (continued)

- **($)** No combustibles **SHALL** be stored within the waste characterization glovebox (WCG) exclusion zone. The WCG exclusion zone is 10 ft around the WCG, up to GBE, or up to the walls of Room 102, whichever is less. (LCO 3.4)

  The following are excluded from the above limitations of LCO 3.4
  - INVENTORY that is in the WCG or staged in BUILDING TA-50-69.
  - Combustible components of support equipment (e.g., wiring insulation, operator platforms and rubber mats) within the WCG Exclusion Zone and associated with WCG processing.
  - Drum liners or wrapping around DEGRADED/LOSS OF INTEGRITY drums that are inside BUILDING TA-50-69 being loaded and working amounts of material necessary to complete bag on/off operations such as tape, cheese cloth, and extra operator gloves.
  - Hydraulic fluid within the engineered, closed-loop, containment systems.
  - Combustible components associated with a forklift.

- The Class 2 laser scanning head on the WCATS mobile device can cause eye injury if eye is exposed to the beam. Do <u>not</u> allow eyes of user or observers to become exposed to laser beam.

- The WCATS mobile device contains lithium-ion battery. The operating temperature recommendation for the Workabout Pro 3 (WCATS mobile device) is from -4 degrees F to 122 degrees F. Do <u>not</u> store the WCATS mobile device where temperatures are less than -40 °F or greater than 140 °F. Exposure to extreme temperatures (greater than 140 °F) may cause battery to explode. Keep mobile device out of direct sunlight for extended periods of time when not in use. Do not incinerate, mutilate, short circuit, or disassemble the battery pack. Do not dispose of in municipal waste receptacles. Dispose of in properly marked universal waste disposal areas.

- All manual physical movements of 55-gal and larger drums, whether empty or containing waste, **SHALL** be performed as a last resort and with written approval in accordance with EP-DIV-SO-20057, EWMO Health and Safety Policy-Manual Movement

- All approvals for manual physical movements in accordance with EP-DIV-SO-20057, EWMO Health and Safety Policy-Manual Movement and Appendix 7, Manual Drum Movement Special Instructions.

3. PRECAUTIONS AND LIMITATIONS (continued)

- All critical lift plans executed by LANL personnel **SHALL** be developed using Attachment B, LANL Critical Lift Plan, of P101-25, Cranes, Hoists, Lifting Devices, and Rigging Equipment.

- The instructions in this procedure satisfy the P101-25 ordinary lift requirements and the use of LANL Form 1611, Ordinary Lift Procedure, is not required. Not all of the items listed on Form 1611 are captured in this procedure because this procedure is performed using gantry cranes and forklifts in preapproved locations and lifts standard waste containers of a known size and volume.

- Forklift operations are governed by the LANL procedure P101-4, Forklift and Powered Industrial Trucks. P101-4 requires the completion of the applicable sections of a LANL procedure P101-25 Attachment B for critical lifts involving a forklift or powered industrial truck. Forklift operations not involving a critical lift (e.g., load suspended below the forks of the forklift) are not required to comply with the requirements of P101-25.

- Support Services Subcontractors executing this procedure SHALL comply with the safety and health requirements documented in contractual agreements with the LANL.

4. PREREQUISITES ACTIONS

NOTE *The listed prerequisite actions may be completed in any order.*

4.1 Planning and Coordination

Supervisor or designee

[1] **ENSURE** that this procedure is the latest revision, and **IDENTIFY** this document as Working Copy or Information Only on the Title Page.

[2] **ENSURE** that the performance of this procedure has been scheduled on the WCRRF schedule.

[3] **ENSURE** that an RWP for the planned activity has been issued.

[4] **ENSURE** that a pre-job briefing is conducted for all personnel involved in the performance of this procedure, in accordance with EP-DIV-AP-0112, EWMO Pre-Job Briefings, and that the pre-job briefing included weather conditions, communication requirements, hazards/controls and emergency response actions.

[5] **ENSURE** that, as a minimum, the following personnel trained in the use of this procedure are available for performance of this procedure, as required:

- Two Radiological Control Technician (RCT)
- Four Waste Handling Technician
- One Supervisor (e.g., Shift Operations Supervisor or Person-In-Charge)
- One Central Characterization Project (CCP) representative [Visual Examination (VE) only]
- **($)** STATIONARY FIRE WATCH (greater than 300 PE-Ci equivalent combustible waste only) (SAC 5.10.1.7.2)

4.1 Planning and Coordination (continued)

[6] **IF** performing Section 10, WCG Waste Processing,
THEN:

[A] **ENSURE** that the waste containers to be processed have been evaluated in accordance with EP-DIV-AP-20098, LTP TRU Waste Remediation Safety Evaluation, and that a copy of the LTP Waste Remediation Safety Evaluation Data Sheet (EP-DIV-AP-20098 Attachment 1) has been obtained for each waste container to be processed.

[B] **INITIATE** a copy of Attachment 1, WCRRF WCG Waste Processing Data Sheet for each waste container to be processed, and **DOCUMENT** the following information:

- Parent Waste Container Number (record on each page of Attachment 1)
- Prohibited Items, if present
- Parent waste container RCRA Designations

[C] **ATTACH** a copy of the LTP Waste Remediation Safety Evaluation Data Sheet (EP-DIV-AP-20098 Attachment 1) to Attachment 1.

[7] **OBTAIN** a blank Administrative Control Lock Log Sheet form 10.4 of EP-DIV-AP-0117, lock, and key from the WCRRF Operations Center. (e.g., See Appendix 6, Administrative Control Lock Log Sheet)

[8] **ENSURE** that the TRU daughter waste container labels (e.g., Shorty barcode labels) have been obtained from the Waste Help Team (wastehelp@lanl.gov).

4.2 Materials and Equipment

4.2.1 Special Tools and Equipment

NOTE *The list of special tools and equipment is not an all inclusive list and additional tools and equipment may be used as necessary.*

Waste Handling Technician or Supervision

[1] **ENSURE** that the following special tools and equipment are available, as required:

- Safety glasses with side shields
- Permanent marker
- Cut resistant (e.g., HexArmor™, leather, or leather palm mechanics) gloves
- Drum dolly
- Two-wheel dolly
- Portable HEPA-filter exhaust system
- Cutting tool (e.g., utility knife or PVC cutter)
- WCG metal bucket
- Tools for separating and processing waste
- Non-sparking tools for separating and processing waste
- Banding tool
- ML-2 drum lift hinge pin retaining clips (e.g., E-clips)
- Removable lead glass windows
- Lead blankets
- WCATS mobile device

4.2.2 Consumables

NOTE *The list of consumables is not an all inclusive list and additional consumables may be used as necessary.*

Waste Handling Technician or Supervision

[1] **ENSURE** that the following consumables are available, as required:

- Bag-off bags (filtered or unfiltered)
- Tape (duct or vinyl)
- Binding ties
- Nitrile gloves
- Plastic waste bags
- Drum labels
- Chemwipes or equivalent
- Wire rope inspection cloth (e.g., cheese cloth)

4.2.2 Consumables (continued)

- Fantastik or equivalent
- Banding material
- Banding buckles
- Kitty Litter/Zeolite® absorbent
- 3 Liters Carbon Spheroids or MET-L-X
- Litmus paper
- Lead or lead equivalent WCG gloves
- Velcro®

4.2.3 Measurement and Test Equipment (M&TE)

Waste Handling Technician or Supervision

[1] **ENSURE** that the following measuring and test equipment are available, as required:
- Platform scale
- WCG scale

4.3 Field Preparation

Waste Handling Technician or Supervision

[1] **($) IF** performing any section except Section 8.1, Bag On Daughter Drum, Bagport, or Gloveport, without bagging in waste material,
THEN ENSURE that Building TA-50-69 is in the OPERATION MODE in accordance with EP-WCRR-FO-DOP-0201, WCRRF and Building TA-50-69 TSR Mode Change, and **CHECK** (√) OPERATIONS on Attachment 1, WCRRF WCG Waste Processing Data Sheet. (TSR 1.2)

[2] **($) IF** performing Section 8.1,
AND waste material is **NOT** being introduced into the WCG,
THEN ENSURE that Building TA-50-69 is in the OPERATION or WARM STANDBY MODE in accordance with EP-WCRR-FO-DOP-0201, and **CHECK** (√) OPERATION or WARM STANDBY on Attachment 1. (TSR 1.2)

[3] **ENSURE** that the WCRRF Operations Center has authorized the performance of this procedure.

4.3 Field Preparation (continued)

[4] **IF** performing one of the following sections:
Section 5, Parent Waste Container Preparation,
Section 6, WCG Parent Drum Loading/Unloading,
Section 10, WCG Waste Processing,
THEN:

[A] **ENSURE** that the weekly Platform Scale calibration verification has been performed in accordance with EP-WCRR-WO-DOP-0239, Verifying WCRRF Scales.

[B] **RECORD** the platform scale serial number and calibration due date on Attachment 1.

[C] **IF** the platform scale exceeds the calibration due date,
THEN NOTIFY the WCRRF Operations Center of the discrepancy, and
REQUEST the applicable actions.

[5] **IF** performing Section 10,
THEN:

[A] **ENSURE** that preprinted Item ID Number labels and PCB Item Number labels are obtained from the Waste Management Coordinator.

[B] **($) ENSURE** that WCG contains three 1-Liter containers of carbon spheroids or MET-L-X, and **DOCUMENT** (initials and date) on Attachment 1.
(SAC 5.10.1.7.1)

[C] **ENSURE** that the required number of daughter drums have been prepared in accordance with EP-WCRR-WO-DOP-0221, Preparing and Closing 55-gal Daughter Drum Assemblies.

[D] **REVIEW** Appendix 2, WCRRF Allowable Container Types For Remediation.

[E] **ENSURE** that Prohibited Item Collection Containers (aerosol and pressurized cylinders) <u>or</u> previously initiated Prohibited Item Collection Containers are available, as necessary, and that the Prohibited Item Collection Containers (Holdup Container) have been generated in WCATS and have been labeled.

4.3 Field Preparation (continued)

NOTE *The daughter waste containers (e.g., 55-gal drums) may be prepared in advance of the waste container remediation activity and at a location other than the processing area. As such, the lids may be temporarily placed on the daughter waste containers to allow them to be safely transported to the processing area.*

[F] **ENSURE** that a sufficient number of daughter waste containers (e.g., 55-gal drums) are available, as necessary.

[6] **($) IF** performing Section 10,
AND the parent container TRU-waste material inventory value is greater than 300 PE-Ci equivalent combustible waste,
THEN ENSURE a STATIONARY FIRE WATCH has been established, and
DOCUMENT (Initial and Date) on Attachment 1. (SAC 5.10.1.7.2)

NOTE *The Technical Safety Requirements for WCRRF specify that a critical lift plan is required for lifts and forklift movements involving DEGRADED or LOSS OF INTEGRITY drums. Additionally a critical lift plan is required in accordance with the requirements of P101-25, Cranes, Hoists, Lifting Devices, and Rigging Equipment, such as when the weight of the parent drum is greater than 75% of the WCG drum lift rated capacity (624 lb x .75 = 468 lb).*

[7] **IF** performing Section 6,
THEN:

[A] **DETERMINE** whether the parent drum is a degraded or loss of integrity drum, or whether the parent drum weight is greater than 468 lb but less than or equal to 624 lb, and **CHECK** (√) YES or NO on Attachment 1.

4.3 Field Preparation (continued)

NOTE 1 *The Person-in-Charge (PIC) appointed for the safe handling of critical loads and for the safe handling of non-critical items in, around, or above spaces in which critical items are located* ***SHALL*** *be trained as a qualified crane operator and rigger.*

NOTE 2 *WCRRF drum lift operations is a pre-engineered lift in accordance with P101-25 and require a Critical Lift Plan when the lift satisfies the critical lift criteria of P101-25. Critical lifts executed by LANL personnel* ***SHALL*** *be performed and documented in accordance with Appendix 1, WCRRF Drum Lift Critical Lift Plan (P101-25, Attachment B). Subcontract personnel* ***SHALL*** *comply with the safety and health requirements documented in contractual agreements with LANL and may use the information provided in Appendix 1.*

NOTE 3 *The WCG Drum Lift is a pre-engineered and an approved critical lift. Some items in Appendix 1,* are already pre-populated, therefore the PIC will be required to complete the remaining items and sections left blank.

[B] **($) IF** the parent drum is a degraded or loss of integrity drum, (AC 5.10.3.1) **OR** the parent drum weight is greater than 468 lb but less than or equal to 624 lb, **THEN GENERATE** a critical lift plan.

4.3 Field Preparation (continued)

WARNING

1. **Performance of a pre-operational inspection of the WCG drum lift (Form 1489), SHALL ensure that the entire length of the drum lift cable is inspected. This will require that the drum lift be exercised from the full up to the full down positions.**

2. **The drum lift pendant operator is to announce operation of the lift before raising or lowering the drum and all personnel are to stand clear and to the side of drum movement in order to prevent personnel injuries.**

NOTE *The inspection criteria identified as N/A on Appendix 3, Example Preoperational Inspection record for Overhead Cranes and Hoists, are not required to be performed.*

[C] **IF** performing Section 6 for the first time for the day,
THEN PERFORM a pre-operational inspection of the WCG drum lift components in accordance with P101-25 by completing the applicable sections of Form 1489.

[8] **IF** performing WCG operations (e.g., Section 10, WCG Waste Processing),
THEN:

[A] **DETERMINE** whether the WCG glove change due date marked on each WCG gloves has been exceeded.

[B] **IF** the WCG glove change due date marked on the WCG glove has been exceeded,
OR a WCG glove or bag-in/bag-out bag fails the inspection,
THEN:

[a] **STOP** operations.

[b] **IDENTIFY** the WCG glove or bag-in/bag-out bag as out-of-service.

[c] **NOTIFY** supervision and an RCT for the applicable actions in accordance with EP-DIV-AP-20047.

4.3 Field Preparation (continued)

NOTE *WCG gloves with a glove change due date that has been exceeded are not required to be inspected in accordance with the following step.*

[C] **INSPECT** the internal and external surfaces of each WCG glove and bag-in/bag-out bag for the following:

- Layer separations
- Cuts
- Natural degradation
- Cracks
- Stiffness
- Punctures
- Splits
- Obvious physical signs of deterioration
- Discoloration
- Surface deposits/debris
- Radiological contamination (internal only)
- Exposed color of the lead liner, if present

[D] **CHECK** (√) SAT or UNSAT on Attachment 1, and **DOCUMENT** the completion of the WCG glove inspection by signing and dating on Attachment 1.

[9] **ENSURE** that glovebox inspections have been completed in accordance with EP-DIV-AP-20047.

[10] **IF** Section 10.4, Waste Splitting Activities, is to be performed,
THEN ENSURE that Low-Level Waste Characterization personnel are available, as necessary.

[11] **IF** this procedure is being performed as a High/Complex Hazard activity as determined in Section 4.1, Planning and Coordination,
THEN:

[A] **ENSURE** that the temporary lead glass windows have been attached (e.g., Velcro®) to the inside of the applicable WCG windows.

[B] **ENSURE** that lead or lead equivalent gloves have been installed on the WCG gloveports.

4.3 Field Preparation (continued)

[C] **ENSURE** that lead blankets have been placed along the bottom of the WCG.

NOTE 1 *The following step may be performed out of sequence and may be performed in Building TA-50-37 (Artic).*

NOTE 2 *The TRU DRUM PREPARATION task on the WCATS mobile device or desktop application may be performed in conjunction with the performance of the physical build of a POC.*

[12] **IF** a POC is to be used,
AND the POC is to be bagged onto the WCG,
THEN:

[A] **OBTAIN** a POC bag-on bag.

[B] **APPLY** vinyl tape to the POC bag-on bag, with a smear pad centered on the tape, over the filter.

[C] **INFLATE** the POC bag-on bag with air from a compressed air source.

[D] **INSPECT** the POC bag-on bag for damage, cuts, or leaks by looking, listening, and feeling.

[E] **STRETCH** the POC bag-on bag's bungee cord, and **INSPECT** the bungee cord for cuts or damage.

[F] **IF** the POC bag-on bag or bungee cord fails the inspection,
THEN:

[a] **IDENTIFY** (e.g., tag or mark) the failed item indicating that item is defective.

[b] **SEGREGATE** the failed item in order to prevent the item from being used.

4.3 Field Preparation (continued)

NOTE 1 *A Quality Assurance (QA) representative may be contacted for assistance with the NCR process.*

NOTE 2 *The NCR may be initiated at an operationally convenient time.*

[c] **ENSURE** that an NCR is initiated in accordance with P330-6, Nonconformance Reporting, as required.

[d] **REPLACE** the defective item.

[e] **GO** to Step 4.3[12][A].

NOTE *The following step may be performed out of sequence to allow for the bulk inspection of liners in order to improve operational efficiencies.*

[G] **OBTAIN** and **VISUALLY INSPECT** a POC plastic/cardboard liner ensuring the exterior surfaces are smooth.

[H] **IF** POC plastic/cardboard liner fails the inspection,
THEN:

[a] **IDENTIFY** (e.g., tag or mark) the POC plastic/cardboard liner indicating that the POC plastic/cardboard liner is defective.

[b] **SEGREGATE** the POC plastic/cardboard liner in order to prevent the item from being used.

NOTE 1 *A Quality Assurance (QA) representative may be contacted for assistance with the NCR process.*

NOTE 2 *The NCR may be initiated at an operationally convenient time.*

[c] **ENSURE** that an NCR is initiated in accordance with P330-6, Nonconformance Reporting, as required.

[d] **REPLACE** the POC plastic/cardboard liner.

[e] **GO** to Step 4.3[12][G].

4.3 Field Preparation (continued)

[I] **PLACE** the POC plastic/cardboard liner into the POC bag-on bag.

[J] **PLACE** the POC plastic/cardboard liner and bag into the POC pipe component.

[K] **ENSURE** that excess POC bag-on bag is placed inside of the POC pipe component.

4.3 Field Preparation (continued)

[L] **PLACE** the POC pipe component lid on the POC pipe component and **TIGHTEN** the lid sufficiently to hold the lid on the POC pipe component.

[M] **PLACE** the POC drum lid on the POC drum and **TIGHTEN** the closure ring bolt sufficiently to hold the drum lid in place.

[13] **ENSURE** that the new daughter waste containers (e.g., POCs and 55-gal drums) have been created in WCATS desktop application using the TRU DRUM PREPARATION application and that the Shorty barcode labels have been applied to the new daughter waste containers (e.g., POCs and 55-gal drums) in accordance with EP-DIV-DOP-20043, LTP TRU Waste Container Labeling.

5. PERFORMANCE—PARENT WASTE CONTAINER PREPARATION

This section is a stand-alone section and may be performed independently of or in conjunction with other Performance sections.

NOTE 1 *Radiological surveys may be performed as determined necessary [e.g., by an RP representative (e.g., RCT)] anytime during the performance of this procedure.*

NOTE 2 *All manual drum movement will be performed in accordance with Appendix 7, Manual Drum Movements Special Instructions and EP-DIV-Policy-20057, EWMO Health and Safety Policy-Manual Movement.*

Waste Handling Technician

[1] **ENSURE** that the prerequisite actions have been completed.

NOTE *Steps 5.[2] through 5.[4] may be performed in Building TA-50-37 (Artic).*

[2] **OBTAIN** an unfiltered bag-off bag or a filtered bag-off bag, and **TAPE OVER** the inside and outside filter openings of a filtered bag-off bag, as applicable.

CAUTION

Care should be exercised when not to over inflate the filtered bag. Apply only enough air to inspect for leaks. (pins holes, leakage around filter attachment points.). Failure to comply with this caution could lead to overstressing the filter and possible pre-damage to the filtered bag.

[3] **INFLATE** the filtered or no filtered bagout bag carefully and slowly while sealing the bag (i.e. securing opening with hand).

[4] **INSPECT** the bag-off bag for damage or cuts examining by sight, sound, and feel.

[5] **IF** the bag-off bag does **NOT** hold the air,
THEN:

[A] **IDENTIFY** (e.g., tag or mark) the bag-off bag indicating that the bag-off bag is defective.

[B] **SEGREGATE** the bag-off bag in order to prevent the item from being used.

5. PERFORMANCE—PARENT WASTE CONTAINER PREPARATION (continued)

NOTE *The NCR may be initiated at a time that is operationally convenient.*

[C] **ENSURE** that an NCR is initiated in accordance with P330-6, Nonconformance Reporting.

[D] **GO** to Step 5.[2].

[6] **TAPE** the drum closure ring bolt in order to prevent tearing or cutting the unfiltered bag-on bag.

[7] **IF** the drum to be processed is **NOT** a degraded or loss of integrity drum, **THEN CUT** off the bottom of a bag-off bag approximately 27 to 30 inches from the bottom of the bag-off bag in order to create a bag-off sleeve.

[8] **SLIDE** the bag-off bag over the top of the drum down to between the second and third rolling hoops (from the top) ensuring that the first and second rolling hoops (from the top) are covered.

NOTE *Enough room must be left between the tape and the drum closure ring bolt in order for the drum closure ring to be removed without damaging the bag-on bag.*

[9] **WRAP** tape (vinyl or duct) around the container so that the bag-off bag is tightly bound approximately halfway between the second and third rolling hoops near the top of the drum and overlapping the bag-off bag onto the drum.

[10] **ENSURE** that the drum wrapping (e.g., tape and bag-off bag) is airtight and no air pockets are present.

WARNING

Placement of duct tape below top rolling hoop may vary to ensure the surface area selected is free of abnormalties (e.g., dents, scrapes). Failure to comply with this could lead to an improper seal and potential unwanted radiological contamintation.

[11] **IF** the abnormalities (e.g., dents, scrapes) are discovered above the top rolling hoop, **THEN WRAP** duct tape around the drum just below the top rolling hoop on a surface that does not container abnormalities (e.g. dents, scrapes.

5. PERFORMANCE—PARENT WASTE CONTAINER PREPARATION (continued)

[12] **WRAP** duct tape around the drum just above the top rolling hoop on a surface that does not contain abnormalities (e.g., dents, scrapes).

CAUTION

Improper placement of the banding material over the drum hoop may result in movement and banding material slipping down the drum. Do not place banding material over drum hoop.

[13] **PLACE** banding material around the drum over the installed duct tape and **ENSURE** banding material is not placed over the drum hoop.

[14] **TIGHTEN** and **BUCKLE** the banding material with a banding tool.

[15] **COVER** the banding buckle with duct tape to prevent bag tears.

[16] **ROLL DOWN** the remaining bag-off bag around drum.

NOTE *The following two steps may be performed just before loading the drum on the WCG drum lift.*

[17] **IF** items (e.g., gloves or tools) are to be bagged into the WCG with the Prepared Parent Drum,
THEN SECURE the items to the top of the Prepared Parent Drum.

[18] **WEIGH** the Prepared Parent Drum with items secured to the drum top, as applicable, and **RECORD** the Prepared Parent Drum Weight on Attachment 1.

[19] **IF** the Prepared Parent Drum Weight is greater than or equal to 624 lb,
THEN:

[A] **STOP** the work activity.

NOTE *The WCRRF Operations Center notifies the Transuranic (TRU) Waste Disposition Project (WDP) Operations Manager (OM) or designee and the Shift Operations Supervisor (SOS) of the discrepancy.*

[B] **NOTIFY** the WCRRF Operations Center of the discrepancy.

5. PERFORMANCE—PARENT WASTE CONTAINER PREPARATION (continued)

[C] **REQUEST** the applicable actions from the SOS or designee.

[20] **RECORD** the following information on the parent drum lid using a permanent marker:

- Parent drum number
- Parent drum weight
- Date
- Platform scale serial number
- Platform scale calibration due date

6. PERFORMANCE—WCG PARENT DRUM LOADING/UNLOADING

NOTE 1 *Radiological surveys may be performed as determined necessary [e.g., by an RP representative (e.g., RCT)] anytime during the performance of this procedure.*

NOTE 2 *All manual drum movement will be performed in accordance with Appendix 7, Manual Drum Movements Special Instructions and EP-DIV-Policy-20057, EWMO Health and Safety Policy-Manual Movement.*

6.1 WCG Drum Lift Daily Inspection

This sub-section is a stand-alone sub-section and may be performed independently of or in conjunction with other sub-sections.

This inspection is to be performed once each work day before the WCG drum lift is to be used to hoist a waste drum.

NOTE *The individual performing the WCG drum lift inspection **SHALL** be at a minimum a certified Qualified Crane Operator.*

Waste Handling Technician

[1] **OBTAIN** and **REVIEW** the previously completed copy of Attachment 2, WCRRF WCG Drum Lift Inspection Data Sheet.

[2] **OBTAIN** a new copy of attachment 2, and **RECORD** the inspection date on Attachment 2.

[3] **RECORD** any previously identified wire rope damage in Table 3-1 or Table 3-2, or N/A as applicable, on Attachment 2, and **CHECK** (√) applicable box in the Previously Identified Damage column in Table 3-1 or Table 3-2, as applicable, on Attachment 2.

[4] **RECORD** the number of threads exposed out the end of the shaft bolt locknut on the upper, middle, and lower pulley shaft bolts from the previous inspection on Attachment 2.

6.1 WCG Drum Lift Daily Inspection (continued)

[5] **DETERMINE** and **RECORD** on Attachment 2 the current number of threads exposed out the end of the shaft bolt locknut on the upper, middle, and lower pulley shaft bolts (see illustration below).

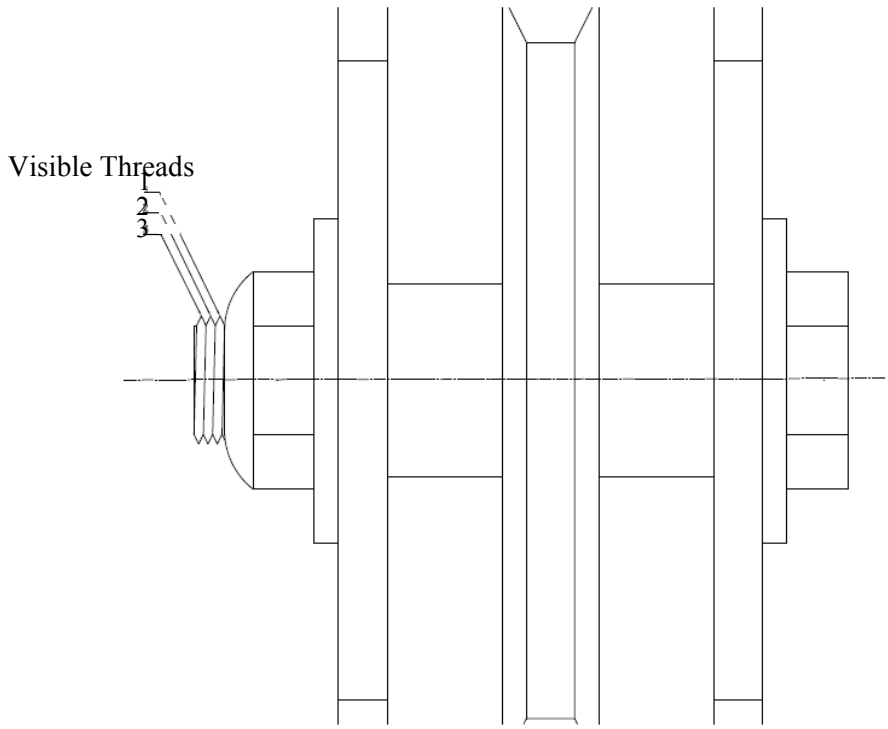

[6] **DETERMINE** whether the shaft bolt end is flush with or extends out of the outer end of the shaft bolt locknut, and **CHECK** (√) YES or NO on Attachment 2.

[7] **INSPECT** the upper, middle, and lower pulley shaft bolts for any signs of wear between the shaft bolt and the support flanges (e.g., shaft not perpendicular to the flange plate), and **CHECK** (√) SAT or UNSAT for each shaft bolt on Attachment 2.

WARNING

The drum lift pendant operator is to announce operation of the lift before raising or lowering the drum and all personnel are to stand clear and to the side of drum movement in order to prevent personnel injuries.

[8] **ENSURE** that the drum trolley is in the full-down position.

6.1 WCG Drum Lift Daily Inspection (continued)

WARNING

Cut resistant (e.g., leather or leather palm mechanics) gloves are to be worn while inspecting the drum trolley wire rope and the cloth is to be held loosely in order to prevent skin punctures resulting from broken wires of the wire rope.

[9] **INSPECT** the entire length of the exposed, upper wire rope from the top of the drum trolley to the wire rope hoist drum by loosely gripping the cloth (e.g., cheese cloth) while sliding the cloth along the length of the wire rope, and **CHECK** (√) YES or NO to indicate whether any new damage is identified on Attachment 2 to indicate whether any upper wire rope damage is discovered.

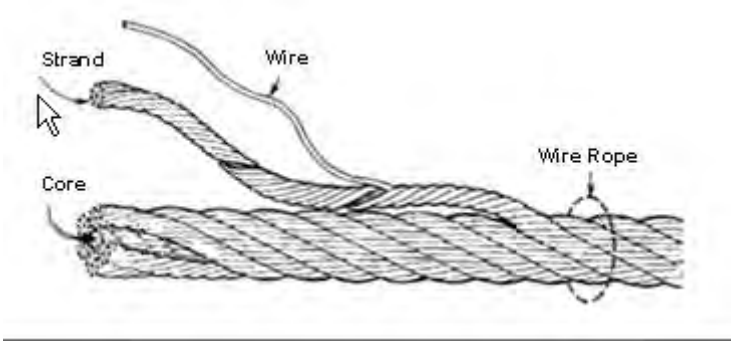

[10] **IF** the cloth snags on the wire rope,
THEN VISUALLY INSPECT the wire rope snag location for damage, and
DOCUMENT the results of the inspection including the location of the damage in Table 3-1, Upper Wire Rope Damage, on Attachment 2.

WARNING

The drum lift pendant operator is to announce operation of the lift before raising or lowering the lift and all personnel are to stand clear and to the side of drum movement in order to prevent personnel injuries.

[11] **ENSURE** that the drum trolley is in the full-up position.

6.1 WCG Drum Lift Daily Inspection (continued)

WARNING

Cut resistant (e.g., leather or leather palm mechanics) gloves are to be worn while inspecting the drum trolley wire rope and the cloth is to be held loosely in order to prevent skin punctures resulting from broken wires of the wire rope.

[12] **INSPECT** the entire length of the exposed, lower wire rope from the top of the drum trolley to the wire rope hoist by loosely gripping the cloth (e.g., cheese cloth) while sliding the cloth along the length of the wire rope, and **CHECK** (√) YES or NO to indicate whether any new damage is identified on Attachment 2 to indicate whether any lower wire rope damage is discovered.

[13] **IF** the cloth snags on the wire rope,
THEN VISUALLY INSPECT the wire rope snag location for damage, and **DOCUMENT** the results of the inspection including the location of the damage in Table 3-2, Lower Wire Rope Damage, on Attachment 2.

IPC-1 [14] IF there are six randomly distributed broken wires in one rope lay or three broken wires in one strand in one rope lay,
THEN:

[A] **CHECK** (√) UNSAT for the wire rope inspection on Attachment 2.

[B] **GO** to Step 6.1[16].

[15] **CHECK** (√) SAT for the wire rope inspection on Attachment 2.

[16] **IF** UNSAT was checked (√) for any of the WCG inspections,
THEN:

[A] **STOP** the work activity.

[B] **RECORD** Printed name, signature, Z# and **DATE** on Attachment 2.

NOTE *The WCRRF Operations Center notifies the WDP SOM or designee and the Cognizant System Engineer (CSE) of the discrepancy.*

[C] **NOTIFY** the WCRRF Operations Center of the discrepancy.

[D] **DOCUMENT** the notifications and discrepancies in the Comments section of Attachment 2.

6.2 Parent Drum Loading

This sub-section is a stand-alone sub-section and may be performed independently of or in conjunction with other sub-sections.

Waste Handling Technician

[1] **ENSURE** that the prerequisite actions have been completed.

RCT

[2] **PERFORM** radiological surveys as necessary during the waste container handling evolutions.

Waste Handling Technician

[3] **IF** radiological contamination is detected,
THEN FOLLOW the instructions of the RCT and RWP.

[4] **RECORD** the Processing Date (current date) on Attachment 1, WCRRF WCG Waste Processing Data Sheet.

[5] **IF** lead blankets are to be used as radiological shielding on the parent drum,
THEN:

[A] **WEIGH** the lead blankets, as necessary, and **RECORD** the lead blanket's weight on Attachment 1.

[B] **SUM** the Lead Blanket Weights and the Prepared Parent Drum Weight, and **RECORD** the Total Prepared Parent Drum Weight (drum and lead blankets) on Attachment 1.

[C] **GO** to Step 6.2[7].

[6] **RECORD** the Total Prepared Parent Drum Weight (parent drum weight) on Attachment 1.

[7] **($) DETERMINE** whether the Total Parent Drum Weight is less than 624 lb, and **CHECK** (√) SAT or UNSAT for the Total Parent Drum weighing less than 624 lb on Attachment 1. (SR 4.5.1)

6.2 Parent Drum Loading (continued)

[8] **IF** the Total Parent Drum Weight is greater than or equal to 624 lb,
THEN:

[A] **STOP** the work activity.

NOTE *The WCRRF Operations Center notifies the TRU WDP OM or designee and the SOS of the drum status.*

[B] **NOTIFY** the WCRRF Operations Center, of the drum status.

[C] **REQUEST** the applicable actions from the SOS or designee.

NOTE *P101-25 provide instructions for a conducting a critical lift.*

[9] **($) IF** the prepared parent drum is a degraded or loss of integrity drum, (AC 5.10.3.1)
OR the parent drum weight is greater than 468 lb,
THEN ENSURE that the prepared parent drum is loaded in compliance with P101-25 Attachment B Critical Lift plan and this sub-section.

[10] **ENSURE** that the drum lift key has been obtained from the key box.

[11] **ENSURE** that the drum lift key has been inserted, and has been turned to ON in order to establish power to the drum lift.

[12] **ENSURE** that the drum lift has been lowered to the lower limit switch or until the bellyband of the lift cradle can grasp the drum evenly using the drum lift pendent.

[13] **IF** the WCG parent drum port cover is present,
THEN REMOVE the WCG parent drum port cover, and **SET** the WCG parent drum port cover aside.

[14] **ENSURE** that respiratory protection is worn as required by the applicable RWP.

[15] **LOOSEN** the drum closure ring bolt jam nut, as necessary, <u>without loosening the closure ring bolt</u>.

6.2 Parent Drum Loading (continued)

NOTE *The retaining clip (e.g., E-clip) must be an ML-2 component.*

[16] **INSPECT** the four drum lift hinge pins to determine whether all hinge pins have retaining clips (e.g., E-clips) attached to the bottom of the hinge pins and **CHECK** SAT or UNSAT on Attachment 1.

[17] **IF** a retaining clip is missing from a hinge pin,
THEN:

[A] **INSPECT** the hinge pin for damage and **DOCUMENT** deficiencies including hinge pin location in the Comments section of Attachment 1.

[B] **IF** the hinge pin is damaged or the hinge pin does **NOT** completely pass through the hinge,
THEN:

[a] **STOP** the work activity.

[b] **NOTIFY** the WCRRF Operations Center of the hinge pin status.

[c] **REQUEST** the applicable actions from the SOS or designee, and **DOCUMENT** the condition and actions taken in the Comments section of Attachment 1.

[C] **ATTACH** a retaining clip to the hinge pin, ensuring that the clip is properly seated in the groove at the bottom of the hinge pin.

[D] **DOCUMENT** initials, Z number, and date or N/A on Attachment 1 to indicate that the retaining clip was replaced.

[18] **POSITION** the prepared parent drum on the drum lift with the prepared parent drum closure ring bolt accessible for lid removal when the drum closure ring is inside of the WCG.

[19] **CLOSE** and **SECURE** the bellyband on the prepared parent drum, ensuring that the bag-off sleeve does <u>not</u> get caught on the bellyband.

[20] **ENSURE** that the retaining clips are properly seated in the groove at the bottom of the hinge pins.

6.2 Parent Drum Loading (continued)

WARNING

Failure to ensure the Trolley Clamp is positioned next to the WCG prior to lowering or raising the drum lift could lead to equipment damage and personnel injury.

[21] **IF** the Trolley Rail clamp is to be used,
AND is not on the drum rail,
THEN PLACE the trolley rail clamp on the rail and **POSITION** next to the WCG.

[22] **RAISE** the prepared parent drum to the WCG parent drum port using the drum lift pendent, leaving an adequate gap (approximately 12 in.) to attach the bag-off sleeve to the WCG parent drum port.

[23] **BAG ON** the prepared parent drum to the WCG parent drum port in accordance with section 7.1, Parent Drum Bag On, and **RETURN** to the following step.

WARNING

Downward movement of the parent drum could result in the drum bag-off bag separating from the WCG drum port and resulting in the spread of radiological contamination.

[24] **TURN** the drum lift key to OFF, and **REMOVE** the drum lift key, as applicable.

[25] **PLACE** the drum lift key in the key box, as applicable.

6.2 Parent Drum Loading (continued)

[26] **IF** the parent drum is to remain attached to the WCG overnight,
THEN OBTAIN the Environmental and Waste Management Facility Operations-Facility Operations Director (EWMO-FOD) approval to leave the parent drum attached to the WCG overnight, and **DOCUMENT** the approval on Attachment 1.

[27] **IF** the EWMO-FOD does **NOT** approve leaving a parent drum attached to the WCG overnight,
THEN ENSURE that the parent drum is removed before the end of the work day.

[28] **PROCESS** the waste in the parent drum in accordance with Section 10, WCG Waste Processing.

6.3 Parent Drum Unloading

This sub-section is a stand-alone sub-section and may be performed independently of or in conjunction with other sub-sections.

Waste Handling Technician

[1] **ENSURE** that the prerequisite actions have been completed.

[2] **ENSURE** that the parent drum has been bagged off of the WCG in accordance with Section 7.2, Parent Drum Bag Off.

RCT

[3] **PERFORM** radiological surveys as necessary during the waste container handling evolutions.

Waste Handling Technician

[4] **IF** radiological contamination is detected,
THEN FOLLOW the instructions of the RCT and RWP.

[5] **ENSURE** that the drum lift key has been obtained from the key box.

[6] **ENSURE** that the drum lift key has been inserted, and **TURN** the drum lift key to ON in order to establish power to the drum lift.

6.3 Parent Drum Unloading (continued)

WARNING

The drum lift pendant operator is to announce operation of the lift before raising or lowering the drum and all personnel are to stand clear and to the side of drum movement in order to prevent personnel injuries.

[7] **POSITION** a drum dolly to receive the parent drum.

WARNING

Personnel SHALL <u>not</u> place any portion of the body (e.g., hands or arms) under an elevated load in order to prevent serious personal injury.

[8] **LOWER** the parent drum down onto the drum dolly using the drum lift pendent.

[9] **OPEN** the drum bellyband, and **UNLOAD** the parent drum from the drum lift.

[10] **IF** no additional drums are to be loaded with the WCG drum lift,
THEN:

[A] **SECURE** the drum bellyband.

[B] **RAISE** the drum lift to the desired height for stowing using the drum lift pendent.

[C] **TURN** the drum lift key to OFF, and **REMOVE** the drum lift key.

[D] **PLACE** the drum lift key in the key box.

[11] **TAPE** the bagged off parent drum horsetail using vinyl tape.

[12] **PLACE** a layer of containment (e.g., the cutoff end of the parent drum bagged off bag or piece of plastic) over the drum lid.

[13] **TAPE** the entire parent drum lid using vinyl tape.

6.3 Parent Drum Unloading (continued)

NOTE 1 *The RCRA Hazardous Waste Codes of a parent container do not apply to the empty parent container or the empty parent container label when the empty parent container satisfies the RCRA definition of an empty container in 40 CFR 261.7, Residues of Hazardous Waste in Empty Containers.* *http://edocket.access.gpo.gov/cfr_2009/julqtr/pdf/40cfr261.7.pdf.*

NOTE 2 *The following steps may be performed at a time that is operationally convenient.*

[14] **OVERPACK** the empty parent drum in accordance with EP-WCRR-WO-DOP-0236, WCRRF Loading/Unloading SWB or 85-gal Drum.

[15] **MOVE** the empty parent drum to a transportainer in accordance with EP-WCRR-WO-DOP-0202, WCRRF and Building TA-50-69 Waste Container Receipt, Movement, and Transfer.

[16] **ENSURE** that the Inventory Control Personnel have been notified that the empty parent drum has been removed from Building TA-50-69.

7. PERFORMANCE—WCG PARENT DRUM BAG-ON/BAG-OFF OPERATIONS

NOTE 1 *Radiological surveys may be performed as determined necessary [e.g., by an RP representative (e.g., RCT)] anytime during the performance of this procedure.*

NOTE 2 *All manual drum movement will be performed in accordance with Appendix 7, and EP-DIV-Policy-20057, EWMO Health and Safety Policy-Manual Movement.*

7.1 Parent Drum Bag On

This sub-section is a stand-alone sub-section and may be performed independently of or in conjunction with other sub-sections.

Waste Handling Technician

[1] **ENSURE** that the prerequisite actions have been completed.

[2] **WEAR** respiratory protection as required by the applicable RWP.

RCT

[3] **PERFORM** radiological surveys as necessary during the waste container handling evolutions.

Waste Handling Technician

[4] **IF** radiological contamination is detected,
THEN FOLLOW the instructions of the RCT and RWP.

[5] **ENSURE** the parent drum has been loaded onto the WCG in accordance with Section 6.2, Parent Drum Loading.

[6] **ENSURE** that the WCG has been wiped down to reduce radiological contamination.

[7] **SET UP** a portable HEPA-filter exhaust system (MAC-21) in order to increase local airflow at the site of the horsetail during the cutting operation.

[8] **REMOVE** the retaining band from the WCG parent drum port bag-off stub.

[9] **VISUALLY INSPECT** the WCG parent drum port bag-off stub for damage (e.g., tears).

7.1 Parent Drum Bag On (continued)

[10] **IF** the WCG parent drum port bag-off stub is damaged (e.g., tears),
THEN:

[A] **REPAIR** the damage (e.g., tears) using vinyl tape.

[B] **REQUEST** an RCT survey for radiological contamination.

[C] **IF** radiological contamination is detected,
THEN FOLLOW the instructions of the RCT and RWP.

[11] **SLIDE** the bag-off stub down to the port opening side of the ring closest to the WCG.

[12] **SWIPE** around the WCG parent drum port with a maslin smear, and **REQUEST** an RCT monitor the swipe for radiological contamination.

[13] **IF** radiological contamination is detected,
THEN FOLLOW the instructions of the RCT and RWP.

NOTE *The new bag-on bag is attached to the parent drum.*

[14] **SLIDE** the new bag-on bag over the old bag-on bag stub to the inner ring of the WCG parent drum port.

[15] **APPLY** vinyl tape to the new bag-on bag where the retaining band buckle is to be placed.

[16] **SECURE** the new bag-on bag with the retaining band.

[17] **REMOVE** the bag-off stub from the WCG parent drum port, and **DROP** the bag-off stub into the glovebox.

7.1 Parent Drum Bag On (continued)

WARNING

The drum lift pendant operator is to announce operation of the lift before raising or lowering the drum and all personnel are to stand clear and to the side of drum movement in order to prevent personnel injuries.

[18] **ALTERNATELY RAISE** the parent drum and **GUIDE** the bag-on bag to prevent damage to the bag-on bag until the parent drum has been raised to the upper limit switch or until the drum is adequately inserted.

NOTE *The Trolley Rail Clamp is used at the discretion of the PIC, and/or when processing heavy drums to act as a rail stop to restrict forward drum movement when removing heavy items from drum into glovebox.*

[19] **IF** the Trolley Rail Clamp is to be used,
THEN:

[A] **SLIDE** the Trolley Rail Clamp against the drum trolley rail assembly next to the lifting fixture.

[B] **TIGHTEN** the Trolley Rail clamp handle clockwise to secure the clamp against the drum trolley.

7.2 Parent Drum Bag Off

This sub-section is a stand-alone sub-section and may be performed independently of or in conjunction with other sub-sections.

Waste Handling Technician

[1] **ENSURE** that the prerequisite actions have been completed.

[2] **WEAR** respiratory protection as required by the applicable RWP.

RCT

[3] **PERFORM** radiological surveys as necessary during the waste container handling evolutions.

7.2 Parent Drum Bag Off (continued)

Waste Handling Technician

[4] **IF** radiological contamination is detected,
THEN FOLLOW the instructions of the RCT and RWP.

[5] **IF** Trolley Rail Clamp was used,
THEN LOOSEN handle counterclockwise and **SLIDE** the Trolley Rail Clamp away from the drum trolley (towards the WCG).

[6] **PLACE** the drum lid and drum closure ring bolt are on the parent waste drum.

[7] **IF** the parent drum closure ring **CANNOT** be properly attached to the parent drum,
AND the parent drum is empty,
THEN:

[A] **AFFIX** the closure ring, if possible, to the parent drum and **TAPE** the parent drum lid onto the drum using vinyl tape or equivalent.

[B] **GO** to Step 7.2[11].

NOTE *The removal of a parent drum from the WCG which contains waste material must be performed as a critical lift.*

[8] **IF** the parent drum closure ring **CANNOT** be properly attached to the parent drum,
AND the parent drum contains waste material,
THEN:

[A] **STOP** the activity and place waste material in a safe configuration (e.g., cover with a fire blanket).

[B] **NOTIFY** supervision and the WCRRF Operations Center of the discrepancy and **REQUEST** the applicable actions.

[9] **ENSURE** that the drum closure ring bolt jam nut is tightened against the non-threaded lug of the drum closure ring.

[10] **ENSURE** that duct tape has been placed on the drum closure ring bolt in order to prevent damage to the bag-off sleeve.

[11] **ENSURE** that the WCG has been wiped down to reduce radiological contamination.

7.2 Parent Drum Bag Off (continued)

[12] **SET UP** a portable HEPA-filter exhaust system (MAC-21) to increase local airflow at the site of the horsetail during the cutting operation.

[13] **OBTAIN** the drum lift key from the key box, as applicable.

[14] **INSERT** the drum lift key, and **TURN** the drum lift key to ON in order to establish power to the drum lift, as applicable.

WARNING

The drum lift pendant operator is to announce operation of the lift before raising or lowering the drum and all personnel are to stand clear and to the side of drum movement in order to prevent personnel injuries.

[15] **LOWER** the parent drum sufficiently to create a horsetail using the drum lift pendent.

[16] **INSPECT** the bag-off bag for damage (e.g., tears).

[17] **IF** bag-off bag is damaged (e.g., tears),
THEN:

[A] **REPAIR** the damage (e.g., tears) using vinyl tape.

[B] **REQUEST** an RCT survey for radiological contamination.

[C] **IF** radiological contamination is detected,
THEN FOLLOW the instructions of the RCT and RWP.

[18] **MIST** inside of the bag-off bag with spray cleaner and **RUB** the bag-off bag together to ensure the complete coverage of the spray cleaner in order to control contamination.

[19] **SQUEEZE** as much air as possible out of the bag-off bag.

[20] **GATHER** the bag-off bag and **COMPRESS** the bag-off bag in order to create a horsetail approximately 8 to 10 in. long.

[21] **TIGHTLY SECURE** the horsetail with vinyl tape or filament tape.

7.2 Parent Drum Bag Off (continued)

[22] **FIRMLY ATTACH** two binding ties near the center of the horsetail, approximately 6 in. apart.

[23] **IF** bagging off the last parent drum for the work day,
THEN FIRMLY ATTACH a second binding tie approximately 2 in. from the center of the horsetail on the WCG side of the horsetail.

NOTE *The excess part of the binding tie protruding through the binding tie latch is not to be cut off.*

[24] **COVER** the attached binding ties with vinyl tape.

Waste Handling Technician Three

[25] **POSITION** the horsetail cutters between the binding ties of the horsetail.

Waste Handling Technician One

[26] **GRASP** the top of horsetail.

Waste Handling Technician Two

[27] **GRASP** the bottom of horsetail.

WARNING

Extremities SHALL not be placed inside the jaws of the cutting tool in order to prevent personnel injury due to pinching.

Waste Handling Technician Three

[28] **CUT** the horsetail between the binding ties.

Waste Handling Technician One and Two

[29] **SIMULTANEOUSLY COVER** the cut stubs of the bag-off bag with vinyl tape.

[30] **ENSURE** that the cut-stubs have been covered with a final layer of vinyl tape, as directed by an RCT.

7.2 Parent Drum Bag Off (continued)

NOTE 1 *Used cheesecloth are to be disposed of as compactable waste.*

NOTE 2 *The following step may be performed out of sequence.*

Waste Handling Technician Three

[31] **WIPE** down the cutters used to cut the horsetail, place the cutters in a holder, and place the cutters in the designated staging area.

NOTE *Used cheesecloth are to be disposed of in the compactable waste container.*

Waste Handling Technician

[32] **DECONTAMINATE**, as necessary, in accordance with RCT instructions.

[33] **REMOVE** the empty parent drum from the WCG drum lifting device in accordance with Section 6.3, Parent Drum Unloading.

8. PERFORMANCE—WCG DAUGHTER DRUM, BAGPORT, OR GLOVEPORT BAG-ON/BAG-OFF OPERATIONS

NOTE 1 *Radiological surveys may be performed as determined necessary [e.g., by an RP representative (e.g., RCT)] anytime during the performance of this procedure.*

NOTE 2 *All manual drum movement will be performed in accordance with Appendix 7, and EP-DIV-Policy-20057, EWMO Health and Safety Policy-Manual Movement.*

8.1 Bag On Daughter Drum, Bagport, or Gloveport

This sub-section is a stand-alone sub-section and may be performed independently of or in conjunction with other sub-sections.

NOTE *This section provides instructions for bagging onto the WCG at a daughter drum port, bagport, or gloveport.*

Waste Handling Technician

[1] **ENSURE** that the prerequisite actions have been completed.

[2] **IF** a daughter drum is to be bagged onto the WCG,
THEN ENSURE that the daughter drum has been prepared in accordance with EP-WCRR-WO-DOP-0221.

[3] **WEAR** respiratory protection as required by the applicable RWP.

RCT

[4] **PERFORM** radiological surveys as necessary during the waste container handling evolutions.

Waste Handling Technician

[5] **IF** radiological contamination is detected,
THEN FOLLOW the instructions of the RCT and RWP.

[6] **ENSURE** that the WCG has been wiped down to reduce radiological contamination.

[7] **IF** directed by an RCT to establish a portable HEPA-filter exhaust system,
THEN SET UP a portable HEPA-filter exhaust system (MAC-21)in order to increase the local airflow at the site of the horsetail during the cutting operation.

[8] **REMOVE** the retaining band from the bag-off stub.

8.1 Bag On Daughter Drum, Bagport, or Gloveport (continued)

[9] **VISUALLY INSPECT** under the retaining band of the previous drum/bagport/gloveport bag-off stub for damage (e.g., tears).

[10] **IF** the previous drum/bagport/gloveport bag-off stub is damaged (e.g., tears),
THEN SEAL the damaged area with vinyl tape.

[11] **SLIDE** the bag-off stub down to the port opening side of the ring closest to the WCG.

[12] **SWIPE** around the port with a maslin smear, and **REQUEST** an RCT monitor the swipe for radiological contamination.

[13] **IF** radiological contamination is detected,
THEN FOLLOW the instructions of the RCT and RWP.

[14] **SLIDE** a new bag-on bag over the bag-off stub.

[15] **ADHERE** vinyl tape to the new bag-on bag where the retaining band buckle is to be placed.

[16] **SECURE** the new bag with the retaining band.

[17] **REMOVE** the bag-off bag stub and drop the bag-off bag stub into the daughter drum/bagport bag/gloveport bag, as applicable.

[18] **IF** bagging on a daughter drum,
THEN:

[A] **MOVE** the drum from the drum dolly to the vertical lift table.

[B] **MANUALLY RAISE** the drum to the appropriate height.

8.2 Bag Off Daughter Drum

This sub-section is a stand-alone sub-section and may be performed independently of or in conjunction with other sub-sections.

NOTE *This section provides instructions for bagging off a daughter drum from the WCG.*

Waste Handling Technician

[1] **ENSURE** that the prerequisite actions have been completed.

[2] **WEAR** respiratory protection as required by the applicable RWP.

RCT

[3] **PERFORM** radiological surveys as necessary during the waste container handling evolutions.

Waste Operator

[4] **IF** radiological contamination is detected,
THEN FOLLOW the instructions of the RCT and RWP.

[5] **ENSURE** that the WCG has been wiped down to reduce radiological contamination.

[6] **SET UP** a portable HEPA-filter exhaust system (MAC-21) in order to increase the local airflow at the site of the horsetail during the cutting operation.

[7] **MANUALLY LOWER** the vertical lift table.

[8] **INSPECT** the bag-off bag for damage (e.g., tears).

[9] **IF** the bag-off bag is damaged (e.g., tears),
THEN:

[A] **REPAIR** the damage (e.g., tears) using vinyl tape.

[B] **REQUEST** an RCT survey for radiological contamination.

[C] **IF** radiological contamination is detected,
THEN FOLLOW the instructions of the RCT and RWP.

8.2 Bag Off Daughter Drum (continued)

WARNING

Proper lifting techniques and buddy system SHALL be used when moving a daughter drum from the lift table to the drum dolly in order to prevent personnel injury and to prevent separating the daughter drum bag-off bag from the WCG daughter drum port.

NOTE *A VersaLift may be used to assist the lifting of a drum off of the vertical lift table.*

[10] **MOVE** the drum from the vertical lift table to a drum dolly.

[11] **MIST** inside of the bag-off bag with spray cleaner and **RUB** the bag-off bag together to ensure the complete coverage of the spray cleaner in order to control contamination.

[12] **SQUEEZE** as much air as possible out of the bag-off bag.

[13] **GATHER** the bag-off bag.

[14] **ROTATE** the drum <u>or</u> **COMPRESS** the bag-off bag (as applicable) in order to create a horsetail approximately 8 to 10 in. long.

[15] **TIGHTLY SECURE** the horsetail with vinyl tape or filament tape.

[16] **FIRMLY ATTACH** two binding ties near the center of the horsetail, approximately 6 in. apart.

NOTE *The excess part of the binding tie protruding through the binding tie latch is <u>not</u> to be cut off.*

[17] **COVER** the attached binding ties with vinyl tape.

Waste Handling Technician Three

[18] **POSITION** the horsetail cutters between the binding ties of the horsetail.

Waste Handling Technician One

[19] **GRASP** top of horsetail.

8.2 Bag Off Daughter Drum (continued)

Waste Handling Technician Two

[20] **GRASP** the bottom of the horsetail.

WARNING

Extremities SHALL <u>not</u> be placed inside the jaws of the cutting tool in order to prevent personnel injury due to pinching.

Waste Handling Technician Three

[21] **CUT** the horsetail between the binding ties.

Waste Handling Technician One and Two

[22] **SIMULTANEOUSLY COVER** the cut stubs of the bag-off bag with vinyl tape.

[23] **ENSURE** that the cut-stubs have been covered with a final layer of vinyl tape, as directed by an RCT.

NOTE 1 *Used cheesecloth **SHALL** be disposed of as compactable waste.*

NOTE 2 *The following step may be performed out of sequence.*

Waste Handling Technician Three

[24] **WIPE** down the cutters used to cut the horsetail, place the cutters in a holder, and place the cutters in the designated staging area.

Waste Handling Technician

[25] **IF** the bag-off bag has a filter that is covered with tape,
THEN:

[A] **REMOVE** the tape from bag filter.

[B] **REQUEST** an RCT survey for radiological contamination.

[C] **IF** radiological contamination is detected,
THEN FOLLOW the instructions of the RCT and RWP.

8.2 Bag Off Daughter Drum (continued)

[26] **IF** a POC was bagged off of the WCG,
THEN GO to Step 10.2[13].

NOTE 1 *Waste containers with liquids (any amount or configuration) that have not been solidified (absorbed) must be managed on secondary containment pallets and have a FREE LIQUID label affixed.*

NOTE *All parent drum RCRA Hazardous Waste Codes are not assigned to a daughter drum when the reason (item) for assigning a RCRA Hazardous Waste Code to the parent drum has not been placed into the daughter drum. The WMC can assist with assigning the appropriate RCRA Hazardous Waste Codes to a drum.*

[27] **CLOSE** the daughter drum in accordance with EP-WCRR-WO-DOP-0221.

[28] **ENSURE** that the Inventory Control Personnel have been notified that daughter drums and an empty parent drum have been generated in Building TA-50-69.

9. PERFORMANCE—ITEM BAG-IN/BAG-OUT OPERATIONS

NOTE *Radiological surveys may be performed as determined necessary [e.g., by an RP representative (e.g., RCT)] anytime during the performance of this procedure.*

9.1 WCG Item Bag-Out

This sub-section is a stand-alone sub-section and may be performed independently of or in conjunction with other sub-sections.

Waste Handling Technician

[1] **ENSURE** that the prerequisite actions have been completed.

[2] **WEAR** respiratory protection as required by the applicable RWP.

RCT

[3] **PERFORM** radiological surveys as necessary during the waste container handling evolutions.

Waste Handling Technician

[4] **IF** radiological contamination is detected,
THEN FOLLOW the instructions of the RCT and RWP.

[5] **ENSURE** that a portable CAM is placed in the vicinity of the filtered bagout bag during WCG operations as directed by RP-1.

[6] **IF** a bag is required on the WCG port,
THEN:

[A] **ENSURE** that the WCG has been wiped down to reduce radiological contamination.

[B] **SET UP** a portable HEPA-filter exhaust system (MAC-21) and elephant trunk as close as possible to the filtered bagout bag in order to increase the local airflow at the site of the horsetail during the cutting operation.

NOTE *Glovebox negative pressure **SHALL** be used to the extent possible in order to remove excess air from the filtered bag-out bag during bagout operations.*

[C] **REMOVE** the retaining band from the drum/bagport/gloveport bag-out stub.

9.1 WCG Item Bag-Out (continued)

[D] **VISUALLY INSPECT** under the retaining band of the previous drum/bagport/gloveport bag-out stub for damage (e.g., tears).

[E] **IF** the previous drum/bagport/gloveport bag-out stub is damaged (e.g., tears), **THEN SEAL** the damaged area with vinyl tape.

[F] **SLIDE** the bag-out stub down to the outer ring of the port (drum, bagport, or gloveport).

[G] **SWIPE** around the port with a maslin smear, and **REQUEST** an RCT monitor the swipe for radiological contamination.

[H] **IF** radiological contamination is detected,
THEN FOLLOW the instructions of the RCT and RWP.

[I] **SLIDE** new bag-on bag over the bag-out stub.

[J] **ADHERE** vinyl tape to the new bag-on bag where the retaining band buckle is to be placed.

[K] **SECURE** the new bag-on bag with the retaining band.

[L] **REMOVE** the bag-out bag stub and drop the bag-out bag stub into the daughter drum/bagport bag/gloveport bag, as applicable.

[7] **ENSURE** that the WCG has been wiped down to reduce radiological contamination.

[8] **ENSURE** a portable HEPA-filter exhaust system (MAC-21) and elephant trunk are set up as close as possible to the filtered bagout bag in order to increase the local airflow at the site of the horsetail during the cutting operation.

[9] **SLIDE** the item to be bagged out to the end of the bag-out bag.

[10] **INSPECT** the bag-out bag for damage (e.g., tears).

[11] **IF** the bag-out bag is damaged (e.g., tears),
THEN:

[A] **REPAIR** the damage (e.g., tears) using vinyl tape.

9.1 WCG Item Bag-Out (continued)

[B] **REQUEST** an RCT survey for radiological contamination.

[C] **IF** radiological contamination is detected,
THEN FOLLOW the instructions of the RCT and RWP.

[12] **MIST** inside of the bag-out bag with spray cleaner and **RUB** the bag-out bag together to ensure the complete coverage of the spray cleaner in order to control contamination.

[13] **SQUEEZE** as much air as possible out of the bag-out bag.

[14] **GATHER** the bag-out bag.

[15] **ROTATE** the drum <u>or</u> **COMPRESS** the bag-out bag (as applicable) in order to create a horsetail approximately 8 to 10 in. long.

[16] **TIGHTLY SECURE** the horsetail with vinyl tape or filament tape.

[17] **ENSURE** that the horsetail is located far enough away from the filtered bagout bag to avoid creasing, folding, or otherwise challenging the integrity of the filter.

[18] **FIRMLY ATTACH** two binding ties near the center of the horsetail, approximately 6 in. apart.

[19] **IF** bagging out the last item for the work day,
THEN FIRMLY ATTACH a second binding tie approximately 2 in. from the center of the horsetail on the WCG side of the horsetail.

NOTE *The excess part of the binding tie protruding through the binding tie latch tie is <u>not</u> to be cut off.*

[20] **COVER** the attached binding ties with vinyl tape.

Waste Handling Technician Three

[21] **POSITION** the horsetail cutters between the binding ties of the horsetail.

Waste Handling Technician One

[22] **GRASP** top of horsetail.

9.1 WCG Item Bag-Out (continued)

Waste Handling Technician Two

[23] **GRASP** bottom of horsetail.

WARNING

Extremities SHALL <u>not</u> be placed inside the jaws of the cutting tool in order to prevent personnel injury due to pinching.

Waste Handling Technician Three

[24] **CUT** the horsetail between the binding ties.

Waste Handling Technician One and Two

[25] **SIMULTANEOUSLY COVER** the cut stubs of the bag-out bag with vinyl tape.

[26] **ENSURE** that the cut-stubs have been covered with a final layer of vinyl tape, as directed by an RCT.

NOTE 1 *Used cheesecloth **SHALL** be disposed of as compactable waste.*

NOTE 2 *The following step may be performed out of sequence.*

Waste Handling Technician Three

[27] **WIPE** down the cutters used to cut the horsetail, and **PLACE** the cutters in a holder, and **PLACE** the cutters in the designated staging area.

Waste Handling Technician

[28] **IF** the bag-out bag has a filter that is covered with tape,
THEN:

[A] **REMOVE** the tape from bag filter.

[B] **REQUEST** an RCT survey for radiological contamination.

[C] **IF** radiological contamination is detected,
THEN FOLLOW the instructions of the RCT and RWP.

9.2 WCG Introductory Port

This sub-section is a stand-alone sub-section and may be performed independently of or in conjunction with other sub-sections.

NOTE *This sub-section provides instructions for introducing items into the WCG.*

WARNING

Items are not to be removed from the WCG using the airlock since items placed in the airlock from the interior of the WCG are possibly radiologically contaminated.

Waste Handling Technician

[1] **ENSURE** that the prerequisite actions have been completed.

[2] **PREPARE** the area in accordance with RCT instructions.

[3] **WEAR** respiratory protection as required by the applicable RWP.

RCT

[4] **PERFORM** radiological surveys as necessary during the waste container handling evolutions.

Waste Handling Technician

[5] **IF** radiological contamination is detected,
THEN FOLLOW the instructions of the RCT and RWP.

WARNING

Both WCG airlock doors are to remain closed until they must be opened to introduce an item into the WCG in order to prevent releasing radiological contamination out of the WCG.

[6] **ENSURE** that both WCG Introductory Port doors are securely closed.

9.2 WCG Introductory Port (continued)

[7] **OPEN** the outer WCG Introductory Port door.

WARNING

Items are to be placed inside of the WCG airlock in a manner that does <u>not</u> disturb the WCG airlock surfaces in order to mitigate the spread of radiological contamination.

[8] **GENTLY PLACE** the item to be introduced into the WCG airlock.

[9] **CLOSE** the outer WCG Introductory Port door.

[10] **OPEN** the inner WCG Introductory Port door.

[11] **REMOVE** the item from the WCG Introductory Port and **PLACE** the item in the WCG.

[12] **CLOSE** the inner WCG Introductory Port door.

[13] **VERIFY** that both WCG Introductory Port doors are securely closed.

10. PERFORMANCE—WCG WASTE PROCESSING

This section is a stand-alone section and may be performed independently of or in conjunction with other Performance sections.

NOTE 1 *Radiological surveys may be performed as determined necessary [e.g., by an RP representative (e.g., RCT)] anytime during the performance of this procedure.*

NOTE 2 *The WCATS desktop application WCRR-REMED is performed in conjunction with this section.*

NOTE 3 *All manual drum movement will be performed in accordance with Appendix 7, Manual Drum Movements Special Instructions and EP-DIV-Policy-20057, EWMO Health and Safety Policy-Manual Movement.*

10.1 WCG Waste Processing Preparation

Waste Handling Technician

[1] **ENSURE** that the prerequisite actions have been completed.

[2] **ENSURE** that the battery charger for the cordless drill in the WCG has been unplugged.

[3] **ENSURE** that the parent drum has been bagged onto the WCG in accordance with Section 7.1, Parent Drum Bag On.

NOTE *The following step may be performed out of sequence.*

[4] **ENSURE** that the daughter drums have been bagged onto the WCG in accordance with Section 8.1, Bag On Daughter Drum, Bagport, or Gloveport, and **RECORD** the following information on Attachment 1:

- Daughter Drum Number
- Daughter Drum Filter Number
- Daughter Drum Bag Filter Number
- Daughter Drum Purchase Order Number

[5] **IF** VE activities are to occur,
THEN ENSURE that CCP-TP-113, Standard Contact Handled Waste Visual Examination, is performed concurrently with this procedure.

10.1 WCG Waste Processing Preparation (continued)

[6] **SLOWLY REMOVE** the parent drum lid, being prepared to close the lid if there are unexpected conditions.

[7] **EXAMINE** the contents of the parent drum, and **DETERMINE** whether the contents of the drum have any unexpected items.

[8] **IF** any unexpected items are present in the parent drum,
THEN:

[A] **CLOSE** the parent drum.

[B] **NOTIFY** supervision and the WCRRF Operations Center of the discrepancy, and **REQUEST** the applicable actions.

[C] **DOCUMENT** the discrepancy and applicable actions in the Comments section of Attachment 1.

NOTE *Placing the parent drum lid over the waste items being surveyed is a simulation of the waste items being inside of a drum and provides a representation of the expected dose rate outside of the drum in order to determine whether the dose rate may exceed 190 mrem/hr and is the desired survey method.*

[9] **ENSURE** that a drum lid is placed over the waste items to be surveyed, as necessary, and **REQUEST** an RCT perform radiological surveys of the items being removed from the parent drum.

NOTE 1 *Unvented, Sealed waste packages are those waste packages that have a positive locking mechanism, such as a gasket with drum closure ring or a screw top lid (with no other openings) to seal the lid to the waste package.*

[10] **IF** the parent drum contains an unvented, sealed waste package,
THEN:

[A] **RECORD** the parent drum identification number on Attachment 3, WCRRF WCG Breaching (Opening) Unvented, Sealed Waste Packages.

10.1 WCG Waste Processing Preparation (continued)

NOTE *Multiple copies of Attachment 3 may be required for parent drums containing more than four unvented, sealed waste packages that are 5- to 30 gal. Only a single copy of Attachment 3 is necessary for parent drums with multiple unvented, sealed waste packages that are less than 5 gal.*

[B] **CHECK** (√) the applicable box on Attachment 3 to indicate the type of unvented, sealed waste package (e.g., Metal 5- to 30-gal, Non-metallic 5- to 30-gal, or < 5-gal).

NOTE *The cordless drill is considered to be a spark-producing tool and is to be placed aside in the WCG, and <u>not</u> handled, when non-sparking tools are required.*

[C] **($) ENSURE** that non-sparking tools are available for use in the WCG, and **ENSURE** that the availability of the non-sparking tools has been documented on Attachment 3. (SAC 5.10.1.6.1).

NOTE *Administrative Control Lock Log Sheet form 10.4 of EP-DIV-AP-0117* ***SHALL*** *be completed anytime the lock is placed or removed for WCG receptacles lockout.*

[D] **($) ENSURE** that the WCG electrical receptacles have been de-energized and locked open/off with an administrative lock, and **CHECK (√)** SAT or UNSAT on Attachment 3, and **MAKE** an entry on the Administrative Control Log Sheet to document that the WCG electrical receptacles are locked open/off. (SAC 5.10.1.6.2)

10.1 WCG Waste Processing Preparation (continued)

NOTE 1 *A proper ground requires that all ends of the grounding strap be firmly attached to a clean-bare metal surface.*

NOTE 2 *Attachment 4,WCRRF WCG Breaching (Opening) Metal 5- to 30-gal Unvented-Sealed Waste Packages Surveillance, is completed to document the operator and independent verifier installing the grounding devices within TA-50-69.*

NOTE 3 *The following step is to be performed by an operator and then independently verified by a second operator.*

NOTE 4 *Separate copies of Attachment 4 are required for each waste package.*

Waste Handling Technician

[E] **IF** the waste package is a METAL 5- to 30-gal waste package,
THEN:

[a] **RECORD** the parent drum identification number on Attachment 4.

[b] **($) ENSURE** that the parent drum has been properly grounded to the WCG using a grounding strap in the WCG, and **CHECK** (√) SAT or UNSAT on Attachment 4 to document that the grounding strap was attached. (SR 4.6.1)

Independent Verifier

[c] **VERIFY** that the parent drum has been properly grounded to the WCG using a grounding strap in the WCG, and **CHECK** (√) SAT or UNSAT on Attachment 4.

10.1 WCG Waste Processing Preparation (continued)

Waste Handling Technician

[11] **IF** processing a parent drum containing an unvented, sealed 5- to 30-gal waste package, **THEN:**

WARNING

Unvented, sealed waste packages may contain a concentration of hydrogen gas and are to be handled or identified in this document using grounding devices and lid restraints in order to minimize any possible adverse effects from potentially releasing hydrogen.

NOTE *Drum lid restraints that are not in use are to be stored in such a matter that the drum lid restraints are protected from degradation (e.g., in a daughter drum).*

[A] **($) VISUALLY** inspect the waste package lid restraint for the following, and **DOCUMENT** the results of the inspection on Attachment 3:

- Degradation (e.g., no indication of cracked parts, missing fasteners, loose or frayed parts, excessive wear, or unusual deformation) (SAC 5.10.1.5.1)
- Missing or illegible identification
- Melting or charring
- Broken or worn stitching in load bearing splices
- Knots in any part of the drum lid restraint
- Discoloration and brittle or stiff areas

[B] **($) ATTACH** the waste package lid restraint to the waste package and verify proper installation, and **DOCUMENT** that the lid restraint has been attached on Attachment 3. (SAC 5.10.1.5.1)

NOTE 1 *A proper ground requires that all ends of the grounding strap be firmly attached to a clean-bare metal surface.*

NOTE 2 *Separate copies of Attachment 3 are required for each waste package.*

[C] **($) IF** the waste package is a METAL 5- to 30-gal waste package, **THEN GROUND** the metal waste package using a grounding strap in the WCG, and **CHECK** (√) SAT or UNSAT on Attachment 4 to document that the grounding strap was attached.. (LCO 3.6 and SR 4.6.1)

Independent Verifier

[D] **VERIFY** that the grounding strap is attached and **CHECK** (√) SAT or UNSAT on Attachment 4.

10.1 WCG Waste Processing Preparation (continued)

[E] **RECORD** the following information, Name, Signature, Z Number and Date on Attachment 4.

Waste Handling Technician

[F] **($) IF** the grounding strap was attached to a waste package or parent drum, **AND** the grounding strap becomes detached from either the waste package or the parent drum during the opening of the waste package,
THEN ENTER the Actions of LCO 3.6, and **NOTIFY** the WCRRF Operations Center. (LCO 3.6)

[G] **OPEN** the waste package, and **REMOVE** the lid restraint and waste package lid.

[H] **ENSURE** that the lid restraint and waste package lid are placed out of the way of the open end of the waste package.

[I] **($) RECORD** the time that the lid restraint and waste package lid were removed from the waste package on Attachment 3. (SAC 5.10.1.5.2 and SAC 5.10.1.6.3)

[J] **ENSURE** that all WCG operations have been suspended.

[K] **($) WHEN** 30 min. has elapsed,
THEN DOCUMENT the time and that greater than or equal to 30 min. has elapsed since the lid restraint and waste package lid were removed on Attachment 3. (SAC 5.10.1.5.2 and SAC 5.10.1.6.3)

[L] **RESUME** operations as directed by supervision.

[M] **REMOVE** the grounding straps from the metal waste package, as applicable.

[N] **IF** the waste packaged opened contains a 5- to 30-gal unvented, sealed waste package,
THEN GO to Step 10.1.[11][A].

[O] **IF** the waste package opened contains an unvented, sealed waste package of less than 5 gal,
THEN GO to Step 10.1[12].

[P] **REMOVE** the grounding straps from the parent drum.

10.1 WCG Waste Processing Preparation (continued)

[Q] **IF** directed by supervision,
THEN REMOVE the administrative lock from the WCG electrical receptacles, and **ENERGIZE** the WCG electrical receptacles.

[12] **IF** processing a parent drum containing an unvented, sealed waste packages of less than 5 gal,
THEN:

[A] **OPEN** the waste packages, and **REMOVE** the waste package lids.

NOTE *For situations where multiple waste packages are being opened (e.g., sample vials) the 30-min. wait period before the electrical receptacles may be re-energized starts after the last waste package is opened.*

[B] **($) RECORD** the time that the last unvented, sealed waste package lid was removed from the waste package on Attachment 3. (SAC 5.10.1.6.3)

WARNING

The WCG electrical receptacles is not to be re-energized until 30 min. has elapsed since the unvented waste package was opened in order to prevent the possibility of a flammable gas mixture deflagration.

NOTE *Glovebox operations may continue after opening a less than 5 gal-unvented sealed waste package while waiting the required 30 min. before re-energizing the WCG electrical receptacles.*

[C] **WHEN** 30 min. has elapsed,
THEN:

[a] **($) DOCUMENT** the time and that that greater than or equal to 30 min. has elapsed since the waste package lid was removed on Attachment 3. (SAC 5.10.1.6.3)

10.1 WCG Waste Processing Preparation (continued)

[b] **REMOVE** the grounding straps from the parent drum.

[c] **REMOVE** the administrative lock from the WCG electrical receptacles, and energize the WCG electrical receptacles as directed by supervision.

[13] **IF** sparking is observed at anytime during the processing of waste material, **THEN:**

[A] **PLACE** a fire barrier (e.g., MET-L-X or fire blanket) over the suspect waste material.

[B] **STOP** waste processing.

[C] **ENSURE** that a Fire Watch has been stationed at the WCG to continuously monitor the waste in the WCG, and **CHECK** (√) YES or NO on Attachment 1.

NOTE *The following personnel are notified by the WCRRF Operations Center:*

- *OM or designee*
- *Solid Waste Regulatory Compliance Group*
- *Industrial Hygienist*
- *Cognizant System Engineer*
- *Radiation Protection*

[D] **NOTIFY** the WCRRF Operations Center/Shift Operations Manager of the discrepancy, and **DOCUMENT** the notification and discrepancy in the Comments section of Attachment 1:

[E] **IF** the suspect item is to be bagged out of the WCG, **THEN BAG OUT** the suspect item in accordance with Section 9.1, WCG Item Bag-Out.

[F] **PLACE** the suspect item in an empty daughter drum.

[G] **IF** the daughter drum is attached to the WCG, **THEN BAG OFF** the daughter drum in accordance with Section 8.2, Bag Off Daughter Drum.

[H] **CLOSE** the daughter drum in accordance with EP-WCRR-WO-DOP-0221.

10.1 WCG Waste Processing Preparation (continued)

[14] **IF** a shielded container (e.g., lead lined) is in the parent drum,
THEN:

WARNING

Personnel are to avoid the high radiation exposure area in front of a shielded container that has been accessed in order to prevent increased exposure to radiation due to radiation streaming from the open portion of the shielded container.

[A] **ENSURE** that personnel in Building TA-50-69 are notified that a shielded container is to be accessed and that they are positioned such that when the shielded container is accessed the radiation streaming from the shielded container is directed away from personnel.

[B] **ACCESS** the shielded container contents without removing the contents, and **REQUEST** an RCT to perform a radiological survey to determine the radiation levels.

[C] **IF** the radiation level exceeds an RWP limit,
THEN:

[a] **ENSURE** that the shielding has been replaced, and **CLOSE** the shielded container.

[b] **REQUEST** an RCT perform a radiological survey on the closed shielded container to determine the radiation levels.

[c] **IF** the closed, shielded container radiation level exceeds the RWP limits,
THEN:

1. **ENSURE** that all waste material is in a safe configuration.

2. **STOP** the work activity.

3. **COMPLY** with the RCT's instructions to minimize radiological exposure.

4. **NOTIFY** the WCRRF Operations Center of the condition, and **REQUEST** the applicable actions.

10.1 WCG Waste Processing Preparation (continued)

NOTE *Waste placed into daughter drums must be from a single parent drum except for the collection drum (pressurized container or aerosol can).*

[d] **IF** the waste material is **NOT** to be processed at this time as directed by supervision,
THEN:

1. **PLACE** the waste items from the parent drum into a daughter drum.

2. **BAG OFF** the parent and daughter drums in accordance with the applicable section of this procedure.

3. **IF** a Fire Watch was stationed,
THEN ENSURE that all INVENTORY is in a safe configuration, and **SECURE** the Fire Watch, and **CHECK** (√) YES or NO on Attachment 1.

4. **NOTIFY** the WCRRF Operations Center of the waste disposition.

10.1 WCG Waste Processing Preparation (continued)

NOTE 1 *Continued operation may require the work activity to be paused in order to allow operators and supervision to evaluate the condition to determine the necessary response to the situation (e.g., re-enter area under a different RWP or prepare a POC to accept the waste material).*

NOTE 2 ***($)*** *A STATIONARY FIRE WATCH is required in the OPERATION and WARM STANDBY MODE when the WCG INVENTORY is greater than 300 PE-Ci equivalent combustible waste. (AC 5.2.3)*

[D] **WHEN** the appropriate actions have been determined,
THEN GO to Step 10.1[15].

[15] **IF** any of the following items are identified during the processing of waste:

- Lead-elemental (e.g., circuit boards)
- Mercury-elemental (e.g., thermometers or switches)
- Batteries (e.g., lead/acid, nickel cadmium, or lithium)
- Light bulbs (i.e., incandescent or fluorescent)
- PCB items (e.g., ballasts, capacitors, or transformers)
- Liquids (any amount not remediated or absorbed)

THEN:

[A] **RECORD** the item descriptive information (item type, size, trade name, if available) in the Comments section of Attachment 1.

NOTE *The Waste Management Coordinator (WMC) may be notified at a time that operationally convenient.*

[B] **NOTIFY** the Waste Management Coordinator (WMC) of items found and whether the items were removed, placed into a separate collection container, or placed into a daughter drum.

NOTE 1 *The WMC can assist with assigning the appropriate RCRA Hazardous Waste Codes to the daughter drum.*

NOTE 2 *The following step may be performed when operationally convenient but must be completed the same day as the identification of the item.*

[C] **ENSURE** that the appropriate RCRA Hazardous Waste Codes is assigned to the drum that receives the item (e.g., daughter drum or collection drum).

10.1 WCG Waste Processing Preparation (continued)

WARNING

Glass sample vials may contain residual granular plutonium hydride which can generate sparks when subjected to mechanical agitation. To reduce the possibility of breaking a glass sample vial and the generation of sparks glass sample vials SHALL be without excessive force. (EP-DIV-REPORT-09)

NOTE *Multiple sections may be performed and repeated in order to completely disposition all of the waste from a parent drum.*

[16] **PERFORM** the following applicable sub-section:
- Section 10.2, Waste Material Greater Than 190 mrem/hr
- Section 10.3, Prohibited Item Disposition
- Section 10.4, Waste Splitting Activities
- Section 10.5, Repackaging Activities
- Section 10.6, Processing Nitrate Salt Drums

10.2 Waste Material Greater Than 190 mrem/hr

The following sub-section provides instructions for the disposition of waste material with an expected radiation dose rate of greater than 190 mrem/hr on contact with the outside of a waste container. Simulating that the waste material is inside of a daughter waste container (e.g., measured through drum lid) is the desired method of determining the expected radiation dose rate of waste material outside of a waste container.

NOTE 1 *Appendix 5, Flowchart for Processing of High Dose Items of Mixed Material Types, illustrates the process for POC operations.*

NOTE 2 *Waste containers with Nitrate Salt and a radiation dose rate of greater than 190 mrem/hr are to be processed in accordance with Section 10.6, Processing Nitrate Salt Drums, before performing this section. An attempt to reduce the radiation dose rate to less than or equal to 190 mrem/hr by absorbing the Nitrate Salt with absorbent should be attempted first. Nitrate Salt absorption reduces the quantity of POCs required to process the waste material.*

Waste Handling Technician

[1] **ENSURE** that a POC assembly has been prepared and is available.

10.2 Waste Material Greater Than 190 mrem/hr (continued)

[2] **DETERMINE** whether the serial numbers on the pipe component lid and the pipe component are the same.

[3] **IF** the serial numbers do **NOT** match,
THEN:

[A] **IDENTIFY** (e.g., tag or mark) the POC indicating that the POC is defective.

[B] **SEGREGATE** the POC in order to prevent the item from being used.

NOTE *The NCR may be initiated at a time that is operationally convenient.*

[C] **ENSURE** that an NCR is initiated in accordance with P330-6, Nonconformance Reporting, as required.

[D] **NOTIFY** the WCRRF Operations Center of the discrepancy.

[E] **GO** to Step 10.2[1].

[4] **IF** the POC is to be bagged onto the WCG,
THEN RECORD the following POC bag-on bag information on Attachment 1:
- Manufacturer
- Model Number
- Serial Number
- Date of Manufacture

[5] **PLACE** the POC assembly and shielding near the vicinity of the WCG to provide shielding during bag-off operations <u>or</u> bag-on the POC to the WCG in accordance with Section 8.1, Bag On Daughter Drum, Bagport, or Gloveport; and **RECORD** the POC drum number and POC unique identification number on Attachment 1.

[6] **IDENTIFY** items to be placed into a POC assembly, and **ENSURE** that an item description is recorded on Attachment 1.

10.2 Waste Material Greater Than 190 mrem/hr (continued)

[7] **IF** the item is to be bagged off of the WCG and the item is from a waste container with a mixed material type,
THEN:

[A] **REMOVE** any lead shielding from outside of the item, and **PLACE** the lead in a daughter drum.

[B] **ENSURE** that a description of the item is recorded on Attachment 1.

[C] **BAG OFF** the item in accordance with Section 9.1, WCG Item Bag Out.

[D] **IF** there is no lead shielding inside of the item (container),
THEN PLACE the bagged out item inside a shielded (pewter) container or cover with a lead blanket.

[E] **GO** to Step 10.2[9].

NOTE *Shielded container is only used for the purpose of ALARA and not for final waste packaging.*

[8] **IF** an individual item is to be bagged out of the WCG,
THEN:

[A] **BAG OUT** individual items in accordance with Section 9.1, WCG Item Bag Out.

[B] **PLACE** the bagged out items in shielded (pewter) container or cover with a lead blanket, as required.

NOTE 1 *A POC assembly drum is full when it has reached its weight limit of 547 lb, or is physically full.*

NOTE 2 *Waste placed into daughter drums or Pipe Overpack Containers (POCs) must be from a single parent drum.*

[9] **WHEN** the item is to be placed into a POC,
THEN ENSURE that the item has been removed from the shielded (pewter) container or lead blanket, as necessary.

[10] **PLACE** the items into the POC.

10.2 Waste Material Greater Than 190 mrem/hr (continued)

[11] **IF** the POC assembly is **NOT** full,
AND the parent drum is still being processed,
AND the POC assembly is **NOT** bagged onto the WCG,
THEN:

[A] **ALIGN** the lid holes with the holes in the pipe component body.

[B] **HAND-THREAD** the lid bolts as far as possible.

[C] **REPLACE** the fiberboard packaging, being careful to match the pipe bolt heads, hoist ring, and filter with cutouts in fiberboard.

[D] **REPLACE** the spacers, liner lid, and drum lid.

[E] **IF** there are additional 190 mrem/hr items to be bagged out of the WCG, **THEN GO** to Step 10.2[7].

[12] **IF** the POC is bagged onto the WCG,
THEN bag-off the POC in accordance with Section 8.2, Bag Off Daughter Drum

[13] **CLOSE** the POC assembly in accordance with the manufacturer's instructions and **DOCUMENT** (initials and Z number) that the POC assembly has been closed in accordance with the manufacturer's instructions on Attachment 1.

[14] **WEIGH** the POC assembly, and **RECORD** the POC Assembly Gross Weight on Attachment 1.

[15] **REQUEST** an RCT perform a radiation survey of the POC, and **RECORD** the POC radiation survey results on Attachment 1.

[16] **IF** the following requirements are **NOT** satisfied:
- External surface radiation dose rates less than 200 mrem/hr (DOE/WIPP-02-3122)
- Gross weight less than 547 lb for a 12 in. POC (CH-TRAMPAC)

THEN NOTIFY the WCRRF Operations Center of the discrepancy, and **REQUEST** the applicable actions.

[17] **LABEL** the POC assembly drum in accordance with EP-DIV-DOP-20043.

10.2 Waste Material Greater Than 190 mrem/hr (continued)

[18] **IF** all of the waste in the parent drum has **NOT** been dispositioned,
THEN GO to the appropriate sub-section to complete processing the remaining waste.

[19] **GO** to Section 11.1, Disposition.

10.3 Prohibited Item Disposition

The following sub-section provides instructions for the disposition of waste material that is considered to be prohibited items at WIPP.

NOTE 1 *The following activities associated with sorting parent drum waste such as the disposition of liquids, pressurized containers, and PCB-contaminated waste may be performed simultaneously or in any order.*

NOTE 2 *The Hold Tag for CCP NCRs is removed from the parent drum and returned to CCP personnel.*

NOTE 3 *A completed PID package includes the following documents:*
- *Attachment 1, WCRRF WCG Waste Processing Data Sheet*
- *Attachment 5, WCRRF Prohibited Item Collection Drum Data Sheet*
- *EP-WCRR-WO-DOP-0221 Attachment 1, Checklist for the Preparation of a New 55-Gallon Drum Assembly*
- *EP-WCRR-WO-DOP-0221 Attachment 2, Checklist for the Closing of a 55-Gallon Drum Assembly*
- *WDP Waste Remediation Safety Evaluation Data Sheet (EP-DIV-AP-20098 Attachment 1)*

Waste Handling Technician

[1] **LOCATE** any contained, uncontained, or free liquids.

NOTE 1 *Waste containers with liquids (any amount or configuration) that have <u>not</u> been solidified (absorbed) must be managed on secondary containment pallets and have a FREE LIQUID label affixed.*

NOTE 2 *By absorbing all liquids the resulting daughter drum is <u>not</u> required to be stored on a secondary containment pallet.*

[2] **IF** liquid is identified inside of transparent or opaque containers that is <u>less than or equal to</u> 60 ml in the containers,
AND the liquid is **NOT** to be absorbed,
THEN PLACE the containers with liquids into the daughter drum.

10.3 Prohibited Item Disposition (continued)

[3] **IF** liquid is identified inside of a transparent or opaque containers (e.g., contents adequately labeled),
THEN:

[A] **RECORD** the approximate liquid volume on Attachment 1.

[B] **OPEN** the containers.

[C] **PERFORM** a pH test of the liquid using Litmus Paper.
- Acid (less than 7)
- Caustic (base – greater than 7)

[E] **NEUTRALIZE** the liquid, as necessary.

[F] **OBTAIN** the appropriate absorbing agent, and **PLACE** the absorbent into a compatible container (e.g., bottle or bag) that has a volume of less than 4 Liters.

NOTE *Multiple containers of less than 4 liters may be required in order to absorb all of the free liquid.*

[G] **TRANSFER** the liquid into the compatible container (e.g., bottle or bag), and **PLACE** the container (e.g., bottle or bag) inside of the daughter drum.

NOTE *Waste containers with liquids (any amount or configuration) that have <u>not</u> been solidified (absorbed) must be managed on secondary containment pallets and have a FREE LIQUID label affixed.*

[4] **IF** liquid is identified in transparent containers or in opaque containers that **CANNOT** be safely opened (e.g., contents adequately labeled),
THEN:

[A] **PLACE** the containers into the daughter drum.

10.3 Prohibited Item Disposition (continued)

[B] **NOTIFY** the WCRRF Operations Center of the discrepancy, and **DOCUMENT** in the Comments section of Attachment 1.

NOTE *Liquids are not to be combined or bulked.*

[5] **IF** any free liquid is identified,
THEN:

[A] **DETERMINE** the approximate volume of liquid, and **DOCUMENT** the approximate amount of liquid on Attachment 1.

[B] **PERFORM** a pH test on the liquid using Litmus Paper.

[C] **NEUTRALIZE** the liquid, as necessary.

[D] **OBTAIN** the appropriate absorbing agent, and **PLACE** the absorbent in a compatible container (e.g., bottle or bag) that has a volume of less than 4 Liters.

[E] **ADD** a small amount of the free liquid to the container (e.g., bottle or bag).

[F] **IF** any reaction occurs between the absorbent and the free liquid,
THEN:

[a] **STOP** the addition work activities.

[b] **NOTIFY** the WCRRF Operations Center of the condition, and **REQUEST** the applicable actions.

[c] **DOCUMENT** the notifications and actions in the Comments section of Attachment 1.

10.3 Prohibited Item Disposition (continued)

NOTE *Multiple containers (e.g., bottle or bag) of less than 4 liters may be required in order to absorb all of the free liquid.*

[G] **IF** processing Nitrate Salts with free liquids,
THEN GO to Sub-section 10.6, Processing Nitrate Salt Drums.

[H] **MIX** the absorbent with the waste.

[I] **ENSURE** absorbent is thoroughly mixed with the liquid.

NOTE *Absorbing waste containers that are categorized as Nitrate Salts will generate additional daughter drums due to the amount of absorbent required to solidify the waste.*

[J] **PLACE** the containers (e.g., bottle or bag) inside of the daughter drum.

[K] **REPEAT** Step 10.3[5] until all liquids have been absorbed.

NOTE *Appendix3, Volumes of Cylindrical Inner Containers Near 4 Liters, can be used to help determine whether a container is greater than 4 liters.*

[6] **LOCATE** sealed, unpressurized containers greater than 4 liters (that do not contain any liquid), and **DISPOSITION** the container as follows:

[A] **REMOVE** the tape, lid, cap, stopper, or other appropriate method.

[B] **PLACE** the dispositioned items into the daughter drum.

[7] **LOCATE** opaque or non-penetrable item (that do not contain any liquid), and **DISPOSITION** the container as follows:

10.3 Prohibited Item Disposition (continued)

[A] **DESCRIBE** in detail (e.g., size, shape, labeling, weight, material) the opaque or non-penetrable items on Attachment 1.

[B] **PLACE** the dispositioned items into the daughter drum.

[8] **LOCATE** potentially pressurized containers, and **DISPOSITION** the container as follows:

[A] **IF** there is evidence that a potentially pressurized container has been previously punctured and is empty,
THEN:

[a] **PLACE** a metal rod or equivalent (item found in the waste) inside the container and **SECURE** with tape, or **ENLARGE** the hole to be visible by Radiography.

[b] **PLACE** the container inside the daughter drum.

[B] **IF** a potentially pressurized container is **NOT** punctured,
THEN:

[a] **DECONTAMINATE** (wipe down) the potentially pressurized container.

[b] **BAG OUT** the potentially pressurized container in accordance with Section 9.1, WCG Item Bag Out.

NOTE *Item Identification labels are generated as part of performing the WCATS desktop remediation application.*

[c] **PLACE** an Item Identification (ID) label on the potentially pressurized container or bagout bag.

NOTE 1 *A collection drum for pressurized containers and aerosol cans will be established and placed inside one of the WCRRF Transportainers (TSDF).*

NOTE 2 *Pressurized cylinders and aerosol cans must be collected in separate drums (e.g., on collection drum for pressurized cylinders and one collection drum for aerosol cans. All other prohibited items that cannot be remediated must be collected in a separate (third) collection drum.*

[d] **PLACE** the potential pressurized container in a designated collection drum.

10.3 Prohibited Item Disposition (continued)

[e] **ENSURE** that the following information is recorded on Attachment 5 for each item:

- Collection drum number
- Collection drum type (pressurized container, aerosol, or other)
- Date collection drum waste created
- Date item is added to the collection drum
- Item Identification Label Number
- Parent Container Number
- Parent Accumulation Start Date
- Parent EPA Codes
- Item Description
- Item Shape
- Item Size
- Item Labeling
- Item Weight (lb)
- Initials and Z number

NOTE *The hazardous waste label may need to be replaced in order to ensure that all information is added and legible.*

[f] **ENSURE** that the accumulation start date on the collection drum reflects the earliest parent drum accumulation start date recorded on Attachment 5.

[g] **ENSURE** that all EPA Codes from the associated parent drums are documented on the collection drum hazardous waste label.

[9] **IF** any polychlorinated biphenyls (PCB)-contaminated waste is identified, **THEN:**

[A] **DESCRIBE** in detail (e.g., size, shape, labeling, weight, material) the PCB-contaminated waste on Attachment 1.

NOTE *The following step may be performed when operationally convenient.*

[B] **ATTACH** a PCB Item ID Number to the drum receiving the PCB waste (above the top rolling hoop and cover with clear tape), and **RECORD** the PCB Item ID Number on Attachment 1.

10.3 Prohibited Item Disposition (continued)

[C] **PLACE** the PCB-contaminated waste into a daughter drum.

[10] **DOCUMENT** a description of the type of remaining waste added to each daughter drum during the processing of waste from a parent drum on Attachment 1.

[11] **REPEAT** Steps 10.3[2] though 10.3[10] as necessary to completely resolve any PIDs within the parent drum.

[12] **IF** all of the waste in the parent drum has **NOT** been dispositioned,
THEN GO to the appropriate sub-section to complete processing the remaining waste.

NOTE *The following step may be performed out of sequence.*

[13] **DETERMINE** the level of waste placed into the daughter drum, and **RECORD** the Daughter Drum % Full value (%) on Attachment 1.

[14] **BAG OFF** waste containers in accordance with Section 7.2, Parent Drum Bag Off; and Section 8.2, Bag Off Daughter Drum.

[15] **GO** to Section 11.1, Disposition.

10.4 Waste Splitting Activities

The following steps provide instructions for the disposition of waste material with a PE-Ci value that requires the waste material to be divided into multiple daughter drums.

This sub-section is performed following the assaying of the parent drum and the determination of the number of daughter drums to be generated from the parent drum.

Waste Handling Technician

[1] **CAREFULLY REMOVE** a portion of the parent drum's contents (waste items).

[2] **NOTIFY** the Assay Personnel of the estimated weight of the items, as requested.

[3] **PLACE** the waste items into the WCG metal bucket.

[4] **LOWER** the metal bucket into the east daughter drum (closet to airlock).

10.4 Waste Splitting Activities (continued)

Assay Personnel

[5] **PERFORM** a radiological assay of the material in the east daughter drum in accordance with an approved procedure.

Waste Handling Technician

[6] **IF** the assay is higher than desired,
THEN:

[A] **LIFT** the metal bucket out of the east daughter drum.

[B] **REMOVE** some of the metal bucket contents.

[C] **GO** to Step 10.4[4].

[7] **LIFT** the metal bucket out of the east daughter drum.

NOTE *Waste placed into daughter drums or Pipe Overpack Containers (POCs) must be from a single parent drum.*

[8] **PLACE** the waste material into the west daughter drum (farthest from airlock)

[9] **REPEAT** Steps 10.4[1] through 10.4[8] until the desired radiological assay value is reached in the west daughter drum (farthest from airlock).

NOTE *The following step may be performed out of sequence.*

[10] **DETERMINE** the level of waste placed into the daughter drums, and **RECORD** the Daughter Drum % Full value (%) on Attachment 1.

[11] **BAG OFF** the west daughter drum (farthest from airlock) in accordance with Section 8.2, Bag Off Daughter Drum.

NOTE *Steps 10.4[12] and 10.4[13] may be performed in any order or concurrently.*

[12] **BAG ON** a new-west daughter drum (farthest from airlock) in accordance with Section 8.1, Bag On Daughter Drum, Bagport, or Gloveport.

10.4 Waste Splitting Activities (continued)

[13] **REPEAT** Steps 10.4[1] through 10.4[12] until all material within the parent drum has been processed.

[14] **WHEN** assaying of waste at the WCG is complete,
THEN ENSURE that the assaying equipment is removed from the WCG Exclusion Zone.

[15] **IF** all of the waste in the parent drum has **NOT** been dispositioned,
THEN GO to the appropriate sub-section to complete processing the remaining waste.

[16] **GO** to Section 11.1, Disposition.

10.5 Repackaging Activities

Waste Operator

[1] **REMOVE** waste items from the parent drum.

NOTE *Waste placed into daughter drums or Pipe Overpack Containers (POCs) must be from a single parent drum.*

[2] **PLACE** the waste items into a daughter drum.

[3] **DOCUMENT** any waste added during the processing of waste from a parent drum on Attachment 1.

NOTE *The following step may be performed out of sequence.*

[4] **DETERMINE** the level of waste placed into the daughter drums, and **RECORD** the Daughter Drum % Full value (%) on Attachment 1.

[5] **BAG OFF** the parent and daughter drums from the WCG in accordance with Section 7.2, Parent Drum Bag Off; and Section 8.2, Bag Off Daughter Drum.

[6] **IF** all the waste in the parent drum has **NOT** been dispositioned,
THEN GO to the appropriate sub-section in this procedure to complete processing of the remaining waste.

[7] **GO** to Section 11.1, Disposition.

10.6 Processing Nitrate Salt Drums

The following sub-section provides instructions for the disposition of Nitrate Salt drums that require the waste material to be mixed with absorbent material. Unless otherwise directed by supervision the minimum ratio of absorbent to Nitrate Salt is 3-parts absorbent to 1-part Nitrate Salt.

[1] **REMOVE** the waste items from the parent drum.

[2] **DOCUMENT** any waste items from the parent drum added to the daughter drum during the waste processing on Attachment 1.

[3] **ENSURE** that an organic absorbent (Kitty Litter/Zeolite® absorbent) is added to the waste material at a minimum ratio of 3-parts absorbent to 1-part waste or at a ratio as directed by supervision.

[4] **ENSURE** absorbent (Kitty Litter/Zeolite® absorbent) is thoroughly mixed with the Nitrate Salt material.

[5] **IF** the measured radiation level of the absorbent/Nitrate Salt mixture is greater than 190 mrem/hr,
AND multiple attempts to reduce the radiation level by splitting the absorbent/Nitrate Salt mixture have been attempted or directed by supervision,
THEN GO to Section 10.2, Waste Material Greater Than 190 mrem/hr.

[6] **IF** the measured radiation level of the absorbent/Nitrate Salt mixture is greater than 190 mrem/hr,
THEN:

[A] **SPLIT** the absorbent/Nitrate Salt mixture.

[B] **REPEAT** Steps 10.6[3] through 10.6[5] for each portion of the absorbent/Nitrate Salt mixture.

[7] **PLACE** process waste into daughter drum.

[8] **REPEAT** Steps 10.6[1] through 10.6[7] for all Nitrate Salt processing.

[9] **REMEDIATE** the contents of the parent drum for other items as applicable.

10.6 Processing Nitrate Salt Drums (continued)

NOTE *Absorbent waste containers that are categorized, as Nitrate Salts will generate additional daughter drums due to the amount of absorbent required to solidify the waste.*

[10] **DETERMINE** the level of waste placed into the daughter drums, and **RECORD** the Daughter Drum % Full value (%) on Attachment 1.

[11] **BAG OFF** the parent and daughter drums from the WCG in accordance with Section 7.2, Parent Drum Bag Off; and Section 8.2, Bag Off Daughter Drum.

[12] **CLOSE** the daughter drum in accordance with EP-WCRR-WO-DOP-0221, Preparing and Closing 55-Gallon Daughter Drum Assemblies.

11. POST-PERFORMANCE ACTIVITY

11.1 Disposition

Waste Handling Technician

[1] **SIGN** and **DATE** the applicable attachments.

Cognizant System Engineer

[2] **IF** UNSAT was checked on Attachment 4,
THEN:

[A] **PERFORM** an Immediate Operability Determination (IOD) in conjunction with the SOM in accordance with AP-341-516, Operability Determination and Functionality Assessment.

[B] **IF** the IOD is that the Structure, System, and Component (SSC) is operable, **AND** information is available that could change the outcome of the IOD, **THEN PERFORM** an Prompt Operability Determination for the deficiency in accordance with AP-341-516.

[C] **NOTIFY** the applicable Operations Center and SOM of the operability determination, as applicable.

[D] **PRINT, SIGN, Z number** and **DATE** Attachment 4.

SOS or designee

[3] **IF** a Fire Watch was stationed,
THEN ENSURE all INVENTORY is in a safe configuration, and **SECURE** the Fire Watch, and **CHECK** (√) YES or NO on Attachment 1.

[4] **IF** Section 10 was performed,
THEN ENSURE that the WCATS desktop application WCRR-REMED has been completed and the all-in-one labels generated and applied in accordance with EP-DIV-DOP-20043.

[5] **REVIEW** the applicable attachments for accuracy and completeness.

[6] **IF** any discrepancies are identified,
THEN RESOLVE the discrepancies with the original surveillant to correct the documentation.

11.1 Disposition (continued)

[7] **IF** Attachment 4 was completed,
THEN:

[A] **CHECK** (√) YES or NO to indicate whether the applicable acceptance criteria is satisfied on Attachment 4.

[B] **IF** the applicable acceptance criteria is **NOT** satisfied,
THEN:

[a] **ENSURE** that the applicable TSR actions have been implemented.

[b] **ENSURE** that the actions of EP-DIV-AP-13, EWMO TSR-Related Operational Limits Actions Compliance Tracking, have been implemented.

[c] **ENSURE** that the WCRRF Operations Center, SOM and EWMO Facility Operations Director (FOD) have been notified of the discrepancy.

[8] **PRINT, SIGN,** and **RECORD** Z#, Date/Time on the applicable attachments.

[9] **FORWARD** the applicable attachments to the WCRRF Operations Center.

[10] **ENSURE** that the Administrative Control Lock Log Sheet form, lock and key are returned to WCRRF Operation Center.

[11] **IF** a prohibited item collection drum was brought into TA-50-69,
AND waste processing is complete,
THEN ENSURE that the prohibited item collection drum is moved out of TA-50-69.

NOTE *Completing a Post-Job Review may be accomplished using the applicable P300 form or online (the preferred method since the institution has access to feedback and lessons learned http://int.lanl.gov/safety/iwmc/ [Click on the Submit IWD Part 4, Post-Job Review]).*

[12] **IF** any of the following occur:
- A new activity was completed for the first time
- A request was made by anyone involved with the performance of this procedure to perform a post-job review
- An abnormal event occurred
- A revision to an existing procedure was issued and it has been determined by the procedure owner or designee that a Post-Job Review is required

THEN PERFORM a Post-Job Review in accordance with P300.

11.1 Disposition (continued)

[13] **IF** the Post-Job Review identified any necessary changes to this procedure, **THEN INITIATE** a revision to this procedure.

11.2 Records Processing

Waste Handling Technician or Supervision

[1] Disposition records in accordance with the following:

Record Identification	Record Type Determination	Protection/Storage Method	Processing Instructions
Appendix 1. WCRRF P101-25, Attachment B Drum Lift Pre-Engineered Critical Lift Plan, Attachment 1, WCRRF WCG Waste Processing Data Sheet Attachment 2, WCRRF WCG Drum Lift Inspection Data Sheet Attachment 3, WCRRF WCG Breaching (Opening) Unvented, Sealed Waste Packages Checklist Attachment 4, WCRRF WCG Breaching (Opening) Metal 5- to 30 gal Unvented, Sealed Waste Package Surveillance Attachment 5, WCRRF Prohibited Item Collection Drum Data Sheet	Quality Assurance (QA) Record	Supervision **SHALL** implement a reasonable level of protection to prevent loss and degradation. Records should be maintained in a one-hour fire rated metal file cabinet when not in use. The instructions in this section may vary depending on the record such as some records may be retained in an Operations Center for a period of time (e.g., 1 year) in order to provide trending data or evidence of compliance.	When the records are ready for final disposition, the record is transferred to Records Management in accordance with EP-DIR-AP-10003, Records Management Procedure For ADEP Employees.

12. REFERENCES

ABD-WFM-006, Technical Safety Requirements (TSRs) for Waste Characterization, Reduction, and Repackaging Facility (WCRRF)

AP-341-516, Operability Determination and Functionality Assessment

CCP-TP-113, CCP Standard Waste Visual Examination

CH-TRAMPAC, Contact Handled – Transuranic Waste Authorized Methods for Payload Control

DOE/WIPP-02-3122, Transuranic Waste Acceptance Criteria For Waste Isolation Pilot Plant

EP-DIV-AP-0112, EWMO Pre-Job Briefings

EP-DIV-AP-13, EWMO TSR-Related Operational Limits Actions Compliance Tracking

EP-DIV-AP-20047, LTP Glovebox/Glovebag and Glove Safety Program

EP-DIV-AP-20098, LTP TRU Waste Remediation Safety Evaluation

EP-DIV-AP-0117, WDP Division Forms

EP-DIV-AP-0120, EWMO Watchbill Administration

EP-DIV-DOP-20043, LTP TRU Waste Container Labeling

EP-DIV-POLICY-20057, EWMO Health and Safety Policy-Manual Movement

EP-DIV-REPORT-09, Engineering Path Forward Report for CMR Wing 2 Containers

EP-DIR-AP-10003, Records Management Procedure For ADEP Employees

EP-WCRR-FO-DOP-0201, WCRRF and Building TA-50-69 TSR Mode Change

EP-WCRR-RM-AOP-0208, Special Shapes

12. REFERENCES (continued)

EP-WCRR-WO-DOP-0221, Preparing and Closing 55-gal Daughter Drum Assemblies

EP-WCRR-WO-DOP-0236, WCRRF Loading/Unloading SWB or 85-gal Drum

EP-WCRR-WO-DOP-0239, Verifying WCRRF Scales

EWMO-DO-07-042, Memo. Dtd. Jul 6 ,2007, WCRRF Pu-238 Glovebag Issue

Form 1489, Pre-Operational Inspection Record for Overhead Cranes and Hoists

P101-18, Procedure for Pause/Stop Work

P101-25, Cranes, Hoists, Lifting Devices, and Rigging Equipment

P330-6, Nonconformance Reporting

APPENDIX 1

Page 1 of 10

WCRRF DRUM LIFT CRITICAL LIFT PLAN (P101-25 Attachment B)

Table B-1. LANL Critical Lift Plan for Pre-Engineering Production Lift	
Name and company of person preparing this plan: LANS	
Date prepared: 1-31-2014	Date of lift:
Critical lift plan expiration date: N/A	PIC:
Client/customer: DOE/WIPP	Job #: N/A Project #: N/A
Lift location (building #, address, etc.): WCRRF, TA-50-69	This critical lift plan must be available when and where the lift is performed. How will this requirement be met? Kept on file in the WCRRF Operations Center.

A. Critical Lift Determination	
A lift will be determined critical if any of the following conditions are met. Check each answer with either a Yes or a No.	
1. If the load item were damaged or upset would it result in a release into the environment of radioactive or hazardous material exceeding the established permissible environmental limits?	Yes _____ No ✓
2. Is the load item unique and, if damaged, would it be irreplaceable or not repairable and is it vital to a system, facility or project operation?	Yes _____ No ✓
3. If the load item was damaged, would the cost to replace or repair the load item, or the delay in operations of having the load item damaged have a negative impact on facility, organizational, or DOE budgets to the extent that it would affect program commitments?	Yes _____ No ✓
4. If the load were mishandled or dropped, would the event cause any of the above noted consequences to nearby installations or facilities?	Yes _____ No ✓
5. Does the lift exceed 75% of the manufacturer's rated capacity for the crane, hoist, or mechanized equipment to be used in the lift?	Yes ✓ No _____
6. Does the load item require special care in handling because of weight, size, asymmetrical shape, undetermined center of gravity, installation tolerances, or other unusual factors?	Yes _____ No ✓
7. Is the lift an otherwise non-critical lift that must be made in close proximity to critical or expensive items that could be damaged as a result of contact with a hoisted load?	Yes _____ No ✓
8. Does the lift use two or more cranes, hoists, pieces of mechanized equipment, or a combination of such equipment?	Yes _____ No ✓
9. Is the lift such that the crane, hoist, or mechanized equipment could at any time come in contact with an energized high voltage power line?	Yes _____ No ✓
10. Could failure of this lift significantly impact the confidence of LANL customers or sponsors in the ability of LANL to safely execute current or future missions?	Yes _____ No ✓

APPENDIX 1

Page 2 of 10

Table B-1. LANL Critical Lift Plan (Cont.)

B. Pre-lift Checklist (Completed prior to each lift)

__ Crane's monthly and annual inspections current
__ Periodic maintenance complete
__ Crane inspected __ Site-control in-place
__ Load test verified __ Spotters in-place
__ Operator is qualified __ Signal person identified
__ Riggers are qualified __ Head-height checked
__ Rigging proof tested __ Hoist-height checked
__ Proof tests verified __ Signatures procured
__ Rigging inspected __ Tailing info provided
__ Annual rig. Insp. current __ Job briefing held
__ Work zones identified __ Team is ready for lift

C. Personnel & Environmental Exposure

1. Any radiation exposure hazards? Yes
2. Any chemical exposure hazards? Yes
3. Any explosive hazards? No
4. Any exposure hazards to the public? No

If YES to any of the above, what precautions are needed?
1. RWP
2. IWD

5. Is EM&R notification required? No
When? N/A
Where? N/A
Who? N/A

D. Load Identification and Information

1. Load condition: ____ New ___ Used ✓ N/A
2. Wt. empty: N/A
3. Wt. of contents: N/A
4. Wt. of lifting beam: N/A
5. Wt. of rigging: N/A
6. Wt. of excess load material: N/A
7. Wt. of temporary lift frames: N/A
8. Total weight: ≥ 468 lb ≤ 624 lb
9. Source of load weight information: _____
WCRRF drum scale _____
(drawings, calculations, dynamometers, etc.)
10. Page on drawing: N/A
11. Revision #: N/A Revision date: N/A
12. Center of gravity has been identified: N/A
13. Dimensions: Standard 55-gal drum
14. Location and type of lift points are shown:
See attached figure

E. Operating Equipment to be Used

1. Crane mfg. and model: Drum Lift: LANL Designed and Built
2. Crane S/N: N/A ID-No: Drum -01
3. Crane capacity: 624 lb
4. Trolley/travel restrictions: N/A
5. Load is what percent of crane capacity? 75-100 %
6. Are any crane, hoist, and equipment load charts required for this lift? Y____N✓
Are they available to the operator?
Y____N____ N/A✓

APPENDIX 1

Page 3 of 10

Table B-1. LANL Critical Lift Plan (Cont.)	
F. Rigging	**I. Sketches & Drawings**
1.Hitch type(s): N/A	In accordance with DOE-STD-1090-2007, *Hoisting and Rigging Standard,* rigging sketches must include--as applicable:
2. Sling type: WR ___ FW ___ RS __ Chain ___ (If more than one, write the number of each type on the appropriate line) N/A	1. Identification and rated capacity of slings, lifting bars, rigging accessories, and below-the-hook lifting devices. N/A
3. Number of slings: N/A	2. Load-indicating devices. N/A
4. Size: N/A	3. Load vectors (Sling Tension). N/A
5. Shackle sizes: N/A	4. Lifting points. N/A
6. Shackle rated capacity: N/A tons	5. Sling angles N/A
7. Sling assembly rated capacity: N/A lbs.	6. Boom and swing angles N/A
8. Shackle secured to load by: N/A	7. Methods of attachment. N/A
9. Shackle & lifting lug mating are OK? N/A	8. Crane orientations. N/A
10. Temporary lift frames & weights: N/A	9. Other factors affecting equipment capacity, such as load path sketch, key point heights, floor or soil bearing capacity, etc. Yes
11. Supports & load grillages shown? N/A	10. Calculate and provide the rated capacity of equipment in the configuration in which it will be used. Yes Make sure that these items are included at a minimum.
G. Operating Area	**J. Notes/Things To Do**
1. Are obstructions present? No 2. Are clearance issues present? No 3. Is the lift area populated? No 4. Action items for 1, 2, & 3: Drawing provided	N/A
H. Practice Lift Required?	
1. Describe the lift N/A	
2. Team members involved in the practice lift must be those who will be involved in the actual lift. Are all of those members present? N/A	

APPENDIX 1

Page 4 of 10

Table B-1. LANL Critical Lift Plan (Cont.)

K. Personnel Assignments
List names of all persons involved in the lift and identify their roles (Operator, Signaler, Person In Charge [PIC], etc.). All must be qualified.

Name	Z Number	Role	Training Verified		Comments/Notes
			Y	N	
			Y	N	
			Y	N	
			Y	N	
			Y	N	
			Y	N	
			Y	N	

L. Review and Approval. List all that apply. (Must include the PIC and one other qualified person at a minimum and may include the health and safety rep., Responsible Line Manager [RLM], First Line Manager [FLM], responsible oversight org. rep., quality assurance rep., or others as required)

	Z Number	Organization	Concurrence / Approver's Signature
Responsible Line Manager		LTP-DDP	/s/John Guadagnoli /Randy Axtell
Crane Program SME	219935	OSH-ISH	/s/Clay Davis
IHS SME	120199	DSESH-EWMO	/s/Robert Gardner Winkle
CSE	233208	ES-EWMO	/s/Shawn West
PIC 1 (Qualified Crane Operator)	240092	WCRRF LTP DDP	/s/Clayton Mullins
Operator	240092	WCRRF LTP DDP	/s/Joe Quintana
WCRRF SOS	240092	WCRRF LTP DDP	/s/Clayton Mullins

APPENDIX 1

Page 5 of 10

M. Pre-lift Meeting					
Name	**Z Number**	**Signature**	**Name**	**Z Number**	**Signature**

APPENDIX 1

Page 6 of 10

Load Schematic & Rigging Method

Load Schematic & Rigging Method

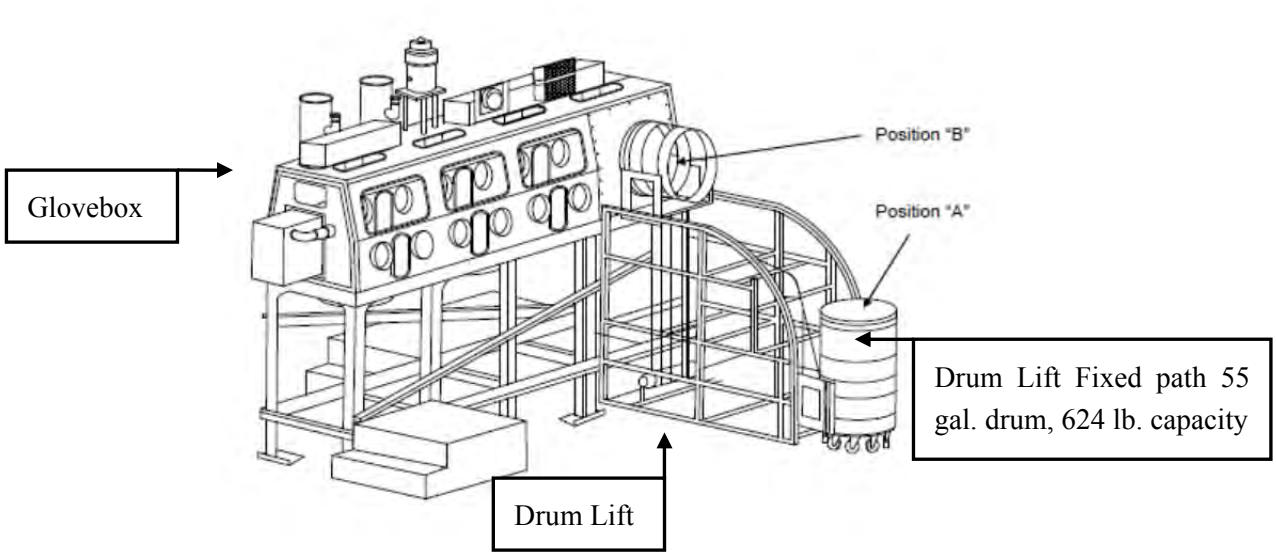

APPENDIX 1
Page 7 of 10

Load Travel Path/Personnel Placement

See Load Handling Sequence and Procedures

APPENDIX 1
Page 8 of 10

Load Handling Sequence & Procedures

Purpose

This critical lift plan is used for loading degraded or loss of integrity drums or drums that satisfy the critical lift requirements of P101-25 with the WCG Drum Lift as required by ABD-WFM-006, Technical Safety Requirements (TSRs) for Waste Characterization, Reduction, and Repackaging Facility (WCRRF). This critical lift plan must be used to lift and lower degraded drums with waste material using the WCG Drum Lift. This plan will be used to handle and prepare waste drums at Area-G and at WCRRF for a critical lift.

General Guidelines/Notes

This critical lift plan has been prepared in accordance with P101-25, Cranes, Hoists, Lifting Devices, and Rigging Equipment.
Drum handling operations involving degraded/loss of integrity drums or drums that satisfy the requirements for a critical lift in accordance with P101-25 (e.g., drums weighing greater than 468 lb) at WCRRF are performed using approved procedures and lifting equipment specifically designed for this operation.
The following information **SHALL** be reviewed during the critical lift pre-job brief:

1. All lifting and signaling **SHALL** be performed by a qualified operator. Supervision will be by a designated Qualified Crane Operator and Rigger Person-In-Charge (PIC) and documented on the WCRRF WCG Critical Lift Plan Concurrence Sheet.
2. The WCG Drum Lift and drums **SHALL** be visually inspected by the operator and/or qualified PIC. Any noted substandard item **SHALL** be cause for suspending operations until an acceptable replacement is acquired.
3. The rigging procedure **SHALL** be followed. Where changes are required due to site conditions, the changes **SHALL** be reviewed and approved by the Qualified Crane Operator and Rigger PIC.
4. The weight of the load **SHALL** include the 55 gal drum and lead blankets (if used for shielding purposes). In no case should the lift exceed 624 lb.
5. Communications between the WCG pendant operator and PIC **SHALL** be clear and unobstructed. The primary system **SHALL** be voice communications. Only designated, qualified signalers **SHALL** give signals to the operator. However, the operator **SHALL** obey a stop signal at all times, no matter who gives the signal.
6. <u>A pre-lift meeting with all responsible persons **SHALL** be held before the lifts and each person **SHALL** be assigned specific duties and sign the pre-job sheet.</u>
7. The equipment to be used for this lift will be as applicable: WCG Drum Lift.

APPENDIX 1

Page 9 of 10

Project Notes and Specifications

1. The primary goal is to perform a safe lift in a timely manner.
2. This lift has been frequently performed with equipment stated in this plan. A preliminary lift is not required but if any discrepancies are noted during the lift, the project **SHALL** be stopped and re-evaluated by the Qualified Operator, and Qualified Crane Operator and Rigger PIC.
3. The drum **SHALL** be positioned secured in the WCG Drum Lift to facilitate SAFE and efficient operation. The drum lift pendant operator **SHALL** announce operation of the lift before commencing raising/lowering of the drum and all personnel **SHALL** stand clear and to the side of drum movement. The work area for assembling the payload **SHALL** be limited to personnel necessary for the operation. (Example: Operator, signal personnel, PIC, and RCTs.)
4. The lift requires understanding by the entire crew. This lift plan **SHALL** be thoroughly reviewed by the personnel performing the lift and the Critical Lift / Pre-Lift Meeting **SHALL** be conducted before the lift to ensure that all personnel are aware of their assigned duties. Each person involved in the lift must attend the meeting and sign the attendance sheet.

Competent Person / Lift Supervisor

The responsible person for this lift is the designated Qualified Crane Operator and Rigger PIC.

Emergency Action Plan

1. In the event that an emergency occurs, all operations **SHALL** be discontinued and any raised load **SHALL** be lowered/secured, if possible. For specific casualties, operators will also perform required actions of applicable procedures in the WCRRF Response Manual.
2. Each portion of the lift presents a slightly different set of variables as related to a direction and area where the components may be set down temporarily during an emergency.
3. During the pre-lift meeting the operators, riggers, and spotter are to specifically discuss emergency actions at various points during the lift. If the raised load has to be secured the operator will do so and contact the RCT and Qualified Crane Operator and Rigger PIC. All non-essential personnel are to be kept clear of the lift area.
4. The operator and rigging personnel will not resume the lift operations without approval from the RCT and the Qualified Crane Operator and Rigger PIC.
5. In the event of an equipment malfunction and the drum cannot be lowered/secured:
   - The operation will be placed in a safe configuration.
   - The waste will be unloaded from the drum and the drum will be manually removed from the drum lift, if possible, or the CSE will be notified for the applicable actions.

APPENDIX 1

Page 10 of 10

Hazard Assessment

This lift has been reviewed in great detail to ensure a safe lift and minimize hazards. The following items have been identified as unique for this lift.

In no case **SHALL** material being lifted weigh more than 624 lb. (drum + lead shielding).

Test Lift—A test lift is not required for this operation.

Travel Path—At the pre-job/lift briefing a spotter(s) **SHALL** be designated to observe the load along the entire travel path (consider slopes and uneven surfaces).

Overhead Instructions—The Qualified Crane Operator and Rigger PIC and rigging crew **SHALL** physically verify the travel path is clear of overhead obstructions before beginning the lift.

Working Around the Load (Cone of Safety) - Absolutely NO ONE **SHALL** be under the load, or while it is being raised, lowered, or moved. The Qualified Crane Operator and Rigger PIC **SHALL** ensure that the area (in front of the WCG Drum Lift) is clear of non-essential personnel. Specific placement of operators and RCTs **SHALL** be established during the pre-lift meeting.

Securing the Drum Lifting Assembly—The rigging crew s **SHALL** inspect the WCG Drum Lift before lifting a drum.

Equipment List

Ensure the following equipment is present, has undergone physical inspection, is properly calibrated and is ready to support the critical lift steps:

- WCG Drum Lift

Work Steps for Loading a 55 Gallon Drum Using the WCG Drum Lift

Step 1 Verify the drums weighs less than 624 lb.

Step 2 Obtain key from key box, Insert key, and turn on the power to the drum lift.

Step 3 Using the drum lift pendent, lower the drum lift to the lower limit switch or until the bellyband of the lift cradle can grasp the drum evenly.

Step 4 Position the drum on the drum lift with the drum bolt ring accessible for lid removal when inside the glovebox.

Step 5 Close and secure the bellyband, ensuring the bag-off sleeve does not get caught on the bellyband.

Step 6 Raise the drum to the horizontal port and stop, leaving an adequate gap (approximately 12 inches) to mount the bag-off sleeve to the horizontal port.

Step 7 Bag on the parent drum in accordance with this procedure.

Step 8 Turn off the power to the drum lift, remove key, and place in key box.

APPENDIX 2

Page 1 of 1

WCRRF ALLOWED CONTAINER TYPES FOR REMEDIATION

The following "allowed" container types may be remediated in the WCRRF glovebox because there is no concern for hydrogen buildup within the container:

- Containers without a gasket (e.g. containers with slip lids, paint cans, "produce cans" and other similar containers) of any size
- Containers of any size with slip-on lids (with or without a gasket)
- Empty containers of any size
- Fiber board containers of any size
- Sealed containers of any size not containing TRU waste or free liquids
- Any containers with a volume < (less than) 4 liters
- Unvented 5- to 30-gal waste packages

APPENDIX 3
Page 1 of 1

EXAMPLE PREOPERATIONAL INSPECTION RECORD FOR OVERHEAD CRANES AND HOISTS

NOTE: Use these buttons to print or save the form, DO NOT use the browser tool bar. SAVE PRINT

Form 1489

Los Alamos NATIONAL LABORATORY EST. 1943

Preoperational Inspection Record for Overhead Cranes and Hoists

Inspector	Date Inspected	Location
Manufacturer and Type		Serial Number and Rated Capacity

Current Inspections

- Current Annual ANSI/OSHA Inspection Date: _____
- Current Annual Mechanical and Electrical (*if applicable*) PM's Date: _____
- Current Monthly Inspection Date: _____

Main or Auxiliary Hoist Rope			
• Is there any distortion such as kinking, crushing, unstranding, bird-caging, heat damage, or core protrusion?	☐ Yes	☐ No	☐ N/A
• Are there six randomly distorted broken wires per rope lay or three broken wires per strand per rope lay?	☐ Yes	☐ No	☐ N/A
• Is there wear of 1/3 the original diameter of outside individual wires?	☐ Yes	☐ No	☐ N/A
Load Chain			
• Is there elongation or distortion?	☐ Yes	☐ No	☒ N/A
• Any twisting, corrosion, pitting, or discoloration?	☐ Yes	☐ No	☒ N/A
• Any gouges, nicks, or weld splatter?	☐ Yes	☐ No	☒ N/A
Spooling, Reeving			
• Is there cross-winding?	☐ Yes	☐ No	☐ N/A
• Are the rope stays together and in alignment?	☐ Yes	☐ No	☐ N/A
• Is there any double winding or overwinding?	☐ Yes	☐ No	☐ N/A
• Is there minimum of two wraps at lowest position?	☐ Yes	☐ No	☐ N/A
Anchoring			
• Anchoring secured or installed in accordance with manufacturer's recommendations?	☐ Yes	☐ No	☐ N/A
• Is there minimum of two wire rope clips?	☐ Yes	☐ No	☒ N/A
Main or Auxiliary Hook			
• Is the throat opening not greater than 15% of normal?	☐ Yes	☐ No	☒ N/A
• Is there less than ten-degree twist out of plane?	☐ Yes	☐ No	☒ N/A
• Any deformities or cracks?	☐ Yes	☐ No	☒ N/A
• Are the safety latches present and functional?	☐ Yes	☐ No	☒ N/A
Markings			
• Are the rated capacities conspicuously posted?	☐ Yes	☐ No	☐ N/A
• Are the controllers properly marked? Are remote crane controllers affixed a label which contains the following information? (crane manufacturer, location, and other information specific to the unit being operated) _____	☐ Yes	☐ No	☐ N/A
• Is the main disconnect properly marked?	☐ Yes	☐ No	☐ N/A
Are the items listed functional?			
• Brakes	☐ Yes	☐ No	☐ N/A
• Controllers	☐ Yes	☐ No	☐ N/A
• Limit switches	☐ Yes	☐ No	☐ N/A
• Lights, warning devices	☐ Yes	☐ No	☒ N/A
• Trolley	☐ Yes	☐ No	☐ N/A
• Bridge	☐ Yes	☐ No	☒ N/A
• Main or auxiliary load	☐ Yes	☐ No	☐ N/A

Remarks:

Form 1489 (12/10)

EXAMPLE

APPENDIX 4
Page 1 of 1

VOLUMES OF CYLINDRICAL INNER CONTAINERS NEAR 4 LITERS

Diameter		Height		Volume (liters)
3”	7.6 cm	12”	30.5 cm	< 4
3”	7.6 cm	18”	45.7 cm	< 4
4”	10.7 cm	12”	30.5 cm	< 4
4”	10.7 cm	18”	45.7 cm	> 4
4.5”	11.4 cm	12”	30.5 cm	< 4
4.5”	11.4 cm	14”	35.6 cm	< 4
4.5”	11.4 cm	16”	40.6 cm	> 4
4.5”	11.4 cm	18”	45.7 cm	> 4
5”	12.7 cm	8”	20.3 cm	< 4
5”	12.7 cm	10”	24.5 cm	< 4
5”	12.7 cm	12”	30.5 cm	> 4
5”	12.7 cm	14”	35.6 cm	> 4
5.5”	14 cm	8”	20.3 cm	< 4
5.5”	14 cm	10”	24.5 cm	> 4
5.5”	14 cm	12”	30.5 cm	> 4
6”	15.2 cm	8”	20.3 cm	> 4
6”	15.2 cm	10”	24.5 cm	> 4
6.5”	16.5 cm	8”	20.3 cm	> 4
7”	17.8 cm	6.5”	16.5 cm	> 4

<4 = less than 4 liters and does <u>not</u> require remediation

> 4 = greater than 4 liters and requires remediation

APPENDIX 5
Page 1 of 1

FLOWCHART FOR PROCESSING OF HIGH DOSE ITEMS OF MIXED MATERIAL TYPES

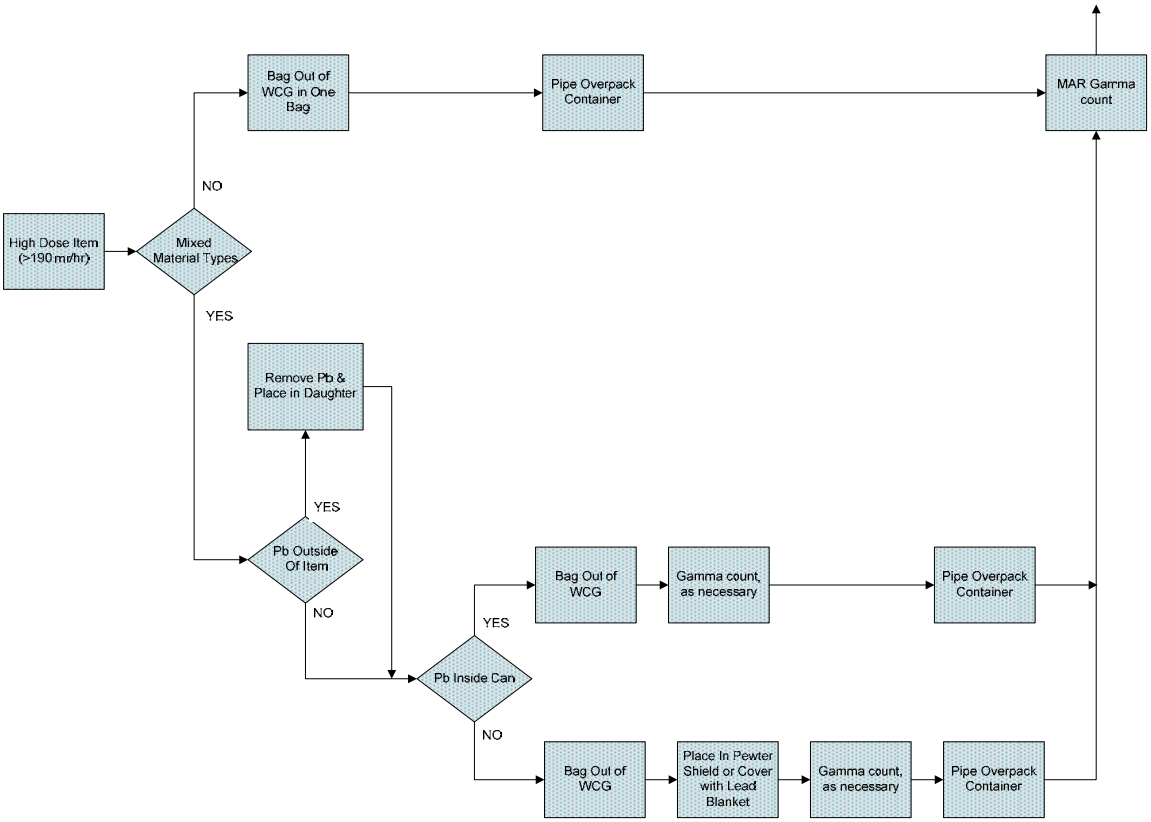

APPENDIX 6
Page 1 of 1

ADMINISTRATIVE CONTROL LOCK LOG SHEET

(Used when needed to track component manipulation)

NOTE: Refer to P315, Conduct of Operations Manual, Attachment 8, Section 8.1.5, for additional guidance.

Facility/Location: _____

Component No.	Authorized By (Shift Mgr.)	New Position	Positioned By	Verified By	Date/ Time	Restored By	Verified By	Date/ Time	Authorized By (Shift Mgr.)

APPENDIX 7

Page 1 of 1

MANUAL DRUM MOVEMENT SPECIAL INSTRUCTIONS

NOTE 1 *The following requirements below have been pre-approved in accordance with EP-DIV-Policy-20057, EWMO Health and Safety Policy.*

NOTE 2 *Any manual drum movement modifications or new scenario that may arise **SHALL** be performed in accordance with EP-DIV-Policy-20057.*

Manual Drum Movements within Transportainers:

- Two-person rule and a drum dolly chock to slide drums to and from the drum dolly and spill pallets
- Two-person rule to slide drums from one pallet to another
- Two-person rule to slide drums on the floor

Manual Drum movements to and from Scale:

- Mechanical means only

Manual Drum Movements between the 50-69 RBA and the CA

- Mechanical means
- Empty POCs mechanical mean only
- Empty 55 and 85s from pallet to dolly or dolly to pallet using two-person rule with a dolly chock

Manual Drum Movements to center of Scale

- Utilize mechanical means (e.g., drum grabber or versa lift)
- Two-person rule to slide drum to and from the center of the scale

Manual Movement of Drums onto Lift Table under the WCG

- Utilize versa lift, (if available) otherwise implement two-person rule to slide drum to and from the drum dolly and lift table with metatarsal guards

Manual Movement of Drums in Transport Vehicle for Receipt Inspection and Unloading

- Two-person rule to slide drums

ATTACHMENT 1
Page 1 of 4

WCRRF WCG WASTE PROCESSING DATA SHEET

4.1[6][B] Parent Waste Container No.: _____

6.2[4] Date Processed: _____

4.1[6][B] Prohibited Items:
☐ Sealed Containers > 4L ☐ Liquids ☐ Pressurized Containers ☐ N/A

4.1[6][B] Parent Waste Container RCRA Designations: _____

4.3[1]/4.3[2] **($)** TA-50-69 is in the OPERATION or WARM STANDBY MODE (TSR 1.2) ☐ OPERATIONS ☐ WARM STANDBY

4.3[4][B] Platform Scale: Equipment No.: _____
Cal. Due Date: _____

4.3[5][B] **($)** Three 1-Liter containers carbon spheroids or MET-L-X _____ (Initial and Date)
in WCG: (SAC 5.10.1.7.1)

4.3[6] **($)** Stationary Fire Watch has been established: ☐ N/A
(> 300 PE-Ci Equivalent Combustible) _____ (Initial and Date)
(SAC 5.10.1.7.2)

4.3[7 [A] Parent Waste Container degraded, loss of integrity,
or weighs greater than 468 lb but less than or equal to 624 lb:
☐ YES ☐ NO ☐ N/A

4.3[8][D] WCG glove and bag-in/bag-out bag inspection: ☐ SAT ☐ UNSAT ☐ N/A

Performed By: _____ / _____ / _____ / _____
Waste Handling Tech (print) Signature Z # Date

ATTACHMENT 1
Page 2 of 4

4.1[6][B] Parent Waste Container No.: _____

5.[18] Prepared Parent Drum Weight (lb) including items secured to drum top, as applicable: _____ lb

6.2[5][A] Parent Drum Lead Blanket Weight (lb): _____ lb ☐ N/A

6.2[5][B]/ 6.2[6] Total Parent Drum Weight (lb) _____ lb

6.2[7] **($)** Total Parent Drum Weight < 624 lb (SR 4.5.1): ☐ SAT ☐ UNSAT

6.2[16] Retaining clips in place ☐ SAT ☐ UNSAT

6.2[18][D] Drum lift hinge pin retaining clip replaced._____/_____/_____ ☐N/A
Initials Z# Date

6.2[26] Approval to leave a parent drum attached to the WCG overnight:

_____/_____/_____/_____
EWMO-FOD (print) Signature Z # Date

ATTACHMENT 1
Page 3 of 4

4.1[6][B] Parent Waste Container No.: _____

Daughter Drums					
10.1[4]/10.2[4]	Daughter Drum No.				
10.1[4]	Daughter Drum Filter No.				
10.1[4]	Daughter Drum Bag Filter No.				
10.1[4]	Daughter Drum Purchase Order No.				
10.1[13][C]	WCG Fire Watch Stationed	☐ YES		☐ NO	☐ N/A
10.1[14][C][d]3/11.1[3]	WCG Fire Watch Secured	☐ YES		☐ NO	☐ N/A
10.2[4]	POC bag-on bag: Manufacturer				
	Model No.				
	Serial No.				
	Date of Manufacture				
10.2[5]	POC ID No				
10.2[6]/10.2[7][B]	POC Item Description				
10.2[13]	POC Assembly closed per Manufacturer's instructions. (Initial and Z#)				
10.2[14]	POC Assembly Gross Weight (lb)				
10.2[15]	POC Rad. Survey Results (mrem/hr)				
10.3[3][A]	Approx. Containerized Liquid Vol./Units				
10.3[5][A]	Free Liquid Volume/Units				
10.3[7][A]	Opaque/Non-penetrable Item Description:				
10.3[9][A]	PCB-contaminated Waste Description				
10.3[9][B]	PCB Item ID No.				
10.3[10]	Remaining Waste Description				
10.3[13]/10.4[10]/ 10.5[4]/10.6[10]	Daughter Drum % Full (%)				
10.5[3]/10.6[2]	Description Waste Added During Processing				

ATTACHMENT 1
Page 4 of 4

4.1[6][B] Parent Waste Container No.: _____

Comments: _____

_____
_____
_____
_____
_____
_____
_____
_____

11.1[1] Performed By: _____ / _____ / _____ / _____
Waste Handling Tech (print) Signature Z # Date

11.1[8] Reviewed By: _____ / _____ / _____ / _____
SOS or designee (print) Signature Z # Date/Time

ATTACHMENT 2
Page 1 of 2

WCRRF WCG DRUM LIFT INSPECTION DATA SHEET

6.1[2] Inspection Date: _____

6.1[4] Previous number of shaft bolt threads exposed:
- Upper Pulley Bolt Threads visible: _____
- Middle Pulley Bolt Threads visible: _____
- Lower Pulley Bolt Threads visible: _____

6.1[5] Current number of threads exposed out the end of the shaft bolt locknut:
- Upper Pulley Bolt Threads visible: _____
- Middle Pulley Bolt Threads visible: _____
- Lower Pulley Bolt Threads visible: _____

6.1[6] Shaft bolt end is flush with or extends out of the outer end of the shaft bolt locknut
- Upper Pulley Bolt Threads visible: ☐ YES ☐ NO
- Middle Pulley Bolt Threads visible: ☐ YES ☐ NO
- Lower Pulley Bolt Threads visible: ☐ YES ☐ NO

6.1[7] Shaft bolts do not show any sign of wear between the shaft bolt and the support flange (e.g., shaft not perpendicular to the flange plate):
- Upper Pulley Assembly: ☐ SAT ☐ UNSAT
- Middle Pulley Assembly: ☐ SAT ☐ UNSAT
- Lower Pulley Assembly: ☐ SAT ☐ UNSAT

6.1[9] New upper wire rope damage observed: ☐ YES ☐ NO

TABLE 3-1, UPPER WIRE ROPE DAMAGE

Description of Wire Rope Damage (e.g., wire break, corrosion, or pinch) (6.1[3]/6.1[10])	Previously Identified Damage (√) (6.1[3])	Damage Location from Hoist Drum (inches) (6.1[10])	Distance from damage to nearest wire break (inches) (6.1[10])

ATTACHMENT 2
Page 2 of 2

6.1[2] Inspection Date: _____

6.1[12] New lower wire rope damage observed: ☐ YES ☐ NO

TABLE 3-2, LOWER WIRE ROPE DAMAGE

Description of Wire Rope Damage (e.g., wire break, corrosion, or pinch) (6.1[3]/6.1[13])	Previously Identified Damage (√) (6.1[3])	Damage Location from Hoist Drum (inches) (6.1[13])	Distance from damage to nearest wire break (inches) (6.1[13])

IPC-1

6.1[14][A]/ There are less than six randomly distributed broken wires in one rope lay or three broken wires in one strand in one rope lay.

6.1[15] ☐ SAT ☐ UNSAT

Comments: _____

6.1[16][B]/ 11.1[1] Performed By: _____ / _____ / _____ / _____
Operator (print) Signature Z # Date

11.1[8] Reviewed By: _____ / _____ / _____ / _____
SOS or designee (print) Signature Z # Date/Time

ATTACHMENT 3
Page 1 of 1

WCRRF WCG BREACHING (OPENING) UNVENTED, SEALED WASTE PACKAGES

10.1[10][A] Parent Drum Container ID: _____ Page _____ of _____

Unvented-Sealed Waste Package type: (10.1[10][B])	☐ Metal 5- to 30-gal ☐ Non-metallic 5- to 30-gal ☐ < 5 gal	☐ Metal 5- to 30-gal ☐ Non-metallic 5- to 30-gal ☐ < 5 gal	☐ Metal 5- to 30-gal ☐ Non-metallic 5- to 30-gal ☐ < 5 gal	☐ Metal 5- to 30-gal ☐ Non-metallic 5- to 30-gal ☐ < 5 gal
($) Non-spark producing tools available in WCG. (SAC 5.10.1.6.1) (10.1[10][C])	☐ YES ☐ NO			
($)WCG electrical receptacles de-energized and locked open/off. (SAC 5.10.1.6.2) (10.1[10][D])	☐ SAT ☐ UNSAT			
($) 5- to 30-gal waste package lid restraint inspected for degradation (e.g., no indication of cracked parts, missing fasteners, loose or frayed parts, excessive wear, or unusual deformation), and determined to be capable of restricting lid. (SAC 5.10.1.5.1) (10.1[11][A])	☐ SAT ☐ UNSAT ☐ N/A < 5 gal	☐ SAT ☐ UNSAT ☐ N/A < 5 gal	☐ SAT ☐ UNSAT ☐ N/A < 5 gal	☐ SAT ☐ UNSAT ☐ N/A < 5 gal
($) Waste package lid restraint attached to waste package and proper installation verified. (SAC 5.10.1.5.1) (10.1[11][B])	☐ SAT ☐ UNSAT ☐ N/A < 5 gal	☐ SAT ☐ UNSAT ☐ N/A < 5 gal	☐ SAT ☐ UNSAT ☐ N/A < 5 gal	☐ SAT ☐ UNSAT ☐ N/A < 5 gal
($) Time 5- to 30-gal lid and lid restraint removed from the waste package. (Start Time) (SAC 5.10.1.5.2) or SAC 5.10.1.6.3) (10.1[11][I])	_____ ☐ N/A < 5 gal	_____ ☐ N/A < 5 gal	_____ ☐ N/A < 5 gal	_____ ☐ N/A < 5 gal
($) Time since 5- to 30-gal lid and lid restraint removed from the waste package. (SAC 5.10.1.5.2) or SAC 5.10.1.6.3) (10.1[11][K])	_____ ☐ N/A < 5 gal	_____ ☐ N/A < 5 gal	_____ ☐ N/A < 5 gal	_____ ☐ N/A < 5 gal
($) Elapsed time since 5- to 30-gal lid and lid restraint removed from waste package is ≥ 30 minutes, and glovebox operations may resume and WCG electrical receptacles may be re-energized. (SAC 5.10.1.5.2) or SAC 5.10.1.6.3) (10.1[11][K])	☐ SAT ☐ UNSAT ☐ N/A < 5 gal	☐ SAT ☐ UNSAT ☐ N/A < 5 gal	☐ SAT ☐ UNSAT ☐ N/A < 5 gal	☐ SAT ☐ UNSAT ☐ N/A < 5 gal
($) Time < 5-gal lid removed from the waste package. (Start Time) (SAC 5.10.1.6.3) (10.1[12][B])	_____ ☐ N/A > 5 gal	_____ ☐ N/A > 5 gal	_____ ☐ N/A > 5 gal	_____ ☐ N/A > 5 gal
($) Time since < 5-gal lid removed from the waste package. (End Time) (SAC 5.10.1.6.3) (10.1[12][C][a])	_____ ☐ N/A > 5 gal	_____ ☐ N/A > 5 gal	_____ ☐ N/A > 5 gal	_____ ☐ N/A > 5 gal
($) Elapsed time since < 5-gal lid removed from waste package is ≥ 30 minutes, and WCG electrical receptacles may be re-energized. (SAC 5.10.1.6.3) (10.1[12][C][a])	☐ SAT ☐ UNSAT ☐ N/A > 5 gal	☐ SAT ☐ UNSAT ☐ N/A > 5 gal	☐ SAT ☐ UNSAT ☐ N/A > 5 gal	☐ SAT ☐ UNSAT ☐ N/A > 5 gal

Comments: _____

11.1[1] Performed By: _____ / _____ / _____ / _____
Operator (print) Signature Z # Date

11.1[8] Reviewed By: _____ / _____ / _____ / _____
SOS or designee (print) Signature Z # Date/Time

ATTACHMENT 4
Page 1 of 1

WCRRF WCG BREACHING (OPENING) 5- to 30-gal
METAL UNVENTED, SEALED WASTE PACKAGE SURVEILLANCE

10.1[10][E][a] Waste Container ID: _____

10.1[10][E][b] **($)** 55-gal parent drum containing an unvented-sealed METAL 5- to 30-gal waste package grounded to the WCG with a grounding strap that is firmly attached at all ends to clean-bare metal surfaces. (SR 4.6.1) ☐ SAT ☐ UNSAT

10.1[10][E][c] **VERIFY** that the grounding strap is attached ☐ SAT ☐ UNSAT

10.1[11][C] **($)** Unvented-sealed METAL 5- to 30-gal waste package grounded to the WCG with a grounding strap that is firmly attached at all ends to clean-bare metal surfaces. (SR 4.6.1) ☐ SAT ☐ UNSAT

10.1[11][D] **VERIFY** that the grounding strap is attached ☐ SAT ☐ UNSAT

11.1[11[E] Verified By: _____ / _____ / _____ / _____
Print Signature Z # Date

Comments: _____

11.1[1] Performed By: _____ / _____ / _____ / _____
Waste Handling Tech (print) Signature Z # Date

11.1[2][D] Reviewed By: _____ / _____ / _____ / _____
CSE (print) Signature Z # Date

11.1[6][A] Acceptance criteria satisfied: ☐ YES ☐ NO

11.1[8] Reviewed By: _____ / _____ / _____ / _____
SOS or designee (print) Signature Z # Date/Time

ATTACHMENT 5
Page 1 of 1

WCRRF PROHIBITED ITEM COLLECTION DRUM DATA SHEET

Container No. (10.3[8][B][e]):	Type (10.3[8][B][e]): ☐ Pressurized Container ☐ Aerosol Cans ☐ Other: _____		Date Created (10.3[8][B][e]):	Page _____ of _____

Date Item Added (10.3[8][B][e])	Item ID No. (10.3[8][B][e])	Parent Container No. (10.3[8][B][e])	Parent Accumulation Start Date (10.3[8][B][e])	Parent EPA Codes (10.3[8][B][e])	Item Description (10.3[8][B][e])	Item Shape (10.3[8][B][e])	Item Size (10.3[8][B][e])	Item Labeling (10.3[8][B][e])	Item Weight (lb) (10.3[8][B][e])	Initials/Z# (10.3[8][B][e])

ENCLOSURE 6

EP-WCRR-WO-DOP-1198, R1: WCRRF Waste Characterization Glovebox Operations

ENV-DO-14-0178

LA-UR-14-25296

Date: JUL 29 2014

WCRRF Waste Characterization Glovebox Operations

Effective Date: 3-3-2014

NOTE *This procedure may be either a Moderate or High/Complex Hazard activity based on the anticipated radiation levels during the performance of the activity in accordance with P300 requirements.*

Hazard Class:	☐ Low	☒ Moderate	☒ High/Complex
Usage Mode:	☐ Reference	☐ UET	☒ Both UET & Reference

The Responsible Manager has determined that the following organizations' review/concurrence is required for the initial document and for major revisions a same type and level review is required. Review documentation is contained in the Document History File:

Environmental Stewardship
Engineering
Industrial Hygiene and Safety
LTP DDP Project Manager
Operations Support
Quality Assurance
Radiation Protection
Shift Operations Manager
Subject-Matter Expert
WCRRF Shift Operation Supervisor

Responsible Manager, LTP-DDP Operations Manager

Name (print)	Z#	Signature	Date
Lou Jalbert	121997	/s/ L Jalbert	2-28-2014

Classification Review: ☐ N/A ☒ Unclassified ☐ UCNI ☐ Classified _____

Name (print)	Z#	Signature	Date
Kari Vitaletti	245399	//s/ K Vitaletti	2-28-2014

Working Copy / Information Only (circle one)
Initials / Date: _____/_____

This document fully satisfies the requirements of P300, Integrated Work Management, in order to systematically describe the work activity, the associated hazards, and the controls that **MUST** be employed to mitigate the risks.

REVISION HISTORY

Document Number	Issue Date	Action	Description
EP-WCRR-WO-DOP-0233, R.0	May 2007	New Document	
EP-WCRR-WO-DOP-0233, R.1	June 2007	Major Revision	Added requirement to move assay equipment outside of the WCG exclusion zone when not in use. Added precaution to prevent addition of items from multiple parent drums into a single daughter drum or Pipe Overpack Container. Added precaution for prohibited items – Class 1 oxidizers such as nitrates and reactive flammables.
EP-WCRR-WO-DOP-0233, R.2	June 2007	Major Revision	Added steps for dispositioning of potential pressurized containers.
EP-WCRR-WO-DOP-0233, R3	July 2007	Major Revision	Added steps for disposition of liquids. Added steps for actions to be taken in the event that any actual or suspected Class 1 oxidizers, flammables, or Pyrophoric materials/items are encountered.
EP-WCRR-WO-DOP-0233, R4	July 2007	Major Revision	Made use of glovebag to process Pu-238 inside the WCG optional based on input from the Facility ALARA Review Committee.
EP-WCRR-WO-DOP-0233, R5	July 2007	Major Revision	Added precaution for performance of diligent glove surveys and periodic glovebox wipe-downs when handling Pu-238. Deleted requirement for use of glovebag to process Pu-238 inside the WCG. Deleted Note in Sect. 8.12 which referenced use of partially filled POC's if all waste is from the same waste stream.
EP-WCRR-WO-DOP-0233, R.6	October 2007	Major Revision	Added precaution to prohibit remediation of following in the WCG 1) sealed containers > 4 liters that have a positive locking mechanism, 2) sealed un-vented containers > 4 liters with free liquids. Added action steps to take if containers are encountered. Added "allowed" container types that may be remediated. Added Attachment 3: Real Time Radiography Review for "Un-Allowed" Contents
EP-WCRR-WO-DOP-0233, R.7	October 2007	Minor Revision	Revised wording in Attachment 3 for review of RTR data.
EP-WCRR-WO-DOP-0233, R.8	October 2007	Major Revision	Deleted requirement for Real Time Radiography review & Attachment 3 (will be performed IAW EP-WCRR-WO-DOP-0211). Added section for processing high dose waste items (> 190 mrem/hr) of mixed material types. Added Attachment 3: Flowchart for Processing of High Dose Items of Mixed Material Types.
EP-WCRR-WO-DOP-0233, R.9	TBD	Major Revision	Incorporate the WCRR TSR page change to allow the opening of unvented 5- to 30-gal waste packages inside of the WCG.
EP-WCRR-WO-DOP-0233, R.10	January 2008	Major Revision	Delete requirement for SOM & CSE review of grounding sealed containers prior to venting.
EP-WCRR-WO-DOP-0233, R.11	March 2008	Minor Revision	Revised page 7 of 31 to include processing items that are heavy.

REVISION HISTORY (continued)

Document Number	Issue Date	Action	Description
EP-WCRR-WO-DOP-0233, R12	April 2009	Major	Revise procedure to incorporate the WCRRF TSR Revision 1 changes to the minimum staffing requirements which allows for the SOM to be on-call in the Operations Mode and now includes the requirements for the SOS (requires that the SOS be present at WCRRF during the Operations Mode and on-call in the Warm Standby Mode). This revision does not introduce any new hazards in this procedure. Update forms are required.
EP-WCRR-WO-DOP-0233, R13	May 11, 2009	Minor Revision	Revise procedure to provide guidance for the operator that the glovebox operations may continue after opening a < 5 gal unvented container without waiting 30 min., but the WCG electrical receptacles cannot be re-energized until 30 min. has elapsed since the unvented container was opened. Add additional instructions for creating loops within the document to address waste packages imbedded within other waste packages. This revision does not introduce any new hazards.
EP-WCRR-WO-DOP-0233, R14	June 12, 2009	Major Revision	Revise procedure to incorporate editorial corrections and to provide instructions for what to do when a shielded container is encountered containing radioactive material that exceeds the RWP limit. Add instructions to record the Waste Container Identification Number on the applicable attachments. This revision does not introduce any new hazards.
EP-WCRR-WO-DOP-0233, R15	November 24, 2009	Major Revision	Revise procedure to incorporate instructions for establishing, controlling, and the disposition of the Prohibited Item Collection Drum. Make editorial corrections as necessary. This revision does not introduce any new hazards.
EP-WCRR-WO-DOP-0233, R16	Approved for Training	Major Revision	Revise procedure to perform a pH test using pH strips and change “absorbent” to “approved absorbent” in Appendix 2. Make editorial corrections as necessary. This revision does not introduce any new hazards.
EP-WCRR-WO-DOP-0233, R17	February 18, 2010	Major Revision	Revise procedure to incorporate instructions for recording additional information for the prohibited items placed in the prohibited item collection drum. Incorporate process improvements (step sequences) and make editorial corrections as necessary. This revision does not introduce any new hazards. Incorporate the requirements of P300 and the hazards and controls from JHA 0008741 into this procedure.

REVISION HISTORY (continued)

Document Number	Issue Date	Action	Description
EP-WCRR-WO-DOP-0233, R18	March 22, 2010	Major Revision	Revise procedure to incorporate instructions for glovebox glove inspections and make editorial corrections as necessary. This revision does not introduce any new hazards.
EP-WCRR-WO-DOP-0233, R19	Training Only	Major Revision	Revise procedure to incorporate formality of operations into the procedure and incorporate the four parts of an integrated work document into the procedure in accordance with P300. Change title to WCRRF Waste Characterization Glovebox Operations. This revision is a total rewrite and revision bars have been omitted. This revision does not introduce any new hazards. This revision supersedes the following procedures: • EP-WCRR-WO-DOP-0223, Revision 4 • EP-WCRR-WO-DOP-0231, Revision 4 • EP-WCRR-WO-DOP-0232, Revision 8 • EP-WCRR-WO-DOP-0233, Revision 18
EP-WCRR-WO-DOP-0233, R20	October 27, 2010	Major Revision	Revise procedure to remove the requirements of SAC 5.10.1.2(1) in accordance with TSR Page Change 1.2, the fire blanket and MET-L-X is no longer a TSR requirement. The MET-L-X is being left as an administrative control. Make editorial corrections such as format changes. This revision does not introduce any new hazards.
EP-WCRR-WO-DOP-0233, R.21	November 2, 2010	Major Revision	Revise procedure to require that Building TA-50-69 is in the OPERATION mode for all activities in the procedure. Remove the Note in front of Step 4.3[7]. Add “approximately halfway” to Step 5.[9]. Change WARNING before Step 6.1[11] to indicate that there is no drum on the lift at this time. Revise Step 10.3[3] to remove requirement for testing a small portion of liquid and provide additional guidance for absorbing liquid. Make editorial corrections such as format changes. This revision does not introduce any new hazards.
EP-WCRR-WO-DOP-0233, R.22	November 8, 2010	Minor Revision	Revise procedure to modify hold tag note in Section 10.3 and modify step 10.3[2]. This revision does not introduce any new hazards.
EP-WCRR-WO-DOP-0233, R.23	February 8, 2011	Major Revision	Revise procedure to correct the TSR references and to allow the replacement of WCG bags in the WARM STANDBY mode. This revision does not introduce any new hazards.

REVISION HISTORY (continued)

Document Number	Issue Date	Action	Description
EP-WCRR-WO-DOP-0233, R.24	February 13, 2011	Minor Revision	Revise procedure to correct references and to provide clarification for the closure of a POC. Provide additional guidance for securing the horsetail during bag-in/bag-out operations. Make editorial corrections as necessary. This revision does not alter the purpose, scope, or intent of the original document. This revision does not introduce any new hazards.
EP-WCRR-WO-DOP-0233, R.25	April 13, 2011	Minor Revision	Revise procedure to incorporate process improvements. Incorporate instructions as to what to do if the parent drum closure ring cannot be reinstalled before lowering the parent drum. Make editorial corrections as necessary. This revision does not alter the purpose, scope, or intent of the original document. This revision does not introduce any new hazards.
EP-WCRR-WO-DOP-0233, R.26	April 18, 2011	Minor Revision	Revise procedure to provide instructions for loosening the nut on the closure ring bolt before lifting the waste drum up to the WCG. Make editorial corrections as necessary. This revision does not alter the purpose, scope, or intent of the original document. This revision does not introduce any new hazards.
EP-WCRR-WO-DOP-0233, R.27	June 9, 2011	Minor Revision	Revise procedure to provide instructions for inspecting drum lift hinge pins and attaching hinge pin retaining clips in Section 6.2; and add note that the retaining clips must be ML-2. Update equipment list to reflect ML-2 retaining clip. Make editorial corrections as necessary. This revision does not alter the purpose, scope, or intent of the original document. This revision does not introduce any new hazards.
EP-WCRR-WO-DOP-0233, R.28	August 10, 2011	Major Revision	This procedure is being revised to allow for bagging a POC onto the WCG, to correct the actions to be taken if a drum is stuck on the WCG drum lift, and to allow for processing waste at greater than 10 rem/hr. This last issue makes the activity a High/Complex Hazard Activity. The HA has been modified to allowed for the procedure to be performed as a Moderate or High/Complex Hazard Activity.
EP-WCRR-WO-DOP-0233, R.29	August 12, 2011	Minor Revision	Revise procedure to correct the high/complex activity hazard classification step in Attachment 1 to "> 10 rem/hr." This revision does not introduce any new hazards.

REVISION HISTORY (continued)

Document Number	Issue Date	Action	Description
EP-WCRR-WO-DOP-0233, Rev 29 IPC-1	August 29, 2011	IPC-1	Revised to change word in step 5.[11] from below to above and a caution and additional language to step 5[12] added ENSURE banding material is not placed around the hoop.
EP-WCRR-WO-DOP-0233, R.30	Training Only	Minor Revision	Revised to update requirements from page change 2.0 and 2.1 associated with STATIONARY Fire Watch in precautions, limitations and associated. Steps of the procedure when inventory is greater than >300 PE Ci. A STATIONARY FIRE WATCH is required in OPERATIONS and WARM STANDBY MODE when the WCG contains INVENTORY > 300 PE-Ci of EQUIVALENT COMBUSTIBLE WASTE. (SAC 5.10.1.7.1) and WCG SHALL be equipped with three 1-litre containers of carbon spheroids or MetL-X when the glovebox INVENTORY is >300 PE-Ci of EQUIVALENT COMBUSTIBLE WASTE (SAC 5.10.1.7.2), and WCG operators SHALL be trained in glovebox fire suppression techniques in order to extinguish small, early developing fires when processing INVENTORY > 300 PE-Ci of EQUIVALENT COMBUSTIBLE WASTE, in coordination with the STATIONARY FIRE WATCH, . This revision has not introduced any additional changes to the JHA.
EP-WCRR-WO-DOP-0233, R.31	Training Only	Minor Revision	Revise procedure to incorporate WCRRF TSR 2.0/2.1 IVR issues. Make editorial corrections as necessary. Revision does not introduce any additional hazards.
EP-WCRR-WO-DOP-0233, R.32	January 31, 2012	Minor Revision	Revise steps referencing 300 PE-Ci to add “equivalent combustible” after PE-Ci. Revision does not introduce any additional hazards.
EP-WCRR-WO-DOP-0233, R.33	April 5, 2012	Minor Revision	Revise procedure to incorporate instructions for the introduction of supplies into the WCG, for leaving a parent drum attached to the WCG overnight, and modify actions for a drum lift deficiency. Make editorial corrections such as correcting step numbering. Revision does not introduce any additional hazards.
EP-WCRR-WO-DOP-0233, R.34	May 24, 2012	Minor Revision	Revise procedure to provide guidance on simulating waste in a drum when obtaining radiation surveys and add the use of the Trolley Rail Clamp. Make editorial corrections such as correcting references. Revision does not introduce any additional hazards.

REVISION HISTORY (continued)

Document Number	Issue Date	Action	Description
EP-WCRR-WO-DOP-0233, R.35	July 2, 2012	Major Revision	Revised to separate verification steps from actual steps in Section 10.1 [10][D] and 10.1[10][E], 10.1[11][C], and reword Step 10.1[11][O] to read If directed by Supervision as a pre condition and Attachment 4 & 5 . Added steps for instructions for Administrative Lock Log, key, and lock Section 10. Added Steps to Section 4.1, 6.2, and 7.1 for using the Trolley Clamp Device. No additional hazards were identified during this revision. Rev bars in left column display locations of changes to the procedure.
EP-WCRR-WO-DOP-0233, R.36	August 1, 2012	Major Revision	Revised procedure to incorporate EP-SO-1708, and add steps to clarify the amount of absorbent needed when processing Nitrate Salts. Also added Appendix 6 Administrative Control Lock Log Sheet. No additional hazards were identified during this revision. Revision bars in the left column display location of changes in the procedure.
EP-WCRR-WO-DOP-0233, R.37	March 20, 2013	Major Revision	Revise procedure to allow flexibility with the processing of Nitrate Salts in order to permit flexibility with the amount of absorbent used. Make editorial corrections as necessary. Delete reference to the initiation of an NCR for issues associated with the waste material. No additional hazards were identified during this revision.
EP-WCRR-WO-DOP-0233, R.38	August 29, 2013	Major Revision	Revise procedure to incorporate steps for the implementation of WCATS at WCRRF. Make editorial corrections as necessary. This revision does not introduce any new hazards.
EP-WCRR-WO-DOP-1198, R.0	January 31, 2014	Major Revision	Revised to incorporate current list of approved Manual Drum Movements per WCRR-SO-13, Manual Drum Movement at WCRRF. Added WCRRF Desktop application to WCATS steps as applicable. Added updates for performing a critical lift in accordance with P101-25 Attachment B Revision 2. New procedure number to align with document control. No additional changes were introduces to the hazardous analysis. No Rev bars major revision
EP-WCRR-WO-DOP-1198, R.0	February 27, 2014	IPC	Revise procedure to correct step 6.1[14][A]. IF there are six randomly distributed broken wires in one rope lay or three broken wires in one strand in one rope lay. No additional hazards were incorporated in this ICP.

REVISION HISTORY (continued)

Document Number	Issue Date	Action	Description
EP-WCRR-WO-DOP-1198, R.1	March 3, 2014	Major Revision	Revised to add steps for drilling unvented containers Section 10 as applicable. Added steps in Section 6.2 to cut drum lid ringbolt prior to placement in WCG. Updated Appendix 1 footer and other corrections to P101-25 rev 3. Added Step 4.1[9] for handling Beryllium waste. Added Hazards to JHA and incorporated into the Precautions and Limitations.

TABLE OF CONTENTS

Section Page

TITLE PAGE 1
REVISION HISTORY 2
TABLE OF CONTENTS 8

1. PURPOSE 11

2. SCOPE 11

3. PRECAUTIONS AND LIMITATIONS 12

4. PREREQUISITES ACTIONS 20
4.1 Planning and Coordination 20
4.2 Materials and Equipment 22
4.2.1 Special Tools and Equipment 22
4.2.2 Consumables 23
4.2.3 Measurement and Test Equipment (M&TE) 23
4.3 Field Preparation 23
4.3 Field Preparation (continued) 27

5. PERFORMANCE—PARENT WASTE CONTAINER PREPARATION 32

6. PERFORMANCE—WCG PARENT DRUM LOADING/UNLOADING 36
6.1 WCG Drum Lift Daily Inspection 36
6.2 Parent Drum Loading 40
6.3 Parent Drum Unloading 44

7. PERFORMANCE—WCG PARENT DRUM BAG-ON/BAG-OFF OPERATIONS 47
7.1 Parent Drum Bag On 47
7.2 Parent Drum Bag Off 49

8. PERFORMANCE—WCG DAUGHTER DRUM, BAGPORT, OR GLOVEPORT BAG-ON/BAG-OFF OPERATIONS 54
8.1 Bag On Daughter Drum, Bagport, or Gloveport 54
8.2 Bag Off Daughter Drum 56

9. PERFORMANCE—ITEM BAG-IN/BAG-OUT OPERATIONS 60
9.1 WCG Item Bag-Out 60
9.2 WCG Introductory Port 64

10. PERFORMANCE—WCG WASTE PROCESSING 66
10.1 WCG Waste Processing Preparation 66
10.2 Waste Material Greater Than 190 mrem/hr 79
10.3 Prohibited Item Disposition 83
10.4 Waste Splitting Activities 89
10.5 Repackaging Activities 91
10.6 Processing Nitrate Salt Drums 92

11. POST-PERFORMANCE ACTIVITY 94

TABLE OF CONTENTS (continued)

Section Page

11.1 Disposition 94
11.2 Records Processing 96

12. REFERENCES 97

Appendices
Appendix 1, WCRRF Drum Lift Critical Lift Plan (P101-25, Attachment B) 99
Appendix 2, WCRRF Allowable Container Types For Remediation 109
Appendix 3, Example Preoperational Inspection Record For Overhead Cranes and Hoists 110
Appendix 4, Volumes of Cylindrical Inner Containers Near 4 Liters 111
Appendix 5, Flowchart For Processing of High Dose Items of Mixed Material Types 112
Appendix 6, Administrative Control Lock Log Sheet 113
Appendix 7, Manual Drum Movement Special Instructions 114

Attachments
Attachment 1, WCRRF WCG Waste Processing Data Sheet 115
Attachment 2, WCRRF WCG Drum Lift Inspection Data Sheet 122
Attachment 3, WCRRF WCG Breaching (Opening) Unvented, Sealed Waste Packages Checklist 119
Attachment 4, WCRRF WCG Breaching (Opening) Metal 5- to 30 gal Unvented 6 Sealed Waste Package Surveillance 122
Attachment 5, WCRRF Prohibited Item Collection Drum Data Sheet 123

1. PURPOSE

This procedure provides detailed instructions for Waste Characterization Glovebox (WCG) operations at the Waste Characterization, Reduction, and Repacking Facility (WCRRF).

TRU waste that has been identified as not satisfying Waste Isolation Pilot Plant (WIPP) acceptance criteria must be remediated to satisfy the WIPP criteria. Prohibited items must be removed or corrected and the container must also satisfy limits on the amount of radioactive material in each container. Containers that fail to satisfy the WIPP criteria maybe sent to WCRRF to be safely remediated in the WCG.

2. SCOPE

This procedure applies to personnel who perform WCG operations.

The Performance sections of this procedure may be performed independently or in conjunction with other Performance sections.

As used within this procedure a parent waste container is the originating waste container received at WCRRF for processing and a daughter drum is the resulting waste container packaged with the originating waste container waste. There may be multiple daughter drums.

This procedure addresses the following WCG activities:

- Preparation of parent waste containers
- Daughter drum, bagport, and gloveport bag-on/bag-off operations
- Parent drum bag-on/bag-off operations
- Parent drum WCG loading/unloading operations
- WCG waste processing

This procedure addresses the following activities for the complete processing and disposition of waste material within the WCG:

- Visual Examination (VE)
- Prohibited Item Dispositioning (PID)
- Pipe Overpack Component (POC)
- Waste Splitting
- Repackaging

This procedure is performed in conjunction with the Waste Compliance and Tracking System (WCATS), in order to track the WCRRF and Building TA-50-69 radioactive material inventory, populate WCATS with waste container information, to generate Transuranic (TRU)

2. SCOPE (continued)

Waste Storage Records (TWSRs), to generate labels, and to associate new daughter waste containers with the parent waste container.

The performance of this procedure may be classified as a Moderate or High/Complex Hazard activity based on the potential radiation levels encountered during the performance of this activity. To accommodate the two hazard classifications this document requires the identification of the potential radiation levels that may be encountered and documentation of the hazard classification level (moderate or high/complex).

Appendix 7, Manual Drum Movement Special Instructions, is a list of approved methods for manual drum movements developed in accordance with EP-DIV-SO-20057, EWMO Health and Safety Policy-Manual Movement for WCRRF. From the effective date of this procedure, any manual drum movements not listed in Appendix 7 of this procedure **SHALL** undergo the approval process in accordance with EP-DIV-SO-20057. If an interpretation of Appendix 7 is required, the LTP-DDP Operations Manager will provide the final determination as to whether the manual drum movement is captured on Appendix 7 or the manual drum movement instructions are to be developed in accordance with EP-DIV-SO-20057.

3. PRECAUTIONS AND LIMITATIONS

- This procedure contains special procedure step markings. **($)** is used to identify steps that implement WCRRF Safety Basis requirements. Steps containing **($)** may not be changed without Engineering approval to ensure the safety envelope is maintained.

- To comply with the intent of the As Low As Reasonably Achievable (ALARA) Program, all personnel **SHALL** apply the principles of time, distance, and shielding when working with radiological materials.

- Avoid the open area of a shielded container to prevent an increased exposure to radiation which could result from the streaming of radiation while accessing shielded containers during the processing of waste.

- Activities, items, and containers **SHALL** satisfy approved design specifications, regulatory requirements, process-specific parameters, and procedural requirements. Activities, items, or containers that do not conform to the approved specifications and requirements are considered nonconforming and Nonconformance Reports (NCRs) **SHALL** be generated in accordance with P330-6, Nonconformance Reporting, as required.

3. PRECAUTIONS AND LIMITATIONS (continued)

- When a worker observes an unsafe condition or act that may pose an imminent danger or other safety concern/hazard, the worker has the authority and responsibility to inform the worker engaged in the work and request that the work activity be paused and/or stopped based on the risk posed to the individual, the employees, the environment, or the facility in accordance with P101-18, Procedure for Pause/Stop Work.

- Supervision **SHALL** be notified if this procedure cannot be performed as written.

- Not Applicable (N/A) is documented on the attachments during the performance of this procedure indicating information that is not required to be recorded.

- **($)** TRU WASTE CONTAINERS **SHALL** not be stacked and **SHALL** not be lifted higher than 4 ft, excluding the WCG drum lift and lifts during loading or unloading from delivery trucks. (SAC 5.10.2.2)

- Drums **SHALL** not be lifted greater than 4 ft during any operation involved in preparing the drum.

- This procedure **SHALL** not be used to prepare DEGRADED/LOSS OF INTEGRITY drums. DEGRADED/LOSS OF INTEGRITY drums are prepared in accordance with EP-WCRR-WO-DOP-0236, WCRRF Loading/Unloading SWB or 85-Gal Drum.

- **($)** Drums **SHALL** be verified to weigh less than 630 lb before lifting the drums using the WCG drum lift. (SR 4.5.1) Administratively drum weights **SHALL** be limited to 624 lb in order to take into consideration the uncertainties of the instrumentation.

- This procedure is to be performed only by Waste Handling Operators as qualified Glovebox Operators.

- To avoid pinch points, the drum lift pendant operator **SHALL** announce operation of the drum lift before commencing raising/lowering of a drum and that all personnel **SHALL** stand clear and to the side of drum movement.

- **($)** The facility must be in the OPERATION MODE to process waste in the WCG. (TSR 1.2)

3. PRECAUTIONS AND LIMITATIONS (continued)

- The approximate weight of load should be known before moving and the appropriate capacity lift selected. Be aware of uneven loading and shifts in the load when moving.

- Drums can have sharp edges and create pinch points when being moved – use appropriate gloves when handling drums.

- Use proper lifting techniques and buddy system and wear steel toed shoes when performing heavy lifting or movements and comply with the requirements of EP-DIV-Policy-20057, EWMO Health and Safety Policy-Manual Movement.

- **($)** No flammable liquids or gases, and no combustible liquids with NFPA Flammability Rating greater than 1 **SHALL** be stored or used within BUILDING TA-50-69 when INVENTORY is in BUILDING TA-50-69 except three size 1 cylinders of P-10 gas and flammable or combustible liquids found in the TRU WASTE CONTAINER. (LCO 3.4.2)
- Portable high-efficiency particulate air (HEPA) filter ventilation equipment **SHALL** be removed from the WCG Exclusion Area after operations are complete. This limitation supports LCO 3.4.2.

- Due to the unique characteristics of Pu-238, diligent glove surveys should be performed before and after handling Pu-238, as well as periodic glovebox wipe downs.

- All operators involved in the execution of this procedure must be qualified as Waste Handling Operators.

- Fire Patrol or Stationary Fire Watch **SHALL** be established in accordance with the applicable Technical Safety Requirements and identified in EP-DIV-AP-0120, EWMO Watchbill Administration.

- STATIONARY FIRE WATCH **SHALL** be performed in accordance with EP-DIV-AP-0120, EWMO Watchbill Administration.

- **($)** WCG **SHALL** be equipped with three 1-liter containers of carbon spheroids or Met-L-X when the glovebox INVENTORY is > 300 PE-Ci of EQUIVALENT COMBUSTIBLE WASTE. (SAC 5.10.1.7.1)

- An administrative control will ensure that the WCG will be equipped with three 1-liter containers of carbon spheroids or MET-L-X to prevent the potential spread of a fire in the glovebox regardless of the inventory quantity in the WCG.

3. PRECAUTIONS AND LIMITATIONS (continued)

- **($)** A STATIONARY FIRE WATCH **SHALL** be in place when the WCG contains INVENTORY > 300 PE-Ci of EQUIVALENT COMBUSTIBLE WASTE, in order to extinguish small, early developing fires, in coordination with WCG operators. (SAC 5.10.1.7.2)
- When processing a parent drum if an item is encountered to be too large or heavy to handle supervision is to be notified.

- Use caution when performing glovebox operations. Operations may involve handling of sharp objects, applying force to objects with tools, lifting heavy materials or items.
  - The glovebox gloves **SHALL** have cut resistant (e.g., leather, or HexArmor®) gloves over them during glovebox operations when handling sharp objects or opening/closing waste containers.
  - Use the two-man rule when lifting heavy materials or items.
  - Cut or apply force away from hands and arms.
  - Use approved tools and techniques.
  - Tools **SHALL** be in good working order.

- **($)** WCG operators **SHALL** be trained in glovebox fire suppression techniques in order to extinguish small, early developing fires when processing INVENTORY > 300 PE-Ci of EQUIVALENT COMBUSTIBLE WASTE, in coordination with the STATIONARY FIRE WATCH. (SAC 5.10.1.7.3)

- Unvented, sealed waste packages are those waste packages that have a positive locking mechanism, such as a gasket with drum closure ring or a screw top lid (with no other openings) to seal the lid to the waste package.

- **($)** When breaching (opening) unvented, sealed waste packages in the WCG the following requirements **SHALL** be satisfied:
  - Non-sparking tools and processes **SHALL** be used, (SAC 5.10.1.6.1)
  - Electrical receptacles within the WCG **SHALL** be de-energized before opening the waste package and remain de-energized for a minimum of 30 minutes after removing the lid and lid restraining device. (SAC 5.10.1.6.2) and (SAC 5.10.1.6.3)

- **($)** Before breaching (opening)an unvented, sealed 5- to 30-gal waste packages in the WCG a lid restraining device **SHALL** be inspected for degradation and properly installed (SAC 5.10.1.5.1), and WCG operations **SHALL** be ceased for a minimum of 30 minutes following the removal of the waste package lid and lid restraining device (breaching). (SAC 5.10.1.5.2)

3. PRECAUTIONS AND LIMITATIONS (continued)

- **($)** When processing a positively sealed 30- to 5-gallon metal WASTE PACKAGE in the WCG, the parent 55-gallon drum bagged-on to the WCG and metal WASTE PACKAGE **SHALL** be grounded when the metal WASTE PACKAGE is breached and for 30 minutes after the removal of the lid and lid restraining device. (LCO 3.6)

- Personnel **SHALL** be aware of heat and cold stress indicators and observe co-workers in accordance with the Thermal Stress Awareness Course.

- Personnel protective equipment (PPE) **SHALL** be worn (e.g., safety shoes, cut resistance gloves, and respirator) as required by Industrial Hygiene/Health and Safety and in accordance with the Radiological Work Permit (RWP).

- Sharp objects **SHALL** be covered and properly stored when not in use. Wear cut/puncture resistant glove (e.g., leather) and cut away from your body when in use.

- All sharp objects that are introduced inside the glovebox **SHALL** be properly identified and stored when not in use in accordance with EP-DIV-AP-20047, LTP Glovebox/Glovebag and Glove Safety Program.

- Routine inspection of glovebox gloves **SHALL** be conducted in accordance with EP-DIV-AP-20047 and this procedure.

- To prevent personnel injury due to ergonomic, pinch point, and other general hazards, personnel **SHALL** maintain an awareness of the working environment and task activities and use good work practices and techniques, skill of craft, good ergonomic practices, and minimize time in awkward/uncomfortable positions.

- Spark-producing and non-sparking tools **SHALL** be distinguished from each other. Spark-producing tools are to be set aside in the WCG, and not handled, when non-sparking tools are required.

- A cordless drill may be used to open a parent drum. This will minimize overextending glovebox gloves and potential damage (i.e., tearing a glove) when using a ratchet. The cordless drill is considered to be a spark-producing tool and is to be placed aside in the WCG, and not handled, when non-sparking tools are required.

- Charging of portable electric equipment in the WCG **SHALL** not be performed when there is INVENTORY in the WCG.

3. PRECAUTIONS AND LIMITATIONS (continued)

- Charging of battery operated equipment external to the WCG **SHALL** not be charged within the WCG exclusion zone.

- If receptacle inside the WCG or in the WCG exclusion zone is used, the equipment being plugged in must be in the OFF position before inserting or removing the plug at the receptacle.

- Prohibited items are documented by two distinct processes. One is through the use of the fast scan process, indicated by the GREEN hold tag. The second is through the use of CCP's NCR, indicated by a RED hold tag.

- Waste placed into daughter drums or Pipe Overpack Containers (POCs) must be from a single parent drum.

- Based on waste acceptance criteria, Class 1 oxidizers such as nitrates, and reactive flammables such as lithium metal or hydrides are prohibited items in the WCRRF.

- Liquids removed from a parent drum must be remediated (absorbed) inside of a new container.

- Storage of drum lid restraints when not in use **SHALL** be such that the drum lid restraints are protected from degradation (e.g., daughter drum).

- Avoid slips, trips, and falls by wearing the proper footwear with slip-resistant soles and using handrails when using stairs. Use established pathways when available and avoid walking on uneven or unstable surfaces.

- Glass sample vials may contain residual granular plutonium hydride which can generate sparks when subjected to mechanical agitation. To reduce the possibility of breaking a glass sample vial and the generation of sparks, glass sample vials **SHALL** be handled with care and void volume reduction activities **SHALL** be performed without excessive force. (EP-DIV-REPORT-09)

- The fire protection system sprinkler head located in the WCG is a water source that if activated (inadvertently or as a result of an actual WCG fire) would result in the spread of radiological contamination. Contact with the sprinkler head during waste processing is to be avoided in order to reduce the possibility of the inadvertent initiation of water flow into the WCG.

3. PRECAUTIONS AND LIMITATIONS (continued)

- **($)** No combustibles **SHALL** be stored within the waste characterization glovebox (WCG) exclusion zone. The WCG exclusion zone is 10 ft around the WCG, up to GBE, or up to the walls of Room 102, whichever is less. (LCO 3.4)

  The following are excluded from the above limitations of LCO 3.4
  - INVENTORY that is in the WCG or staged in BUILDING TA-50-69.
  - Combustible components of support equipment (e.g., wiring insulation, operator platforms and rubber mats) within the WCG Exclusion Zone and associated with WCG processing.
  - Drum liners or wrapping around DEGRADED/LOSS OF INTEGRITY drums that are inside BUILDING TA-50-69 being loaded and working amounts of material necessary to complete bag on/off operations such as tape, cheese cloth, and extra operator gloves.
  - Hydraulic fluid within the engineered, closed-loop, containment systems.
  - Combustible components associated with a forklift.

- The Class 2 laser scanning head on the WCATS mobile device can cause eye injury if eye is exposed to the beam. Do <u>not</u> allow eyes of user or observers to become exposed to laser beam.

- The WCATS mobile device contains lithium-ion battery. The operating temperature recommendation for the Workabout Pro 3 (WCATS mobile device) is from -4 degrees F to 122 degrees F. Do <u>not</u> store the WCATS mobile device where temperatures are less than -40 °F or greater than 140 °F. Exposure to extreme temperatures (greater than 140 °F) may cause battery to explode. Keep mobile device out of direct sunlight for extended periods of time when not in use. Do not incinerate, mutilate, short circuit, or disassemble the battery pack. Do not dispose of in municipal waste receptacles. Dispose of in properly marked universal waste disposal areas.

- All manual physical movements of 55-gal and larger drums, whether empty or containing waste, **SHALL** be performed as a last resort and with written approval in accordance with EP-DIV-SO-20057, EWMO Health and Safety Policy-Manual Movement

- All approvals for manual physical movements in accordance with EP-DIV-SO-20057, EWMO Health and Safety Policy-Manual Movement and Appendix 7, Manual Drum Movement Special Instructions.

3. PRECAUTIONS AND LIMITATIONS (continued)

- All critical lift plans executed by LANL personnel **SHALL** be developed using Attachment B, LANL Critical Lift Plan, of P101-25, Cranes, Hoists, Lifting Devices, and Rigging Equipment.

- The instructions in this procedure satisfy the P101-25 ordinary lift requirements and the use of LANL Form 1611, Ordinary Lift Procedure, is not required. Not all of the items listed on Form 1611 are captured in this procedure because this procedure is performed using gantry cranes and forklifts in preapproved locations and lifts standard waste containers of a known size and volume.

- Forklift operations are governed by the LANL procedure P101-4, Forklift and Powered Industrial Trucks. P101-4 requires the completion of the applicable sections of a LANL procedure P101-25 Attachment B for critical lifts involving a forklift or powered industrial truck. Forklift operations not involving a critical lift (e.g., load suspended below the forks of the forklift) are not required to comply with the requirements of P101-25.

- Support Services Subcontractors executing this procedure SHALL comply with the safety and health requirements documented in contractual agreements with the LANL.

- Drill bits are sharp and can result in personnel injury or radiological contamination from compromised PPE.

4. PREREQUISITES ACTIONS

NOTE *The listed prerequisite actions may be completed in any order.*

4.1 Planning and Coordination

Supervisor or designee

[1] **ENSURE** that this procedure is the latest revision, and **IDENTIFY** this document as Working Copy or Information Only on the Title Page.

[2] **ENSURE** that the performance of this procedure has been scheduled on the WCRRF schedule.

[3] **ENSURE** that an RWP for the planned activity has been issued.

[4] **ENSURE** that a pre-job briefing is conducted for all personnel involved in the performance of this procedure, in accordance with EP-DIV-AP-0112, EWMO Pre-Job Briefings, and that the pre-job briefing included weather conditions, communication requirements, hazards/controls and emergency response actions.

[5] **ENSURE** that, as a minimum, the following personnel trained in the use of this procedure are available for performance of this procedure, as required:

- Two Radiological Control Technician (RCT)
- Four Waste Handling Technician
- One Supervisor (e.g., Shift Operations Supervisor or Person-In-Charge)
- One Central Characterization Project (CCP) representative [Visual Examination (VE) only]
- **($)** STATIONARY FIRE WATCH (greater than 300 PE-Ci equivalent combustible waste only) (SAC 5.10.1.7.2)

4.1 Planning and Coordination (continued)

[6] **IF** performing Section 10, WCG Waste Processing,
THEN:

[A] **ENSURE** that the waste containers to be processed have been evaluated in accordance with EP-DIV-AP-20098, LTP TRU Waste Remediation Safety Evaluation, and that a copy of the LTP Waste Remediation Safety Evaluation Data Sheet (EP-DIV-AP-20098 Attachment 1) has been obtained for each waste container to be processed.

[B] **INITIATE** a copy of Attachment 1, WCRRF WCG Waste Processing Data Sheet for each waste container to be processed, and **DOCUMENT** the following information:

- Parent Waste Container Number (record on each page of Attachment 1)
- Prohibited Items, if present
- Parent waste container RCRA Designations

[C] **ATTACH** a copy of the LTP Waste Remediation Safety Evaluation Data Sheet (EP-DIV-AP-20098 Attachment 1) to Attachment 1.

[7] **OBTAIN** a blank Administrative Control Lock Log Sheet form 10.4 of EP-DIV-AP-0117, lock, and key from the WCRRF Operations Center. (e.g., See Appendix 6, Administrative Control Lock Log Sheet)

[8] **ENSURE** that the TRU daughter waste container labels (e.g., Shorty barcode labels) have been obtained from the Waste Help Team (wastehelp@lanl.gov).

[9] **ENSURE** that beryllium-containing waste is identified and appropriately labeled before handling and that any additional controls are in place before processing.

4.2 Materials and Equipment

4.2.1 Special Tools and Equipment

NOTE *The list of special tools and equipment is not an all inclusive list and additional tools and equipment may be used as necessary.*

Waste Handling Technician or Supervision

[1] **ENSURE** that the following special tools and equipment are available, as required:

- Banding tool
- Cut resistant (e.g., HexArmor™, leather, or leather palm mechanics) gloves
- Cutting tool (e.g., utility knife or PVC cutter)
- Drum dolly
- Hacksaw and blades
- Lead blankets
- ML-2 drum lift hinge pin retaining clips (e.g., E-clips)
- Non-sparking hand drill (hand crank or electric) with a speed selector and drill bits
- Non-sparking tools for separating and processing waste
- Permanent marker
- Portable HEPA-filter exhaust system
- Removable lead glass windows
- Safety glasses with side shields
- Tools for separating and processing waste
- Two-wheel dolly
- WCATS mobile device
- WCG metal bucket

4.2.2 Consumables

NOTE *The list of consumables is not an all inclusive list and additional consumables may be used as necessary.*

Waste Handling Technician or Supervision

[1] **ENSURE** that the following consumables are available, as required:

- 3 Liters Carbon Spheroids or MET-L-X
- Bag-off bags (filtered or unfiltered)
- Banding buckles
- Banding material
- Binding ties
- Chemwipes or equivalent
- Drum labels
- Fantastik or equivalent
- Kitty Litter/Zeolite® absorbent
- Lead or lead equivalent WCG gloves
- Litmus paper
- Nitrile gloves
- Plastic waste bags
- Tape (duct or vinyl)
- Velcro®
- Wire rope inspection cloth (e.g., cheese cloth)

4.2.3 Measurement and Test Equipment (M&TE)

Waste Handling Technician or Supervision

[1] **ENSURE** that the following measuring and test equipment are available, as required:

- Platform scale
- WCG scale

4.3 Field Preparation

Waste Handling Technician or Supervision

[1] **($) IF** performing any section except Section 8.1, Bag On Daughter Drum, Bagport, or Gloveport, without bagging in waste material,
THEN ENSURE that Building TA-50-69 is in the OPERATION MODE in accordance with EP-WCRR-FO-DOP-0201, WCRRF and Building TA-50-69 TSR Mode Change, and **CHECK** (√) OPERATIONS on Attachment 1, WCRRF WCG Waste Processing Data Sheet. (TSR 1.2)

4.3 Field Preparation (continued))

[2] **($) IF** performing Section 8.1,
AND waste material is **NOT** being introduced into the WCG,
THEN ENSURE that Building TA-50-69 is in the OPERATION or WARM STANDBY MODE in accordance with EP-WCRR-FO-DOP-0201, and **CHECK** (√) OPERATION or WARM STANDBY on Attachment 1. (TSR 1.2)

[3] **ENSURE** that the WCRRF Operations Center has authorized the performance of this procedure.

[4] **IF** performing one of the following sections:
Section 5, Parent Waste Container Preparation,
Section 6, WCG Parent Drum Loading/Unloading,
Section 10, WCG Waste Processing,
THEN:

[A] **ENSURE** that the weekly Platform Scale calibration verification has been performed in accordance with EP-WCRR-WO-DOP-0239, Verifying WCRRF Scales.

[B] **RECORD** the platform scale equipment/serial number and calibration due date on Attachment 1.

[C] **IF** the platform scale exceeds the calibration due date,
THEN NOTIFY the WCRRF Operations Center of the discrepancy, and **REQUEST** the applicable actions.

[5] **IF** performing Section 10,
THEN:

[A] **ENSURE** that preprinted Item Identification Number (ID) labels and Poly-Chlorinated Biphenyl (PCB) Item Number labels are obtained from the Waste Management Coordinator.

[B] **($) ENSURE** that WCG contains three 1-Liter containers of carbon spheroids or MET-L-X, and **DOCUMENT** (initials and date) on Attachment 1.
(SAC 5.10.1.7.1)

4.3 Field Preparation (continued)

[C] **ENSURE** that the required number of daughter drums have been prepared in accordance with EP-WCRR-WO-DOP-0221, Preparing and Closing 55-gal Daughter Drum Assemblies.

[D] **REVIEW** Appendix 2, WCRRF Allowable Container Types For Remediation.

[E] **ENSURE** that Prohibited Item Collection Containers (aerosol and pressurized cylinders) or previously initiated Prohibited Item Collection Containers are available, as necessary, and that the Prohibited Item Collection Containers (Holdup Container) have been generated in WCATS and have been labeled.

NOTE *The daughter waste containers (e.g., 55-gal drums) may be prepared in advance of the waste container remediation activity and at a location other than the processing area. As such, the lids may be temporarily placed on the daughter waste containers to allow them to be safely transported to the processing area.*

[F] **ENSURE** that a sufficient number of daughter waste containers (e.g., 55-gal drums) are available, as necessary.

[6] **($) IF** performing Section 10,
AND the parent container TRU-waste material inventory value is greater than 300 PE-Ci equivalent combustible waste,
THEN ENSURE a STATIONARY FIRE WATCH has been established, and
DOCUMENT (Initial and Date) on Attachment 1. (SAC 5.10.1.7.2)

NOTE *The Technical Safety Requirements for WCRRF specify that a critical lift plan is required for lifts and forklift movements involving DEGRADED or LOSS OF INTEGRITY drums. Additionally a critical lift plan is required in accordance with the requirements of P101-25, Cranes, Hoists, Lifting Devices, and Rigging Equipment, such as when the weight of the parent drum is greater than 75% of the WCG drum lift rated capacity (624 lb x .75 = 468 lb).*

[7] **IF** performing Section 6,
THEN:

[A] **DETERMINE** whether the parent drum is a degraded or loss of integrity drum, or whether the parent drum weight is greater than 468 lb but less than or equal to 624 lb, and **CHECK** (√) YES or NO on Attachment 1.

4.3 Field Preparation (continued)

NOTE 1 *The Person-in-Charge (PIC) appointed for the safe handling of critical loads and for the safe handling of non-critical items in, around, or above spaces in which critical items are located* ***SHALL*** *be trained in accordance with P101-25.*

NOTE 2 *WCRRF drum lift operations is a pre-engineered lift in accordance with P101-25 and require a Critical Lift Plan when the lift satisfies the critical lift criteria of P101-25. Critical lifts executed by LANL personnel* ***SHALL*** *be performed and documented in accordance with Appendix 1, WCRRF Drum Lift Critical Lift Plan (P101-25, Attachment B). Subcontract personnel* ***SHALL*** *comply with the safety and health requirements documented in contractual agreements with LANL and may use the information provided in Appendix 1.*

NOTE 3 *The WCG Drum Lift is a pre-engineered and an approved critical lift. Some items in Appendix 1,* are already pre-populated, therefore the PIC will be required to complete the remaining items and sections left blank.

NOTE 4 *Appendix 1 is a pre-engineered critical lift plan for degraded or loss of integrity drums. Once the Appendix 1 has been completed for the first waste container, the paperwork may be duplicated for each additional lift with the following conditions:*

- The critical lifts performed are in the same shift
- The critical lift team members do not change (i.e., PIC, Crane Operator)
- The critical lift activities performed are the same for each drum handled as specified in Appendix 1

[B] **($) IF** the parent drum is a degraded or loss of integrity drum, (AC 5.10.3.1) **OR** the parent drum weight is greater than 468 lb but less than or equal to 624 lb, **THEN GENERATE** a critical lift plan.

4.3 Field Preparation (continued)

WARNING

1. **Performance of a pre-operational inspection of the WCG drum lift (Form 1489), SHALL ensure that the entire length of the drum lift cable is inspected. This will require that the drum lift be exercised from the full up to the full down positions.**

2. **The drum lift pendant operator is to announce operation of the lift before raising or lowering the drum and all personnel are to stand clear and to the side of drum movement in order to prevent personnel injuries.**

NOTE *The inspection criteria identified as N/A on Appendix 3, Example Preoperational Inspection record for Overhead Cranes and Hoists, are not required to be performed.*

[C] **IF** performing Section 6 for the first time for the day,
THEN PERFORM a pre-operational inspection of the WCG drum lift components in accordance with P101-25 by completing the applicable sections of Form 1489.

[8] **IF** performing WCG operations (e.g., Section 10, WCG Waste Processing),
THEN:

[A] **REVIEW** the WCG glove change due date marked on all WCG gloves.

[B] **IF** the WCG glove change due date marked on the WCG glove has been exceeded, **OR** a WCG glove or bag-in/bag-out bag fails the inspection,
THEN:

[a] **STOP** operations.

[b] **IDENTIFY** the WCG glove or bag-in/bag-out bag as out-of-service.

[c] **NOTIFY** supervision and an RCT for the applicable actions in accordance with EP-DIV-AP-20047.

4.3 Field Preparation (continued)

NOTE *WCG gloves with a glove change due date that has been exceeded are not required to be inspected in accordance with the following step.*

[C] **INSPECT** the internal and external surfaces of each WCG glove and bag-in/bag-out bag for the following:

- Cracks
- Cuts
- Discoloration
- Exposed color of the lead liner, if present
- Layer separations
- Natural degradation
- Obvious physical signs of deterioration
- Punctures
- Radiological contamination (internal only)
- Splits
- Stiffness
- Surface deposits/debris

[D] **CHECK** (√) SAT or UNSAT on Attachment 1, and **DOCUMENT** the completion of the WCG glove inspection by signing and dating on Attachment 1.

[9] **ENSURE** that glovebox inspections have been completed in accordance with EP-DIV-AP-20047.

[10] **IF** Section 10.4, Waste Splitting Activities, is to be performed,
THEN ENSURE that Low-Level Waste Characterization personnel are available, as necessary.

[11] **IF** this procedure is being performed as a High/Complex Hazard activity as determined in Section 4.1, Planning and Coordination,
THEN:

[A] **ENSURE** that the temporary lead glass windows have been attached (e.g., Velcro®) to the inside of the applicable WCG windows.

[B] **ENSURE** that lead or lead equivalent gloves have been installed on the WCG gloveports.

[C] **ENSURE** that lead blankets have been placed along the bottom of the WCG.

4.3 Field Preparation (continued)

NOTE 1 *The following step may be performed out of sequence and may be performed in Building TA-50-37 (Artic).*

NOTE 2 *The TRU DRUM PREPARATION task on the WCATS mobile device or desktop application may be performed in conjunction with the performance of the physical build of a POC.*

[12] **IF** a POC is to be used,
AND the POC is to be bagged onto the WCG,
THEN:

[A] **OBTAIN** a POC bag-on bag.

[B] **APPLY** vinyl tape to the POC bag-on bag, with a smear pad centered on the tape, over the filter.

[C] **INFLATE** the POC bag-on bag with air from a compressed air source.

[D] **INSPECT** the POC bag-on bag for damage, cuts, or leaks by looking, listening, and feeling.

[E] **STRETCH** the POC bag-on bag's bungee cord, and **INSPECT** the bungee cord for cuts or damage.

[F] **IF** the POC bag-on bag or bungee cord fails the inspection,
THEN:

[a] **IDENTIFY** (e.g., tag or mark) the failed item indicating that item is defective.

[b] **SEGREGATE** the failed item in order to prevent the item from being used.

4.3 Field Preparation (continued)

NOTE 1 *A Quality Assurance (QA) representative may be contacted for assistance with the NCR process.*

NOTE 2 *The NCR may be initiated at an operationally convenient time.*

[c] **ENSURE** that an NCR is initiated in accordance with P330-6, Nonconformance Reporting, as required.

[d] **REPLACE** the defective item.

[e] **GO** to Step 4.3[12][A].

NOTE *The following step may be performed out of sequence to allow for the bulk inspection of liners in order to improve operational efficiencies.*

[G] **OBTAIN** and **VISUALLY INSPECT** a POC plastic/cardboard liner ensuring the exterior surfaces are smooth.

[H] **IF** POC plastic/cardboard liner fails the inspection,
THEN:

[a] **IDENTIFY** (e.g., tag or mark) the POC plastic/cardboard liner indicating that the POC plastic/cardboard liner is defective.

[b] **SEGREGATE** the POC plastic/cardboard liner in order to prevent the item from being used.

NOTE 1 *A Quality Assurance (QA) representative may be contacted for assistance with the NCR process.*

NOTE 2 *The NCR may be initiated at an operationally convenient time.*

[c] **ENSURE** that an NCR is initiated in accordance with P330-6, Nonconformance Reporting, as required.

[d] **REPLACE** the POC plastic/cardboard liner.

[e] **GO** to Step 4.3[12][G].

4.3 Field Preparation (continued)

[I] **PLACE** the POC plastic/cardboard liner into the POC bag-on bag.

[J] **PLACE** the POC plastic/cardboard liner and bag into the POC pipe component.

[K] **ENSURE** that excess POC bag-on bag is placed inside of the POC pipe component.

[L] **PLACE** the POC pipe component lid on the POC pipe component and **TIGHTEN** the lid sufficiently to hold the lid on the POC pipe component.

[M] **PLACE** the POC drum lid on the POC drum and **TIGHTEN** the closure ringbolt sufficiently to hold the drum lid in place.

[13] **ENSURE** that the new daughter waste containers (e.g., POCs and 55-gal drums) have been created in WCATS desktop application using the TRU DRUM PREPARATION application and that the Shorty barcode labels have been applied to the new daughter waste containers (e.g., POCs and 55-gal drums) in accordance with EP-DIV-DOP-20043, LTP TRU Waste Container Labeling.

5. PERFORMANCE—PARENT WASTE CONTAINER PREPARATION

This section is a stand-alone section and may be performed independently of or in conjunction with other Performance sections.

NOTE 1 *Radiological surveys may be performed as determined necessary [e.g., by an RP representative (e.g., RCT)] anytime during the performance of this procedure.*

NOTE 2 *All manual drum movement will be performed in accordance with Appendix 7, Manual Drum Movements Special Instructions and EP-DIV-Policy-20057, EWMO Health and Safety Policy-Manual Movement.*

Waste Handling Technician

[1] **ENSURE** that the prerequisite actions have been completed.

NOTE *Steps 5.[2] through 5.[4] may be performed in Building TA-50-37 (Artic).*

[2] **OBTAIN** an unfiltered bag-off bag or a filtered bag-off bag, and **TAPE OVER** the inside and outside filter openings of a filtered bag-off bag, as applicable.

CAUTION

Care should be exercised when not to over inflate the filtered bag. Apply only enough air to inspect for leaks. (e.g., pins holes, leakage around filter attachment points). Failure to comply with this caution could lead to overstressing the filter and possible damage to the filtered bag.

[3] **INFLATE** the filtered or no filtered bagout bag carefully and slowly while sealing the bag (i.e. securing opening with hand).

[4] **INSPECT** the bag-off bag for damage or cuts examining by sight, sound, and feel.

[5] **IF** the bag-off bag does **NOT** hold the air,
THEN:

[A] **IDENTIFY** (e.g., tag or mark) the bag-off bag indicating that the bag-off bag is defective.

[B] **SEGREGATE** the bag-off bag in order to prevent the item from being used.

5. PERFORMANCE—PARENT WASTE CONTAINER PREPARATION (continued)

NOTE *The NCR may be initiated at a time that is operationally convenient.*

[C] **ENSURE** that an NCR is initiated in accordance with P330-6, Nonconformance Reporting.

[D] **GO** to Step 5.[2].

[6] **TAPE** the drum closure ringbolt in order to prevent tearing or cutting the unfiltered bag-on bag.

[7] **IF** the drum to be processed is **NOT** a degraded or loss of integrity drum, **THEN CUT** off the bottom of a bag-off bag approximately 27 to 30 inches from the bottom of the bag-off bag in order to create a bag-off sleeve.

[8] **SLIDE** the bag-off bag over the top of the drum down to between the second and third rolling hoops (from the top) ensuring that the first and second rolling hoops (from the top) are covered.

NOTE *Enough room must be left between the tape and the drum closure ringbolt in order for the drum closure ring to be removed without damaging the bag-on bag.*

[9] **WRAP** tape (vinyl or duct) around the container so that the bag-off bag is tightly bound approximately halfway between the second and third rolling hoops near the top of the drum and overlapping the bag-off bag onto the drum.

[10] **ENSURE** that the drum wrapping (e.g., tape and bag-off bag) is airtight and no air pockets are present.

WARNING

Placement of duct tape below top rolling hoop may vary to ensure the surface area selected is free of abnormalties (e.g., dents, scrapes). Failure to comply with this could lead to an improper seal and potential unwanted radiological contamintation.

[11] **IF** the abnormalities (e.g., dents, scrapes) are discovered above the top rolling hoop, **THEN WRAP** duct tape around the drum just below the top rolling hoop on a surface that does not container abnormalities (e.g. dents, scrapes.

5. PERFORMANCE—PARENT WASTE CONTAINER PREPARATION (continued)

[12] **WRAP** duct tape around the drum just above the top rolling hoop on a surface that does not contain abnormalities (e.g., dents, scrapes).

CAUTION

Improper placement of the banding material over the drum hoop may result in movement and banding material slipping down the drum. Do not place banding material over drum hoop.

[13] **PLACE** banding material around the drum over the installed duct tape and **ENSURE** banding material is not placed over the drum hoop.

[14] **TIGHTEN** and **BUCKLE** the banding material with a banding tool.

[15] **COVER** the banding buckle with duct tape to prevent bag tears.

[16] **ROLL DOWN** the remaining bag-off bag around drum.

NOTE *The following two steps may be performed just before loading the drum on the WCG drum lift.*

[17] **IF** items (e.g., gloves or tools) are to be bagged into the WCG with the Prepared Parent Drum,
THEN SECURE the items to the top of the Prepared Parent Drum.

[18] **WEIGH** the Prepared Parent Drum with items secured to the drum top, as applicable, and **RECORD** the Prepared Parent Drum Weight on Attachment 1.

[19] **IF** the Prepared Parent Drum Weight is greater than or equal to 624 lb,
THEN:

[A] **STOP** the work activity.

NOTE *The WCRRF Operations Center notifies the Transuranic (TRU) Waste Disposition Project (WDP) Operations Manager (OM) or designee and the Shift Operations Supervisor (SOS) of the discrepancy.*

[B] **NOTIFY** the WCRRF Operations Center of the discrepancy.

5. PERFORMANCE—PARENT WASTE CONTAINER PREPARATION (continued)

[C] **REQUEST** the applicable actions from the SOS or designee.

[20] **RECORD** the following information on the parent drum lid using a permanent marker:

- Parent drum number
- Parent drum weight
- Date
- Platform scale serial number
- Platform scale calibration due date

6. PERFORMANCE—WCG PARENT DRUM LOADING/UNLOADING

NOTE 1 *Radiological surveys may be performed as determined necessary [e.g., by an RP representative (e.g., RCT)] anytime during the performance of this procedure.*

NOTE 2 *All manual drum movement will be performed in accordance with Appendix 7, Manual Drum Movements Special Instructions and EP-DIV-Policy-20057, EWMO Health and Safety Policy-Manual Movement.*

6.1 WCG Drum Lift Daily Inspection

This sub-section is a stand-alone sub-section and may be performed independently of or in conjunction with other sub-sections.

This inspection is to be performed once each work day before the WCG drum lift is to be used to hoist a waste drum.

NOTE *The individual performing the WCG drum lift inspection **SHALL** be at a minimum a certified Qualified Crane Operator.*

Waste Handling Technician

[1] **OBTAIN** and **REVIEW** the previously completed copy of Attachment 2, WCRRF WCG Drum Lift Inspection Data Sheet.

[2] **OBTAIN** a new copy of attachment 2, and **RECORD** the inspection date on Attachment 2.

[3] **RECORD** any previously identified wire rope damage in Table 3-1 or Table 3-2, or N/A as applicable, on Attachment 2, and **CHECK** (√) applicable box in the Previously Identified Damage column in Table 3-1 or Table 3-2, as applicable, on Attachment 2.

[4] **RECORD** the number of threads exposed out the end of the shaft bolt locknut on the upper, middle, and lower pulley shaft bolts from the previous inspection on Attachment 2.

6.1 WCG Drum Lift Daily Inspection (continued)

[5] **DETERMINE** and **RECORD** on Attachment 2 the current number of threads exposed out the end of the shaft bolt locknut on the upper, middle, and lower pulley shaft bolts (see illustration below).

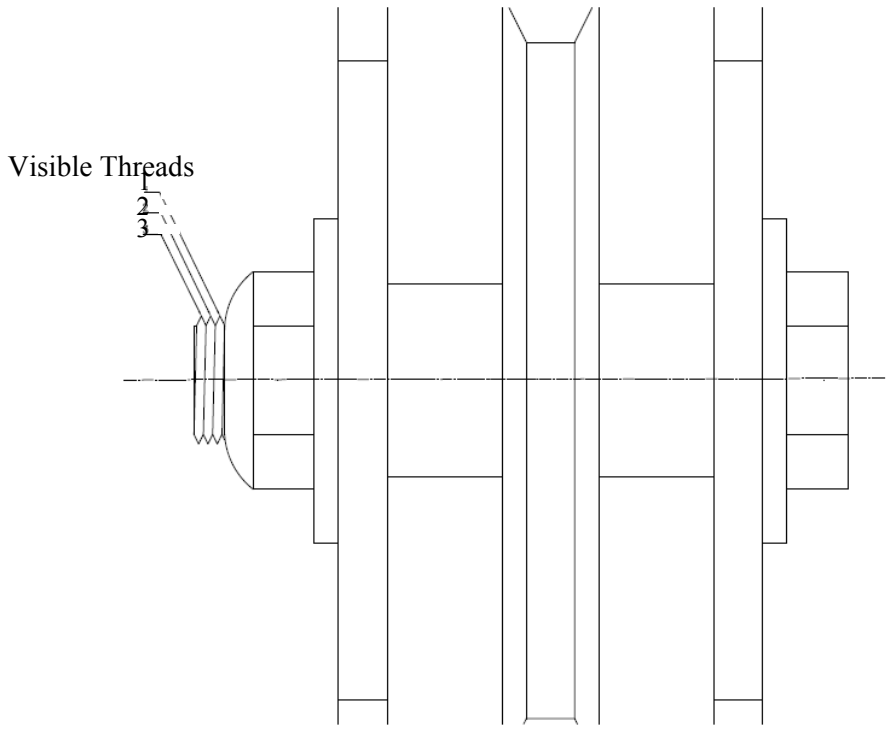

[6] **DETERMINE** whether the shaft bolt end is flush with or extends out of the outer end of the shaft bolt locknut, and **CHECK** (√) YES or NO on Attachment 2.

[7] **INSPECT** the upper, middle, and lower pulley shaft bolts for any signs of wear between the shaft bolt and the support flanges (e.g., shaft not perpendicular to the flange plate), and **CHECK** (√) SAT or UNSAT for each shaft bolt on Attachment 2.

WARNING

The drum lift pendant operator is to announce operation of the lift before raising or lowering the drum and all personnel are to stand clear and to the side of drum movement in order to prevent personnel injuries.

[8] **ENSURE** that the drum trolley is in the full-down position.

6.1 WCG Drum Lift Daily Inspection (continued)

WARNING

Cut resistant (e.g., leather or leather palm mechanics) gloves are to be worn while inspecting the drum trolley wire rope and the cloth is to be held loosely in order to prevent skin punctures resulting from broken wires of the wire rope.

[9] **INSPECT** the entire length of the exposed, upper wire rope from the top of the drum trolley to the wire rope hoist drum by loosely gripping the cloth (e.g., cheese cloth) while sliding the cloth along the length of the wire rope, and **CHECK** (√) YES or NO to indicate whether any new damage is identified on Attachment 2 to indicate whether any upper wire rope damage is discovered.

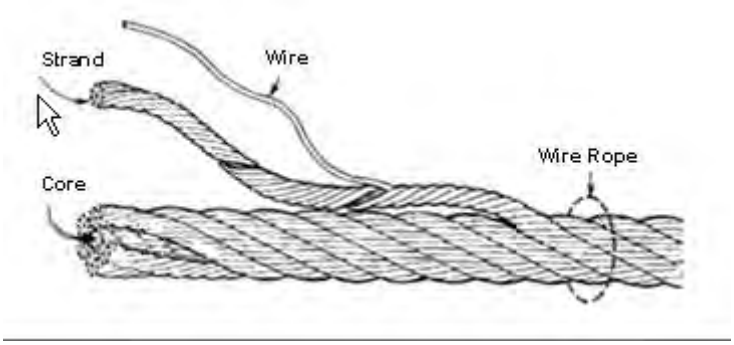

[10] **IF** the cloth snags on the wire rope,
THEN VISUALLY INSPECT the wire rope snag location for damage, and **DOCUMENT** the results of the inspection including the location of the damage in Table 3-1, Upper Wire Rope Damage, on Attachment 2.

WARNING

The drum lift pendant operator is to announce operation of the lift before raising or lowering the lift and all personnel are to stand clear and to the side of drum movement in order to prevent personnel injuries.

[11] **ENSURE** that the drum trolley is in the full-up position.

6.1 WCG Drum Lift Daily Inspection (continued)

WARNING

Cut resistant (e.g., leather or leather palm mechanics) gloves are to be worn while inspecting the drum trolley wire rope and the cloth is to be held loosely in order to prevent skin punctures resulting from broken wires of the wire rope.

[12] **INSPECT** the entire length of the exposed, lower wire rope from the top of the drum trolley to the wire rope hoist by loosely gripping the cloth (e.g., cheese cloth) while sliding the cloth along the length of the wire rope, and **CHECK** (√) YES or NO to indicate whether any new damage is identified on Attachment 2 to indicate whether any lower wire rope damage is discovered.

[13] **IF** the cloth snags on the wire rope,
THEN VISUALLY INSPECT the wire rope snag location for damage, and **DOCUMENT** the results of the inspection including the location of the damage in Table 3-2, Lower Wire Rope Damage, on Attachment 2.

[14] **IF** there are six randomly distributed broken wires in one rope lay or three broken wires in one strand in one rope lay,
THEN:

[A] **CHECK** (√) UNSAT for the wire rope inspection on Attachment 2.

[B] **GO** to Step 6.1[16].

[15] **CHECK** (√) SAT for the wire rope inspection on Attachment 2.

[16] **IF** UNSAT was checked (√) for any of the WCG inspections,
THEN:

[A] **STOP** the work activity.

[B] **RECORD** Printed name, signature, Z# and **DATE** on Attachment 2.

NOTE *The WCRRF Operations Center notifies the WDP SOM or designee and the Cognizant System Engineer (CSE) of the discrepancy.*

[C] **NOTIFY** the WCRRF Operations Center of the discrepancy.

[D] **DOCUMENT** the notifications and discrepancies in the Comments section of Attachment 2.

6.2 Parent Drum Loading

This sub-section is a stand-alone sub-section and may be performed independently of or in conjunction with other sub-sections.

Waste Handling Technician

[1] **ENSURE** that the prerequisite actions have been completed.

RCT

[2] **PERFORM** radiological surveys as necessary during the waste container handling evolutions.

Waste Handling Technician

[3] **IF** radiological contamination is detected,
THEN FOLLOW the instructions of the RCT.

[4] **RECORD** the Processing Date (current date) on Attachment 1.

[5] **IF** lead blankets are to be used as radiological shielding on the parent drum,
THEN:

[A] **WEIGH** the lead blankets, as necessary, and **RECORD** the lead blanket's weight on Attachment 1.

[B] **SUM** the Lead Blanket Weights and the Prepared Parent Drum Weight, and **RECORD** the Total Prepared Parent Drum Weight (drum and lead blankets) on Attachment 1.

[C] **GO** to Step 6.2[7].

[6] **RECORD** the Total Prepared Parent Drum Weight (parent drum weight) on Attachment 1.

[7] **($) DETERMINE** whether the Total Parent Drum Weight is less than 624 lb, and **CHECK** (√) SAT or UNSAT for the Total Parent Drum weighing less than 624 lb on Attachment 1. (SR 4.5.1)

6.2 Parent Drum Loading (continued)

[8] **IF** the Total Parent Drum Weight is greater than or equal to 624 lb,
THEN:

[A] **STOP** the work activity.

NOTE *The WCRRF Operations Center notifies the TRU WDP OM or designee and the SOS of the drum status.*

[B] **NOTIFY** the WCRRF Operations Center, of the drum status.

[C] **REQUEST** the applicable actions from the SOS or designee.

NOTE *P101-25 provides instructions for a conducting a critical lift.*

[9] **($) IF** the prepared parent drum is a degraded or loss of integrity drum, (AC 5.10.3.1)
OR the parent drum weight is greater than 468 lb,
THEN ENSURE that the prepared parent drum is loaded in compliance with Appendix 1, or P101-25 Attachment B Critical Lift plan and this sub-section.

[10] **ENSURE** that the drum lift key has been obtained from the key box.

[11] **ENSURE** that the drum lift key has been inserted, and has been turned to ON in order to establish power to the drum lift.

[12] **ENSURE** that the drum lift has been lowered to the lower limit switch or until the bellyband of the lift cradle can grasp the drum evenly using the drum lift pendent.

[13] **IF** the WCG parent drum port cover is present,
THEN REMOVE the WCG parent drum port cover, and **SET** the WCG parent drum port cover aside.

[14] **ENSURE** that respiratory protection is worn as required by the applicable RWP.

[15] **PERFORM** a visual inspection of the drum lid ringbolt assembly to determine if the drum lid ringbolt is damaged, degraded, or seized in the drum lid ring lugs.

6.2 Parent Drum Loading (continued)

[16] **IF** the ringbolt is damaged, degraded or seized in the drum lid ring lugs,
THEN:

Waste Handler Technician One

[A] **NOTIFY** Supervision for guidance and direction.

[B] **OBTAIN** approval from SOS to cut bolt.

[C] **PREP** parent and area around drum lid ring lugs as directed by RCT.

[D] **PLACE** a piece of hard plastic or Teflon behind the drum ring-bolt assembly and the drum as a barrier to protect from potential nicks or cuts to liners that may be encountered during sawing of drum lid ringbolt.

Waste Handler Technician Two

[E] **SLOWLY CUT** the drum lid ringbolt between the drum ring lugs ½ way through using a hacksaw.

[F] **GO** to Step 6.2[18].

[17] **LOOSEN** the drum closure ringbolt jam nut, as necessary, <u>without loosening the closure ringbolt</u>.

NOTE *The retaining clip (e.g., E-clip) must be an ML-2 component.*

[18] **INSPECT** the four drum lift hinge pins to determine whether all hinge pins have retaining clips (e.g., E-clips) attached to the bottom of the hinge pins and **CHECK** SAT or UNSAT on Attachment 1.

[19] **IF** a retaining clip is missing from a hinge pin,
THEN:

[A] **INSPECT** the hinge pin for damage and **DOCUMENT** deficiencies including hinge pin location in the Comments section of Attachment 1.

[B] **IF** the hinge pin is damaged or the hinge pin does **NOT** completely pass through the hinge,
THEN:

6.2 Parent Drum Loading (continued)

[a] **STOP** the work activity.

[b] **NOTIFY** the WCRRF Operations Center of the hinge pin status.

[c] **REQUEST** the applicable actions from the SOS or designee, and **DOCUMENT** the condition and actions taken in the Comments section of Attachment 1.

[C] **ATTACH** a retaining clip to the hinge pin, ensuring that the clip is properly seated in the groove at the bottom of the hinge pin.

[D] **DOCUMENT** initials, Z number, and date or N/A on Attachment 1 to indicate that the retaining clip was replaced.

[20] **POSITION** the prepared parent drum on the drum lift with the prepared parent drum closure ringbolt accessible for lid removal when the drum closure ring is inside of the WCG.

[21] **CLOSE** and **SECURE** the bellyband on the prepared parent drum, ensuring that the bag-off sleeve does not get caught on the bellyband.

[22] **ENSURE** that the retaining clips are properly seated in the groove at the bottom of the hinge pins.

WARNING

Failure to ensure the Trolley Clamp is positioned next to the WCG prior to lowering or raising the drum lift could lead to equipment damage and personnel injury.

[23] **IF** the Trolley Rail clamp is to be used,
AND is not on the drum rail,
THEN PLACE the trolley rail clamp on the rail and **POSITION** next to the WCG.

[24] **RAISE** the prepared parent drum to the WCG parent drum port using the drum lift pendent, leaving an adequate gap (approximately 12 in.) to attach the bag-off sleeve to the WCG parent drum port.

[25] **BAG ON** the prepared parent drum to the WCG parent drum port in accordance with section 7.1, Parent Drum Bag On, and **RETURN** to the following step.

6.2 Parent Drum Loading (continued)

WARNING

Downward movement of the parent drum could result in the drum bag-off bag separating from the WCG drum port and resulting in the spread of radiological contamination.

[26] **TURN** the drum lift key to OFF, and **REMOVE** the drum lift key, as applicable.

[27] **PLACE** the drum lift key in the key box, as applicable.

[28] **IF** the parent drum is to remain attached to the WCG overnight,
THEN OBTAIN the Environmental and Waste Management Facility Operations-Facility Operations Director (EWMO-FOD) or Designee (i.e., Operations Manager) approval to leave the parent drum attached to the WCG overnight, and **DOCUMENT** the approval on Attachment 1.

[29] **IF** the EWMO-FOD does **NOT** approve leaving a parent drum attached to the WCG overnight,
THEN ENSURE that the parent drum is removed before the end of the work day.

[30] **PROCESS** the waste in the parent drum in accordance with Section 10, WCG Waste Processing.

6.3 Parent Drum Unloading

This sub-section is a stand-alone sub-section and may be performed independently of or in conjunction with other sub-sections.

Waste Handling Technician

[1] **ENSURE** that the prerequisite actions have been completed.

[2] **ENSURE** that the parent drum has been bagged off of the WCG in accordance with Section 7.2, Parent Drum Bag Off.

RCT

[3] **PERFORM** radiological surveys as necessary during the waste container handling evolutions.

6.3 Parent Drum Unloading (continued)

Waste Handling Technician

[4] **IF** radiological contamination is detected,
THEN FOLLOW the instructions of the RCT.

[5] **ENSURE** that the drum lift key has been obtained from the key box.

[6] **ENSURE** that the drum lift key has been inserted, and **TURN** the drum lift key to ON in order to establish power to the drum lift.

WARNING

The drum lift pendant operator is to announce operation of the lift before raising or lowering the drum and all personnel are to stand clear and to the side of drum movement in order to prevent personnel injuries.

[7] **POSITION** a drum dolly to receive the parent drum.

WARNING

Personnel SHALL <u>not</u> place any portion of the body (e.g., hands or arms) under an elevated load in order to prevent serious personal injury.

[8] **LOWER** the parent drum down onto the drum dolly using the drum lift pendent.

[9] **OPEN** the drum bellyband, and **UNLOAD** the parent drum from the drum lift.

[10] **IF** no additional drums are to be loaded with the WCG drum lift,
THEN:

[A] **SECURE** the drum bellyband.

[B] **RAISE** the drum lift to the desired height for stowing using the drum lift pendent.

[C] **TURN** the drum lift key to OFF, and **REMOVE** the drum lift key.

[D] **PLACE** the drum lift key in the key box.

6.3 Parent Drum Unloading (continued)

[11] **TAPE** the bagged off parent drum horsetail using vinyl tape.

[12] **PLACE** a layer of containment (e.g., the cutoff end of the parent drum bagged off bag or piece of plastic) over the drum lid.

[13] **TAPE** the entire parent drum lid using vinyl tape.

NOTE 1 *The RCRA Hazardous Waste Codes of a parent container do not apply to the empty parent container or the empty parent container label when the empty parent container satisfies the RCRA definition of an empty container in 40 CFR 261.7, Residues of Hazardous Waste in Empty Containers.* *http://edocket.access.gpo.gov/cfr_2009/julqtr/pdf/40cfr261.7.pdf.*

NOTE 2 *The following steps may be performed at a time that is operationally convenient.*

[14] **OVERPACK** the empty parent drum in accordance with EP-WCRR-WO-DOP-1197, WCRRF Loading/Unloading SWB or 85-gal Drum.

[15] **MOVE** the empty parent drum to a transportainer in accordance with EP-WCRR-WO-DOP-1199, WCRRF and Building TA-50-69 Waste Container Receipt, Movement, and Transfer.

[16] **ENSURE** that the Inventory Control Personnel have been notified that the empty parent drum has been removed from Building TA-50-69.

7. PERFORMANCE—WCG PARENT DRUM BAG-ON/BAG-OFF OPERATIONS

NOTE 1 *Radiological surveys may be performed as determined necessary [e.g., by an RP representative (e.g., RCT)] anytime during the performance of this procedure.*

NOTE 2 *All manual drum movement will be performed in accordance with Appendix 7, and EP-DIV-Policy-20057, EWMO Health and Safety Policy-Manual Movement.*

7.1 Parent Drum Bag On

This sub-section is a stand-alone sub-section and may be performed independently of or in conjunction with other sub-sections.

Waste Handling Technician

[1] **ENSURE** that the prerequisite actions have been completed.

[2] **WEAR** respiratory protection as required by the applicable RWP.

RCT

[3] **PERFORM** radiological surveys as necessary during the waste container handling evolutions.

Waste Handling Technician

[4] **IF** radiological contamination is detected,
THEN FOLLOW the instructions of the RCT.

[5] **ENSURE** the parent drum has been loaded onto the WCG in accordance with Section 6.2, Parent Drum Loading.

[6] **ENSURE** that the WCG has been wiped down to reduce radiological contamination.

[7] **SET UP** a portable HEPA-filter exhaust system (MAC-21) in order to increase local airflow at the site of the horsetail during the cutting operation.

[8] **REMOVE** the retaining band from the WCG parent drum port bag-off stub.

[9] **VISUALLY INSPECT** the WCG parent drum port bag-off stub for damage (e.g., tears).

7.1 Parent Drum Bag On (continued)

[10] **IF** the WCG parent drum port bag-off stub is damaged (e.g., tears),
THEN:

[A] **REPAIR** the damage (e.g., tears) using vinyl tape.

[B] **REQUEST** an RCT survey for radiological contamination.

[C] **IF** radiological contamination is detected,
THEN FOLLOW the instructions of the RCT.

[11] **SLIDE** the bag-off stub down to the port opening side of the ring closest to the WCG.

[12] **SWIPE** around the WCG parent drum port with a maslin smear, and **REQUEST** an RCT monitor the swipe for radiological contamination.

[13] **IF** radiological contamination is detected,
THEN FOLLOW the instructions of the RCT.

NOTE *The new bag-on bag is attached to the parent drum.*

[14] **SLIDE** the new bag-on bag over the old bag-on bag stub to the inner ring as close as possible to the WCG.

[15] **APPLY** vinyl tape to the new bag-on bag where the retaining band buckle is to be placed.

[16] **SECURE** the new bag-on bag with the retaining band.

[17] **REMOVE** the bag-off stub from the WCG parent drum port, and **DROP** the bag-off stub into the glovebox.

7.1 Parent Drum Bag On (continued)

WARNING

The drum lift pendant operator is to announce operation of the lift before raising or lowering the drum and all personnel are to stand clear and to the side of drum movement in order to prevent personnel injuries.

[18] **ALTERNATELY RAISE** the parent drum and **GUIDE** the bag-on bag to prevent damage to the bag-on bag until the parent drum has been raised to the upper limit switch or until the drum is adequately inserted.

NOTE *The Trolley Rail Clamp is used at the discretion of the PIC, and/or when processing heavy drums to act as a rail stop to restrict forward drum movement when removing heavy items from drum into glovebox.*

[19] **IF** the Trolley Rail Clamp is to be used,
THEN:

[A] **SLIDE** the Trolley Rail Clamp against the drum trolley rail assembly next to the lifting fixture.

[B] **TIGHTEN** the Trolley Rail clamp handle clockwise to secure the clamp against the drum trolley.

7.2 <u>Parent Drum Bag Off</u>

This sub-section is a stand-alone sub-section and may be performed independently of or in conjunction with other sub-sections.

Waste Handling Technician

[1] **ENSURE** that the prerequisite actions have been completed.

[2] **WEAR** respiratory protection as required by the applicable RWP.

RCT

[3] **PERFORM** radiological surveys as necessary during the waste container handling evolutions.

7.2 Parent Drum Bag Off (continued)

Waste Handling Technician

[4] **IF** radiological contamination is detected,
THEN FOLLOW the instructions of the RCT.

[5] **IF** Trolley Rail Clamp was used,
THEN LOOSEN handle counterclockwise and **SLIDE** the Trolley Rail Clamp away from the drum trolley (towards the WCG).

[6] **PLACE** the drum lid and drum closure ring assembly on the parent waste drum.

[7] **IF** the parent drum closure ring **CANNOT** be properly attached to the parent drum,
AND the parent drum is empty,
THEN:

[A] **AFFIX** the closure ring, if possible, to the parent drum and **TAPE** the parent drum lid onto the drum using vinyl tape or equivalent.

[B] **GO** to Step 7.2[11].

NOTE *The removal of a parent drum from the WCG which contains waste material must be performed as a critical lift.*

[8] **IF** the parent drum closure ring **CANNOT** be properly attached to the parent drum,
AND the parent drum contains waste material,
THEN:

[A] **STOP** the activity and place waste material in a safe configuration (e.g., cover with a fire blanket).

[B] **NOTIFY** supervision and the WCRRF Operations Center of the discrepancy and **REQUEST** the applicable actions.

[9] **ENSURE** that the drum closure ringbolt jam nut is tightened against the non-threaded lug of the drum closure ring.

[10] **ENSURE** that duct tape has been placed on the drum closure ringbolt in order to prevent damage to the bag-off sleeve.

[11] **ENSURE** that the WCG has been wiped down to reduce radiological contamination.

7.2 Parent Drum Bag Off (continued)

[12] **SET UP** a portable HEPA-filter exhaust system (MAC-21) to increase local airflow at the site of the horsetail during the cutting operation.

[13] **OBTAIN** the drum lift key from the key box, as applicable.

[14] **INSERT** the drum lift key, and **TURN** the drum lift key to ON in order to establish power to the drum lift, as applicable.

WARNING

The drum lift pendant operator is to announce operation of the lift before raising or lowering the drum and all personnel are to stand clear and to the side of drum movement in order to prevent personnel injuries.

[15] **LOWER** the parent drum sufficiently to create a horsetail using the drum lift pendent.

[16] **INSPECT** the bag-off bag for damage (e.g., tears).

[17] **IF** bag-off bag is damaged (e.g., tears),
THEN:

[A] **REPAIR** the damage (e.g., tears) using vinyl tape.

[B] **REQUEST** an RCT survey for radiological contamination.

[C] **IF** radiological contamination is detected,
THEN FOLLOW the instructions of the RCT.

[18] **MIST** inside of the bag-off bag with spray cleaner and **RUB** the bag-off bag together to ensure the complete coverage of the spray cleaner in order to control contamination.

[19] **SQUEEZE** as much air as possible out of the bag-off bag.

[20] **GATHER** the bag-off bag and **COMPRESS** the bag-off bag in order to create a horsetail approximately 8 to 10 in. long.

[21] **TIGHTLY SECURE** the horsetail using one layer of filament and two layers of vinyl tape.

7.2 Parent Drum Bag Off (continued)

[22] **FIRMLY ATTACH** two binding ties near the center of the horsetail, approximately 6 in. apart.

[23] **IF** bagging off the last parent drum for the work day,
THEN FIRMLY ATTACH a second binding tie approximately 2 in. from the center of the horsetail on the WCG side of the horsetail.

NOTE *The excess part of the binding tie protruding through the binding tie latch is not to be cut off.*

[24] **COVER** the attached binding ties with vinyl tape.

Waste Handling Technician Three

[25] **POSITION** the horsetail cutters between the binding ties of the horsetail.

Waste Handling Technician One

[26] **GRASP** the top of horsetail.

Waste Handling Technician Two

[27] **GRASP** the bottom of horsetail.

WARNING

Extremities SHALL not be placed inside the jaws of the cutting tool in order to prevent personnel injury due to pinching.

Waste Handling Technician Three

[28] **CUT** the horsetail between the binding ties.

Waste Handling Technician One and Two

[29] **SIMULTANEOUSLY COVER** the cut stubs of the bag-off bag with vinyl tape.

[30] **ENSURE** that the cut-stubs have been covered with a final layer of vinyl tape, as directed by an RCT.

7.2 Parent Drum Bag Off (continued)

NOTE 1 *Used cheesecloth are to be disposed of as compactable waste or in an empty daughter as waste added in process to be bagged on the WCG.*

NOTE 2 *The following step may be performed out of sequence.*

Waste Handling Technician Three

[31] **WIPE** down the cutters used to cut the horsetail, place the cutters in a holder, and place the cutters in the designated staging area.

NOTE *Used cheesecloth are to be disposed of as compactable waste or in an empty daughter as waste added in process to be bagged on the WCG*

Waste Handling Technician

[32] **DECONTAMINATE**, as necessary, in accordance with RCT instructions.

[33] **REMOVE** the empty parent drum from the WCG drum lifting device in accordance with Section 6.3, Parent Drum Unloading.

8. PERFORMANCE—WCG DAUGHTER DRUM, BAGPORT, OR GLOVEPORT BAG-ON/BAG-OFF OPERATIONS

NOTE 1 *Radiological surveys may be performed as determined necessary [e.g., by an RP representative (e.g., RCT)] anytime during the performance of this procedure.*

NOTE 2 *All manual drum movement will be performed in accordance with Appendix 7, and EP-DIV-Policy-20057, EWMO Health and Safety Policy-Manual Movement.*

8.1 Bag On Daughter Drum, Bagport, or Gloveport

This sub-section is a stand-alone sub-section and may be performed independently of or in conjunction with other sub-sections.

NOTE *This section provides instructions for bagging onto the WCG at a daughter drum port, bagport, or gloveport.*

Waste Handling Technician

[1] **ENSURE** that the prerequisite actions have been completed.

[2] **IF** a daughter drum is to be bagged onto the WCG,
THEN ENSURE that the daughter drum has been prepared in accordance with EP-WCRR-WO-DOP-0221.

[3] **WEAR** respiratory protection as required by the applicable RWP.

RCT

[4] **PERFORM** radiological surveys as necessary during the waste container handling evolutions.

Waste Handling Technician

[5] **IF** radiological contamination is detected,
THEN FOLLOW the instructions of the RCT.

[6] **ENSURE** that the WCG has been wiped down to reduce radiological contamination.

[7] **IF** directed by an RCT to establish a portable HEPA-filter exhaust system,
THEN SET UP a portable HEPA-filter exhaust system (MAC-21)in order to increase the local airflow at the site of the horsetail during the cutting operation.

[8] **REMOVE** the retaining band from the bag-off stub.

8.1 Bag On Daughter Drum, Bagport, or Gloveport (continued)

[9] **VISUALLY INSPECT** under the retaining band of the previous drum/bagport/gloveport bag-off stub for damage (e.g., tears).

[10] **IF** the previous drum/bagport/gloveport bag-off stub is damaged (e.g., tears),
THEN SEAL the damaged area with vinyl tape.

[11] **SLIDE** the bag-off stub down to the port opening side of the ring closest to the WCG.

[12] **SWIPE** around the port with a maslin smear, and **REQUEST** an RCT monitor the swipe for radiological contamination.

[13] **IF** radiological contamination is detected,
THEN FOLLOW the instructions of the RCT.

[14] **SLIDE** the new bag-on bag over the old bag-on bag stub to the inner ring as close as possible to the WCG.

[15] **ADHERE** vinyl tape to the new bag-on bag where the retaining band buckle is to be placed.

[16] **SECURE** the new bag with the retaining band.

[17] **REMOVE** the bag-off bag stub and drop the bag-off bag stub into the daughter drum/bagport bag/gloveport bag, as applicable.

[18] **IF** bagging on a daughter drum,
THEN:

[A] **MOVE** the drum from the drum dolly to the vertical lift table.

[B] **MANUALLY RAISE** the drum to the appropriate height.

8.2 Bag Off Daughter Drum

This sub-section is a stand-alone sub-section and may be performed independently of or in conjunction with other sub-sections.

NOTE *This section provides instructions for bagging off a daughter drum from the WCG.*

Waste Handling Technician

[1] **ENSURE** that the prerequisite actions have been completed.

[2] **WEAR** respiratory protection as required by the applicable RWP.

RCT

[3] **PERFORM** radiological surveys as necessary during the waste container handling evolutions.

Waste Operator

[4] **IF** radiological contamination is detected,
THEN FOLLOW the instructions of the RCT.

[5] **ENSURE** that the WCG has been wiped down to reduce radiological contamination.

[6] **SET UP** a portable HEPA-filter exhaust system (MAC-21) in order to increase the local airflow at the site of the horsetail during the cutting operation.

[7] **MANUALLY LOWER** the vertical lift table.

[8] **INSPECT** the bag-off bag for damage (e.g., tears).

[9] **IF** the bag-off bag is damaged (e.g., tears),
THEN:

[A] **REPAIR** the damage (e.g., tears) using vinyl tape.

[B] **REQUEST** an RCT survey for radiological contamination.

[C] **IF** radiological contamination is detected,
THEN FOLLOW the instructions of the RCT.

8.2 Bag Off Daughter Drum (continued)

WARNING

Proper lifting techniques and buddy system SHALL be used when moving a daughter drum from the lift table to the drum dolly in order to prevent personnel injury and to prevent separating the daughter drum bag-off bag from the WCG daughter drum port.

NOTE *A VersaLift may be used to assist the lifting of a drum off of the vertical lift table.*

[10] **MOVE** the drum from the vertical lift table to a drum dolly.

[11] **MIST** inside of the bag-off bag with spray cleaner and **RUB** the bag-off bag together to ensure the complete coverage of the spray cleaner in order to control contamination.

[12] **SQUEEZE** as much air as possible out of the bag-off bag.

[13] **GATHER** the bag-off bag.

[14] **ROTATE** the drum <u>or</u> **COMPRESS** the bag-off bag (as applicable) in order to create a horsetail approximately 8 to 10 in. long.

[15] **TIGHTLY SECURE** the horsetail using one layer of filament and two layers of vinyl tape.

[16] **FIRMLY ATTACH** two binding ties near the center of the horsetail, approximately 6 in. apart.

NOTE *The excess part of the binding tie protruding through the binding tie latch is <u>not</u> to be cut off.*

[17] **COVER** the attached binding ties with vinyl tape.

Waste Handling Technician Three

[18] **POSITION** the horsetail cutters between the binding ties of the horsetail.

Waste Handling Technician One

[19] **GRASP** top of horsetail.

8.2 Bag Off Daughter Drum (continued)

Waste Handling Technician Two

[20] **GRASP** the bottom of the horsetail.

WARNING

Extremities SHALL <u>not</u> be placed inside the jaws of the cutting tool in order to prevent personnel injury due to pinching.

Waste Handling Technician Three

[21] **CUT** the horsetail between the binding ties.

Waste Handling Technician One and Two

[22] **SIMULTANEOUSLY COVER** the cut stubs of the bag-off bag with vinyl tape.

[23] **ENSURE** that the cut-stubs have been covered with a final layer of vinyl tape, as directed by an RCT.

NOTE 1 *Used cheesecloth are to be disposed of as compactable waste or in an empty daughter as waste added in process to be bagged on the WCG*

NOTE 2 *The following step may be performed out of sequence.*

Waste Handling Technician Three

[24] **WIPE** down the cutters used to cut the horsetail, place the cutters in a holder, and place the cutters in the designated staging area.

Waste Handling Technician

[25] **IF** the bag-off bag has a filter that is covered with tape,
THEN:

[A] **REMOVE** the tape from bag filter.

[B] **REQUEST** an RCT survey for radiological contamination.

[C] **IF** radiological contamination is detected,
THEN FOLLOW the instructions of the RCT.

8.2 Bag Off Daughter Drum (continued)

[26] **IF** a POC was bagged off of the WCG,
THEN GO to Step 10.2[13].

NOTE 1 *Waste containers with liquids (any amount or configuration) that have not been solidified (absorbed) must be managed on secondary containment pallets and have a FREE LIQUID label affixed.*

NOTE *All parent drum RCRA Hazardous Waste Codes are not assigned to a daughter drum when the reason (item) for assigning a RCRA Hazardous Waste Code to the parent drum has not been placed into the daughter drum. The WMC can assist with assigning the appropriate RCRA Hazardous Waste Codes to a drum.*

[27] **CLOSE** the daughter drum in accordance with EP-WCRR-WO-DOP-0221.

[28] **ENSURE** that the Inventory Control Personnel have been notified that daughter drums and an empty parent drum have been generated in Building TA-50-69.

9. PERFORMANCE—ITEM BAG-IN/BAG-OUT OPERATIONS

NOTE *Radiological surveys may be performed as determined necessary [e.g., by an RP representative (e.g., RCT)] anytime during the performance of this procedure.*

9.1 WCG Item Bag-Out

This sub-section is a stand-alone sub-section and may be performed independently of or in conjunction with other sub-sections.

Waste Handling Technician

[1] **ENSURE** that the prerequisite actions have been completed.

[2] **WEAR** respiratory protection as required by the applicable RWP.

RCT

[3] **PERFORM** radiological surveys as necessary during the waste container handling evolutions.

Waste Handling Technician

[4] **IF** radiological contamination is detected,
THEN FOLLOW the instructions of the RCT.

[5] **ENSURE** that a portable CAM is placed in the vicinity of the filtered bagout bag during WCG operations as directed by RP-1.

[6] **IF** a bag is required on the WCG port,
THEN:

[A] **ENSURE** that the WCG has been wiped down to reduce radiological contamination.

[B] **SET UP** a portable HEPA-filter exhaust system (MAC-21) and elephant trunk as close as possible to the filtered bagout bag in order to increase the local airflow at the site of the horsetail during the cutting operation.

NOTE *Glovebox negative pressure **SHALL** be used to the extent possible in order to remove excess air from the filtered bag-out bag during bagout operations.*

[C] **REMOVE** the retaining band from the drum/bagport/gloveport bag-out stub.

9.1 WCG Item Bag-Out (continued)

[D] **VISUALLY INSPECT** under the retaining band of the previous drum/bagport/gloveport bag-out stub for damage (e.g., tears).

[E] **IF** the previous drum/bagport/gloveport bag-out stub is damaged (e.g., tears), **THEN SEAL** the damaged area with vinyl tape.

[F] **SLIDE** the new bag-on bag over the old bag-on bag stub to the inner ring as close as possible to the WCG.

[G] **SWIPE** around the port with a maslin smear, and **REQUEST** an RCT monitor the swipe for radiological contamination.

[H] **IF** radiological contamination is detected,
THEN FOLLOW the instructions of the RCT.

[I] **SLIDE** the new bag-on bag over the old bag-on bag stub to the inner ring as close as possible to the WCG.

[J] **ADHERE** vinyl tape to the new bag-on bag where the retaining band buckle is to be placed.

[K] **SECURE** the new bag-on bag with the retaining band.

[L] **REMOVE** the bag-out bag stub and drop the bag-out bag stub into the daughter drum/bagport bag/gloveport bag, as applicable.

[7] **ENSURE** that the WCG has been wiped down to reduce radiological contamination.

[8] **ENSURE** a portable HEPA-filter exhaust system (MAC-21) and elephant trunk are set up as close as possible to the filtered bagout bag in order to increase the local airflow at the site of the horsetail during the cutting operation.

[9] **SLIDE** the item to be bagged out to the end of the bag-out bag.

[10] **INSPECT** the bag-out bag for damage (e.g., tears).

9.1 WCG Item Bag-Out (continued)

[11] **IF** the bag-out bag is damaged (e.g., tears),
THEN:

[A] **REPAIR** the damage (e.g., tears) using vinyl tape.

[B] **REQUEST** an RCT survey for radiological contamination.

[C] **IF** radiological contamination is detected,
THEN FOLLOW the instructions of the RCT.

[12] **MIST** inside of the bag-out bag with spray cleaner and **RUB** the bag-out bag together to ensure the complete coverage of the spray cleaner in order to control contamination.

[13] **SQUEEZE** as much air as possible out of the bag-out bag.

[14] **GATHER** the bag-out bag.

[15] **ROTATE** the drum <u>or</u> **COMPRESS** the bag-out bag (as applicable) in order to create a horsetail approximately 8 to 10 in. long.

[16] **TIGHTLY SECURE** the horsetail using one layer of filament and two layers of vinyl tape.

[17] **ENSURE** that the horsetail is located far enough away from the filtered bagout bag to avoid creasing, folding, or otherwise challenging the integrity of the filter.

[18] **FIRMLY ATTACH** two binding ties near the center of the horsetail, approximately 6 in. apart.

[19] **IF** bagging out the last item for the work day,
THEN FIRMLY ATTACH a second binding tie approximately 2 in. from the center of the horsetail on the WCG side of the horsetail.

NOTE *The excess part of the binding tie protruding through the binding tie latch tie is <u>not</u> to be cut off.*

[20] **COVER** the attached binding ties with vinyl tape.

9.1 WCG Item Bag-Out (continued)

Waste Handling Technician Three

[21] **POSITION** the horsetail cutters between the binding ties of the horsetail.

Waste Handling Technician One

[22] **GRASP** top of horsetail.

Waste Handling Technician Two

[23] **GRASP** bottom of horsetail.

WARNING

Extremities SHALL <u>not</u> be placed inside the jaws of the cutting tool in order to prevent personnel injury due to pinching.

Waste Handling Technician Three

[24] **CUT** the horsetail between the binding ties.

Waste Handling Technician One and Two

[25] **SIMULTANEOUSLY COVER** the cut stubs of the bag-out bag with vinyl tape.

[26] **ENSURE** that the cut-stubs have been covered with a final layer of vinyl tape, as directed by an RCT.

NOTE 1 *Used cheesecloth are to be disposed of as compactable waste or in an empty daughter as waste added in process to be bagged on the WCG*

NOTE 2 *The following step may be performed out of sequence.*

Waste Handling Technician Three

[27] **WIPE** down the cutters used to cut the horsetail, and **PLACE** the cutters in a holder, and **PLACE** the cutters in the designated staging area.

Waste Handling Technician

[28] **IF** the bag-out bag has a filter that is covered with tape,
THEN:

[A] **REMOVE** the tape from bag filter.

9.1 WCG Item Bag-Out (continued)

[B] **REQUEST** an RCT survey for radiological contamination.

[C] **IF** radiological contamination is detected,
THEN FOLLOW the instructions of the RCT.

9.2 WCG Introductory Port

This sub-section is a stand-alone sub-section and may be performed independently of or in conjunction with other sub-sections.

NOTE *This sub-section provides instructions for introducing items into the WCG.*

WARNING

Items are not to be removed from the WCG using the airlock since items placed in the airlock from the interior of the WCG are possibly radiologically contaminated.

Waste Handling Technician

[1] **ENSURE** that the prerequisite actions have been completed.

[2] **PREPARE** the area in accordance with RCT instructions.

[3] **WEAR** respiratory protection as required by the applicable RWP.

RCT

[4] **PERFORM** radiological surveys as necessary during the waste container handling evolutions.

Waste Handling Technician

[5] **IF** radiological contamination is detected,
THEN FOLLOW the instructions of the RCT.

WARNING

Both WCG airlock doors are to remain closed until they must be opened to introduce an item into the WCG in order to prevent releasing radiological contamination out of the WCG.

[6] **ENSURE** that both WCG Introductory Port doors are securely closed.

9.2 WCG Introductory Port (continued)

[7] **OPEN** the outer WCG Introductory Port door.

WARNING

Items are to be placed inside of the WCG airlock in a manner that does <u>not</u> disturb the WCG airlock surfaces in order to mitigate the spread of radiological contamination.

[8] **GENTLY PLACE** the item to be introduced into the WCG airlock.

[9] **CLOSE** the outer WCG Introductory Port door.

[10] **OPEN** the inner WCG Introductory Port door.

[11] **REMOVE** the item from the WCG Introductory Port and **PLACE** the item in the WCG.

[12] **CLOSE** the inner WCG Introductory Port door.

[13] **VERIFY** that both WCG Introductory Port doors are securely closed.

10. PERFORMANCE—WCG WASTE PROCESSING

This section is a stand-alone section and may be performed independently of or in conjunction with other Performance sections.

NOTE 1 *Radiological surveys may be performed as determined necessary [e.g., by an RP representative (e.g., RCT)] anytime during the performance of this procedure.*

NOTE 2 *The WCATS desktop application WCRR-REMED is performed in conjunction with this section.*

NOTE 3 *All manual drum movement will be performed in accordance with Appendix 7, Manual Drum Movements Special Instructions and EP-DIV-Policy-20057, EWMO Health and Safety Policy-Manual Movement.*

10.1 WCG Waste Processing Preparation

Waste Handling Technician

[1] **ENSURE** that the prerequisite actions have been completed.

[2] **ENSURE** that the battery charger for the cordless drill in the WCG has been unplugged.

[3] **ENSURE** that the parent drum has been bagged onto the WCG in accordance with Section 7.1, Parent Drum Bag On.

NOTE *The following step may be performed out of sequence.*

[4] **ENSURE** that the daughter drums have been bagged onto the WCG in accordance with Section 8.1, Bag On Daughter Drum, Bagport, or Gloveport, and **RECORD** the following information on Attachment 1:

- Daughter Drum Number
- Daughter Drum Filter Number
- Daughter Drum Bag Filter Number
- Daughter Drum Purchase Order Number

[5] **IF** VE activities are to occur,
THEN ENSURE that CCP-TP-113, Standard Contact Handled Waste Visual Examination, is performed concurrently with this procedure.

10.1 WCG Waste Processing Preparation (continued)

NOTE *If the drum lid ringbolt was pre-cut, then the drum lid ringbolt may require the use of an impact wrench or other hand tools to remove the drum lid ringbolt.*

[6] **SLOWLY REMOVE** the parent drum lid, being prepared to close the lid if there are unexpected conditions.

[7] **EXAMINE** the contents of the parent drum, and **DETERMINE** whether the contents of the drum have any unexpected items.

[8] **IF** any unexpected items are present in the parent drum,
THEN:

[A] **CLOSE** the parent drum.

[B] **NOTIFY** supervision and the WCRRF Operations Center of the discrepancy, and **REQUEST** the applicable actions.

[C] **DOCUMENT** the discrepancy and applicable actions in the Comments section of Attachment 1.

NOTE *Placing the parent drum lid over the waste items being surveyed is a simulation of the waste items being inside of a drum and provides a representation of the expected dose rate outside of the drum in order to determine whether the dose rate may exceed 190 mrem/hr and is the desired survey method.*

[9] **ENSURE** that a drum lid is placed over the waste items to be surveyed, as necessary, and **REQUEST** an RCT perform radiological surveys of the items being removed from the parent drum.

NOTE 1 *Unvented, Sealed waste packages are those waste packages that have a positive locking mechanism, such as a gasket with drum closure ring or a screw top lid (with no other openings) to seal the lid to the waste package.*

[10] **IF** the parent drum contains an unvented, sealed waste package,
THEN:

[A] **RECORD** the parent drum identification number on Attachment 3, WCRRF WCG Breaching (Opening) Unvented, Sealed Waste Packages.

10.1 WCG Waste Processing Preparation (continued)

NOTE *Multiple copies of Attachment 3 may be required for parent drums containing more than four unvented, sealed waste packages that are 5- to 30 gal. Only a single copy of Attachment 3 is necessary for parent drums with multiple unvented, sealed waste packages that are less than 5 gal.*

[B] **CHECK** (√) the applicable box on Attachment 3 to indicate the type of unvented, sealed waste package (e.g., Metal 5- to 30-gal, Non-metallic 5- to 30-gal, or < 5-gal).

[C] **($) ENSURE** that non-sparking tools are available for use in the WCG, and **CHECK** (√) YES or NO on Attachment 3. (SAC 5.10.1.6.1).

NOTE *Administrative Control Lock Log Sheet form 10.4 of EP-DIV-AP-0117* ***SHALL*** *be completed anytime the lock is placed or removed for WCG receptacles lockout.*

[D] **($) ENSURE** that the WCG electrical receptacles have been de-energized and locked open/off with an administrative lock, and **CHECK (√)** SAT or UNSAT on Attachment 3, and **MAKE** an entry on the Administrative Control Log Sheet to document that the WCG electrical receptacles are locked open/off. (SAC 5.10.1.6.2)

NOTE 1 *A proper ground requires that all ends of the grounding strap be firmly attached to a clean-bare metal surface.*

NOTE 2 *Attachment 4, WCRRF WCG Breaching (Opening) Metal 5- to 30-gal Unvented-Sealed Waste Packages Surveillance, is completed to document the operator and independent verifier installing the grounding devices within TA-50-69.*

NOTE 3 *The following step is to be performed by an operator and then independently verified by a second operator.*

NOTE 4 *Separate copies of Attachment 4 are required for each waste package.*

Waste Handling Technician

[E] **IF** the waste package is a METAL 5- to 30-gal waste package,
THEN:

[a] **RECORD** the parent drum identification number on Attachment 4.

10.1 WCG Waste Processing Preparation (continued)

[b] **($) ENSURE** that the parent drum has been properly grounded to the WCG using a grounding strap in the WCG, and **CHECK** (√) SAT or UNSAT on Attachment 4 to document that the grounding strap was attached. (SR 4.6.1)

Independent Verifier

[c] **VERIFY** that the parent drum has been properly grounded to the WCG using a grounding strap in the WCG, and **CHECK** (√) SAT or UNSAT on Attachment 4.

Waste Handling Technician

[11] **IF** processing a parent drum containing an unvented, sealed 5- to 30-gal waste package, **THEN:**

WARNING

Unvented, sealed waste packages may contain a concentration of hydrogen gas and are to be handled or identified in this document using grounding devices and lid restraints in order to minimize any possible adverse effects from potentially releasing hydrogen.

NOTE *Drum lid restraints that are not in use are to be stored in such a matter that the drum lid restraints are protected from degradation (e.g., in a daughter drum).*

[A] **($) VISUALLY** inspect the waste package lid restraint for the following, and **DOCUMENT** the results of the inspection on Attachment 3:

- Degradation (e.g., no indication of cracked parts, missing fasteners, loose or frayed parts, excessive wear, or unusual deformation) (SAC 5.10.1.5.1)
- Missing or illegible identification
- Melting or charring
- Broken or worn stitching in load bearing splices
- Knots in any part of the drum lid restraint
- Discoloration and brittle or stiff areas

[B] **IF** the visual inspection of a drum lid restraint is unsatisfactory, **THEN:**

[a] **SEGREGATE** the unsatisfactory drum lid restraint from the other restraints, and **IDENTIFY** the restraint as unusable.

10.1 WCG Waste Processing Preparation (continued)

[c] **GO** to Step 10.1[11][A].

[C] **($) ATTACH** the waste package lid restraint to the waste package and verify proper installation, and **CHECK** SAT, UNSAT, or N/A that the lid restraint has been attached on Attachment 3. (SAC 5.10.1.5.1)

NOTE *A proper ground requires that all ends of the grounding strap be firmly attached to a clean-bare metal surface.*

[D] **($) IF** the waste package is a METAL 5- to 30-gal waste package,
THEN:

[a] **GROUND** the metal waste package using a grounding strap in the WCG, and **CHECK** (√) SAT or UNSAT on Attachment 4 to document that the grounding strap was attached. (LCO 3.6 and SR 4.6.1)

Independent Verifier

[b] **VERIFY** that the grounding strap is attached and **CHECK** (√) SAT or UNSAT on Attachment 4.

[c] **RECORD** the following information, Name, Signature, Z Number and Date on Attachment 4.

Waste Handling Technician

[d] **($) IF** the grounding strap was attached to the waste package or parent drum, **AND** the grounding strap becomes detached from either the waste package or the parent drum during the opening of the waste package,
THEN ENTER the Actions of LCO 3.6, and **NOTIFY** the WCRRF Operations Center. (LCO 3.6)

[E] **IF** the waste package lid **CANNOT** be removed and the waste package is to be vented by drilling a hole into the waste container,
THEN:

[a] **NOTIFY** supervision of need to vent container using a drill.

[b] **OBTAIN** a non-sparking (brushless) battery powered hand drill with an approximate 1/4 in. bit installed.

10.1 WCG Waste Processing Preparation (continued)

WARNING

Shavings from the drilling process may be hot and could potentially initiate a fire involving the items inside of the WCG.

[c] **ENSURE** the drill speed is set to slow speed and **DOCUMENT** on Attachment 4.

[d] **IF** sparking is observed during the drilling of the waste container, **THEN:**

1. **STOP** drilling operations.
2. **NOTIFY** the WCRRF Operations Center and SOS for guidance and direction.

[e] **DRILL** a hole through the container in a location provided by supervision.

WARNING

The WCG electrical receptacles are not to be re-energized until 30 min. has elapsed since the unvented waste package was opened in order to prevent the possibility of a flammable gas mixture deflagration.

NOTE *Glovebox operations may continue after opening a less than 5 gal-unvented sealed waste package while waiting the required 30 min. before re-energizing the WCG electrical receptacles.*

[f] **DOCUMENT** time when container was vented on Attachment 3.

[g] **ENSURE** that all WCG operations have been suspended.

[h] **($) WHEN** 30 min. has elapsed, **THEN DOCUMENT** the time and that greater than or equal to 30 min. has elapsed since the waste package was vented on Attachment 3. (SAC 5.10.1.5.2 and SAC 5.10.1.6.3)

10.1 WCG Waste Processing Preparation (continued)

[i] **CHECK** (√) SAT, UNSAT or N/A when the time is ≥ 30 min. on Attachment 3.

[j] **RESUME** operations as directed by supervision.

[k] **GO** to Step 10.1[14].

[F] **IF** the waste package lid **CANNOT** be removed and the waste package is to be vented using a non-sparking tools (e.g., punch and hammer),
THEN:

[a] **NOTIFY** supervision of need to vent the waste container.

[b] **VENT** container by piercing a hole in container using a non-sparking tools (e.g., punch and hammer).

[c] **DOCUMENT** time when waste container was vented on Attachment 3.

[d] **ENSURE** that all WCG operations have been suspended.

[e] **($) WHEN** 30 min. has elapsed,
THEN DOCUMENT the time and that greater than or equal to 30 min. has elapsed since the waste package was vented on Attachment 3. (SAC 5.10.1.5.2 and SAC 5.10.1.6.3)

[f] **CHECK** (√) SAT, UNSAT, or N/A when the time is ≥ 30 min. on Attachment 3.

[g] **RESUME** operations as directed by supervision.

[h] **GO** to Step 10.1[14].

10.1 WCG Waste Processing Preparation (continued)

[12] **IF** processing a parent drum containing an unvented, sealed waste packages of less than 5 gal,
THEN:

[A] **IF** the waste package lid **CANNOT** be removed and the waste package is to be vented by drilling a hole into the waste container,
THEN:

[a] **NOTIFY** supervision of sealed container needed to be drilled.

[b] **OBTAIN** a non-sparking (brushless) battery powered hand drill with an approximate 1/4 in. bit installed.

WARNING

Shavings from the drilling process may be hot and could potentially initiate a fire involving the items inside of the WCG.

[c] **ENSURE** the drill speed is set to slow speed and **DOCUMENT** on Attachment 4.

[d] **IF** sparking is observed at anytime during the drilling of the waste container,
THEN:

1. **STOP** drilling operations.

2. **NOTIFY** the WCRRF Operations Center and SOS for guidance and direction.

[e] **DRILL** a hole through the container in a location provided by supervision.

10.1 WCG Waste Processing Preparation (continued)

WARNING

The WCG electrical receptacles are not to be re-energized until 30 min. has elapsed since the unvented waste package was opened in order to prevent the possibility of a flammable gas mixture deflagration.

NOTE *Glovebox operations may continue after opening a less than 5 gal-unvented sealed waste package while waiting the required 30 min. before re-energizing the WCG electrical receptacles.*

[f] **DOCUMENT** time when waste container was vented on Attachment 3.

[g] **ENSURE** that all WCG operations have been suspended

[h] **($) WHEN** 30 min. has elapsed,
THEN DOCUMENT the time and that greater than or equal to 30 min. has elapsed since the waste package was vented on Attachment 3.
(SAC 5.10.1.5.2 and SAC 5.10.1.6.3)

[i] **CHECK** (√) SAT, UNSAT, or N/A when time is ≥ 30 min. on Attachment 3.

[j] **RESUME** operations as directed by supervision.

[k] **ENSURE** container possesses no free liquids.

[l] **GO** to Step 10.1[17].

[13] **OPEN** the waste package and **REMOVE** the waste package lid.

[14] **REMOVE** the lid restraint and **ENSURE** that the lid restraint and waste package lid, as applicable, are placed out of the way of the vented waste package.

[15] **($) RECORD** the time that the lid restraint and waste package lid were removed from the waste package on Attachment 3. (SAC 5.10.1.5.2 and SAC 5.10.1.6.3)

[16] **REMOVE** the grounding straps from the <u>metal</u> waste package, as applicable.

10.1 WCG Waste Processing Preparation (continued)

[17] **REMOVE** the grounding straps from the parent drum.

[18] **($) IF** directed by supervision,
THEN REMOVE the administrative lock from the WCG electrical receptacles, and **DOCUMENT** that 30 minutes has elapsed before re-energizing the WCG electrical receptacles. (SAC 5.10.1.6.3)

[19] **IF** sparking is observed at anytime during the processing of waste material,
THEN:

[A] **PLACE** a fire barrier (e.g., MET-L-X or fire blanket) over the suspect waste material.

[B] **STOP** waste processing.

[C] **ENSURE** that a Fire Watch has been stationed at the WCG to continuously monitor the waste in the WCG, and **CHECK** (√) YES or NO on Attachment 1.

NOTE *The following personnel are notified by the WCRRF Operations Center:*

- *OM or designee*
- *Solid Waste Regulatory Compliance Group*
- *Industrial Hygienist*
- *Cognizant System Engineer*
- *Radiation Protection*

[D] **NOTIFY** the WCRRF Operations Center/Shift Operations Manager of the discrepancy, and **DOCUMENT** the notification and discrepancy in the Comments section of Attachment 1:

[E] **IF** the suspect item is to be bagged out of the WCG,
THEN BAG OUT the suspect item in accordance with Section 9.1, WCG Item Bag-Out.

[F] **PLACE** the suspect item in an empty daughter drum.

[G] **IF** the daughter drum is attached to the WCG,
THEN BAG OFF the daughter drum in accordance with Section 8.2, Bag Off Daughter Drum.

[H] **CLOSE** the daughter drum in accordance with EP-WCRR-WO-DOP-0221.

10.1 WCG Waste Processing Preparation (continued)

[20] **IF** a shielded container (e.g., lead lined) is in the parent drum,
THEN:

WARNING

Personnel are to avoid the high radiation exposure area in front of a shielded container that has been accessed in order to prevent increased exposure to radiation due to radiation streaming from the open portion of the shielded container.

[A] **ENSURE** that personnel in Building TA-50-69 are notified that a shielded container is to be accessed and that they are positioned such that when the shielded container is accessed the radiation streaming from the shielded container is directed away from personnel.

[B] **ACCESS** the shielded container contents without removing the contents, and **REQUEST** an RCT to perform a radiological survey to determine the radiation levels.

[C] **IF** the radiation level exceeds an RWP limit,
THEN:

[a] **ENSURE** that the shielding has been replaced, and **CLOSE** the shielded container.

[b] **REQUEST** an RCT perform a radiological survey on the closed shielded container to determine the radiation levels.

[c] **IF** the closed, shielded container radiation level exceeds the RWP limits,
THEN:

1. **ENSURE** that all waste material is in a safe configuration.

2. **STOP** the work activity.

3. **COMPLY** with the RCT's instructions to minimize radiological exposure.

4. **NOTIFY** the WCRRF Operations Center of the condition, and **REQUEST** the applicable actions.

10.1 WCG Waste Processing Preparation (continued)

NOTE *Waste placed into daughter drums must be from a single parent drum except for the collection drum (pressurized container or aerosol can).*

[d] **IF** the waste material is **NOT** to be processed at this time as directed by supervision,
THEN:

1. **PLACE** the waste items from the parent drum into a daughter drum.

2. **BAG OFF** the parent and daughter drums in accordance with the applicable section of this procedure.

3. **IF** a Fire Watch was stationed,
THEN ENSURE that all INVENTORY is in a safe configuration, and **SECURE** the Fire Watch, and **CHECK** (√) YES or NO on Attachment 1.

4. **NOTIFY** the WCRRF Operations Center of the waste disposition.

NOTE 1 *Continued operation may require the work activity to be paused in order to allow operators and supervision to evaluate the condition to determine the necessary response to the situation (e.g., re-enter area under a different RWP or prepare a POC to accept the waste material).*

NOTE 2 ***($)*** *A STATIONARY FIRE WATCH is required in the OPERATION and WARM STANDBY MODE when the WCG INVENTORY is greater than 300 PE-Ci equivalent combustible waste. (AC 5.2.3)*

[D] **WHEN** the appropriate actions have been determined,
THEN GO to Step 10.1[15].

10.1 WCG Waste Processing Preparation (continued)

[22] **IF** any of the following items are identified during the processing of waste:

- Lead-elemental (e.g., circuit boards)
- Mercury-elemental (e.g., thermometers or switches)
- Batteries (e.g., lead/acid, nickel cadmium, or lithium)
- Light bulbs (i.e., incandescent or fluorescent)
- PCB items (e.g., ballasts, capacitors, or transformers)
- Liquids (any amount not remediated or absorbed)

THEN RECORD the item descriptive information (item type, size, trade name, if available) in the Comments section of Attachment 1.

NOTE 1 *The WMC can assist with assigning the appropriate RCRA Hazardous Waste Codes to the daughter drum.*

NOTE 2 *The following step may be performed when operationally convenient but must be completed the same day as the identification of the item.*

[C] **ENSURE** that the appropriate RCRA Hazardous Waste Codes is assigned to the drum that receives the item (e.g., daughter drum or collection drum) and **CONFIRM** with the WCRRF Inventory control person.

WARNING

Glass sample vials may contain residual granular plutonium hydride which can generate sparks when subjected to mechanical agitation. To reduce the possibility of breaking a glass sample vial and the generation of sparks glass sample vials SHALL be without excessive force. (EP-DIV-REPORT-09)

NOTE *Multiple sections may be performed and repeated in order to completely disposition all of the waste from a parent drum.*

[23] **PERFORM** the following applicable sub-section:

- Section 10.2, Waste Material Greater Than 190 mrem/hr
- Section 10.3, Prohibited Item Disposition
- Section 10.4, Waste Splitting Activities
- Section 10.5, Repackaging Activities
- Section 10.6, Processing Nitrate Salt Drums

10.2 Waste Material Greater Than 190 mrem/hr

The following sub-section provides instructions for the disposition of waste material with an expected radiation dose rate of greater than 190 mrem/hr on contact with the outside of a waste container. Simulating that the waste material is inside of a daughter waste container (e.g., measured through drum lid) is the desired method of determining the expected radiation dose rate of waste material outside of a waste container.

NOTE 1 *Appendix 5, Flowchart for Processing of High Dose Items of Mixed Material Types, illustrates the process for POC operations.*

NOTE 2 *Waste containers with Nitrate Salt and a radiation dose rate of greater than 190 mrem/hr are to be processed in accordance with Section 10.6, Processing Nitrate Salt Drums, before performing this section. An attempt to reduce the radiation dose rate to less than or equal to 190 mrem/hr by absorbing the Nitrate Salt with absorbent should be attempted first. Nitrate Salt absorption reduces the quantity of POCs required to process the waste material.*

Waste Handling Technician

[1] **ENSURE** that a POC assembly has been prepared and is available.

[2] **DETERMINE** whether the serial numbers on the pipe component lid and the pipe component are the same.

[3] **IF** the serial numbers do **NOT** match,
THEN:

[A] **IDENTIFY** (e.g., tag or mark) the POC indicating that the POC is defective.

[B] **SEGREGATE** the POC in order to prevent the item from being used.

NOTE *The NCR may be initiated at a time that is operationally convenient.*

[C] **ENSURE** that an NCR is initiated in accordance with P330-6, Nonconformance Reporting, as required.

[D] **NOTIFY** the WCRRF Operations Center of the discrepancy.

[E] **GO** to Step 10.2[1].

10.2 Waste Material Greater Than 190 mrem/hr (continued)

[4] **IF** the POC is to be bagged onto the WCG,
THEN RECORD the following POC bag-on bag information on Attachment 1:
- Manufacturer
- Model Number
- Serial Number
- Date of Manufacture

[5] **PLACE** the POC assembly and shielding near the vicinity of the WCG to provide shielding during bag-off operations or bag-on the POC to the WCG in accordance with Section 8.1, Bag On Daughter Drum, Bagport, or Gloveport; and **RECORD** the POC drum number and POC unique identification number on Attachment 1.

[6] **IDENTIFY** items to be placed into a POC assembly, and **ENSURE** that an item description is recorded on Attachment 1.

[7] **IF** the item is to be bagged off of the WCG and the item is from a waste container with a mixed material type,
THEN:

[A] **REMOVE** any lead shielding from outside of the item, and **PLACE** the lead in a daughter drum.

[B] **ENSURE** that a description of the item is recorded on Attachment 1.

[C] **BAG OFF** the item in accordance with Section 9.1, WCG Item Bag Out.

[D] **IF** there is no lead shielding inside of the item (container),
THEN PLACE the bagged out item inside a shielded (pewter) container or cover with a lead blanket.

[E] **GO** to Step 10.2[9].

NOTE *Shielded container is only used for the purpose of ALARA and not for final waste packaging.*

[8] **IF** an individual item is to be bagged out of the WCG,
THEN:

10.2 Waste Material Greater Than 190 mrem/hr (continued)

[A] **BAG OUT** individual items in accordance with Section 9.1, WCG Item Bag Out.

[B] **PLACE** the bagged out items in shielded (pewter) container or cover with a lead blanket, as required.

NOTE 1 *A POC assembly drum is full when it has reached its weight limit of 547 lb, or is physically full.*

NOTE 2 *Waste placed into daughter drums or Pipe Overpack Containers (POCs) must be from a single parent drum.*

[9] **WHEN** the item is to be placed into a POC,
THEN ENSURE that the item has been removed from the shielded (pewter) container or lead blanket, as necessary.

[10] **PLACE** the items into the POC.

[11] **IF** the POC assembly is **NOT** full,
AND the parent drum is still being processed,
AND the POC assembly is **NOT** bagged onto the WCG,
THEN:

[A] **ALIGN** the lid holes with the holes in the pipe component body.

[B] **HAND-THREAD** the lid bolts as far as possible.

[C] **REPLACE** the fiberboard packaging, being careful to match the pipe bolt heads, hoist ring, and filter with cutouts in fiberboard.

[D] **REPLACE** the spacers, liner lid, and drum lid.

[E] **IF** there are additional 190 mrem/hr items to be bagged out of the WCG,
THEN GO to Step 10.2[7].

[12] **IF** the POC is bagged onto the WCG,
THEN bag-off the POC in accordance with Section 8.2, Bag Off Daughter Drum

10.2 Waste Material Greater Than 190 mrem/hr (continued)

[13] **CLOSE** the POC assembly in accordance with the manufacturer's instructions and **DOCUMENT** (initials and Z number) that the POC assembly has been closed in accordance with the manufacturer's instructions on Attachment 1.

[14] **WEIGH** the POC assembly, and **RECORD** the POC Assembly Gross Weight on Attachment 1.

[15] **REQUEST** an RCT perform a radiation survey of the POC, and **RECORD** the POC radiation survey results on Attachment 1.

[16] **IF** the following requirements are **NOT** satisfied:

- External surface radiation dose rates less than 200 mrem/hr (DOE/WIPP-02-3122)
- Gross weight less than 547 lb for a 12 in. POC (CH-TRAMPAC)

THEN NOTIFY the WCRRF Operations Center of the discrepancy, and **REQUEST** the applicable actions.

[17] **LABEL** the POC assembly drum in accordance with EP-DIV-DOP-20043.

[18] **IF** all of the waste in the parent drum has **NOT** been dispositioned,
THEN GO to the appropriate sub-section to complete processing the remaining waste.

[19] **GO** to Section 11.1, Disposition.

10.3 Prohibited Item Disposition

The following sub-section provides instructions for the disposition of waste material that is considered to be prohibited items at WIPP.

NOTE 1 *The following activities associated with sorting parent drum waste such as the disposition of liquids, pressurized containers, and PCB-contaminated waste may be performed simultaneously or in any order.*

NOTE 2 *The Hold Tag for CCP NCRs is removed from the parent drum and returned to CCP personnel.*

NOTE 3 *A completed PID package includes the following documents:*

- *Attachment 1, WCRRF WCG Waste Processing Data Sheet*
- *Attachment 5, WCRRF Prohibited Item Collection Drum Data Sheet*
- *EP-WCRR-WO-DOP-0221 Attachment 1, Checklist for the Preparation of a New 55-Gallon Drum Assembly*
- *EP-WCRR-WO-DOP-0221 Attachment 2, Checklist for the Closing of a 55-Gallon Drum Assembly*
- *WDP Waste Remediation Safety Evaluation Data Sheet (EP-DIV-AP-20098 Attachment 1)*

Waste Handling Technician

[1] **LOCATE** any contained, uncontained, or free liquids.

NOTE 1 *Waste containers with liquids (any amount or configuration) that have not been solidified (absorbed) must be managed on secondary containment pallets and have a FREE LIQUID label affixed.*

NOTE 2 *By absorbing all liquids the resulting daughter drum is not required to be stored on a secondary containment pallet.*

[2] **IF** liquid is identified inside of transparent or opaque containers that is less than or equal to 60 ml in the containers,
AND the liquid is **NOT** to be absorbed,
THEN PLACE the containers with liquids into the daughter drum.

[3] **IF** liquid is identified inside of a transparent or opaque containers (e.g., contents adequately labeled),
THEN:

[A] **RECORD** the approximate liquid volume on Attachment 1.

10.3 Prohibited Item Disposition (continued)

[B] **OPEN** the containers.

[C] **PERFORM** a pH test of the liquid using Litmus Paper.
- Acid (less than 7)
- Caustic (base – greater than 7)

[E] **NEUTRALIZE** the liquid, as necessary.

[F] **OBTAIN** the appropriate absorbing agent, and **PLACE** the absorbent into a compatible container (e.g., bottle or bag) that has a volume of less than 4 Liters.

NOTE *Multiple containers of less than 4 liters may be required in order to absorb all of the free liquid.*

[G] **TRANSFER** the liquid into the compatible container (e.g., bottle or bag), and **PLACE** the container (e.g., bottle or bag) inside of the daughter drum.

NOTE *Waste containers with liquids (any amount or configuration) that have not been solidified (absorbed) must be managed on secondary containment pallets and have a FREE LIQUID label affixed.*

[4] **IF** liquid is identified in transparent containers or in opaque containers that **CANNOT** be safely opened (e.g., contents adequately labeled),
THEN:

[A] **PLACE** the containers into the daughter drum.

[B] **NOTIFY** the WCRRF Operations Center of the discrepancy, and **DOCUMENT** in the Comments section of Attachment 1.

NOTE *Liquids are not to be combined or bulked.*

[5] **IF** any free liquid is identified,
THEN:

[A] **DETERMINE** the approximate volume of liquid, and **DOCUMENT** the approximate amount of liquid on Attachment 1.

[B] **PERFORM** a pH test on the liquid using Litmus Paper.

10.3 Prohibited Item Disposition (continued)

[C] **NEUTRALIZE** the liquid, as necessary.

[D] **OBTAIN** the appropriate absorbing agent, and **PLACE** the absorbent in a compatible container (e.g., bottle or bag) that has a volume of less than 4 Liters.

[E] **ADD** a small amount of the free liquid to the container (e.g., bottle or bag).

[F] **IF** any reaction occurs between the absorbent and the free liquid,
THEN:

[a] **STOP** the addition work activities.

[b] **NOTIFY** the WCRRF Operations Center of the condition, and **REQUEST** the applicable actions.

[c] **DOCUMENT** the notifications and actions in the Comments section of Attachment 1.

NOTE *Multiple containers (e.g., bottle or bag) of less than 4 liters may be required in order to absorb all of the free liquid.*

[G] **IF** processing Nitrate Salts with free liquids,
THEN GO to Sub-section 10.6, Processing Nitrate Salt Drums.

[H] **MIX** the absorbent with the waste.

[I] **ENSURE** absorbent is thoroughly mixed with the liquid.

NOTE *Absorbing waste containers that are categorized as Nitrate Salts will generate additional daughter drums due to the amount of absorbent required to solidify the waste.*

[J] **PLACE** the containers (e.g., bottle or bag) inside of the daughter drum.

[K] **REPEAT** Step 10.3[5] until all liquids have been absorbed.

10.3 Prohibited Item Disposition (continued)

NOTE *Appendix3, Volumes of Cylindrical Inner Containers Near 4 Liters, can be used to help determine whether a container is greater than 4 liters.*

[6] **LOCATE** sealed, unpressurized containers greater than 4 liters (that do not contain any liquid), and **DISPOSITION** the container as follows:

[A] **REMOVE** the tape, lid, cap, stopper, or other appropriate method.

[B] **PLACE** the dispositioned items into the daughter drum.

[7] **LOCATE** opaque or non-penetrable item (that do not contain any liquid), and **DISPOSITION** the container as follows:

[A] **DESCRIBE** in detail (e.g., size, shape, labeling, weight, material) the opaque or non-penetrable items on Attachment 1.

[B] **PLACE** the dispositioned items into the daughter drum.

[8] **LOCATE** potentially pressurized containers, and **DISPOSITION** the container as follows:

[A] **IF** there is evidence that a potentially pressurized container has been previously punctured and is empty,
THEN:

[a] **PLACE** a metal rod or equivalent (item found in the waste) inside the container and **SECURE** with tape, or **ENLARGE** the hole to be visible by Radiography.

[b] **PLACE** the container inside the daughter drum.

[B] **IF** a potentially pressurized container is **NOT** punctured,
THEN:

[a] **DECONTAMINATE** (wipe down) the potentially pressurized container.

[b] **BAG OUT** the potentially pressurized container in accordance with Section 9.1, WCG Item Bag Out.

10.3 Prohibited Item Disposition (continued)

NOTE *Item Identification labels are generated as part of performing the WCATS desktop remediation application.*

[c] **PLACE** an Item Identification (ID) label on the potentially pressurized container or bagout bag.

NOTE 1 *A collection drum for pressurized containers and aerosol cans will be established and placed inside one of the WCRRF Transportainers (TSDF).*

NOTE 2 *Pressurized cylinders and aerosol cans must be collected in separate drums (e.g., on collection drum for pressurized cylinders and one collection drum for aerosol cans. All other prohibited items that cannot be remediated must be collected in a separate (third) collection drum.*

[d] **PLACE** the potential pressurized container in a designated collection drum.

[e] **ENSURE** that the following information is recorded on Attachment 5 for each item:

- Collection drum number
- Collection drum type (pressurized container, aerosol, or other)
- Date collection drum waste created
- Date item is added to the collection drum
- Item Identification Label Number
- Parent Container Number
- Parent Accumulation Start Date
- Parent EPA Codes
- Item Description
- Item Shape
- Item Size
- Item Labeling
- Item Weight (lb)
- Initials and Z number

NOTE *The hazardous waste label may need to be replaced in order to ensure that all information is added and legible.*

[f] **ENSURE** that the accumulation start date on the collection drum reflects the earliest parent drum accumulation start date recorded on Attachment 5.

10.3 Prohibited Item Disposition (continued)

[g] ENSURE that all EPA Codes from the associated parent drums are documented on the collection drum hazardous waste label.

[9] **IF** any polychlorinated biphenyls (PCB)-contaminated waste is identified, **THEN:**

[A] **DESCRIBE** in detail (e.g., size, shape, labeling, weight, material) the PCB-contaminated waste on Attachment 1.

NOTE *The following step may be performed when operationally convenient.*

[B] **ATTACH** a PCB Item ID Number to the drum receiving the PCB waste (above the top rolling hoop and cover with clear tape), and **RECORD** the PCB Item ID Number on Attachment 1.

[C] **PLACE** the PCB-contaminated waste into a daughter drum.

[10] **DOCUMENT** a description of the type of remaining waste added to each daughter drum during the processing of waste from a parent drum on Attachment 1.

[11] **REPEAT** Steps 10.3[2] though 10.3[10] as necessary to completely resolve any PIDs within the parent drum.

[12] **IF** all of the waste in the parent drum has **NOT** been dispositioned, **THEN GO** to the appropriate sub-section to complete processing the remaining waste.

NOTE *The following step may be performed out of sequence.*

[13] **DETERMINE** the level of waste placed into the daughter drum, and **RECORD** the Daughter Drum % Full value (%) on Attachment 1.

[14] **BAG OFF** waste containers in accordance with Section 7.2, Parent Drum Bag Off; and Section 8.2, Bag Off Daughter Drum.

[15] **GO** to Section 11.1, Disposition.

10.4 Waste Splitting Activities

The following steps provide instructions for the disposition of waste material with a PE-Ci value that requires the waste material to be divided into multiple daughter drums.

This sub-section is performed following the assaying of the parent drum and the determination of the number of daughter drums to be generated from the parent drum.

Waste Handling Technician

[1] **CAREFULLY REMOVE** a portion of the parent drum's contents (waste items).

[2] **NOTIFY** the Assay Personnel of the estimated weight of the items, as requested.

[3] **PLACE** the waste items into the WCG metal bucket.

[4] **LOWER** the metal bucket into the applicable daughter drum.

NOTE *Radiological assay data may be provided at the time of segregation or from waste container documentation provided with the container.*

[5] **ENSURE** a radiological assay of the material in the applicable daughter drum is performed as necessary.

Waste Handling Technician

[6] **IF** the assay is higher than desired,
THEN:

[A] **LIFT** the metal bucket out of the applicable daughter drum.

[B] **REMOVE** some of the metal bucket contents.

[C] **GO** to Step 10.4[4].

[7] **LIFT** the metal bucket out of the applicable daughter drum and segregate the waste in the WCG per radiological assay data.

NOTE *Waste placed into daughter drums or Pipe Overpack Containers (POCs) must be from a single parent drum.*

[8] **PLACE** the segregated waste from the WCG into the applicable daughter drum.

10.4 Waste Splitting Activities (continued)

[9] **REPEAT** Steps 10.4[1] through 10.4[8] until the desired radiological assay value is reached in the applicable daughter drum (farthest from airlock).

NOTE *The following step may be performed out of sequence.*

[10] **DETERMINE** the level of waste placed into the daughter drums, and **RECORD** the Daughter Drum % Full value (%) on Attachment 1.

[11] **BAG OFF** the applicable daughter drum in accordance with Section 8.2, Bag Off Daughter Drum.

NOTE *Steps 10.4[12] and 10.4[13] may be performed in any order or concurrently.*

[12] **BAG ON** a new daughter drum replacement in accordance with Section 8.1, Bag On Daughter Drum, Bagport, or Gloveport.

[13] **REPEAT** Steps 10.4[1] through 10.4[12] until all material within the parent drum has been processed.

[14] **WHEN** assaying of waste at the WCG is complete,
THEN ENSURE that the assaying equipment is removed from the WCG Exclusion Zone.

[15] **IF** all of the waste in the parent drum has **NOT** been dispositioned,
THEN GO to the appropriate sub-section to complete processing the remaining waste.

[16] **GO** to Section 11.1, Disposition.

10.5 Repackaging Activities

Waste Operator

[1] **REMOVE** waste items from the parent drum.

NOTE *Waste placed into daughter drums or Pipe Overpack Containers (POCs) must be from a single parent drum.*

[2] **PLACE** the waste items into a daughter drum.

[3] **DOCUMENT** any waste added during the processing of waste from a parent drum on Attachment 1.

NOTE *The following step may be performed out of sequence.*

[4] **DETERMINE** the level of waste placed into the daughter drums, and **RECORD** the Daughter Drum % Full value (%) on Attachment 1.

[5] **BAG OFF** the parent and daughter drums from the WCG in accordance with Section 7.2, Parent Drum Bag Off; and Section 8.2, Bag Off Daughter Drum.

[6] **IF** all the waste in the parent drum has **NOT** been dispositioned,
THEN GO to the appropriate sub-section in this procedure to complete processing of the remaining waste.

[7] **GO** to Section 11.1, Disposition.

10.6 Processing Nitrate Salt Drums

The following sub-section provides instructions for the disposition of Nitrate Salt drums that require the waste material to be mixed with absorbent material. Unless otherwise directed by supervision the minimum ratio of absorbent to Nitrate Salt is 3-parts absorbent to 1-part Nitrate Salt.

[1] **REMOVE** the waste items from the parent drum.

[2] **DOCUMENT** any waste items from the parent drum added to the daughter drum during the waste processing on Attachment 1.

[3] **ENSURE** that an organic absorbent (Kitty Litter/Zeolite® absorbent) is added to the waste material at a minimum ratio of 3-parts absorbent to 1-part waste or at a ratio as directed by supervision.

[4] **ENSURE** absorbent (Kitty Litter/Zeolite® absorbent) is thoroughly mixed with the Nitrate Salt material.

[5] **IF** the measured radiation level of the absorbent/Nitrate Salt mixture is greater than 190 mrem/hr,
AND multiple attempts to reduce the radiation level by splitting the absorbent/Nitrate Salt mixture have been attempted or directed by supervision,
THEN GO to Section 10.2, Waste Material Greater Than 190 mrem/hr.

[6] **IF** the measured radiation level of the absorbent/Nitrate Salt mixture is greater than 190 mrem/hr,
THEN:

[A] **SPLIT** the absorbent/Nitrate Salt mixture.

[B] **REPEAT** Steps 10.6[3] through 10.6[5] for each portion of the absorbent/Nitrate Salt mixture.

[7] **PLACE** process waste into daughter drum.

[8] **REPEAT** Steps 10.6[1] through 10.6[7] for all Nitrate Salt processing.

[9] **REMEDIATE** the contents of the parent drum for other items as applicable.

10.6 Processing Nitrate Salt Drums (continued)

NOTE *Absorbent waste containers that are categorized, as Nitrate Salts will generate additional daughter drums due to the amount of absorbent required to solidify the waste.*

[10] **DETERMINE** the level of waste placed into the daughter drums, and **RECORD** the Daughter Drum % Full value (%) on Attachment 1.

[11] **BAG OFF** the parent and daughter drums from the WCG in accordance with Section 7.2, Parent Drum Bag Off; and Section 8.2, Bag Off Daughter Drum.

[12] **CLOSE** the daughter drum in accordance with EP-WCRR-WO-DOP-0221, Preparing and Closing 55-Gallon Daughter Drum Assemblies.

11. POST-PERFORMANCE ACTIVITY

11.1 Disposition

Waste Handling Technician

[1] **SIGN** and **DATE** the applicable attachments.

Cognizant System Engineer

[2] **IF** UNSAT was checked on Attachment 4,
THEN:

[A] **PERFORM** an Immediate Operability Determination (IOD) in conjunction with the SOM in accordance with AP-341-516, Operability Determination and Functionality Assessment.

[B] **IF** the IOD is that the Structure, System, and Component (SSC) is operable, **AND** information is available that could change the outcome of the IOD, **THEN PERFORM** an Prompt Operability Determination for the deficiency in accordance with AP-341-516.

[C] **NOTIFY** the applicable Operations Center and SOM of the operability determination, as applicable.

[D] **PRINT, SIGN, Z number** and **DATE** Attachment 4.

SOS or designee

[3] **IF** a Fire Watch was stationed,
THEN ENSURE all INVENTORY is in a safe configuration, and **SECURE** the Fire Watch, and **CHECK** (√) YES or NO on Attachment 1.

[4] **IF** Section 10 was performed,
THEN ENSURE that the WCATS desktop application WCRR-REMED has been completed and the all-in-one labels generated and applied in accordance with EP-DIV-DOP-20043.

[5] **REVIEW** the applicable attachments for accuracy and completeness.

[6] **IF** any discrepancies are identified,
THEN RESOLVE the discrepancies with the original surveillant to correct the documentation.

11.1 Disposition (continued)

[7] **IF** Attachment 4 was completed,
THEN:

[A] **CHECK** (√) YES or NO to indicate whether the applicable acceptance criteria is satisfied on Attachment 4.

[B] **IF** the applicable acceptance criteria is **NOT** satisfied,
THEN:

[a] **ENSURE** that the applicable TSR actions have been implemented.

[b] **ENSURE** that the actions of EP-DIV-AP-13, EWMO TSR-Related Operational Limits Actions Compliance Tracking, have been implemented.

[c] **ENSURE** that the WCRRF Operations Center, SOM and EWMO Facility Operations Director (FOD) have been notified of the discrepancy.

[8] **PRINT, SIGN,** and **RECORD** Z#, Date/Time on the applicable attachments.

[9] **FORWARD** the applicable attachments to the WCRRF Operations Center.

[10] **ENSURE** that the Administrative Control Lock Log Sheet form, lock and key are returned to WCRRF Operation Center.

[11] **IF** a prohibited item collection drum was brought into TA-50-69,
AND waste processing is complete,
THEN ENSURE that the prohibited item collection drum is moved out of TA-50-69.

NOTE *Completing a Post-Job Review may be accomplished using the applicable P300 form or online (the preferred method since the institution has access to feedback and lessons learned http://int.lanl.gov/safety/iwmc/ [Click on the Submit IWD Part 4, Post-Job Review]).*

[12] **IF** any of the following occur:
- A new activity was completed for the first time
- A request was made by anyone involved with the performance of this procedure to perform a post-job review
- An abnormal event occurred
- A revision to an existing procedure was issued and it has been determined by the procedure owner or designee that a Post-Job Review is required

THEN PERFORM a Post-Job Review in accordance with P300.

11.1 Disposition (continued)

[13] **IF** the Post-Job Review identified any necessary changes to this procedure, **THEN INITIATE** a revision to this procedure.

11.2 Records Processing

Waste Handling Technician or Supervision

[1] Disposition records in accordance with the following:

Record Identification	Record Type Determination	Protection/Storage Method	Processing Instructions
Appendix 1. WCRRF P101-25, Attachment B Drum Lift Pre-Engineered Critical Lift Plan, Attachment 1, WCRRF WCG Waste Processing Data Sheet Attachment 2, WCRRF WCG Drum Lift Inspection Data Sheet Attachment 3, WCRRF WCG Breaching (Opening) Unvented, Sealed Waste Packages Checklist Attachment 4, WCRRF WCG Breaching (Opening) Metal 5- to 30 gal Unvented, Sealed Waste Package Surveillance Attachment 5, WCRRF Prohibited Item Collection Drum Data Sheet	Quality Assurance (QA) Record	Supervision **SHALL** implement a reasonable level of protection to prevent loss and degradation. Records should be maintained in a one-hour fire rated metal file cabinet when not in use. The instructions in this section may vary depending on the record such as some records may be retained in an Operations Center for a period of time (e.g., 1 year) in order to provide trending data or evidence of compliance.	When the records are ready for final disposition, the record is transferred to Records Management in accordance with EP-DIR-AP-10003, Records Management Procedure For ADEP Employees.

12. REFERENCES

ABD-WFM-006, Technical Safety Requirements (TSRs) for Waste Characterization, Reduction, and Repackaging Facility (WCRRF)

AP-341-516, Operability Determination and Functionality Assessment

CCP-TP-113, CCP Standard Waste Visual Examination

CH-TRAMPAC, Contact Handled – Transuranic Waste Authorized Methods for Payload Control

DOE/WIPP-02-3122, Transuranic Waste Acceptance Criteria For Waste Isolation Pilot Plant

EP-DIV-AP-0112, EWMO Pre-Job Briefings

EP-DIV-AP-13, EWMO TSR-Related Operational Limits Actions Compliance Tracking

EP-DIV-AP-20047, LTP Glovebox/Glovebag and Glove Safety Program

EP-DIV-AP-20098, LTP TRU Waste Remediation Safety Evaluation

EP-DIV-AP-0117, WDP Division Forms

EP-DIV-AP-0120, EWMO Watchbill Administration

EP-DIV-DOP-20043, LTP TRU Waste Container Labeling

EP-DIV-POLICY-20057, EWMO Health and Safety Policy-Manual Movement

EP-DIV-REPORT-09, Engineering Path Forward Report for CMR Wing 2 Containers

EP-DIR-AP-10003, Records Management Procedure For ADEP Employees

EP-WCRR-FO-DOP-0201, WCRRF and Building TA-50-69 TSR Mode Change

EP-WCRR-RM-AOP-0208, Special Shapes

12. REFERENCES (continued)

EP-WCRR-WO-DOP-0221, Preparing and Closing 55-gal Daughter Drum Assemblies

EP-WCRR-WO-DOP-0236, WCRRF Loading/Unloading SWB or 85-gal Drum

EP-WCRR-WO-DOP-0239, Verifying WCRRF Scales

EWMO-DO-07-042, Memo. Dtd. Jul 6 ,2007, WCRRF Pu-238 Glovebag Issue

Form 1489, Pre-Operational Inspection Record for Overhead Cranes and Hoists

P101-18, Procedure for Pause/Stop Work

P101-25, Cranes, Hoists, Lifting Devices, and Rigging Equipment

P330-6, Nonconformance Reporting

APPENDIX 1
Page 1 of 10

WCRRF DRUM LIFT CRITICAL LIFT PLAN (P101-25 Attachment B)

Table B-1. LANL Critical Lift Plan for Pre-Engineering Production Lift	
Name and company of person preparing this plan: LANS	
Date prepared: 1-31-2014	**Date of lift:**
Critical lift plan expiration date: N/A	**PIC:**
Client/customer: DOE/WIPP	Job #: N/A Project #: N/A
Lift location (building #, address, etc.): WCRRF, TA-50-69	This critical lift plan must be available when and where the lift is performed. How will this requirement be met? Kept on file in the WCRRF Operations Center.

A. Critical Lift Determination	
A lift will be determined critical if any of the following conditions are met. Check each answer with either a Yes or a No.	
1. If the load item were damaged or upset would it result in a release into the environment of radioactive or hazardous material exceeding the established permissible environmental limits?	Yes ____ No √
2. Is the load item unique and, if damaged, would it be irreplaceable or not repairable and is it vital to a system, facility or project operation?	Yes ____ No √
3. If the load item was damaged, would the cost to replace or repair the load item, or the delay in operations of having the load item damaged have a negative impact on facility, organizational, or DOE budgets to the extent that it would affect program commitments?	Yes ____ No √
4. If the load were mishandled or dropped, would the event cause any of the above noted consequences to nearby installations or facilities?	Yes ____ No √
5. Does the lift exceed 75% of the manufacturer's rated capacity for the crane, hoist, or mechanized equipment to be used in the lift?	Yes √ No ____
6. Does the load item require special care in handling because of weight, size, asymmetrical shape, undetermined center of gravity, installation tolerances, or other unusual factors?	Yes ____ No √
7. Is the lift an otherwise non-critical lift that must be made in close proximity to critical or expensive items that could be damaged as a result of contact with a hoisted load?	Yes ____ No √
8. Does the lift use two or more cranes, hoists, pieces of mechanized equipment, or a combination of such equipment?	Yes ____ No √
9. Is the lift such that the crane, hoist, or mechanized equipment could at any time come in contact with an energized high voltage power line?	Yes ____ No √
10. Could failure of this lift significantly impact the confidence of LANL customers or sponsors in the ability of LANL to safely execute current or future missions?	Yes ____ No √

APPENDIX 1
Page 2 of 10

Table B-1. LANL Critical Lift Plan (Cont.)

B. Pre-lift Checklist (Completed prior to each lift)		**D. Load Identification and Information**
__ Crane's monthly and annual inspections current		1. Load condition: ____ New ___ Used __√ N/A
__ Periodic maintenance complete		2. Wt. empty: ___N/A_____
__ Crane inspected	__ Site-control in-place	3. Wt. of contents: ___N/A_____
__ Load test verified	__ Spotters in-place	4. Wt. of lifting beam: ___N/A_____
__ Operator is qualified	__ Signal person identified	5. Wt. of rigging: __N/A_____
__ Riggers are qualified	__ Head-height checked	6. Wt. of excess load material: _N/A_____
__ Rigging proof tested	__ Hoist-height checked	7. Wt. of temporary lift frames: __N/A_____
__ Proof tests verified	__ Signatures procured	8. Total weight: __> 468 lb ≤ 624 lb_____
__ Rigging inspected	__ Tailing info provided	9. Source of load weight information: _____
__ Annual rig. Insp. current	__ Job briefing held	WCRRF drum scale _____ *(drawings, calculations, dynamometers, etc.)*
__ Work zones identified	__ Team is ready for lift	10. Page on drawing: __N/A_____
C. Personnel & Environmental Exposure		11. Revision #: __N/A__ Revision date: __N/A__
1. Any radiation exposure hazards? __Yes_____		12. Center of gravity has been identified: __N/A__ _____
2. Any chemical exposure hazards? __Yes____		13. Dimensions: __Standard 55-gal drum_____ _____ _____
3. Any explosive hazards? ___No_____		14. Location and type of lift points are shown: ___See attached figure._____
4. Any exposure hazards to the public? ___No__		**E. Operating Equipment to be Used**
If YES to any of the above, what precautions are needed? 1. RWP 2. IWD	No	1. Crane mfg. and model: __Drum Lift: LANL___ ___Designed and Built_____
5. Is EM&R notification required?	No	2. Crane S/N: _N/A_ ID-No: Drum -01 _____
When? N/A		3. Crane capacity: ___624 lb_____
Where? N/A		4. Trolley/travel restrictions: __N/A_____
Who? N/A_____		5. Load is what percent of crane capacity? __75 – 100 %_____
		6. Are any crane, hoist, and equipment load charts required for this lift? Y _____ N __√__ Are they available to the operator? Y _____ N _____ N/A __√____

APPENDIX 1
Page 3 of 10

Table B-1. LANL Critical Lift Plan (Cont.)

F. Rigging	**I. Sketches & Drawings**
1.Hitch type(s): ___N/A _____	In accordance with DOE-STD-1090-2007, *Hoisting and Rigging Standard,* rigging sketches must include--as applicable:
2. Sling type: WR ___ FW ___ RS __ Chain ___ (If more than one, write the number of each type on the appropriate line) N/A	1. Identification and rated capacity of slings, lifting bars, rigging accessories, and below-the-hook lifting devices. N/A
3. Number of slings: ___N/A _____	2. Load-indicating devices. N/A
4. Size: _____N/A _____	3. Load vectors (Sling Tension). N/A
5. Shackle sizes: ____N/A _____	4. Lifting points. N/A
6. Shackle rated capacity: ___N/A _____tons	5. Sling angles N/A
7. Sling assembly rated capacity: __N/A ___ lbs.	6. Boom and swing angles N/A
8. Shackle secured to load by: __N/A _____	7. Methods of attachment. N/A
9. Shackle & lifting lug mating are OK? ___N/A_	8. Crane orientations. N/A
10. Temporary lift frames & weights: ___N/A ___	9. Other factors affecting equipment capacity, such as load path sketch, key point heights, floor or soil bearing capacity, etc. Yes
11. Supports & load grillages shown? ___N/A___	10. Calculate and provide the rated capacity of equipment in the configuration in which it will be used. Yes Make sure that these items are included at a minimum.
G. Operating Area	**J. Notes/Things To Do**
1. Are obstructions present? No 2. Are clearance issues present? No 3. Is the lift area populated? No 4. Action items for 1, 2, & 3: Drawing provided	N/A
H. Practice Lift Required?	
1. Describe the lift No	
2. Team members involved in the practice lift must be those who will be involved in the actual lift. Are all of those members present? N/A	

APPENDIX 1
Page 4 of 10

Table B-1. LANL Critical Lift Plan (Cont.)

K. Personnel Assignments
List names of all persons involved in the lift and identify their roles (Operator, Signaler, Person In Charge [PIC], etc.). All must be qualified.

Name	Z Number	Role	Training Verified		Comments/Notes
			Y	N	
			Y	N	
			Y	N	
			Y	N	
			Y	N	
			Y	N	
			Y	N	

L. Review and Approval. List all that apply. (Must include the PIC and one other qualified person at a minimum and may include the health and safety rep., Responsible Line Manager [RLM], First Line Manager [FLM], responsible oversight org. rep., quality assurance rep., or others as required)

	Z Number	Organization	Concurrence / Approver's Signature
Responsible Line Manager		LTP-DDP	/s/John Guadagnoli /Randy Axtell
Crane Program SME	219935	OSH-ISH	/s/Clay Davis
IHS SME	120199	DSESH-EWMO	/s/Robert Gardner Winkle
CSE	233208	ES-EWMO	/s/Shawn West
PIC 1	240092	WCRRF LTP-DDP	/s/Clayton Mullins
Operator	240092	WCRRF LTP-DDP	/s/Joe Quintana
WCRRF SOS	240092	WCRRF LTP-DDP	/s/Clayton Mullins

APPENDIX 1
Page 5 of 10

M. Pre-lift Meeting					
Name	Z Number	Signature	Name	Z Number	Signature

APPENDIX 1
Page 6 of 10

Load Schematic & Rigging Method

Load Schematic & Rigging Method

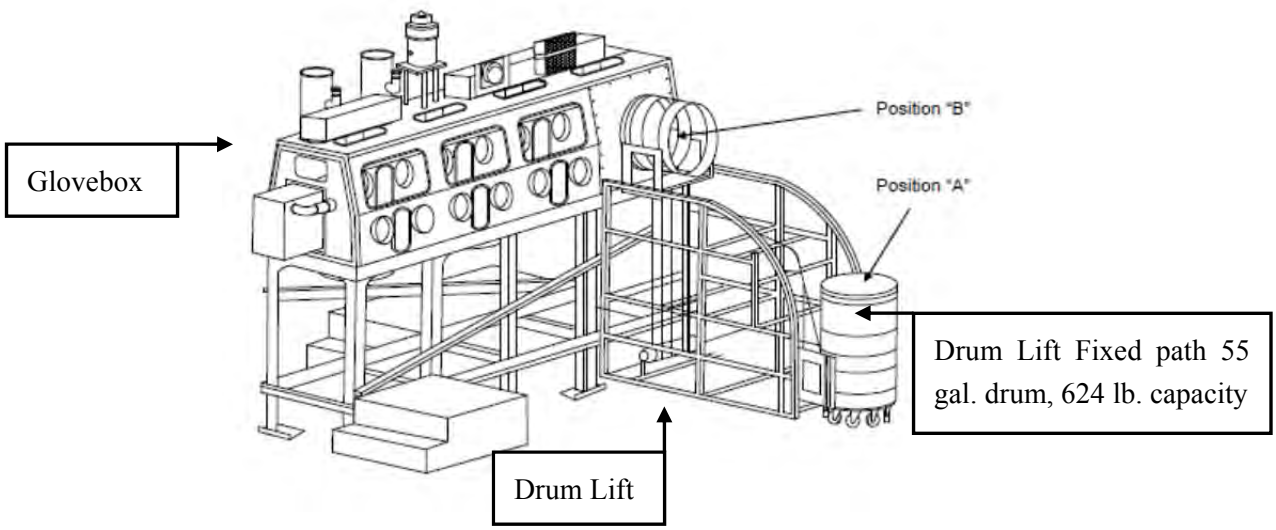

APPENDIX 1
Page 7 of 10

Load Travel Path/Personnel Placement

See Load Handling Sequence and Procedures

APPENDIX 1
Page 8 of 10

Load Handling Sequence & Procedures

Purpose

This critical lift plan is used for loading degraded or loss of integrity drums or drums that satisfy the critical lift requirements of P101-25 with the WCG Drum Lift as required by ABD-WFM-006, Technical Safety Requirements (TSRs) for Waste Characterization, Reduction, and Repackaging Facility (WCRRF). This critical lift plan must be used to lift and lower degraded drums with waste material using the WCG Drum Lift. This plan will be used to handle and prepare waste drums at Area-G and at WCRRF for a critical lift.

General Guidelines/Notes

This critical lift plan has been prepared in accordance with P101-25, Cranes, Hoists, Lifting Devices, and Rigging Equipment.
Drum handling operations involving degraded/loss of integrity drums or drums that satisfy the requirements for a critical lift in accordance with P101-25 (e.g., drums weighing greater than 468 lb) at WCRRF are performed using approved procedures and lifting equipment specifically designed for this operation.
The following information **SHALL** be reviewed during the critical lift pre-job brief:

1. All lifting and signaling **SHALL** be performed by a qualified operator. Supervision will be by a designated Qualified Crane Operator and Rigger Person-In-Charge (PIC) and documented on the WCRRF WCG Critical Lift Plan Concurrence Sheet.
2. The WCG Drum Lift and drums **SHALL** be visually inspected by the operator and/or qualified PIC. Any noted substandard item **SHALL** be cause for suspending operations until an acceptable replacement is acquired.
3. The rigging procedure **SHALL** be followed. Where changes are required due to site conditions, the changes **SHALL** be reviewed and approved by the Qualified Crane Operator and Rigger PIC.
4. The weight of the load **SHALL** include the 55 gal drum and lead blankets (if used for shielding purposes). In no case should the lift exceed 624 lb.
5. Communications between the WCG pendant operator and PIC **SHALL** be clear and unobstructed. The primary system **SHALL** be voice communications. Only designated, qualified signalers **SHALL** give signals to the operator. However, the operator **SHALL** obey a stop signal at all times, no matter who gives the signal.
6. A pre-lift meeting with all responsible persons **SHALL** be held before the lifts and each person **SHALL** be assigned specific duties and sign the pre-job sheet.
7. The equipment to be used for this lift will be as applicable: WCG Drum Lift.

APPENDIX 1
Page 9 of 10

Project Notes and Specifications

1. The primary goal is to perform a safe lift in a timely manner.
2. This lift has been frequently performed with equipment stated in this plan. A preliminary lift is not required but if any discrepancies are noted during the lift, the project **SHALL** be stopped and re-evaluated by the Qualified Operator, and Qualified Crane Operator and Rigger PIC.
3. The drum **SHALL** be positioned secured in the WCG Drum Lift to facilitate SAFE and efficient operation. The drum lift pendant operator **SHALL** announce operation of the lift before commencing raising/lowering of the drum and all personnel **SHALL** stand clear and to the side of drum movement. The work area for assembling the payload **SHALL** be limited to personnel necessary for the operation. (Example: Operator, signal personnel, PIC, and RCTs.)
4. The lift requires understanding by the entire crew. This lift plan **SHALL** be thoroughly reviewed by the personnel performing the lift and the Critical Lift / Pre-Lift Meeting **SHALL** be conducted before the lift to ensure that all personnel are aware of their assigned duties. Each person involved in the lift must attend the meeting and sign the attendance sheet.

Competent Person / Lift Supervisor

The responsible person for this lift is the designated Qualified Crane Operator and Rigger PIC.

Emergency Action Plan

1. In the event that an emergency occurs, all operations **SHALL** be discontinued and any raised load **SHALL** be lowered/secured, if possible. For specific casualties, operators will also perform required actions of applicable procedures in the WCRRF Response Manual.
2. Each portion of the lift presents a slightly different set of variables as related to a direction and area where the components may be set down temporarily during an emergency.
3. During the pre-lift meeting the operators, riggers, and spotter are to specifically discuss emergency actions at various points during the lift. If the raised load has to be secured the operator will do so and contact the RCT and Qualified Crane Operator and Rigger PIC. All non-essential personnel are to be kept clear of the lift area.
4. The operator and rigging personnel will not resume the lift operations without approval from the RCT and the Qualified Crane Operator and Rigger PIC.
5. In the event of an equipment malfunction and the drum cannot be lowered/secured:
   - The operation will be placed in a safe configuration.
   - The waste will be unloaded from the drum and the drum will be manually removed from the drum lift, if possible, or the CSE will be notified for the applicable actions.

APPENDIX 1
Page 10 of 10

Hazard Assessment
This lift has been reviewed in great detail to ensure a safe lift and minimize hazards. The following items have been identified as unique for this lift.

In no case **SHALL** material being lifted weigh more than 624 lb. (drum + lead shielding).

Test Lift—A test lift is not required for this operation.
Travel Path—At the pre-job/lift briefing a spotter(s) **SHALL** be designated to observe the load along the entire travel path (consider slopes and uneven surfaces).

Overhead Instructions—The Qualified Crane Operator and Rigger PIC and rigging crew **SHALL** physically verify the travel path is clear of overhead obstructions before beginning the lift.

Working Around the Load (Cone of Safety) - Absolutely NO ONE **SHALL** be under the load, or while it is being raised, lowered, or moved. The Qualified Crane Operator and Rigger PIC **SHALL** ensure that the area (in front of the WCG Drum Lift) is clear of non-essential personnel. Specific placement of operators and RCTs **SHALL** be established during the pre-lift meeting.

Securing the Drum Lifting Assembly—The rigging crew s **SHALL** inspect the WCG Drum Lift before lifting a drum.

Equipment List

Ensure the following equipment is present, has undergone physical inspection, is properly calibrated and is ready to support the critical lift steps:

- WCG Drum Lift

Work Steps for Loading a 55 Gallon Drum Using the WCG Drum Lift

Step 1 Verify the drums weighs less than 624 lb.

Step 2 Obtain key from key box, Insert key, and turn on the power to the drum lift.

Step 3 Using the drum lift pendent, lower the drum lift to the lower limit switch or until the bellyband of the lift cradle can grasp the drum evenly.

Step 4 Position the drum on the drum lift with the drum bolt ring accessible for lid removal when inside the glovebox.

Step 5 Close and secure the bellyband, ensuring the bag-off sleeve does not get caught on the bellyband.

Step 6 Raise the drum to the horizontal port and stop, leaving an adequate gap (approximately 12 inches) to mount the bag-off sleeve to the horizontal port.

Step 7 Bag on the parent drum in accordance with this procedure.

Step 8 Turn off the power to the drum lift, remove key, and place in key box.

APPENDIX 2
Page 1 of 1

WCRRF ALLOWED CONTAINER TYPES FOR REMEDIATION

The following "allowed" container types may be remediated in the WCRRF glovebox because there is no concern for hydrogen buildup within the container:

- Containers without a gasket (e.g. containers with slip lids, paint cans, "produce cans" and other similar containers) of any size
- Containers of any size with slip-on lids (with or without a gasket)
- Empty containers of any size
- Fiber board containers of any size
- Sealed containers of any size not containing TRU waste or free liquids
- Any containers with a volume < (less than) 4 liters
- Unvented 5- to 30-gal waste packages

APPENDIX 3
Page 1 of 1

EXAMPLE PREOPERATIONAL INSPECTION RECORD FOR OVERHEAD CRANES AND HOISTS

NOTE: Use these buttons to print or save the form, DO NOT use the browser tool bar. SAVE PRINT

Form 1489

Los Alamos NATIONAL LABORATORY EST. 1943

Preoperational Inspection Record for Overhead Cranes and Hoists

Inspector	Date Inspected	Location
Manufacturer and Type		Serial Number and Rated Capacity

Current Inspections

- Current Annual ANSI/OSHA Inspection Date: _____
- Current Annual Mechanical and Electrical (*if applicable*) PM's Date: _____
- Current Monthly Inspection Date: _____

Main or Auxiliary Hoist Rope			
• Is there any distortion such as kinking, crushing, unstranding, bird-caging, heat damage, or core protrusion?	☐ Yes	☐ No	☐ N/A
• Are there six randomly distorted broken wires per rope lay or three broken wires per strand per rope lay?	☐ Yes	☐ No	☐ N/A
• Is there wear of 1/3 the original diameter of outside individual wires?	☐ Yes	☐ No	☐ N/A
Load Chain			
• Is there elongation or distortion?	☐ Yes	☐ No	☒ N/A
• Any twisting, corrosion, pitting, or discoloration?	☐ Yes	☐ No	☒ N/A
• Any gouges, nicks, or weld splatter?	☐ Yes	☐ No	☒ N/A
Spooling, Reeving			
• Is there cross-winding?	☐ Yes	☐ No	☐ N/A
• Are the rope stays together and in alignment?	☐ Yes	☐ No	☐ N/A
• Is there any double winding or overwinding?	☐ Yes	☐ No	☐ N/A
• Is there minimum of two wraps at lowest position?	☐ Yes	☐ No	☐ N/A
Anchoring			
• Anchoring secured or installed in accordance with manufacturer's recommendations?	☐ Yes	☐ No	☐ N/A
• Is there minimum of two wire rope clips?	☐ Yes	☐ No	☒ N/A
Main or Auxiliary Hook			
• Is the throat opening not greater than 15% of normal?	☐ Yes	☐ No	☒ N/A
• Is there less than ten-degree twist out of plane?	☐ Yes	☐ No	☒ N/A
• Any deformities or cracks?	☐ Yes	☐ No	☒ N/A
• Are the safety latches present and functional?	☐ Yes	☐ No	☒ N/A
Markings			
• Are the rated capacities conspicuously posted?	☐ Yes	☐ No	☐ N/A
• Are the controllers properly marked? Are remote crane controllers affixed a label which contains the following information? (crane manufacturer, location, and other information specific to the unit being operated) _____	☐ Yes	☐ No	☐ N/A
• Is the main disconnect properly marked?	☐ Yes	☐ No	☐ N/A
Are the items listed functional?			
• Brakes	☐ Yes	☐ No	☐ N/A
• Controllers	☐ Yes	☐ No	☐ N/A
• Limit switches	☐ Yes	☐ No	☐ N/A
• Lights, warning devices	☐ Yes	☐ No	☒ N/A
• Trolley	☐ Yes	☐ No	☐ N/A
• Bridge	☐ Yes	☐ No	☒ N/A
• Main or auxiliary load	☐ Yes	☐ No	☐ N/A

Remarks:

Form 1489 (12/10)

EXAMPLE

APPENDIX 4
Page 1 of 1

VOLUMES OF CYLINDRICAL INNER CONTAINERS NEAR 4 LITERS

Diameter		Height		Volume (liters)
3”	7.6 cm	12”	30.5 cm	< 4
3”	7.6 cm	18”	45.7 cm	< 4
4”	10.7 cm	12”	30.5 cm	< 4
4”	10.7 cm	18”	45.7 cm	> 4
4.5”	11.4 cm	12”	30.5 cm	< 4
4.5”	11.4 cm	14”	35.6 cm	< 4
4.5”	11.4 cm	16”	40.6 cm	> 4
4.5”	11.4 cm	18”	45.7 cm	> 4
5”	12.7 cm	8”	20.3 cm	< 4
5”	12.7 cm	10”	24.5 cm	< 4
5”	12.7 cm	12”	30.5 cm	> 4
5”	12.7 cm	14”	35.6 cm	> 4
5.5”	14 cm	8”	20.3 cm	< 4
5.5”	14 cm	10”	24.5 cm	> 4
5.5”	14 cm	12”	30.5 cm	> 4
6”	15.2 cm	8”	20.3 cm	> 4
6”	15.2 cm	10”	24.5 cm	> 4
6.5”	16.5 cm	8”	20.3 cm	> 4
7”	17.8 cm	6.5”	16.5 cm	> 4

<4 = less than 4 liters and does <u>not</u> require remediation

> 4 = greater than 4 liters and requires remediation

APPENDIX 5
Page 1 of 1

FLOWCHART FOR PROCESSING OF HIGH DOSE ITEMS OF MIXED MATERIAL TYPES

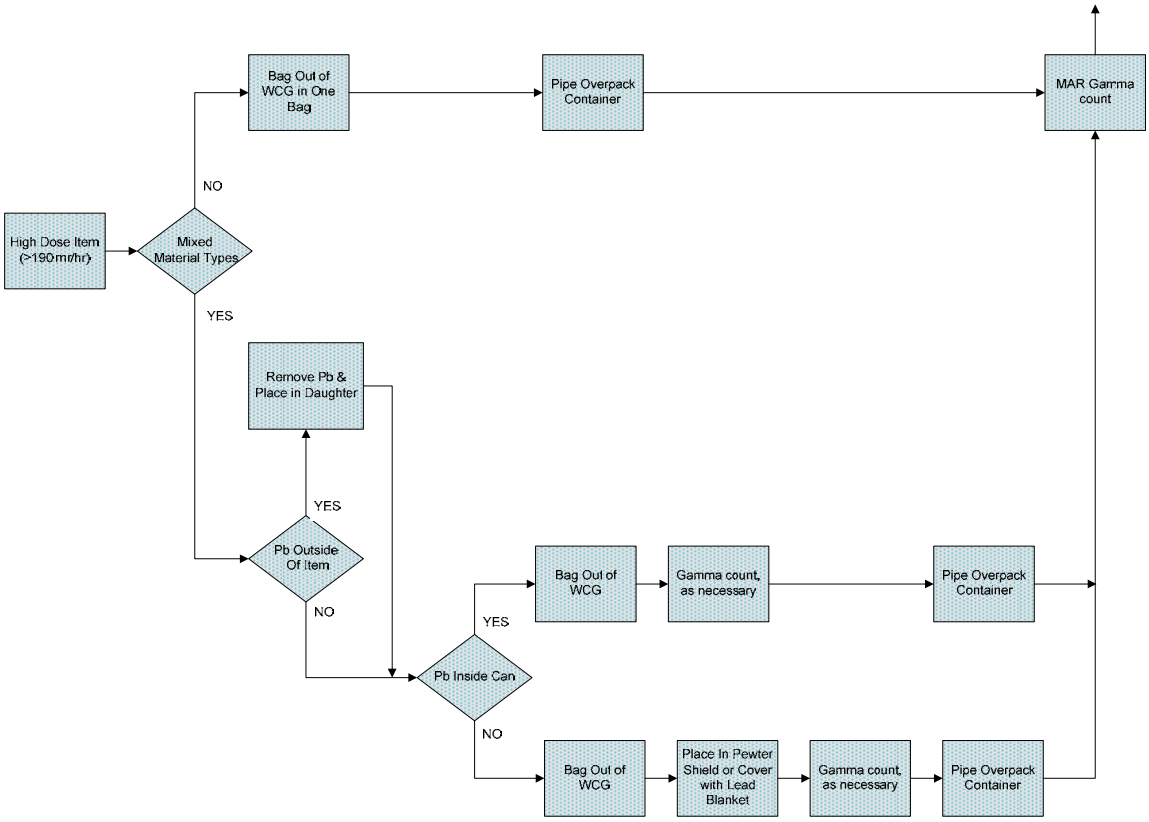

APPENDIX 6
Page 1 of 1

ADMINISTRATIVE CONTROL LOCK LOG SHEET

(Used when needed to track component manipulation)

NOTE: Refer to P315, Conduct of Operations Manual, Attachment 8, Section 8.1.5, for additional guidance.

Facility/Location: _____

Component No.	Authorized By (Shift Mgr.)	New Position	Positioned By	Verified By	Date/ Time	Restored By	Verified By	Date/ Time	Authorized By (Shift Mgr.)

APPENDIX 7

Page 1 of 1

MANUAL DRUM MOVEMENT SPECIAL INSTRUCTIONS

NOTE 1 *The following requirements below have been pre-approved in accordance with EP-DIV-Policy-20057, EWMO Health and Safety Policy.*

NOTE 2 *Any manual drum movement modifications or new scenario that may arise **SHALL** be performed in accordance with EP-DIV-Policy-20057.*

Manual Drum Movements within Transportainers:

- Two-person rule and a drum dolly chock to slide drums to and from the drum dolly and spill pallets
- Two-person rule to slide drums from one pallet to another
- Two-person rule to slide drums on the floor

Manual Drum movements to and from Scale:

- Mechanical means only

Manual Drum Movements between the 50-69 RBA and the CA

- Mechanical means
- Empty POCs mechanical mean only
- Empty 55 and 85s from pallet to dolly or dolly to pallet using two-person rule with a dolly chock

Manual Drum Movements to center of Scale

- Utilize mechanical means (e.g., drum grabber or versa lift)
- Two-person rule to slide drum to and from the center of the scale

Manual Movement of Drums onto Lift Table under the WCG

- Utilize versa lift, (if available) otherwise implement two-person rule to slide drum to and from the drum dolly and lift table with metatarsal guards

Manual Movement of Drums in Transport Vehicle for Receipt Inspection and Unloading

- Two-person rule to slide drums

ATTACHMENT 1
Page 1 of 4

WCRRF WCG WASTE PROCESSING DATA SHEET

4.1[6][B] Parent Waste Container No.: _____

6.2[4] Date Processed: _____

4.1[6][B] Prohibited Items:
☐ Sealed Containers > 4L ☐ Liquids ☐ Pressurized Containers ☐ N/A

4.1[6][B] Parent Waste Container RCRA Designations: _____

4.3[1]/4.3[2] **($)** TA-50-69 is in the OPERATION or WARM STANDBY MODE (TSR 1.2) ☐ OPERATIONS ☐ WARM STANDBY

4.3[4][B] Platform Scale: Equipment No.: _____
Cal. Due Date: _____

4.3[5][B] **($)** Three 1-Liter containers carbon spheroids or MET-L-X _____ (Initial and Date)
in WCG: (SAC 5.10.1.7.1)

4.3[6] **($)** Stationary Fire Watch has been established: ☐ N/A
(> 300 PE-Ci Equivalent Combustible) _____
(SAC 5.10.1.7.2) (Initial and Date)

4.3[7 [A] Parent Waste Container degraded, loss of integrity,
or weighs greater than 468 lb but less than or equal to 624 lb:
☐ YES ☐ NO ☐ N/A

4.3[8][D] WCG glove and bag-in/bag-out bag inspection: ☐ SAT ☐ UNSAT ☐ N/A

Performed By: _____ / _____ / _____ / _____
Waste Handling Tech (print) Signature Z # Date

ATTACHMENT 1
Page 2 of 4

4.1[6][B] Parent Waste Container No.: _____

5.[18] Prepared Parent Drum Weight (lb) including items secured to drum top, as applicable: _____ lb

6.2[5][A] Parent Drum Lead Blanket Weight (lb): _____ lb ☐ N/A

6.2[5][B]/ 6.2[6] Total Parent Drum Weight (lb) _____ lb

6.2[7] **($)** Total Parent Drum Weight < 624 lb (SR 4.5.1): ☐ SAT ☐ UNSAT

6.2[16] Retaining clips in place ☐ SAT ☐ UNSAT

6.2[18][D] Drum lift hinge pin retaining clip replaced._____/_____/_____ ☐N/A
Initials Z# Date

6.2[26] Approval to leave a parent drum attached to the WCG overnight:

_____/_____/_____/_____
EWMO-FOD (print) Signature Z # Date

ATTACHMENT 1
Page 3 of 4

4.1[6][B] Parent Waste Container No.: _____

Daughter Drums					
10.1[4]/10.2[4]	Daughter Drum No.				
10.1[4]	Daughter Drum Filter No.				
10.1[4]	Daughter Drum Bag Filter No.				
10.1[4]	Daughter Drum Purchase Order No.				
10.1[19][C]	WCG Fire Watch Stationed	☐ YES		☐ NO	☐ N/A
10.1[20][C][d]3/11.1[3]	WCG Fire Watch Secured	☐ YES		☐ NO	☐ N/A
10.2[4]	POC bag-on bag: Manufacturer				
	Model No.				
	Serial No.				
	Date of Manufacture				
10.2[5]	POC ID No				
10.2[6]/10.2[7][B]	POC Item Description				
10.2[13]	POC Assembly closed per Manufacturer's instructions. (Initial and Z#)				
10.2[14]	POC Assembly Gross Weight (lb)				
10.2[15]	POC Rad. Survey Results (mrem/hr)				
10.3[3][A]	Approx. Containerized Liquid Vol./Units				
10.3[5][A]	Free Liquid Volume/Units				
10.3[7][A]	Opaque/Non-penetrable Item Description:				
10.3[9][A]	PCB-contaminated Waste Description				
10.3[9][B]	PCB Item ID No.				
10.3[10]	Remaining Waste Description				
10.3[13]/10.4[10]/ 10.5[4]/10.6[10]	Daughter Drum % Full (%)				
10.5[3]/10.6[2]	Description Waste Added During Processing				

ATTACHMENT 1
Page 4 of 4

4.1[6][B] Parent Waste Container No.: _____

Comments: _____

_____
_____
_____
_____
_____
_____
_____
_____

11.1[1] Performed By: _____ / _____ / _____ / _____
Waste Handling Tech (print) Signature Z # Date

11.1[8] Reviewed By: _____ / _____ / _____ / _____
SOS or designee (print) Signature Z # Date/Time

ATTACHMENT 2
Page 1 of 2

WCRRF WCG DRUM LIFT INSPECTION DATA SHEET

6.1[2] Inspection Date: _____

6.1[4] Previous number of shaft bolt threads exposed:
- Upper Pulley Bolt Threads visible: _____
- Middle Pulley Bolt Threads visible: _____
- Lower Pulley Bolt Threads visible: _____

6.1[5] Current number of threads exposed out the end of the shaft bolt locknut:
- Upper Pulley Bolt Threads visible: _____
- Middle Pulley Bolt Threads visible: _____
- Lower Pulley Bolt Threads visible: _____

6.1[6] Shaft bolt end is flush with or extends out of the outer end of the shaft bolt locknut
- Upper Pulley Bolt Threads visible: ☐ YES ☐ NO
- Middle Pulley Bolt Threads visible: ☐ YES ☐ NO
- Lower Pulley Bolt Threads visible: ☐ YES ☐ NO

6.1[7] Shaft bolts do not show any sign of wear between the shaft bolt and the support flange (e.g., shaft not perpendicular to the flange plate):
- Upper Pulley Assembly: ☐ SAT ☐ UNSAT
- Middle Pulley Assembly: ☐ SAT ☐ UNSAT
- Lower Pulley Assembly: ☐ SAT ☐ UNSAT

6.1[9] New upper wire rope damage observed: ☐ YES ☐ NO

TABLE 3-1, UPPER WIRE ROPE DAMAGE

Description of Wire Rope Damage (e.g., wire break, corrosion, or pinch) (6.1[3]/6.1[10])	Previously Identified Damage (√) (6.1[3])	Damage Location from Hoist Drum (inches) (6.1[10])	Distance from damage to nearest wire break (inches) (6.1[10])

ATTACHMENT 2
Page 2 of 2

6.1[2] Inspection Date: _____

6.1[12] New lower wire rope damage observed: ☐ YES ☐ NO

TABLE 3-2, LOWER WIRE ROPE DAMAGE

Description of Wire Rope Damage (e.g., wire break, corrosion, or pinch) (6.1[3]/6.1[13])	Previously Identified Damage (√) (6.1[3])	Damage Location from Hoist Drum (inches) (6.1[13])	Distance from damage to nearest wire break (inches) (6.1[13])

6.1[14][A]/ 6.1[15] There are less than six randomly distributed broken wires in one rope lay or three broken wires in one strand in one rope lay.

☐ SAT ☐ UNSAT

Comments: _____

6.1[16][B]/ 11.1[1] Performed By: _____ / _____ / _____ / _____
Operator (print) Signature Z # Date

11.1[8] Reviewed By: _____ / _____ / _____ / _____
SOS or designee (print) Signature Z # Date/Time

ATTACHMENT 3
Page 1 of 1

WCRRF WCG BREACHING (OPENING) UNVENTED, SEALED WASTE PACKAGES

10.1[10][A] Parent Drum Identification #:_____ Page _____ of _____

Unvented-Sealed Waste Package type: (10.1[10][B])	☐ Metal 5- to 30-gal ☐ Non-metallic 5- to 30-gal ☐ < 5 gal	☐ Metal 5- to 30-gal ☐ Non-metallic 5- to 30-gal ☐ < 5 gal	☐ Metal 5- to 30-gal ☐ Non-metallic 5- to 30-gal ☐ < 5 gal	☐ Metal 5- to 30-gal ☐ Non-metallic 5- to 30-gal ☐ < 5 gal
($) Non-spark producing tools available in WCG. (SAC 5.10.1.6.1) (10.1[10][C])	☐ YES ☐ NO			
($)WCG electrical receptacles de-energized and locked open/off. (SAC 5.10.1.6.2) (10.1[10][D])	☐ SAT ☐ UNSAT			
($) 5- to 30-gal waste package lid restraint inspected for degradation (e.g., no indication of cracked parts, missing fasteners, loose or frayed parts, excessive wear, or unusual deformation), and determined to be capable of restricting lid. (SAC 5.10.1.5.1) (10.1[11][A])	☐ SAT ☐ UNSAT ☐ N/A < 5 gal	☐ SAT ☐ UNSAT ☐ N/A < 5 gal	☐ SAT ☐ UNSAT ☐ N/A < 5 gal	☐ SAT ☐ UNSAT ☐ N/A < 5 gal
($) Waste package lid restraint attached to waste package and proper installation verified. (SAC 5.10.1.5.1) (10.1[11][C])	☐ SAT ☐ UNSAT ☐ N/A < 5 gal	☐ SAT ☐ UNSAT ☐ N/A < 5 gal	☐ SAT ☐ UNSAT ☐ N/A < 5 gal	☐ SAT ☐ UNSAT ☐ N/A < 5 gal
($) Time 5- to 30-gal waste package vented. (Start Time) (SAC 5.10.1.5.2) or SAC 5.10.1.6.3) (10.1[11][E][f])/10.1[11][F][c]	_____ ☐ N/A < 5 gal	_____ ☐ N/A < 5 gal	_____ ☐ N/A < 5 gal	_____ ☐ N/A < 5 gal
($) Time since 5- to 30-gal waste package vented. (SAC 5.10.1.5.2) or SAC 5.10.1.6.3) (10.1[11][E][h])/10.1[11][F][e]	_____ ☐ N/A < 5 gal	_____ ☐ N/A < 5 gal	_____ ☐ N/A < 5 gal	_____ ☐ N/A < 5 gal
($) Elapsed time since 5- to 30-gal waste package vented is ≥ 30 minutes, and glovebox operations may resume and WCG electrical receptacles may be re-energized. (SAC 5.10.1.5.2) or SAC 5.10.1.6.3) (10.1[11][E][i]) 10.1[11][F][f]	☐ SAT ☐ UNSAT ☐ N/A < 5 gal	☐ SAT ☐ UNSAT ☐ N/A < 5 gal	☐ SAT ☐ UNSAT ☐ N/A < 5 gal	☐ SAT ☐ UNSAT ☐ N/A < 5 gal
($) Time < 5-gal waste package vented. (Start Time) (SAC 5.10.1.6.3) (10.1[12][A][f])	_____ ☐ N/A > 5 gal	_____ ☐ N/A > 5 gal	_____ ☐ N/A > 5 gal	_____ ☐ N/A > 5 gal
($) Time since < 5-gal waste package vented. (End Time) (SAC 5.10.1.6.3) (10.1[12][A][h])	_____ ☐ N/A > 5 gal	_____ ☐ N/A > 5 gal	_____ ☐ N/A > 5 gal	_____ ☐ N/A > 5 gal
($) Elapsed time since waste package vented is ≥ 30 minutes (SAC 5.10.1.6.3)	☐ SAT ☐ UNSAT	☐ SAT ☐ UNSAT	☐ SAT ☐ UNSAT	☐ SAT ☐ UNSAT
($) Lid restraint and waste package lid removed. (SAC 5.10.1.5.2 and 5.10.1.6.3) (10.1.[15])	_____	_____	_____	_____
($) WCG electrical receptacles may be re-energized. (SAC 5.10.1.6.3) (10.1[18])	_____ ☐ SAT ☐ UNSAT	_____ ☐ SAT ☐ UNSAT	_____ ☐ SAT ☐ UNSAT	_____ ☐ SAT ☐ UNSAT

Comments: _____

11.1[1] Performed By: _____ / _____ / _____ / _____
Operator (print) Signature Z # Date

11.1[8] Reviewed By: _____ / _____ / _____ / _____
SOS or designee (print) Signature Z # Date/Time

ATTACHMENT 4
Page 1 of 1

WCRRF WCG BREACHING (OPENING) 5- to 30-gal
METAL UNVENTED, SEALED WASTE PACKAGE SURVEILLANCE

10.1[10][E][a] Waste Container ID: _____

10.1[10][E][b] **($)** 55-gal parent drum containing an unvented-sealed METAL 5- to 30-gal waste package grounded to the WCG with a grounding strap that is firmly attached at all ends to clean-bare metal surfaces. (SR 4.6.1) ☐ SAT ☐ UNSAT

10.1[10][E][c] **VERIFY** that the grounding strap is attached ☐ SAT ☐ UNSAT

10.1[11][D][a] **($)** Unvented-sealed METAL 5- to 30-gal waste package grounded to the WCG with a grounding strap that is firmly attached at all ends to clean-bare metal surfaces. (SR 4.6.1) ☐ SAT ☐ UNSAT

10.1[11][D][c] **VERIFY** that the grounding strap is attached ☐ SAT ☐ UNSAT

11.1[11[E] Verified By: _____ / _____ / _____ / _____
Print Signature Z # Date

11.1[11[E][c]/ 11.1[12][A][c] Drill set to 640 rpm or less _____
Initials/Z#

Comments: _____

_____

_____

_____

11.1[1] Performed By: _____ / _____ / _____ / _____
Waste Handling Tech (print) Signature Z # Date

11.1[2][D] Reviewed By: _____ / _____ / _____ / _____
CSE (print) Signature Z # Date

11.1[6][A] Acceptance criteria satisfied: ☐ YES ☐ NO

11.1[8] Reviewed By: _____ / _____ / _____ / _____
SOS or designee (print) Signature Z # Date/Time

ATTACHMENT 5

Page 1 of 1

WCRRF PROHIBITED ITEM COLLECTION DRUM DATA SHEET

Container No. (10.3[8][B][e]):	Type (10.3[8][B][e]): ☐ Pressurized Container ☐ Aerosol Cans ☐ Other: _____		Date Created (10.3[8][B][e]):	Page _____ of _____

Date Item Added (10.3[8][B][e])	Item ID No. (10.3[8][B][e])	Parent Container No. (10.3[8][B][e])	Parent Accumulation Start Date (10.3[8][B][e])	Parent EPA Codes (10.3[8][B][e])	Item Description (10.3[8][B][e])	Item Shape (10.3[8][B][e])	Item Size (10.3[8][B][e])	Item Labeling (10.3[8][B][e])	Item Weight (lb) (10.3[8][B][e])	Initials/Z# (10.3[8][B][e])

ENCLOSURE 7

EP-WCRR-WO-DOP-1198, R1, IPC-1: WCRRF Waste Characterization Glovebox Operations

ENV-DO-14-0178

LA-UR-14-25297

Date: JUL 29 2014

P2010 Information Release Form

This form is to be completed and submitted to the Records Management Coordinator with copies BEFORE you present or submit for release any technical work.	Package for review must include: 1. Copy of submission 2. Completed **P2010 Information Release Form** and **Cover sheet** on each submission. 3. Completed **Records Submittal Form** for each submission submitted to RMDC.
P2010-3641/ERID-255877	

1. Author(s) name(s)					2. Author(s) Signature & Date
Last	First	Middle	Z #	Group (or affiliation)	
Jalbert	Lou	E	121997	TA-50	

3. Title of Article (in caps: spell out all symbols):
DP-WCRR-WO-DOP-1198, WCRRF Waste Characterization Glovebox Operations

4. Type of Information:	5. Intended For:
X Acceptable Knowledge (AK) reports, radioisotope data, and/or source documents	CCP & Public Release
☐ Other (**Must be PROJECT 2010, specific):** _____	**6. Particulars:** NONE

7. Z number, Name and Phone of contact for notification of release	Mail Stop
224089, Amy Johns, 575-302-8669 (cell)	J962

8. Typed/Printed Name of Derivative Classifier	Signature and Date	
Teresa L. Tingey	T L Tingey	5/2/2014
☐ Unclassified	☐ Unclassified, Limited Explain:	

9. P2010 Public Release Official	Signature and Date:	
Teresa L. Tingey	T L Tingey	5/2/2014
10. Typed/Printed Name of Responsible Author/Requestor	**Signature and Date:**	
Amy Johns	Amy Johns	5/2/2014
11. TWPS Operations Manager	**Signature and Date:**	
Gail Welsh	(For Gail Welsh)	5/2/2014

P2010 Information Release Form

This form is to be completed and submitted to the Records Management Coordinator with copies BEFORE you present or submit for release any technical work. P2010- 3641/ERID-255877	**Package for review must include:** 1. Copy of submission 2. Completed **P2010 Information Release Form** and **Cover sheet** on each submission. 3. Completed **Records Submittal Form** for each submission submitted to RMDC.

1. Author(s) name(s)					**2. Author(s) Signature & Date**
Last	First	Middle	Z #	Group (or affiliation)	
Jalbert	Lou	E	121997	TA-50	

3. Title of Article (in caps: spell out all symbols):
DP-WCRR-WO-DOP-1198, WCRRF Waste Characterization Glovebox Operations

4. Type of Information:	**5. Intended For:**
X Acceptable Knowledge (AK) reports, radioisotope data, and/or source documents ☐ Other (**Must be PROJECT 2010, specific**):	**CCP & Public Release** **6. Particulars:** NONE

7. Z number, Name and Phone of contact for notification of release	**Mail Stop**
224089, Amy Johns, 575-302-8669 (cell)	**J962**

8. Typed/Printed Name of Derivative Classifier	**Signature and Date**
Teresa L. Tingey	5/2/2014

☐ Unclassified	☐ Unclassified, Limited Explain:

9. P2010 Public Release Official **Teresa L. Tingey**	**Signature and Date:** 5/2/2014
10. Typed/Printed Name of Responsible Author/Requestor **Amy Johns**	**Signature and Date:** Amy Johns 5/2/2014
11. TWPS Operations Manager **Gail Welsh**	**Signature and Date:** Gail Welsh **(For Gail Welsh)** 5/2/2014

P2010- 3641/ERID-255877

Approved for public release:

Title:	DP-WCRR-WO-DOP-1198, WCRRF Waste Characterization Glovebox Operations
Author(s):	L. Jalbert
Submitted to:	CCP and Public Release

Immediate Procedure Change (IPC) Cover		
Section 1 – Originator Request		
Document No.: EP-WCRR-WO-DOP-1198	Revision No.: 1	IPC No.: 1
Title: WCRRF Waste Characterization Glovebox Operations		

Description of need and requested action (Attach document mark-up and numbered additional sheets, if needed):
Revise to add addition step for handling a pressurized container that is equipped with a mechanical device that will allow venting of the container without puncturing Section 10.3.

Originator Name (print):	Organization:	Z#:	Date:
Camillo R DiSalle	Procedure	200882	3-12-2014

Section 2 –Reviews

Discipline:	Name:	Signature:	Date:
WCRRF SOM	John Guadagnoli/R Axtell	/s/ John Guadagnoli/R Axtell	3-12-2014
Engineering	Val Rhodes	/s/ Val Rhodes	3-12-2014

USQ/USI Number: WCRRF-14-147-D Rev. 0 ☐ N/A

Section 3– Final Approvals

FOD Concurrence:	Print Name and Title:	Z#:	Date:
N/A	N/A	N/A	N/A
☒ Permanent ☐ Limited Use	Effective Date: 3-13-2014 Expiration Date: N/A		

Comments: FOD concurrence N/A, the FOD designee is included in the Review and Approval process.
unclassified Pat Crawford 3/13/14

Responsible Line Manager Signature:	Print Name and Title:	Z#:	Date:
	Louis E. Jalbert	121997	3-13-2014

IPC-1

WCRRF Waste Characterization Glovebox Operations

Effective Date: 3-3-2014

NOTE *This procedure may be either a Moderate or High/Complex Hazard activity based on the anticipated radiation levels during the performance of the activity in accordance with P300 requirements.*

Hazard Class:	☐ Low	☒ Moderate	☒ High/Complex
Usage Mode:	☐ Reference	☐ UET	☒ Both UET & Reference

The Responsible Manager has determined that the following organizations' review/concurrence is required for the initial document and for major revisions a same type and level review is required. Review documentation is contained in the Document History File:

Environmental Stewardship
Engineering
Industrial Hygiene and Safety
LTP DDP Project Manager
Operations Support
Quality Assurance
Radiation Protection
Shift Operations Manager
Subject-Matter Expert
WCRRF Shift Operation Supervisor

Responsible Manager, LTP-DDP Operations Manager

Lou Jalbert	/ 121997	/ /s/ L Jalbert	/2-28-2014
Name (print)	Z#	Signature	Date

Classification Review: ☐ N/A ☒ Unclassified ☐ UCNI ☐ Classified _____

Kari Vitaletti	/ 245399	//s/ K Vitaletti	/2-28-2014
Name (print)	Z#	Signature	Date

Working Copy / Information Only (circle one)
Initials / Date: _____/_____

This document fully satisfies the requirements of P300, Integrated Work Management, in order to systematically describe the work activity, the associated hazards, and the controls that **MUST** be employed to mitigate the risks.

REVISION HISTORY

Document Number	Issue Date	Action	Description
EP-WCRR-WO-DOP-0233, R.0	May 2007	New Document	
EP-WCRR-WO-DOP-0233, R.1	June 2007	Major Revision	Added requirement to move assay equipment outside of the WCG exclusion zone when not in use. Added precaution to prevent addition of items from multiple parent drums into a single daughter drum or Pipe Overpack Container. Added precaution for prohibited items – Class 1 oxidizers such as nitrates and reactive flammables.
EP-WCRR-WO-DOP-0233, R.2	June 2007	Major Revision	Added steps for dispositioning of potential pressurized containers.
EP-WCRR-WO-DOP-0233, R3	July 2007	Major Revision	Added steps for disposition of liquids. Added steps for actions to be taken in the event that any actual or suspected Class 1 oxidizers, flammables, or Pyrophoric materials/items are encountered.
EP-WCRR-WO-DOP-0233, R4	July 2007	Major Revision	Made use of glovebag to process Pu-238 inside the WCG optional based on input from the Facility ALARA Review Committee.
EP-WCRR-WO-DOP-0233, R5	July 2007	Major Revision	Added precaution for performance of diligent glove surveys and periodic glovebox wipe-downs when handling Pu-238. Deleted requirement for use of glovebag to process Pu-238 inside the WCG. Deleted Note in Sect. 8.12 which referenced use of partially filled POC's if all waste is from the same waste stream.
EP-WCRR-WO-DOP-0233, R.6	October 2007	Major Revision	Added precaution to prohibit remediation of following in the WCG 1) sealed containers > 4 liters that have a positive locking mechanism, 2) sealed un-vented containers > 4 liters with free liquids. Added action steps to take if containers are encountered. Added "allowed" container types that may be remediated. Added Attachment 3: Real Time Radiography Review for "Un-Allowed" Contents
EP-WCRR-WO-DOP-0233, R.7	October 2007	Minor Revision	Revised wording in Attachment 3 for review of RTR data.
EP-WCRR-WO-DOP-0233, R.8	October 2007	Major Revision	Deleted requirement for Real Time Radiography review & Attachment 3 (will be performed IAW EP-WCRR-WO-DOP-0211). Added section for processing high dose waste items (> 190 mrem/hr) of mixed material types. Added Attachment 3: Flowchart for Processing of High Dose Items of Mixed Material Types.
EP-WCRR-WO-DOP-0233, R.9	TBD	Major Revision	Incorporate the WCRR TSR page change to allow the opening of unvented 5- to 30-gal waste packages inside of the WCG.
EP-WCRR-WO-DOP-0233, R.10	January 2008	Major Revision	Delete requirement for SOM & CSE review of grounding sealed containers prior to venting.
EP-WCRR-WO-DOP-0233, R.11	March 2008	Minor Revision	Revised page 7 of 31 to include processing items that are heavy.

REVISION HISTORY (continued)

Document Number	Issue Date	Action	Description
EP-WCRR-WO-DOP-0233, R12	April 2009	Major	Revise procedure to incorporate the WCRRF TSR Revision 1 changes to the minimum staffing requirements which allows for the SOM to be on-call in the Operations Mode and now includes the requirements for the SOS (requires that the SOS be present at WCRRF during the Operations Mode and on-call in the Warm Standby Mode). This revision does not introduce any new hazards in this procedure. Update forms are required.
EP-WCRR-WO-DOP-0233, R13	May 11, 2009	Minor Revision	Revise procedure to provide guidance for the operator that the glovebox operations may continue after opening a < 5 gal unvented container without waiting 30 min., but the WCG electrical receptacles cannot be re-energized until 30 min. has elapsed since the unvented container was opened. Add additional instructions for creating loops within the document to address waste packages imbedded within other waste packages. This revision does not introduce any new hazards.
EP-WCRR-WO-DOP-0233, R14	June 12, 2009	Major Revision	Revise procedure to incorporate editorial corrections and to provide instructions for what to do when a shielded container is encountered containing radioactive material that exceeds the RWP limit. Add instructions to record the Waste Container Identification Number on the applicable attachments. This revision does not introduce any new hazards.
EP-WCRR-WO-DOP-0233, R15	November 24, 2009	Major Revision	Revise procedure to incorporate instructions for establishing, controlling, and the disposition of the Prohibited Item Collection Drum. Make editorial corrections as necessary. This revision does not introduce any new hazards.
EP-WCRR-WO-DOP-0233, R16	Approved for Training	Major Revision	Revise procedure to perform a pH test using pH strips and change "absorbent" to "approved absorbent" in Appendix 2. Make editorial corrections as necessary. This revision does not introduce any new hazards.
EP-WCRR-WO-DOP-0233, R17	February 18, 2010	Major Revision	Revise procedure to incorporate instructions for recording additional information for the prohibited items placed in the prohibited item collection drum. Incorporate process improvements (step sequences) and make editorial corrections as necessary. This revision does not introduce any new hazards. Incorporate the requirements of P300 and the hazards and controls from JHA 0008741 into this procedure.

REVISION HISTORY (continued)

Document Number	Issue Date	Action	Description
EP-WCRR-WO-DOP-0233, R18	March 22, 2010	Major Revision	Revise procedure to incorporate instructions for glovebox glove inspections and make editorial corrections as necessary. This revision does not introduce any new hazards.
EP-WCRR-WO-DOP-0233, R19	Training Only	Major Revision	Revise procedure to incorporate formality of operations into the procedure and incorporate the four parts of an integrated work document into the procedure in accordance with P300. Change title to WCRRF Waste Characterization Glovebox Operations. This revision is a total rewrite and revision bars have been omitted. This revision does not introduce any new hazards. This revision supersedes the following procedures: • EP-WCRR-WO-DOP-0223, Revision 4 • EP-WCRR-WO-DOP-0231, Revision 4 • EP-WCRR-WO-DOP-0232, Revision 8 • EP-WCRR-WO-DOP-0233, Revision 18
EP-WCRR-WO-DOP-0233, R20	October 27, 2010	Major Revision	Revise procedure to remove the requirements of SAC 5.10.1.2(1) in accordance with TSR Page Change 1.2, the fire blanket and MET-L-X is no longer a TSR requirement. The MET-L-X is being left as an administrative control. Make editorial corrections such as format changes. This revision does not introduce any new hazards.
EP-WCRR-WO-DOP-0233, R.21	November 2, 2010	Major Revision	Revise procedure to require that Building TA-50-69 is in the OPERATION mode for all activities in the procedure. Remove the Note in front of Step 4.3[7]. Add "approximately halfway" to Step 5.[9]. Change WARNING before Step 6.1[11] to indicate that there is no drum on the lift at this time. Revise Step 10.3[3] to remove requirement for testing a small portion of liquid and provide additional guidance for absorbing liquid. Make editorial corrections such as format changes. This revision does not introduce any new hazards.
EP-WCRR-WO-DOP-0233, R.22	November 8, 2010	Minor Revision	Revise procedure to modify hold tag note in Section 10.3 and modify step 10.3[2]. This revision does not introduce any new hazards.
EP-WCRR-WO-DOP-0233, R.23	February 8, 2011	Major Revision	Revise procedure to correct the TSR references and to allow the replacement of WCG bags in the WARM STANDBY mode. This revision does not introduce any new hazards.

REVISION HISTORY (continued)

Document Number	Issue Date	Action	Description
EP-WCRR-WO-DOP-0233, R.24	February 13, 2011	Minor Revision	Revise procedure to correct references and to provide clarification for the closure of a POC. Provide additional guidance for securing the horsetail during bag-in/bag-out operations. Make editorial corrections as necessary. This revision does not alter the purpose, scope, or intent of the original document. This revision does not introduce any new hazards.
EP-WCRR-WO-DOP-0233, R.25	April 13, 2011	Minor Revision	Revise procedure to incorporate process improvements. Incorporate instructions as to what to do if the parent drum closure ring cannot be reinstalled before lowering the parent drum. Make editorial corrections as necessary. This revision does not alter the purpose, scope, or intent of the original document. This revision does not introduce any new hazards.
EP-WCRR-WO-DOP-0233, R.26	April 18, 2011	Minor Revision	Revise procedure to provide instructions for loosening the nut on the closure ring bolt before lifting the waste drum up to the WCG. Make editorial corrections as necessary. This revision does not alter the purpose, scope, or intent of the original document. This revision does not introduce any new hazards.
EP-WCRR-WO-DOP-0233, R.27	June 9, 2011	Minor Revision	Revise procedure to provide instructions for inspecting drum lift hinge pins and attaching hinge pin retaining clips in Section 6.2; and add note that the retaining clips must be ML-2. Update equipment list to reflect ML-2 retaining clip. Make editorial corrections as necessary. This revision does not alter the purpose, scope, or intent of the original document. This revision does not introduce any new hazards.
EP-WCRR-WO-DOP-0233, R.28	August 10, 2011	Major Revision	This procedure is being revised to allow for bagging a POC onto the WCG, to correct the actions to be taken if a drum is stuck on the WCG drum lift, and to allow for processing waste at greater than 10 rem/hr. This last issue makes the activity a High/Complex Hazard Activity. The HA has been modified to allowed for the procedure to be performed as a Moderate or High/Complex Hazard Activity.
EP-WCRR-WO-DOP-0233, R.29	August 12, 2011	Minor Revision	Revise procedure to correct the high/complex activity hazard classification step in Attachment 1 to "> 10 rem/hr." This revision does not introduce any new hazards.

REVISION HISTORY (continued)

Document Number	Issue Date	Action	Description
EP-WCRR-WO-DOP-0233, Rev 29 IPC-1	August 29, 2011	IPC-1	Revised to change word in step 5.[11] from below to above and a caution and additional language to step 5[12] added ENSURE banding material is not placed around the hoop.
EP-WCRR-WO-DOP-0233, R.30	Training Only	Minor Revision	Revised to update requirements from page change 2.0 and 2.1 associated with STATIONARY Fire Watch in precautions, limitations and associated. Steps of the procedure when inventory is greater than >300 PE Ci. A STATIONARY FIRE WATCH is required in OPERATIONS and WARM STANDBY MODE when the WCG contains INVENTORY > 300 PE-Ci of EQUIVALENT COMBUSTIBLE WASTE. (SAC 5.10.1.7.1) and WCG SHALL be equipped with three 1-litre containers of carbon spheroids or MetL-X when the glovebox INVENTORY is >300 PE-Ci of EQUIVALENT COMBUSTIBLE WASTE (SAC 5.10.1.7.2), and WCG operators SHALL be trained in glovebox fire suppression techniques in order to extinguish small, early developing fires when processing INVENTORY > 300 PE-Ci of EQUIVALENT COMBUSTIBLE WASTE, in coordination with the STATIONARY FIRE WATCH, . This revision has not introduced any additional changes to the JHA.
EP-WCRR-WO-DOP-0233, R.31	Training Only	Minor Revision	Revise procedure to incorporate WCRRF TSR 2.0/2.1 IVR issues. Make editorial corrections as necessary. Revision does not introduce any additional hazards.
EP-WCRR-WO-DOP-0233, R.32	January 31, 2012	Minor Revision	Revise steps referencing 300 PE-Ci to add "equivalent combustible" after PE-Ci. Revision does not introduce any additional hazards.
EP-WCRR-WO-DOP-0233, R.33	April 5, 2012	Minor Revision	Revise procedure to incorporate instructions for the introduction of supplies into the WCG, for leaving a parent drum attached to the WCG overnight, and modify actions for a drum lift deficiency. Make editorial corrections such as correcting step numbering. Revision does not introduce any additional hazards.
EP-WCRR-WO-DOP-0233, R.34	May 24, 2012	Minor Revision	Revise procedure to provide guidance on simulating waste in a drum when obtaining radiation surveys and add the use of the Trolley Rail Clamp. Make editorial corrections such as correcting references. Revision does not introduce any additional hazards.

REVISION HISTORY (continued)

Document Number	Issue Date	Action	Description
EP-WCRR-WO-DOP-0233, R.35	July 2, 2012	Major Revision	Revised to separate verification steps from actual steps in Section 10.1 [10][D] and 10.1[10][E], 10.1[11][C], and reword Step 10.1[11][O] to read If directed by Supervision as a pre condition and Attachment 4 & 5 . Added steps for instructions for Administrative Lock Log, key, and lock Section 10. Added Steps to Section 4.1, 6.2, and 7.1 for using the Trolley Clamp Device. No additional hazards were identified during this revision. Rev bars in left column display locations of changes to the procedure.
EP-WCRR-WO-DOP-0233, R.36	August 1, 2012	Major Revision	Revised procedure to incorporate EP-SO-1708, and add steps to clarify the amount of absorbent needed when processing Nitrate Salts. Also added Appendix 6 Administrative Control Lock Log Sheet. No additional hazards were identified during this revision. Revision bars in the left column display location of changes in the procedure.
EP-WCRR-WO-DOP-0233, R.37	March 20, 2013	Major Revision	Revise procedure to allow flexibility with the processing of Nitrate Salts in order to permit flexibility with the amount of absorbent used. Make editorial corrections as necessary. Delete reference to the initiation of an NCR for issues associated with the waste material. No additional hazards were identified during this revision.
EP-WCRR-WO-DOP-0233, R.38	August 29, 2013	Major Revision	Revise procedure to incorporate steps for the implementation of WCATS at WCRRF. Make editorial corrections as necessary. This revision does not introduce any new hazards.
EP-WCRR-WO-DOP-1198, R.0	January 31, 2014	Major Revision	Revised to incorporate current list of approved Manual Drum Movements per WCRR-SO-13, Manual Drum Movement at WCRRF. Added WCRRF Desktop application to WCATS steps as applicable. Added updates for performing a critical lift in accordance with P101-25 Attachment B Revision 2. New procedure number to align with document control. No additional changes were introduces to the hazardous analysis. No Rev bars major revision
EP-WCRR-WO-DOP-1198, R.0	February 27, 2014	IPC	Revise procedure to correct step 6.1[14][A]. IF there are six randomly distributed broken wires in one rope lay or three broken wires in one strand in one rope lay. No additional hazards were incorporated in this ICP.

REVISION HISTORY (continued)

Document Number	Issue Date	Action	Description
EP-WCRR-WO-DOP-1198, R.1	March 3, 2014	Major Revision	Revised to add steps for drilling unvented containers Section 10 as applicable. Added steps in Section 6.2 to cut drum lid ringbolt prior to placement in WCG. Updated Appendix 1 footer and other corrections to P101-25 rev 3. Added Step 4.1[9] for handling Beryllium waste. Added Hazards to JHA and incorporated into the Precautions and Limitations.
EP-WCRR-WO-DOP-1198, R.1 IPC-1	March 13, 2014	IPC	Revise to add addition step for handling a pressurized container that is equipped with a mechanical device that will allow venting of the container without puncturing Section 10.3.

TABLE OF CONTENTS

Section — Page

TITLE PAGE 1
REVISION HISTORY 2
TABLE OF CONTENTS 8

1. PURPOSE 11

2. SCOPE 11

3. PRECAUTIONS AND LIMITATIONS 12

4. PREREQUISITES ACTIONS 20
4.1 Planning and Coordination 20
4.2 Materials and Equipment 22
4.2.1 Special Tools and Equipment 22
4.2.2 Consumables 23
4.2.3 Measurement and Test Equipment (M&TE) 23
4.3 Field Preparation 23
4.3 Field Preparation (continued) 27

5. PERFORMANCE—PARENT WASTE CONTAINER PREPARATION 32

6. PERFORMANCE—WCG PARENT DRUM LOADING/UNLOADING 36
6.1 WCG Drum Lift Daily Inspection 36
6.2 Parent Drum Loading 40
6.3 Parent Drum Unloading 44

7. PERFORMANCE—WCG PARENT DRUM BAG-ON/BAG-OFF OPERATIONS 47
7.1 Parent Drum Bag On 47
7.2 Parent Drum Bag Off 49

8. PERFORMANCE—WCG DAUGHTER DRUM, BAGPORT, OR GLOVEPORT BAG-ON/BAG-OFF OPERATIONS 54
8.1 Bag On Daughter Drum, Bagport, or Gloveport 54
8.2 Bag Off Daughter Drum 56

9. PERFORMANCE—ITEM BAG-IN/BAG-OUT OPERATIONS 60
9.1 WCG Item Bag-Out 60
9.2 WCG Introductory Port 64

10. PERFORMANCE—WCG WASTE PROCESSING 66
10.1 WCG Waste Processing Preparation 66
10.2 Waste Material Greater Than 190 mrem/hr 79
10.3 Prohibited Item Disposition 83
10.4 Waste Splitting Activities 89
10.5 Repackaging Activities 91
10.6 Processing Nitrate Salt Drums 92

11. POST-PERFORMANCE ACTIVITY 94

TABLE OF CONTENTS (continued)

Section Page

11.1 Disposition 94
11.2 Records Processing 96

12. REFERENCES 97

Appendices
Appendix 1, WCRRF Drum Lift Critical Lift Plan (P101-25, Attachment B) 99
Appendix 2, WCRRF Allowable Container Types For Remediation 109
Appendix 3, Example Preoperational Inspection Record For Overhead Cranes and Hoists 110
Appendix 4, Volumes of Cylindrical Inner Containers Near 4 Liters 111
Appendix 5, Flowchart For Processing of High Dose Items of Mixed Material Types 112
Appendix 6, Administrative Control Lock Log Sheet 113
Appendix 7, Manual Drum Movement Special Instructions 114

Attachments
Attachment 1, WCRRF WCG Waste Processing Data Sheet 115
Attachment 2, WCRRF WCG Drum Lift Inspection Data Sheet 122
Attachment 3, WCRRF WCG Breaching (Opening) Unvented, Sealed Waste Packages Checklist 119
Attachment 4, WCRRF WCG Breaching (Opening) Metal 5- to 30 gal Unvented 6 Sealed Waste Package Surveillance 122
Attachment 5, WCRRF Prohibited Item Collection Drum Data Sheet 123

1. PURPOSE

This procedure provides detailed instructions for Waste Characterization Glovebox (WCG) operations at the Waste Characterization, Reduction, and Repacking Facility (WCRRF).

TRU waste that has been identified as not satisfying Waste Isolation Pilot Plant (WIPP) acceptance criteria must be remediated to satisfy the WIPP criteria. Prohibited items must be removed or corrected and the container must also satisfy limits on the amount of radioactive material in each container. Containers that fail to satisfy the WIPP criteria maybe sent to WCRRF to be safely remediated in the WCG.

2. SCOPE

This procedure applies to personnel who perform WCG operations.

The Performance sections of this procedure may be performed independently or in conjunction with other Performance sections.

As used within this procedure a parent waste container is the originating waste container received at WCRRF for processing and a daughter drum is the resulting waste container packaged with the originating waste container waste. There may be multiple daughter drums.

This procedure addresses the following WCG activities:

- Preparation of parent waste containers
- Daughter drum, bagport, and gloveport bag-on/bag-off operations
- Parent drum bag-on/bag-off operations
- Parent drum WCG loading/unloading operations
- WCG waste processing

This procedure addresses the following activities for the complete processing and disposition of waste material within the WCG:

- Visual Examination (VE)
- Prohibited Item Dispositioning (PID)
- Pipe Overpack Component (POC)
- Waste Splitting
- Repackaging

This procedure is performed in conjunction with the Waste Compliance and Tracking System (WCATS), in order to track the WCRRF and Building TA-50-69 radioactive material inventory, populate WCATS with waste container information, to generate Transuranic (TRU)

2. SCOPE (continued)

Waste Storage Records (TWSRs), to generate labels, and to associate new daughter waste containers with the parent waste container.

The performance of this procedure may be classified as a Moderate or High/Complex Hazard activity based on the potential radiation levels encountered during the performance of this activity. To accommodate the two hazard classifications this document requires the identification of the potential radiation levels that may be encountered and documentation of the hazard classification level (moderate or high/complex).

Appendix 7, Manual Drum Movement Special Instructions, is a list of approved methods for manual drum movements developed in accordance with EP-DIV-SO-20057, EWMO Health and Safety Policy-Manual Movement for WCRRF. From the effective date of this procedure, any manual drum movements not listed in Appendix 7 of this procedure **SHALL** undergo the approval process in accordance with EP-DIV-SO-20057. If an interpretation of Appendix 7 is required, the LTP-DDP Operations Manager will provide the final determination as to whether the manual drum movement is captured on Appendix 7 or the manual drum movement instructions are to be developed in accordance with EP-DIV-SO-20057.

3. PRECAUTIONS AND LIMITATIONS

- This procedure contains special procedure step markings. **($)** is used to identify steps that implement WCRRF Safety Basis requirements. Steps containing **($)** may not be changed without Engineering approval to ensure the safety envelope is maintained.

- To comply with the intent of the As Low As Reasonably Achievable (ALARA) Program, all personnel **SHALL** apply the principles of time, distance, and shielding when working with radiological materials.

- Avoid the open area of a shielded container to prevent an increased exposure to radiation which could result from the streaming of radiation while accessing shielded containers during the processing of waste.

- Activities, items, and containers **SHALL** satisfy approved design specifications, regulatory requirements, process-specific parameters, and procedural requirements. Activities, items, or containers that do not conform to the approved specifications and requirements are considered nonconforming and Nonconformance Reports (NCRs) **SHALL** be generated in accordance with P330-6, Nonconformance Reporting, as required.

3. PRECAUTIONS AND LIMITATIONS (continued)

- When a worker observes an unsafe condition or act that may pose an imminent danger or other safety concern/hazard, the worker has the authority and responsibility to inform the worker engaged in the work and request that the work activity be paused and/or stopped based on the risk posed to the individual, the employees, the environment, or the facility in accordance with P101-18, Procedure for Pause/Stop Work.

- Supervision **SHALL** be notified if this procedure cannot be performed as written.

- Not Applicable (N/A) is documented on the attachments during the performance of this procedure indicating information that is not required to be recorded.

- **($)** TRU WASTE CONTAINERS **SHALL** not be stacked and **SHALL** not be lifted higher than 4 ft, excluding the WCG drum lift and lifts during loading or unloading from delivery trucks. (SAC 5.10.2.2)

- Drums **SHALL** not be lifted greater than 4 ft during any operation involved in preparing the drum.

- This procedure **SHALL** not be used to prepare DEGRADED/LOSS OF INTEGRITY drums. DEGRADED/LOSS OF INTEGRITY drums are prepared in accordance with EP-WCRR-WO-DOP-0236, WCRRF Loading/Unloading SWB or 85-Gal Drum.

- **($)** Drums **SHALL** be verified to weigh less than 630 lb before lifting the drums using the WCG drum lift. (SR 4.5.1) Administratively drum weights **SHALL** be limited to 624 lb in order to take into consideration the uncertainties of the instrumentation.

- This procedure is to be performed only by Waste Handling Operators as qualified Glovebox Operators.

- To avoid pinch points, the drum lift pendant operator **SHALL** announce operation of the drum lift before commencing raising/lowering of a drum and that all personnel **SHALL** stand clear and to the side of drum movement.

- **($)** The facility must be in the OPERATION MODE to process waste in the WCG. (TSR 1.2)

3. PRECAUTIONS AND LIMITATIONS (continued)

- The approximate weight of load should be known before moving and the appropriate capacity lift selected. Be aware of uneven loading and shifts in the load when moving.

- Drums can have sharp edges and create pinch points when being moved – use appropriate gloves when handling drums.

- Use proper lifting techniques and buddy system and wear steel toed shoes when performing heavy lifting or movements and comply with the requirements of EP-DIV-Policy-20057, EWMO Health and Safety Policy-Manual Movement.

- **($)** No flammable liquids or gases, and no combustible liquids with NFPA Flammability Rating greater than 1 **SHALL** be stored or used within BUILDING TA-50-69 when INVENTORY is in BUILDING TA-50-69 except three size 1 cylinders of P-10 gas and flammable or combustible liquids found in the TRU WASTE CONTAINER. (LCO 3.4.2)
- Portable high-efficiency particulate air (HEPA) filter ventilation equipment **SHALL** be removed from the WCG Exclusion Area after operations are complete. This limitation supports LCO 3.4.2.

- Due to the unique characteristics of Pu-238, diligent glove surveys should be performed before and after handling Pu-238, as well as periodic glovebox wipe downs.

- All operators involved in the execution of this procedure must be qualified as Waste Handling Operators.

- Fire Patrol or Stationary Fire Watch **SHALL** be established in accordance with the applicable Technical Safety Requirements and identified in EP-DIV-AP-0120, EWMO Watchbill Administration.

- STATIONARY FIRE WATCH **SHALL** be performed in accordance with EP-DIV-AP-0120, EWMO Watchbill Administration.

- **($)** WCG **SHALL** be equipped with three 1-liter containers of carbon spheroids or Met-L-X when the glovebox INVENTORY is > 300 PE-Ci of EQUIVALENT COMBUSTIBLE WASTE. (SAC 5.10.1.7.1)

- An administrative control will ensure that the WCG will be equipped with three 1-liter containers of carbon spheroids or MET-L-X to prevent the potential spread of a fire in the glovebox regardless of the inventory quantity in the WCG.

3. PRECAUTIONS AND LIMITATIONS (continued)

- **($)** A STATIONARY FIRE WATCH **SHALL** be in place when the WCG contains INVENTORY > 300 PE-Ci of EQUIVALENT COMBUSTIBLE WASTE, in order to extinguish small, early developing fires, in coordination with WCG operators. (SAC 5.10.1.7.2)
- When processing a parent drum if an item is encountered to be too large or heavy to handle supervision is to be notified.

- Use caution when performing glovebox operations. Operations may involve handling of sharp objects, applying force to objects with tools, lifting heavy materials or items.
  - The glovebox gloves **SHALL** have cut resistant (e.g., leather, or HexArmor®) gloves over them during glovebox operations when handling sharp objects or opening/closing waste containers.
  - Use the two-man rule when lifting heavy materials or items.
  - Cut or apply force away from hands and arms.
  - Use approved tools and techniques.
  - Tools **SHALL** be in good working order.

- **($)** WCG operators **SHALL** be trained in glovebox fire suppression techniques in order to extinguish small, early developing fires when processing INVENTORY > 300 PE-Ci of EQUIVALENT COMBUSTIBLE WASTE, in coordination with the STATIONARY FIRE WATCH. (SAC 5.10.1.7.3)

- Unvented, sealed waste packages are those waste packages that have a positive locking mechanism, such as a gasket with drum closure ring or a screw top lid (with no other openings) to seal the lid to the waste package.

- **($)** When breaching (opening) unvented, sealed waste packages in the WCG the following requirements **SHALL** be satisfied:
  - Non-sparking tools and processes **SHALL** be used, (SAC 5.10.1.6.1)
  - Electrical receptacles within the WCG **SHALL** be de-energized before opening the waste package and remain de-energized for a minimum of 30 minutes after removing the lid and lid restraining device. (SAC 5.10.1.6.2) and (SAC 5.10.1.6.3)

- **($)** Before breaching (opening)an unvented, sealed 5- to 30-gal waste packages in the WCG a lid restraining device **SHALL** be inspected for degradation and properly installed (SAC 5.10.1.5.1), and WCG operations **SHALL** be ceased for a minimum of 30 minutes following the removal of the waste package lid and lid restraining device (breaching). (SAC 5.10.1.5.2)

3. PRECAUTIONS AND LIMITATIONS (continued)

- **($)** When processing a positively sealed 30- to 5-gallon metal WASTE PACKAGE in the WCG, the parent 55-gallon drum bagged-on to the WCG and metal WASTE PACKAGE **SHALL** be grounded when the metal WASTE PACKAGE is breached and for 30 minutes after the removal of the lid and lid restraining device. (LCO 3.6)

- Personnel **SHALL** be aware of heat and cold stress indicators and observe co-workers in accordance with the Thermal Stress Awareness Course.

- Personnel protective equipment (PPE) **SHALL** be worn (e.g., safety shoes, cut resistance gloves, and respirator) as required by Industrial Hygiene/Health and Safety and in accordance with the Radiological Work Permit (RWP).

- Sharp objects **SHALL** be covered and properly stored when not in use. Wear cut/puncture resistant glove (e.g., leather) and cut away from your body when in use.

- All sharp objects that are introduced inside the glovebox **SHALL** be properly identified and stored when not in use in accordance with EP-DIV-AP-20047, LTP Glovebox/Glovebag and Glove Safety Program.

- Routine inspection of glovebox gloves **SHALL** be conducted in accordance with EP-DIV-AP-20047 and this procedure.

- To prevent personnel injury due to ergonomic, pinch point, and other general hazards, personnel **SHALL** maintain an awareness of the working environment and task activities and use good work practices and techniques, skill of craft, good ergonomic practices, and minimize time in awkward/uncomfortable positions.

- Spark-producing and non-sparking tools **SHALL** be distinguished from each other. Spark-producing tools are to be set aside in the WCG, and not handled, when non-sparking tools are required.

- A cordless drill may be used to open a parent drum. This will minimize overextending glovebox gloves and potential damage (i.e., tearing a glove) when using a ratchet. The cordless drill is considered to be a spark-producing tool and is to be placed aside in the WCG, and not handled, when non-sparking tools are required.

- Charging of portable electric equipment in the WCG **SHALL** not be performed when there is INVENTORY in the WCG.

3. PRECAUTIONS AND LIMITATIONS (continued)

- Charging of battery operated equipment external to the WCG **SHALL** not be charged within the WCG exclusion zone.

- If receptacle inside the WCG or in the WCG exclusion zone is used, the equipment being plugged in must be in the OFF position before inserting or removing the plug at the receptacle.

- Prohibited items are documented by two distinct processes. One is through the use of the fast scan process, indicated by the GREEN hold tag. The second is through the use of CCP's NCR, indicated by a RED hold tag.

- Waste placed into daughter drums or Pipe Overpack Containers (POCs) must be from a single parent drum.

- Based on waste acceptance criteria, Class 1 oxidizers such as nitrates, and reactive flammables such as lithium metal or hydrides are prohibited items in the WCRRF.

- Liquids removed from a parent drum must be remediated (absorbed) inside of a new container.

- Storage of drum lid restraints when not in use **SHALL** be such that the drum lid restraints are protected from degradation (e.g., daughter drum).

- Avoid slips, trips, and falls by wearing the proper footwear with slip-resistant soles and using handrails when using stairs. Use established pathways when available and avoid walking on uneven or unstable surfaces.

- Glass sample vials may contain residual granular plutonium hydride which can generate sparks when subjected to mechanical agitation. To reduce the possibility of breaking a glass sample vial and the generation of sparks, glass sample vials **SHALL** be handled with care and void volume reduction activities **SHALL** be performed without excessive force. (EP-DIV-REPORT-09)

- The fire protection system sprinkler head located in the WCG is a water source that if activated (inadvertently or as a result of an actual WCG fire) would result in the spread of radiological contamination. Contact with the sprinkler head during waste processing is to be avoided in order to reduce the possibility of the inadvertent initiation of water flow into the WCG.

3. PRECAUTIONS AND LIMITATIONS (continued)

- **($)** No combustibles **SHALL** be stored within the waste characterization glovebox (WCG) exclusion zone. The WCG exclusion zone is 10 ft around the WCG, up to GBE, or up to the walls of Room 102, whichever is less. (LCO 3.4)

  The following are excluded from the above limitations of LCO 3.4
  - INVENTORY that is in the WCG or staged in BUILDING TA-50-69.
  - Combustible components of support equipment (e.g., wiring insulation, operator platforms and rubber mats) within the WCG Exclusion Zone and associated with WCG processing.
  - Drum liners or wrapping around DEGRADED/LOSS OF INTEGRITY drums that are inside BUILDING TA-50-69 being loaded and working amounts of material necessary to complete bag on/off operations such as tape, cheese cloth, and extra operator gloves.
  - Hydraulic fluid within the engineered, closed-loop, containment systems.
  - Combustible components associated with a forklift.

- The Class 2 laser scanning head on the WCATS mobile device can cause eye injury if eye is exposed to the beam. Do <u>not</u> allow eyes of user or observers to become exposed to laser beam.

- The WCATS mobile device contains lithium-ion battery. The operating temperature recommendation for the Workabout Pro 3 (WCATS mobile device) is from -4 degrees F to 122 degrees F. Do <u>not</u> store the WCATS mobile device where temperatures are less than -40 °F or greater than 140 °F. Exposure to extreme temperatures (greater than 140 °F) may cause battery to explode. Keep mobile device out of direct sunlight for extended periods of time when not in use. Do not incinerate, mutilate, short circuit, or disassemble the battery pack. Do not dispose of in municipal waste receptacles. Dispose of in properly marked universal waste disposal areas.

- All manual physical movements of 55-gal and larger drums, whether empty or containing waste, **SHALL** be performed as a last resort and with written approval in accordance with EP-DIV-SO-20057, EWMO Health and Safety Policy-Manual Movement

- All approvals for manual physical movements in accordance with EP-DIV-SO-20057, EWMO Health and Safety Policy-Manual Movement and Appendix 7, Manual Drum Movement Special Instructions.

3. PRECAUTIONS AND LIMITATIONS (continued)

- All critical lift plans executed by LANL personnel **SHALL** be developed using Attachment B, LANL Critical Lift Plan, of P101-25, Cranes, Hoists, Lifting Devices, and Rigging Equipment.

- The instructions in this procedure satisfy the P101-25 ordinary lift requirements and the use of LANL Form 1611, Ordinary Lift Procedure, is not required. Not all of the items listed on Form 1611 are captured in this procedure because this procedure is performed using gantry cranes and forklifts in preapproved locations and lifts standard waste containers of a known size and volume.

- Forklift operations are governed by the LANL procedure P101-4, Forklift and Powered Industrial Trucks. P101-4 requires the completion of the applicable sections of a LANL procedure P101-25 Attachment B for critical lifts involving a forklift or powered industrial truck. Forklift operations not involving a critical lift (e.g., load suspended below the forks of the forklift) are not required to comply with the requirements of P101-25.

- Support Services Subcontractors executing this procedure SHALL comply with the safety and health requirements documented in contractual agreements with the LANL.

- Drill bits are sharp and can result in personnel injury or radiological contamination from compromised PPE.

4. PREREQUISITES ACTIONS

NOTE *The listed prerequisite actions may be completed in any order.*

4.1 Planning and Coordination

Supervisor or designee

[1] **ENSURE** that this procedure is the latest revision, and **IDENTIFY** this document as Working Copy or Information Only on the Title Page.

[2] **ENSURE** that the performance of this procedure has been scheduled on the WCRRF schedule.

[3] **ENSURE** that an RWP for the planned activity has been issued.

[4] **ENSURE** that a pre-job briefing is conducted for all personnel involved in the performance of this procedure, in accordance with EP-DIV-AP-0112, EWMO Pre-Job Briefings, and that the pre-job briefing included weather conditions, communication requirements, hazards/controls and emergency response actions.

[5] **ENSURE** that, as a minimum, the following personnel trained in the use of this procedure are available for performance of this procedure, as required:

- Two Radiological Control Technician (RCT)
- Four Waste Handling Technician
- One Supervisor (e.g., Shift Operations Supervisor or Person-In-Charge)
- One Central Characterization Project (CCP) representative [Visual Examination (VE) only]
- **($)** STATIONARY FIRE WATCH (greater than 300 PE-Ci equivalent combustible waste only) (SAC 5.10.1.7.2)

4.1 Planning and Coordination (continued)

[6] **IF** performing Section 10, WCG Waste Processing,
THEN:

[A] **ENSURE** that the waste containers to be processed have been evaluated in accordance with EP-DIV-AP-20098, LTP TRU Waste Remediation Safety Evaluation, and that a copy of the LTP Waste Remediation Safety Evaluation Data Sheet (EP-DIV-AP-20098 Attachment 1) has been obtained for each waste container to be processed.

[B] **INITIATE** a copy of Attachment 1, WCRRF WCG Waste Processing Data Sheet for each waste container to be processed, and **DOCUMENT** the following information:

- Parent Waste Container Number (record on each page of Attachment 1)
- Prohibited Items, if present
- Parent waste container RCRA Designations

[C] **ATTACH** a copy of the LTP Waste Remediation Safety Evaluation Data Sheet (EP-DIV-AP-20098 Attachment 1) to Attachment 1.

[7] **OBTAIN** a blank Administrative Control Lock Log Sheet form 10.4 of EP-DIV-AP-0117, lock, and key from the WCRRF Operations Center. (e.g., See Appendix 6, Administrative Control Lock Log Sheet)

[8] **ENSURE** that the TRU daughter waste container labels (e.g., Shorty barcode labels) have been obtained from the Waste Help Team (wastehelp@lanl.gov).

[9] **ENSURE** that beryllium-containing waste is identified and appropriately labeled before handling and that any additional controls are in place before processing.

4.2 Materials and Equipment

4.2.1 Special Tools and Equipment

NOTE *The list of special tools and equipment is not an all inclusive list and additional tools and equipment may be used as necessary.*

Waste Handling Technician or Supervision

[1] **ENSURE** that the following special tools and equipment are available, as required:

- Banding tool
- Cut resistant (e.g., HexArmor™, leather, or leather palm mechanics) gloves
- Cutting tool (e.g., utility knife or PVC cutter)
- Drum dolly
- Hacksaw and blades
- Lead blankets
- ML-2 drum lift hinge pin retaining clips (e.g., E-clips)
- Non-sparking hand drill (hand crank or electric) with a speed selector and drill bits
- Non-sparking tools for separating and processing waste
- Permanent marker
- Portable HEPA-filter exhaust system
- Removable lead glass windows
- Safety glasses with side shields
- Tools for separating and processing waste
- Two-wheel dolly
- WCATS mobile device
- WCG metal bucket

4.2.2 Consumables

NOTE *The list of consumables is not an all inclusive list and additional consumables may be used as necessary.*

Waste Handling Technician or Supervision

[1] **ENSURE** that the following consumables are available, as required:

- 3 Liters Carbon Spheroids or MET-L-X
- Bag-off bags (filtered or unfiltered)
- Banding buckles
- Banding material
- Binding ties
- Chemwipes or equivalent
- Drum labels
- Fantastik or equivalent
- Kitty Litter/Zeolite® absorbent
- Lead or lead equivalent WCG gloves
- Litmus paper
- Nitrile gloves
- Plastic waste bags
- Tape (duct or vinyl)
- Velcro®
- Wire rope inspection cloth (e.g., cheese cloth)

4.2.3 Measurement and Test Equipment (M&TE)

Waste Handling Technician or Supervision

[1] **ENSURE** that the following measuring and test equipment are available, as required:

- Platform scale
- WCG scale

4.3 Field Preparation

Waste Handling Technician or Supervision

[1] **(S) IF** performing any section except Section 8.1, Bag On Daughter Drum, Bagport, or Gloveport, without bagging in waste material,
THEN ENSURE that Building TA-50-69 is in the OPERATION MODE in accordance with EP-WCRR-FO-DOP-0201, WCRRF and Building TA-50-69 TSR Mode Change, and **CHECK** (√) OPERATIONS on Attachment 1, WCRRF WCG Waste Processing Data Sheet. (TSR 1.2)

4.3 Field Preparation (continued))

[2] **($) IF** performing Section 8.1,
AND waste material is **NOT** being introduced into the WCG,
THEN ENSURE that Building TA-50-69 is in the OPERATION or WARM STANDBY MODE in accordance with EP-WCRR-FO-DOP-0201, and **CHECK** (√) OPERATION or WARM STANDBY on Attachment 1. (TSR 1.2)

[3] **ENSURE** that the WCRRF Operations Center has authorized the performance of this procedure.

[4] **IF** performing one of the following sections:
Section 5, Parent Waste Container Preparation,
Section 6, WCG Parent Drum Loading/Unloading,
Section 10, WCG Waste Processing,
THEN:

[A] **ENSURE** that the weekly Platform Scale calibration verification has been performed in accordance with EP-WCRR-WO-DOP-0239, Verifying WCRRF Scales.

[B] **RECORD** the platform scale equipment/serial number and calibration due date on Attachment 1.

[C] **IF** the platform scale exceeds the calibration due date,
THEN NOTIFY the WCRRF Operations Center of the discrepancy, and
REQUEST the applicable actions.

[5] **IF** performing Section 10,
THEN:

[A] **ENSURE** that preprinted Item Identification Number (ID) labels and Poly-Chlorinated Biphenyl (PCB) Item Number labels are obtained from the Waste Management Coordinator.

[B] **($) ENSURE** that WCG contains three 1-Liter containers of carbon spheroids or MET-L-X, and **DOCUMENT** (initials and date) on Attachment 1. (SAC 5.10.1.7.1)

4.3 Field Preparation (continued)

[C] **ENSURE** that the required number of daughter drums have been prepared in accordance with EP-WCRR-WO-DOP-0221, Preparing and Closing 55-gal Daughter Drum Assemblies.

[D] **REVIEW** Appendix 2, WCRRF Allowable Container Types For Remediation.

[E] **ENSURE** that Prohibited Item Collection Containers (aerosol and pressurized cylinders) or previously initiated Prohibited Item Collection Containers are available, as necessary, and that the Prohibited Item Collection Containers (Holdup Container) have been generated in WCATS and have been labeled.

NOTE *The daughter waste containers (e.g., 55-gal drums) may be prepared in advance of the waste container remediation activity and at a location other than the processing area. As such, the lids may be temporarily placed on the daughter waste containers to allow them to be safely transported to the processing area.*

[F] **ENSURE** that a sufficient number of daughter waste containers (e.g., 55-gal drums) are available, as necessary.

[6] **($) IF** performing Section 10,
AND the parent container TRU-waste material inventory value is greater than 300 PE-Ci equivalent combustible waste,
THEN ENSURE a STATIONARY FIRE WATCH has been established, and
DOCUMENT (Initial and Date) on Attachment 1. (SAC 5.10.1.7.2)

NOTE *The Technical Safety Requirements for WCRRF specify that a critical lift plan is required for lifts and forklift movements involving DEGRADED or LOSS OF INTEGRITY drums. Additionally a critical lift plan is required in accordance with the requirements of P101-25, Cranes, Hoists, Lifting Devices, and Rigging Equipment, such as when the weight of the parent drum is greater than 75% of the WCG drum lift rated capacity (624 lb x .75 = 468 lb).*

[7] **IF** performing Section 6,
THEN:

[A] **DETERMINE** whether the parent drum is a degraded or loss of integrity drum, or whether the parent drum weight is greater than 468 lb but less than or equal to 624 lb, and **CHECK** (√) YES or NO on Attachment 1.

4.3 Field Preparation (continued)

NOTE 1 *The Person-in-Charge (PIC) appointed for the safe handling of critical loads and for the safe handling of non-critical items in, around, or above spaces in which critical items are located* ***SHALL*** *be trained in accordance with P101-25.*

NOTE 2 *WCRRF drum lift operations is a pre-engineered lift in accordance with P101-25 and require a Critical Lift Plan when the lift satisfies the critical lift criteria of P101-25. Critical lifts executed by LANL personnel* ***SHALL*** *be performed and documented in accordance with Appendix 1, WCRRF Drum Lift Critical Lift Plan (P101-25, Attachment B). Subcontract personnel* ***SHALL*** *comply with the safety and health requirements documented in contractual agreements with LANL and may use the information provided in Appendix 1.*

NOTE 3 *The WCG Drum Lift is a pre-engineered and an approved critical lift. Some items in Appendix 1,* are already pre-populated, therefore the PIC will be required to complete the remaining items and sections left blank.

NOTE 4 *Appendix 1 is a pre-engineered critical lift plan for degraded or loss of integrity drums. Once the Appendix 1 has been completed for the first waste container, the paperwork may be duplicated for each additional lift with the following conditions:*

- The critical lifts performed are in the same shift
- The critical lift team members do not change (i.e., PIC, Crane Operator)
- The critical lift activities performed are the same for each drum handled as specified in Appendix 1

[B] **($) IF** the parent drum is a degraded or loss of integrity drum, (AC 5.10.3.1) **OR** the parent drum weight is greater than 468 lb but less than or equal to 624 lb, **THEN GENERATE** a critical lift plan.

4.3 Field Preparation (continued)

WARNING

1. **Performance of a pre-operational inspection of the WCG drum lift (Form 1489), SHALL ensure that the entire length of the drum lift cable is inspected. This will require that the drum lift be exercised from the full up to the full down positions.**

2. **The drum lift pendant operator is to announce operation of the lift before raising or lowering the drum and all personnel are to stand clear and to the side of drum movement in order to prevent personnel injuries.**

NOTE *The inspection criteria identified as N/A on Appendix 3, Example Preoperational Inspection record for Overhead Cranes and Hoists, are not required to be performed.*

[C] **IF** performing Section 6 for the first time for the day,
THEN PERFORM a pre-operational inspection of the WCG drum lift components in accordance with P101-25 by completing the applicable sections of Form 1489.

[8] **IF** performing WCG operations (e.g., Section 10, WCG Waste Processing),
THEN:

[A] **REVIEW** the WCG glove change due date marked on all WCG gloves.

[B] **IF** the WCG glove change due date marked on the WCG glove has been exceeded, **OR** a WCG glove or bag-in/bag-out bag fails the inspection,
THEN:

[a] **STOP** operations.

[b] **IDENTIFY** the WCG glove or bag-in/bag-out bag as out-of-service.

[c] **NOTIFY** supervision and an RCT for the applicable actions in accordance with EP-DIV-AP-20047.

4.3 Field Preparation (continued)

NOTE *WCG gloves with a glove change due date that has been exceeded are <u>not</u> required to be inspected in accordance with the following step.*

[C] **INSPECT** the internal and external surfaces of each WCG glove and bag-in/bag-out bag for the following:

- Cracks
- Cuts
- Discoloration
- Exposed color of the lead liner, if present
- Layer separations
- Natural degradation
- Obvious physical signs of deterioration
- Punctures
- Radiological contamination (internal only)
- Splits
- Stiffness
- Surface deposits/debris

[D] **CHECK** (√) SAT or UNSAT on Attachment 1, and **DOCUMENT** the completion of the WCG glove inspection by signing and dating on Attachment 1.

[9] **ENSURE** that glovebox inspections have been completed in accordance with EP-DIV-AP-20047.

[10] **IF** Section 10.4, Waste Splitting Activities, is to be performed,
THEN ENSURE that Low-Level Waste Characterization personnel are available, as necessary.

[11] **IF** this procedure is being performed as a High/Complex Hazard activity as determined in Section 4.1, Planning and Coordination,
THEN:

[A] **ENSURE** that the temporary lead glass windows have been attached (e.g., Velcro®) to the inside of the applicable WCG windows.

[B] **ENSURE** that lead or lead equivalent gloves have been installed on the WCG gloveports.

[C] **ENSURE** that lead blankets have been placed along the bottom of the WCG.

4.3 Field Preparation (continued)

NOTE 1 *The following step may be performed out of sequence and may be performed in Building TA-50-37 (Artic).*

NOTE 2 *The TRU DRUM PREPARATION task on the WCATS mobile device or desktop application may be performed in conjunction with the performance of the physical build of a POC.*

[12] **IF** a POC is to be used,
AND the POC is to be bagged onto the WCG,
THEN:

[A] **OBTAIN** a POC bag-on bag.

[B] **APPLY** vinyl tape to the POC bag-on bag, with a smear pad centered on the tape, over the filter.

[C] **INFLATE** the POC bag-on bag with air from a compressed air source.

[D] **INSPECT** the POC bag-on bag for damage, cuts, or leaks by looking, listening, and feeling.

[E] **STRETCH** the POC bag-on bag's bungee cord, and **INSPECT** the bungee cord for cuts or damage.

[F] **IF** the POC bag-on bag or bungee cord fails the inspection,
THEN:

[a] **IDENTIFY** (e.g., tag or mark) the failed item indicating that item is defective.

[b] **SEGREGATE** the failed item in order to prevent the item from being used.

4.3 **Field Preparation (continued)**

NOTE 1 *A Quality Assurance (QA) representative may be contacted for assistance with the NCR process.*

NOTE 2 *The NCR may be initiated at an operationally convenient time.*

[c] **ENSURE** that an NCR is initiated in accordance with P330-6, Nonconformance Reporting, as required.

[d] **REPLACE** the defective item.

[e] **GO** to Step 4.3[12][A].

NOTE *The following step may be performed out of sequence to allow for the bulk inspection of liners in order to improve operational efficiencies.*

[G] **OBTAIN** and **VISUALLY INSPECT** a POC plastic/cardboard liner ensuring the exterior surfaces are smooth.

[H] **IF** POC plastic/cardboard liner fails the inspection,
THEN:

[a] **IDENTIFY** (e.g., tag or mark) the POC plastic/cardboard liner indicating that the POC plastic/cardboard liner is defective.

[b] **SEGREGATE** the POC plastic/cardboard liner in order to prevent the item from being used.

NOTE 1 *A Quality Assurance (QA) representative may be contacted for assistance with the NCR process.*

NOTE 2 *The NCR may be initiated at an operationally convenient time.*

[c] **ENSURE** that an NCR is initiated in accordance with P330-6, Nonconformance Reporting, as required.

[d] **REPLACE** the POC plastic/cardboard liner.

[e] **GO** to Step 4.3[12][G].

4.3 Field Preparation (continued)

[I] **PLACE** the POC plastic/cardboard liner into the POC bag-on bag.

[J] **PLACE** the POC plastic/cardboard liner and bag into the POC pipe component.

[K] **ENSURE** that excess POC bag-on bag is placed inside of the POC pipe component.

[L] **PLACE** the POC pipe component lid on the POC pipe component and **TIGHTEN** the lid sufficiently to hold the lid on the POC pipe component.

[M] **PLACE** the POC drum lid on the POC drum and **TIGHTEN** the closure ringbolt sufficiently to hold the drum lid in place.

[13] **ENSURE** that the new daughter waste containers (e.g., POCs and 55-gal drums) have been created in WCATS desktop application using the TRU DRUM PREPARATION application and that the Shorty barcode labels have been applied to the new daughter waste containers (e.g., POCs and 55-gal drums) in accordance with EP-DIV-DOP-20043, LTP TRU Waste Container Labeling.

5. PERFORMANCE—PARENT WASTE CONTAINER PREPARATION

This section is a stand-alone section and may be performed independently of or in conjunction with other Performance sections.

NOTE 1 *Radiological surveys may be performed as determined necessary [e.g., by an RP representative (e.g., RCT)] anytime during the performance of this procedure.*

NOTE 2 *All manual drum movement will be performed in accordance with Appendix 7, Manual Drum Movements Special Instructions and EP-DIV-Policy-20057, EWMO Health and Safety Policy-Manual Movement.*

Waste Handling Technician

[1] **ENSURE** that the prerequisite actions have been completed.

NOTE *Steps 5.[2] through 5.[4] may be performed in Building TA-50-37 (Artic).*

[2] **OBTAIN** an unfiltered bag-off bag or a filtered bag-off bag, and **TAPE OVER** the inside and outside filter openings of a filtered bag-off bag, as applicable.

CAUTION

Care should be exercised when not to over inflate the filtered bag. Apply only enough air to inspect for leaks. (e.g., pins holes, leakage around filter attachment points). Failure to comply with this caution could lead to overstressing the filter and possible damage to the filtered bag.

[3] **INFLATE** the filtered or no filtered bagout bag carefully and slowly while sealing the bag (i.e. securing opening with hand).

[4] **INSPECT** the bag-off bag for damage or cuts examining by sight, sound, and feel.

[5] **IF** the bag-off bag does **NOT** hold the air,
THEN:

[A] **IDENTIFY** (e.g., tag or mark) the bag-off bag indicating that the bag-off bag is defective.

[B] **SEGREGATE** the bag-off bag in order to prevent the item from being used.

5. PERFORMANCE—PARENT WASTE CONTAINER PREPARATION (continued)

NOTE *The NCR may be initiated at a time that is operationally convenient.*

[C] **ENSURE** that an NCR is initiated in accordance with P330-6, Nonconformance Reporting.

[D] **GO** to Step 5.[2].

[6] **TAPE** the drum closure ringbolt in order to prevent tearing or cutting the unfiltered bag-on bag.

[7] **IF** the drum to be processed is **NOT** a degraded or loss of integrity drum, **THEN CUT** off the bottom of a bag-off bag approximately 27 to 30 inches from the bottom of the bag-off bag in order to create a bag-off sleeve.

[8] **SLIDE** the bag-off bag over the top of the drum down to between the second and third rolling hoops (from the top) ensuring that the first and second rolling hoops (from the top) are covered.

NOTE *Enough room must be left between the tape and the drum closure ringbolt in order for the drum closure ring to be removed without damaging the bag-on bag.*

[9] **WRAP** tape (vinyl or duct) around the container so that the bag-off bag is tightly bound approximately halfway between the second and third rolling hoops near the top of the drum and overlapping the bag-off bag onto the drum.

[10] **ENSURE** that the drum wrapping (e.g., tape and bag-off bag) is airtight and no air pockets are present.

WARNING

Placement of duct tape below top rolling hoop may vary to ensure the surface area selected is free of abnormalties (e.g., dents, scrapes). Failure to comply with this could lead to an improper seal and potential unwanted radiological contamintation.

[11] **IF** the abnormalities (e.g., dents, scrapes) are discovered above the top rolling hoop, **THEN WRAP** duct tape around the drum just below the top rolling hoop on a surface that does not container abnormalities (e.g. dents, scrapes.

5. PERFORMANCE—PARENT WASTE CONTAINER PREPARATION (continued)

[12] **WRAP** duct tape around the drum just above the top rolling hoop on a surface that does not contain abnormalities (e.g., dents, scrapes).

CAUTION

Improper placement of the banding material over the drum hoop may result in movement and banding material slipping down the drum. Do not place banding material over drum hoop.

[13] **PLACE** banding material around the drum over the installed duct tape and **ENSURE** banding material is not placed over the drum hoop.

[14] **TIGHTEN** and **BUCKLE** the banding material with a banding tool.

[15] **COVER** the banding buckle with duct tape to prevent bag tears.

[16] **ROLL DOWN** the remaining bag-off bag around drum.

NOTE *The following two steps may be performed just before loading the drum on the WCG drum lift.*

[17] **IF** items (e.g., gloves or tools) are to be bagged into the WCG with the Prepared Parent Drum,
THEN SECURE the items to the top of the Prepared Parent Drum.

[18] **WEIGH** the Prepared Parent Drum with items secured to the drum top, as applicable, and **RECORD** the Prepared Parent Drum Weight on Attachment 1.

[19] **IF** the Prepared Parent Drum Weight is greater than or equal to 624 lb,
THEN:

[A] **STOP** the work activity.

NOTE *The WCRRF Operations Center notifies the Transuranic (TRU) Waste Disposition Project (WDP) Operations Manager (OM) or designee and the Shift Operations Supervisor (SOS) of the discrepancy.*

[B] **NOTIFY** the WCRRF Operations Center of the discrepancy.

5. PERFORMANCE—PARENT WASTE CONTAINER PREPARATION (continued)

[C] **REQUEST** the applicable actions from the SOS or designee.

[20] **RECORD** the following information on the parent drum lid using a permanent marker:

- Parent drum number
- Parent drum weight
- Date
- Platform scale serial number
- Platform scale calibration due date

6. PERFORMANCE—WCG PARENT DRUM LOADING/UNLOADING

NOTE 1 *Radiological surveys may be performed as determined necessary [e.g., by an RP representative (e.g., RCT)] anytime during the performance of this procedure.*

NOTE 2 *All manual drum movement will be performed in accordance with Appendix 7, Manual Drum Movements Special Instructions and EP-DIV-Policy-20057, EWMO Health and Safety Policy-Manual Movement.*

6.1 WCG Drum Lift Daily Inspection

This sub-section is a stand-alone sub-section and may be performed independently of or in conjunction with other sub-sections.

This inspection is to be performed once each work day before the WCG drum lift is to be used to hoist a waste drum.

NOTE *The individual performing the WCG drum lift inspection **SHALL** be at a minimum a certified Qualified Crane Operator.*

Waste Handling Technician

[1] **OBTAIN** and **REVIEW** the previously completed copy of Attachment 2, WCRRF WCG Drum Lift Inspection Data Sheet.

[2] **OBTAIN** a new copy of attachment 2, and **RECORD** the inspection date on Attachment 2.

[3] **RECORD** any previously identified wire rope damage in Table 3-1 or Table 3-2, or N/A as applicable, on Attachment 2, and **CHECK** (√) applicable box in the Previously Identified Damage column in Table 3-1 or Table 3-2, as applicable, on Attachment 2.

[4] **RECORD** the number of threads exposed out the end of the shaft bolt locknut on the upper, middle, and lower pulley shaft bolts from the previous inspection on Attachment 2.

6.1 WCG Drum Lift Daily Inspection (continued)

[5] **DETERMINE** and **RECORD** on Attachment 2 the current number of threads exposed out the end of the shaft bolt locknut on the upper, middle, and lower pulley shaft bolts (see illustration below).

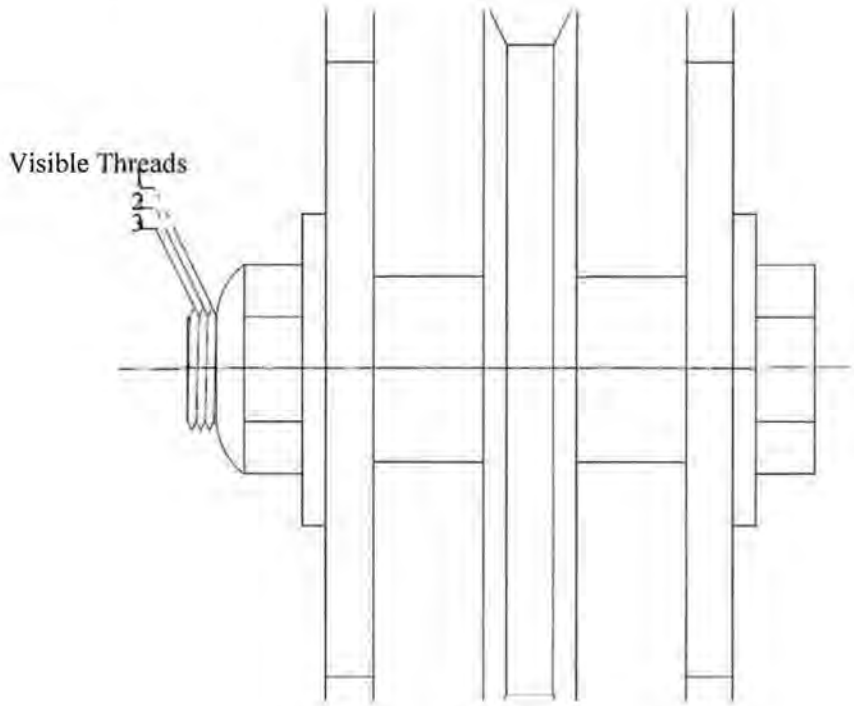

[6] **DETERMINE** whether the shaft bolt end is flush with or extends out of the outer end of the shaft bolt locknut, and **CHECK** (√) YES or NO on Attachment 2.

[7] **INSPECT** the upper, middle, and lower pulley shaft bolts for any signs of wear between the shaft bolt and the support flanges (e.g., shaft not perpendicular to the flange plate), and **CHECK** (√) SAT or UNSAT for each shaft bolt on Attachment 2.

WARNING

The drum lift pendant operator is to announce operation of the lift before raising or lowering the drum and all personnel are to stand clear and to the side of drum movement in order to prevent personnel injuries.

[8] **ENSURE** that the drum trolley is in the full-down position.

6.1 WCG Drum Lift Daily Inspection (continued)

WARNING

Cut resistant (e.g., leather or leather palm mechanics) gloves are to be worn while inspecting the drum trolley wire rope and the cloth is to be held loosely in order to prevent skin punctures resulting from broken wires of the wire rope.

[9] **INSPECT** the entire length of the exposed, upper wire rope from the top of the drum trolley to the wire rope hoist drum by loosely gripping the cloth (e.g., cheese cloth) while sliding the cloth along the length of the wire rope, and **CHECK** (√) YES or NO to indicate whether any new damage is identified on Attachment 2 to indicate whether any upper wire rope damage is discovered.

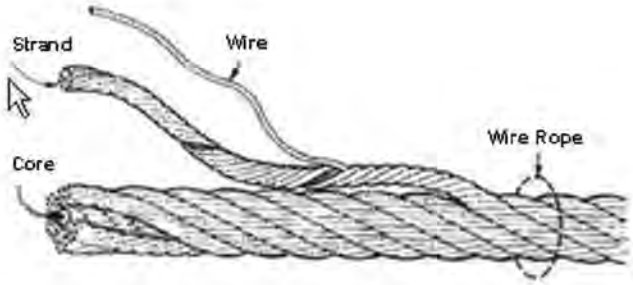

[10] **IF** the cloth snags on the wire rope,
THEN VISUALLY INSPECT the wire rope snag location for damage, and
DOCUMENT the results of the inspection including the location of the damage in Table 3-1, Upper Wire Rope Damage, on Attachment 2.

WARNING

The drum lift pendant operator is to announce operation of the lift before raising or lowering the lift and all personnel are to stand clear and to the side of drum movement in order to prevent personnel injuries.

[11] **ENSURE** that the drum trolley is in the full-up position.

6.1 WCG Drum Lift Daily Inspection (continued)

WARNING

Cut resistant (e.g., leather or leather palm mechanics) gloves are to be worn while inspecting the drum trolley wire rope and the cloth is to be held loosely in order to prevent skin punctures resulting from broken wires of the wire rope.

[12] **INSPECT** the entire length of the exposed, lower wire rope from the top of the drum trolley to the wire rope hoist by loosely gripping the cloth (e.g., cheese cloth) while sliding the cloth along the length of the wire rope, and **CHECK** (√) YES or NO to indicate whether any new damage is identified on Attachment 2 to indicate whether any lower wire rope damage is discovered.

[13] **IF** the cloth snags on the wire rope,
THEN VISUALLY INSPECT the wire rope snag location for damage, and **DOCUMENT** the results of the inspection including the location of the damage in Table 3-2, Lower Wire Rope Damage, on Attachment 2.

[14] **IF** there are six randomly distributed broken wires in one rope lay or three broken wires in one strand in one rope lay,
THEN:

[A] **CHECK** (√) UNSAT for the wire rope inspection on Attachment 2.

[B] **GO** to Step 6.1[16].

[15] **CHECK** (√) SAT for the wire rope inspection on Attachment 2.

[16] **IF** UNSAT was checked (√) for any of the WCG inspections,
THEN:

[A] **STOP** the work activity.

[B] **RECORD** Printed name, signature, Z# and **DATE** on Attachment 2.

NOTE *The WCRRF Operations Center notifies the WDP SOM or designee and the Cognizant System Engineer (CSE) of the discrepancy.*

[C] **NOTIFY** the WCRRF Operations Center of the discrepancy.

[D] **DOCUMENT** the notifications and discrepancies in the Comments section of Attachment 2.

6.2 Parent Drum Loading

This sub-section is a stand-alone sub-section and may be performed independently of or in conjunction with other sub-sections.

Waste Handling Technician

[1] **ENSURE** that the prerequisite actions have been completed.

RCT

[2] **PERFORM** radiological surveys as necessary during the waste container handling evolutions.

Waste Handling Technician

[3] **IF** radiological contamination is detected,
THEN FOLLOW the instructions of the RCT.

[4] **RECORD** the Processing Date (current date) on Attachment 1.

[5] **IF** lead blankets are to be used as radiological shielding on the parent drum,
THEN:

[A] **WEIGH** the lead blankets, as necessary, and **RECORD** the lead blanket's weight on Attachment 1.

[B] **SUM** the Lead Blanket Weights and the Prepared Parent Drum Weight, and **RECORD** the Total Prepared Parent Drum Weight (drum and lead blankets) on Attachment 1.

[C] **GO** to Step 6.2[7].

[6] **RECORD** the Total Prepared Parent Drum Weight (parent drum weight) on Attachment 1.

[7] **($) DETERMINE** whether the Total Parent Drum Weight is less than 624 lb, and **CHECK** (√) SAT or UNSAT for the Total Parent Drum weighing less than 624 lb on Attachment 1. (SR 4.5.1)

6.2 Parent Drum Loading (continued)

[8] **IF** the Total Parent Drum Weight is greater than or equal to 624 lb,
THEN:

[A] **STOP** the work activity.

NOTE *The WCRRF Operations Center notifies the TRU WDP OM or designee and the SOS of the drum status.*

[B] **NOTIFY** the WCRRF Operations Center, of the drum status.

[C] **REQUEST** the applicable actions from the SOS or designee.

NOTE *P101-25 provides instructions for a conducting a critical lift.*

[9] **($) IF** the prepared parent drum is a degraded or loss of integrity drum, (AC 5.10.3.1)
OR the parent drum weight is greater than 468 lb,
THEN ENSURE that the prepared parent drum is loaded in compliance with Appendix 1, or P101-25 Attachment B Critical Lift plan and this sub-section.

[10] **ENSURE** that the drum lift key has been obtained from the key box.

[11] **ENSURE** that the drum lift key has been inserted, and has been turned to ON in order to establish power to the drum lift.

[12] **ENSURE** that the drum lift has been lowered to the lower limit switch or until the bellyband of the lift cradle can grasp the drum evenly using the drum lift pendent.

[13] **IF** the WCG parent drum port cover is present,
THEN REMOVE the WCG parent drum port cover, and **SET** the WCG parent drum port cover aside.

[14] **ENSURE** that respiratory protection is worn as required by the applicable RWP.

[15] **PERFORM** a visual inspection of the drum lid ringbolt assembly to determine if the drum lid ringbolt is damaged, degraded, or seized in the drum lid ring lugs.

6.2 Parent Drum Loading (continued)

[16] **IF** the ringbolt is damaged, degraded or seized in the drum lid ring lugs,
THEN:

Waste Handler Technician One

[A] **NOTIFY** Supervision for guidance and direction.

[B] **OBTAIN** approval from SOS to cut bolt.

[C] **PREP** parent and area around drum lid ring lugs as directed by RCT.

[D] **PLACE** a piece of hard plastic or Teflon behind the drum ring-bolt assembly and the drum as a barrier to protect from potential nicks or cuts to liners that may be encountered during sawing of drum lid ringbolt.

Waste Handler Technician Two

[E] **SLOWLY CUT** the drum lid ringbolt between the drum ring lugs ½ way through using a hacksaw.

[F] **GO** to Step 6.2[18].

[17] **LOOSEN** the drum closure ringbolt jam nut, as necessary, <u>without loosening the closure ringbolt</u>.

NOTE *The retaining clip (e.g., E-clip) must be an ML-2 component.*

[18] **INSPECT** the four drum lift hinge pins to determine whether all hinge pins have retaining clips (e.g., E-clips) attached to the bottom of the hinge pins and **CHECK** SAT or UNSAT on Attachment 1.

[19] **IF** a retaining clip is missing from a hinge pin,
THEN:

[A] **INSPECT** the hinge pin for damage and **DOCUMENT** deficiencies including hinge pin location in the Comments section of Attachment 1.

[B] **IF** the hinge pin is damaged or the hinge pin does **NOT** completely pass through the hinge,
THEN:

6.2 Parent Drum Loading (continued)

[a] **STOP** the work activity.

[b] **NOTIFY** the WCRRF Operations Center of the hinge pin status.

[c] **REQUEST** the applicable actions from the SOS or designee, and **DOCUMENT** the condition and actions taken in the Comments section of Attachment 1.

[C] **ATTACH** a retaining clip to the hinge pin, ensuring that the clip is properly seated in the groove at the bottom of the hinge pin.

[D] **DOCUMENT** initials, Z number, and date or N/A on Attachment 1 to indicate that the retaining clip was replaced.

[20] **POSITION** the prepared parent drum on the drum lift with the prepared parent drum closure ringbolt accessible for lid removal when the drum closure ring is inside of the WCG.

[21] **CLOSE** and **SECURE** the bellyband on the prepared parent drum, ensuring that the bag-off sleeve does not get caught on the bellyband.

[22] **ENSURE** that the retaining clips are properly seated in the groove at the bottom of the hinge pins.

WARNING

Failure to ensure the Trolley Clamp is positioned next to the WCG prior to lowering or raising the drum lift could lead to equipment damage and personnel injury.

[23] **IF** the Trolley Rail clamp is to be used,
AND is not on the drum rail,
THEN PLACE the trolley rail clamp on the rail and **POSITION** next to the WCG.

[24] **RAISE** the prepared parent drum to the WCG parent drum port using the drum lift pendent, leaving an adequate gap (approximately 12 in.) to attach the bag-off sleeve to the WCG parent drum port.

[25] **BAG ON** the prepared parent drum to the WCG parent drum port in accordance with section 7.1, Parent Drum Bag On, and **RETURN** to the following step.

6.2 Parent Drum Loading (continued)

WARNING

Downward movement of the parent drum could result in the drum bag-off bag separating from the WCG drum port and resulting in the spread of radiological contamination.

[26] **TURN** the drum lift key to OFF, and **REMOVE** the drum lift key, as applicable.

[27] **PLACE** the drum lift key in the key box, as applicable.

[28] **IF** the parent drum is to remain attached to the WCG overnight,
THEN OBTAIN the Environmental and Waste Management Facility Operations-Facility Operations Director (EWMO-FOD) or Designee (i.e., Operations Manager) approval to leave the parent drum attached to the WCG overnight, and **DOCUMENT** the approval on Attachment 1.

[29] **IF** the EWMO-FOD does **NOT** approve leaving a parent drum attached to the WCG overnight,
THEN ENSURE that the parent drum is removed before the end of the work day.

[30] **PROCESS** the waste in the parent drum in accordance with Section 10, WCG Waste Processing.

6.3 Parent Drum Unloading

This sub-section is a stand-alone sub-section and may be performed independently of or in conjunction with other sub-sections.

Waste Handling Technician

[1] **ENSURE** that the prerequisite actions have been completed.

[2] **ENSURE** that the parent drum has been bagged off of the WCG in accordance with Section 7.2, Parent Drum Bag Off.

RCT

[3] **PERFORM** radiological surveys as necessary during the waste container handling evolutions.

6.3 Parent Drum Unloading (continued)

Waste Handling Technician

[4] **IF** radiological contamination is detected,
THEN FOLLOW the instructions of the RCT.

[5] **ENSURE** that the drum lift key has been obtained from the key box.

[6] **ENSURE** that the drum lift key has been inserted, and **TURN** the drum lift key to ON in order to establish power to the drum lift.

WARNING

The drum lift pendant operator is to announce operation of the lift before raising or lowering the drum and all personnel are to stand clear and to the side of drum movement in order to prevent personnel injuries.

[7] **POSITION** a drum dolly to receive the parent drum.

WARNING

Personnel SHALL <u>not</u> place any portion of the body (e.g., hands or arms) under an elevated load in order to prevent serious personal injury.

[8] **LOWER** the parent drum down onto the drum dolly using the drum lift pendent.

[9] **OPEN** the drum bellyband, and **UNLOAD** the parent drum from the drum lift.

[10] **IF** no additional drums are to be loaded with the WCG drum lift,
THEN:

[A] **SECURE** the drum bellyband.

[B] **RAISE** the drum lift to the desired height for stowing using the drum lift pendent.

[C] **TURN** the drum lift key to OFF, and **REMOVE** the drum lift key.

[D] **PLACE** the drum lift key in the key box.

6.3 Parent Drum Unloading (continued)

[11] **TAPE** the bagged off parent drum horsetail using vinyl tape.

[12] **PLACE** a layer of containment (e.g., the cutoff end of the parent drum bagged off bag or piece of plastic) over the drum lid.

[13] **TAPE** the entire parent drum lid using vinyl tape.

NOTE 1 *The RCRA Hazardous Waste Codes of a parent container do not apply to the empty parent container or the empty parent container label when the empty parent container satisfies the RCRA definition of an empty container in 40 CFR 261.7, Residues of Hazardous Waste in Empty Containers.* http://edocket.access.gpo.gov/cfr_2009/julqtr/pdf/40cfr261.7.pdf.

NOTE 2 *The following steps may be performed at a time that is operationally convenient.*

[14] **OVERPACK** the empty parent drum in accordance with EP-WCRR-WO-DOP-1197, WCRRF Loading/Unloading SWB or 85-gal Drum.

[15] **MOVE** the empty parent drum to a transportainer in accordance with EP-WCRR-WO-DOP-1199, WCRRF and Building TA-50-69 Waste Container Receipt, Movement, and Transfer.

[16] **ENSURE** that the Inventory Control Personnel have been notified that the empty parent drum has been removed from Building TA-50-69.

7. PERFORMANCE—WCG PARENT DRUM BAG-ON/BAG-OFF OPERATIONS

NOTE 1 *Radiological surveys may be performed as determined necessary [e.g., by an RP representative (e.g., RCT)] anytime during the performance of this procedure.*

NOTE 2 *All manual drum movement will be performed in accordance with Appendix 7, and EP-DIV-Policy-20057, EWMO Health and Safety Policy-Manual Movement.*

7.1 Parent Drum Bag On

This sub-section is a stand-alone sub-section and may be performed independently of or in conjunction with other sub-sections.

Waste Handling Technician

[1] **ENSURE** that the prerequisite actions have been completed.

[2] **WEAR** respiratory protection as required by the applicable RWP.

RCT

[3] **PERFORM** radiological surveys as necessary during the waste container handling evolutions.

Waste Handling Technician

[4] **IF** radiological contamination is detected,
THEN FOLLOW the instructions of the RCT.

[5] **ENSURE** the parent drum has been loaded onto the WCG in accordance with Section 6.2, Parent Drum Loading.

[6] **ENSURE** that the WCG has been wiped down to reduce radiological contamination.

[7] **SET UP** a portable HEPA-filter exhaust system (MAC-21) in order to increase local airflow at the site of the horsetail during the cutting operation.

[8] **REMOVE** the retaining band from the WCG parent drum port bag-off stub.

[9] **VISUALLY INSPECT** the WCG parent drum port bag-off stub for damage (e.g., tears).

7.1 Parent Drum Bag On (continued)

[10] **IF** the WCG parent drum port bag-off stub is damaged (e.g., tears),
THEN:

[A] **REPAIR** the damage (e.g., tears) using vinyl tape.

[B] **REQUEST** an RCT survey for radiological contamination.

[C] **IF** radiological contamination is detected,
THEN FOLLOW the instructions of the RCT.

[11] **SLIDE** the bag-off stub down to the port opening side of the ring closest to the WCG.

[12] **SWIPE** around the WCG parent drum port with a maslin smear, and **REQUEST** an RCT monitor the swipe for radiological contamination.

[13] **IF** radiological contamination is detected,
THEN FOLLOW the instructions of the RCT.

NOTE *The new bag-on bag is attached to the parent drum.*

[14] **SLIDE** the new bag-on bag over the old bag-on bag stub to the inner ring as close as possible to the WCG.

[15] **APPLY** vinyl tape to the new bag-on bag where the retaining band buckle is to be placed.

[16] **SECURE** the new bag-on bag with the retaining band.

[17] **REMOVE** the bag-off stub from the WCG parent drum port, and **DROP** the bag-off stub into the glovebox.

7.1 Parent Drum Bag On (continued)

WARNING

The drum lift pendant operator is to announce operation of the lift before raising or lowering the drum and all personnel are to stand clear and to the side of drum movement in order to prevent personnel injuries.

[18] **ALTERNATELY RAISE** the parent drum and **GUIDE** the bag-on bag to prevent damage to the bag-on bag until the parent drum has been raised to the upper limit switch or until the drum is adequately inserted.

NOTE *The Trolley Rail Clamp is used at the discretion of the PIC, and/or when processing heavy drums to act as a rail stop to restrict forward drum movement when removing heavy items from drum into glovebox.*

[19] **IF** the Trolley Rail Clamp is to be used,
THEN:

[A] **SLIDE** the Trolley Rail Clamp against the drum trolley rail assembly next to the lifting fixture.

[B] **TIGHTEN** the Trolley Rail clamp handle clockwise to secure the clamp against the drum trolley.

7.2 Parent Drum Bag Off

This sub-section is a stand-alone sub-section and may be performed independently of or in conjunction with other sub-sections.

Waste Handling Technician

[1] **ENSURE** that the prerequisite actions have been completed.

[2] **WEAR** respiratory protection as required by the applicable RWP.

RCT

[3] **PERFORM** radiological surveys as necessary during the waste container handling evolutions.

7.2 Parent Drum Bag Off (continued)

Waste Handling Technician

[4] **IF** radiological contamination is detected,
THEN FOLLOW the instructions of the RCT.

[5] **IF** Trolley Rail Clamp was used,
THEN LOOSEN handle counterclockwise and **SLIDE** the Trolley Rail Clamp away from the drum trolley (towards the WCG).

[6] **PLACE** the drum lid and drum closure ring assembly on the parent waste drum.

[7] **IF** the parent drum closure ring **CANNOT** be properly attached to the parent drum,
AND the parent drum is empty,
THEN:

[A] **AFFIX** the closure ring, if possible, to the parent drum and **TAPE** the parent drum lid onto the drum using vinyl tape or equivalent.

[B] **GO** to Step 7.2[11].

NOTE *The removal of a parent drum from the WCG which contains waste material must be performed as a critical lift.*

[8] **IF** the parent drum closure ring **CANNOT** be properly attached to the parent drum,
AND the parent drum contains waste material,
THEN:

[A] **STOP** the activity and place waste material in a safe configuration (e.g., cover with a fire blanket).

[B] **NOTIFY** supervision and the WCRRF Operations Center of the discrepancy and **REQUEST** the applicable actions.

[9] **ENSURE** that the drum closure ringbolt jam nut is tightened against the non-threaded lug of the drum closure ring.

[10] **ENSURE** that duct tape has been placed on the drum closure ringbolt in order to prevent damage to the bag-off sleeve.

[11] **ENSURE** that the WCG has been wiped down to reduce radiological contamination.

7.2 Parent Drum Bag Off (continued)

[12] **SET UP** a portable HEPA-filter exhaust system (MAC-21) to increase local airflow at the site of the horsetail during the cutting operation.

[13] **OBTAIN** the drum lift key from the key box, as applicable.

[14] **INSERT** the drum lift key, and **TURN** the drum lift key to ON in order to establish power to the drum lift, as applicable.

WARNING

The drum lift pendant operator is to announce operation of the lift before raising or lowering the drum and all personnel are to stand clear and to the side of drum movement in order to prevent personnel injuries.

[15] **LOWER** the parent drum sufficiently to create a horsetail using the drum lift pendent.

[16] **INSPECT** the bag-off bag for damage (e.g., tears).

[17] **IF** bag-off bag is damaged (e.g., tears),
THEN:

[A] **REPAIR** the damage (e.g., tears) using vinyl tape.

[B] **REQUEST** an RCT survey for radiological contamination.

[C] **IF** radiological contamination is detected,
THEN FOLLOW the instructions of the RCT.

[18] **MIST** inside of the bag-off bag with spray cleaner and **RUB** the bag-off bag together to ensure the complete coverage of the spray cleaner in order to control contamination.

[19] **SQUEEZE** as much air as possible out of the bag-off bag.

[20] **GATHER** the bag-off bag and **COMPRESS** the bag-off bag in order to create a horsetail approximately 8 to 10 in. long.

[21] **TIGHTLY SECURE** the horsetail using one layer of filament and two layers of vinyl tape.

7.2 Parent Drum Bag Off (continued)

[22] **FIRMLY ATTACH** two binding ties near the center of the horsetail, approximately 6 in. apart.

[23] **IF** bagging off the last parent drum for the work day,
THEN FIRMLY ATTACH a second binding tie approximately 2 in. from the center of the horsetail on the WCG side of the horsetail.

NOTE *The excess part of the binding tie protruding through the binding tie latch is not to be cut off.*

[24] **COVER** the attached binding ties with vinyl tape.

Waste Handling Technician Three

[25] **POSITION** the horsetail cutters between the binding ties of the horsetail.

Waste Handling Technician One

[26] **GRASP** the top of horsetail.

Waste Handling Technician Two

[27] **GRASP** the bottom of horsetail.

WARNING

Extremities SHALL not be placed inside the jaws of the cutting tool in order to prevent personnel injury due to pinching.

Waste Handling Technician Three

[28] **CUT** the horsetail between the binding ties.

Waste Handling Technician One and Two

[29] **SIMULTANEOUSLY COVER** the cut stubs of the bag-off bag with vinyl tape.

[30] **ENSURE** that the cut-stubs have been covered with a final layer of vinyl tape, as directed by an RCT.

7.2 Parent Drum Bag Off (continued)

NOTE 1 *Used cheesecloth are to be disposed of as compactable waste or in an empty daughter as waste added in process to be bagged on the WCG.*

NOTE 2 *The following step may be performed out of sequence.*

Waste Handling Technician Three

[31] **WIPE** down the cutters used to cut the horsetail, place the cutters in a holder, and place the cutters in the designated staging area.

NOTE *Used cheesecloth are to be disposed of as compactable waste or in an empty daughter as waste added in process to be bagged on the WCG*

Waste Handling Technician

[32] **DECONTAMINATE**, as necessary, in accordance with RCT instructions.

[33] **REMOVE** the empty parent drum from the WCG drum lifting device in accordance with Section 6.3, Parent Drum Unloading.

8. PERFORMANCE—WCG DAUGHTER DRUM, BAGPORT, OR GLOVEPORT BAG-ON/BAG-OFF OPERATIONS

NOTE 1 *Radiological surveys may be performed as determined necessary [e.g., by an RP representative (e.g., RCT)] anytime during the performance of this procedure.*

NOTE 2 *All manual drum movement will be performed in accordance with Appendix 7, and EP-DIV-Policy-20057, EWMO Health and Safety Policy-Manual Movement.*

8.1 Bag On Daughter Drum, Bagport, or Gloveport

This sub-section is a stand-alone sub-section and may be performed independently of or in conjunction with other sub-sections.

NOTE *This section provides instructions for bagging onto the WCG at a daughter drum port, bagport, or gloveport.*

Waste Handling Technician

[1] **ENSURE** that the prerequisite actions have been completed.

[2] **IF** a daughter drum is to be bagged onto the WCG,
THEN ENSURE that the daughter drum has been prepared in accordance with EP-WCRR-WO-DOP-0221.

[3] **WEAR** respiratory protection as required by the applicable RWP.

RCT

[4] **PERFORM** radiological surveys as necessary during the waste container handling evolutions.

Waste Handling Technician

[5] **IF** radiological contamination is detected,
THEN FOLLOW the instructions of the RCT.

[6] **ENSURE** that the WCG has been wiped down to reduce radiological contamination.

[7] **IF** directed by an RCT to establish a portable HEPA-filter exhaust system,
THEN SET UP a portable HEPA-filter exhaust system (MAC-21)in order to increase the local airflow at the site of the horsetail during the cutting operation.

[8] **REMOVE** the retaining band from the bag-off stub.

8.1 Bag On Daughter Drum, Bagport, or Gloveport (continued)

[9] **VISUALLY INSPECT** under the retaining band of the previous drum/bagport/gloveport bag-off stub for damage (e.g., tears).

[10] **IF** the previous drum/bagport/gloveport bag-off stub is damaged (e.g., tears),
THEN SEAL the damaged area with vinyl tape.

[11] **SLIDE** the bag-off stub down to the port opening side of the ring closest to the WCG.

[12] **SWIPE** around the port with a maslin smear, and **REQUEST** an RCT monitor the swipe for radiological contamination.

[13] **IF** radiological contamination is detected,
THEN FOLLOW the instructions of the RCT.

[14] **SLIDE** the new bag-on bag over the old bag-on bag stub to the inner ring as close as possible to the WCG.

[15] **ADHERE** vinyl tape to the new bag-on bag where the retaining band buckle is to be placed.

[16] **SECURE** the new bag with the retaining band.

[17] **REMOVE** the bag-off bag stub and drop the bag-off bag stub into the daughter drum/bagport bag/gloveport bag, as applicable.

[18] **IF** bagging on a daughter drum,
THEN:

[A] **MOVE** the drum from the drum dolly to the vertical lift table.

[B] **MANUALLY RAISE** the drum to the appropriate height.

8.2 Bag Off Daughter Drum

This sub-section is a stand-alone sub-section and may be performed independently of or in conjunction with other sub-sections.

NOTE *This section provides instructions for bagging off a daughter drum from the WCG.*

Waste Handling Technician

[1] **ENSURE** that the prerequisite actions have been completed.

[2] **WEAR** respiratory protection as required by the applicable RWP.

RCT

[3] **PERFORM** radiological surveys as necessary during the waste container handling evolutions.

Waste Operator

[4] **IF** radiological contamination is detected,
THEN FOLLOW the instructions of the RCT.

[5] **ENSURE** that the WCG has been wiped down to reduce radiological contamination.

[6] **SET UP** a portable HEPA-filter exhaust system (MAC-21) in order to increase the local airflow at the site of the horsetail during the cutting operation.

[7] **MANUALLY LOWER** the vertical lift table.

[8] **INSPECT** the bag-off bag for damage (e.g., tears).

[9] **IF** the bag-off bag is damaged (e.g., tears),
THEN:

[A] **REPAIR** the damage (e.g., tears) using vinyl tape.

[B] **REQUEST** an RCT survey for radiological contamination.

[C] **IF** radiological contamination is detected,
THEN FOLLOW the instructions of the RCT.

8.2 Bag Off Daughter Drum (continued)

WARNING

Proper lifting techniques and buddy system SHALL be used when moving a daughter drum from the lift table to the drum dolly in order to prevent personnel injury and to prevent separating the daughter drum bag-off bag from the WCG daughter drum port.

NOTE *A VersaLift may be used to assist the lifting of a drum off of the vertical lift table.*

[10] **MOVE** the drum from the vertical lift table to a drum dolly.

[11] **MIST** inside of the bag-off bag with spray cleaner and **RUB** the bag-off bag together to ensure the complete coverage of the spray cleaner in order to control contamination.

[12] **SQUEEZE** as much air as possible out of the bag-off bag.

[13] **GATHER** the bag-off bag.

[14] **ROTATE** the drum <u>or</u> **COMPRESS** the bag-off bag (as applicable) in order to create a horsetail approximately 8 to 10 in. long.

[15] **TIGHTLY SECURE** the horsetail using one layer of filament and two layers of vinyl tape.

[16] **FIRMLY ATTACH** two binding ties near the center of the horsetail, approximately 6 in. apart.

NOTE *The excess part of the binding tie protruding through the binding tie latch is <u>not</u> to be cut off.*

[17] **COVER** the attached binding ties with vinyl tape.

Waste Handling Technician Three

[18] **POSITION** the horsetail cutters between the binding ties of the horsetail.

Waste Handling Technician One

[19] **GRASP** top of horsetail.

8.2 Bag Off Daughter Drum (continued)

Waste Handling Technician Two

[20] **GRASP** the bottom of the horsetail.

WARNING

Extremities SHALL not be placed inside the jaws of the cutting tool in order to prevent personnel injury due to pinching.

Waste Handling Technician Three

[21] **CUT** the horsetail between the binding ties.

Waste Handling Technician One and Two

[22] **SIMULTANEOUSLY COVER** the cut stubs of the bag-off bag with vinyl tape.

[23] **ENSURE** that the cut-stubs have been covered with a final layer of vinyl tape, as directed by an RCT.

NOTE 1 *Used cheesecloth are to be disposed of as compactable waste or in an empty daughter as waste added in process to be bagged on the WCG*

NOTE 2 *The following step may be performed out of sequence.*

Waste Handling Technician Three

[24] **WIPE** down the cutters used to cut the horsetail, place the cutters in a holder, and place the cutters in the designated staging area.

Waste Handling Technician

[25] **IF** the bag-off bag has a filter that is covered with tape,
THEN:

[A] **REMOVE** the tape from bag filter.

[B] **REQUEST** an RCT survey for radiological contamination.

[C] **IF** radiological contamination is detected,
THEN FOLLOW the instructions of the RCT.

8.2 Bag Off Daughter Drum (continued)

[26] **IF** a POC was bagged off of the WCG,
THEN GO to Step 10.2[13].

NOTE 1 *Waste containers with liquids (any amount or configuration) that have not been solidified (absorbed) must be managed on secondary containment pallets and have a FREE LIQUID label affixed.*

NOTE *All parent drum RCRA Hazardous Waste Codes are not assigned to a daughter drum when the reason (item) for assigning a RCRA Hazardous Waste Code to the parent drum has not been placed into the daughter drum. The WMC can assist with assigning the appropriate RCRA Hazardous Waste Codes to a drum.*

[27] **CLOSE** the daughter drum in accordance with EP-WCRR-WO-DOP-0221.

[28] **ENSURE** that the Inventory Control Personnel have been notified that daughter drums and an empty parent drum have been generated in Building TA-50-69.

9. PERFORMANCE—ITEM BAG-IN/BAG-OUT OPERATIONS

NOTE *Radiological surveys may be performed as determined necessary [e.g., by an RP representative (e.g., RCT)] anytime during the performance of this procedure.*

9.1 WCG Item Bag-Out

This sub-section is a stand-alone sub-section and may be performed independently of or in conjunction with other sub-sections.

Waste Handling Technician

[1] **ENSURE** that the prerequisite actions have been completed.

[2] **WEAR** respiratory protection as required by the applicable RWP.

RCT

[3] **PERFORM** radiological surveys as necessary during the waste container handling evolutions.

Waste Handling Technician

[4] **IF** radiological contamination is detected,
THEN FOLLOW the instructions of the RCT.

[5] **ENSURE** that a portable CAM is placed in the vicinity of the filtered bagout bag during WCG operations as directed by RP-1.

[6] **IF** a bag is required on the WCG port,
THEN:

[A] **ENSURE** that the WCG has been wiped down to reduce radiological contamination.

[B] **SET UP** a portable HEPA-filter exhaust system (MAC-21) and elephant trunk as close as possible to the filtered bagout bag in order to increase the local airflow at the site of the horsetail during the cutting operation.

NOTE *Glovebox negative pressure **SHALL** be used to the extent possible in order to remove excess air from the filtered bag-out bag during bagout operations.*

[C] **REMOVE** the retaining band from the drum/bagport/gloveport bag-out stub.

9.1 WCG Item Bag-Out (continued)

[D] **VISUALLY INSPECT** under the retaining band of the previous drum/bagport/gloveport bag-out stub for damage (e.g., tears).

[E] **IF** the previous drum/bagport/gloveport bag-out stub is damaged (e.g., tears), **THEN SEAL** the damaged area with vinyl tape.

[F] **SLIDE** the new bag-on bag over the old bag-on bag stub to the inner ring as close as possible to the WCG.

[G] **SWIPE** around the port with a maslin smear, and **REQUEST** an RCT monitor the swipe for radiological contamination.

[H] **IF** radiological contamination is detected,
THEN FOLLOW the instructions of the RCT.

[I] **SLIDE** the new bag-on bag over the old bag-on bag stub to the inner ring as close as possible to the WCG.

[J] **ADHERE** vinyl tape to the new bag-on bag where the retaining band buckle is to be placed.

[K] **SECURE** the new bag-on bag with the retaining band.

[L] **REMOVE** the bag-out bag stub and drop the bag-out bag stub into the daughter drum/bagport bag/gloveport bag, as applicable.

[7] **ENSURE** that the WCG has been wiped down to reduce radiological contamination.

[8] **ENSURE** a portable HEPA-filter exhaust system (MAC-21) and elephant trunk are set up as close as possible to the filtered bagout bag in order to increase the local airflow at the site of the horsetail during the cutting operation.

[9] **SLIDE** the item to be bagged out to the end of the bag-out bag.

[10] **INSPECT** the bag-out bag for damage (e.g., tears).

9.1 WCG Item Bag-Out (continued)

[11] **IF** the bag-out bag is damaged (e.g., tears),
THEN:

[A] **REPAIR** the damage (e.g., tears) using vinyl tape.

[B] **REQUEST** an RCT survey for radiological contamination.

[C] **IF** radiological contamination is detected,
THEN FOLLOW the instructions of the RCT.

[12] **MIST** inside of the bag-out bag with spray cleaner and **RUB** the bag-out bag together to ensure the complete coverage of the spray cleaner in order to control contamination.

[13] **SQUEEZE** as much air as possible out of the bag-out bag.

[14] **GATHER** the bag-out bag.

[15] **ROTATE** the drum <u>or</u> **COMPRESS** the bag-out bag (as applicable) in order to create a horsetail approximately 8 to 10 in. long.

[16] **TIGHTLY SECURE** the horsetail using one layer of filament and two layers of vinyl tape.

[17] **ENSURE** that the horsetail is located far enough away from the filtered bagout bag to avoid creasing, folding, or otherwise challenging the integrity of the filter.

[18] **FIRMLY ATTACH** two binding ties near the center of the horsetail, approximately 6 in. apart.

[19] **IF** bagging out the last item for the work day,
THEN FIRMLY ATTACH a second binding tie approximately 2 in. from the center of the horsetail on the WCG side of the horsetail.

NOTE *The excess part of the binding tie protruding through the binding tie latch tie is <u>not</u> to be cut off.*

[20] **COVER** the attached binding ties with vinyl tape.

9.1 WCG Item Bag-Out (continued)

Waste Handling Technician Three

[21] **POSITION** the horsetail cutters between the binding ties of the horsetail.

Waste Handling Technician One

[22] **GRASP** top of horsetail.

Waste Handling Technician Two

[23] **GRASP** bottom of horsetail.

WARNING

Extremities SHALL not be placed inside the jaws of the cutting tool in order to prevent personnel injury due to pinching.

Waste Handling Technician Three

[24] **CUT** the horsetail between the binding ties.

Waste Handling Technician One and Two

[25] **SIMULTANEOUSLY COVER** the cut stubs of the bag-out bag with vinyl tape.

[26] **ENSURE** that the cut-stubs have been covered with a final layer of vinyl tape, as directed by an RCT.

NOTE 1 *Used cheesecloth are to be disposed of as compactable waste or in an empty daughter as waste added in process to be bagged on the WCG*

NOTE 2 *The following step may be performed out of sequence.*

Waste Handling Technician Three

[27] **WIPE** down the cutters used to cut the horsetail, and **PLACE** the cutters in a holder, and **PLACE** the cutters in the designated staging area.

Waste Handling Technician

[28] **IF** the bag-out bag has a filter that is covered with tape,
THEN:

[A] **REMOVE** the tape from bag filter.

9.1 WCG Item Bag-Out (continued)

[B] **REQUEST** an RCT survey for radiological contamination.

[C] **IF** radiological contamination is detected,
THEN FOLLOW the instructions of the RCT.

9.2 WCG Introductory Port

This sub-section is a stand-alone sub-section and may be performed independently of or in conjunction with other sub-sections.

NOTE *This sub-section provides instructions for introducing items into the WCG.*

WARNING

Items are not to be removed from the WCG using the airlock since items placed in the airlock from the interior of the WCG are possibly radiologically contaminated.

Waste Handling Technician

[1] **ENSURE** that the prerequisite actions have been completed.

[2] **PREPARE** the area in accordance with RCT instructions.

[3] **WEAR** respiratory protection as required by the applicable RWP.

RCT

[4] **PERFORM** radiological surveys as necessary during the waste container handling evolutions.

Waste Handling Technician

[5] **IF** radiological contamination is detected,
THEN FOLLOW the instructions of the RCT.

WARNING

Both WCG airlock doors are to remain closed until they must be opened to introduce an item into the WCG in order to prevent releasing radiological contamination out of the WCG.

[6] **ENSURE** that both WCG Introductory Port doors are securely closed.

9.2 WCG Introductory Port (continued)

[7] **OPEN** the outer WCG Introductory Port door.

WARNING

Items are to be placed inside of the WCG airlock in a manner that does not disturb the WCG airlock surfaces in order to mitigate the spread of radiological contamination.

[8] **GENTLY PLACE** the item to be introduced into the WCG airlock.

[9] **CLOSE** the outer WCG Introductory Port door.

[10] **OPEN** the inner WCG Introductory Port door.

[11] **REMOVE** the item from the WCG Introductory Port and **PLACE** the item in the WCG.

[12] **CLOSE** the inner WCG Introductory Port door.

[13] **VERIFY** that both WCG Introductory Port doors are securely closed.

10. PERFORMANCE—WCG WASTE PROCESSING

This section is a stand-alone section and may be performed independently of or in conjunction with other Performance sections.

NOTE 1 *Radiological surveys may be performed as determined necessary [e.g., by an RP representative (e.g., RCT)] anytime during the performance of this procedure.*

NOTE 2 *The WCATS desktop application WCRR-REMED is performed in conjunction with this section.*

NOTE 3 *All manual drum movement will be performed in accordance with Appendix 7, Manual Drum Movements Special Instructions and EP-DIV-Policy-20057, EWMO Health and Safety Policy-Manual Movement.*

10.1 WCG Waste Processing Preparation

Waste Handling Technician

[1] **ENSURE** that the prerequisite actions have been completed.

[2] **ENSURE** that the battery charger for the cordless drill in the WCG has been unplugged.

[3] **ENSURE** that the parent drum has been bagged onto the WCG in accordance with Section 7.1, Parent Drum Bag On.

NOTE *The following step may be performed out of sequence.*

[4] **ENSURE** that the daughter drums have been bagged onto the WCG in accordance with Section 8.1, Bag On Daughter Drum, Bagport, or Gloveport, and **RECORD** the following information on Attachment 1:

- Daughter Drum Number
- Daughter Drum Filter Number
- Daughter Drum Bag Filter Number
- Daughter Drum Purchase Order Number

[5] **IF** VE activities are to occur,
THEN ENSURE that CCP-TP-113, Standard Contact Handled Waste Visual Examination, is performed concurrently with this procedure.

10.1 WCG Waste Processing Preparation (continued)

NOTE *If the drum lid ringbolt was pre-cut, then the drum lid ringbolt may require the use of an impact wrench or other hand tools to remove the drum lid ringbolt.*

[6] **SLOWLY REMOVE** the parent drum lid, being prepared to close the lid if there are unexpected conditions.

[7] **EXAMINE** the contents of the parent drum, and **DETERMINE** whether the contents of the drum have any unexpected items.

[8] **IF** any unexpected items are present in the parent drum,
THEN:

[A] **CLOSE** the parent drum.

[B] **NOTIFY** supervision and the WCRRF Operations Center of the discrepancy, and **REQUEST** the applicable actions.

[C] **DOCUMENT** the discrepancy and applicable actions in the Comments section of Attachment 1.

NOTE *Placing the parent drum lid over the waste items being surveyed is a simulation of the waste items being inside of a drum and provides a representation of the expected dose rate outside of the drum in order to determine whether the dose rate may exceed 190 mrem/hr and is the desired survey method.*

[9] **ENSURE** that a drum lid is placed over the waste items to be surveyed, as necessary, and **REQUEST** an RCT perform radiological surveys of the items being removed from the parent drum.

NOTE 1 *Unvented, Sealed waste packages are those waste packages that have a positive locking mechanism, such as a gasket with drum closure ring or a screw top lid (with no other openings) to seal the lid to the waste package.*

[10] **IF** the parent drum contains an unvented, sealed waste package,
THEN:

[A] **RECORD** the parent drum identification number on Attachment 3, WCRRF WCG Breaching (Opening) Unvented, Sealed Waste Packages.

10.1 WCG Waste Processing Preparation (continued)

NOTE *Multiple copies of Attachment 3 may be required for parent drums containing more than four unvented, sealed waste packages that are 5- to 30 gal. Only a single copy of Attachment 3 is necessary for parent drums with multiple unvented, sealed waste packages that are less than 5 gal.*

[B] **CHECK** (√) the applicable box on Attachment 3 to indicate the type of unvented, sealed waste package (e.g., Metal 5- to 30-gal, Non-metallic 5- to 30-gal, or < 5-gal).

[C] **($) ENSURE** that non-sparking tools are available for use in the WCG, and **CHECK** (√) YES or NO on Attachment 3. (SAC 5.10.1.6.1).

NOTE *Administrative Control Lock Log Sheet form 10.4 of EP-DIV-AP-0117* ***SHALL*** *be completed anytime the lock is placed or removed for WCG receptacles lockout.*

[D] **($) ENSURE** that the WCG electrical receptacles have been de-energized and locked open/off with an administrative lock, and **CHECK** (√) SAT or UNSAT on Attachment 3, and **MAKE** an entry on the Administrative Control Log Sheet to document that the WCG electrical receptacles are locked open/off. (SAC 5.10.1.6.2)

NOTE 1 *A proper ground requires that all ends of the grounding strap be firmly attached to a clean-bare metal surface.*

NOTE 2 *Attachment 4, WCRRF WCG Breaching (Opening) Metal 5- to 30-gal Unvented-Sealed Waste Packages Surveillance, is completed to document the operator and independent verifier installing the grounding devices within TA-50-69.*

NOTE 3 *The following step is to be performed by an operator and then independently verified by a second operator.*

NOTE 4 *Separate copies of Attachment 4 are required for each waste package.*

Waste Handling Technician

[E] **IF** the waste package is a METAL 5- to 30-gal waste package,
THEN:

[a] **RECORD** the parent drum identification number on Attachment 4.

10.1 WCG Waste Processing Preparation (continued)

[b] **($) ENSURE** that the parent drum has been properly grounded to the WCG using a grounding strap in the WCG, and **CHECK** (√) SAT or UNSAT on Attachment 4 to document that the grounding strap was attached. (SR 4.6.1)

Independent Verifier

[c] **VERIFY** that the parent drum has been properly grounded to the WCG using a grounding strap in the WCG, and **CHECK** (√) SAT or UNSAT on Attachment 4.

Waste Handling Technician

[11] **IF** processing a parent drum containing an unvented, sealed 5- to 30-gal waste package, **THEN:**

WARNING

Unvented, sealed waste packages may contain a concentration of hydrogen gas and are to be handled or identified in this document using grounding devices and lid restraints in order to minimize any possible adverse effects from potentially releasing hydrogen.

NOTE *Drum lid restraints that are not in use are to be stored in such a matter that the drum lid restraints are protected from degradation (e.g., in a daughter drum).*

[A] **($) VISUALLY** inspect the waste package lid restraint for the following, and **DOCUMENT** the results of the inspection on Attachment 3:

- Degradation (e.g., no indication of cracked parts, missing fasteners, loose or frayed parts, excessive wear, or unusual deformation) (SAC 5.10.1.5.1)
- Missing or illegible identification
- Melting or charring
- Broken or worn stitching in load bearing splices
- Knots in any part of the drum lid restraint
- Discoloration and brittle or stiff areas

[B] **IF** the visual inspection of a drum lid restraint is unsatisfactory, **THEN:**

[a] **SEGREGATE** the unsatisfactory drum lid restraint from the other restraints, and **IDENTIFY** the restraint as unusable.

10.1 WCG Waste Processing Preparation (continued)

[c] **GO** to Step 10.1[11][A].

[C] **($) ATTACH** the waste package lid restraint to the waste package and verify proper installation, and **CHECK** SAT, UNSAT, or N/A that the lid restraint has been attached on Attachment 3. (SAC 5.10.1.5.1)

NOTE *A proper ground requires that all ends of the grounding strap be firmly attached to a clean-bare metal surface.*

[D] **($) IF** the waste package is a METAL 5- to 30-gal waste package,
THEN:

[a] **GROUND** the metal waste package using a grounding strap in the WCG, and **CHECK** (√) SAT or UNSAT on Attachment 4 to document that the grounding strap was attached. (LCO 3.6 and SR 4.6.1)

Independent Verifier

[b] **VERIFY** that the grounding strap is attached and **CHECK** (√) SAT or UNSAT on Attachment 4.

[c] **RECORD** the following information, Name, Signature, Z Number and Date on Attachment 4.

Waste Handling Technician

[d] **($) IF** the grounding strap was attached to the waste package or parent drum, **AND** the grounding strap becomes detached from either the waste package or the parent drum during the opening of the waste package,
THEN ENTER the Actions of LCO 3.6, and **NOTIFY** the WCRRF Operations Center. (LCO 3.6)

[E] **IF** the waste package lid **CANNOT** be removed and the waste package is to be vented by drilling a hole into the waste container,
THEN:

[a] **NOTIFY** supervision of need to vent container using a drill.

[b] **OBTAIN** a non-sparking (brushless) battery powered hand drill with an approximate 1/4 in. bit installed.

10.1 WCG Waste Processing Preparation (continued)

WARNING

Shavings from the drilling process may be hot and could potentially initiate a fire involving the items inside of the WCG.

[c] **ENSURE** the drill speed is set to slow speed and **DOCUMENT** on Attachment 4.

[d] **IF** sparking is observed during the drilling of the waste container, **THEN:**

1. **STOP** drilling operations.
2. **NOTIFY** the WCRRF Operations Center and SOS for guidance and direction.

[e] **DRILL** a hole through the container in a location provided by supervision.

WARNING

The WCG electrical receptacles are not to be re-energized until 30 min. has elapsed since the unvented waste package was opened in order to prevent the possibility of a flammable gas mixture deflagration.

NOTE *Glovebox operations may continue after opening a less than 5 gal-unvented sealed waste package while waiting the required 30 min. before re-energizing the WCG electrical receptacles.*

[f] **DOCUMENT** time when container was vented on Attachment 3.

[g] **ENSURE** that all WCG operations have been suspended.

[h] **($) WHEN** 30 min. has elapsed,
THEN DOCUMENT the time and that greater than or equal to 30 min. has elapsed since the waste package was vented on Attachment 3. (SAC 5.10.1.5.2 and SAC 5.10.1.6.3)

10.1 WCG Waste Processing Preparation (continued)

[i] **CHECK** (√) SAT, UNSAT or N/A when the time is ≥ 30 min. on Attachment 3.

[j] **RESUME** operations as directed by supervision.

[k] **GO** to Step 10.1[14].

[F] **IF** the waste package lid **CANNOT** be removed and the waste package is to be vented using a non-sparking tools (e.g., punch and hammer),
THEN:

[a] **NOTIFY** supervision of need to vent the waste container.

[b] **VENT** container by piercing a hole in container using a non-sparking tools (e.g., punch and hammer).

[c] **DOCUMENT** time when waste container was vented on Attachment 3.

[d] **ENSURE** that all WCG operations have been suspended.

[e] **($) WHEN** 30 min. has elapsed,
THEN DOCUMENT the time and that greater than or equal to 30 min. has elapsed since the waste package was vented on Attachment 3. (SAC 5.10.1.5.2 and SAC 5.10.1.6.3)

[f] **CHECK** (√) SAT, UNSAT, or N/A when the time is ≥ 30 min. on Attachment 3.

[g] **RESUME** operations as directed by supervision.

[h] **GO** to Step 10.1[14].

10.1 WCG Waste Processing Preparation (continued)

[12] **IF** processing a parent drum containing an unvented, sealed waste packages of less than 5 gal,
THEN:

[A] **IF** the waste package lid **CANNOT** be removed and the waste package is to be vented by drilling a hole into the waste container,
THEN:

[a] **NOTIFY** supervision of sealed container needed to be drilled.

[b] **OBTAIN** a non-sparking (brushless) battery powered hand drill with an approximate 1/4 in. bit installed.

WARNING

Shavings from the drilling process may be hot and could potentially initiate a fire involving the items inside of the WCG.

[c] **ENSURE** the drill speed is set to slow speed and **DOCUMENT** on Attachment 4.

[d] **IF** sparking is observed at anytime during the drilling of the waste container,
THEN:

1. **STOP** drilling operations.

2. **NOTIFY** the WCRRF Operations Center and SOS for guidance and direction.

[e] **DRILL** a hole through the container in a location provided by supervision.

10.1 WCG Waste Processing Preparation (continued)

WARNING

The WCG electrical receptacles are not to be re-energized until 30 min. has elapsed since the unvented waste package was opened in order to prevent the possibility of a flammable gas mixture deflagration.

NOTE *Glovebox operations may continue after opening a less than 5 gal-unvented sealed waste package while waiting the required 30 min. before re-energizing the WCG electrical receptacles.*

[f] **DOCUMENT** time when waste container was vented on Attachment 3.

[g] **ENSURE** that all WCG operations have been suspended

[h] **($) WHEN** 30 min. has elapsed,
THEN DOCUMENT the time and that greater than or equal to 30 min. has elapsed since the waste package was vented on Attachment 3.
(SAC 5.10.1.5.2 and SAC 5.10.1.6.3)

[i] **CHECK** (√) SAT, UNSAT, or N/A when time is ≥ 30 min. on Attachment 3.

[j] **RESUME** operations as directed by supervision.

[k] **ENSURE** container possesses no free liquids.

[l] **GO** to Step 10.1[17].

[13] **OPEN** the waste package and **REMOVE** the waste package lid.

[14] **REMOVE** the lid restraint and **ENSURE** that the lid restraint and waste package lid, as applicable, are placed out of the way of the vented waste package.

[15] **($) RECORD** the time that the lid restraint and waste package lid were removed from the waste package on Attachment 3. (SAC 5.10.1.5.2 and SAC 5.10.1.6.3)

[16] **REMOVE** the grounding straps from the metal waste package, as applicable.

10.1 WCG Waste Processing Preparation (continued)

[17] **REMOVE** the grounding straps from the parent drum.

[18] **($) IF** directed by supervision,
THEN REMOVE the administrative lock from the WCG electrical receptacles, and **DOCUMENT** that 30 minutes has elapsed before re-energizing the WCG electrical receptacles. (SAC 5.10.1.6.3)

[19] **IF** sparking is observed at anytime during the processing of waste material,
THEN:

[A] **PLACE** a fire barrier (e.g., MET-L-X or fire blanket) over the suspect waste material.

[B] **STOP** waste processing.

[C] **ENSURE** that a Fire Watch has been stationed at the WCG to continuously monitor the waste in the WCG, and **CHECK** (√) YES or NO on Attachment 1.

NOTE *The following personnel are notified by the WCRRF Operations Center:*

- *OM or designee*
- *Solid Waste Regulatory Compliance Group*
- *Industrial Hygienist*
- *Cognizant System Engineer*
- *Radiation Protection*

[D] **NOTIFY** the WCRRF Operations Center/Shift Operations Manager of the discrepancy, and **DOCUMENT** the notification and discrepancy in the Comments section of Attachment 1:

[E] **IF** the suspect item is to be bagged out of the WCG,
THEN BAG OUT the suspect item in accordance with Section 9.1, WCG Item Bag-Out.

[F] **PLACE** the suspect item in an empty daughter drum.

[G] **IF** the daughter drum is attached to the WCG,
THEN BAG OFF the daughter drum in accordance with Section 8.2, Bag Off Daughter Drum.

[H] **CLOSE** the daughter drum in accordance with EP-WCRR-WO-DOP-0221.

10.1 WCG Waste Processing Preparation (continued)

[20] **IF** a shielded container (e.g., lead lined) is in the parent drum,
THEN:

WARNING

Personnel are to avoid the high radiation exposure area in front of a shielded container that has been accessed in order to prevent increased exposure to radiation due to radiation streaming from the open portion of the shielded container.

[A] **ENSURE** that personnel in Building TA-50-69 are notified that a shielded container is to be accessed and that they are positioned such that when the shielded container is accessed the radiation streaming from the shielded container is directed away from personnel.

[B] **ACCESS** the shielded container contents without removing the contents, and **REQUEST** an RCT to perform a radiological survey to determine the radiation levels.

[C] **IF** the radiation level exceeds an RWP limit,
THEN:

[a] **ENSURE** that the shielding has been replaced, and **CLOSE** the shielded container.

[b] **REQUEST** an RCT perform a radiological survey on the closed shielded container to determine the radiation levels.

[c] **IF** the closed, shielded container radiation level exceeds the RWP limits,
THEN:

1. **ENSURE** that all waste material is in a safe configuration.

2. **STOP** the work activity.

3. **COMPLY** with the RCT's instructions to minimize radiological exposure.

4. **NOTIFY** the WCRRF Operations Center of the condition, and **REQUEST** the applicable actions.

10.1 WCG Waste Processing Preparation (continued)

NOTE *Waste placed into daughter drums must be from a single parent drum except for the collection drum (pressurized container or aerosol can).*

[d] **IF** the waste material is **NOT** to be processed at this time as directed by supervision,
THEN:

1. **PLACE** the waste items from the parent drum into a daughter drum.
2. **BAG OFF** the parent and daughter drums in accordance with the applicable section of this procedure.
3. **IF** a Fire Watch was stationed,
THEN ENSURE that all INVENTORY is in a safe configuration, and **SECURE** the Fire Watch, and **CHECK** (√) YES or NO on Attachment 1.
4. **NOTIFY** the WCRRF Operations Center of the waste disposition.

NOTE 1 *Continued operation may require the work activity to be paused in order to allow operators and supervision to evaluate the condition to determine the necessary response to the situation (e.g., re-enter area under a different RWP or prepare a POC to accept the waste material).*

NOTE 2 ***($)*** *A STATIONARY FIRE WATCH is required in the OPERATION and WARM STANDBY MODE when the WCG INVENTORY is greater than 300 PE-Ci equivalent combustible waste. (AC 5.2.3)*

[D] **WHEN** the appropriate actions have been determined,
THEN GO to Step 10.1[15].

10.1 WCG Waste Processing Preparation (continued)

[22] **IF** any of the following items are identified during the processing of waste:

- Lead-elemental (e.g., circuit boards)
- Mercury-elemental (e.g., thermometers or switches)
- Batteries (e.g., lead/acid, nickel cadmium, or lithium)
- Light bulbs (i.e., incandescent or fluorescent)
- PCB items (e.g., ballasts, capacitors, or transformers)
- Liquids (any amount not remediated or absorbed)

THEN RECORD the item descriptive information (item type, size, trade name, if available) in the Comments section of Attachment 1.

NOTE 1 *The WMC can assist with assigning the appropriate RCRA Hazardous Waste Codes to the daughter drum.*

NOTE 2 *The following step may be performed when operationally convenient but must be completed the same day as the identification of the item.*

[C] **ENSURE** that the appropriate RCRA Hazardous Waste Codes is assigned to the drum that receives the item (e.g., daughter drum or collection drum) and **CONFIRM** with the WCRRF Inventory control person.

WARNING

Glass sample vials may contain residual granular plutonium hydride which can generate sparks when subjected to mechanical agitation. To reduce the possibility of breaking a glass sample vial and the generation of sparks glass sample vials SHALL be without excessive force. (EP-DIV-REPORT-09)

NOTE *Multiple sections may be performed and repeated in order to completely disposition all of the waste from a parent drum.*

[23] **PERFORM** the following applicable sub-section:

- Section 10.2, Waste Material Greater Than 190 mrem/hr
- Section 10.3, Prohibited Item Disposition
- Section 10.4, Waste Splitting Activities
- Section 10.5, Repackaging Activities
- Section 10.6, Processing Nitrate Salt Drums

10.2 Waste Material Greater Than 190 mrem/hr

The following sub-section provides instructions for the disposition of waste material with an expected radiation dose rate of greater than 190 mrem/hr on contact with the outside of a waste container. Simulating that the waste material is inside of a daughter waste container (e.g., measured through drum lid) is the desired method of determining the expected radiation dose rate of waste material outside of a waste container.

NOTE 1 *Appendix 5, Flowchart for Processing of High Dose Items of Mixed Material Types, illustrates the process for POC operations.*

NOTE 2 *Waste containers with Nitrate Salt and a radiation dose rate of greater than 190 mrem/hr are to be processed in accordance with Section 10.6, Processing Nitrate Salt Drums, before performing this section. An attempt to reduce the radiation dose rate to less than or equal to 190 mrem/hr by absorbing the Nitrate Salt with absorbent should be attempted first. Nitrate Salt absorption reduces the quantity of POCs required to process the waste material.*

Waste Handling Technician

[1] **ENSURE** that a POC assembly has been prepared and is available.

[2] **DETERMINE** whether the serial numbers on the pipe component lid and the pipe component are the same.

[3] **IF** the serial numbers do **NOT** match,
THEN:

[A] **IDENTIFY** (e.g., tag or mark) the POC indicating that the POC is defective.

[B] **SEGREGATE** the POC in order to prevent the item from being used.

NOTE *The NCR may be initiated at a time that is operationally convenient.*

[C] **ENSURE** that an NCR is initiated in accordance with P330-6, Nonconformance Reporting, as required.

[D] **NOTIFY** the WCRRF Operations Center of the discrepancy.

[E] **GO** to Step 10.2[1].

10.2 Waste Material Greater Than 190 mrem/hr (continued)

[4] **IF** the POC is to be bagged onto the WCG,
THEN RECORD the following POC bag-on bag information on Attachment 1:

- Manufacturer
- Model Number
- Serial Number
- Date of Manufacture

[5] **PLACE** the POC assembly and shielding near the vicinity of the WCG to provide shielding during bag-off operations or bag-on the POC to the WCG in accordance with Section 8.1, Bag On Daughter Drum, Bagport, or Gloveport; and **RECORD** the POC drum number and POC unique identification number on Attachment 1.

[6] **IDENTIFY** items to be placed into a POC assembly, and **ENSURE** that an item description is recorded on Attachment 1.

[7] **IF** the item is to be bagged off of the WCG and the item is from a waste container with a mixed material type,
THEN:

[A] **REMOVE** any lead shielding from outside of the item, and **PLACE** the lead in a daughter drum.

[B] **ENSURE** that a description of the item is recorded on Attachment 1.

[C] **BAG OFF** the item in accordance with Section 9.1, WCG Item Bag Out.

[D] **IF** there is no lead shielding inside of the item (container),
THEN PLACE the bagged out item inside a shielded (pewter) container or cover with a lead blanket.

[E] **GO** to Step 10.2[9].

NOTE *Shielded container is only used for the purpose of ALARA and not for final waste packaging.*

[8] **IF** an individual item is to be bagged out of the WCG,
THEN:

10.2 Waste Material Greater Than 190 mrem/hr (continued)

[A] **BAG OUT** individual items in accordance with Section 9.1, WCG Item Bag Out.

[B] **PLACE** the bagged out items in shielded (pewter) container or cover with a lead blanket, as required.

NOTE 1 *A POC assembly drum is full when it has reached its weight limit of 547 lb, or is physically full.*

NOTE 2 *Waste placed into daughter drums or Pipe Overpack Containers (POCs) must be from a single parent drum.*

[9] **WHEN** the item is to be placed into a POC,
THEN ENSURE that the item has been removed from the shielded (pewter) container or lead blanket, as necessary.

[10] **PLACE** the items into the POC.

[11] **IF** the POC assembly is **NOT** full,
AND the parent drum is still being processed,
AND the POC assembly is **NOT** bagged onto the WCG,
THEN:

[A] **ALIGN** the lid holes with the holes in the pipe component body.

[B] **HAND-THREAD** the lid bolts as far as possible.

[C] **REPLACE** the fiberboard packaging, being careful to match the pipe bolt heads, hoist ring, and filter with cutouts in fiberboard.

[D] **REPLACE** the spacers, liner lid, and drum lid.

[E] **IF** there are additional 190 mrem/hr items to be bagged out of the WCG,
THEN GO to Step 10.2[7].

[12] **IF** the POC is bagged onto the WCG,
THEN bag-off the POC in accordance with Section 8.2, Bag Off Daughter Drum

10.2 Waste Material Greater Than 190 mrem/hr (continued)

[13] **CLOSE** the POC assembly in accordance with the manufacturer's instructions and **DOCUMENT** (initials and Z number) that the POC assembly has been closed in accordance with the manufacturer's instructions on Attachment 1.

[14] **WEIGH** the POC assembly, and **RECORD** the POC Assembly Gross Weight on Attachment 1.

[15] **REQUEST** an RCT perform a radiation survey of the POC, and **RECORD** the POC radiation survey results on Attachment 1.

[16] **IF** the following requirements are **NOT** satisfied:

- External surface radiation dose rates less than 200 mrem/hr (DOE/WIPP-02-3122)
- Gross weight less than 547 lb for a 12 in. POC (CH-TRAMPAC)

THEN NOTIFY the WCRRF Operations Center of the discrepancy, and **REQUEST** the applicable actions.

[17] **LABEL** the POC assembly drum in accordance with EP-DIV-DOP-20043.

[18] **IF** all of the waste in the parent drum has **NOT** been dispositioned,
THEN GO to the appropriate sub-section to complete processing the remaining waste.

[19] **GO** to Section 11.1, Disposition.

10.3 Prohibited Item Disposition

The following sub-section provides instructions for the disposition of waste material that is considered to be prohibited items at WIPP.

NOTE 1 *The following activities associated with sorting parent drum waste such as the disposition of liquids, pressurized containers, and PCB-contaminated waste may be performed simultaneously or in any order.*

NOTE 2 *The Hold Tag for CCP NCRs is removed from the parent drum and returned to CCP personnel.*

NOTE 3 *A completed PID package includes the following documents:*

- *Attachment 1, WCRRF WCG Waste Processing Data Sheet*
- *Attachment 5, WCRRF Prohibited Item Collection Drum Data Sheet*
- *EP-WCRR-WO-DOP-0221 Attachment 1, Checklist for the Preparation of a New 55-Gallon Drum Assembly*
- *EP-WCRR-WO-DOP-0221 Attachment 2, Checklist for the Closing of a 55-Gallon Drum Assembly*
- *WDP Waste Remediation Safety Evaluation Data Sheet (EP-DIV-AP-20098 Attachment 1)*

Waste Handling Technician

[1] **LOCATE** any contained, uncontained, or free liquids.

NOTE 1 *Waste containers with liquids (any amount or configuration) that have not been solidified (absorbed) must be managed on secondary containment pallets and have a FREE LIQUID label affixed.*

NOTE 2 *By absorbing all liquids the resulting daughter drum is not required to be stored on a secondary containment pallet.*

[2] **IF** liquid is identified inside of transparent or opaque containers that is less than or equal to 60 ml in the containers,
AND the liquid is **NOT** to be absorbed,
THEN PLACE the containers with liquids into the daughter drum.

[3] **IF** liquid is identified inside of a transparent or opaque containers (e.g., contents adequately labeled),
THEN:

[A] **RECORD** the approximate liquid volume on Attachment 1.

10.3 Prohibited Item Disposition (continued)

[B] **OPEN** the containers.

[C] **PERFORM** a pH test of the liquid using Litmus Paper.
- Acid (less than 7)
- Caustic (base – greater than 7)

[E] **NEUTRALIZE** the liquid, as necessary.

[F] **OBTAIN** the appropriate absorbing agent, and **PLACE** the absorbent into a compatible container (e.g., bottle or bag) that has a volume of less than 4 Liters.

NOTE *Multiple containers of less than 4 liters may be required in order to absorb all of the free liquid.*

[G] **TRANSFER** the liquid into the compatible container (e.g., bottle or bag), and **PLACE** the container (e.g., bottle or bag) inside of the daughter drum.

NOTE *Waste containers with liquids (any amount or configuration) that have not been solidified (absorbed) must be managed on secondary containment pallets and have a FREE LIQUID label affixed.*

[4] **IF** liquid is identified in transparent containers or in opaque containers that **CANNOT** be safely opened (e.g., contents adequately labeled),
THEN:

[A] **PLACE** the containers into the daughter drum.

[B] **NOTIFY** the WCRRF Operations Center of the discrepancy, and **DOCUMENT** in the Comments section of Attachment 1.

NOTE *Liquids are not to be combined or bulked.*

[5] **IF** any free liquid is identified,
THEN:

[A] **DETERMINE** the approximate volume of liquid, and **DOCUMENT** the approximate amount of liquid on Attachment 1.

[B] **PERFORM** a pH test on the liquid using Litmus Paper.

10.3 Prohibited Item Disposition (continued)

[C] **NEUTRALIZE** the liquid, as necessary.

[D] **OBTAIN** the appropriate absorbing agent, and **PLACE** the absorbent in a compatible container (e.g., bottle or bag) that has a volume of less than 4 Liters.

[E] **ADD** a small amount of the free liquid to the container (e.g., bottle or bag).

[F] **IF** any reaction occurs between the absorbent and the free liquid,
THEN:

[a] **STOP** the addition work activities.

[b] **NOTIFY** the WCRRF Operations Center of the condition, and **REQUEST** the applicable actions.

[c] **DOCUMENT** the notifications and actions in the Comments section of Attachment 1.

NOTE *Multiple containers (e.g., bottle or bag) of less than 4 liters may be required in order to absorb all of the free liquid.*

[G] **IF** processing Nitrate Salts with free liquids,
THEN GO to Sub-section 10.6, Processing Nitrate Salt Drums.

[H] **MIX** the absorbent with the waste.

[I] **ENSURE** absorbent is thoroughly mixed with the liquid.

NOTE *Absorbing waste containers that are categorized as Nitrate Salts will generate additional daughter drums due to the amount of absorbent required to solidify the waste.*

[J] **PLACE** the containers (e.g., bottle or bag) inside of the daughter drum.

[K] **REPEAT** Step 10.3[5] until all liquids have been absorbed.

10.3 Prohibited Item Disposition (continued)

NOTE *Appendix3, Volumes of Cylindrical Inner Containers Near 4 Liters, can be used to help determine whether a container is greater than 4 liters.*

[6] **LOCATE** sealed, unpressurized containers greater than 4 liters (that do not contain any liquid), and **DISPOSITION** the container as follows:

[A] **REMOVE** the tape, lid, cap, stopper, or other appropriate method.

[B] **PLACE** the dispositioned items into the daughter drum.

[7] **LOCATE** opaque or non-penetrable item (that do not contain any liquid), and **DISPOSITION** the container as follows:

[A] **DESCRIBE** in detail (e.g., size, shape, labeling, weight, material) the opaque or non-penetrable items on Attachment 1.

[B] **PLACE** the dispositioned items into the daughter drum.

[8] **LOCATE** potentially pressurized containers, and **DISPOSITION** the container as follows:

[A] **IF** there is evidence that a potentially pressurized container has been previously punctured and is empty,
THEN:

[a] **PLACE** a metal rod or equivalent (item found in the waste) inside the container and **SECURE** with tape, or **ENLARGE** the hole to be visible by Radiography.

[b] **PLACE** the container inside the daughter drum.

[B] **IF** a potentially pressurized container is **NOT** punctured, and does **NOT** possess a mechanical means to depressurize the container,
OR the pressurized container is greater than or equal to 5 gal,
THEN:

[a] **DECONTAMINATE** (wipe down) the potentially pressurized container.

[b] **BAG OUT** the potentially pressurized container in accordance with Section 9.1, WCG Item Bag Out.

IPC-1

10.3 Prohibited Item Disposition (continued)

NOTE *Item Identification labels are generated as part of performing the WCATS desktop remediation application.*

[c] **PLACE** an Item Identification (ID) label on the potentially pressurized container or bagout bag.

NOTE 1 *A collection drum for pressurized containers and aerosol cans will be established and placed inside one of the WCRRF Transportainers (TSDF).*

NOTE 2 *Pressurized cylinders and aerosol cans must be collected in separate drums (e.g., on collection drum for pressurized cylinders and one collection drum for aerosol cans. All other prohibited items that cannot be remediated must be collected in a separate (third) collection drum.*

[d] **PLACE** the potential pressurized container in a designated collection drum.

[e] **ENSURE** that the following information is recorded on Attachment 5 for each item:

- Collection drum number
- Collection drum type (pressurized container, aerosol, or other)
- Date collection drum waste created
- Date item is added to the collection drum
- Item Identification Label Number
- Parent Container Number
- Parent Accumulation Start Date
- Parent EPA Codes
- Item Description
- Item Shape
- Item Size
- Item Labeling
- Item Weight (lb)
- Initials and Z number

NOTE *The hazardous waste label may need to be replaced in order to ensure that all information is added and legible.*

[f] **ENSURE** that the accumulation start date on the collection drum reflects the earliest parent drum accumulation start date recorded on Attachment 5.

10.3 Prohibited Item Disposition (continued)

[g] **ENSURE** that all EPA Codes from the associated parent drums are documented on the collection drum hazardous waste label.

ICP-1

[C[**IF** a potential pressurized container is **NOT** punctured, and possesses a mechanical means to depressurize the container,
AND the pressurized container has a volume of less than 5 gal,
THEN NOTIFY the WCRRF Operations Center and the SOM for guidance and direction for dispositioning the container.

[9] **IF** any polychlorinated biphenyls (PCB)-contaminated waste is identified,
THEN:

[A] **DESCRIBE** in detail (e.g., size, shape, labeling, weight, material) the PCB-contaminated waste on Attachment 1.

NOTE *The following step may be performed when operationally convenient.*

[B] **ATTACH** a PCB Item ID Number to the drum receiving the PCB waste (above the top rolling hoop and cover with clear tape), and **RECORD** the PCB Item ID Number on Attachment 1.

[C] **PLACE** the PCB-contaminated waste into a daughter drum.

[10] **DOCUMENT** a description of the type of remaining waste added to each daughter drum during the processing of waste from a parent drum on Attachment 1.

[11] **REPEAT** Steps 10.3[2] though 10.3[10] as necessary to completely resolve any PIDs within the parent drum.

[12] **IF** all of the waste in the parent drum has **NOT** been dispositioned,
THEN GO to the appropriate sub-section to complete processing the remaining waste.

NOTE *The following step may be performed out of sequence.*

[13] **DETERMINE** the level of waste placed into the daughter drum, and **RECORD** the Daughter Drum % Full value (%) on Attachment 1.

[14] **BAG OFF** waste containers in accordance with Section 7.2, Parent Drum Bag Off; and Section 8.2, Bag Off Daughter Drum.

[15] **GO** to Section 11.1, Disposition.

10.4 Waste Splitting Activities

The following steps provide instructions for the disposition of waste material with a PE-Ci value that requires the waste material to be divided into multiple daughter drums.

This sub-section is performed following the assaying of the parent drum and the determination of the number of daughter drums to be generated from the parent drum.

Waste Handling Technician

[1] **CAREFULLY REMOVE** a portion of the parent drum's contents (waste items).

[2] **NOTIFY** the Assay Personnel of the estimated weight of the items, as requested.

[3] **PLACE** the waste items into the WCG metal bucket.

[4] **LOWER** the metal bucket into the applicable daughter drum.

NOTE *Radiological assay data may be provided at the time of segregation or from waste container documentation provided with the container.*

[5] **ENSURE** a radiological assay of the material in the applicable daughter drum is performed as necessary.

Waste Handling Technician

[6] **IF** the assay is higher than desired,
THEN:

[A] **LIFT** the metal bucket out of the applicable daughter drum.

[B] **REMOVE** some of the metal bucket contents.

[C] **GO** to Step 10.4[4].

[7] **LIFT** the metal bucket out of the applicable daughter drum and segregate the waste in the WCG per radiological assay data.

NOTE *Waste placed into daughter drums or Pipe Overpack Containers (POCs) must be from a single parent drum.*

[8] **PLACE** the segregated waste from the WCG into the applicable daughter drum.

10.4 Waste Splitting Activities (continued)

[9] **REPEAT** Steps 10.4[1] through 10.4[8] until the desired radiological assay value is reached in the applicable daughter drum (farthest from airlock).

NOTE *The following step may be performed out of sequence.*

[10] **DETERMINE** the level of waste placed into the daughter drums, and **RECORD** the Daughter Drum % Full value (%) on Attachment 1.

[11] **BAG OFF** the applicable daughter drum in accordance with Section 8.2, Bag Off Daughter Drum.

NOTE *Steps 10.4[12] and 10.4[13] may be performed in any order or concurrently.*

[12] **BAG ON** a new daughter drum replacement in accordance with Section 8.1, Bag On Daughter Drum, Bagport, or Gloveport.

[13] **REPEAT** Steps 10.4[1] through 10.4[12] until all material within the parent drum has been processed.

[14] **WHEN** assaying of waste at the WCG is complete,
THEN ENSURE that the assaying equipment is removed from the WCG Exclusion Zone.

[15] **IF** all of the waste in the parent drum has **NOT** been dispositioned,
THEN GO to the appropriate sub-section to complete processing the remaining waste.

[16] **GO** to Section 11.1, Disposition.

10.5 Repackaging Activities

Waste Operator

[1] **REMOVE** waste items from the parent drum.

NOTE *Waste placed into daughter drums or Pipe Overpack Containers (POCs) must be from a single parent drum.*

[2] **PLACE** the waste items into a daughter drum.

[3] **DOCUMENT** any waste added during the processing of waste from a parent drum on Attachment 1.

NOTE *The following step may be performed out of sequence.*

[4] **DETERMINE** the level of waste placed into the daughter drums, and **RECORD** the Daughter Drum % Full value (%) on Attachment 1.

[5] **BAG OFF** the parent and daughter drums from the WCG in accordance with Section 7.2, Parent Drum Bag Off; and Section 8.2, Bag Off Daughter Drum.

[6] **IF** all the waste in the parent drum has **NOT** been dispositioned,
THEN GO to the appropriate sub-section in this procedure to complete processing of the remaining waste.

[7] **GO** to Section 11.1, Disposition.

10.6 Processing Nitrate Salt Drums

The following sub-section provides instructions for the disposition of Nitrate Salt drums that require the waste material to be mixed with absorbent material. Unless otherwise directed by supervision the minimum ratio of absorbent to Nitrate Salt is 3-parts absorbent to 1-part Nitrate Salt.

[1] **REMOVE** the waste items from the parent drum.

[2] **DOCUMENT** any waste items from the parent drum added to the daughter drum during the waste processing on Attachment 1.

[3] **ENSURE** that an organic absorbent (Kitty Litter/Zeolite® absorbent) is added to the waste material at a minimum ratio of 3-parts absorbent to 1-part waste or at a ratio as directed by supervision.

[4] **ENSURE** absorbent (Kitty Litter/Zeolite® absorbent) is thoroughly mixed with the Nitrate Salt material.

[5] **IF** the measured radiation level of the absorbent/Nitrate Salt mixture is greater than 190 mrem/hr,
AND multiple attempts to reduce the radiation level by splitting the absorbent/Nitrate Salt mixture have been attempted or directed by supervision,
THEN GO to Section 10.2, Waste Material Greater Than 190 mrem/hr.

[6] **IF** the measured radiation level of the absorbent/Nitrate Salt mixture is greater than 190 mrem/hr,
THEN:

[A] **SPLIT** the absorbent/Nitrate Salt mixture.

[B] **REPEAT** Steps 10.6[3] through 10.6[5] for each portion of the absorbent/Nitrate Salt mixture.

[7] **PLACE** process waste into daughter drum.

[8] **REPEAT** Steps 10.6[1] through 10.6[7] for all Nitrate Salt processing.

[9] **REMEDIATE** the contents of the parent drum for other items as applicable.

10.6 Processing Nitrate Salt Drums (continued)

NOTE *Absorbent waste containers that are categorized, as Nitrate Salts will generate additional daughter drums due to the amount of absorbent required to solidify the waste.*

[10] **DETERMINE** the level of waste placed into the daughter drums, and **RECORD** the Daughter Drum % Full value (%) on Attachment 1.

[11] **BAG OFF** the parent and daughter drums from the WCG in accordance with Section 7.2, Parent Drum Bag Off; and Section 8.2, Bag Off Daughter Drum.

[12] **CLOSE** the daughter drum in accordance with EP-WCRR-WO-DOP-0221, Preparing and Closing 55-Gallon Daughter Drum Assemblies.

11. POST-PERFORMANCE ACTIVITY

11.1 Disposition

Waste Handling Technician

[1] **SIGN** and **DATE** the applicable attachments.

Cognizant System Engineer

[2] **IF** UNSAT was checked on Attachment 4,
THEN:

[A] **PERFORM** an Immediate Operability Determination (IOD) in conjunction with the SOM in accordance with AP-341-516, Operability Determination and Functionality Assessment.

[B] **IF** the IOD is that the Structure, System, and Component (SSC) is operable, **AND** information is available that could change the outcome of the IOD, **THEN PERFORM** an Prompt Operability Determination for the deficiency in accordance with AP-341-516.

[C] **NOTIFY** the applicable Operations Center and SOM of the operability determination, as applicable.

[D] **PRINT, SIGN, Z number** and **DATE** Attachment 4.

SOS or designee

[3] **IF** a Fire Watch was stationed,
THEN ENSURE all INVENTORY is in a safe configuration, and **SECURE** the Fire Watch, and **CHECK** (√) YES or NO on Attachment 1.

[4] **IF** Section 10 was performed,
THEN ENSURE that the WCATS desktop application WCRR-REMED has been completed and the all-in-one labels generated and applied in accordance with EP-DIV-DOP-20043.

[5] **REVIEW** the applicable attachments for accuracy and completeness.

[6] **IF** any discrepancies are identified,
THEN RESOLVE the discrepancies with the original surveillant to correct the documentation.

11.1 Disposition (continued)

[7] **IF** Attachment 4 was completed,
THEN:

[A] **CHECK** (√) YES or NO to indicate whether the applicable acceptance criteria is satisfied on Attachment 4.

[B] **IF** the applicable acceptance criteria is **NOT** satisfied,
THEN:

[a] **ENSURE** that the applicable TSR actions have been implemented.

[b] **ENSURE** that the actions of EP-DIV-AP-13, EWMO TSR-Related Operational Limits Actions Compliance Tracking, have been implemented.

[c] **ENSURE** that the WCRRF Operations Center, SOM and EWMO Facility Operations Director (FOD) have been notified of the discrepancy.

[8] **PRINT, SIGN,** and **RECORD** Z#, Date/Time on the applicable attachments.

[9] **FORWARD** the applicable attachments to the WCRRF Operations Center.

[10] **ENSURE** that the Administrative Control Lock Log Sheet form, lock and key are returned to WCRRF Operation Center.

[11] **IF** a prohibited item collection drum was brought into TA-50-69,
AND waste processing is complete,
THEN ENSURE that the prohibited item collection drum is moved out of TA-50-69.

NOTE *Completing a Post-Job Review may be accomplished using the applicable P300 form or online (the preferred method since the institution has access to feedback and lessons learned http://int.lanl.gov/safety/iwmc/ [Click on the Submit IWD Part 4, Post-Job Review]).*

[12] **IF** any of the following occur:
- A new activity was completed for the first time
- A request was made by anyone involved with the performance of this procedure to perform a post-job review
- An abnormal event occurred
- A revision to an existing procedure was issued and it has been determined by the procedure owner or designee that a Post-Job Review is required

THEN PERFORM a Post-Job Review in accordance with P300.

11.1 Disposition (continued)

[13] **IF** the Post-Job Review identified any necessary changes to this procedure, **THEN INITIATE** a revision to this procedure.

11.2 Records Processing

Waste Handling Technician or Supervision

[1] Disposition records in accordance with the following:

Record Identification	Record Type Determination	Protection/Storage Method	Processing Instructions
Appendix 1. WCRRF P101-25, Attachment B Drum Lift Pre-Engineered Critical Lift Plan, Attachment 1, WCRRF WCG Waste Processing Data Sheet Attachment 2, WCRRF WCG Drum Lift Inspection Data Sheet Attachment 3, WCRRF WCG Breaching (Opening) Unvented, Sealed Waste Packages Checklist Attachment 4, WCRRF WCG Breaching (Opening) Metal 5- to 30 gal Unvented, Sealed Waste Package Surveillance Attachment 5, WCRRF Prohibited Item Collection Drum Data Sheet	Quality Assurance (QA) Record	Supervision **SHALL** implement a reasonable level of protection to prevent loss and degradation. Records should be maintained in a one-hour fire rated metal file cabinet when not in use. The instructions in this section may vary depending on the record such as some records may be retained in an Operations Center for a period of time (e.g., 1 year) in order to provide trending data or evidence of compliance.	When the records are ready for final disposition, the record is transferred to Records Management in accordance with EP-DIR-AP-10003, Records Management Procedure For ADEP Employees.

12. REFERENCES

ABD-WFM-006, Technical Safety Requirements (TSRs) for Waste Characterization, Reduction, and Repackaging Facility (WCRRF)

AP-341-516, Operability Determination and Functionality Assessment

CCP-TP-113, CCP Standard Waste Visual Examination

CH-TRAMPAC, Contact Handled – Transuranic Waste Authorized Methods for Payload Control

DOE/WIPP-02-3122, Transuranic Waste Acceptance Criteria For Waste Isolation Pilot Plant

EP-DIV-AP-0112, EWMO Pre-Job Briefings

EP-DIV-AP-13, EWMO TSR-Related Operational Limits Actions Compliance Tracking

EP-DIV-AP-20047, LTP Glovebox/Glovebag and Glove Safety Program

EP-DIV-AP-20098, LTP TRU Waste Remediation Safety Evaluation

EP-DIV-AP-0117, WDP Division Forms

EP-DIV-AP-0120, EWMO Watchbill Administration

EP-DIV-DOP-20043, LTP TRU Waste Container Labeling

EP-DIV-POLICY-20057, EWMO Health and Safety Policy-Manual Movement

EP-DIV-REPORT-09, Engineering Path Forward Report for CMR Wing 2 Containers

EP-DIR-AP-10003, Records Management Procedure For ADEP Employees

EP-WCRR-FO-DOP-0201, WCRRF and Building TA-50-69 TSR Mode Change

EP-WCRR-RM-AOP-0208, Special Shapes

12. REFERENCES (continued)

EP-WCRR-WO-DOP-0221, Preparing and Closing 55-gal Daughter Drum Assemblies

EP-WCRR-WO-DOP-0236, WCRRF Loading/Unloading SWB or 85-gal Drum

EP-WCRR-WO-DOP-0239, Verifying WCRRF Scales

EWMO-DO-07-042, Memo. Dtd. Jul 6 ,2007, WCRRF Pu-238 Glovebag Issue

Form 1489, Pre-Operational Inspection Record for Overhead Cranes and Hoists

P101-18, Procedure for Pause/Stop Work

P101-25, Cranes, Hoists, Lifting Devices, and Rigging Equipment

P330-6, Nonconformance Reporting

APPENDIX 1
Page 1 of 10

WCRRF DRUM LIFT CRITICAL LIFT PLAN (P101-25 Attachment B)

Table B-1. LANL Critical Lift Plan for Pre-Engineering Production Lift	
Name and company of person preparing this plan: LANS	
Date prepared: 1-31-2014	**Date of lift:**
Critical lift plan expiration date: N/A	**PIC:**
Client/customer: DOE/WIPP	Job #: N/A Project #: N/A
Lift location (building #, address, etc.): WCRRF, TA-50-69	This critical lift plan must be available when and where the lift is performed. How will this requirement be met? Kept on file in the WCRRF Operations Center.
A. Critical Lift Determination	
A lift will be determined critical if any of the following conditions are met. Check each answer with either a Yes or a No.	
1. If the load item were damaged or upset would it result in a release into the environment of radioactive or hazardous material exceeding the established permissible environmental limits?	Yes ____ No √
2. Is the load item unique and, if damaged, would it be irreplaceable or not repairable and is it vital to a system, facility or project operation?	Yes ____ No √
3. If the load item was damaged, would the cost to replace or repair the load item, or the delay in operations of having the load item damaged have a negative impact on facility, organizational, or DOE budgets to the extent that it would affect program commitments?	Yes ____ No √
4. If the load were mishandled or dropped, would the event cause any of the above noted consequences to nearby installations or facilities?	Yes ____ No √
5. Does the lift exceed 75% of the manufacturer's rated capacity for the crane, hoist, or mechanized equipment to be used in the lift?	Yes √ No ____
6. Does the load item require special care in handling because of weight, size, asymmetrical shape, undetermined center of gravity, installation tolerances, or other unusual factors?	Yes ____ No √
7. Is the lift an otherwise non-critical lift that must be made in close proximity to critical or expensive items that could be damaged as a result of contact with a hoisted load?	Yes ____ No √
8. Does the lift use two or more cranes, hoists, pieces of mechanized equipment, or a combination of such equipment?	Yes ____ No √
9. Is the lift such that the crane, hoist, or mechanized equipment could at any time come in contact with an energized high voltage power line?	Yes ____ No √
10. Could failure of this lift significantly impact the confidence of LANL customers or sponsors in the ability of LANL to safely execute current or future missions?	Yes ____ No √

APPENDIX 1
Page 2 of 10

Table B-1. LANL Critical Lift Plan (Cont.)

B. Pre-lift Checklist (Completed prior to each lift)

__ Crane's monthly and annual inspections current
__ Periodic maintenance complete
__ Crane inspected
__ Site-control in-place
__ Load test verified
__ Spotters in-place
__ Operator is qualified
__ Signal person identified
__ Riggers are qualified
__ Head-height checked
__ Rigging proof tested
__ Hoist-height checked
__ Proof tests verified
__ Signatures procured
__ Rigging inspected
__ Tailing info provided
__ Annual rig. Insp. current
__ Job briefing held
__ Work zones identified
__ Team is ready for lift

C. Personnel & Environmental Exposure

1. Any radiation exposure hazards? Yes
2. Any chemical exposure hazards? Yes
3. Any explosive hazards? No
4. Any exposure hazards to the public? No

If YES to any of the above, what precautions are needed?
1. RWP
2. IWD

5. Is EM&R notification required? No
When? N/A
Where? N/A
Who? N/A

D. Load Identification and Information

1. Load condition: ____ New ___ Used √ N/A
2. Wt. empty: N/A
3. Wt. of contents: N/A
4. Wt. of lifting beam: N/A
5. Wt. of rigging: N/A
6. Wt. of excess load material: N/A
7. Wt. of temporary lift frames: N/A
8. Total weight: > 468 lb ≤ 624 lb
9. Source of load weight information: _____
WCRRF drum scale
(drawings, calculations, dynamometers, etc.)
10. Page on drawing: N/A
11. Revision #: N/A Revision date: N/A
12. Center of gravity has been identified: N/A
13. Dimensions: Standard 55-gal drum
14. Location and type of lift points are shown: See attached figure.

E. Operating Equipment to be Used

1. Crane mfg. and model: Drum Lift: LANL Designed and Built
2. Crane S/N: N/A ID-No: Drum -01
3. Crane capacity: 624 lb
4. Trolley/travel restrictions: N/A
5. Load is what percent of crane capacity? 75 – 100 %
6. Are any crane, hoist, and equipment load charts required for this lift? Y _____ N √
Are they available to the operator?
Y _____ N _____ N/A √

APPENDIX 1
Page 3 of 10

Table B-1. LANL Critical Lift Plan (Cont.)	
F. Rigging	**I. Sketches & Drawings**
1.Hitch type(s): N/A 2. Sling type: WR ___ FW ___ RS __ Chain ___ (If more than one, write the number of each type on the appropriate line) N/A 3. Number of slings: N/A 4. Size: N/A 5. Shackle sizes: N/A 6. Shackle rated capacity: N/A tons 7. Sling assembly rated capacity: N/A lbs. 8. Shackle secured to load by: N/A 9. Shackle & lifting lug mating are OK? N/A 10. Temporary lift frames & weights: N/A 11. Supports & load grillages shown? N/A	In accordance with DOE-STD-1090-2007, *Hoisting and Rigging Standard,* rigging sketches must include–as applicable: 1. Identification and rated capacity of slings, lifting bars, rigging accessories, and below-the-hook lifting devices. N/A 2. Load-indicating devices. N/A 3. Load vectors (Sling Tension). N/A 4. Lifting points. N/A 5. Sling angles N/A 6. Boom and swing angles N/A 7. Methods of attachment. N/A 8. Crane orientations. N/A 9. Other factors affecting equipment capacity, such as load path sketch, key point heights, floor or soil bearing capacity, etc. Yes 10. Calculate and provide the rated capacity of equipment in the configuration in which it will be used. Yes Make sure that these items are included at a minimum.
G. Operating Area	**J. Notes/Things To Do**
1. Are obstructions present? No 2. Are clearance issues present? No 3. Is the lift area populated? No 4. Action items for 1, 2, & 3: Drawing provided	N/A
H. Practice Lift Required?	
1. Describe the lift No	
2. Team members involved in the practice lift must be those who will be involved in the actual lift. Are all of those members present? N/A	

APPENDIX 1
Page 4 of 10

Table B-1. LANL Critical Lift Plan (Cont.)

K. Personnel Assignments
List names of all persons involved in the lift and identify their roles (Operator, Signaler, Person In Charge [PIC], etc.). All must be qualified.

Name	Z Number	Role	Training Verified		Comments/Notes
			Y	N	
			Y	N	
			Y	N	
			Y	N	
			Y	N	
			Y	N	
			Y	N	

L. Review and Approval. List all that apply. (Must include the PIC and one other qualified person at a minimum and may include the health and safety rep., Responsible Line Manager [RLM], First Line Manager [FLM], responsible oversight org. rep., quality assurance rep., or others as required)

	Z Number	Organization	Concurrence / Approver's Signature
Responsible Line Manager		LTP-DDP	/s/John Guadagnoli /Randy Axtell
Crane Program SME	219935	OSH-ISH	/s/Clay Davis
IHS SME	120199	DSESH-EWMO	/s/Robert Gardner Winkle
CSE	233208	ES-EWMO	/s/Shawn West
PIC 1	240092	WCRRF LTP-DDP	/s/Clayton Mullins
Operator	240092	WCRRF LTP-DDP	/s/Joe Quintana
WCRRF SOS	240092	WCRRF LTP-DDP	/s/Clayton Mullins

APPENDIX 1
Page 5 of 10

M. Pre-lift Meeting					
Name	Z Number	Signature	Name	Z Number	Signature

APPENDIX 1
Page 6 of 10

Load Schematic & Rigging Method

Load Schematic & Rigging Method

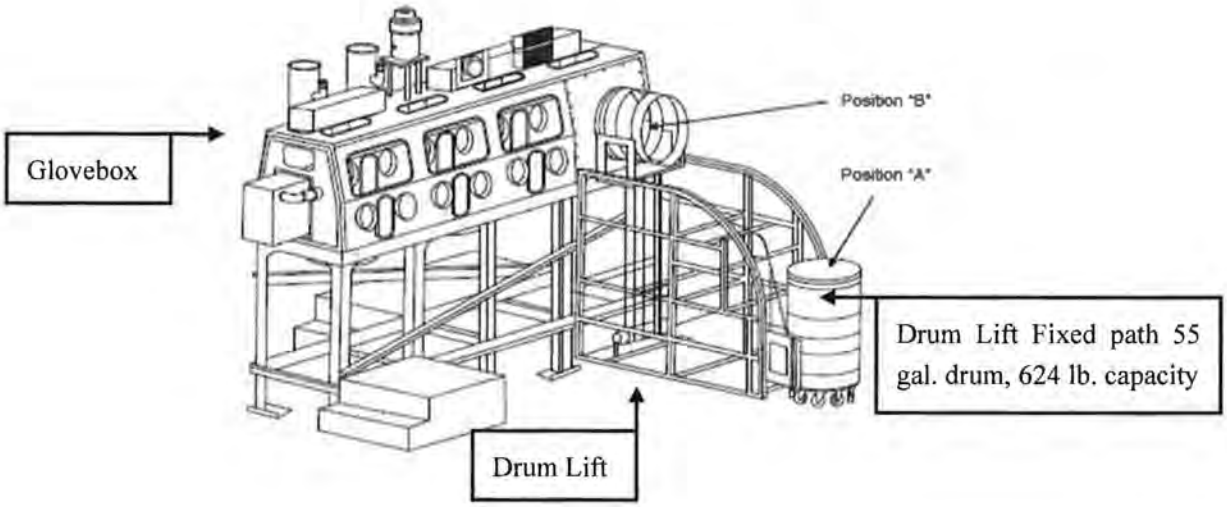

APPENDIX 1
Page 7 of 10

Load Travel Path/Personnel Placement

See Load Handling Sequence and Procedures

APPENDIX 1
Page 8 of 10

Load Handling Sequence & Procedures

Purpose

This critical lift plan is used for loading degraded or loss of integrity drums or drums that satisfy the critical lift requirements of P101-25 with the WCG Drum Lift as required by ABD-WFM-006, Technical Safety Requirements (TSRs) for Waste Characterization, Reduction, and Repackaging Facility (WCRRF). This critical lift plan must be used to lift and lower degraded drums with waste material using the WCG Drum Lift. This plan will be used to handle and prepare waste drums at Area-G and at WCRRF for a critical lift.

General Guidelines/Notes

This critical lift plan has been prepared in accordance with P101-25, Cranes, Hoists, Lifting Devices, and Rigging Equipment.
Drum handling operations involving degraded/loss of integrity drums or drums that satisfy the requirements for a critical lift in accordance with P101-25 (e.g., drums weighing greater than 468 lb) at WCRRF are performed using approved procedures and lifting equipment specifically designed for this operation.
The following information **SHALL** be reviewed during the critical lift pre-job brief:

1. All lifting and signaling **SHALL** be performed by a qualified operator. Supervision will be by a designated Qualified Crane Operator and Rigger Person-In-Charge (PIC) and documented on the WCRRF WCG Critical Lift Plan Concurrence Sheet.
2. The WCG Drum Lift and drums **SHALL** be visually inspected by the operator and/or qualified PIC. Any noted substandard item **SHALL** be cause for suspending operations until an acceptable replacement is acquired.
3. The rigging procedure **SHALL** be followed. Where changes are required due to site conditions, the changes **SHALL** be reviewed and approved by the Qualified Crane Operator and Rigger PIC.
4. The weight of the load **SHALL** include the 55 gal drum and lead blankets (if used for shielding purposes). In no case should the lift exceed 624 lb.
5. Communications between the WCG pendant operator and PIC **SHALL** be clear and unobstructed. The primary system **SHALL** be voice communications. Only designated, qualified signalers **SHALL** give signals to the operator. However, the operator **SHALL** obey a stop signal at all times, no matter who gives the signal.
6. A pre-lift meeting with all responsible persons **SHALL** be held before the lifts and each person **SHALL** be assigned specific duties and sign the pre-job sheet.
7. The equipment to be used for this lift will be as applicable: WCG Drum Lift.

APPENDIX 1
Page 9 of 10

Project Notes and Specifications

1. The primary goal is to perform a safe lift in a timely manner.
2. This lift has been frequently performed with equipment stated in this plan. A preliminary lift is not required but if any discrepancies are noted during the lift, the project **SHALL** be stopped and re-evaluated by the Qualified Operator, and Qualified Crane Operator and Rigger PIC.
3. The drum **SHALL** be positioned secured in the WCG Drum Lift to facilitate SAFE and efficient operation. The drum lift pendant operator **SHALL** announce operation of the lift before commencing raising/lowering of the drum and all personnel **SHALL** stand clear and to the side of drum movement. The work area for assembling the payload **SHALL** be limited to personnel necessary for the operation. (Example: Operator, signal personnel, PIC, and RCTs.)
4. The lift requires understanding by the entire crew. This lift plan **SHALL** be thoroughly reviewed by the personnel performing the lift and the Critical Lift / Pre-Lift Meeting **SHALL** be conducted before the lift to ensure that all personnel are aware of their assigned duties. Each person involved in the lift must attend the meeting and sign the attendance sheet.

Competent Person / Lift Supervisor

The responsible person for this lift is the designated Qualified Crane Operator and Rigger PIC.

Emergency Action Plan

1. In the event that an emergency occurs, all operations **SHALL** be discontinued and any raised load **SHALL** be lowered/secured, if possible. For specific casualties, operators will also perform required actions of applicable procedures in the WCRRF Response Manual.
2. Each portion of the lift presents a slightly different set of variables as related to a direction and area where the components may be set down temporarily during an emergency.
3. During the pre-lift meeting the operators, riggers, and spotter are to specifically discuss emergency actions at various points during the lift. If the raised load has to be secured the operator will do so and contact the RCT and Qualified Crane Operator and Rigger PIC. All non-essential personnel are to be kept clear of the lift area.
4. The operator and rigging personnel will not resume the lift operations without approval from the RCT and the Qualified Crane Operator and Rigger PIC.
5. In the event of an equipment malfunction and the drum cannot be lowered/secured:
   - The operation will be placed in a safe configuration.
   - The waste will be unloaded from the drum and the drum will be manually removed from the drum lift, if possible, or the CSE will be notified for the applicable actions.

APPENDIX 1
Page 10 of 10

Hazard Assessment
This lift has been reviewed in great detail to ensure a safe lift and minimize hazards. The following items have been identified as unique for this lift.

In no case **SHALL** material being lifted weigh more than 624 lb. (drum + lead shielding).

Test Lift—A test lift is not required for this operation.
Travel Path—At the pre-job/lift briefing a spotter(s) **SHALL** be designated to observe the load along the entire travel path (consider slopes and uneven surfaces).

Overhead Instructions—The Qualified Crane Operator and Rigger PIC and rigging crew **SHALL** physically verify the travel path is clear of overhead obstructions before beginning the lift.

Working Around the Load (Cone of Safety) - Absolutely NO ONE **SHALL** be under the load, or while it is being raised, lowered, or moved. The Qualified Crane Operator and Rigger PIC **SHALL** ensure that the area (in front of the WCG Drum Lift) is clear of non-essential personnel. Specific placement of operators and RCTs **SHALL** be established during the pre-lift meeting.

Securing the Drum Lifting Assembly—The rigging crew s **SHALL** inspect the WCG Drum Lift before lifting a drum.

Equipment List

Ensure the following equipment is present, has undergone physical inspection, is properly calibrated and is ready to support the critical lift steps:

- WCG Drum Lift

Work Steps for Loading a 55 Gallon Drum Using the WCG Drum Lift

Step 1 Verify the drums weighs less than 624 lb.

Step 2 Obtain key from key box, Insert key, and turn on the power to the drum lift.

Step 3 Using the drum lift pendent, lower the drum lift to the lower limit switch or until the bellyband of the lift cradle can grasp the drum evenly.

Step 4 Position the drum on the drum lift with the drum bolt ring accessible for lid removal when inside the glovebox.

Step 5 Close and secure the bellyband, ensuring the bag-off sleeve does not get caught on the bellyband.

Step 6 Raise the drum to the horizontal port and stop, leaving an adequate gap (approximately 12 inches) to mount the bag-off sleeve to the horizontal port.

Step 7 Bag on the parent drum in accordance with this procedure.

Step 8 Turn off the power to the drum lift, remove key, and place in key box.

APPENDIX 2
Page 1 of 1

WCRRF ALLOWED CONTAINER TYPES FOR REMEDIATION

The following "allowed" container types may be remediated in the WCRRF glovebox because there is no concern for hydrogen buildup within the container:

- Containers without a gasket (e.g. containers with slip lids, paint cans, "produce cans" and other similar containers) of any size
- Containers of any size with slip-on lids (with or without a gasket)
- Empty containers of any size
- Fiber board containers of any size
- Sealed containers of any size not containing TRU waste or free liquids
- Any containers with a volume < (less than) 4 liters
- Unvented 5- to 30-gal waste packages

APPENDIX 3

Page 1 of 1

EXAMPLE PREOPERATIONAL INSPECTION RECORD FOR OVERHEAD CRANES AND HOISTS

NOTE: Use these buttons to print or save the form. DO NOT use the browser tool bar.

Form 1489

Los Alamos NATIONAL LABORATORY

Preoperational Inspection Record for Overhead Cranes and Hoists

Inspector	Date Inspected	Location
Manufacturer and Type		Serial Number and Rated Capacity

Current Inspections

- Current Annual ANSI/OSHA Inspection Date: _____
- Current Annual Mechanical and Electrical (*if applicable*) PM's Date: _____
- Current Monthly Inspection Date: _____

Main or Auxiliary Hoist Rope			
Is there any distortion such as kinking, crushing, unstranding, bird-caging, heat damage, or core protrusion?	☐ Yes	☐ No	☐ N/A
Are there six randomly distorted broken wires per rope lay or three broken wires per strand per rope lay?	☐ Yes	☐ No	☐ N/A
Is there wear of 1/3 the original diameter of outside individual wires?	☐ Yes	☐ No	☐ N/A
Load Chain			
Is there elongation or distortion?	☐ Yes	☐ No	☒ N/A
Any twisting, corrosion, pitting, or discoloration?	☐ Yes	☐ No	☒ N/A
Any gouges, nicks, or weld splatter?	☐ Yes	☐ No	☒ N/A
Spooling, Reeving			
Is there cross-winding?	☐ Yes	☐ No	☐ N/A
Are the rope stays together and in alignment?	☐ Yes	☐ No	☐ N/A
Is there any double winding or overwinding?	☐ Yes	☐ No	☐ N/A
Is there minimum of two wraps at lowest position?	☐ Yes	☐ No	☐ N/A
Anchoring			
Anchoring secured or installed in accordance with manufacturer's recommendations?	☐ Yes	☐ No	☐ N/A
Is there minimum of two wire rope clips?	☐ Yes	☐ No	☒ N/A
Main or Auxiliary Hook			
Is the throat opening not greater than 15% of normal?	☐ Yes	☐ No	☒ N/A
Is there less than ten-degree twist out of plane?	☐ Yes	☐ No	☒ N/A
Any deformities or cracks?	☐ Yes	☐ No	☒ N/A
Are the safety latches present and functional?	☐ Yes	☐ No	☒ N/A
Markings			
Are the rated capacities conspicuously posted?	☐ Yes	☐ No	☐ N/A
Are the controllers properly marked? Are remote crane controllers affixed a label which contains the following information? (crane manufacturer, location, and other information specific to the unit being operated)	☐ Yes	☐ No	☐ N/A
Is the main disconnect properly marked?	☐ Yes	☐ No	☐ N/A
Are the items listed functional?			
Brakes	☐ Yes	☐ No	☐ N/A
Controllers	☐ Yes	☐ No	☐ N/A
Limit switches	☐ Yes	☐ No	☐ N/A
Lights, warning devices	☐ Yes	☐ No	☒ N/A
Trolley	☐ Yes	☐ No	☐ N/A
Bridge	☐ Yes	☐ No	☒ N/A
Main or auxiliary load	☐ Yes	☐ No	☐ N/A

Remarks:

Form 1489 (12/10)

EXAMPLE

APPENDIX 4

Page 1 of 1

VOLUMES OF CYLINDRICAL INNER CONTAINERS NEAR 4 LITERS

Diameter		Height		Volume (liters)
3"	7.6 cm	12"	30.5 cm	< 4
3"	7.6 cm	18"	45.7 cm	< 4
4"	10.7 cm	12"	30.5 cm	< 4
4"	10.7 cm	18"	45.7 cm	> 4
4.5"	11.4 cm	12"	30.5 cm	< 4
4.5"	11.4 cm	14"	35.6 cm	< 4
4.5"	11.4 cm	16"	40.6 cm	> 4
4.5"	11.4 cm	18"	45.7 cm	> 4
5"	12.7 cm	8"	20.3 cm	< 4
5"	12.7 cm	10"	24.5 cm	< 4
5"	12.7 cm	12"	30.5 cm	> 4
5"	12.7 cm	14"	35.6 cm	> 4
5.5"	14 cm	8"	20.3 cm	< 4
5.5"	14 cm	10"	24.5 cm	> 4
5.5"	14 cm	12"	30.5 cm	> 4
6"	15.2 cm	8"	20.3 cm	> 4
6"	15.2 cm	10"	24.5 cm	> 4
6.5"	16.5 cm	8"	20.3 cm	> 4
7"	17.8 cm	6.5"	16.5 cm	> 4

<4 = less than 4 liters and does not require remediation

> 4 = greater than 4 liters and requires remediation

APPENDIX 5
Page 1 of 1

FLOWCHART FOR PROCESSING OF HIGH DOSE ITEMS OF MIXED MATERIAL TYPES

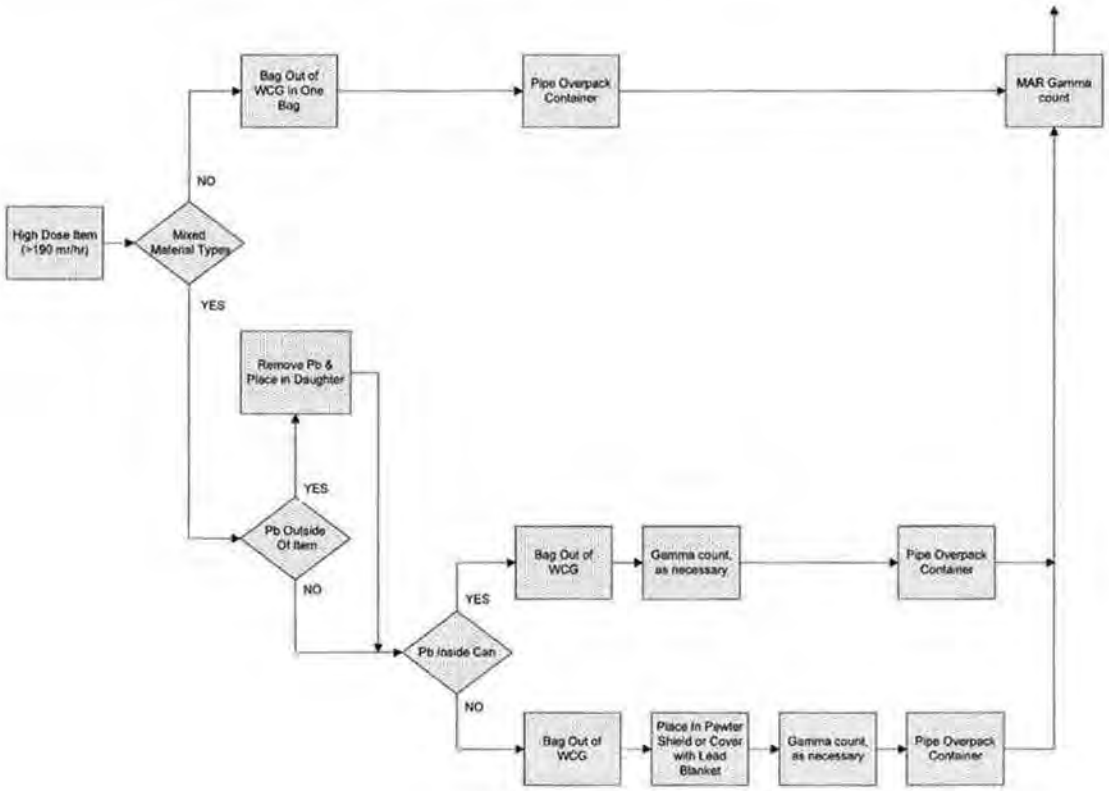

APPENDIX 6
Page 1 of 1

ADMINISTRATIVE CONTROL LOCK LOG SHEET

(Used when needed to track component manipulation)

NOTE: Refer to P315, Conduct of Operations Manual, Attachment 8, Section 8.1.5, for additional guidance.

Facility/Location: _____

Component No.	Authorized By (Shift Mgr.)	New Position	Positioned By	Verified By	Date/ Time	Restored By	Verified By	Date/ Time	Authorized By (Shift Mgr.)

APPENDIX 7

Page 1 of 1

MANUAL DRUM MOVEMENT SPECIAL INSTRUCTIONS

NOTE 1 *The following requirements below have been pre-approved in accordance with EP-DIV-Policy-20057, EWMO Health and Safety Policy.*

NOTE 2 *Any manual drum movement modifications or new scenario that may arise **SHALL** be performed in accordance with EP-DIV-Policy-20057.*

Manual Drum Movements within Transportainers:

- Two-person rule and a drum dolly chock to slide drums to and from the drum dolly and spill pallets
- Two-person rule to slide drums from one pallet to another
- Two-person rule to slide drums on the floor

Manual Drum movements to and from Scale:

- Mechanical means only

Manual Drum Movements between the 50-69 RBA and the CA

- Mechanical means
- Empty POCs mechanical mean only
- Empty 55 and 85s from pallet to dolly or dolly to pallet using two-person rule with a dolly chock

Manual Drum Movements to center of Scale

- Utilize mechanical means (e.g., drum grabber or versa lift)
- Two-person rule to slide drum to and from the center of the scale

Manual Movement of Drums onto Lift Table under the WCG

- Utilize versa lift, (if available) otherwise implement two-person rule to slide drum to and from the drum dolly and lift table with metatarsal guards

Manual Movement of Drums in Transport Vehicle for Receipt Inspection and Unloading

- Two-person rule to slide drums

ATTACHMENT 1
Page 1 of 4

WCRRF WCG WASTE PROCESSING DATA SHEET

4.1[6][B] Parent Waste Container No.: _____

6.2[4] Date Processed: _____

4.1[6][B] Prohibited Items:
☐ Sealed Containers > 4L ☐ Liquids ☐ Pressurized Containers ☐ N/A

4.1[6][B] Parent Waste Container RCRA Designations: _____

4.3[1]/4.3[2] **($)** TA-50-69 is in the OPERATION or WARM STANDBY MODE (TSR 1.2) ☐ OPERATIONS ☐ WARM STANDBY

4.3[4][B] Platform Scale: Equipment No.: _____
Cal. Due Date: _____

4.3[5][B] **($)** Three 1-Liter containers carbon spheroids or MET-L-X _____ (Initial and Date)
in WCG: (SAC 5.10.1.7.1)

4.3[6] **($)** Stationary Fire Watch has been established: ☐ N/A
(> 300 PE-Ci Equivalent Combustible) _____ (Initial and Date)
(SAC 5.10.1.7.2)

4.3[7 [A] Parent Waste Container degraded, loss of integrity,
or weighs greater than 468 lb but less than or equal to 624 lb:
☐ YES ☐ NO ☐ N/A

4.3[8][D] WCG glove and bag-in/bag-out bag inspection: ☐ SAT ☐ UNSAT ☐ N/A

Performed By: _____ / _____ / _____ / _____
Waste Handling Tech (print) Signature Z # Date

ATTACHMENT 1
Page 2 of 4

4.1[6][B]	Parent Waste Container No.: _____	
5.[18]	Prepared Parent Drum Weight (lb) including items secured to drum top, as applicable:	_____ lb
6.2[5][A]	Parent Drum Lead Blanket Weight (lb):	_____ lb ☐ N/A
6.2[5][B]/ 6.2[6]	Total Parent Drum Weight (lb)	_____ lb
6.2[7]	**($)** Total Parent Drum Weight < 624 lb (SR 4.5.1):	☐ SAT ☐ UNSAT
6.2[16]	Retaining clips in place	☐ SAT ☐ UNSAT
6.2[18][D]	Drum lift hinge pin retaining clip replaced. _____ / _____ / _____ (Initials / Z# / Date)	☐ N/A
6.2[26]	Approval to leave a parent drum attached to the WCG overnight:	

_____ / _____ / _____ / _____
EWMO-FOD (print) Signature Z # Date

ATTACHMENT 1
Page 3 of 4

4.1[6][B] Parent Waste Container No.: _____

Daughter Drums					
10.1[4]/10.2[4]	Daughter Drum No.				
10.1[4]	Daughter Drum Filter No.				
10.1[4]	Daughter Drum Bag Filter No.				
10.1[4]	Daughter Drum Purchase Order No.				
10.1[19][C]	WCG Fire Watch Stationed		☐ YES	☐ NO	☐ N/A
10.1[20][C][d]3/11.1[3]	WCG Fire Watch Secured		☐ YES	☐ NO	☐ N/A
10.2[4]	POC bag-on bag: Manufacturer				
	Model No.				
	Serial No.				
	Date of Manufacture				
10.2[5]	POC ID No				
10.2[6]/10.2[7][B]	POC Item Description				
10.2[13]	POC Assembly closed per Manufacturer's instructions. (Initial and Z#)				
10.2[14]	POC Assembly Gross Weight (lb)				
10.2[15]	POC Rad. Survey Results (mrem/hr)				
10.3[3][A]	Approx. Containerized Liquid Vol./Units				
10.3[5][A]	Free Liquid Volume/Units				
10.3[7][A]	Opaque/Non-penetrable Item Description:				
10.3[9][A]	PCB-contaminated Waste Description				
10.3[9][B]	PCB Item ID No.				
10.3[10]	Remaining Waste Description				
10.3[13]/10.4[10]/ 10.5[4]/10.6[10]	Daughter Drum % Full (%)				
10.5[3]/10.6[2]	Description Waste Added During Processing				

ATTACHMENT 1
Page 4 of 4

4.1[6][B] Parent Waste Container No.: _____

Comments: _____

_____
_____
_____
_____
_____
_____
_____
_____

11.1[1] Performed By: _____ / _____ / _____ / _____
Waste Handling Tech (print) Signature Z # Date

11.1[8] Reviewed By: _____ / _____ / _____ / _____
SOS or designee (print) Signature Z # Date/Time

ATTACHMENT 2
Page 1 of 2

WCRRF WCG DRUM LIFT INSPECTION DATA SHEET

6.1[2] Inspection Date: _____

6.1[4] Previous number of shaft bolt threads exposed:
- Upper Pulley Bolt Threads visible: _____
- Middle Pulley Bolt Threads visible: _____
- Lower Pulley Bolt Threads visible: _____

6.1[5] Current number of threads exposed out the end of the shaft bolt locknut:
- Upper Pulley Bolt Threads visible: _____
- Middle Pulley Bolt Threads visible: _____
- Lower Pulley Bolt Threads visible: _____

6.1[6] Shaft bolt end is flush with or extends out of the outer end of the shaft bolt locknut
- Upper Pulley Bolt Threads visible: ☐ YES ☐ NO
- Middle Pulley Bolt Threads visible: ☐ YES ☐ NO
- Lower Pulley Bolt Threads visible: ☐ YES ☐ NO

6.1[7] Shaft bolts do not show any sign of wear between the shaft bolt and the support flange (e.g., shaft not perpendicular to the flange plate):
- Upper Pulley Assembly: ☐ SAT ☐ UNSAT
- Middle Pulley Assembly: ☐ SAT ☐ UNSAT
- Lower Pulley Assembly: ☐ SAT ☐ UNSAT

6.1[9] New upper wire rope damage observed: ☐ YES ☐ NO

TABLE 3-1, UPPER WIRE ROPE DAMAGE

Description of Wire Rope Damage (e.g., wire break, corrosion, or pinch) (6.1[3]/6.1[10])	Previously Identified Damage (√) (6.1[3])	Damage Location from Hoist Drum (inches) (6.1[10])	Distance from damage to nearest wire break (inches) (6.1[10])

ATTACHMENT 2
Page 2 of 2

6.1[2] Inspection Date: _____

6.1[12] New lower wire rope damage observed: ☐ YES ☐ NO

TABLE 3-2, LOWER WIRE ROPE DAMAGE

Description of Wire Rope Damage (e.g., wire break, corrosion, or pinch) (6.1[3]/6.1[13])	Previously Identified Damage (√) (6.1[3])	Damage Location from Hoist Drum (inches) (6.1[13])	Distance from damage to nearest wire break (inches) (6.1[13])

6.1[14][A]/ 6.1[15] There are less than six randomly distributed broken wires in one rope lay or three broken wires in one strand in one rope lay.

☐ SAT ☐ UNSAT

Comments: _____

6.1[16][B]/ 11.1[1] Performed By: _____ / _____ / _____ / _____
Operator (print) Signature Z # Date

11.1[8] Reviewed By: _____ / _____ / _____ / _____
SOS or designee (print) Signature Z # Date/Time

ATTACHMENT 3
Page 1 of 1

WCRRF WCG BREACHING (OPENING) UNVENTED, SEALED WASTE PACKAGES

10.1[10][A] Parent Drum Identification #:_____ Page _____ of _____

Unvented-Sealed Waste Package type: (10.1[10][B])	☐ Metal 5- to 30-gal ☐ Non-metallic 5- to 30-gal ☐ < 5 gal	☐ Metal 5- to 30-gal ☐ Non-metallic 5- to 30-gal ☐ < 5 gal	☐ Metal 5- to 30-gal ☐ Non-metallic 5- to 30-gal ☐ < 5 gal	☐ Metal 5- to 30-gal ☐ Non-metallic 5- to 30-gal ☐ < 5 gal
($) Non-spark producing tools available in WCG. (SAC 5.10.1.6.1) (10.1[10][C])	☐ YES ☐ NO			
($)WCG electrical receptacles de-energized and locked open/off. (SAC 5.10.1.6.2) (10.1[10][D])	☐ SAT ☐ UNSAT			
($) 5- to 30-gal waste package lid restraint inspected for degradation (e.g., no indication of cracked parts, missing fasteners, loose or frayed parts, excessive wear, or unusual deformation), and determined to be capable of restricting lid. (SAC 5.10.1.5.1) (10.1[11][A])	☐ SAT ☐ UNSAT ☐ N/A < 5 gal	☐ SAT ☐ UNSAT ☐ N/A < 5 gal	☐ SAT ☐ UNSAT ☐ N/A < 5 gal	☐ SAT ☐ UNSAT ☐ N/A < 5 gal
($) Waste package lid restraint attached to waste package and proper installation verified. (SAC 5.10.1.5.1) (10.1[11][C])	☐ SAT ☐ UNSAT ☐ N/A < 5 gal	☐ SAT ☐ UNSAT ☐ N/A < 5 gal	☐ SAT ☐ UNSAT ☐ N/A < 5 gal	☐ SAT ☐ UNSAT ☐ N/A < 5 gal
($) Time 5- to 30-gal waste package vented. (Start Time) (SAC 5.10.1.5.2) or SAC 5.10.1.6.3) (10.1[11][E][f])/10.1[11][F][c]	_____ ☐ N/A < 5 gal	_____ ☐ N/A < 5 gal	_____ ☐ N/A < 5 gal	_____ ☐ N/A < 5 gal
($) Time since 5- to 30-gal waste package vented. (SAC 5.10.1.5.2) or SAC 5.10.1.6.3) (10.1[11][E][h])/10.1[11][F][e]	_____ ☐ N/A < 5 gal	_____ ☐ N/A < 5 gal	_____ ☐ N/A < 5 gal	_____ ☐ N/A < 5 gal
($) Elapsed time since 5- to 30-gal waste package vented is ≥ 30 minutes, and glovebox operations may resume and WCG electrical receptacles may be re-energized. (SAC 5.10.1.5.2) or SAC 5.10.1.6.3) (10.1[11][E][i]) 10.1[11][F][f]	☐ SAT ☐ UNSAT ☐ N/A < 5 gal	☐ SAT ☐ UNSAT ☐ N/A < 5 gal	☐ SAT ☐ UNSAT ☐ N/A < 5 gal	☐ SAT ☐ UNSAT ☐ N/A < 5 gal
($) Time < 5-gal waste package vented. (Start Time) (SAC 5.10.1.6.3) (10.1[12][A][f])	_____ ☐ N/A > 5 gal	_____ ☐ N/A > 5 gal	_____ ☐ N/A > 5 gal	_____ ☐ N/A > 5 gal
($) Time since < 5-gal waste package vented. (End Time) (SAC 5.10.1.6.3) (10.1[12][A][h])	_____ ☐ N/A > 5 gal	_____ ☐ N/A > 5 gal	_____ ☐ N/A > 5 gal	_____ ☐ N/A > 5 gal
($) Elapsed time since waste package vented is ≥ 30 minutes (SAC 5.10.1.6.3)	☐ SAT ☐ UNSAT	☐ SAT ☐ UNSAT	☐ SAT ☐ UNSAT	☐ SAT ☐ UNSAT
($) Lid restraint and waste package lid removed. (SAC 5.10.1.5.2 and 5.10.1.6.3) (10.1.[15])	_____	_____	_____	_____
($) WCG electrical receptacles may be re-energized. (SAC 5.10.1.6.3) (10.1[18])	_____ ☐ SAT ☐ UNSAT	_____ ☐ SAT ☐ UNSAT	_____ ☐ SAT ☐ UNSAT	_____ ☐ SAT ☐ UNSAT

Comments: _____

11.1[1] Performed By: _____ / _____ / _____ / _____
Operator (print) Signature Z # Date

11.1[8] Reviewed By: _____ / _____ / _____ / _____
SOS or designee (print) Signature Z # Date/Time

ATTACHMENT 4
Page 1 of 1

WCRRF WCG BREACHING (OPENING) 5- to 30-gal
METAL UNVENTED, SEALED WASTE PACKAGE SURVEILLANCE

10.1[10][E][a] Waste Container ID: _____

10.1[10][E][b] **($)** 55-gal parent drum containing an unvented-sealed METAL 5- to 30-gal waste package grounded to the WCG with a grounding strap that is firmly attached at all ends to clean-bare metal surfaces. (SR 4.6.1) ☐ SAT ☐ UNSAT

10.1[10][E][c] **VERIFY** that the grounding strap is attached ☐ SAT ☐ UNSAT

10.1[11][D][a] **($)** Unvented-sealed METAL 5- to 30-gal waste package grounded to the WCG with a grounding strap that is firmly attached at all ends to clean-bare metal surfaces. (SR 4.6.1) ☐ SAT ☐ UNSAT

10.1[11][D][c] **VERIFY** that the grounding strap is attached ☐ SAT ☐ UNSAT

11.1[11[E] Verified By: _____ / _____ / _____ / _____
Print Signature Z # Date

11.1[11[E][c]/ 11.1[12][A][c] Drill set to 640 rpm or less _____
Initials/Z#

Comments: _____

11.1[1] Performed By: _____ / _____ / _____ / _____
Waste Handling Tech (print) Signature Z # Date

11.1[2][D] Reviewed By: _____ / _____ / _____ / _____
CSE (print) Signature Z # Date

11.1[6][A] Acceptance criteria satisfied: ☐ YES ☐ NO

11.1[8] Reviewed By: _____ / _____ / _____ / _____
SOS or designee (print) Signature Z # Date/Time

ATTACHMENT 5

Page 1 of 1

WCRRF PROHIBITED ITEM COLLECTION DRUM DATA SHEET

Container No. (10.3[8][B][e]):	Type (10.3[8][B][e]): ☐ Pressurized Container ☐ Aerosol Cans ☐ Other: _____		Date Created (10.3[8][B][e]):	Page ____ of ____

Date Item Added (10.3[8][B][e])	Item ID No. (10.3[8][B][e])	Parent Container No. (10.3[8][B][e])	Parent Accumulation Start Date (10.3[8][B][e])	Parent EPA Codes (10.3[8][B][e])	Item Description (10.3[8][B][e])	Item Shape (10.3[8][B][e])	Item Size (10.3[8][B][e])	Item Labeling (10.3[8][B][e])	Item Weight (lb) (10.3[8][B][e])	Initials/Z# (10.3[8][B][e])