HUSKY CDP

EDDY COUNTY, NEW MEXICO

NSR PERMIT APPLICATION



PREPARED FOR:
Ethan Boor
22777 Springwoods Village Parkway
W4.6B.355
Spring, Texas 77389

PREPARED BY:



Evan Tullos
Vice President

10/23/2019

HUSKY CDP

NSR PERMIT APPLICATION

Table of Contents

Tab 1	UA1 Form - Company and Facility Information
Tab 2	UA2 Form - Application Tables
Tab 3	Section 3 - Application Summary
Tab 4	Section 4 - Process Flow Sheet
Tab 5	Section 5 - Plot Plan Drawn To Scale
Tab 6	Section 6 - All Calculations
Tab 7	Section 7 - Information Used To Determine Emissions
Tab 8	Section 8 - Map(s)
Tab 9	Section 9 - Proof of Public Notice
Tab 10	Section 10 - Written Description of the Routine Operations of the Facility
Tab 11	Section 11 -Source Determination
Tab 12	Section 12 - PSD Applicability Determination for All Sources
Tab 13	Section 13 - Determination of State & Federal Air Quality Regulations
Tab 14	Section 14 - Operational Plan to Mitigate Emissions
Tab 15	Section 15 - Alternative Operating Scenarios
Tab 16	Section 16 - Air Dispersion Modeling
Tab 17	Section 17 - Compliance Test History
Tab 18	Section 18 - Addendum for Streamline Applications (Not Applicable)
Tab 19	Section 19 - Requirements for Title V Program
Tab 20	Section 20 - Other Relevant Information
Tab 21	Section 21 - Addendum for Landfill Applications (Not Applicable)
Tab 22	Section 22 - Certification
Tab 23	Section 23 - UA4
Tab 24	Confidential Black Oil PVT Study

Tab 1
UA1 Form - Company and Facility Information

Mail Application To:		**For Department use only:**
New Mexico Environment Department Air Quality Bureau Permits Section 525 Camino de los Marquez, Suite 1 Santa Fe, New Mexico, 87505 Phone: (505) 476-4300 Fax: (505) 476-4375 www.env.nm.gov/aqb		AIRS No.:

Universal Air Quality Permit Application

Use this application for NOI, NSR, or Title V sources.

Use this application for: the initial application, modifications, technical revisions, and renewals. For technical revisions, complete Sections, 1-A, 1-B, 2-E, 3, 9 and any other sections that are relevant to the requested action; coordination with the Air Quality Bureau permit staff prior to submittal is encouraged to clarify submittal requirements and to determine if more or less than these sections of the application are needed. Use this application for streamline permits as well. See Section 1-I for submittal instructions for other permits.

This application is submitted as (check all that apply)**:** ☐ Request for a No Permit Required Determination (no fee)
☐ **Updating** an application currently under NMED review. Include this page and all pages that are being updated (no fee required).
Construction Status: ☑ Not Constructed ☐ Existing Permitted (or NOI) Facility ☐ Existing Non-permitted (or NOI) Facility
Minor Source: ☐ a NOI 20.2.73 NMAC ☑ 20.2.72 NMAC application or revision ☐ 20.2.72.300 NMAC Streamline application
Title V Source: ☑ Title V (new) ☐ Title V renewal ☐ TV minor mod. ☐ TV significant mod. TV Acid Rain: ☐ New ☐ Renewal
PSD Major Source: ☑ PSD major source (new) ☐ minor modification to a PSD source ☐ a PSD major modification

Acknowledgements:

☑ I acknowledge that a pre-application meeting is available to me upon request. ☐ Title V Operating, Title IV Acid Rain, and NPR applications have no fees.

☑ $500 NSR application Filing Fee enclosed OR ☐ The full permit fee associated with 10 fee points (required w/ streamline applications).

☑ Check No.: 1282 in the amount of $500

☑ I acknowledge the required submittal format for the hard copy application is printed double sided 'head-to-toe', 2-hole punched (except the Sect. 2 landscape tables is printed 'head-to-head'), numbered tab separators. Incl. a copy of the check on a separate page.

☐ This facility qualifies to receive assistance from the Small Business Environmental Assistance program (SBEAP) and qualifies for 50% of the normal application and permit fees. Enclosed is a check for 50% of the normal application fee which will be verified with the Small Business Certification Form for your company.

☐ This facility qualifies to receive assistance from the Small Business Environmental Assistance Program (SBEAP) but does not qualify for 50% of the normal application and permit fees. To see if you qualify for SBEAP assistance and for the small business certification form go to https://www.env.nm.gov/aqb/sbap/small_business_criteria.html).

Citation: Please provide the **low level citation** under which this application is being submitted: **20.2.72.200.A.1 and 20.2.74.200.A NMAC** (e.g. application for a new minor source would be 20.2.72.200.A NMAC, one example for a Technical Permit Revision is 20.2.72.219.B.1.b NMAC, a Title V acid rain application would be: 20.2.70.200.C NMAC)

Section 1 – Facility Information

Section 1-A: Company Information

		AI # if known (see 1st 3 to 5 #s of permit IDEA ID No.):	Updating Permit/NOI #:
1	Facility Name: Husky CDP	Plant primary SIC Code (4 digits): 1311	
		Plant NAIC code (6 digits): 211120	
a	Facility Street Address (If no facility street address, provide directions from a prominent landmark): See 1-D.4		
2	Plant Operator Company Name: XTO Energy Inc.	Phone/Fax: (832) 625-0106	
a	Plant Operator Address: 22777 Springwood Village Parkway; W4.6B.355; Spring, TX 77389		

b	Plant Operator's New Mexico Corporate ID or Tax ID: 1522747	
3	Plant Owner(s) name(s): XTO Energy Inc.	Phone/Fax: (832) 625-0106
a	Plant Owner(s) Mailing Address(s): 22777 Springwood Village Parkway; W4.6B.355; Spring, TX 77389	
4	Bill To (Company): XTO Energy Inc.	Phone/Fax: (832) 625-0106
a	Mailing Address: 22777 Springwood Village Parkway; W4.6B.355; Spring, TX 77389	E-mail: ethan_boor@xtoenergy.com
5	☐ Preparer: ☑ Consultant: Evan Tullos – Vice President - PEI	Phone/Fax: (865) 850-2007
a	Mailing Address: 5 Cardinal Court; Edwardsville, IL 62025	E-mail: etullos@pei-tx.com
6	Plant Operator Contact: Ethan Boor	Phone/Fax: (832) 625-0106
a	Address: 22777 Springwood Village Parkway; W4.6B.355; Spring, TX 77389	E-mail: ethan_boor@xtoenergy.com
7	Air Permit Contact: Ethan Boor	Title: Environmental Engineer
a	E-mail: ethan_boor@xtoenergy.com	Phone/Fax: (832) 625-0106
b	Mailing Address: 22777 Springwood Village Parkway; W4.6B.355; Spring, TX 77389	
c	The designated Air permit Contact will receive all official correspondence (i.e. letters, permits) from the Air Quality Bureau.	

Section 1-B: Current Facility Status

1.a	Has this facility already been constructed? ☐ Yes ☑ No	1.b If yes to question 1.a, is it currently operating in New Mexico? ☐ Yes ☐ No
2	If yes to question 1.a, was the existing facility subject to a Notice of Intent (NOI) (20.2.73 NMAC) before submittal of this application? ☐ Yes ☐ No	If yes to question 1.a, was the existing facility subject to a construction permit (20.2.72 NMAC) before submittal of this application? ☐ Yes ☐ No
3	Is the facility currently shut down? ☐ Yes ☑ No	If yes, give month and year of shut down (MM/YY):
4	Was this facility constructed before 8/31/1972 and continuously operated since 1972? ☐ Yes ☑ No	
5	If Yes to question 3, has this facility been modified (see 20.2.72.7.P NMAC) or the capacity increased since 8/31/1972? ☐Yes ☐No ☐N/A	
6	Does this facility have a Title V operating permit (20.2.70 NMAC)? ☐ Yes ☑ No	If yes, the permit No. is: P-
7	Has this facility been issued a No Permit Required (NPR)? ☐ Yes ☑ No	If yes, the NPR No. is:
8	Has this facility been issued a Notice of Intent (NOI)? ☐ Yes ☑ No	If yes, the NOI No. is:
9	Does this facility have a construction permit (20.2.72/20.2.74 NMAC)? ☐ Yes ☑ No	If yes, the permit No. is:
10	Is this facility registered under a General permit (GCP-1, GCP-2, etc.)? ☐ Yes ☑ No	If yes, the register No. is:

Section 1-C: Facility Input Capacity & Production Rate

1	What is the facility's maximum input capacity, specify units (reference here and list capacities in Section 20, if more room is required)			
a	Current	Hourly: Not Constructed	Daily: Not Constructed	Annually: Not Constructed
b	Proposed	Hourly: 8.3 MBBls (Condensate) 10.0 MBBLS (Water) 31.25 MMcf (Gas)	Daily: 200 MBOPD (Condensate) 10.0 MBBLs (Water) 750 MMcf (Gas)	Annually: 73 MMBBLs (Condensate) 3.66 MMBBLs (Water) 273.75 Bcf (Gas)
2	What is the facility's maximum production rate, specify units (reference here and list capacities in Section 20, if more room is required)			

a	Current	Hourly: Not Constructed	Daily: Not Constructed	Annually: Not Constructed
b	Proposed	Hourly: 8.3 MBBls (Condensate) 10.0 MBBLS (Water) 31.25 MMcf (Gas)	Daily: 200 MBOPD (Condensate) 10.0 MBBLs (Water) 750 MMcf (Gas)	Annually: 73 MMBBLs (Condensate) 3.66 MMBBLs (Water) 273.75 Bcf (Gas)

Section 1-D: Facility Location Information

1	Section: 5	Range: 30E	Township: 22S	County: Eddy	Elevation (ft): 3153
2	UTM Zone: ☐ 12 or ☑ 13			Datum: ☐ NAD 27 ☐ NAD 83 ☑ WGS 84	
a	UTM E (in meters, to nearest 10 meters): 603290			UTM N (in meters, to nearest 10 meters): 3587810	
b	**AND** Latitude (deg., min., sec.): 32º 25' 21"			Longitude (deg., min., sec.): -103º 54' 05"	
3	Name and zip code of nearest New Mexico town: Loving - 88256				
4	Detailed Driving Instructions from nearest NM town (attach a road map if necessary): Drive E on G Howard Rd. for 1.5 miles to L on Highway 387. Drive 1.5 miles to R on NM 31. Drive 11.6 miles to R on Cimarron Rd. Drive 1.6 miles to L on lease road into site.				
5	The facility is 14.3 (distance) miles NE (direction) of Loving (nearest town).				
6	Status of land at facility (check one): ☐ Private ☐ Indian/Pueblo ☑ Federal BLM ☐ Federal Forest Service ☐ Other (specify)				
7	List all municipalities, Indian tribes, and counties within a ten (10) mile radius (20.2.72.203.B.2 NMAC) of the property on which the facility is proposed to be constructed or operated: Eddy, Lea				
8	**20.2.72** NMAC applications **only**: Will the property on which the facility is proposed to be constructed or operated be closer than 50 km (31 miles) to other states, Bernalillo County, or a Class I area (see www.env.nm.gov/aqb/modeling/class1areas.html)? ☑ Yes ☐ No (20.2.72.206.A.7 NMAC) If yes, list all with corresponding distances in kilometers: TX - 46.27				
9	Name nearest Class I area: Carlsbad Caverns				
10	Shortest distance (in km) from facility boundary to the boundary of the nearest Class I area (to the nearest 10 meters): 50.57				
11	Distance (meters) from the perimeter of the Area of Operations (AO is defined as the plant site inclusive of all disturbed lands, including mining overburden removal areas) to nearest residence, school or occupied structure: > 5				
12	Method(s) used to delineate the Restricted Area: Fence "**Restricted Area**" is an area to which public entry is effectively precluded. Effective barriers include continuous fencing, continuous walls, or other continuous barriers approved by the Department, such as rugged physical terrain with steep grade that would require special equipment to traverse. If a large property is completely enclosed by fencing, a restricted area within the property may be identified with signage only. Public roads cannot be part of a Restricted Area.				
13	Does the owner/operator intend to operate this source as a portable stationary source as defined in 20.2.72.7.X NMAC? ☐ Yes ☑ No A portable stationary source is not a mobile source, such as an automobile, but a source that can be installed permanently at one location or that can be re-installed at various locations, such as a hot mix asphalt plant that is moved to different job sites.				
14	Will this facility operate in conjunction with other air regulated parties on the same property? ☐ No ☐ Yes If yes, what is the name and permit number (if known) of the other facility?				

Section 1-E: Proposed Operating Schedule (The 1-E.1 & 1-E.2 operating schedules may become conditions in the permit.)

1	Facility **maximum** operating ($\frac{\text{hours}}{\text{day}}$): 24	($\frac{\text{days}}{\text{week}}$): 7	($\frac{\text{weeks}}{\text{year}}$): 52	($\frac{\text{hours}}{\text{year}}$): 8760		
2	Facility's maximum daily operating schedule (if less than 24 $\frac{\text{hours}}{\text{day}}$)? Start:	☐AM ☐PM	End:	☐AM ☐PM		
3	Month and year of anticipated start of construction: October 2020					
4	Month and year of anticipated construction completion: To be determined					
5	Month and year of anticipated startup of new or modified facility: 2022					

6	Will this facility operate at this site for more than one year? ☑ Yes ☐ No

Section 1-F: Other Facility Information

1	Are there any current Notice of Violations (NOV), compliance orders, or any other compliance or enforcement issues related to this facility? ☐ Yes ☑ No If yes, specify:		
a	If yes, NOV date or description of issue:		NOV Tracking No:
b	Is this application in response to any issue listed in 1-F, 1 or 1a above? ☐ Yes ☐ No If Yes, provide the 1c & 1d info below:		
c	Document Title:	Date:	Requirement # (or page # and paragraph #):
d	Provide the required text to be inserted in this permit:		
2	Is air quality dispersion modeling or modeling waiver being submitted with this application? ☑ Yes ☐ No		
3	Does this facility require an "Air Toxics" permit under 20.2.72.400 NMAC & 20.2.72.502, Tables A and/or B? ☐ Yes ☑ No		
4	Will this facility be a source of federal Hazardous Air Pollutants (HAP)? ☑ Yes ☐ No		
a	If Yes, what type of source? ☑ **Major** (☑ ≥10 tpy of any single HAP **OR** ☐ ≥25 tpy of any combination of HAPS) **OR** ☐ **Minor** (☐ <10 tpy of any single HAP **AND** ☐ <25 tpy of any combination of HAPS)		
5	Is any unit exempt under 20.2.72.202.B.3 NMAC? ☑ Yes ☐ No		
a	If yes, include the name of company providing commercial electric power to the facility: Excel Energy Commercial power is purchased from a commercial utility company, which specifically does not include power generated on site for the sole purpose of the user.		

Section 1-G: Streamline Application

(This section applies to 20.2.72.300 NMAC Streamline applications only)

1	☐ I have filled out Section 18, "Addendum for Streamline Applications." ☑ N/A (This is not a Streamline application.)

Section 1-H: Current Title V Information - Required for all applications from TV Sources

(Title V-source required information for all applications submitted pursuant to 20.2.72 NMAC (Minor Construction Permits), or 20.2.74/20.2.79 NMAC (Major PSD/NNSR applications), and/or 20.2.70 NMAC (Title V))

1	Responsible Official (R.O.) (20.2.70.300.D.2 NMAC): Carman Mullins		Phone: (832) 625 - 9863
a	R.O. Title: General Manager – Permian Business Unit	R.O. e-mail: Carman_Mullins@xtoenergy.com	
b	R. O. Address: 22777 Springwoods Village Pkwy Spring, TX 77380		
2	Alternate Responsible Official (20.2.70.300.D.2 NMAC):		Phone:
a	A. R.O. Title:	A. R.O. e-mail:	
b	A. R. O. Address:		
3	Company's Corporate or Partnership Relationship to any other Air Quality Permittee (List the names of any companies that have operating (20.2.70 NMAC) permits and with whom the applicant for this permit has a corporate or partnership relationship):		
4	Name of Parent Company ("Parent Company" means the primary name of the organization that owns the company to be permitted wholly or in part.):		
a	Address of Parent Company:		
5	Names of Subsidiary Companies ("Subsidiary Companies" means organizations, branches, divisions or subsidiaries, which are owned, wholly or in part, by the company to be permitted.):		
6	Telephone numbers & names of the owners' agents and site contacts familiar with plant operations:		

7	Affected Programs to include Other States, local air pollution control programs (i.e. Bernalillo) and Indian tribes: Will the property on which the facility is proposed to be constructed or operated be closer than 80 km (50 miles) from other states, local pollution control programs, and Indian tribes and pueblos (20.2.70.402.A.2 and 20.2.70.7.B)? If yes, state which ones and provide the distances in kilometers:

Section 1-I – Submittal Requirements

Each 20.2.73 NMAC (**NOI**), a 20.2.70 NMAC (**Title V**), a 20.2.72 NMAC (**NSR** minor source), or 20.2.74 NMAC (**PSD**) application package shall consist of the following:

Hard Copy Submittal Requirements:

1) One hard copy **original signed and notarized application package printed double sided 'head-to-toe' 2-hole punched** as we bind the document on top, not on the side; except Section 2 (landscape tables), which should be head-to-head. Please use **numbered tab separators** in the hard copy submittal(s) as this facilitates the review process. For NOI submittals only, hard copies of UA1, Tables 2A, 2D & 2F, Section 3 and the signed Certification Page are required. Please include a copy of the check on a separate page.

2) If the application is for a minor NSR, PSD, NNSR, or Title V application, include one working hard **copy** for Department use. This copy should be printed in book form, 3-hole punched, and **must be double sided**. Note that this is in addition to the head-to-to 2-hole punched copy required in 1) above. Minor NSR Technical Permit revisions (20.2.72.219.B NMAC) only need to fill out Sections 1-A, 1-B, 3, and should fill out those portions of other Section(s) relevant to the technical permit revision. TV Minor Modifications need only fill out Sections 1-A, 1-B, 1-H, 3, and those portions of other Section(s) relevant to the minor modification. NMED may require additional portions of the application to be submitted, as needed.

3) The entire NOI or Permit application package, including the full modeling study, should be submitted electronically. Electronic files for applications for NOIs, any type of General Construction Permit (GCP), or technical revisions to NSRs must be submitted with compact disk (CD) or digital versatile disc (DVD). For these permit application submittals, **two** CD copies are required (in sleeves, not crystal cases, please), with additional CD copies as specified below. NOI applications require only a single CD submittal. Electronic files for other New Source Review (construction) permits/permit modifications or Title V permits/permit modifications can be submitted on CD/DVD or sent through AQB's secure file transfer service.

Electronic files sent by (check one):

☐ CD/DVD attached to paper application

☑ secure electronic transfer. Air Permit Contact Name Ethan Boor

Email ethan_boor@xtoenergy.com

Phone number (832) 625-0106

a. If the file transfer service is chosen by the applicant, after receipt of the application, the Bureau will email the applicant with instructions for submitting the electronic files through a secure file transfer service. Submission of the electronic files through the file transfer service needs to be completed within 3 business days after the invitation is received, so the applicant should ensure that the files are ready when sending the hard copy of the application. The applicant will not need a password to complete the transfer. **Do not use the file transfer service for NOIs, any type of GCP, or technical revisions to NSR permits.**

4) Optionally, the applicant may submit the files with the application on compact disk (CD) or digital versatile disc (DVD) following the instructions above and the instructions in 5 for applications subject to PSD review.

5) If **air dispersion modeling** is required by the application type, include the **NMED Modeling Waiver** and/or electronic air dispersion modeling report, input, and output files. The dispersion modeling ***summary report only*** should be submitted as hard copy(ies) unless otherwise indicated by the Bureau.

6) If the applicant submits the electronic files on CD and the application is subject to PSD review under 20.2.74 NMAC (PSD) or NNSR under 20.2.79 NMC include,
   a. one additional CD copy for US EPA,
   b. one additional CD copy for each federal land manager affected (NPS, USFS, FWS, USDI) and,
   c. one additional CD copy for each affected regulatory agency other than the Air Quality Bureau.

   If the application is submitted electronically through the secure file transfer service, these extra CDs do not need to be submitted.

Electronic Submittal Requirements [in addition to the required hard copy(ies)]:

1) All required electronic documents shall be submitted as 2 separate CDs or submitted through the AQB secure file transfer service. Submit a single PDF document of the entire application as submitted and the individual documents comprising the application.

2) The documents should also be submitted in Microsoft Office compatible file format (Word, Excel, etc.) allowing us to access the text and formulas in the documents (copy & paste). Any documents that cannot be submitted in a Microsoft Office compatible

format shall be saved as a PDF file from within the electronic document that created the file. If you are unable to provide Microsoft office compatible electronic files or internally generated PDF files of files (items that were not created electronically: i.e. brochures, maps, graphics, etc,), submit these items in hard copy format. We must be able to review the formulas and inputs that calculated the emissions.

3) It is preferred that this application form be submitted as 4 electronic files (3 MSWord docs: Universal Application section 1 [UA1], Universal Application section 3-19 [UA3], and Universal Application 4, the modeling report [UA4]) and 1 Excel file of the tables (Universal Application section 2 [UA2]). Please include as many of the 3-19 Sections as practical in a single MS Word electronic document. Create separate electronic file(s) if a single file becomes too large or if portions must be saved in a file format other than MS Word.

4) The electronic file names shall be a maximum of 25 characters long (including spaces, if any). The format of the electronic Universal Application shall be in the format: "A-3423-FacilityName". The "A" distinguishes the file as an application submittal, as opposed to other documents the Department itself puts into the database. Thus, all electronic application submittals should begin with "A-". Modifications to existing facilities should use the core permit number (i.e. '3423') the Department assigned to the facility as the next 4 digits. Use 'XXXX' for new facility applications. The format of any separate electronic submittals (additional submittals such as non-Word attachments, re-submittals, application updates) and Section document shall be in the format: "A-3423-9-description", where "9" stands for the section # (in this case Section 9-Public Notice). Please refrain, as much as possible, from submitting any scanned documents as this file format is extremely large, which uses up too much storage capacity in our database. Please take the time to fill out the header information throughout all submittals as this will identify any loose pages, including the Application Date (date submitted) & Revision number (0 for original, 1, 2, etc.; which will help keep track of subsequent partial update(s) to the original submittal. Do not use special symbols (#, @, etc.) in file names. The footer information should not be modified by the applicant.

Table of Contents

Section 1: **General Facility Information**
Section 2: **Tables**
Section 3: **Application Summary**
Section 4: **Process Flow Sheet**
Section 5: **Plot Plan Drawn to Scale**
Section 6: **All Calculations**
Section 7: **Information Used to Determine Emissions**
Section 8: **Map(s)**
Section 9: **Proof of Public Notice**
Section 10: **Written Description of the Routine Operations of the Facility**
Section 11: **Source Determination**
Section 12: **PSD Applicability Determination for All Sources & Special Requirements for a PSD Application**
Section 13: **Discussion Demonstrating Compliance with Each Applicable State & Federal Regulation**
Section 14: **Operational Plan to Mitigate Emissions**
Section 15: **Alternative Operating Scenarios**
Section 16: **Air Dispersion Modeling**
Section 17: **Compliance Test History**
Section 18: **Addendum for Streamline Applications (streamline applications only)**
Section 19: **Requirements for the Title V (20.2.70 NMAC) Program (Title V applications only)**
Section 20: **Other Relevant Information**
Section 21: **Addendum for Landfill Applications**
Section 22: **Certification Page**

Tab 2
UA2 Form - Application Tables

Table 2-A: Regulated Emission Sources (ALL EQUIPMENT FOR FULL CDP/COGEN BUILDOUT)

Unit and stack numbering must correspond throughout the application package. If applying for a NOI under 20.2.73 NMAC, equipment exemptions under 2.72.202 NMAC do not apply.

Unit Number[1]	Source Description	Make	Model #	Serial #	Manufacturer's Rated Capacity[3] (Specify Units)	Requested Permitted Capacity[3] (Specify Units)	Date of Manufacture[2] / Date of Construction/ Reconstruction[2]	Controlled by Unit # / Emissions vented to Stack #	Source Classification Code (SCC)	For Each Piece of Equipment, Check One	RICE Ignition Type (CI, SI, 4SLB, 4SRB, 2SLB)[4]	Replacing Unit No.
SHTR1	Stabilization Hot Oil Heater (64.83 MMBtu/hr)	THM	N/A	TBD	64.83 MMBtu/hr	64.83 MMBtu/hr	TBD / TBD	NA / SHTR1	31000403	☐ Existing (unchanged) ☐ To be Removed ☑ New/Additional ☐ Replacement Unit ☐ To Be Modified ☐ To be Replaced	N/A	N/A
SHTR2	Stabilization Hot Oil Heater (64.83 MMBtu/hr)	THM	N/A	TBD	64.83 MMBtu/hr	64.83 MMBtu/hr	TBD / TBD	NA / SHTR2	31000403	☐ Existing (unchanged) ☐ To be Removed ☑ New/Additional ☐ Replacement Unit ☐ To Be Modified ☐ To be Replaced	N/A	N/A
SHTR3	Stabilization Hot Oil Heater (64.83 MMBtu/hr)	THM	N/A	TBD	64.83 MMBtu/hr	64.83 MMBtu/hr	TBD / TBD	NA / SHTR3	31000403	☐ Existing (unchanged) ☐ To be Removed ☑ New/Additional ☐ Replacement Unit ☐ To Be Modified ☐ To be Replaced	N/A	N/A
SHTR4	Stabilization Hot Oil Heater (64.83 MMBtu/hr)	THM	N/A	TBD	64.83 MMBtu/hr	64.83 MMBtu/hr	TBD / TBD	NA / SHTR4	31000403	☐ Existing (unchanged) ☐ To be Removed ☑ New/Additional ☐ Replacement Unit ☐ To Be Modified ☐ To be Replaced	N/A	N/A
SHTR5	Stabilization Hot Oil Heater (64.83 MMBtu/hr)	THM	N/A	TBD	64.83 MMBtu/hr	64.83 MMBtu/hr	TBD / TBD	NA / SHTR5	31000403	☐ Existing (unchanged) ☐ To be Removed ☑ New/Additional ☐ Replacement Unit ☐ To Be Modified ☐ To be Replaced	N/A	N/A
SHTR6	Stabilization Hot Oil Heater (64.83 MMBtu/hr)	THM	N/A	TBD	64.83 MMBtu/hr	64.83 MMBtu/hr	TBD / TBD	NA / SHTR6	31000403	☐ Existing (unchanged) ☐ To be Removed ☑ New/Additional ☐ Replacement Unit ☐ To Be Modified ☐ To be Replaced	N/A	N/A
SHTR7	Stabilization Hot Oil Heater (64.83 MMBtu/hr)	THM	N/A	TBD	64.83 MMBtu/hr	64.83 MMBtu/hr	TBD / TBD	NA / SHTR7	31000403	☐ Existing (unchanged) ☐ To be Removed ☑ New/Additional ☐ Replacement Unit ☐ To Be Modified ☐ To be Replaced	N/A	N/A
SHTR8	Stabilization Hot Oil Heater (64.83 MMBtu/hr)	THM	N/A	TBD	64.83 MMBtu/hr	64.83 MMBtu/hr	TBD / TBD	NA / SHTR8	31000403	☐ Existing (unchanged) ☐ To be Removed ☑ New/Additional ☐ Replacement Unit ☐ To Be Modified ☐ To be Replaced	N/A	N/A
SHTR9	Stabilization Hot Oil Heater (64.83 MMBtu/hr)	THM	N/A	TBD	64.83 MMBtu/hr	64.83 MMBtu/hr	TBD / TBD	NA / SHTR9	31000403	☐ Existing (unchanged) ☐ To be Removed ☑ New/Additional ☐ Replacement Unit ☐ To Be Modified ☐ To be Replaced	N/A	N/A
SHTR10	Stabilization Hot Oil Heater (64.83 MMBtu/hr)	THM	N/A	TBD	64.83 MMBtu/hr	64.83 MMBtu/hr	TBD / TBD	NA / SHTR10	31000403	☐ Existing (unchanged) ☐ To be Removed ☑ New/Additional ☐ Replacement Unit ☐ To Be Modified ☐ To be Replaced	N/A	N/A
SHTR11	Stabilization Hot Oil Heater (64.83 MMBtu/hr)	THM	N/A	TBD	64.83 MMBtu/hr	64.83 MMBtu/hr	TBD / TBD	NA / SHTR11	31000403	☐ Existing (unchanged) ☐ To be Removed ☑ New/Additional ☐ Replacement Unit ☐ To Be Modified ☐ To be Replaced	N/A	N/A
SHTR12	Stabilization Hot Oil Heater (64.83 MMBtu/hr)	THM	N/A	TBD	64.83 MMBtu/hr	64.83 MMBtu/hr	TBD / TBD	NA / SHTR12	31000403	☐ Existing (unchanged) ☐ To be Removed ☑ New/Additional ☐ Replacement Unit ☐ To Be Modified ☐ To be Replaced	N/A	N/A
CHTR1	Cryo Hot Oil Heater (103.99 MMBtu/hr)	THM	N/A	TBD	103.99 MMBtu/hr	103.99 MMBtu/hr	TBD / TBD	NA / CHTR1	31000403	☐ Existing (unchanged) ☐ To be Removed ☑ New/Additional ☐ Replacement Unit ☐ To Be Modified ☐ To be Replaced	N/A	N/A

Table 2-A: Regulated Emission Sources (ALL EQUIPMENT FOR FULL CDP/COGEN BUILDOUT)

Unit and stack numbering must correspond throughout the application package. If applying for a NOI under 20.2.73 NMAC, equipment exemptions under 2.72.202 NMAC do not apply.

Unit Number[1]	Source Description	Make	Model #	Serial #	Manufacturer's Rated Capacity[3] (Specify Units)	Requested Permitted Capacity[3] (Specify Units)	Date of Manufacture[2] / Date of Construction/ Reconstruction[2]	Controlled by Unit # / Emissions vented to Stack #	Source Classification Code (SCC)	For Each Piece of Equipment, Check One	RICE Ignition Type (CI, SI, 4SLB, 4SRB, 2SLB)[4]	Replacing Unit No.
CHTR2	Cryo Hot Oil Heater (103.99 MMBtu/hr)	THM	N/A	TBD	103.99 MMBtu/hr	103.99 MMBtu/hr	TBD / TBD	NA / CHTR2	31000403	☐ Existing (unchanged) ☐ To be Removed ☑ New/Additional ☐ Replacement Unit ☐ To Be Modified ☐ To be Replaced	N/A	N/A
CHTR3	Cryo Hot Oil Heater (103.99 MMBtu/hr)	THM	N/A	TBD	103.99 MMBtu/hr	103.99 MMBtu/hr	TBD / TBD	NA / CHTR3	31000403	☐ Existing (unchanged) ☐ To be Removed ☑ New/Additional ☐ Replacement Unit ☐ To Be Modified ☐ To be Replaced	N/A	N/A
RHTR1	Regen Heater (39.14 MMBtu/hr)	THM	N/A	TBD	39.14 MMBtu/hr	39.14 MMBtu/hr	TBD / TBD	NA / RHTR1	31000405	☐ Existing (unchanged) ☐ To be Removed ☑ New/Additional ☐ Replacement Unit ☐ To Be Modified ☐ To be Replaced	N/A	N/A
RHTR2	Regen Heater (39.14 MMBtu/hr)	THM	N/A	TBD	39.14 MMBtu/hr	39.14 MMBtu/hr	TBD / TBD	NA / RHTR2	31000405	☐ Existing (unchanged) ☐ To be Removed ☑ New/Additional ☐ Replacement Unit ☐ To Be Modified ☐ To be Replaced	N/A	N/A
RHTR3	Regen Heater (39.14 MMBtu/hr)	THM	N/A	TBD	39.14 MMBtu/hr	39.14 MMBtu/hr	TBD / TBD	NA / RHTR3	31000405	☐ Existing (unchanged) ☐ To be Removed ☑ New/Additional ☐ Replacement Unit ☐ To Be Modified ☐ To be Replaced	N/A	N/A
FL1	SSM/Emergency Flare 1 (Dual Tip Flare)	Zeeco, Inc.	N/A	TBD	250 MMscfd	250 MMscfd	TBD / TBD	NA / FL1	31000160	☐ Existing (unchanged) ☐ To be Removed ☑ New/Additional ☐ Replacement Unit ☐ To Be Modified ☐ To be Replaced	N/A	N/A
FL2	SSM/Emergency Flare 2 (Dual Tip Flare)	Zeeco, Inc.	N/A	TBD	250 MMscfd	250 MMscfd	TBD / TBD	NA / FL2	31000160	☐ Existing (unchanged) ☐ To be Removed ☑ New/Additional ☐ Replacement Unit ☐ To Be Modified ☐ To be Replaced	N/A	N/A
FL3	Backup SSM/Emergency Flare 3 (Dual Tip Flare)	Zeeco, Inc.	N/A	TBD	250 MMscfd	250 MMscfd	TBD / TBD	NA / FL3	31000160	☐ Existing (unchanged) ☐ To be Removed ☑ New/Additional ☐ Replacement Unit ☐ To Be Modified ☐ To be Replaced	N/A	N/A
FL1-FL3OVHD-SSM	FL1-FL3 Stabilizer Overhead SSM Gas	Zeeco, Inc.	N/A	TBD	1.2 MMscfd	1.2 MMscfd	TBD / TBD	FL1-FL3 / FL1-FL3OVHD-SSM	31000160	☐ Existing (unchanged) ☐ To be Removed ☑ New/Additional ☐ Replacement Unit ☐ To Be Modified ☐ To be Replaced	N/A	N/A
FL1-FL3CRYO-SSM	FL1-FL3 Cryo Blowdown SSM Gas	Zeeco, Inc.	N/A	TBD	0.375 MMscfd	0.375 MMscfd	TBD / TBD	FL1-FL3 / FL1-FL3CRYO-SSM	31000160	☐ Existing (unchanged) ☐ To be Removed ☑ New/Additional ☐ Replacement Unit ☐ To Be Modified ☐ To be Replaced	N/A	N/A
IFR1	Oil Storage 1 (100,000 bbl)	Advance Tank	N/A	TBD	100,000 bbl	100,000 bbl	TBD / TBD	NA / IFR1	40400331	☐ Existing (unchanged) ☐ To be Removed ☑ New/Additional ☐ Replacement Unit ☐ To Be Modified ☐ To be Replaced	N/A	N/A
IFR2	Oil Storage 2 (100,000 bbl)	Advance Tank	N/A	TBD	100,000 bbl	100,000 bbl	TBD / TBD	NA / IFR2	40400331	☐ Existing (unchanged) ☐ To be Removed ☑ New/Additional ☐ Replacement Unit ☐ To Be Modified ☐ To be Replaced	N/A	N/A

Table 2-A: Regulated Emission Sources (ALL EQUIPMENT FOR FULL CDP/COGEN BUILDOUT)

Unit and stack numbering must correspond throughout the application package. If applying for a NOI under 20.2.73 NMAC, equipment exemptions under 2.72.202 NMAC do not apply.

Unit Number[1]	Source Description	Make	Model #	Serial #	Manufacturer's Rated Capacity[3] (Specify Units)	Requested Permitted Capacity[3] (Specify Units)	Date of Manufacture[2] / Date of Construction/ Reconstruction[2]	Controlled by Unit # / Emissions vented to Stack #	Source Classification Code (SCC)	For Each Piece of Equipment, Check One	RICE Ignition Type (CI, SI, 4SLB, 4SRB, 2SLB)[4]	Replacing Unit No.
IFR3	Oil Storage 3 (100,000 bbl)	Advance Tank	N/A	TBD	100,000 bbl	100,000 bbl	TBD / TBD	NA / IFR3	40400331	☐ Existing (unchanged) ☐ To be Removed ☑ New/Additional ☐ Replacement Unit ☐ To Be Modified ☐ To be Replaced	N/A	N/A
IFR4	Oil Storage 4 (100,000 bbl)	Advance Tank	N/A	TBD	100,000 bbl	100,000 bbl	TBD / TBD	NA / IFR4	40400331	☐ Existing (unchanged) ☐ To be Removed ☑ New/Additional ☐ Replacement Unit ☐ To Be Modified ☐ To be Replaced	N/A	N/A
OTK1	3rd-Party Oil Storage 1	Advance Tank	N/A	TBD	2,000 bbl	2,000 bbl	TBD / TBD	ECD1 / ECD1	40400311	☐ Existing (unchanged) ☐ To be Removed ☑ New/Additional ☐ Replacement Unit ☐ To Be Modified ☐ To be Replaced	N/A	N/A
OTK2	3rd-Party Oil Storage 2	Advance Tank	N/A	TBD	2,000 bbl	2,000 bbl	TBD / TBD	ECD1 / ECD1	40400311	☐ Existing (unchanged) ☐ To be Removed ☑ New/Additional ☐ Replacement Unit ☐ To Be Modified ☐ To be Replaced	N/A	N/A
OTK3	3rd-Party Oil Storage 3	Advance Tank	N/A	TBD	2,000 bbl	2,000 bbl	TBD / TBD	ECD1 / ECD1	40400311	☐ Existing (unchanged) ☐ To be Removed ☑ New/Additional ☐ Replacement Unit ☐ To Be Modified ☐ To be Replaced	N/A	N/A
OTK4	3rd-Party Oil Storage 4	Advance Tank	N/A	TBD	2,000 bbl	2,000 bbl	TBD / TBD	ECD1 / ECD1	40400311	☐ Existing (unchanged) ☐ To be Removed ☑ New/Additional ☐ Replacement Unit ☐ To Be Modified ☐ To be Replaced	N/A	N/A
OTK5	3rd-Party Oil Storage 5	Advance Tank	N/A	TBD	2,000 bbl	2,000 bbl	TBD / TBD	ECD1 / ECD1	40400311	☐ Existing (unchanged) ☐ To be Removed ☑ New/Additional ☐ Replacement Unit ☐ To Be Modified ☐ To be Replaced	N/A	N/A
OTK6	3rd-Party Oil Storage 6	Advance Tank	N/A	TBD	2,000 bbl	2,000 bbl	TBD / TBD	ECD1 / ECD1	40400311	☐ Existing (unchanged) ☐ To be Removed ☑ New/Additional ☐ Replacement Unit ☐ To Be Modified ☐ To be Replaced	N/A	N/A
ECD1	Combustor	Zeeco, Inc.	N/A	TBD	N/A	N/A	TBD / TBD	NA / ECD1	31000209	☐ Existing (unchanged) ☐ To be Removed ☑ New/Additional ☐ Replacement Unit ☐ To Be Modified ☐ To be Replaced	N/A	N/A
TO1	Thermal Oxidizer	Zeeco, Inc.	N/A	TBD	31.5 MMBtu/hr	31.5 MMBtu/hr	TBD / TBD	NA / TO1	31000209	☐ Existing (unchanged) ☐ To be Removed ☑ New/Additional ☐ Replacement Unit ☐ To Be Modified ☐ To be Replaced	N/A	N/A
TO2	Thermal Oxidizer	Zeeco, Inc.	N/A	TBD	31.5 MMBtu/hr	31.5 MMBtu/hr	TBD / TBD	NA / TO2	31000209	☐ Existing (unchanged) ☐ To be Removed ☑ New/Additional ☐ Replacement Unit ☐ To Be Modified ☐ To be Replaced	N/A	N/A
TO3	Thermal Oxidizer	Zeeco, Inc.	N/A	TBD	31.5 MMBtu/hr	31.5 MMBtu/hr	TBD / TBD	NA / TO3	31000209	☐ Existing (unchanged) ☐ To be Removed ☑ New/Additional ☐ Replacement Unit ☐ To Be Modified ☐ To be Replaced	N/A	N/A
FUG	Fugitives	N/A	N/A	N/A	N/A	N/A	TBD / TBD	NA / FUG	31088811	☐ Existing (unchanged) ☐ To be Removed ☑ New/Additional ☐ Replacement Unit ☐ To Be Modified ☐ To be Replaced	N/A	N/A

Table 2-A: Regulated Emission Sources (ALL EQUIPMENT FOR FULL CDP/COGEN BUILDOUT)

Unit and stack numbering must correspond throughout the application package. If applying for a NOI under 20.2.73 NMAC, equipment exemptions under 2.72.202 NMAC do not apply.

Unit Number[1]	Source Description	Make	Model #	Serial #	Manufacturer's Rated Capacity[3] (Specify Units)	Requested Permitted Capacity[3] (Specify Units)	Date of Manufacture[2] / Date of Construction/ Reconstruction[2]	Controlled by Unit # / Emissions vented to Stack #	Source Classification Code (SCC)	For Each Piece of Equipment, Check One	RICE Ignition Type (CI, SI, 4SLB, 4SRB, 2SLB)[4]	Replacing Unit No.
SSM	Storage Tank SSM Emissions	N/A	N/A	N/A	N/A	N/A	TBD TBD	NA SSM	31088811	☐ Existing (unchanged) ☐ To be Removed ☑ New/Additional ☐ Replacement Unit ☐ To Be Modified ☐ To be Replaced	N/A	N/A
ROAD	Haul Road Fugitives	N/A	N/A	N/A	N/A	N/A	TBD TBD	NA ROAD	31088811	☐ Existing (unchanged) ☐ To be Removed ☑ New/Additional ☐ Replacement Unit ☐ To Be Modified ☐ To be Replaced	N/A	N/A
PWTK1	Produced Water Tank 1	TBD	N/A	TBD	750 bbl	750 bbl	TBD TBD	ECD1 ECD1	40400315	☐ Existing (unchanged) ☐ To be Removed ☑ New/Additional ☐ Replacement Unit ☐ To Be Modified ☐ To be Replaced	N/A	N/A
PWTK2	Produced Water Tank 2	TBD	N/A	TBD	750 bbl	750 bbl	TBD TBD	ECD1 ECD1	40400315	☐ Existing (unchanged) ☐ To be Removed ☑ New/Additional ☐ Replacement Unit ☐ To Be Modified ☐ To be Replaced	N/A	N/A
PWTL	Produced Water Loading	N/A	N/A	N/A	N/A	10,308 bbl/day	TBD TBD	NA PWTL	40400250	☐ Existing (unchanged) ☐ To be Removed ☑ New/Additional ☐ Replacement Unit ☐ To Be Modified ☐ To be Replaced	N/A	N/A
OTL	Slop Oil Loading	N/A	N/A	N/A	210 bbl/day	210 bbl/day	TBD TBD	NA OTL	40400250	☐ Existing (unchanged) ☐ To be Removed ☑ New/Additional ☐ Replacement Unit ☐ To Be Modified ☐ To be Replaced	N/A	N/A
AU1	Amine Unit 1	TBD	N/A	TBD	250 MMSCFD	250 MMSCFD	TBD TBD	TO1 TO1	31000305	☐ Existing (unchanged) ☐ To be Removed ☑ New/Additional ☐ Replacement Unit ☐ To Be Modified ☐ To be Replaced	N/A	N/A
AU2	Amine Unit 2	TBD	N/A	TBD	250 MMSCFD	250 MMSCFD	TBD TBD	TO2 TO2	31000305	☐ Existing (unchanged) ☐ To be Removed ☑ New/Additional ☐ Replacement Unit ☐ To Be Modified ☐ To be Replaced	N/A	N/A
AU3	Amine Unit 3	TBD	N/A	TBD	250 MMSCFD	250 MMSCFD	TBD TBD	TO3 TO3	31000305	☐ Existing (unchanged) ☐ To be Removed ☑ New/Additional ☐ Replacement Unit ☐ To Be Modified ☐ To be Replaced	N/A	N/A
GBS1	Gunbarrel Tank	Advance Tank	N/A	TBD	1,000 bbl	1,000 bbl	TBD TBD	ECD1 ECD1	31000506	☐ Existing (unchanged) ☐ To be Removed ☑ New/Additional ☐ Replacement Unit ☐ To Be Modified ☐ To be Replaced	N/A	N/A
OTK7	Slop Oil Tank	Advance Tank	N/A	TBD	500 bbl	500 bbl	TBD TBD	ECD1 ECD1	40400311	☐ Existing (unchanged) ☐ To be Removed ☑ New/Additional ☐ Replacement Unit ☐ To Be Modified ☐ To be Replaced	N/A	N/A
TUR1	Turbine	Mitsubishi	H-100	TBD	120 MW	120 MW	TBD TBD	CAT1 TUR1	20200203	☐ Existing (unchanged) ☐ To be Removed ☑ New/Additional ☐ Replacement Unit ☐ To Be Modified ☐ To be Replaced	N/A	N/A

Table 2-A: Regulated Emission Sources (ALL EQUIPMENT FOR FULL CDP/COGEN BUILDOUT)

Unit and stack numbering must correspond throughout the application package. If applying for a NOI under 20.2.73 NMAC, equipment exemptions under 2.72.202 NMAC do not apply.

Unit Number[1]	Source Description	Make	Model #	Serial #	Manufacturer's Rated Capacity[3] (Specify Units)	Requested Permitted Capacity[3] (Specify Units)	Date of Manufacture[2] / Date of Construction/ Reconstruction[2]	Controlled by Unit # / Emissions vented to Stack #	Source Classification Code (SCC)	For Each Piece of Equipment, Check One	RICE Ignition Type (CI, SI, 4SLB, 4SRB, 2SLB)[4]	Replacing Unit No.
TUR2	Turbine	Mitsubishi	H-100	TBD	120 MW	120 MW	TBD / TBD	CAT2 / TUR2	20200203	☐ Existing (unchanged) ☐ To be Removed ☑ New/Additional ☐ Replacement Unit ☐ To Be Modified ☐ To be Replaced	N/A	N/A
TUR3	Turbine	Mitsubishi	H-100	TBD	120 MW	120 MW	TBD / TBD	CAT3 / TUR3	20200203	☐ Existing (unchanged) ☐ To be Removed ☑ New/Additional ☐ Replacement Unit ☐ To Be Modified ☐ To be Replaced	N/A	N/A
TUR4	Turbine	Mitsubishi	H-100	TBD	120 MW	120 MW	TBD / TBD	CAT4 / TUR4	20200203	☐ Existing (unchanged) ☐ To be Removed ☑ New/Additional ☐ Replacement Unit ☐ To Be Modified ☐ To be Replaced	N/A	N/A
GEN1	Emergency Generator	Caterpillar	G3520H	TBD	3448 HP	3448 HP	TBD / TBD	NA / GEN1	20200254	☐ Existing (unchanged) ☐ To be Removed ☑ New/Additional ☐ Replacement Unit ☐ To Be Modified ☐ To be Replaced	4SLB	N/A
GEN2	Emergency Generator	Caterpillar	G3520H	TBD	3448 HP	3448 HP	TBD / TBD	NA / GEN2	20200254	☐ Existing (unchanged) ☐ To be Removed ☑ New/Additional ☐ Replacement Unit ☐ To Be Modified ☐ To be Replaced	4SLB	N/A
GEN3	Emergency Generator	Caterpillar	G3520H	TBD	3448 HP	3448 HP	TBD / TBD	NA / GEN3	20200254	☐ Existing (unchanged) ☐ To be Removed ☑ New/Additional ☐ Replacement Unit ☐ To Be Modified ☐ To be Replaced	4SLB	N/A
GEN4	Emergency Generator	Caterpillar	G3520H	TBD	3448 HP	3448 HP	TBD / TBD	NA / GEN4	20200254	☐ Existing (unchanged) ☐ To be Removed ☑ New/Additional ☐ Replacement Unit ☐ To Be Modified ☐ To be Replaced	4SLB	N/A
GEN5	Emergency Generator	Caterpillar	G3520H	TBD	3448 HP	3448 HP	TBD / TBD	NA / GEN5	20200254	☐ Existing (unchanged) ☐ To be Removed ☑ New/Additional ☐ Replacement Unit ☐ To Be Modified ☐ To be Replaced	4SLB	N/A
GEN6	Emergency Generator	Caterpillar	G3520H	TBD	3448 HP	3448 HP	TBD / TBD	NA / GEN6	20200254	☐ Existing (unchanged) ☐ To be Removed ☑ New/Additional ☐ Replacement Unit ☐ To Be Modified ☐ To be Replaced	4SLB	N/A
GEN7	Emergency Generator	Caterpillar	G3520H	TBD	3448 HP	3448 HP	TBD / TBD	NA / GEN7	20200254	☐ Existing (unchanged) ☐ To be Removed ☑ New/Additional ☐ Replacement Unit ☐ To Be Modified ☐ To be Replaced	4SLB	N/A
GEN8	Emergency Generator	Caterpillar	G3520H	TBD	3448 HP	3448 HP	TBD / TBD	NA / GEN8	20200254	☐ Existing (unchanged) ☐ To be Removed ☑ New/Additional ☐ Replacement Unit ☐ To Be Modified ☐ To be Replaced	4SLB	N/A

[1] Unit numbers must correspond to unit numbers in the previous NOI unless a complete cross reference table of all units in both NOIs is provided.

[2] Specify dates required to determine regulatory applicability.

[3] To properly account for power conversion efficiencies, generator set rated capacity shall be reported as the rated capacity of the engine in horsepower, not the kilowatt capacity of the generator set.

[4] "4SLB" means four stroke lean burn engine, "4SRB" means four stroke rich burn engine, "2SLB" means two stroke lean burn engine, "CI" means compression ignition, and "SI" means spark ignition

Table 2-A: Regulated Emission Sources (CDP BUILDOUT WITH NO TURBINES)

Unit and stack numbering must correspond throughout the application package. If applying for a NOI under 20.2.73 NMAC, equipment exemptions under 2.72.202 NMAC do not apply.

Unit Number[1]	Source Description	Make	Model #	Serial #	Manufacturer's Rated Capacity[3] (Specify Units)	Requested Permitted Capacity[3] (Specify Units)	Date of Manufacture[2] / Date of Construction/ Reconstruction[2]	Controlled by Unit # / Emissions vented to Stack #	Source Classification Code (SCC)	For Each Piece of Equipment, Check One	RICE Ignition Type (CI, SI, 4SLB, 4SRB, 2SLB)[4]	Replacing Unit No.
SHTR1	Stabilization Hot Oil Heater (64.83 MMBtu/hr)	THM	N/A	TBD	64.83 MMBtu/hr	64.83 MMBtu/hr	TBD / TBD	NA / SHTR1	31000403	☐ Existing (unchanged) ☐ To be Removed ☑ New/Additional ☐ Replacement Unit ☐ To Be Modified ☐ To be Replaced	N/A	N/A
SHTR2	Stabilization Hot Oil Heater (64.83 MMBtu/hr)	THM	N/A	TBD	64.83 MMBtu/hr	64.83 MMBtu/hr	TBD / TBD	NA / SHTR2	31000403	☐ Existing (unchanged) ☐ To be Removed ☑ New/Additional ☐ Replacement Unit ☐ To Be Modified ☐ To be Replaced	N/A	N/A
SHTR3	Stabilization Hot Oil Heater (64.83 MMBtu/hr)	THM	N/A	TBD	64.83 MMBtu/hr	64.83 MMBtu/hr	TBD / TBD	NA / SHTR3	31000403	☐ Existing (unchanged) ☐ To be Removed ☑ New/Additional ☐ Replacement Unit ☐ To Be Modified ☐ To be Replaced	N/A	N/A
SHTR4	Stabilization Hot Oil Heater (64.83 MMBtu/hr)	THM	N/A	TBD	64.83 MMBtu/hr	64.83 MMBtu/hr	TBD / TBD	NA / SHTR4	31000403	☐ Existing (unchanged) ☐ To be Removed ☑ New/Additional ☐ Replacement Unit ☐ To Be Modified ☐ To be Replaced	N/A	N/A
SHTR5	Stabilization Hot Oil Heater (64.83 MMBtu/hr)	THM	N/A	TBD	64.83 MMBtu/hr	64.83 MMBtu/hr	TBD / TBD	NA / SHTR5	31000403	☐ Existing (unchanged) ☐ To be Removed ☑ New/Additional ☐ Replacement Unit ☐ To Be Modified ☐ To be Replaced	N/A	N/A
SHTR6	Stabilization Hot Oil Heater (64.83 MMBtu/hr)	THM	N/A	TBD	64.83 MMBtu/hr	64.83 MMBtu/hr	TBD / TBD	NA / SHTR6	31000403	☐ Existing (unchanged) ☐ To be Removed ☑ New/Additional ☐ Replacement Unit ☐ To Be Modified ☐ To be Replaced	N/A	N/A
SHTR7	Stabilization Hot Oil Heater (64.83 MMBtu/hr)	THM	N/A	TBD	64.83 MMBtu/hr	64.83 MMBtu/hr	TBD / TBD	NA / SHTR7	31000403	☐ Existing (unchanged) ☐ To be Removed ☑ New/Additional ☐ Replacement Unit ☐ To Be Modified ☐ To be Replaced	N/A	N/A
SHTR8	Stabilization Hot Oil Heater (64.83 MMBtu/hr)	THM	N/A	TBD	64.83 MMBtu/hr	64.83 MMBtu/hr	TBD / TBD	NA / SHTR8	31000403	☐ Existing (unchanged) ☐ To be Removed ☑ New/Additional ☐ Replacement Unit ☐ To Be Modified ☐ To be Replaced	N/A	N/A
SHTR9	Stabilization Hot Oil Heater (64.83 MMBtu/hr)	THM	N/A	TBD	64.83 MMBtu/hr	64.83 MMBtu/hr	TBD / TBD	NA / SHTR9	31000403	☐ Existing (unchanged) ☐ To be Removed ☑ New/Additional ☐ Replacement Unit ☐ To Be Modified ☐ To be Replaced	N/A	N/A
SHTR10	Stabilization Hot Oil Heater (64.83 MMBtu/hr)	THM	N/A	TBD	64.83 MMBtu/hr	64.83 MMBtu/hr	TBD / TBD	NA / SHTR10	31000403	☐ Existing (unchanged) ☐ To be Removed ☑ New/Additional ☐ Replacement Unit ☐ To Be Modified ☐ To be Replaced	N/A	N/A
SHTR11	Stabilization Hot Oil Heater (64.83 MMBtu/hr)	THM	N/A	TBD	64.83 MMBtu/hr	64.83 MMBtu/hr	TBD / TBD	NA / SHTR11	31000403	☐ Existing (unchanged) ☐ To be Removed ☑ New/Additional ☐ Replacement Unit ☐ To Be Modified ☐ To be Replaced	N/A	N/A
SHTR12	Stabilization Hot Oil Heater (64.83 MMBtu/hr)	THM	N/A	TBD	64.83 MMBtu/hr	64.83 MMBtu/hr	TBD / TBD	NA / SHTR12	31000403	☐ Existing (unchanged) ☐ To be Removed ☑ New/Additional ☐ Replacement Unit ☐ To Be Modified ☐ To be Replaced	N/A	N/A

Table 2-A: Regulated Emission Sources (CDP BUILDOUT WITH NO TURBINES)

Unit and stack numbering must correspond throughout the application package. If applying for a NOI under 20.2.73 NMAC, equipment exemptions under 2.72.202 NMAC do not apply.

Unit Number[1]	Source Description	Make	Model #	Serial #	Manufacturer's Rated Capacity[3] (Specify Units)	Requested Permitted Capacity[3] (Specify Units)	Date of Manufacture[2] / Date of Construction/ Reconstruction[2]	Controlled by Unit # / Emissions vented to Stack #	Source Classification Code (SCC)	For Each Piece of Equipment, Check One	RICE Ignition Type (CI, SI, 4SLB, 4SRB, 2SLB)[4]	Replacing Unit No.
CHTR1	Cryo Hot Oil Heater (103.99 MMBtu/hr)	THM	N/A	TBD	103.99 MMBtu/hr	103.99 MMBtu/hr	TBD / TBD	NA / CHTR1	31000403	☐ Existing (unchanged) ☐ To be Removed ☑ New/Additional ☐ Replacement Unit ☐ To Be Modified ☐ To be Replaced	N/A	N/A
CHTR2	Cryo Hot Oil Heater (103.99 MMBtu/hr)	THM	N/A	TBD	103.99 MMBtu/hr	103.99 MMBtu/hr	TBD / TBD	NA / CHTR2	31000403	☐ Existing (unchanged) ☐ To be Removed ☑ New/Additional ☐ Replacement Unit ☐ To Be Modified ☐ To be Replaced	N/A	N/A
CHTR3	Cryo Hot Oil Heater (103.99 MMBtu/hr)	THM	N/A	TBD	103.99 MMBtu/hr	103.99 MMBtu/hr	TBD / TBD	NA / CHTR3	31000403	☐ Existing (unchanged) ☐ To be Removed ☑ New/Additional ☐ Replacement Unit ☐ To Be Modified ☐ To be Replaced	N/A	N/A
RHTR1	Regen Heater (39.14 MMBtu/hr)	THM	N/A	TBD	39.14 MMBtu/hr	39.14 MMBtu/hr	TBD / TBD	NA / RHTR1	31000405	☐ Existing (unchanged) ☐ To be Removed ☑ New/Additional ☐ Replacement Unit ☐ To Be Modified ☐ To be Replaced	N/A	N/A
RHTR2	Regen Heater (39.14 MMBtu/hr)	THM	N/A	TBD	39.14 MMBtu/hr	39.14 MMBtu/hr	TBD / TBD	NA / RHTR2	31000405	☐ Existing (unchanged) ☐ To be Removed ☑ New/Additional ☐ Replacement Unit ☐ To Be Modified ☐ To be Replaced	N/A	N/A
RHTR3	Regen Heater (39.14 MMBtu/hr)	THM	N/A	TBD	39.14 MMBtu/hr	39.14 MMBtu/hr	TBD / TBD	NA / RHTR3	31000405	☐ Existing (unchanged) ☐ To be Removed ☑ New/Additional ☐ Replacement Unit ☐ To Be Modified ☐ To be Replaced	N/A	N/A
FL1	SSM/Emergency Flare 1 (Dual Tip Flare)	Zeeco, Inc.	N/A	TBD	250 MMscfd	250 MMscfd	TBD / TBD	NA / FL1	31000160	☐ Existing (unchanged) ☐ To be Removed ☑ New/Additional ☐ Replacement Unit ☐ To Be Modified ☐ To be Replaced	N/A	N/A
FL2	SSM/Emergency Flare 2 (Dual Tip Flare)	Zeeco, Inc.	N/A	TBD	250 MMscfd	250 MMscfd	TBD / TBD	NA / FL2	31000160	☐ Existing (unchanged) ☐ To be Removed ☑ New/Additional ☐ Replacement Unit ☐ To Be Modified ☐ To be Replaced	N/A	N/A
FL3	Backup SSM/Emergency Flare 3 (Dual Tip Flare)	Zeeco, Inc.	N/A	TBD	250 MMscfd	250 MMscfd	TBD / TBD	NA / FL3	31000160	☐ Existing (unchanged) ☐ To be Removed ☑ New/Additional ☐ Replacement Unit ☐ To Be Modified ☐ To be Replaced	N/A	N/A
FL1-FL3OVHD-SSM	FL1-FL3 Stabilizer Overhead SSM Gas	Zeeco, Inc.	N/A	TBD	1.2 MMscfd	1.2 MMscfd	TBD / TBD	FL1-FL3 / FL1-FL3OVHD-SSM	31000160	☐ Existing (unchanged) ☐ To be Removed ☑ New/Additional ☐ Replacement Unit ☐ To Be Modified ☐ To be Replaced	N/A	N/A
FL1-FL3CRYO-SSM	FL1-FL3 Cryo Blowdown SSM Gas	Zeeco, Inc.	N/A	TBD	0.375 MMscfd	0.375 MMscfd	TBD / TBD	FL1-FL3 / FL1-FL3CRYO-SSM	31000160	☐ Existing (unchanged) ☐ To be Removed ☑ New/Additional ☐ Replacement Unit ☐ To Be Modified ☐ To be Replaced	N/A	N/A
IFR1	Oil Storage 1 (100,000 bbl)	Advance Tank	N/A	TBD	100,000 bbl	100,000 bbl	TBD / TBD	NA / IFR1	40400331	☐ Existing (unchanged) ☐ To be Removed ☑ New/Additional ☐ Replacement Unit ☐ To Be Modified ☐ To be Replaced	N/A	N/A

Table 2-A: Regulated Emission Sources (CDP BUILDOUT WITH NO TURBINES)

Unit and stack numbering must correspond throughout the application package. If applying for a NOI under 20.2.73 NMAC, equipment exemptions under 2.72.202 NMAC do not apply.

Unit Number[1]	Source Description	Make	Model #	Serial #	Manufacturer's Rated Capacity[3] (Specify Units)	Requested Permitted Capacity[3] (Specify Units)	Date of Manufacture[2] / Date of Construction/ Reconstruction[2]	Controlled by Unit # / Emissions vented to Stack #	Source Classification Code (SCC)	For Each Piece of Equipment, Check One	RICE Ignition Type (CI, SI, 4SLB, 4SRB, 2SLB)[4]	Replacing Unit No.
IFR2	Oil Storage 2 (100,000 bbl)	Advance Tank	N/A	TBD	100,000 bbl	100,000 bbl	TBD / TBD	NA / IFR2	40400331	☐ Existing (unchanged) ☐ To be Removed ☑ New/Additional ☐ Replacement Unit ☐ To Be Modified ☐ To be Replaced	N/A	N/A
IFR3	Oil Storage 3 (100,000 bbl)	Advance Tank	N/A	TBD	100,000 bbl	100,000 bbl	TBD / TBD	NA / IFR3	40400331	☐ Existing (unchanged) ☐ To be Removed ☑ New/Additional ☐ Replacement Unit ☐ To Be Modified ☐ To be Replaced	N/A	N/A
IFR4	Oil Storage 4 (100,000 bbl)	Advance Tank	N/A	TBD	100,000 bbl	100,000 bbl	TBD / TBD	NA / IFR4	40400331	☐ Existing (unchanged) ☐ To be Removed ☑ New/Additional ☐ Replacement Unit ☐ To Be Modified ☐ To be Replaced	N/A	N/A
OTK1	3rd-Party Oil Storage 1	Advance Tank	N/A	TBD	2,000 bbl	2,000 bbl	TBD / TBD	ECD1 / ECD1	40400311	☐ Existing (unchanged) ☐ To be Removed ☑ New/Additional ☐ Replacement Unit ☐ To Be Modified ☐ To be Replaced	N/A	N/A
OTK2	3rd-Party Oil Storage 2	Advance Tank	N/A	TBD	2,000 bbl	2,000 bbl	TBD / TBD	ECD1 / ECD1	40400311	☐ Existing (unchanged) ☐ To be Removed ☑ New/Additional ☐ Replacement Unit ☐ To Be Modified ☐ To be Replaced	N/A	N/A
OTK3	3rd-Party Oil Storage 3	Advance Tank	N/A	TBD	2,000 bbl	2,000 bbl	TBD / TBD	ECD1 / ECD1	40400311	☐ Existing (unchanged) ☐ To be Removed ☑ New/Additional ☐ Replacement Unit ☐ To Be Modified ☐ To be Replaced	N/A	N/A
OTK4	3rd-Party Oil Storage 4	Advance Tank	N/A	TBD	2,000 bbl	2,000 bbl	TBD / TBD	ECD1 / ECD1	40400311	☐ Existing (unchanged) ☐ To be Removed ☑ New/Additional ☐ Replacement Unit ☐ To Be Modified ☐ To be Replaced	N/A	N/A
OTK5	3rd-Party Oil Storage 5	Advance Tank	N/A	TBD	2,000 bbl	2,000 bbl	TBD / TBD	ECD1 / ECD1	40400311	☐ Existing (unchanged) ☐ To be Removed ☑ New/Additional ☐ Replacement Unit ☐ To Be Modified ☐ To be Replaced	N/A	N/A
OTK6	3rd-Party Oil Storage 6	Advance Tank	N/A	TBD	2,000 bbl	2,000 bbl	TBD / TBD	ECD1 / ECD1	40400311	☐ Existing (unchanged) ☐ To be Removed ☑ New/Additional ☐ Replacement Unit ☐ To Be Modified ☐ To be Replaced	N/A	N/A
ECD1	Combustor	Zeeco, Inc.	N/A	TBD	N/A	N/A	TBD / TBD	NA / ECD1	31000209	☐ Existing (unchanged) ☐ To be Removed ☑ New/Additional ☐ Replacement Unit ☐ To Be Modified ☐ To be Replaced	N/A	N/A
TO1	Thermal Oxidizer	Zeeco, Inc.	N/A	TBD	31.5 MMBtu/hr	31.5 MMBtu/hr	TBD / TBD	NA / TO1	31000209	☐ Existing (unchanged) ☐ To be Removed ☑ New/Additional ☐ Replacement Unit ☐ To Be Modified ☐ To be Replaced	N/A	N/A

Table 2-A: Regulated Emission Sources (CDP BUILDOUT WITH NO TURBINES)

Unit and stack numbering must correspond throughout the application package. If applying for a NOI under 20.2.73 NMAC, equipment exemptions under 2.72.202 NMAC do not apply.

Unit Number[1]	Source Description	Make	Model #	Serial #	Manufacturer's Rated Capacity[3] (Specify Units)	Requested Permitted Capacity[3] (Specify Units)	Date of Manufacture[2] / Date of Construction/ Reconstruction[2]	Controlled by Unit # / Emissions vented to Stack #	Source Classification Code (SCC)	For Each Piece of Equipment, Check One	RICE Ignition Type (CI, SI, 4SLB, 4SRB, 2SLB)[4]	Replacing Unit No.
TO2	Thermal Oxidizer	Zeeco, Inc.	N/A	TBD	31.5 MMBtu/hr	31.5 MMBtu/hr	TBD / TBD	NA / TO2	31000209	☐ Existing (unchanged) ☐ To be Removed ☑ New/Additional ☐ Replacement Unit ☐ To Be Modified ☐ To be Replaced	N/A	N/A
TO3	Thermal Oxidizer	Zeeco, Inc.	N/A	TBD	31.5 MMBtu/hr	31.5 MMBtu/hr	TBD / TBD	NA / TO3	31000209	☐ Existing (unchanged) ☐ To be Removed ☑ New/Additional ☐ Replacement Unit ☐ To Be Modified ☐ To be Replaced	N/A	N/A
FUG	Fugitives	N/A	N/A	N/A	N/A	N/A	TBD / TBD	NA / FUG	31088811	☐ Existing (unchanged) ☐ To be Removed ☑ New/Additional ☐ Replacement Unit ☐ To Be Modified ☐ To be Replaced	N/A	N/A
SSM	Storage Tank SSM Emissions	N/A	N/A	N/A	N/A	N/A	TBD / TBD	NA / SSM	31088811	☐ Existing (unchanged) ☐ To be Removed ☑ New/Additional ☐ Replacement Unit ☐ To Be Modified ☐ To be Replaced	N/A	N/A
ROAD	Haul Road Fugitives	N/A	N/A	N/A	N/A	N/A	TBD / TBD	NA / ROAD	31088811	☐ Existing (unchanged) ☐ To be Removed ☑ New/Additional ☐ Replacement Unit ☐ To Be Modified ☐ To be Replaced	N/A	N/A
PWTK1	Produced Water Tank 1	TBD	N/A	TBD	750 bbl	750 bbl	TBD / TBD	ECD1 / ECD1	40400315	☐ Existing (unchanged) ☐ To be Removed ☑ New/Additional ☐ Replacement Unit ☐ To Be Modified ☐ To be Replaced	N/A	N/A
PWTK2	Produced Water Tank 2	TBD	N/A	TBD	750 bbl	750 bbl	TBD / TBD	ECD1 / ECD1	40400315	☐ Existing (unchanged) ☐ To be Removed ☑ New/Additional ☐ Replacement Unit ☐ To Be Modified ☐ To be Replaced	N/A	N/A
PWTL	Produced Water Loading	N/A	N/A	N/A	N/A	10,308 bbl/day	TBD / TBD	NA / PWTL	40400250	☐ Existing (unchanged) ☐ To be Removed ☑ New/Additional ☐ Replacement Unit ☐ To Be Modified ☐ To be Replaced	N/A	N/A
OTL	Slop Oil Loading	N/A	N/A	N/A	210 bbl/day	210 bbl/day	TBD / TBD	NA / OTL	40400250	☐ Existing (unchanged) ☐ To be Removed ☑ New/Additional ☐ Replacement Unit ☐ To Be Modified ☐ To be Replaced	N/A	N/A
AU1	Amine Unit 1	TBD	N/A	TBD	250 MMSCFD	250 MMSCFD	TBD / TBD	TO1 / TO1	31000305	☐ Existing (unchanged) ☐ To be Removed ☑ New/Additional ☐ Replacement Unit ☐ To Be Modified ☐ To be Replaced	N/A	N/A
AU2	Amine Unit 2	TBD	N/A	TBD	250 MMSCFD	250 MMSCFD	TBD / TBD	TO2 / TO2	31000305	☐ Existing (unchanged) ☐ To be Removed ☑ New/Additional ☐ Replacement Unit ☐ To Be Modified ☐ To be Replaced	N/A	N/A

Table 2-A: Regulated Emission Sources (CDP BUILDOUT WITH NO TURBINES)

Unit and stack numbering must correspond throughout the application package. If applying for a NOI under 20.2.73 NMAC, equipment exemptions under 2.72.202 NMAC do not apply.

Unit Number[1]	Source Description	Make	Model #	Serial #	Manufacturer's Rated Capacity[3] (Specify Units)	Requested Permitted Capacity[3] (Specify Units)	Date of Manufacture[2] / Date of Construction/ Reconstruction[2]	Controlled by Unit # / Emissions vented to Stack #	Source Classification Code (SCC)	For Each Piece of Equipment, Check One	RICE Ignition Type (CI, SI, 4SLB, 4SRB, 2SLB)[4]	Replacing Unit No.
AU3	Amine Unit 3	TBD	N/A	TBD	250 MMSCFD	250 MMSCFD	TBD TBD	TO3 TO3	31000305	☐ Existing (unchanged) ☐ To be Removed ☑ New/Additional ☐ Replacement Unit ☐ To Be Modified ☐ To be Replaced	N/A	N/A
GBS1	Gunbarrel Tank	Advance Tank	N/A	TBD	1,000 bbl	1,000 bbl	TBD TBD	ECD1 ECD1	31000506	☐ Existing (unchanged) ☐ To be Removed ☑ New/Additional ☐ Replacement Unit ☐ To Be Modified ☐ To be Replaced	N/A	N/A
OTK7	Slop Oil Tank	Advance Tank	N/A	TBD	500 bbl	500 bbl	TBD TBD	ECD1 ECD1	40400311	☐ Existing (unchanged) ☐ To be Removed ☑ New/Additional ☐ Replacement Unit ☐ To Be Modified ☐ To be Replaced	N/A	N/A
GEN1	Emergency Generator	Caterpillar	G3520H	TBD	3448 HP	3448 HP	TBD TBD	NA GEN1	20200254	☐ Existing (unchanged) ☐ To be Removed ☑ New/Additional ☐ Replacement Unit ☐ To Be Modified ☐ To be Replaced	4SLB	N/A
GEN2	Emergency Generator	Caterpillar	G3520H	TBD	3448 HP	3448 HP	TBD TBD	NA GEN2	20200254	☐ Existing (unchanged) ☐ To be Removed ☑ New/Additional ☐ Replacement Unit ☐ To Be Modified ☐ To be Replaced	4SLB	N/A
GEN3	Emergency Generator	Caterpillar	G3520H	TBD	3448 HP	3448 HP	TBD TBD	NA GEN3	20200254	☐ Existing (unchanged) ☐ To be Removed ☑ New/Additional ☐ Replacement Unit ☐ To Be Modified ☐ To be Replaced	4SLB	N/A
GEN4	Emergency Generator	Caterpillar	G3520H	TBD	3448 HP	3448 HP	TBD TBD	NA GEN4	20200254	☐ Existing (unchanged) ☐ To be Removed ☑ New/Additional ☐ Replacement Unit ☐ To Be Modified ☐ To be Replaced	4SLB	N/A
GEN5	Emergency Generator	Caterpillar	G3520H	TBD	3448 HP	3448 HP	TBD TBD	NA GEN5	20200254	☐ Existing (unchanged) ☐ To be Removed ☑ New/Additional ☐ Replacement Unit ☐ To Be Modified ☐ To be Replaced	4SLB	N/A
GEN6	Emergency Generator	Caterpillar	G3520H	TBD	3448 HP	3448 HP	TBD TBD	NA GEN6	20200254	☐ Existing (unchanged) ☐ To be Removed ☑ New/Additional ☐ Replacement Unit ☐ To Be Modified ☐ To be Replaced	4SLB	N/A
GEN7	Emergency Generator	Caterpillar	G3520H	TBD	3448 HP	3448 HP	TBD TBD	NA GEN7	20200254	☐ Existing (unchanged) ☐ To be Removed ☑ New/Additional ☐ Replacement Unit ☐ To Be Modified ☐ To be Replaced	4SLB	N/A
GEN8	Emergency Generator	Caterpillar	G3520H	TBD	3448 HP	3448 HP	TBD TBD	NA GEN8	20200254	☐ Existing (unchanged) ☐ To be Removed ☑ New/Additional ☐ Replacement Unit ☐ To Be Modified ☐ To be Replaced	4SLB	N/A

[1] Unit numbers must correspond to unit numbers in the previous NOI unless a complete cross reference table of all units in both NOIs is provided.

[2] Specify dates required to determine regulatory applicability.

[3] To properly account for power conversion efficiencies, generator set rated capacity shall be reported as the rated capacity of the engine in horsepower, not the kilowatt capacity of the generator set.

[4] "4SLB" means four stroke lean burn engine, "4SRB" means four stroke rich burn engine, "2SLB" means two stroke lean burn engine, "CI" means compression ignition, and "SI" means spark ignitio

Table 2-A: Regulated Emission Sources (4 TURBINES W/2 STABILIZERS)

Unit and stack numbering must correspond throughout the application package. Equipment exemptions under 2.72.202 NMAC do not apply to 20.2.73 NMAC. Identify process equipment that is used to reroute emissions back into the process or sales pipeline in Table 2-A, such as a VRU, VRT, ULPS, Flashing Vessel, or Blowcase.

Unit Number[1]	Source Description	Make	Model #	Serial #	Manufacturer's Rated Capacity[3] (Specify Units)	Requested Permitted Capacity[3] (Specify Units)	Date of Manufacture[2] / Date of Construction/ Reconstruction[2]	Controlled by Unit # / Emissions vented to Stack #	Source Classification Code (SCC)	For Each Piece of Equipment, Check One	RICE Ignition Type (CI, SI, 4SLB, 4SRB, 2SLB)[4]	Replacing Unit No.
SHTR1	Stabilization Hot Oil Heater (64.83 MMBtu/hr)	THM	N/A	TBD	64.83 MMBtu/hr	64.83 MMBtu/hr	TBD / TBD	NA / SHTR1	31000403	☐ Existing (unchanged) ☐ To be Removed ☑ New/Additional ☐ Replacement Unit ☐ To Be Modified ☐ To be Replaced	N/A	N/A
SHTR2	Stabilization Hot Oil Heater (64.83 MMBtu/hr)	THM	N/A	TBD	64.83 MMBtu/hr	64.83 MMBtu/hr	TBD / TBD	NA / SHTR2	31000403	☐ Existing (unchanged) ☐ To be Removed ☑ New/Additional ☐ Replacement Unit ☐ To Be Modified ☐ To be Replaced	N/A	N/A
RHTR1	Regen Heater (39.14 MMBtu/hr)	THM	N/A	TBD	39.14 MMBtu/hr	39.14 MMBtu/hr	TBD / TBD	NA / RHTR1	31000405	☐ Existing (unchanged) ☐ To be Removed ☑ New/Additional ☐ Replacement Unit ☐ To Be Modified ☐ To be Replaced	N/A	N/A
RHTR2	Regen Heater (39.14 MMBtu/hr)	THM	N/A	TBD	39.14 MMBtu/hr	39.14 MMBtu/hr	TBD / TBD	NA / RHTR2	31000405	☐ Existing (unchanged) ☐ To be Removed ☑ New/Additional ☐ Replacement Unit ☐ To Be Modified ☐ To be Replaced	N/A	N/A
RHTR3	Regen Heater (39.14 MMBtu/hr)	THM	N/A	TBD	39.14 MMBtu/hr	39.14 MMBtu/hr	TBD / TBD	NA / RHTR3	31000405	☐ Existing (unchanged) ☐ To be Removed ☑ New/Additional ☐ Replacement Unit ☐ To Be Modified ☐ To be Replaced	N/A	N/A
FL1	SSM/Emergency Flare 1 (Dual Tip Flare)	Zeeco, Inc.	N/A	TBD	250 MMscfd	250 MMscfd	TBD / TBD	NA / FL1	31000160	☐ Existing (unchanged) ☐ To be Removed ☑ New/Additional ☐ Replacement Unit ☐ To Be Modified ☐ To be Replaced	N/A	N/A
FL2	SSM/Emergency Flare 2 (Dual Tip Flare)	Zeeco, Inc.	N/A	TBD	250 MMscfd	250 MMscfd	TBD / TBD	NA / FL2	31000160	☐ Existing (unchanged) ☐ To be Removed ☑ New/Additional ☐ Replacement Unit ☐ To Be Modified ☐ To be Replaced	N/A	N/A
FL3	Backup SSM/Emergency Flare 3 (Dual Tip Flare)	Zeeco, Inc.	N/A	TBD	250 MMscfd	250 MMscfd	TBD / TBD	NA / FL3	31000160	☐ Existing (unchanged) ☐ To be Removed ☑ New/Additional ☐ Replacement Unit ☐ To Be Modified ☐ To be Replaced	N/A	N/A
FL1-FL3OVHD-SSM	FL1-FL3 Stabilizer Overhead SSM Gas	Zeeco, Inc.	N/A	TBD	1.2 MMscfd	1.2 MMscfd	TBD / TBD	FL1-FL3 / FL1-FL3OVHD-SSM	31000160	☐ Existing (unchanged) ☐ To be Removed ☑ New/Additional ☐ Replacement Unit ☐ To Be Modified ☐ To be Replaced	N/A	N/A
FL1-FL3CRYO-SSM	FL1-FL3 Cryo Blowdown SSM Gas	Zeeco, Inc.	N/A	TBD	0.375 MMscfd	0.375 MMscfd	TBD / TBD	FL1-FL3 / FL1-FL3CRYO-SSM	31000160	☐ Existing (unchanged) ☐ To be Removed ☑ New/Additional ☐ Replacement Unit ☐ To Be Modified ☐ To be Replaced	N/A	N/A
IFR1	Oil Storage 1 (100,000 bbl)	Advance Tank	N/A	TBD	100,000 bbl	100,000 bbl	TBD / TBD	NA / IFR1	40400331	☐ Existing (unchanged) ☐ To be Removed ☑ New/Additional ☐ Replacement Unit ☐ To Be Modified ☐ To be Replaced	N/A	N/A
IFR2	Oil Storage 2 (100,000 bbl)	Advance Tank	N/A	TBD	100,000 bbl	100,000 bbl	TBD / TBD	NA / IFR2	40400331	☐ Existing (unchanged) ☐ To be Removed ☑ New/Additional ☐ Replacement Unit ☐ To Be Modified ☐ To be Replaced	N/A	N/A

Table 2-A: Regulated Emission Sources (4 TURBINES W/2 STABILIZERS)

Unit and stack numbering must correspond throughout the application package. Equipment exemptions under 2.72.202 NMAC do not apply to 20.2.73 NMAC. Identify process equipment that is used to reroute emissions back into the process or sales pipeline in Table 2-A, such as a VRU, VRT, ULPS, Flashing Vessel, or Blowcase.

Unit Number[1]	Source Description	Make	Model #	Serial #	Manufacturer's Rated Capacity[3] (Specify Units)	Requested Permitted Capacity[3] (Specify Units)	Date of Manufacture[2] / Date of Construction/ Reconstruction[2]	Controlled by Unit # / Emissions vented to Stack #	Source Classification Code (SCC)	For Each Piece of Equipment, Check One	RICE Ignition Type (CI, SI, 4SLB, 4SRB, 2SLB)[4]	Replacing Unit No.
IFR3	Oil Storage 3 (100,000 bbl)	Advance Tank	N/A	TBD	100,000 bbl	100,000 bbl	TBD / TBD	NA / IFR3	40400331	☐ Existing (unchanged) ☐ To be Removed ☑ New/Additional ☐ Replacement Unit ☐ To Be Modified ☐ To be Replaced	N/A	N/A
IFR4	Oil Storage 4 (100,000 bbl)	Advance Tank	N/A	TBD	100,000 bbl	100,000 bbl	TBD / TBD	NA / IFR4	40400331	☐ Existing (unchanged) ☐ To be Removed ☑ New/Additional ☐ Replacement Unit ☐ To Be Modified ☐ To be Replaced	N/A	N/A
OTK1	3rd-Party Oil Storage 1	Advance Tank	N/A	TBD	2,000 bbl	2,000 bbl	TBD / TBD	ECD1 / ECD1	40400311	☐ Existing (unchanged) ☐ To be Removed ☑ New/Additional ☐ Replacement Unit ☐ To Be Modified ☐ To be Replaced	N/A	N/A
OTK2	3rd-Party Oil Storage 2	Advance Tank	N/A	TBD	2,000 bbl	2,000 bbl	TBD / TBD	ECD1 / ECD1	40400311	☐ Existing (unchanged) ☐ To be Removed ☑ New/Additional ☐ Replacement Unit ☐ To Be Modified ☐ To be Replaced	N/A	N/A
OTK3	3rd-Party Oil Storage 3	Advance Tank	N/A	TBD	2,000 bbl	2,000 bbl	TBD / TBD	ECD1 / ECD1	40400311	☐ Existing (unchanged) ☐ To be Removed ☑ New/Additional ☐ Replacement Unit ☐ To Be Modified ☐ To be Replaced	N/A	N/A
OTK4	3rd-Party Oil Storage 4	Advance Tank	N/A	TBD	2,000 bbl	2,000 bbl	TBD / TBD	ECD1 / ECD1	40400311	☐ Existing (unchanged) ☐ To be Removed ☑ New/Additional ☐ Replacement Unit ☐ To Be Modified ☐ To be Replaced	N/A	N/A
OTK5	3rd-Party Oil Storage 5	Advance Tank	N/A	TBD	2,000 bbl	2,000 bbl	TBD / TBD	ECD1 / ECD1	40400311	☐ Existing (unchanged) ☐ To be Removed ☑ New/Additional ☐ Replacement Unit ☐ To Be Modified ☐ To be Replaced	N/A	N/A
OTK6	3rd-Party Oil Storage 6	Advance Tank	N/A	TBD	2,000 bbl	2,000 bbl	TBD / TBD	ECD1 / ECD1	40400311	☐ Existing (unchanged) ☐ To be Removed ☑ New/Additional ☐ Replacement Unit ☐ To Be Modified ☐ To be Replaced	N/A	N/A
ECD1	Combustor	Zeeco, Inc.	N/A	TBD	N/A	N/A	TBD / TBD	NA / ECD1	31000209	☐ Existing (unchanged) ☐ To be Removed ☑ New/Additional ☐ Replacement Unit ☐ To Be Modified ☐ To be Replaced	N/A	N/A
TO1	Thermal Oxidizer	Zeeco, Inc.	N/A	TBD	31.5 MMBtu/hr	31.5 MMBtu/hr	TBD / TBD	NA / TO1	31000209	☐ Existing (unchanged) ☐ To be Removed ☑ New/Additional ☐ Replacement Unit ☐ To Be Modified ☐ To be Replaced	N/A	N/A
TO2	Thermal Oxidizer	Zeeco, Inc.	N/A	TBD	31.5 MMBtu/hr	31.5 MMBtu/hr	TBD / TBD	NA / TO2	31000209	☐ Existing (unchanged) ☐ To be Removed ☑ New/Additional ☐ Replacement Unit ☐ To Be Modified ☐ To be Replaced	N/A	N/A
TO3	Thermal Oxidizer	Zeeco, Inc.	N/A	TBD	31.5 MMBtu/hr	31.5 MMBtu/hr	TBD / TBD	NA / TO3	31000209	☐ Existing (unchanged) ☐ To be Removed ☑ New/Additional ☐ Replacement Unit ☐ To Be Modified ☐ To be Replaced	N/A	N/A
FUG	Fugitives	N/A	N/A	N/A	N/A	N/A	TBD / TBD	NA / FUG	31088811	☐ Existing (unchanged) ☐ To be Removed ☑ New/Additional ☐ Replacement Unit ☐ To Be Modified ☐ To be Replaced	N/A	N/A

Table 2-A: Regulated Emission Sources (4 TURBINES W/2 STABILIZERS)

Unit and stack numbering must correspond throughout the application package. Equipment exemptions under 2.72.202 NMAC do not apply to 20.2.73 NMAC. Identify process equipment that is used to reroute emissions back into the process or sales pipeline in Table 2-A, such as a VRU, VRT, ULPS, Flashing Vessel, or Blowcase.

Unit Number[1]	Source Description	Make	Model #	Serial #	Manufacturer's Rated Capacity[3] (Specify Units)	Requested Permitted Capacity[3] (Specify Units)	Date of Manufacture[2] / Date of Construction/ Reconstruction[2]	Controlled by Unit # / Emissions vented to Stack #	Source Classification Code (SCC)	For Each Piece of Equipment, Check One	RICE Ignition Type (CI, SI, 4SLB, 4SRB, 2SLB)[4]	Replacing Unit No.
SSM	Storage Tank SSM Emissions	N/A	N/A	N/A	N/A	N/A	TBD TBD	NA SSM	31088811	☐ Existing (unchanged) ☐ To be Removed ☑ New/Additional ☐ Replacement Unit ☐ To Be Modified ☐ To be Replaced	N/A	N/A
ROAD	Haul Road Fugitives	N/A	N/A	N/A	N/A	N/A	TBD TBD	NA ROAD	31088811	☐ Existing (unchanged) ☐ To be Removed ☑ New/Additional ☐ Replacement Unit ☐ To Be Modified ☐ To be Replaced	N/A	N/A
PWTK1	Produced Water Tank 1	TBD	N/A	TBD	750 bbl	750 bbl	TBD TBD	ECD1 ECD1	40400315	☐ Existing (unchanged) ☐ To be Removed ☑ New/Additional ☐ Replacement Unit ☐ To Be Modified ☐ To be Replaced	N/A	N/A
PWTK2	Produced Water Tank 2	TBD	N/A	TBD	750 bbl	750 bbl	TBD TBD	ECD1 ECD1	40400315	☐ Existing (unchanged) ☐ To be Removed ☑ New/Additional ☐ Replacement Unit ☐ To Be Modified ☐ To be Replaced	N/A	N/A
PWTL	Produced Water Loading	N/A	N/A	N/A	N/A	10,308 bbl/day	TBD TBD	NA PWTL	40400250	☐ Existing (unchanged) ☐ To be Removed ☑ New/Additional ☐ Replacement Unit ☐ To Be Modified ☐ To be Replaced	N/A	N/A
OTL	Slop Oil Loading	N/A	N/A	N/A	210 bbl/day	210 bbl/day	TBD TBD	NA OTL	40400250	☐ Existing (unchanged) ☐ To be Removed ☑ New/Additional ☐ Replacement Unit ☐ To Be Modified ☐ To be Replaced	N/A	N/A
AU1	Amine Unit 1	TBD	N/A	TBD	250 MMSCFD	250 MMSCFD	TBD TBD	TO1 TO1	31000305	☐ Existing (unchanged) ☐ To be Removed ☑ New/Additional ☐ Replacement Unit ☐ To Be Modified ☐ To be Replaced	N/A	N/A
AU2	Amine Unit 2	TBD	N/A	TBD	250 MMSCFD	250 MMSCFD	TBD TBD	TO2 TO2	31000305	☐ Existing (unchanged) ☐ To be Removed ☑ New/Additional ☐ Replacement Unit ☐ To Be Modified ☐ To be Replaced	N/A	N/A
AU3	Amine Unit 3	TBD	N/A	TBD	250 MMSCFD	250 MMSCFD	TBD TBD	TO3 TO3	31000305	☐ Existing (unchanged) ☐ To be Removed ☑ New/Additional ☐ Replacement Unit ☐ To Be Modified ☐ To be Replaced	N/A	N/A
GBS1	Gunbarrel Tank	Advance Tank	N/A	TBD	1,000 bbl	1,000 bbl	TBD TBD	ECD1 ECD1	31000506	☐ Existing (unchanged) ☐ To be Removed ☑ New/Additional ☐ Replacement Unit ☐ To Be Modified ☐ To be Replaced	N/A	N/A
OTK7	Slop Oil Tank	Advance Tank	N/A	TBD	500 bbl	500 bbl	TBD TBD	ECD1 ECD1	40400311	☐ Existing (unchanged) ☐ To be Removed ☑ New/Additional ☐ Replacement Unit ☐ To Be Modified ☐ To be Replaced	N/A	N/A
TUR1	Turbine	Mitsubishi	H-100	TBD	120 MW	120 MW	TBD TBD	CAT1 TUR1	20200203	☐ Existing (unchanged) ☐ To be Removed ☑ New/Additional ☐ Replacement Unit ☐ To Be Modified ☐ To be Replaced	N/A	N/A

Table 2-A: Regulated Emission Sources (4 TURBINES W/2 STABILIZERS)

Unit and stack numbering must correspond throughout the application package. Equipment exemptions under 2.72.202 NMAC do not apply to 20.2.73 NMAC. Identify process equipment that is used to reroute emissions back into the process or sales pipeline in Table 2-A, such as a VRU, VRT, ULPS, Flashing Vessel, or Blowcase.

Unit Number[1]	Source Description	Make	Model #	Serial #	Manufacturer's Rated Capacity[3] (Specify Units)	Requested Permitted Capacity[3] (Specify Units)	Date of Manufacture[2] / Date of Construction/ Reconstruction[2]	Controlled by Unit # / Emissions vented to Stack #	Source Classification Code (SCC)	For Each Piece of Equipment, Check One	RICE Ignition Type (CI, SI, 4SLB, 4SRB, 2SLB)[4]	Replacing Unit No.
TUR2	Turbine	Mitsubishi	H-100	TBD	120 MW	120 MW	TBD TBD	CAT2 TUR2	20200203	☐ Existing (unchanged) ☐ To be Removed ☑ New/Additional ☐ Replacement Unit ☐ To Be Modified ☐ To be Replaced	N/A	N/A
TUR3	Turbine	Mitsubishi	H-100	TBD	120 MW	120 MW	TBD TBD	CAT3 TUR3	20200203	☐ Existing (unchanged) ☐ To be Removed ☑ New/Additional ☐ Replacement Unit ☐ To Be Modified ☐ To be Replaced	N/A	N/A
TUR4	Turbine	Mitsubishi	H-100	TBD	120 MW	120 MW	TBD TBD	CAT4 TUR4	20200203	☐ Existing (unchanged) ☐ To be Removed ☑ New/Additional ☐ Replacement Unit ☐ To Be Modified ☐ To be Replaced	N/A	N/A
GEN1	Emergency Generator	Caterpillar	G3520H	TBD	3448 HP	3448 HP	TBD TBD	NA GEN1	20200254	☐ Existing (unchanged) ☐ To be Removed ☑ New/Additional ☐ Replacement Unit ☐ To Be Modified ☐ To be Replaced	N/A	N/A
GEN2	Emergency Generator	Caterpillar	G3520H	TBD	3448 HP	3448 HP	TBD TBD	NA GEN2	20200254	☐ Existing (unchanged) ☐ To be Removed ☑ New/Additional ☐ Replacement Unit ☐ To Be Modified ☐ To be Replaced	N/A	N/A
GEN3	Emergency Generator	Caterpillar	G3520H	TBD	3448 HP	3448 HP	TBD TBD	NA GEN3	20200254	☐ Existing (unchanged) ☐ To be Removed ☑ New/Additional ☐ Replacement Unit ☐ To Be Modified ☐ To be Replaced	N/A	N/A
GEN4	Emergency Generator	Caterpillar	G3520H	TBD	3448 HP	3448 HP	TBD TBD	NA GEN4	20200254	☐ Existing (unchanged) ☐ To be Removed ☑ New/Additional ☐ Replacement Unit ☐ To Be Modified ☐ To be Replaced	N/A	N/A
GEN5	Emergency Generator	Caterpillar	G3520H	TBD	3448 HP	3448 HP	TBD TBD	NA GEN5	20200254	☐ Existing (unchanged) ☐ To be Removed ☑ New/Additional ☐ Replacement Unit ☐ To Be Modified ☐ To be Replaced	N/A	N/A
GEN6	Emergency Generator	Caterpillar	G3520H	TBD	3448 HP	3448 HP	TBD TBD	NA GEN6	20200254	☐ Existing (unchanged) ☐ To be Removed ☑ New/Additional ☐ Replacement Unit ☐ To Be Modified ☐ To be Replaced	N/A	N/A
GEN7	Emergency Generator	Caterpillar	G3520H	TBD	3448 HP	3448 HP	TBD TBD	NA GEN7	20200254	☐ Existing (unchanged) ☐ To be Removed ☑ New/Additional ☐ Replacement Unit ☐ To Be Modified ☐ To be Replaced	N/A	N/A
GEN8	Emergency Generator	Caterpillar	G3520H	TBD	3448 HP	3448 HP	TBD TBD	NA GEN8	20200254	☐ Existing (unchanged) ☐ To be Removed ☑ New/Additional ☐ Replacement Unit ☐ To Be Modified ☐ To be Replaced	N/A	N/A

[1] Unit numbers must correspond to unit numbers in the previous NOI unless a complete cross reference table of all units in both NOIs is provided.

[2] Specify dates required to determine regulatory applicability.

[3] To properly account for power conversion efficiencies, generator set rated capacity shall be reported as the rated capacity of the engine in horsepower, not the kilowatt capacity of the generator set.

[4] "4SLB" means four stroke lean burn engine, "4SRB" means four stroke rich burn engine, "2SLB" means two stroke lean burn engine, "CI" means compression ignition, and "SI" means spark ignitio

Table 2-B: Insignificant Activities[1] (20.2.70 NMAC) OR Exempted Equipment (20.2.72 NMAC)

All 20.2.70 NMAC (Title V) applications must list all Insignificant Activities in this table. All 20.2.72 NMAC applications must list Exempted Equipment in this table. If equipment listed on this table is exempt under 20.2.72.202.B.5, include emissions calculations and emissions totals for 202.B.5 "similar functions" units, operations, and activities in Section 6, Calculations. Equipment and activities exempted under 20.2.72.202 NMAC may not necessarily be Insignificant under 20.2.70 NMAC (and vice versa). Unit & stack numbering must be consistent throughout the application package. Per Exemptions Policy 02-012.00 (see http://www.env.nm.gov/aqb/permit/aqb_pol.html), 20.2.72.202.B NMAC Exemptions do not apply, but 20.2.72.202.A NMAC exemptions do apply to NOI facilities under 20.2.73 NMAC. List 20.2.72.301.D.4 NMAC Auxiliary Equipment for Streamline applications in Table 2-A. The List of Insignificant Activities (for TV) can be found online at http://www.env.nm.gov/aqb/forms/InsignificantListTitleV.pdf . TV sources may elect to enter both TV Insignificant Activities and Part 72 Exemptions on this form.

Unit Number	Source Description	Manufacturer	Model No. / Serial No.	Max Capacity / Capacity Units	List Specific 20.2.72.202 NMAC Exemption (e.g. 20.2.72.202.B.5) / Insignificant Activity citation (e.g. IA List Item #1.a)	Date of Manufacture /Reconstruction[2] / Date of Installation /Construction[2]	For Each Piece of Equipment, Check Onc
LOV1	Turbine Lube Oil Vent	Mitsubishi	N/A N/A	N/A N/A	20.2.72.202.B.5 Units with PTE < 0.5 tpy	TBD TBD	☐ Existing (unchanged) ☐ To be Removed ☑ New/Additional ☐ Replacement Unit ☐ To Be Modified ☐ To be Replaced
LOV2	Turbine Lube Oil Vent	Mitsubishi	N/A N/A	N/A N/A	20.2.72.202.B.5 Units with PTE < 0.5 tpy	TBD TBD	☐ Existing (unchanged) ☐ To be Removed ☑ New/Additional ☐ Replacement Unit ☐ To Be Modified ☐ To be Replaced
LOV3	Turbine Lube Oil Vent	Mitsubishi	N/A N/A	N/A N/A	20.2.72.202.B.5 Units with PTE < 0.5 tpy	TBD TBD	☐ Existing (unchanged) ☐ To be Removed ☑ New/Additional ☐ Replacement Unit ☐ To Be Modified ☐ To be Replaced
LOV4	Turbine Lube Oil Vent	Mitsubishi	N/A N/A	N/A N/A	20.2.72.202.B.5 Units with PTE < 0.5 tpy	TBD TBD	☐ Existing (unchanged) ☐ To be Removed ☑ New/Additional ☐ Replacement Unit ☐ To Be Modified ☐ To be Replaced
TK5001	Thermal Fluid Surge Tank (Nitrogen and Trace VOC)	TBD	N/A N/A	N/A N/A	20.2.72.202.B.5 Units with PTE < 0.5 tpy	TBD TBD	☐ Existing (unchanged) ☐ To be Removed ☑ New/Additional ☐ Replacement Unit ☐ To Be Modified ☐ To be Replaced
TK5002	Thermal Fluid Surge Tank (Nitrogen and Trace VOC)	TBD	N/A N/A	N/A N/A	20.2.72.202.B.5 Units with PTE < 0.5 tpy	TBD TBD	☐ Existing (unchanged) ☐ To be Removed ☑ New/Additional ☐ Replacement Unit ☐ To Be Modified ☐ To be Replaced
40A	1000 bbl Demin Water Tank	TBD	N/A N/A	N/A N/A	Not a source of regulated emissions 	TBD TBD	☐ Existing (unchanged) ☐ To be Removed ☑ New/Additional ☐ Replacement Unit ☐ To Be Modified ☐ To be Replaced
40B	1000 bbl Raw Water Tank	TBD	N/A N/A	N/A N/A	Not a source of regulated emissions 	TBD TBD	☐ Existing (unchanged) ☐ To be Removed ☑ New/Additional ☐ Replacement Unit ☐ To Be Modified ☐ To be Replaced
78A	1000 bbl Raw Water Tank	TBD	N/A N/A	N/A N/A	Not a source of regulated emissions 	TBD TBD	☐ Existing (unchanged) ☐ To be Removed ☑ New/Additional ☐ Replacement Unit ☐ To Be Modified ☐ To be Replaced
78B	1000 bbl Raw Water Tank	TBD	N/A N/A	N/A N/A	Not a source of regulated emissions 	TBD TBD	☐ Existing (unchanged) ☐ To be Removed ☑ New/Additional ☐ Replacement Unit ☐ To Be Modified ☐ To be Replaced
77	1000 bbl Firefighting Foam Tank	TBD	N/A N/A	N/A N/A	Not a source of regulated emissions 	TBD TBD	☐ Existing (unchanged) ☐ To be Removed ☑ New/Additional ☐ Replacement Unit ☐ To Be Modified ☐ To be Replaced
70	100 bbl Lube Oil Tank	TBD	N/A N/A	N/A N/A	20.2.72.202.B.5 Units with PTE < 0.5 tpy	TBD TBD	☐ Existing (unchanged) ☐ To be Removed ☑ New/Additional ☐ Replacement Unit ☐ To Be Modified ☐ To be Replaced

Table 2-B: Insignificant Activities[1] (20.2.70 NMAC) OR Exempted Equipment (20.2.72 NMAC)

All 20.2.70 NMAC (Title V) applications must list all Insignificant Activities in this table. All 20.2.72 NMAC applications must list Exempted Equipment in this table. If equipment listed on this table is exempt under 20.2.72.202.B.5, include emissions calculations and emissions totals for 202.B.5 "similar functions" units, operations, and activities in Section 6, Calculations. Equipment and activities exempted under 20.2.72.202 NMAC may not necessarily be Insignificant under 20.2.70 NMAC (and vice versa). Unit & stack numbering must be consistent throughout the application package. Per Exemptions Policy 02-012.00 (see http://www.env.nm.gov/aqb/permit/aqb_pol.html), 20.2.72.202.B NMAC Exemptions do not apply, but 20.2.72.202.A NMAC exemptions do apply to NOI facilities under 20.2.73 NMAC. List 20.2.72.301.D.4 NMAC Auxiliary Equipment for Streamline applications in Table 2-A. The List of Insignificant Activities (for TV) can be found online at http://www.env.nm.gov/aqb/forms/InsignificantListTitleV.pdf . TV sources may elect to enter both TV Insignificant Activities and Part 72 Exemptions on this form.

Unit Number	Source Description	Manufacturer	Model No. / Serial No.	Max Capacity / Capacity Units	List Specific 20.2.72.202 NMAC Exemption (e.g. 20.2.72.202.B.5) / Insignificant Activity citation (e.g. IA List Item #1.a)	Date of Manufacture /Reconstruction[2] / Date of Installation /Construction[2]	For Each Piece of Equipment, Check Onc
71	100 bbl Lube Oil Tank	TBD	N/A N/A	N/A N/A	20.2.72.202.B.5 Units with PTE < 0.5 tpy	TBD TBD	☐ Existing (unchanged) ☐ To be Removed ☑ New/Additional ☐ Replacement Unit ☐ To Be Modified ☐ To be Replaced
72	100 bbl Lube Oil Tank	TBD	N/A N/A	N/A N/A	20.2.72.202.B.5 Units with PTE < 0.5 tpy	TBD TBD	☐ Existing (unchanged) ☐ To be Removed ☑ New/Additional ☐ Replacement Unit ☐ To Be Modified ☐ To be Replaced
41	Amine Makeup Tank	TBD	N/A N/A	N/A N/A	Not a source of regulated emissions 	TBD TBD	☐ Existing (unchanged) ☐ To be Removed ☑ New/Additional ☐ Replacement Unit ☐ To Be Modified ☐ To be Replaced
39	Utility Water Tank	TBD	N/A N/A	N/A N/A	Not a source of regulated emissions 	TBD TBD	☐ Existing (unchanged) ☐ To be Removed ☑ New/Additional ☐ Replacement Unit ☐ To Be Modified ☐ To be Replaced
40	Water Makeup Tank	TBD	N/A N/A	N/A N/A	Not a source of regulated emissions 	TBD TBD	☐ Existing (unchanged) ☐ To be Removed ☑ New/Additional ☐ Replacement Unit ☐ To Be Modified ☐ To be Replaced
41	Utility Water Tank	TBD	N/A N/A	N/A N/A	Not a source of regulated emissions 	TBD TBD	☐ Existing (unchanged) ☐ To be Removed ☑ New/Additional ☐ Replacement Unit ☐ To Be Modified ☐ To be Replaced
EREGCOMP1 - EREGCOMP3	Electric Regen Gas Compressors	TBD	N/A N/A	N/A N/A	Not a source of regulated emissions 	TBD TBD	☐ Existing (unchanged) ☐ To be Removed ☑ New/Additional ☐ Replacement Unit ☐ To Be Modified ☐ To be Replaced
EREFCOMP1 - EREFCOMP3	Electric Refrigeration Gas Compressors	TBD	N/A N/A	N/A N/A	Not a source of regulated emissions 	TBD TBD	☐ Existing (unchanged) ☐ To be Removed ☑ New/Additional ☐ Replacement Unit ☐ To Be Modified ☐ To be Replaced
ESTCOMP1 - ESTCOMP17	Electric Oil/Condensate Stabilizer Gas Compressors	TBD	N/A N/A	N/A N/A	Not a source of regulated emissions 	TBD TBD	☐ Existing (unchanged) ☐ To be Removed ☑ New/Additional ☐ Replacement Unit ☐ To Be Modified ☐ To be Replaced
ERESCOMP1 - ERESCOMP5	Electric Residue Gas Compressors	TBD	N/A N/A	N/A N/A	Not a source of regulated emissions 	TBD TBD	☐ Existing (unchanged) ☐ To be Removed ☑ New/Additional ☐ Replacement Unit ☐ To Be Modified ☐ To be Replaced
EIACOMP1 - EIACOMP5	Electric Instrument Air Compressors	TBD	N/A N/A	N/A N/A	Not a source of regulated emissions 	TBD TBD	☐ Existing (unchanged) ☐ To be Removed ☑ New/Additional ☐ Replacement Unit ☐ To Be Modified ☐ To be Replaced

[1] Insignificant activities exempted due to size or production rate are defined in 20.2.70.300.D.6, 20.2.70.7.Q NMAC, and the NMED/AQB List of Insignificant Activities, dated September 15, 2008. Emissions from these insignificant activities do not need to be reported, unless specifically requested.

[2] Specify date(s) required to determine regulatory applicability.

Table 2-C: Emissions Control Equipment

Unit and stack numbering must correspond throughout the application package. Only list control equipment for TAPs if the TAP's maximum uncontrolled emissions rate is over its respective threshold as listed in 20.2.72 NMAC, Subpart V, Tables A and B. In accordance with 20.2.72.203.A(3) and (8) NMAC, 20.2.70.300.D(5)(b) and (e) NMAC, and 20.2.73.200.B(7) NMAC, the permittee shall report all control devices and list each pollutant controlled by the control device regardless if the applicant takes credit for the reduction in emissions.

Control Equipment Unit No.	Control Equipment Description	Date Installed	Controlled Pollutant(s)	Controlling Emissions for Unit Number(s)[1]	Efficiency (% Control by Weight)	Method used to Estimate Efficiency
FL1	Flare 1	TBD	VOC, HAP	Plant Inlet & SSM Activities	98%	Mnf. Guarantee
FL2	Flare 2	TBD	VOC, HAP	Plant Inlet & SSM Activities	98%	Mnf. Guarantee
FL3	Flare 3	TBD	VOC, HAP	Plant Inlet & SSM Activities	98%	Mnf. Guarantee
ECD1	Combustor	TBD	VOC, HAP	OTK1-OTK7, PWTK1-PWTK2, OTL	99%	Mnf. Guarantee
TO1	Thermal Oxidizer	TBD	VOC, HAP	AU1	99%	Mnf. Guarantee
TO2	Thermal Oxidizer	TBD	VOC, HAP	AU2	99%	Mnf. Guarantee
TO3	Thermal Oxidizer	TBD	VOC, HAP	AU3	99%	Mnf. Guarantee
CAT1	Catalytic Reduction	TBD	CO, VOC, HAP	CAT1	VOC/HAP - 37%, HCOH - 63%	Mnf. Guarantee
CAT2	Catalytic Reduction	TBD	CO, VOC, HAP	CAT2	VOC/HAP - 37%, HCOH - 63%	Mnf. Guarantee
CAT3	Catalytic Reduction	TBD	CO, VOC, HAP	CAT3	VOC/HAP - 37%, HCOH - 63%	Mnf. Guarantee
CAT4	Catalytic Reduction	TBD	CO, VOC, HAP	CAT4	VOC/HAP - 37%, HCOH - 63%	Mnf. Guarantee

[1] List each control device on a separate line. For each control device, list all emission units controlled by the control device.

Table 2-D: Maximum Emissions (under normal operating conditions) - WITH COGENERATION

Maximum Emissions are the emissions at maximum capacity and prior to (in the absence of) pollution control, emission-reducing process equipment, or any other emission reduction. Calculate the hourly emissions using the worst case hourly emissi for each pollutant. For each pollutant, calculate the annual emissions as if the facility were operating at maximum plant capacity without pollution controls for 8760 hours per year, unless otherwise approved by the Department. List Hazardous Air Pollutants (HAP) & Toxic Air Pollutants (TAPs) in Table 2-I. Unit & stack numbering must be consistent throughout the application package. Fill all cells in this table with the emission numbers or a "-" symbol. A "-" symbol indicates that emissions of this pollutant are not expected. Numbers shall be expressed to at least 2 decimal points (e.g. 0.41, 1.41, or 1.41E-4).

Unit No.	NOx		CO		VOC		SOx		PM[1]		PM10[2]		PM2.5[2]		H_2S		Lead	
	lb/hr	ton/yr	lb/hr	ton/yr	lb/hr	ton/yr	lb/hr	ton/yr	lb/hr	ton/yr	lb/hr	ton/yr	lb/hr	ton/yr	lb/hr	ton/yr	lb/hr	ton/yr
SHTR1	1.73	7.58	1.06	4.63	0.41	1.82	0.14	0.63	0.48	2.12	0.48	2.12	0.48	2.12	-	-	-	-
SHTR2	1.73	7.58	1.06	4.63	0.41	1.82	0.14	0.63	0.48	2.12	0.48	2.12	0.48	2.12	-	-	-	-
RHTR1	1.05	4.58	0.64	2.79	0.25	1.10	0.09	0.38	0.29	1.28	0.29	1.28	0.29	1.28	-	-	-	-
RHTR2	1.05	4.58	0.64	2.79	0.25	1.10	0.09	0.38	0.29	1.28	0.29	1.28	0.29	1.28	-	-	-	-
RHTR3	1.05	4.58	0.64	2.79	0.25	1.10	0.09	0.38	0.29	1.28	0.29	1.28	0.29	1.28	-	-	-	-
FL1	Not operating in uncontrolled emissions scenario.																	
FL2	Not operating in uncontrolled emissions scenario.																	
FL3	Not operating in uncontrolled emissions scenario.																	
IFR1	-	-	-	-	1.18	5.15	-	-	-	-	-	-	-	-	-	-	-	-
IFR2	-	-	-	-	1.18	5.15	-	-	-	-	-	-	-	-	-	-	-	-
IFR3	-	-	-	-	1.18	5.15	-	-	-	-	-	-	-	-	-	-	-	-
IFR4	-	-	-	-	1.18	5.15	-	-	-	-	-	-	-	-	-	-	-	-
OTK1	-	-	-	-	25.09	109.91	-	-	-	-	-	-	-	-	-	-	-	-
OTK2	-	-	-	-	25.09	109.91	-	-	-	-	-	-	-	-	-	-	-	-
OTK3	-	-	-	-	25.09	109.91	-	-	-	-	-	-	-	-	-	-	-	-
OTK4	-	-	-	-	25.09	109.91	-	-	-	-	-	-	-	-	-	-	-	-
OTK5	-	-	-	-	25.09	109.91	-	-	-	-	-	-	-	-	-	-	-	-
OTK6	-	-	-	-	25.09	109.91	-	-	-	-	-	-	-	-	-	-	-	-
ECD1	Not operating in uncontrolled emissions scenario.																	
TO1	Not operating in uncontrolled emissions scenario.																	
TO2	Not operating in uncontrolled emissions scenario.																	
TO3	Not operating in uncontrolled emissions scenario.																	
FUG	-	-	-	-	88.64	388.24	-	-	-	-	-	-	-	-	-	-	-	-
SSM	-	-	-	-	-	10.00	-	-	-	-	-	-	-	-	-	-	-	-
ROAD	-	-	-	-	-	-	-	-	2.76	8.83	0.70	2.25	0.07	0.22	-	-	-	-
PWTK1	-	-	-	-	0.00	0.01	-	-	-	-	-	-	-	-	-	-	-	-

Table 2-D: Maximum Emissions (under normal operating conditions) - WITH COGENERATION

Maximum Emissions are the emissions at maximum capacity and prior to (in the absence of) pollution control, emission-reducing process equipment, or any other emission reduction. Calculate the hourly emissions using the worst case hourly emissi for each pollutant. For each pollutant, calculate the annual emissions as if the facility were operating at maximum plant capacity without pollution controls for 8760 hours per year, unless otherwise approved by the Department. List Hazardous Air Pollutants (HAP) & Toxic Air Pollutants (TAPs) in Table 2-I. Unit & stack numbering must be consistent throughout the application package. Fill all cells in this table with the emission numbers or a "-" symbol. A "-" symbol indicates that emissions of this pollutant are not expected. Numbers shall be expressed to at least 2 decimal points (e.g. 0.41, 1.41, or 1.41E-4).

Unit No.	NOx		CO		VOC		SOx		PM[1]		PM10[2]		PM2.5[2]		H_2S		Lead	
	lb/hr	ton/yr	lb/hr	ton/yr	lb/hr	ton/yr	lb/hr	ton/yr	lb/hr	ton/yr	lb/hr	ton/yr	lb/hr	ton/yr	lb/hr	ton/yr	lb/hr	ton/yr
PWTK2	-	-	-	-	0.00	0.01	-	-	-	-	-	-	-	-	-	-	-	-
PWTL	-	-	-	-	0.39	2.49	-	-	-	-	-	-	-	-	-	-	-	-
OTL	-	-	-	-	54.47	10.32	-	-	-	-	-	-	-	-	-	-	-	-
AU1	-	-	-	-	62.46	273.55	-	-	-	-	-	-	-	-	-	-	-	-
AU2	-	-	-	-	62.46	273.55	-	-	-	-	-	-	-	-	-	-	-	-
AU3	-	-	-	-	62.46	273.55	-	-	-	-	-	-	-	-	-	-	-	-
GBS1	-	-	-	-	229.81	1006.55	-	-	-	-	-	-	-	-	-	-	-	-
OTK7	-	-	-	-	23.21	101.64	-	-	-	-	-	-	-	-	-	-	-	-
TUR1	51.40	225.13	35.10	153.74	14.40	63.07	2.14	9.35	9.20	40.30	9.20	40.30	9.20	40.30	-	-	-	-
TUR2	51.40	225.13	35.10	153.74	14.40	63.07	2.14	9.35	9.20	40.30	9.20	40.30	9.20	40.30	-	-	-	-
TUR3	51.40	225.13	35.10	153.74	14.40	63.07	2.14	9.35	9.20	40.30	9.20	40.30	9.20	40.30	-	-	-	-
TUR4	51.40	225.13	35.10	153.74	14.40	63.07	2.14	9.35	9.20	40.30	9.20	40.30	9.20	40.30	-	-	-	-
GEN1	7.60	0.38	12.77	0.64	4.89	0.24	0.05	0.00	0.21	0.01	0.21	0.01	0.21	0.01	-	-	-	-
GEN2	7.60	0.38	12.77	0.64	4.89	0.24	0.05	0.00	0.21	0.01	0.21	0.01	0.21	0.01	-	-	-	-
GEN3	7.60	0.38	12.77	0.64	4.89	0.24	0.05	0.00	0.21	0.01	0.21	0.01	0.21	0.01	-	-	-	-
GEN4	7.60	0.38	12.77	0.64	4.89	0.24	0.05	0.00	0.21	0.01	0.21	0.01	0.21	0.01	-	-	-	-
GEN5	7.60	0.38	12.77	0.64	4.89	0.24	0.05	0.00	0.21	0.01	0.21	0.01	0.21	0.01	-	-	-	-
GEN6	7.60	0.38	12.77	0.64	4.89	0.24	0.05	0.00	0.21	0.01	0.21	0.01	0.21	0.01	-	-	-	-
GEN7	7.60	0.38	12.77	0.64	4.89	0.24	0.05	0.00	0.21	0.01	0.21	0.01	0.21	0.01	-	-	-	-
GEN8	7.60	0.38	12.77	0.64	4.89	0.24	0.05	0.00	0.21	0.01	0.21	0.01	0.21	0.01	-	-	-	-
Totals	273.01	932.46	246.59	637.70	837.44	3281.17	9.51	39.81	43.08	178.16	41.03	171.58	40.39	169.56	-	-	-	-

[1]**Condensable Particulate Matter:** Include condensable particulate matter emissions for PM10 and PM2.5 if the source is a combustion source. Do not include condensable particulate matter for PM unless PM is set equal to PM10 and PM2.5. Particulate matter (PM) is not subject to an ambient air quality standard, but PM is a regulated air pollutant under PSD (20.2.74 NMAC) and Title V (20.2.70 NMAC).

Table 2-D: Maximum Emissions (under normal operating conditions) - WITHOUT COGENERATION

Maximum Emissions are the emissions at maximum capacity and prior to (in the absence of) pollution control, emission-reducing process equipment, or any other emission reduction. Calculate the hourly emissions using the worst case hourly emissions for each pollutant. For each pollutant, calculate the annual emissions as if the facility were operating at maximum plant capacity without pollution controls for 8760 hours per year, unless otherwise approved by the Department. List Hazardous Air Pollutants (HAP) & Toxic Air Pollutants (TAPs) in Table 2-I. Unit & stack numbering must be consistent throughout the application package. Fill all cells in this table with the emission numbers or a "-" symbol. A "-" symbol indicates that emissions of this pollutant are not expected. Numbers shall be expressed to at least 2 decimal points (e.g. 0.41, 1.41, or 1.41E-4).

Unit No.	NOx		CO		VOC		SOx		PM[1]		PM10[2]		PM2.5[2]		H_2S		Lead	
	lb/hr	ton/yr	lb/hr	ton/yr	lb/hr	ton/yr	lb/hr	ton/yr	lb/hr	ton/yr	lb/hr	ton/yr	lb/hr	ton/yr	lb/hr	ton/yr	lb/hr	ton/yr
SHTR1	1.73	7.58	1.06	4.63	0.41	1.82	0.14	0.63	0.48	2.12	0.48	2.12	0.48	2.12	-	-	-	-
SHTR2	1.73	7.58	1.06	4.63	0.41	1.82	0.14	0.63	0.48	2.12	0.48	2.12	0.48	2.12	-	-	-	-
SHTR3	1.73	7.58	1.06	4.63	0.41	1.82	0.14	0.63	0.48	2.12	0.48	2.12	0.48	2.12	-	-	-	-
SHTR4	1.73	7.58	1.06	4.63	0.41	1.82	0.14	0.63	0.48	2.12	0.48	2.12	0.48	2.12	-	-	-	-
SHTR5	1.73	7.58	1.06	4.63	0.41	1.82	0.14	0.63	0.48	2.12	0.48	2.12	0.48	2.12	-	-	-	-
SHTR6	1.73	7.58	1.06	4.63	0.41	1.82	0.14	0.63	0.48	2.12	0.48	2.12	0.48	2.12	-	-	-	-
SHTR7	1.73	7.58	1.06	4.63	0.41	1.82	0.14	0.63	0.48	2.12	0.48	2.12	0.48	2.12	-	-	-	-
SHTR8	1.73	7.58	1.06	4.63	0.41	1.82	0.14	0.63	0.48	2.12	0.48	2.12	0.48	2.12	-	-	-	-
SHTR9	1.73	7.58	1.06	4.63	0.41	1.82	0.14	0.63	0.48	2.12	0.48	2.12	0.48	2.12	-	-	-	-
SHTR10	1.73	7.58	1.06	4.63	0.41	1.82	0.14	0.63	0.48	2.12	0.48	2.12	0.48	2.12	-	-	-	-
SHTR11	1.73	7.58	1.06	4.63	0.41	1.82	0.14	0.63	0.48	2.12	0.48	2.12	0.48	2.12	-	-	-	-
SHTR12	1.73	7.58	1.06	4.63	0.41	1.82	0.14	0.63	0.48	2.12	0.48	2.12	0.48	2.12	-	-	-	-
CHTR1	3.47	15.21	1.70	7.42	0.67	2.92	0.23	1.00	0.77	3.39	0.77	3.39	0.77	3.39	-	-	-	-
CHTR2	3.47	15.21	1.70	7.42	0.67	2.92	0.23	1.00	0.77	3.39	0.77	3.39	0.77	3.39	-	-	-	-
CHTR3	3.47	15.21	1.70	7.42	0.67	2.92	0.23	1.00	0.77	3.39	0.77	3.39	0.77	3.39	-	-	-	-
RHTR1	1.05	4.58	0.64	2.79	0.25	1.10	0.09	0.38	0.29	1.28	0.29	1.28	0.29	1.28	-	-	-	-
RHTR2	1.05	4.58	0.64	2.79	0.25	1.10	0.09	0.38	0.29	1.28	0.29	1.28	0.29	1.28	-	-	-	-
RHTR3	1.05	4.58	0.64	2.79	0.25	1.10	0.09	0.38	0.29	1.28	0.29	1.28	0.29	1.28	-	-	-	-
FL1	Not operating in uncontrolled emissions scenario.																	
FL2	Not operating in uncontrolled emissions scenario.																	
FL3	Not operating in uncontrolled emissions scenario.																	
IFR1	-	-	-	-	1.18	5.15	-	-	-	-	-	-	-	-	-	-	-	-
IFR2	-	-	-	-	1.18	5.15	-	-	-	-	-	-	-	-	-	-	-	-
IFR3	-	-	-	-	1.18	5.15	-	-	-	-	-	-	-	-	-	-	-	-
IFR4	-	-	-	-	1.18	5.15	-	-	-	-	-	-	-	-	-	-	-	-
OTK1	-	-	-	-	25.09	109.91	-	-	-	-	-	-	-	-	-	-	-	-
OTK2	-	-	-	-	25.09	109.91	-	-	-	-	-	-	-	-	-	-	-	-

Table 2-D: Maximum Emissions (under normal operating conditions) - WITHOUT COGENERATION

Maximum Emissions are the emissions at maximum capacity and prior to (in the absence of) pollution control, emission-reducing process equipment, or any other emission reduction. Calculate the hourly emissions using the worst case hourly emissions for each pollutant. For each pollutant, calculate the annual emissions as if the facility were operating at maximum plant capacity without pollution controls for 8760 hours per year, unless otherwise approved by the Department. List Hazardous Air Pollutants (HAP) & Toxic Air Pollutants (TAPs) in Table 2-I. Unit & stack numbering must be consistent throughout the application package. Fill all cells in this table with the emission numbers or a "-" symbol. A "-" symbol indicates that emissions of this pollutant are not expected. Numbers shall be expressed to at least 2 decimal points (e.g. 0.41, 1.41, or 1.41E-4).

Unit No.	NOx		CO		VOC		SOx		PM[1]		PM10[2]		PM2.5[2]		H_2S		Lead	
	lb/hr	ton/yr	lb/hr	ton/yr	lb/hr	ton/yr	lb/hr	ton/yr	lb/hr	ton/yr	lb/hr	ton/yr	lb/hr	ton/yr	lb/hr	ton/yr	lb/hr	ton/yr
OTK3	-	-	-	-	25.09	109.91	-	-	-	-	-	-	-	-	-	-	-	-
OTK4	-	-	-	-	25.09	109.91	-	-	-	-	-	-	-	-	-	-	-	-
OTK5	-	-	-	-	25.09	109.91	-	-	-	-	-	-	-	-	-	-	-	-
OTK6	-	-	-	-	25.09	109.91	-	-	-	-	-	-	-	-	-	-	-	-
ECD1	Not operating in uncontrolled emissions scenario.																	
TO1	Not operating in uncontrolled emissions scenario.																	
TO2	Not operating in uncontrolled emissions scenario.																	
TO3	Not operating in uncontrolled emissions scenario.																	
FUG	-	-	-	-	88.64	388.24	-	-	-	-	-	-	-	-	-	-	-	-
SSM	-	-	-	-	-	10.00	-	-	-	-	-	-	-	-	-	-	-	-
ROAD	-	-	-	-	-	-	-	-	2.76	8.83	0.70	2.25	0.07	1.31	-	-	-	-
PWTK1	-	-	-	-	0.00	0.01	-	-	-	-	-	-	-	-	-	-	-	-
PWTK2	-	-	-	-	0.00	0.01	-	-	-	-	-	-	-	-	-	-	-	-
PWTL	-	-	-	-	0.39	2.49	-	-	-	-	-	-	-	-	-	-	-	-
OTL	-	-	-	-	54.47	10.32	-	-	-	-	-	-	-	-	-	-	-	-
AU1	-	-	-	-	62.46	273.55	-	-	-	-	-	-	-	-	-	-	-	-
AU2	-	-	-	-	62.46	273.55	-	-	-	-	-	-	-	-	-	-	-	-
AU3	-	-	-	-	62.46	273.55	-	-	-	-	-	-	-	-	-	-	-	-
GBS1	-	-	-	-	229.81	1006.55	-	-	-	-	-	-	-	-	-	-	-	-
OTK7	-	-	-	-	23.21	101.64	-	-	-	-	-	-	-	-	-	-	-	-
GEN1	7.60	0.38	12.77	0.64	4.89	0.24	0.05	0.00	0.21	0.01	0.21	0.01	0.21	0.01	-	-	-	-
GEN2	7.60	0.38	12.77	0.64	4.89	0.24	0.05	0.00	0.21	0.01	0.21	0.01	0.21	0.01	-	-	-	-
GEN3	7.60	0.38	12.77	0.64	4.89	0.24	0.05	0.00	0.21	0.01	0.21	0.01	0.21	0.01	-	-	-	-
GEN4	7.60	0.38	12.77	0.64	4.89	0.24	0.05	0.00	0.21	0.01	0.21	0.01	0.21	0.01	-	-	-	-
GEN5	7.60	0.38	12.77	0.64	4.89	0.24	0.05	0.00	0.21	0.01	0.21	0.01	0.21	0.01	-	-	-	-
GEN6	7.60	0.38	12.77	0.64	4.89	0.24	0.05	0.00	0.21	0.01	0.21	0.01	0.21	0.01	-	-	-	-
GEN7	7.60	0.38	12.77	0.64	4.89	0.24	0.05	0.00	0.21	0.01	0.21	0.01	0.21	0.01	-	-	-	-
GEN8	7.60	0.38	12.77	0.64	4.89	0.24	0.05	0.00	0.21	0.01	0.21	0.01	0.21	0.01	-	-	-	-
Totals	95.14	153.39	121.84	91.31	785.98	3055.80	3.08	11.69	13.43	48.31	11.38	41.74	10.75	40.79	-	-	-	-

[1]**Condensable Particulate Matter:** Include condensable particulate matter emissions for PM10 and PM2.5 if the source is a combustion source. Do not include condensable particulate matter for PM unless PM is set equal to PM10 and PM2.5. Particulate matter (PM) is not subject to an ambient air quality standard, but PM is a regulated air pollutant under PSD (20.2.74 NMAC) and Title V (20.2.70 NMAC).

Table 2-E: Requested Allowable Emissions - WITH COGENERATION

Unit & stack numbering must be consistent throughout the application package. Fill all cells in this table with the emission numbers or a "-" symbol. A "-" symbol indicates that emissions of this pollutant are not expected. Numbers shall be expressed to at least 2 decimal points (e.g. 0.41, 1.41, or $1.41E^{-4}$).

Unit No.	NOx		CO		VOC		SOx		PM[1]		PM10[1]		PM2.5[1]		H_2S		Lead	
	lb/hr[2]	ton/yr	lb/hr[2]	ton/yr	lb/hr[2]	ton/yr	lb/hr[2]	ton/yr	lb/hr[2]	ton/yr	lb/hr[2]	ton/yr	lb/hr[2]	ton/yr	lb/hr	ton/yr	lb/hr	ton/yr
SHTR1	1.73	7.58	1.06	4.63	0.41	1.82	0.14	0.63	0.48	2.12	0.48	2.12	0.48	2.12	-	-	-	-
SHTR2	1.73	7.58	1.06	4.63	0.41	1.82	0.14	0.63	0.48	2.12	0.48	2.12	0.48	2.12	-	-	-	-
RHTR1	1.05	4.58	0.64	2.79	0.25	1.10	0.09	0.38	0.29	1.28	0.29	1.28	0.29	1.28	-	-	-	-
RHTR2	1.05	4.58	0.64	2.79	0.25	1.10	0.09	0.38	0.29	1.28	0.29	1.28	0.29	1.28	-	-	-	-
RHTR3	1.05	4.58	0.64	2.79	0.25	1.10	0.09	0.38	0.29	1.28	0.29	1.28	0.29	1.28	-	-	-	-
FL1-FL3 - Pilot/Purge	2.68	11.73	5.35	23.42	0.80	3.52	0.00	0.00	0.14	0.63	0.14	0.63	0.14	0.63	-	-	-	-
FL1-FL3OVHD-SSM	61.51	11.20	122.80	22.35	404.29	73.58	0.00	0.00	3.32	0.60	3.32	0.60	3.32	0.60	-	-	-	-
FL1-FL3CRYO-SSM	102.43	18.64	204.48	37.22	210.13	38.24	0.05	0.01	5.29	0.96	5.29	0.96	5.29	0.96	-	-	-	-
IFR1	-	-	-	-	1.18	5.15	-	-	-	-	-	-	-	-	-	-	-	-
IFR2	-	-	-	-	1.18	5.15	-	-	-	-	-	-	-	-	-	-	-	-
IFR3	-	-	-	-	1.18	5.15	-	-	-	-	-	-	-	-	-	-	-	-
IFR4	-	-	-	-	1.18	5.15	-	-	-	-	-	-	-	-	-	-	-	-
OTK1	Emissions represented at ECD1.																	
OTK2	Emissions represented at ECD1.																	
OTK3	Emissions represented at ECD1.																	
OTK4	Emissions represented at ECD1.																	
OTK5	Emissions represented at ECD1.																	
OTK6	Emissions represented at ECD1.																	
ECD1	1.59	6.09	3.18	12.15	7.28	28.27	0.00	0.00	0.09	0.13	0.09	0.13	0.09	0.13	-	-	-	-
TO1	2.52	11.03	2.09	9.15	0.62	2.74	0.86	3.78	0.23	1.03	0.23	1.03	0.23	1.03	-	-	-	-
TO2	2.52	11.03	2.09	9.15	0.62	2.74	0.86	3.78	0.23	1.03	0.23	1.03	0.23	1.03	-	-	-	-
TO3	2.52	11.03	2.09	9.15	0.62	2.74	0.86	3.78	0.23	1.03	0.23	1.03	0.23	1.03	-	-	-	-
FUG	-	-	-	-	30.62	134.10	-	-	-	-	-	-	-	-	-	-	-	-

Table 2-E: Requested Allowable Emissions - WITH COGENERATION

Unit & stack numbering must be consistent throughout the application package. Fill all cells in this table with the emission numbers or a "-" symbol. A "-" symbol indicates that emissions of this pollutant are not expected. Numbers shall be expressed to at least 2 decimal points (e.g. 0.41, 1.41, or $1.41E^{-4}$).

Unit No.	NOx		CO		VOC		SOx		PM[1]		PM10[1]		PM2.5[1]		H_2S		Lead	
	lb/hr[2]	ton/yr	lb/hr[2]	ton/yr	lb/hr[2]	ton/yr	lb/hr[2]	ton/yr	lb/hr[2]	ton/yr	lb/hr[2]	ton/yr	lb/hr[2]	ton/yr	lb/hr	ton/yr	lb/hr	ton/yr
SSM	-	-	-	-	-	10.00	-	-	-	-	-	-	-	-	-	-	-	-
ROAD	-	-	-	-	-	-	-	-	2.76	8.83	0.70	2.25	0.07	0.22	-	-	-	-
PWTK1	Emissions represented at ECD1.																	
PWTK2	Emissions represented at ECD1.																	
PWTL	-	-	-	-	0.39	2.49	-	-	-	-	-	-	-	-	-	-	-	-
OTL	-	-	-	-	0.71	0.13	-	-	-	-	-	-	-	-	-	-	-	-
AU1	Emissions represented at TO1.																	
AU2	Emissions represented at TO2.																	
AU3	Emissions represented at TO3.																	
GBS1	Emissions represented at ECD1.																	
OTK7	Emissions represented at ECD1.																	
TUR1	8.40	36.79	5.10	22.34	9.20	40.30	2.14	9.35	9.20	40.30	9.20	40.30	9.20	40.30	-	-	-	-
TUR2	8.40	36.79	5.10	22.34	9.20	40.30	2.14	9.35	9.20	40.30	9.20	40.30	9.20	40.30	-	-	-	-
TUR3	8.40	36.79	5.10	22.34	9.20	40.30	2.14	9.35	9.20	40.30	9.20	40.30	9.20	40.30	-	-	-	-
TUR4	8.40	36.79	5.10	22.34	9.20	40.30	2.14	9.35	9.20	40.30	9.20	40.30	9.20	40.30	-	-	-	-
GEN1	7.60	0.38	12.77	0.64	4.89	0.24	0.05	0.00	0.21	0.01	0.21	0.01	0.21	0.01	-	-	-	-
GEN2	7.60	0.38	12.77	0.64	4.89	0.24	0.05	0.00	0.21	0.01	0.21	0.01	0.21	0.01	-	-	-	-
GEN3	7.60	0.38	12.77	0.64	4.89	0.24	0.05	0.00	0.21	0.01	0.21	0.01	0.21	0.01	-	-	-	-
GEN4	7.60	0.38	12.77	0.64	4.89	0.24	0.05	0.00	0.21	0.01	0.21	0.01	0.21	0.01	-	-	-	-
GEN5	7.60	0.38	12.77	0.64	4.89	0.24	0.05	0.00	0.21	0.01	0.21	0.01	0.21	0.01	-	-	-	-
GEN6	7.60	0.38	12.77	0.64	4.89	0.24	0.05	0.00	0.21	0.01	0.21	0.01	0.21	0.01	-	-	-	-
GEN7	7.60	0.38	12.77	0.64	4.89	0.24	0.05	0.00	0.21	0.01	0.21	0.01	0.21	0.01	-	-	-	-
GEN8	7.60	0.38	12.77	0.64	4.89	0.24	0.05	0.00	0.21	0.01	0.21	0.01	0.21	0.01	-	-	-	-
Totals	154.5	259.9	243.7	234.7	489.0	489.2	11.7	51.2	47.6	183.6	45.6	177.0	44.9	175.0	-	-	-	-

[1] **Condensable Particulate Matter:** Include condensable particulate matter emissions for PM10 and PM2.5 if the source is a combustion source. Do not include condensable particulate matter for PM unless PM is set equal to PM10 and PM2.5. Particulate matter (PM) is not subject to an ambient air quality standard, but it is a regulated air pollutant under PSD (20.2.74 NMAC) and Title V (20.2.70 NMAC).

[2] For all pollutants except VOC/HAP, the hourly emission rate excludes the generators and overhead SSM stream as they cannot occur at the same time and the cryo SSM stream has a higher emission rate. For VOC, the overhead SSM stream is included with the highest hourly rate. For HAP, the generators have the highest hourly rate.

Table 2-E: Requested Allowable Emissions - WITHOUT COGENERATION

Unit & stack numbering must be consistent throughout the application package. Fill all cells in this table with the emission numbers or a "-" symbol. A "-" symbol indicates that emissions of this pollutant are not expected. Numbers shall be expressed to at least 2 decimal points (e.g. 0.41, 1.41, or 1.41E $^{-4}$).

Unit No.	NOx		CO		VOC		SOx		PM[1]		PM10[1]		PM2.5[1]		H_2S		Lead	
	lb/hr	ton/yr	lb/hr	ton/yr	lb/hr	ton/yr	lb/hr	ton/yr	lb/hr	ton/yr	lb/hr	ton/yr	lb/hr	ton/yr	lb/hr	ton/yr	lb/hr	ton/yr
SHTR1	1.73	7.58	1.06	4.63	0.41	1.82	0.14	0.63	0.48	2.12	0.48	2.12	0.48	2.12	-	-	-	-
SHTR2	1.73	7.58	1.06	4.63	0.41	1.82	0.14	0.63	0.48	2.12	0.48	2.12	0.48	2.12	-	-	-	-
SHTR3	1.73	7.58	1.06	4.63	0.41	1.82	0.14	0.63	0.48	2.12	0.48	2.12	0.48	2.12	-	-	-	-
SHTR4	1.73	7.58	1.06	4.63	0.41	1.82	0.14	0.63	0.48	2.12	0.48	2.12	0.48	2.12	-	-	-	-
SHTR5	1.73	7.58	1.06	4.63	0.41	1.82	0.14	0.63	0.48	2.12	0.48	2.12	0.48	2.12	-	-	-	-
SHTR6	1.73	7.58	1.06	4.63	0.41	1.82	0.14	0.63	0.48	2.12	0.48	2.12	0.48	2.12	-	-	-	-
SHTR7	1.73	7.58	1.06	4.63	0.41	1.82	0.14	0.63	0.48	2.12	0.48	2.12	0.48	2.12	-	-	-	-
SHTR8	1.73	7.58	1.06	4.63	0.41	1.82	0.14	0.63	0.48	2.12	0.48	2.12	0.48	2.12	-	-	-	-
SHTR9	1.73	7.58	1.06	4.63	0.41	1.82	0.14	0.63	0.48	2.12	0.48	2.12	0.48	2.12	-	-	-	-
SHTR10	1.73	7.58	1.06	4.63	0.41	1.82	0.14	0.63	0.48	2.12	0.48	2.12	0.48	2.12	-	-	-	-
SHTR11	1.73	7.58	1.06	4.63	0.41	1.82	0.14	0.63	0.48	2.12	0.48	2.12	0.48	2.12	-	-	-	-
SHTR12	1.73	7.58	1.06	4.63	0.41	1.82	0.14	0.63	0.48	2.12	0.48	2.12	0.48	2.12	-	-	-	-
CHTR1	3.47	15.21	1.70	7.42	0.67	2.92	0.23	1.00	0.77	3.39	0.77	3.39	0.77	3.39	-	-	-	-
CHTR2	3.47	15.21	1.70	7.42	0.67	2.92	0.23	1.00	0.77	3.39	0.77	3.39	0.77	3.39	-	-	-	-
CHTR3	3.47	15.21	1.70	7.42	0.67	2.92	0.23	1.00	0.77	3.39	0.77	3.39	0.77	3.39	-	-	-	-
RHTR1	1.05	4.58	0.64	2.79	0.25	1.10	0.09	0.38	0.29	1.28	0.29	1.28	0.29	1.28	-	-	-	-
RHTR2	1.05	4.58	0.64	2.79	0.25	1.10	0.09	0.38	0.29	1.28	0.29	1.28	0.29	1.28	-	-	-	-
RHTR3	1.05	4.58	0.64	2.79	0.25	1.10	0.09	0.38	0.29	1.28	0.29	1.28	0.29	1.28	-	-	-	-
FL1-FL3 - Pilot/Purge	2.68	11.73	5.35	23.42	0.80	3.52	0.00	0.00	0.14	0.63	0.14	0.63	0.14	0.63	-	-	-	-
FL1-FL3OVHD-SSM	61.51	11.20	122.80	22.35	404.29	73.58	0.00	0.00	3.32	0.60	3.32	0.60	3.32	0.60	-	-	-	-
FL1-FL3CRYO SSM	102.43	18.64	204.48	37.22	210.13	38.24	0.05	0.01	5.29	0.96	5.29	0.96	5.29	0.96	-	-	-	-
IFR1	-	-	-	-	1.18	5.15	-	-	-	-	-	-	-	-	-	-	-	-
IFR2	-	-	-	-	1.18	5.15	-	-	-	-	-	-	-	-	-	-	-	-

Table 2-E: Requested Allowable Emissions - WITHOUT COGENERATION

Unit & stack numbering must be consistent throughout the application package. Fill all cells in this table with the emission numbers or a "-" symbol. A "-" symbol indicates that emissions of this pollutant are not expected. Numbers shall be expressed to at least 2 decimal points (e.g. 0.41, 1.41, or 1.41E $^{-4}$).

Unit No.	NOx		CO		VOC		SOx		PM[1]		PM10[1]		PM2.5[1]		H_2S		Lead	
	lb/hr	ton/yr	lb/hr	ton/yr	lb/hr	ton/yr	lb/hr	ton/yr	lb/hr	ton/yr	lb/hr	ton/yr	lb/hr	ton/yr	lb/hr	ton/yr	lb/hr	ton/yr
IFR3	-	-	-	-	1.18	5.15	-	-	-	-	-	-	-	-	-	-	-	-
IFR4	-	-	-	-	1.18	5.15	-	-	-	-	-	-	-	-	-	-	-	-
OTK1	Emissions represented at ECD1.																	
OTK2	Emissions represented at ECD1.																	
OTK3	Emissions represented at ECD1.																	
OTK4	Emissions represented at ECD1.																	
OTK5	Emissions represented at ECD1.																	
OTK6	Emissions represented at ECD1.																	
ECD1	1.59	6.09	3.18	12.15	7.28	28.27	0.00	0.00	0.09	0.13	0.09	0.13	0.09	0.13	-	-	-	-
TO1	2.52	11.03	2.09	9.15	0.62	2.74	0.86	3.78	0.23	1.03	0.23	1.03	0.23	1.03	-	-	-	-
TO2	2.52	11.03	2.09	9.15	0.62	2.74	0.86	3.78	0.23	1.03	0.23	1.03	0.23	1.03	-	-	-	-
TO3	2.52	11.03	2.09	9.15	0.62	2.74	0.86	3.78	0.23	1.03	0.23	1.03	0.23	1.03	-	-	-	-
FUG	-	-	-	-	30.62	134.10	-	-	-	-	-	-	-	-	-	-	-	-
SSM	-	-	-	-	-	10.00	-	-	-	-	-	-	-	-	-	-	-	-
ROAD	-	-	-	-	-	-	-	-	2.76	8.83	0.70	2.25	0.07	0.22	-	-	-	-
PWTK1	Emissions represented at ECD1.																	
PWTK2	Emissions represented at ECD1.																	
PWTL	-	-	-	-	0.39	2.49	-	-	-	-	-	-	-	-	-	-	-	-
OTL	-	-	-	-	0.71	0.13	-	-	-	-	-	-	-	-	-	-	-	-
AU1	Emissions are represented at TO1.																	
AU2	Emissions are represented at TO2.																	
AU3	Emissions are represented at TO3																	
GBS1	Emissions represented at ECD1.																	
OTK7	Emissions represented at ECD1.																	
GEN1	7.60	0.38	12.77	0.64	4.89	0.24	0.05	0.00	0.21	0.01	0.21	0.01	0.21	0.01	-	-	-	-
GEN2	7.60	0.38	12.77	0.64	4.89	0.24	0.05	0.00	0.21	0.01	0.21	0.01	0.21	0.01	-	-	-	-
GEN3	7.60	0.38	12.77	0.64	4.89	0.24	0.05	0.00	0.21	0.01	0.21	0.01	0.21	0.01	-	-	-	-
GEN4	7.60	0.38	12.77	0.64	4.89	0.24	0.05	0.00	0.21	0.01	0.21	0.01	0.21	0.01	-	-	-	-
GEN5	7.60	0.38	12.77	0.64	4.89	0.24	0.05	0.00	0.21	0.01	0.21	0.01	0.21	0.01	-	-	-	-

Table 2-E: Requested Allowable Emissions - WITHOUT COGENERATION

Unit & stack numbering must be consistent throughout the application package. Fill all cells in this table with the emission numbers or a "-" symbol. A "-" symbol indicates that emissions of this pollutant are not expected. Numbers shall be expressed to at least 2 decimal points (e.g. 0.41, 1.41, or 1.41E $^{-4}$).

Unit No.	NOx		CO		VOC		SOx		PM[1]		PM10[1]		PM2.5[1]		H_2S		Lead	
	lb/hr	ton/yr	lb/hr	ton/yr	lb/hr	ton/yr	lb/hr	ton/yr	lb/hr	ton/yr	lb/hr	ton/yr	lb/hr	ton/yr	lb/hr	ton/yr	lb/hr	ton/yr
GEN6	7.60	0.38	12.77	0.64	4.89	0.24	0.05	0.00	0.21	0.01	0.21	0.01	0.21	0.01	-	-	-	-
GEN7	7.60	0.38	12.77	0.64	4.89	0.24	0.05	0.00	0.21	0.01	0.21	0.01	0.21	0.01	-	-	-	-
GEN8	7.60	0.38	12.77	0.64	4.89	0.24	0.05	0.00	0.21	0.01	0.21	0.01	0.21	0.01	-	-	-	-
Totals	148.6	234.1	239.0	213.9	458.4	354.9	5.3	23.0	18.0	53.7	15.9	47.1	15.3	45.1	-	-	-	-

[1] **Condensable Particulate Matter:** Include condensable particulate matter emissions for PM10 and PM2.5 if the source is a combustion source. Do not include condensable particulate matter for PM unless PM is set equal to PM10 and PM2.5. Particulate matter (PM) is not subject to an ambient air quality standard, but it is a regulated air pollutant under PSD (20.2.74 NMAC) and Title V (20.2.70 NMAC).

[2] For all pollutants except VOC/HAP, the hourly emission rate excludes the generators and overhead SSM stream as they cannot occur at the same time and the cryo SSM stream has a higher emission rate. For VOC, the overhead SSM stream is included with the highest hourly rate. For HAP, the generators have the highest hourly rate.

Table 2-F: Additional Emissions during Startup, Shutdown, and Routine Maintenance (SSM)

☐ This table is intentionally left blank since all emissions at this facility due to routine or predictable startup, shutdown, or scehduled maintenance are no higher than those listed in Table 2-E and a malfunction emission limit is not already permitted or requested. If you are required to report GHG emissions as described in Section 6a, include any GHG emissions during Startup, Shutdown, and/or Scheduled Maintenance (SSM) in Table 2-P. Provide an explanations of SSM emissions in Section 6 and 6a.

All applications for facilities that have emissions during routine our predictable startup, shutdown or scheduled maintenance (SSM)[1], including NOI applications, must include in this table the Maximum Emissions during routine or predictable startup, shutdown and scheduled maintenance (20.2.7 NMAC, 20.2.72.203.A.3 NMAC, 20.2.73.200.D.2 NMAC). In Section 6 and 6a, provide emissions calculations for all SSM emissions reported in this table. Refer to "Guidance for Submittal of Startup, Shutdown, Maintenance Emissions in Permit Applications (https://www.env.nm.gov/aqb/permit/aqb_pol.html) for more detailed instructions. Numbers shall be expressed to at least 2 decimal points (e.g. 0.41, 1.41, or 1.41E-4).

Unit No.	NOx		CO		VOC		SOx		PM[2]		PM10[2]		PM2.5[2]		H_2S		Lead	
	lb/hr	ton/yr	lb/hr	ton/yr	lb/hr	ton/yr	lb/hr	ton/yr	lb/hr	ton/yr	lb/hr	ton/yr	lb/hr	ton/yr	lb/hr	ton/yr	lb/hr	ton/yr
SSM	-	-	-	-	-	10.00	-	-	-	-	-	-	-	-	-	-	-	-
FL1-FL3OVHD-SSM	61.51	11.20	122.80	22.35	404.29	73.58	0.00	0.00	3.32	0.60	3.32	0.60	3.32	0.60				
FL1-FL3CRYO-SSM	102.43	18.64	204.48	37.22	210.13	38.24	0.05	0.01	5.29	0.96	5.29	0.96	5.29	0.96				
Totals	163.9	29.8	327.3	59.6	614.4	121.8	0.1	0.0	8.6	1.6	8.6	1.6	8.6	1.6	-	-	-	-

[1] **For instance**, if the short term steady-state Table 2-E emissions are 5 lb/hr and the SSM rate is 12 lb/hr, enter 7 lb/hr in this table. If the annual steady-state Table 2-E emissions are 21.9 TPY, and the number of scheduled SSM events result in annual emissions of 31.9 TPY, enter 10.0 TPY in the table below.

[2] **Condensable Particulate Matter:** Include condensable particulate matter emissions for PM10 and PM2.5 if the source is a combustion source. Do not include condensable particulate matter for PM unless PM is set equal to PM10 and PM2.5. Particulate matter (PM) is not subject to an ambient air quality standard, but it is a regulated air pollutant under PSD (20.2.74 NMAC) and Title V (20.2.70 NMAC).

Table 2-G: Stack Exit and Fugitive Emission Rates for Special Stacks

☑ I have elected to leave this table blank because this facility does not have any stacks/vents that split emissions from a single source or combine emissions from more than one source listed in table 2-A. Additionally, the emission rates of all stacks match the Requested allowable emission rates stated in Table 2-E.

Use this table to list stack emissions (requested allowable) from split and combined stacks. List Toxic Air Pollutants (TAPs) and Hazardous Air Pollutants (HAPs) in Table 2-I. List all fugitives that are associated with the normal, routine, and non-emergency operation of the facility. Unit and stack numbering must correspond throughout the application package. Refer to Table 2-E for instructions on use of the "-" symbol and on significant figures.

Stack No.	Serving Unit Number(s) from Table 2-A	NOx		CO		VOC		SOx		PM		PM10		PM2.5		□ H_2S or □ Lead	
		lb/hr	ton/yr	lb/hr	ton/yr	lb/hr	ton/yr	lb/hr	ton/yr	lb/hr	ton/yr	lb/hr	ton/yr	lb/hr	ton/yr	lb/hr	ton/yr
N/A - This facility does not have Special Stacks																	
Totals:																	

Table 2-H: Stack Exit Conditions

Unit and stack numbering must correspond throughout the application package. Include the stack exit conditions for each unit that emits from a stack, including blowdown venting parameters and tank emissions.

Stack Number	Serving Unit Number(s) from Table 2-A	Orientation (H-Horizontal V=Vertical)	Rain Caps (Yes or No)	Height Above Ground (ft)	Temp. (F)	Flow Rate		Moisture by Volume (%)	Velocity (ft/sec)	Inside Diameter (ft)
						(acfs)	(dscfs)			
SHTR1	SHTR1	V	No	33.0	488	485	NA	0	38.6	4.0
SHTR2	SHTR2	V	No	32.6	488	485	NA	0	38.6	4.0
SHTR3	SHTR3	V	No	32.6	488	485	NA	0	38.6	4.0
SHTR4	SHTR4	V	No	32.6	488	485	NA	0	38.6	4.0
SHTR5	SHTR5	V	No	32.6	488	485	NA	0	38.6	4.0
SHTR6	SHTR6	V	No	32.6	488	485	NA	0	38.6	4.0
SHTR7	SHTR7	V	No	32.6	488	485	NA	0	38.6	4.0
SHTR8	SHTR8	V	No	32.6	488	485	NA	0	38.6	4.0
SHTR9	SHTR9	V	No	32.6	488	485	NA	0	38.6	4.0
SHTR10	SHTR10	V	No	32.6	488	485	NA	0	38.6	4.0
SHTR11	SHTR11	V	No	32.6	488	485	NA	0	38.6	4.0
SHTR12	SHTR12	V	No	32.6	488	485	NA	0	38.6	4.0
CHTR1	CHTR1	V	No	76.9	599	902	NA	0	71.8	4.0
CHTR2	CHTR2	V	No	76.9	599	902	NA	0	71.8	4.0
CHTR3	CHTR3	V	No	76.9	599	902	NA	0	71.8	4.0
RHTR1	RHTR1	V	No	28.5	470	321	NA	0	57.5	2.7
RHTR2	RHTR2	V	No	28.5	470	321	NA	0	57.5	2.7
RHTR3	RHTR3	V	No	28.5	470	321	NA	0	57.5	2.7
FL1	FL1	V	No	170.0	1832	52	NA	0	65.6	0.2
FL2	FL2	V	No	170.0	1832	52	NA	0	65.6	0.2
FL3	FL3	V	No	170.0	1832	52	NA	0	65.6	0.2
ECD1	ECD1	V	No	40.0	1450	529	NA	0	39.5	8.4
TO1	TO1	V	No	57.0	1600	693.7	NA	0	51.9	4.1
TO2	TO2	V	No	57.0	1600	693.7	NA	0	51.9	4.1

Table 2-H: Stack Exit Conditions

Unit and stack numbering must correspond throughout the application package. Include the stack exit conditions for each unit that emits from a stack, including blowdown venting parameters and tank emissions.

Stack Number	Serving Unit Number(s) from Table 2-A	Orientation (H-Horizontal V=Vertical)	Rain Caps (Yes or No)	Height Above Ground (ft)	Temp. (F)	Flow Rate		Moisture by Volume (%)	Velocity (ft/sec)	Inside Diameter (ft)
						(acfs)	(dscfs)			
TO3	TO3	V	No	57.0	1600	693.7	NA	0	51.9	4.1
TUR1	TUR1	V	No	150.0	185	7700.7	NA	0	38.3	16.0
TUR2	TUR2	V	No	150.0	185	7700.7	NA	0	38.3	16.0
TUR3	TUR3	V	No	150.0	185	7700.7	NA	0	38.3	16.0
TUR4	TUR4	V	No	150.0	185	7700.7	NA	0	38.3	16.0
GEN1	GEN1	V	No	14.0	815.0	224.3	NA	0	285.5	1.0
GEN2	GEN2	V	No	14.0	815.0	224.3	NA	0	285.5	1.0
GEN3	GEN3	V	No	14.0	815.0	224.3	NA	0	285.5	1.0
GEN4	GEN4	V	No	14.0	815.0	224.3	NA	0	285.5	1.0
GEN5	GEN5	V	No	14.0	815.0	224.3	NA	0	285.5	1.0
GEN6	GEN6	V	No	14.0	815.0	224.3	NA	0	285.5	1.0
GEN7	GEN7	V	No	14.0	815.0	224.3	NA	0	285.5	1.0
GEN8	GEN8	V	No	14.0	815.0	224.3	NA	0	285.5	1.0

Table 2-I: Stack Exit and Fugitive Emission Rates for HAPs and TAPs - WITH COGENERATION

In the table below, report the Potential to Emit for each HAP from each regulated emission unit listed in Table 2-A, only if the entire facility emits the HAP at a rate greater than or equal to one (1) ton per year For each such emission unit, HAPs shall be reported to the nearest 0.1 tpy. Each facility-wide Individual HAP total and the facility-wide Total HAPs shall be the sum of all HAP sources calculated to the nearest 0.1 ton per year. Per 20.2.72.403.A.1 NMAC, facilities not exempt [see 20.2.72.402.C NMAC] from TAP permitting shall report each TAP that has an uncontrolled emission rate in excess of its pounds per hour screening level specified in 20.2.72.502 NMAC. TAPs shall be reported using one more significant figure than the number of significant figures shown in the pound per hour threshold corresponding to the substance. Use the HAP nomenclature as it appears in Section 112 (b) of the 1990 CAAA and the TAP nomenclature as it listed in 20.2.72.502 NMAC. Include tank-flashing emissions estimates of HAPs in this table. For each HAP or TAP listed, fill all cells in this table with the emission numbers or a "-" symbol. A "-" symbol indicates that emissions of this pollutant are not expected or the pollutant is emitted in a quantity less than the threshold amounts described above.

Stack No.	Unit No.(s)	Total HAPs		n-Hexane ☑ HAP or ☐ TAP		Benzene ☑ HAP or ☐ TAP		Toluene ☑ HAP or ☐ TAP		Ethylbenzene ☑ HAP or ☐ TAP		Xylene ☑ HAP or ☐ TAP		Formaldehyde ☑ HAP or ☐ TAP		H2SO4 ☐ HAP or ☑ TAP		Ammonia ☐ HAP or ☑ TAP		Provide Pollutant Name Here ☐ HAP or ☐ TAP	
		lb/hr	ton/yr	lb/hr	ton/yr	lb/hr	ton/yr	lb/hr	ton/yr	lb/hr	ton/yr	lb/hr	ton/yr	lb/hr	ton/yr	lb/hr	ton/yr	lb/hr	ton/yr	lb/hr	ton/yr
SHTR1	SHTR1	0.12	0.52	0.11	0.50	0.00	0.00	0.00	0.00	0.00	0.00	0.00	0.00	0.00	0.02	--	--	--	--		
SHTR2	SHTR2	0.12	0.52	0.11	0.50	0.00	0.00	0.00	0.00	0.00	0.00	0.00	0.00	0.00	0.02	--	--	--	--		
RHTR1	RHTR1	0.07	0.32	0.07	0.30	0.00	0.00	0.00	0.00	0.00	0.00	0.00	0.00	0.00	0.01	--	--	--	--		
RHTR2	RHTR2	0.07	0.32	0.07	0.30	0.00	0.00	0.00	0.00	0.00	0.00	0.00	0.00	0.00	0.01	--	--	--	--		
RHTR3	RHTR3	0.07	0.32	0.07	0.30	0.00	0.00	0.00	0.00	0.00	0.00	0.00	0.00	0.00	0.01	--	--	--	--		
FL1-FL3 - Pilot/Purge	FL1-FL3 - Pilot/Purge	0.00	0.00	0.00	0.00	0.00	0.00	0.00	0.00	0.00	0.00	0.00	0.00	0.00	0.00	--	--	--	--		
FL1-FL3OVHD-SSM	FL1-FL3OVHD-SSM	4.45	0.81	1.96	0.36	1.47	0.27	0.82	0.15	0.00	0.00	0.21	0.04	0.00	0.00	--	--	--	--		
FL1-FL3CRYO-SSM	FL1-FL3CRYO-SSM	1.31	0.24	0.82	0.15	0.49	0.09	0.00	0.00	0.00	0.00	0.00	0.00	0.00	0.00	--	--	--	--		
IFR1	IFR1	0.07	0.30	0.02	0.10	0.01	0.06	0.02	0.08	0.00	0.00	0.01	0.05	0.00	0.00	--	--	--	--		
IFR2	IFR2	0.07	0.30	0.02	0.10	0.01	0.06	0.02	0.08	0.00	0.00	0.01	0.05	0.00	0.00	--	--	--	--		
IFR3	IFR3	0.07	0.30	0.02	0.10	0.01	0.06	0.02	0.08	0.00	0.00	0.01	0.05	0.00	0.00	--	--	--	--		
IFR4	IFR4	0.07	0.30	0.02	0.10	0.01	0.06	0.02	0.08	0.00	0.00	0.01	0.05	0.00	0.00	--	--	--	--		
ECD1	OTK1	Emissions are represented at ECD1.																			
ECD1	OTK2	Emissions are represented at ECD1.																			
ECD1	OTK3	Emissions are represented at ECD1.																			
ECD1	OTK4	Emissions are represented at ECD1.																			
ECD1	OTK5	Emissions are represented at ECD1.																			
ECD1	OTK6	Emissions are represented at ECD1.																			
ECD1	ECD1	0.28	1.07	0.14	0.53	0.08	0.30	0.05	0.19	0.00	0.00	0.01	0.04	0.00	0.00	--	--	--	--		
TO1	TO1	0.08	0.35	0.02	0.07	0.02	0.07	0.02	0.07	0.02	0.07	0.00	0.00	0.00	0.00	--	--	--	--		
TO2	TO2	0.08	0.35	0.02	0.07	0.02	0.07	0.02	0.07	0.02	0.07	0.00	0.00	0.00	0.00	--	--	--	--		
TO3	TO3	0.08	0.35	0.02	0.07	0.02	0.07	0.02	0.07	0.02	0.07	0.00	0.00	0.00	0.00	--	--	--	--		
FUG	FUG	1.83	8.04	0.00	0.00	0.00	0.00	0.00	0.00	0.00	0.00	0.00	0.00	--	--	--	--	--	--		
SSM	SSM	--	--	--	--	--	--	--	--	--	--	--	--	--	--	--	--	--	--		
ROAD	ROAD	--	--	--	--	--	--	--	--	--	--	--	--	--	--	--	--	--	--		

Table 2-I: Stack Exit and Fugitive Emission Rates for HAPs and TAPs - WITH COGENERATION

In the table below, report the Potential to Emit for each HAP from each regulated emission unit listed in Table 2-A, only if the entire facility emits the HAP at a rate greater than or equal to one (1) ton per year For each such emission unit, HAPs shall be reported to the nearest 0.1 tpy. Each facility-wide Individual HAP total and the facility-wide Total HAPs shall be the sum of all HAP sources calculated to the nearest 0.1 ton per year. Per 20.2.72.403.A.1 NMAC, facilities not exempt [see 20.2.72.402.C NMAC] from TAP permitting shall report each TAP that has an uncontrolled emission rate in excess of its pounds per hour screening level specified in 20.2.72.502 NMAC. TAPs shall be reported using one more significant figure than the number of significant figures shown in the pound per hour threshold corresponding to the substance. Use the HAP nomenclature as it appears in Section 112 (b) of the 1990 CAAA and the TAP nomenclature as it listed in 20.2.72.502 NMAC. Include tank-flashing emissions estimates of HAPs in this table. For each HAP or TAP listed, fill all cells in this table with the emission numbers or a "-" symbol. A "-" symbol indicates that emissions of this pollutant are not expected or the pollutant is emitted in a quantity less than the threshold amounts described above.

Stack No.	Unit No.(s)	Total HAPs		n-Hexane ☑ HAP or ☐ TAP		Benzene ☑ HAP or ☐ TAP		Toluene ☑ HAP or ☐ TAP		Ethylbenzene ☑ HAP or ☐ TAP		Xylene ☑ HAP or ☐ TAP		Formaldehyde ☑ HAP or ☐ TAP		H2SO4 ☐ HAP or ☑ TAP		Ammonia ☐ HAP or ☑ TAP		Provide Pollutant Name Here ☐ HAP or ☐ TAP	
		lb/hr	ton/yr	lb/hr	ton/yr	lb/hr	ton/yr	lb/hr	ton/yr	lb/hr	ton/yr	lb/hr	ton/yr	lb/hr	ton/yr	lb/hr	ton/yr	lb/hr	ton/yr	lb/hr	ton/yr
ECD1	PWTK1	--																			
ECD1	PWTK2	Emissions are represented at ECD1.																			
PWTL	PWTL	0.00	0.01	0.00	0.00	0.00	0.00	--	--	--	--	0.00	0.00	0.00	0.00	--	--	--	--		
OTL	OTL	0.02	0.00	0.00	0.00	0.00	0.00	--	--	--	--	0.00	0.00	0.00	0.00	--	--	--	--		
TO1	AU1	Emissions are represented at TO1.																			
TO1	AU2	Emissions are represented at TO2.																			
TO1	AU3	Emissions are represented at TO3.																			
ECD1	GBS1	Emissions are represented at TO2.																			
ECD1	OTK7	Emissions are represented at TO1.																			
TUR1	TUR1	0.58	2.52	0.20	0.88	0.01	0.03	0.07	0.32	0.02	0.08	0.04	0.16	0.21	0.93	0.82	3.60	15.9	69.5		
TUR2	TUR2	0.58	2.52	0.20	0.88	0.01	0.03	0.07	0.32	0.02	0.08	0.04	0.16	0.21	0.93	0.82	3.60	15.9	69.5		
TUR3	TUR3	0.58	2.52	0.20	0.88	0.01	0.03	0.07	0.32	0.02	0.08	0.04	0.16	0.21	0.93	0.82	3.60	15.9	69.5		
TUR4	TUR4	0.58	2.52	0.20	0.88	0.01	0.03	0.07	0.32	0.02	0.08	0.04	0.16	0.21	0.93	0.82	3.60	15.9	69.5		
GEN1	GEN1	2.10	0.10	0.02	0.00	0.01	0.00	0.01	0.00	0.00	0.00	0.00	0.00	1.90	0.10	--	--	--	--		
GEN2	GEN2	2.10	0.10	0.02	0.00	0.01	0.00	0.01	0.00	0.00	0.00	0.00	0.00	1.90	0.10	--	--	--	--		
GEN3	GEN3	2.10	0.10	0.02	0.00	0.01	0.00	0.01	0.00	0.00	0.00	0.00	0.00	1.90	0.10	--	--	--	--		
GEN4	GEN4	2.10	0.10	0.02	0.00	0.01	0.00	0.01	0.00	0.00	0.00	0.00	0.00	1.90	0.10	--	--	--	--		
GEN5	GEN5	2.10	0.10	0.02	0.00	0.01	0.00	0.01	0.00	0.00	0.00	0.00	0.00	1.90	0.10	--	--	--	--		
GEN6	GEN6	2.10	0.10	0.02	0.00	0.01	0.00	0.01	0.00	0.00	0.00	0.00	0.00	1.90	0.10	--	--	--	--		
GEN7	GEN7	2.10	0.10	0.02	0.00	0.01	0.00	0.01	0.00	0.00	0.00	0.00	0.00	1.90	0.10	--	--	--	--		
GEN8	GEN8	2.10	0.10	0.02	0.00	0.01	0.00	0.01	0.00	0.00	0.00	0.00	0.00	1.90	0.10	--	--	--	--		
Totals:		22.2	25.3	1.7	7.1	0.3	1.2	0.5	2.1	0.1	0.5	0.2	0.9	16.1	4.6	3.3	14.4	63.4	277.9		

[1] The hourly emission rate excludes the SSM rates and includes the generator rates as they cannot occur at the same time and the generators have a higher total HAP emission rate.

Table 2-I: Stack Exit and Fugitive Emission Rates for HAPs and TAPs - WITHOUT COGENERATION

In the table below, report the Potential to Emit for each HAP from each regulated emission unit listed in Table 2-A, only if the entire facility emits the HAP at a rate greater than or equal to one (1) ton per year For each such emission unit, HAPs shall be reported to the nearest 0.1 tpy. Each facility-wide Individual HAP total and the facility-wide Total HAPs shall be the sum of all HAP sources calculated to the nearest 0.1 ton per year. Per 20.2.72.403.A.1 NMAC, facilities not exempt [see 20.2.72.402.C NMAC] from TAP permitting shall report each TAP that has an uncontrolled emission rate in excess of its pounds per hour screening level specified in 20.2.72.502 NMAC. TAPs shall be reported using one more significant figure than the number of significant figures shown in the pound per hour threshold corresponding to the substance. Use the HAP nomenclature as it appears in Section 112 (b) of the 1990 CAAA and the TAP nomenclature as it listed in 20.2.72.502 NMAC. Include tank-flashing emissions estimates of HAPs in this table. For each HAP or TAP listed, fill all cells in this table with the emission numbers or a "-" symbol. A "-" symbol indicates that emissions of this pollutant are not expected or the pollutant is emitted in a quantity less than the threshold amounts described above.

Stack No.	Unit No.(s)	Total HAPs		n-Hexane ☑ HAP or ☐ TAP		Benzene ☑ HAP or ☐ TAP		Toluene ☑ HAP or ☐ TAP		Ethylbenzene ☑ HAP or ☐ TAP		Xylene ☑ HAP or ☐ TAP		Formaldehyde ☑ HAP or ☐ TAP		H2SO4 ☐ HAP or ☑ TAP		Ammonia ☐ HAP or ☑ TAP		Provide Pollutant Name Here ☐ HAP or ☐ TAP	
		lb/hr	ton/yr	lb/hr	ton/yr	lb/hr	ton/yr	lb/hr	ton/yr	lb/hr	ton/yr	lb/hr	ton/yr	lb/hr	ton/yr	lb/hr	ton/yr	lb/hr	ton/yr	lb/hr	ton/yr
SHTR1	SHTR1	0.12	0.52	0.11	0.50	0.00	0.00	0.00	0.00	0.00	0.00	0.00	0.00	0.00	0.02	--	--	--	--		
SHTR2	SHTR2	0.12	0.52	0.11	0.50	0.00	0.00	0.00	0.00	0.00	0.00	0.00	0.00	0.00	0.02	--	--	--	--		
SHTR3	SHTR3	0.12	0.52	0.11	0.50	0.00	0.00	0.00	0.00	0.00	0.00	0.00	0.00	0.00	0.02	--	--	--	--		
SHTR4	SHTR4	0.12	0.52	0.11	0.50	0.00	0.00	0.00	0.00	0.00	0.00	0.00	0.00	0.00	0.02	--	--	--	--		
SHTR5	SHTR5	0.12	0.52	0.11	0.50	0.00	0.00	0.00	0.00	0.00	0.00	0.00	0.00	0.00	0.02	--	--	--	--		
SHTR6	SHTR6	0.12	0.52	0.11	0.50	0.00	0.00	0.00	0.00	0.00	0.00	0.00	0.00	0.00	0.02	--	--	--	--		
SHTR7	SHTR7	0.12	0.52	0.11	0.50	0.00	0.00	0.00	0.00	0.00	0.00	0.00	0.00	0.00	0.02	--	--	--	--		
SHTR8	SHTR8	0.12	0.52	0.11	0.50	0.00	0.00	0.00	0.00	0.00	0.00	0.00	0.00	0.00	0.02	--	--	--	--		
SHTR9	SHTR9	0.12	0.52	0.11	0.50	0.00	0.00	0.00	0.00	0.00	0.00	0.00	0.00	0.00	0.02	--	--	--	--		
SHTR10	SHTR10	0.12	0.52	0.11	0.50	0.00	0.00	0.00	0.00	0.00	0.00	0.00	0.00	0.00	0.02	--	--	--	--		
SHTR11	SHTR11	0.12	0.52	0.11	0.50	0.00	0.00	0.00	0.00	0.00	0.00	0.00	0.00	0.00	0.02	--	--	--	--		
SHTR12	SHTR12	0.12	0.52	0.11	0.50	0.00	0.00	0.00	0.00	0.00	0.00	0.00	0.00	0.00	0.02	--	--	--	--		
CHTR1	CHTR1	0.19	0.84	0.18	0.80	0.00	0.00	0.00	0.00	0.00	0.00	0.00	0.00	0.01	0.03	--	--	--	--		
CHTR2	CHTR2	0.19	0.84	0.18	0.80	0.00	0.00	0.00	0.00	0.00	0.00	0.00	0.00	0.01	0.03	--	--	--	--		
CHTR3	CHTR3	0.19	0.84	0.18	0.80	0.00	0.00	0.00	0.00	0.00	0.00	0.00	0.00	0.01	0.03	--	--	--	--		
RHTR1	RHTR1	0.07	0.32	0.07	0.30	0.00	0.00	0.00	0.00	0.00	0.00	0.00	0.00	0.00	0.01	--	--	--	--		
RHTR2	RHTR2	0.07	0.32	0.07	0.30	0.00	0.00	0.00	0.00	0.00	0.00	0.00	0.00	0.00	0.01	--	--	--	--		
RHTR3	RHTR3	0.07	0.32	0.07	0.30	0.00	0.00	0.00	0.00	0.00	0.00	0.00	0.00	0.00	0.01	--	--	--	--		
FL1-FL3 - Pilot/Purge	FL1-FL3 - Pilot/Purge	0.00	0.00	0.00	0.00	0.00	0.00	0.00	0.00	0.00	0.00	0.00	0.00	0.00	0.00	--	--	--	--		
FL1-FL3OVHD-SSM	FL1-FL3OVHD-SSM	4.45	0.81	1.96	0.36	1.47	0.27	0.82	0.15	0.00	0.00	0.21	0.04	0.00	0.00	--	--	--	--		
FL1-FL3CRYO-SSM	FL1-FL3CRYO-SSM	1.31	0.24	0.82	0.15	0.49	0.09	0.00	0.00	0.00	0.00	0.00	0.00	0.00	0.00	--	--	--	--		
IFR1	IFR1	0.07	0.30	0.02	0.10	0.01	0.06	0.02	0.08	0.00	0.00	0.01	0.05	0.00	0.00	--	--	--	--		
IFR2	IFR2	0.07	0.30	0.02	0.10	0.01	0.06	0.02	0.08	0.00	0.00	0.01	0.05	0.00	0.00	--	--	--	--		
IFR3	IFR3	0.07	0.30	0.02	0.10	0.01	0.06	0.02	0.08	0.00	0.00	0.01	0.05	0.00	0.00	--	--	--	--		

Table 2-I: Stack Exit and Fugitive Emission Rates for HAPs and TAPs - WITHOUT COGENERATION

In the table below, report the Potential to Emit for each HAP from each regulated emission unit listed in Table 2-A, only if the entire facility emits the HAP at a rate greater than or equal to one (1) ton per year For each such emission unit, HAPs shall be reported to the nearest 0.1 tpy. Each facility-wide Individual HAP total and the facility-wide Total HAPs shall be the sum of all HAP sources calculated to the nearest 0.1 ton per year. Per 20.2.72.403.A.1 NMAC, facilities not exempt [see 20.2.72.402.C NMAC] from TAP permitting shall report each TAP that has an uncontrolled emission rate in excess of its pounds per hour screening level specified in 20.2.72.502 NMAC. TAPs shall be reported using one more significant figure than the number of significant figures shown in the pound per hour threshold corresponding to the substance. Use the HAP nomenclature as it appears in Section 112 (b) of the 1990 CAAA and the TAP nomenclature as it listed in 20.2.72.502 NMAC. Include tank-flashing emissions estimates of HAPs in this table. For each HAP or TAP listed, fill all cells in this table with the emission numbers or a "-" symbol. A "-" symbol indicates that emissions of this pollutant are not expected or the pollutant is emitted in a quantity less than the threshold amounts described above.

Stack No.	Unit No.(s)	Total HAPs		n-Hexane ☑ HAP or ☐ TAP		Benzene ☑ HAP or ☐ TAP		Toluene ☑ HAP or ☐ TAP		Ethylbenzene ☑ HAP or ☐ TAP		Xylene ☑ HAP or ☐ TAP		Formaldehyde ☑ HAP or ☐ TAP		H2SO4 ☐ HAP or ☑ TAP		Ammonia ☐ HAP or ☑ TAP		Provide Pollutant Name Here ☐ HAP or ☐ TAP	
		lb/hr	ton/yr	lb/hr	ton/yr	lb/hr	ton/yr	lb/hr	ton/yr	lb/hr	ton/yr	lb/hr	ton/yr	lb/hr	ton/yr	lb/hr	ton/yr	lb/hr	ton/yr	lb/hr	ton/yr
IFR4	IFR4	0.07	0.30	0.02	0.10	0.01	0.06	0.02	0.08	0.00	0.00	0.01	0.05	0.00	0.00	--	--	--	--		
ECD1	OTK1	Emissions are represented at ECD1.																			
ECD1	OTK2	Emissions are represented at ECD1.																			
ECD1	OTK3	Emissions are represented at ECD1.																			
ECD1	OTK4	Emissions are represented at ECD1.																			
ECD1	OTK5	Emissions are represented at ECD1.																			
ECD1	OTK6	Emissions are represented at ECD1.																			
ECD1	ECD1	0.28	1.07	0.14	0.53	0.08	0.30	0.05	0.19	0.00	0.00	0.01	0.04	0.00	0.00	--	--	--	--		
TO1	TO1	0.08	0.35	0.02	0.07	0.02	0.07	0.02	0.07	0.02	0.07	0.00	0.00	0.00	0.00	--	--	--	--		
TO2	TO2	0.08	0.35	0.02	0.07	0.02	0.07	0.02	0.07	0.02	0.07	0.00	0.00	0.00	0.00	--	--	--	--		
TO3	TO3	0.08	0.35	0.02	0.07	0.02	0.07	0.02	0.07	0.02	0.07	0.00	0.00	0.00	0.00	--	--	--	--		
FUG	FUG	1.83	8.04	0.00	0.00	0.00	0.00	0.00	0.00	0.00	0.00	0.00	0.00	--	--	--	--	--	--		
SSM	SSM	--	--	--	--	--	--	--	--	--	--	--	--	--	--	--	--	--	--		
ROAD	ROAD	--	--	--	--	--	--	--	--	--	--	--	--	--	--	--	--	--	--		
ECD1	PWTK1	--																			
ECD1	PWTK2	Emissions are represented at ECD1.																			
PWTL	PWTL	0.00	0.01	0.00	0.00	0.00	0.00	--	--	--	--	0.00	0.00	0.00	0.00	--	--	--	--		
OTL	OTL	0.02	0.00	0.00	0.00	0.00	0.00	--	--	--	--	0.00	0.00	0.00	0.00	--	--	--	--		
TO1	AU1	Emissions are represented at TO1.																			
TO1	AU2	Emissions are represented at TO2.																			
TO1	AU3	Emissions are represented at TO3.																			
ECD1	GBS1	Emissions are represented at ECD1.																			
ECD1	OTK7	Emissions are represented at ECD1.																			
GEN1	GEN1	2.10	0.10	0.02	0.00	0.01	0.00	0.01	0.00	0.00	0.00	0.00	0.00	1.90	0.10	--	--	--	--		
GEN2	GEN2	2.10	0.10	0.02	0.00	0.01	0.00	0.01	0.00	0.00	0.00	0.00	0.00	1.90	0.10	--	--	--	--		
GEN3	GEN3	2.10	0.10	0.02	0.00	0.01	0.00	0.01	0.00	0.00	0.00	0.00	0.00	1.90	0.10	--	--	--	--		
GEN4	GEN4	2.10	0.10	0.02	0.00	0.01	0.00	0.01	0.00	0.00	0.00	0.00	0.00	1.90	0.10	--	--	--	--		

Table 2-I: Stack Exit and Fugitive Emission Rates for HAPs and TAPs - WITHOUT COGENERATION

In the table below, report the Potential to Emit for each HAP from each regulated emission unit listed in Table 2-A, only if the entire facility emits the HAP at a rate greater than or equal to one (1) ton per year For each such emission unit, HAPs shall be reported to the nearest 0.1 tpy. Each facility-wide Individual HAP total and the facility-wide Total HAPs shall be the sum of all HAP sources calculated to the nearest 0.1 ton per year. Per 20.2.72.403.A.1 NMAC, facilities not exempt [see 20.2.72.402.C NMAC] from TAP permitting shall report each TAP that has an uncontrolled emission rate in excess of its pounds per hour screening level specified in 20.2.72.502 NMAC. TAPs shall be reported using one more significant figure than the number of significant figures shown in the pound per hour threshold corresponding to the substance. Use the HAP nomenclature as it appears in Section 112 (b) of the 1990 CAAA and the TAP nomenclature as it listed in 20.2.72.502 NMAC. Include tank-flashing emissions estimates of HAPs in this table. For each HAP or TAP listed, fill all cells in this table with the emission numbers or a "-" symbol. A "-" symbol indicates that emissions of this pollutant are not expected or the pollutant is emitted in a quantity less than the threshold amounts described above.

Stack No.	Unit No.(s)	Total HAPs		n-Hexane ☑ HAP or ☐ TAP		Benzene ☑ HAP or ☐ TAP		Toluene ☑ HAP or ☐ TAP		Ethylbenzene ☑ HAP or ☐ TAP		Xylene ☑ HAP or ☐ TAP		Formaldehyde ☑ HAP or ☐ TAP		H2SO4 ☐ HAP or ☑ TAP		Ammonia ☐ HAP or ☑ TAP		Provide Pollutant Name Here ☐ HAP or ☐ TAP	
		lb/hr	ton/yr	lb/hr	ton/yr	lb/hr	ton/yr	lb/hr	ton/yr	lb/hr	ton/yr	lb/hr	ton/yr	lb/hr	ton/yr	lb/hr	ton/yr	lb/hr	ton/yr	lb/hr	ton/yr
GEN5	GEN5	2.10	0.10	0.02	0.00	0.01	0.00	0.01	0.00	0.00	0.00	0.00	0.00	1.90	0.10	--	--	--	--		
GEN6	GEN6	2.10	0.10	0.02	0.00	0.01	0.00	0.01	0.00	0.00	0.00	0.00	0.00	1.90	0.10	--	--	--	--		
GEN7	GEN7	2.10	0.10	0.02	0.00	0.01	0.00	0.01	0.00	0.00	0.00	0.00	0.00	1.90	0.10	--	--	--	--		
GEN8	GEN8	2.10	0.10	0.02	0.00	0.01	0.00	0.01	0.00	0.00	0.00	0.00	0.00	1.90	0.10	--	--	--	--		
Totals:		21.7	23.0	2.6	11.0	0.3	1.1	0.2	0.9	0.1	0.2	0.1	0.3	15.3	1.1	0.0	0.0	0.0	0.0		

[1] The hourly emission rate excludes the SSM rates and includes the generator rates as they cannot occur at the same time and the generators have a higher total HAP emission rate.

Table 2-J: Fuel

Specify fuel characteristics and usage. Unit and stack numbering must correspond throughout the application package.

Unit No.	Fuel Type (low sulfur Diesel, ultra low sulfur diesel, Natural Gas, Coal, …)	Fuel Source: purchased commercial, pipeline quality natural gas, residue gas, raw/field natural gas, process gas (e.g. SRU tail gas) or other	Specify Units				
			Lower Heating Value (Btu/scf)	Hourly Usage (scf)	Annual Usage (mmscf)	% Sulfur (by weight)	% Ash
SHTR1	Natural Gas	Field Gas	850	76271	668.1	< 0.0001	N/A
SHTR2	Natural Gas	Field Gas	850	76271	668.1	< 0.0001	N/A
SHTR3	Natural Gas	Field Gas	850	76271	668.1	< 0.0001	N/A
SHTR4	Natural Gas	Field Gas	850	76271	668.1	< 0.0001	N/A
SHTR5	Natural Gas	Field Gas	850	76271	668.1	< 0.0001	N/A
SHTR6	Natural Gas	Field Gas	850	76271	668.1	< 0.0001	N/A
SHTR7	Natural Gas	Field Gas	850	76271	668.1	< 0.0001	N/A
SHTR8	Natural Gas	Field Gas	850	76271	668.1	< 0.0001	N/A
SHTR9	Natural Gas	Field Gas	850	76271	668.1	< 0.0001	N/A
SHTR10	Natural Gas	Field Gas	850	76271	668.1	< 0.0001	N/A
SHTR11	Natural Gas	Field Gas	850	76271	668.1	< 0.0001	N/A
SHTR12	Natural Gas	Field Gas	850	76271	668.1	< 0.0001	N/A
CHTR1	Natural Gas	Field Gas	850	122341	1071.7	< 0.0001	N/A
CHTR2	Natural Gas	Field Gas	850	122341	1071.7	< 0.0001	N/A
CHTR3	Natural Gas	Field Gas	850	122341	1071.7	< 0.0001	N/A
RHTR1	Natural Gas	Field Gas	850	46047	403.4	< 0.0001	N/A
RHTR2	Natural Gas	Field Gas	850	46047	403.4	< 0.0001	N/A
RHTR3	Natural Gas	Field Gas	850	46047	403.4	< 0.0001	N/A
FL1	Natural Gas	Field Gas	850	46047	403.4	< 0.0001	N/A
FL2	Natural Gas	Field Gas	850	46047	403.4	< 0.0001	N/A
FL3	Natural Gas	Field Gas	850	46047	403.4	< 0.0001	N/A
TUR1	Natural Gas	Field Gas	850	1248462	10936.5	< 0.0001	N/A
TUR2	Natural Gas	Field Gas	850	1248462	10936.5	< 0.0001	N/A
TUR3	Natural Gas	Field Gas	850	1248462	10936.5	< 0.0001	N/A
TUR4	Natural Gas	Field Gas	850	1248462	10936.5	< 0.0001	N/A
GEN1	Natural Gas	Field Gas	850	24586	215.4	< 0.0001	N/A
GEN2	Natural Gas	Field Gas	850	24586	215.4	< 0.0001	N/A
GEN3	Natural Gas	Field Gas	850	24586	215.4	< 0.0001	N/A
GEN4	Natural Gas	Field Gas	850	24586	215.4	< 0.0001	N/A
GEN5	Natural Gas	Field Gas	850	24586	215.4	< 0.0001	N/A
GEN6	Natural Gas	Field Gas	850	24586	215.4	< 0.0001	N/A
GEN7	Natural Gas	Field Gas	850	24586	215.4	< 0.0001	N/A
GEN8	Natural Gas	Field Gas	850	24586	215.4	< 0.0001	N/A

Table 2-K: Liquid Data for Tanks Listed in Table 2-L

For each tank, list the liquid(s) to be stored in each tank. If it is expected that a tank may store a variety of hydrocarbon liquids, enter "mixed hydrocarbons" in the Composition column for that tank and enter the corresponding data of the most volatile liquid to be stored in the tank. If tank is to be used for storage of different materials, list all the materials in the "All Calculations" attachment, run the newest version of TANKS on each, and use the material with the highest emission rate to determine maximum uncontrolled and requested allowable emissions rate. The permit will specify the most volatile category of liquids that may be stored in each tank. Include appropriate tank-flashing modeling input data. Use additional sheets if necessary. Unit and stack numbering must correspond throughout the application package.

Tank No.	SCC Code	Material Name	Composition	Liquid Density (lb/gal)	Vapor Molecular Weight (lb/lb*mol)	Average Storage Conditions		Max Storage Conditions	
						Temperature (°F)	True Vapor Pressure (psia)	Temperature (°F)	True Vapor Pressure (psia)
IFR1	40400311	Oil/Condensate	Oil/Condensate	6.6	83.46	79.59	6.80	87.11	7.69
IFR2	40400311	Oil/Condensate	Oil/Condensate	6.6	83.46	79.59	6.80	87.11	7.69
IFR3	40400311	Oil/Condensate	Oil/Condensate	6.6	83.46	79.59	6.80	87.11	7.69
IFR4	40400311	Oil/Condensate	Oil/Condensate	6.6	83.46	79.59	6.80	87.11	7.69
OTK1	40400311	Oil/Condensate	Oil/Condensate	6.6	49.37	77.71	10.37	88.53	12.20
OTK2	40400311	Oil/Condensate	Oil/Condensate	6.6	49.37	77.71	10.37	88.53	12.20
OTK3	40400311	Oil/Condensate	Oil/Condensate	6.6	49.37	77.71	10.37	88.53	12.20
OTK4	40400311	Oil/Condensate	Oil/Condensate	6.6	49.37	77.71	10.37	88.53	12.20
OTK5	40400311	Oil/Condensate	Oil/Condensate	6.6	49.37	77.71	10.37	88.53	12.20
OTK6	40400311	Oil/Condensate	Oil/Condensate	6.6	49.37	77.71	10.37	88.53	12.20
PWTK1	40400315	Produced Water	Produced Water w/ Trace Oils	8.3	18.15	83.31	0.57	94.13	0.80
PWTK2	40400315	Produced Water	Produced Water w/ Trace Oils	8.3	18.15	83.31	0.57	94.13	0.80
GBS1	31000506	Produced Water	Produced Water w/ Trace Oils	8.3	27.95	72.32	0.58	83.14	0.79
OTK7	40400311	Oil/Condensate	Oil/Condensate	6.6	50.25	83.30	10.20	94.12	11.90

Table 2-L: Tank Data

Include appropriate tank-flashing modeling input data. Use an addendum to this table for unlisted data categories. Unit and stack numbering must correspond throughout the application package. Use additional sheets if necessary. See reference Table 2-L2. Note: 1.00 bbl = 10.159 M3 = 42.0 gal

Tank No.	Date Installed	Materials Stored	Seal Type (refer to Table 2-LR below)	Roof Type (refer to Table 2-LR below)	Capacity		Diameter (M)	Vapor Space (M)	Color (from Table VI-C)		Paint Condition (from Table VI C)	Annual Throughput (gal/yr)	Turn-overs (per year)
					(bbl)	(M^3)			Roof	Shell			
IFR1	TBD	Oil/Condensate	C	IF	100,000	15,899	39.8	12.8	WH	WH	Good	766,500,000	183
IFR2	TBD	Oil/Condensate	C	IF	100,000	15,899	39.8	12.8	WH	WH	Good	766,500,000	183
IFR3	TBD	Oil/Condensate	C	IF	100,000	15,899	39.8	12.8	WH	WH	Good	766,500,000	183
IFR4	TBD	Oil/Condensate	C	IF	100,000	15,899	39.8	12.8	WH	WH	Good	766,500,000	183
OTK1	TBD	Oil/Condensate	NA	FX	2,000	318	7.6	7.3	WH	WH	Good	63,875,005	760
OTK2	TBD	Oil/Condensate	NA	FX	2,000	318	7.6	7.3	WH	WH	Good	63,875,005	760
OTK3	TBD	Oil/Condensate	NA	FX	2,000	318	7.6	7.3	WH	WH	Good	63,875,005	760
OTK4	TBD	Oil/Condensate	NA	FX	2,000	318	7.6	7.3	WH	WH	Good	63,875,005	760
OTK5	TBD	Oil/Condensate	NA	FX	2,000	318	7.6	7.3	WH	WH	Good	63,875,005	760
OTK6	TBD	Oil/Condensate	NA	FX	2,000	318	7.6	7.3	WH	WH	Good	63,875,005	760
PWTK1	TBD	Produced Water	NA	FX	750	119	4.7	7.3	WH	WH	Good	76,869,272	2440
PWTK2	TBD	Produced Water	NA	FX	750	119	4.7	7.3	WH	WH	Good	76,869,272	2440
GBS1	TBD	Produced Water	NA	FX	1,000	159	4.7	7.3	WH	WH	Good	153,738,543	3660
OTK7	TBD	Slop - Oil/Condensate	NA	FX	500	79.5	4.7	4.9	WH	WH	Good	31,895,360	1518.8

Table 2-L2: Liquid Storage Tank Data Codes Reference Table

Roof Type	Seal Type, Welded Tank Seal Type		Seal Type, Riveted Tank Seal Type		Roof, Shell Color	Paint Condition
FX: Fixed Roof	**Mechanical Shoe Seal**	**Liquid-mounted resilient seal**	**Vapor-mounted resilient seal**	**Seal Type**	**WH**: White	Good
IF: Internal Floating Roof	**A**: Primary only	**A**: Primary only	**A**: Primary only	**A**: Mechanical shoe, primary only	**AS**: Aluminum (specular)	Poor
EF: External Floating Roof	**B**: Shoe-mounted secondary	**B**: Weather shield	**B**: Weather shield	**B**: Shoe-mounted secondary	**AD**: Aluminum (diffuse)	
P: Pressure	**C**: Rim-mounted secondary	**C**: Rim-mounted secondary	**C**: Rim-mounted secondary	**C**: Rim-mounted secondary	**LG**: Light Gray	
					MG: Medium Gray	
					BL: Black	
					OT: Other (specify)	

Note: 1.00 bbl = 0.159 M^3 = 42.0 gal

Table 2-M: Materials Processed and Produced (Use additional sheets as necessary.)

Material Processed				Material Produced			
Description	**Chemical Composition**	**Phase (Gas, Liquid, or Solid)**	**Quantity (specify units)**	**Description**	**Chemical Composition**	**Phase**	**Quantity (specify units)**
Mixed Hydrocarbons	Oil/Condensate	Liquid (BOPD)	200000	Mixed Hydrocarbons	Oil/Condensate	Liquid (BOPD)	200000
	Produced Water	Liquid (BWPD)	10029		Produced Water	Liquid (BWPD)	10029
	Natural Gas	Gas (MMSCFD)	750		Natural Gas	Gas (MMSCFD)	750
	Natural Gas Liquids	Liquid (BOPD)	190000		Natural Gas Liquids	Liquid (BOPD)	190000

Table 2-N: CEM Equipment

Enter Continuous Emissions Measurement (CEM) Data in this table. If CEM data will be used as part of a federally enforceable permit condition, or used to satisfy the requirements of a state or federal regulation, include a copy of the CEM's manufacturer specification sheet in the Information Used to Determine Emissions attachment. Unit and stack numbering must correspond throughout the application package. Use additional sheets if necessary.

Stack No.	Pollutant(s)	Manufacturer	Model No.	Serial No.	Sample Frequency	Averaging Time	Range	Sensitivity	Accuracy
N/A									

Table 2-O: Parametric Emissions Measurement Equipment

Unit and stack numbering must correspond throughout the application package. Use additional sheets if necessary.

Unit No.	Parameter/Pollutant Measured	Location of Measurement	Unit of Measure	Acceptable Range	Frequency of Maintenance	Nature of Maintenance	Method of Recording	Averaging Time
N/A								

Table 2-P: Greenhouse Gas Emissions - WITH COGENERATION

Applications submitted under 20.2.70, 20.2.72, & 20.2.74 NMAC are required to complete this Table. Power plants, Title V major sources, and PSD major sources must report and calculate all GHG emissions for each unit. Applicants must report potential emission rates in short tons per year (see Section 6.a for assistance). Include GHG emissions during Startup, Shutdown, and Scheduled Maintenance in this table. For minor source facilities that are not power plants, are not Title V, or are not PSD, there are three options for reporting GHGs 1) report GHGs for each individual piece of equipment; 2) report all GHGs from a group of unit types, for example report all combustion source GHGs as a single unit and all venting GHG as a second separate unit; OR 3) check the following box ☐ By checking this box, the applicant acknowledges the total CO2e emissions are less than 75,000 tons per year.

		CO_2 ton/yr	N_2O ton/yr	CH_4 ton/yr	SF_6 ton/yr	PFC/HFC ton/yr[2]									**Total GHG** Mass Basis ton/yr[4]	**Total CO_2e** ton/yr[5]
Unit No.	**GWPs [1]**	**1**	**298**	**25**	**22,800**	**footnote 3**										
SHTR1-2	**mass GHG**	66444.03	0.13	1.25											66445	
	CO_2e	66444.03	37.32	31.31												66513
RHTR1-3	**mass GHG**	60171.66	0.11	1.13											60173	
	CO_2e	60171.66	33.79	28.35												60234
FL1-FL3	**mass GHG**	0.00	0.00	0.00											0	
	CO_2e	0.00	0.00	0.00												0
FL1-FL3OVHD-SSM	**mass GHG**	9440.64	0.00	0.01											9441	
	CO_2e	9440.64	0.00	0.13												9441
FL1-FL3CRYO-SSM	**mass GHG**	15205.58	0.00	57.87											15263	
	CO_2e	15205.58	0.00	1446.66												16652
IFR1-IFR4	**mass GHG**	0.00	0.00	0.00											0	
	CO_2e	0.00	0.00	0.00												0
OTK1-OTK6	**mass GHG**	Emissions represented at ECD1.														
	CO_2e															
ECD1	**mass GHG**	4244.35	0.00	0.00											4244	
	CO_2e	4244.35	0.00	0.02												4244
TO1	**mass GHG**	101384.48	0.00	6.91											101391	
	CO_2e	101384.48	0.00	172.82												101557
TO2	**mass GHG**	101384.48	0.00	6.91											101391	
	CO_2e	101384.48	0.00	172.82												101557
TO3	**mass GHG**	101384.48	0.00	6.91											101391	
	CO_2e	101384.48	0.00	172.82												101557
TUR1	**mass GHG**	543806.42	1.02	10.25											543818	
	CO_2e	543806.42	305.42	256.22												544368
TUR2	**mass GHG**	543806.42	1.02	10.25											543818	
	CO_2e	543806.42	305.42	256.22												544368
TUR3	**mass GHG**	543806.42	1.02	10.25											543818	
	CO_2e	543806.42	305.42	256.22												544368
TUR4	**mass GHG**	543806.42	1.02	10.25											543818	
	CO_2e	543806.42	305.42	256.22												544368

Table 2-P: Greenhouse Gas Emissions - WITH COGENERATION

Applications submitted under 20.2.70, 20.2.72, & 20.2.74 NMAC are required to complete this Table. Power plants, Title V major sources, and PSD major sources must report and calculate all GHG emissions for each unit. Applicants must report potential emission rates in short tons per year (see Section 6.a for assistance). Include GHG emissions during Startup, Shutdown, and Scheduled Maintenance in this table. For minor source facilities that are not power plants, are not Title V, or are not PSD, there are three options for reporting GHGs 1) report GHGs for each individual piece of equipment; 2) report all GHGs from a group of unit types, for example report all combustion source GHGs as a single unit and all venting GHG as a second separate unit; OR 3) check the following box ☐ By checking this box, the applicant acknowledges the total CO2e emissions are less than 75,000 tons per year.

		CO_2 ton/yr	N_2O ton/yr	CH_4 ton/yr	SF_6 ton/yr	PFC/HFC ton/yr[2]									**Total GHG** Mass Basis ton/yr[4]	**Total CO_2e** ton/yr[5]
Unit No.	**GWPs [1]**	**1**	**298**	**25**	**22,800**	**footnote 3**										
FUG	**mass GHG**	304.18	0.00	2.04											306.2	
	CO_2e	304.18	0.00	51.01												355.2
OTL	**mass GHG**	0.15	0.00	0.00											0.2	
	CO_2e	0.15	0.00	0.02												0.2
GEN1-GEN8	**mass GHG**	1255.78	0.00	0.02											1255.8	
	CO_2e	1255.78	0.55	0.46												1256.8
Total	**mass GHG**														2636574	
	CO_2e															2640840

[1] **GWP** (Global Warming Potential): Applicants must use the most current GWPs codified in Table A-1 of 40 CFR part 98. GWPs are subject to change, therefore, applicants need to check 40 CFR 98 to confirm GWP values.

[2] For **HFCs** or **PFCs** describe the specific HFC or PFC compound and use a separate column for each individual compound.

[3] For each new compound, enter the appropriate GWP for each HFC or PFC compound from Table A-1 in 40 CFR 98.

[4] Green house gas emissions on a **mass basis** is the ton per year green house gas emission before adjustment with its GWP.

[5] **CO_2e** means Carbon Dioxide Equivalent and is calculated by multiplying the TPY mass emissions of the green house gas by its GWP.

Table 2-P: Greenhouse Gas Emissions - WITHOUT COGENERATION

Applications submitted under 20.2.70, 20.2.72, & 20.2.74 NMAC are required to complete this Table. Power plants, Title V major sources, and PSD major sources must report and calculate all GHG emissions for each unit. Applicants must report potential emission rates in short tons per year (see Section 6.a for assistance). Include GHG emissions during Startup, Shutdown, and Scheduled Maintenance in this table. For minor source facilities that are not power plants, are not Title V, or are not PSD, there are three options for reporting GHGs 1) report GHGs for each individual piece of equipment; 2) report all GHGs from a group of unit types, for example report all combustion source GHGs as a single unit and all venting GHG as a second separate unit; OR 3) check the following box ☐ By checking this box, the applicant acknowledges the total CO2e emissions are less than 75,000 tons per year.

		CO_2 ton/yr	N_2O ton/yr	CH_4 ton/yr	SF_6 ton/yr	PFC/HFC ton/yr[2]									Total GHG Mass ton/yr[4]	Total CO_2e ton/yr[5]
Unit No.	**GWPs [1]**	**1**	**298**	**25**	**22,800**	**footnote 3**										
SHTR1-12	**mass GHG**	398664.18	0.75	7.51											398672.4	
	CO_2e	398664.18	223.90	187.84												399075.9
CHTR1-3	**mass GHG**	159868.46	0.30	3.01											159871.8	
	CO_2e	159868.46	89.79	75.32												160033.6
RHTR1-3	**mass GHG**	60171.66	0.11	1.13											60172.9	
	CO_2e	60171.66	33.79	28.35												60233.8
FL1-FL3	**mass GHG**	0.00	0.00	0.00											0.0	
	CO_2e	0.00	0.00	0.00												0.0
FL1-FL3OVHD-SSM	**mass GHG**	9440.64	0.00	0.01											9441	
	CO_2e	9440.64	0.00	0.13												9441
FL1-FL3CRYO-SSM	**mass GHG**	15205.58	0.00	57.87											15263	
	CO_2e	15205.58	0.00	1446.66												16652
IFR1-IFR4	**mass GHG**	0.00	0.00	0.00											0.0	
	CO_2e	0.00	0.00	0.00												0.0
OTK1-OTK6	**mass GHG**	Emissions represented at ECD1.														
	CO_2e															
ECD1	**mass GHG**	4244.35	0.00	0.00											4244.3	
	CO_2e	4244.35	0.00	0.02												4244.4
TO1	**mass GHG**	101384.48	0.00	6.91											101391.4	
	CO_2e	101384.48	0.00	172.82												101557.3
TO2	**mass GHG**	101384.48	0.00	6.91											101391.4	
	CO_2e	101384.48	0.00	172.82												101557.3
TO3	**mass GHG**	101384.48	0.00	6.91											101391.4	
	CO_2e	101384.48	0.00	172.82												101557.3
FUG	**mass GHG**	304.18	0.00	2.04											306.2	
	CO_2e	304.18	0.00	51.01												355.2
OTL	**mass GHG**	0.15	0.00	0.00											0.2	
	CO_2e	0.15	0.00	0.02												0.2
GEN1-GEN8	**mass GHG**	1255.78	0.00	0.02											1255.8	
	CO_2e	1255.78	0.55	0.46												1256.8
Total	**mass GHG**														953402	
	CO_2e															955965

[1] **GWP** (Global Warming Potential): Applicants must use the most current GWPs codified in Table A-1 of 40 CFR part 98. GWPs are subject to change, therefore, applicants need to check 40 CFR 98 to confirm GWP values

[2] For **HFCs** or **PFCs** describe the specific HFC or PFC compound and use a separate column for each individual compound.

[3] For each new compound, enter the appropriate GWP for each HFC or PFC compound from Table A-1 in 40 CFR 98.

[4] Green house gas emissions on a **mass basis** is the ton per year green house gas emission before adjustment with its GWP.

[5] **CO_2e** means Carbon Dioxide Equivalent and is calculated by multiplying the TPY mass emissions of the green house gas by its GWP.

Tab 3
Section 3 - Application Summary

Section 3

Application Summary

The **Application Summary** shall include a brief description of the facility and its process, the type of permit application, the applicable regulation (i.e. 20.2.72.200.A.X, or 20.2.73 NMAC) under which the application is being submitted, and any air quality permit numbers associated with this site. If this facility is to be collocated with another facility, provide details of the other facility including permit number(s). In case of a revision or modification to a facility, provide the lowest level regulatory citation (i.e. 20.2.72.219.B.1.d NMAC) under which the revision or modification is being requested. Also describe the proposed changes from the original permit, how the proposed modification will affect the facility's operations and emissions, de-bottlenecking impacts, and changes to the facility's major/minor status (both PSD & Title V).

The **Process Summary** shall include a brief description of the facility and its processes.

Startup, Shutdown, and Maintenance (SSM) routine or predictable emissions: Provide an overview of how SSM emissions are accounted for in this application. Refer to "Guidance for Submittal of Startup, Shutdown, Maintenance Emissions in Permit Applications (http://www.env.nm.gov/aqb/permit/app_form.html) for more detailed instructions on SSM emissions.

This application requests a permit to construct a natural gas processing and oil/natural gas liquid (NGL) central delivery point (CDP) located approximately 13.9 miles NE of Loving, NM in Eddy County in accordance with 20.2.72.200.A.1 NMAC. There are no existing permits associated with the proposed facility.

The facility is proposing three operating scenarios:

1) Operation of the facility with full CDP buildout without Cogen,
2) Operation of the facility with four Cogen turbines and reduced heater use,
3) A combination of turbines and heater use during turbine downtime.

In Scenario 3, the number of heaters required is dependent upon the number of Cogen units in operation. To account for this in Table 2-A, three versions of the table were included in Tab 2 as noted below:

- Table 2-A: Regulated Emission Sources (ALL EQUIPMENT FOR FULL CDP/COGEN BUILDOUT)
  - All equipment located onsite following construction of CDP and Cogen
- Table 2-A: Regulated Emission Sources (CDP BUILDOUT WITH NO TURBINES)
  - Oil handling facility without cogen
- Table 2-A: Regulated Emission Sources (4 TURBINES WITH 2 STABILIZERS)
  - Full Cogen buildout with reduced heater needs

A description of heaters to be operated for a given number of Cogen units is detailed in Section 15. One set of Tables 2-D and 2-E were completed for both Scenarios 1 and 2 above. Since all pollutant emission rates during Scenario 1 are greater than any other scenario and pollutant emission rates during Scenario 2 are less than any other scenario, completion of Tables 2-D and 2-E were not necessary.

The gas processing portion of the facility will process natural gas using amine sweetening units. Sweetened gas will be dehydrated then flow to cryogenic units to remove NGLs for sale. Heat for the dehydration and cryogenic processes is supplied by gas-fired auxiliary heaters. NGLs from the inlet slug catcher and surrounding compressor stations are stabilized before being transferred offsite via pipeline. Heat for the stabilization process is supplied by gas-fired auxiliary heaters. The central delivery point portion of the facility will receive up to 200,000 barrels of oil/condensate (oil) per day from surrounding field production batteries. Oil will be transferred directly to storage or stabilized using auxiliary heaters. Oil is transferred offsite via pipeline. Incoming water will be temporarily stored onsite prior to being transferred offsite via pipeline. Water and slop oil can be transferred offsite by truck. The Cogen portion of the facility will be used to generate power for the site and replace process heat provided by the heaters.

SSM emissions from equipment maintenance are routed to either the low pressure or high pressure flare header (FL1/FL2/FL3). SSM-related VOC emissions (tank landings/cleanings) are included at a rate of 10 tons per year per NMAQB guidance. Detailed calculations are included in the application.

Tab 4
Section 4 - Process Flow Sheet

Section 4

Process Flow Sheet

A **process flow sheet** and/or block diagram indicating the individual equipment, all emission points and types of control applied to those points. The unit numbering system should be consistent throughout this application.

A process flow diagram is presented on the following page.

HUSKY CDP PROCESS FLOW

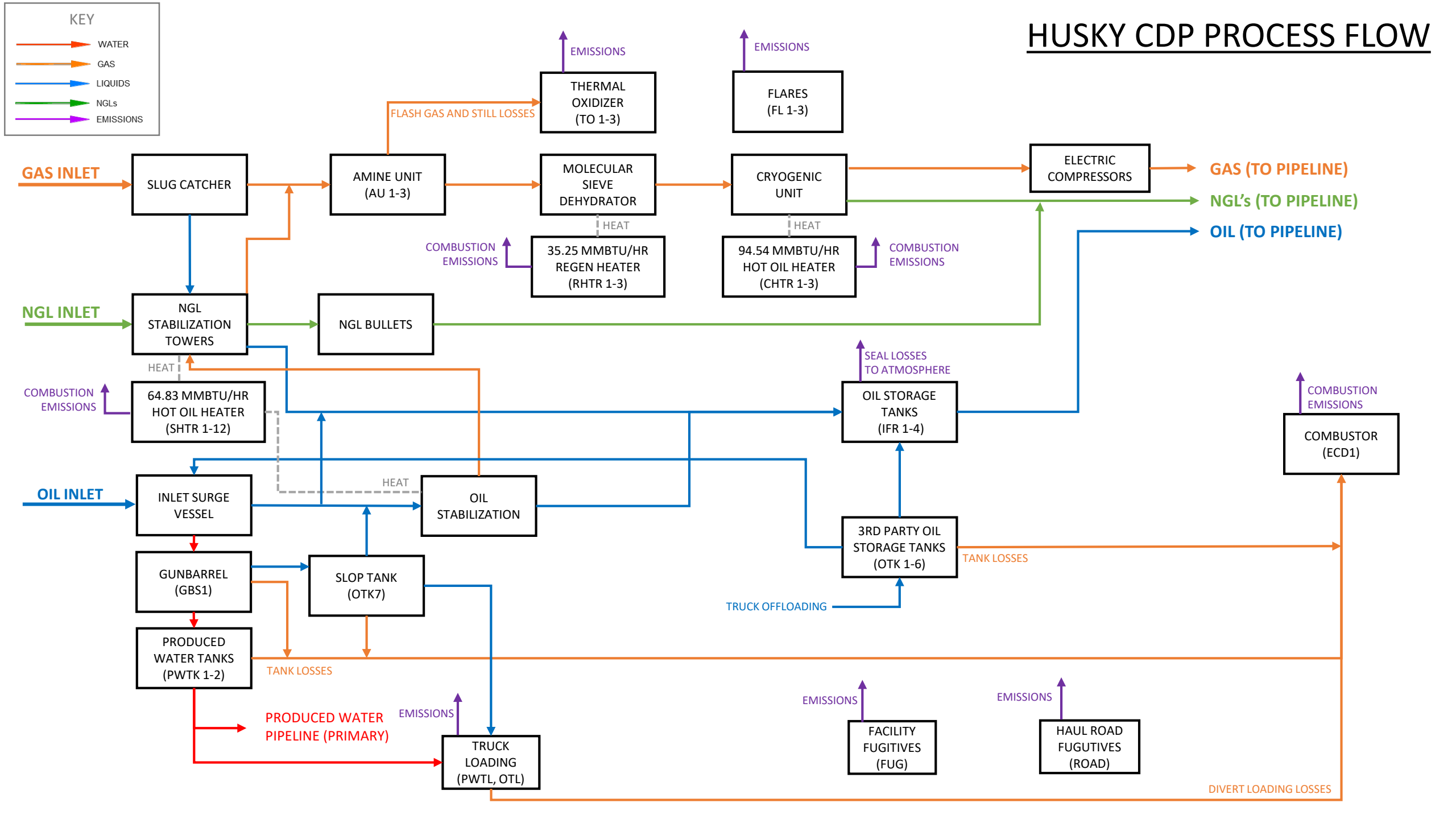

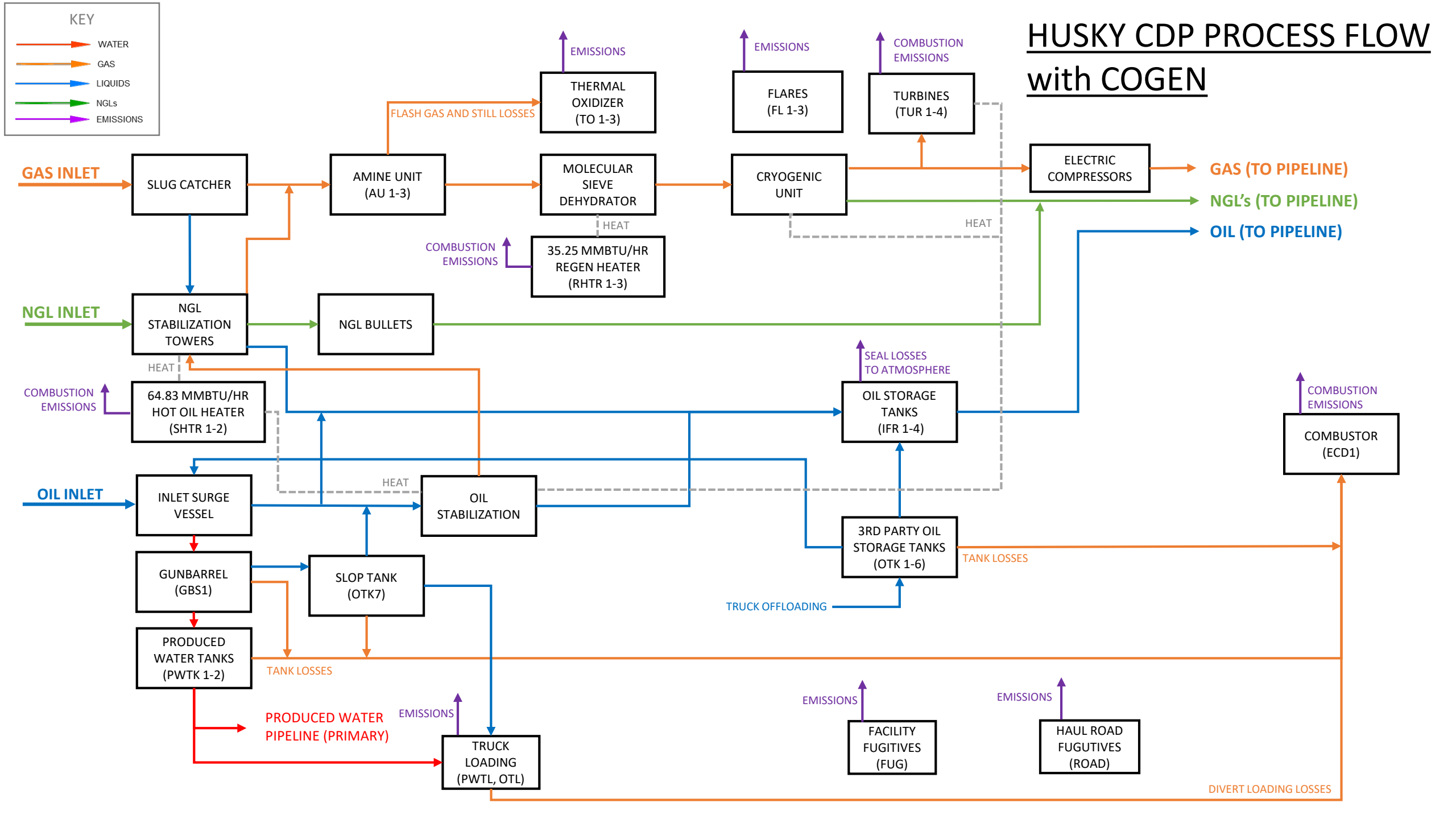
KEY
WATER
GAS
LIQUIDS
NGLs
EMISSIONS
HUSKY CDP PROCESS FLOW with COGEN
GAS INLET
SLUG CATCHER
AMINE UNIT (AU 1-3)
FLASH GAS AND STILL LOSSES
THERMAL OXIDIZER (TO 1-3)
EMISSIONS
MOLECULAR SIEVE DEHYDRATOR
HEAT
35.25 MMBTU/HR REGEN HEATER (RHTR 1-3)
COMBUSTION EMISSIONS
CRYOGENIC UNIT
FLARES (FL 1-3)
EMISSIONS
TURBINES (TUR 1-4)
COMBUSTION EMISSIONS
ELECTRIC COMPRESSORS
GAS (TO PIPELINE)
NGL's (TO PIPELINE)
OIL (TO PIPELINE)
HEAT
NGL INLET
NGL STABILIZATION TOWERS
NGL BULLETS
HEAT
COMBUSTION EMISSIONS
64.83 MMBTU/HR HOT OIL HEATER (SHTR 1-2)
SEAL LOSSES TO ATMOSPHERE
OIL STORAGE TANKS (IFR 1-4)
COMBUSTION EMISSIONS
COMBUSTOR (ECD1)
OIL INLET
INLET SURGE VESSEL
HEAT
OIL STABILIZATION
3RD PARTY OIL STORAGE TANKS (OTK 1-6)
TANK LOSSES
TRUCK OFFLOADING
GUNBARREL (GBS1)
SLOP TANK (OTK7)
PRODUCED WATER TANKS (PWTK 1-2)
TANK LOSSES
PRODUCED WATER PIPELINE (PRIMARY)
EMISSIONS
TRUCK LOADING (PWTL, OTL)
EMISSIONS
FACILITY FUGITIVES (FUG)
EMISSIONS
HAUL ROAD FUGUTIVES (ROAD)
DIVERT LOADING LOSSES

Tab 5
Section 5 - Plot Plan Drawn To Scale

Section 5

Plot Plan Drawn To Scale

A **plot plan drawn to scale** showing emissions points, roads, structures, tanks, and fences of property owned, leased, or under direct control of the applicant. This plot plan must clearly designate the restricted area as defined in UA1, Section 1-D.12. The unit numbering system should be consistent throughout this application.

A proposed plot plan is presented on the following page.

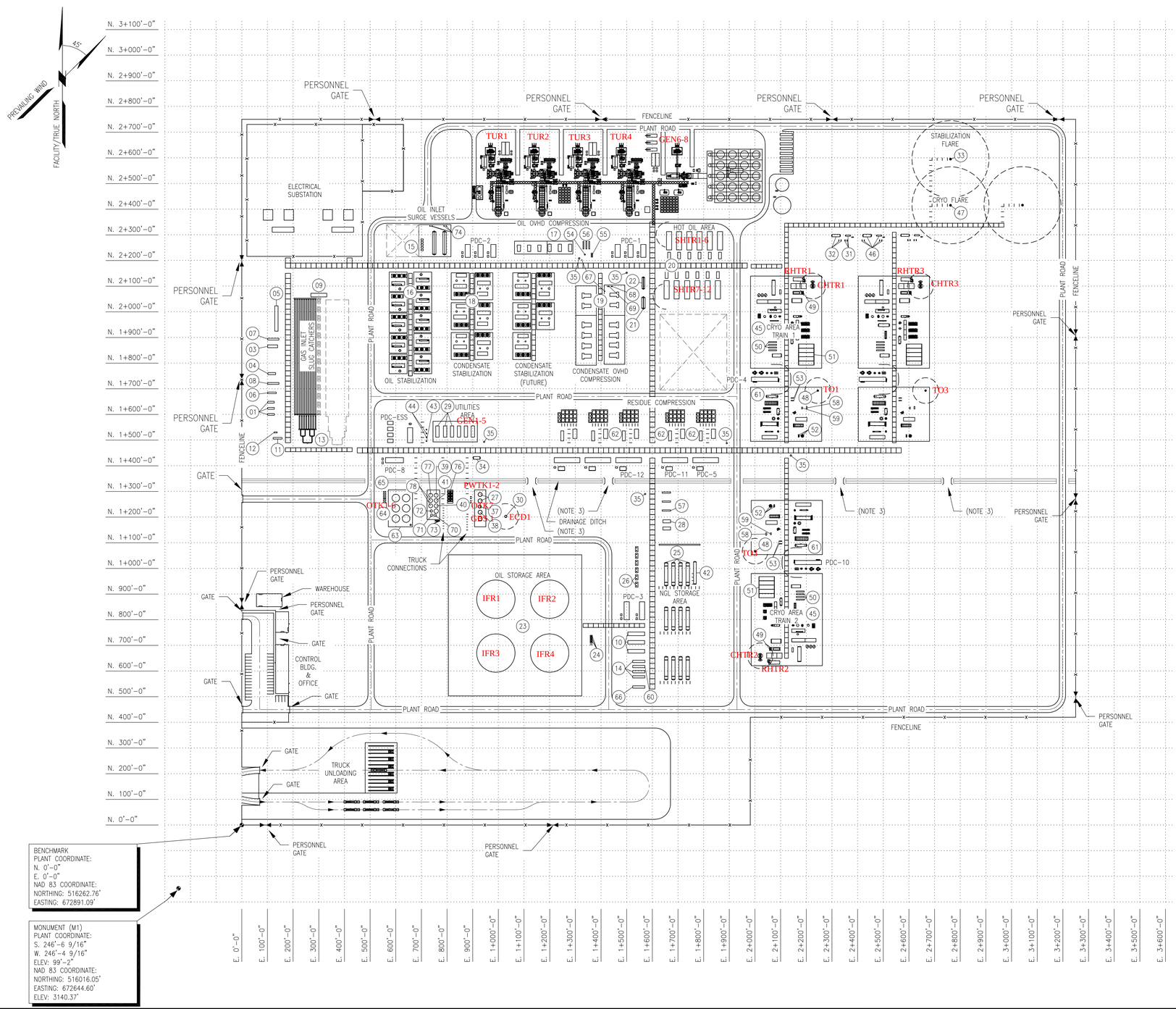

EQUIPMENT LIST	
01	ITEM NUMBER NOT USED
02	ITEM NUMBER NOT USED
03	6" NORTH NGL INLET METER SKID
04	6" SOUTH NGL INLET METER SKID
05	20" NORTH OIL INLET METER SKID
06	12" SOUTH OIL INLET METER SKID
07	10" NORTH FUEL GAS METER SKID
08	6" SOUTH FUEL GAS METER SKID
09	CONDENSATE INLET METERING SKID
10	Y-GRADE OUTLET METER SKID
11	PRODUCED WATER METER SKID
12	FRESH WATER INLET METER
13	GAS INLET SLUG CATCHER
14	RESIDUE GAS METER SKID
15	OIL INLET SURGE VESSELS & PUMPS
16	OIL STABILIZER PACKAGES
17	OIL STABILIZER OVERHEAD COMPRESSOR PACKAGE
18	CONDENSATE STABILIZER PACKAGE
19	CONDENSATE STABILIZER OVERHEAD GAS COMPRESSOR PACKAGE
20	STABILIZER HOT OIL PACKAGES/PUMPS/BURNERS
21	CONDENSATE STABILIZER HOT OIL EXPANSION VESSEL
22	OIL STABILIZATION HOT OIL EXPANSION VESSEL
23	OIL STORAGE TANKS
24	OIL OUTLET PUMPS
25	NGL BULLETS
26	NGL PIPELINE PUMPS
27	PRODUCED WATER TANKS & PUMPS
28	FUEL GAS SKID
29	INSTRUMENT AIR PACKAGE
30	COMBUSTOR W/ K.O. DRUM, PUMP & PILOT GAS SKID
31	LP FLARE K.O. DRUM & PUMPS
32	HP FLARE K.O. DRUM & PUMPS
33	FLARE STACK
34	CLOSED DRAIN DRUM
35	OPEN DRAIN SUMPS & PUMPS
36	ITEM NUMBER NOT USED
37	SLOP OIL TANK & PUMPS
38	GUNBARREL TANK
39	UTILITY WATER TANK & UTILITY WATER CHARGE PUMPS
40	WATER MAKE-UP TANK & PUMP
41	AMINE MAKE-UP TANK & PUMP
42	PROPANE MAKE-UP TANK
43	UTILITY AIR RECEIVER
44	INSTRUMENT AIR RECEIVER
45	CRYO PACKAGE
46	CRYO TRAIN 1, 2 LP & HP FLARE K.O. DRUM & PUMPS
47	CRYO TRAIN 1 & 2 FLARE STACK
48	THERMAL OXIDIZER & FUEL RACK/SKID
49	CRYO HOT OIL PACKAGE (PUMPS & BURNER SKID)
50	CRYO NGL PIPELINE PUMPS
51	CRYO NGL COOLER
52	CRYO RICH GAS SCRUBBER & PUMPS
53	RSV RECYCLE FILTER COALESCER
54	OIL OVERHEAD COMPRESSOR CONDENSATE SEPARATOR
55	OIL OVERHEAD COMPRESSOR CONDENSATE BOOSTER PUMPS
56	OIL OVERHEAD COMPRESSOR CONDENSATE PUMPS
57	RESIDUE GAS FILTER COALESCER
58	ACID GAS SCRUBBERS & PUMPS
59	AMINE FLASH GAS SCRUBBER & PUMPS
60	BUY BACK GAS METERING SKID

EQUIPMENT LIST	
61	ANTI-FOAMING INJECTION SKID
62	RESIDUE GAS COMPRESSION PACKAGE
63	3RD PARTY OIL TANKS
64	3RD PARTY OIL ACT
65	CHEMICAL INJECTION SKID
66	20" OIL EXPORT METERING SKID
67	WASTE OIL SUMP & PUMP
68	CASING LUBE OIL DAY TANKS
69	CYLINDER LUBE OIL DAY TANK
70	BULK CASING LUBE OIL TANK & PUMP
71	BULK CYLINDER LUBE OIL TANK & PUMP
72	WASTE LUBE OIL TANK
73	OIL TANK AFFF SYSTEM
74	SEPARATED WATER PUMPS
75	ITEM NUMBER NOT USED
76	WATER TREATMENT PACKAGE
77	AFFF DELUGE WATER TANK & PUMP
78	RAW WATER TANKS & CHRAGE PUMPS

NOTES

1. PLANT ELEVATION REFERENCE 100'-0" = 3141.20' REAL WORLD ELEVATION.
2. EQUIPMENT SIZES ARE PRELIMINARY AND ARE SUBJECTED TO CHANGE UPON DETAIL ENGINEERING.
3. VEHICLE ACCESS POINT.

REFERENCE DRAWINGS

DWG. NO.	DESCRIPTION
–	–

REVISIONS

REV.	DESCRIPTION	DRWN	CHKD	APPRV	DATE
E	RE-ISSUED FOR DESIGN	JLM	VY	TC	08/14/19
D	ISSUED FOR DESIGN	JLM	AM	TC	05/02/19
C	ISSUED FOR HAZOP	JLM	CM	TC	02/28/19
B	ISSUED FOR APPROVAL	JLM	CM	TC	01/30/19
A	PRELIMINARY	CV	CM	TC	09/26/18

PROJECT INFO.

DRAWN BY	CV
DATE	9/26/18
AEC JOB NO.	01914100
AFE/P.O. NO.	
CLIENT FILE NO.	
SCALE	1"=200'

audubon Engineering
10205 WESTHEIMER ROAD
SUITE 100
HOUSTON, TX 77042
PHONE: (281) 669-0590

XTO ENERGY

PLOT PLAN
OVERALL FACILITY
HUSKY CENTRAL DELIVERY POINT
EDDY COUNTY NEW MEXICO

DWG. NO. HK-0300
REV. E

NOTICE: THIS DOCUMENT IS SOLELY FOR THE USE OF THE CONTRACTUAL CLIENT AND AUDUBON AND ITS AFFILIATES (AUDUBON). AUDUBON ASSUMES NO LIABILITY TO ANY OTHER PARTY FOR ANY REPRESENTATIONS CONTAINED IN THIS DOCUMENT.

Drawing name: S:\AE\Projects\XTO\Husky_CDP\191411-001\300_Mechanical\170_Drawings\01_CAD\AE PERMIT\04 XTO HUSKY AIR PERMIT - WITH CODES - 3 TRAINS.dwg
Plotted on: Oct 10, 2019 - 2:25pm

Tab 6
Section 6 - All Calculations

Section 6

All Calculations

Show all calculations used to determine both the hourly and annual controlled and uncontrolled emission rates. All calculations shall be performed keeping a minimum of three significant figures. Document the source of each emission factor used (if an emission rate is carried forward and not revised, then a statement to that effect is required). If identical units are being permitted and will be subject to the same operating conditions, submit calculations for only one unit and a note specifying what other units to which the calculations apply. All formulas and calculations used to calculate emissions must be submitted. The "Calculations" tab in the UA2 has been provided to allow calculations to be linked to the emissions tables. Add additional "Calc" tabs as needed. If the UA2 or other spread sheets are used, all calculation spread sheet(s) shall be submitted electronically in Microsoft Excel compatible format so that formulas and input values can be checked. Format all spread sheets and calculations such that the reviewer can follow the logic and verify the input values. Define all variables. If calculation spread sheets are not used, provide the original formulas with defined variables. Additionally, provide subsequent formulas showing the input values for each variable in the formula. All calculations, including those calculations are imbedded in the Calc tab of the UA2 portion of the application, the printed Calc tab(s), should be submitted under this section.

Tank Flashing Calculations: The information provided to the AQB shall include a discussion of the method used to estimate tank-flashing emissions, relative thresholds (i.e., NOI, permit, or major source (NSPS, PSD or Title V)), accuracy of the model, the input and output from simulation models and software, all calculations, documentation of any assumptions used, descriptions of sampling methods and conditions, copies of any lab sample analysis. If Hysis is used, all relevant input parameters shall be reported, including separator pressure, gas throughput, and all other relevant parameters necessary for flashing calculation.

SSM Calculations: It is the applicant's responsibility to provide an estimate of SSM emissions or to provide justification for not doing so. In this Section, provide emissions calculations for Startup, Shutdown, and Routine Maintenance (SSM) emissions listed in the Section 2 SSM and/or Section 22 GHG Tables and the rational for why the others are reported as zero (or left blank in the SSM/GHG Tables). Refer to "Guidance for Submittal of Startup, Shutdown, Maintenance Emissions in Permit Applications (http://www.env.nm.gov/aqb/permit/app_form.html) for more detailed instructions on calculating SSM emissions. If SSM emissions are greater than those reported in the Section 2, Requested Allowables Table, modeling may be required to ensure compliance with the standards whether the application is NSR or Title V. Refer to the Modeling Section of this application for more guidance on modeling requirements.

Glycol Dehydrator Calculations: The information provided to the AQB shall include the manufacturer's maximum design recirculation rate for the glycol pump. If GRI-Glycalc is used, the full input summary report shall be included as well as a copy of the gas analysis that was used.

Road Calculations: Calculate fugitive particulate emissions and enter haul road fugitives in Tables 2-A, 2-D and 2-E for:

1. If you transport raw material, process material and/or product into or out of or within the facility and have PER emissions greater than 0.5 tpy.
2. If you transport raw material, process material and/or product into or out of the facility more frequently than one round trip per day.

Significant Figures:
A. All emissions standards are deemed to have at least two significant figures, but not more than three significant figures.
B. At least 5 significant figures shall be retained in all intermediate calculations.
C. In calculating emissions to determine compliance with an emission standard, the following rounding off procedures shall be used:

(1) If the first digit to be discarded is less than the number 5, the last digit retained shall not be changed;
(2) If the first digit discarded is greater than the number 5, or if it is the number 5 followed by at least one digit other than the number zero, the last figure retained shall be increased by one unit; **and**
(3) If the first digit discarded is exactly the number 5, followed only by zeros, the last digit retained shall be rounded upward if it is an odd number, but no adjustment shall be made if it is an even number.
(4) The final result of the calculation shall be expressed in the units of the standard.

Control Devices: In accordance with 20.2.72.203.A(3) and (8) NMAC, 20.2.70.300.D(5)(b) and (e) NMAC, and 20.2.73.200.B(7) NMAC, the permittee shall report all control devices and list each pollutant controlled by the control device

regardless if the applicant takes credit for the reduction in emissions. The applicant can indicate in this section of the application if they chose to not take credit for the reduction in emission rates. For notices of intent submitted under 20.2.73 NMAC, only uncontrolled emission rates can be considered to determine applicability unless the state or federal Acts require the control. This information is necessary to determine if federally enforceable conditions are necessary for the control device, and/or if the control device produces its own regulated pollutants or increases emission rates of other pollutants.

Hot Oil Heaters (SHTR1 – SHTR12, CHTR1 – CHTR3, RHTR1 – RHTR3)
The facility will be equipped with twelve (12) 64.83 Million British Thermal units per hour (MMbtu/hr) burners used for heating units in oil & NGL stabilization, three (3) 103.99 MMbtu/hr burners used for natural gas cryogenic heaters, and three (3) 39.14 MMbtu/hr burners used for amine regeneration. The heaters generate emissions of nitrogen oxides (NOx), carbon dioxide (CO), volatile organic compounds (VOC), sulfur dioxide (SO2), and Particulate Matter (PM). NOx, CO and VOC emissions were calculated using manufacturer's guaranteed exhaust concentrations. PM, hazardous air pollutants (HAPs), and SO2 emissions were calculated using emission factors from AP-42 Section 1.4 for natural gas combustion. All burner calculations assume operation at the maximum design heat input rating. Supporting manufacturer documentation is provided in Section 7.

Thermal Oxidizers (TO1 – TO3)
Thermal oxidizers (TO) will be used to control vapors from the amine flash vessels and acid gas from the amine still reflux accumulators. Speciated VOC, SO2 and HAP emissions associated with the flash vessels and still vents were calculated using Bryan Research and Engineering's (BR&E) Promax simulation software (see simulation report in Section 7). The ProMax simulation for each amine flash vessel and still vent was designed to simulate emissions at the maximum design gas throughput of 250 Million standard cubic feet per day (MMscfd) per cryo train and maximum design amine recirculation pump rates of 600 standard gallons per minute (sgpm). To be conservative, total HAP emissions were calculated assuming that the total molar concentration of hydrocarbon components that are hexanes or heavier (C6+) is equal to the molar concentration of each individual HAP component. A manufacturer guaranteed destruction efficiency of 99% was used for the TO. Emissions of NOx and CO from the TOs were calculated using manufacturer's guaranteed exhaust concentrations. PM emissions from TO combustion were calculated using AP-42 Section 1.4. Supporting manufacturer documentation is provided in Section 7.

SSM/Emergency Flares (FL1 – FL3)
The facility will be equipped with three (3) start, shutdown, and maintenance (SSM) activity/emergency dual-tip flares. NOx and CO emissions were calculated using emission factors from the Texas Commission on environmental Quality (TCEQ) publication RG-360A/09. VOC emission were calculated using a material balance and the manufacturer's guaranteed destruction efficiency. Emissions from each dual-tip flare were calculated to include a constant pilot fuel rate of 250 standard cubic feet per hour (scfh) and constant purge gas rates through the low pressure and high pressure header systems of 4,000 and 5,000 scfh, respectively. The flares have a control efficiency of 98%, with manufacturer documentation provided in Section 7 of the application.

SSM activities to the dual-tip flares could include process vessel purging and maintenance blowdowns for process equipment associated with the oil and NGL stabilization and the natural gas processing cryo trains. A maximum hourly SSM gas rate to any of the dual-tip flares of 187,500 scfh was included in the calculations for a maximum of 2 hours per day for 182 days per year for stabilizer overhead blowdowns. A separate maximum hourly SSM gas rate to the any of the dual-tip flares of 600,000 scfh was included for a maximum of 2 hours per day for 182 days per year for natural gas cryo train equipment blowdowns. For permitting purposes, the total SSM rate established for each SSM event is intended to represent one total limit for all three flares and overhead blowdowns cannot occur within a 24 hour period of cryo train equipment blowdowns.

Combustor (ECD1)
An enclosed combustor will control flashing, working, and breathing losses from the gunbarrel separator and fixed roof tanks, as well as the displaced vapors from truck loading operations from the slop oil tank. Emissions of NOx and CO from the Combustor were calculated using manufacturer's guaranteed exhaust concentrations. VOC emissions were calculated using speciated streams determined from BR&E ProMax software and the manufacturer's guaranteed destruction efficiency of 99%. A constant pilot gas fuel rate of 250 scfh is included in the emission calculations for the combustor. Supporting manufacturer documentation is provided in Section 7.

Oil Storage Tanks (IFR1 – IFR4, OTK1 – OTK7, PWTK1 – PWTK2)
Flashing, working and breathing emissions from the four (4) internal floating roof (IFR) crude oil tanks, six (6) fixed roof crude oil storage tanks, one (1) slop oil tank, and two (2) fixed roof produced water storage tanks were calculated using BR&E ProMax simulation software. Maximum liquid throughput is 200,000 barrels of oil per day (BOPD) for the IFR tanks, 25,000 BOPD for the fixed roof tanks, 2,000 BOPD for the slop oil tank, and 10,000 barrels of water per day (BWPD) for the produced water tanks. Emissions from the fixed roof crude oil tanks and produced water tanks will be controlled by ECD1. The simulation reports' details and summaries are included in Section 7.

Truck Loading (OTL, PWTL)
Uncontrolled emissions from crude oil and produced water loading of trucks were calculated using Equation 1 of AP-42 Section 5.2. Maximum slop oil loading rates are calculated at 210 BOPD. Relevant portions of AP-42 Section 5.2 are included in Section 7. Slop oil truck loading will be controlled by ECD1.

Piping Component Fugitive Emissions (FUG)
Facility fugitive emissions were calculated using TCEQ's "Air Permit Technical Guidance for Chemical Sources – Fugitive Guidance" document, and conservatively assumed component counts. Reduction efficiencies were obtained from EPA's Protocol for Equipment Leak Emission Estimates (EPA-453/R-95-017). Relevant portions of the TCEQ document are included in Section 7.

Startup, Shutdown, and Maintenance
Startup, shutdown, and maintenance (SSM) emissions not routed to the flare system were assumed equal to the flat 10 tpy of VOC per State guidance. Specific SSM emissions include small equipment blowdowns, tank emptying and refilling, tank roof landing, and miscellaneous activities. Other SSM emissions are routed to the flare and calculated in accordance with the flare methodology above.

Haul Road Fugitive Emissions
Fugitive haul road emissions were calculated using Equations 1a and 2 of AP-42 Section 13.2.2. Relevant portions of AP-42 Section 13.2.2 are included in Section 7.

Cogeneration Gas Turbines (TUR1-TUR4)
The cogeneration gas turbines can operate with duct-firing, which allows the turbines to generate additional heat and power. Gas turbine emissions assume duct-firing operation for 8760 hours per year in order to be conservative. NOx, VOC, PM and CO emission rates for the turbines are based on vendor-supplied concentrations. SO2 and HAPs are calculated using AP-42 Section 1.4 for emissions associated with duct-firing and are calculated using AP-42 Section 3.1 for emissions associated with stationary gas turbines. Supporting manufacturer documentation is provided in Section 7.

Emergency Generators (GEN1-GEN8)
Emission factors for NOx, CO, formaldehyde, and VOC are based on manufacturer's data. Emission rates TSP, PM_{10}, and $PM_{2.5}$ were calculated using AP-42 Table 3.2-3 emission factors. PM_{10} and $PM_{2.5}$ emissions are set equal to TSP emissions as a conservative measure. SO_2 emissions were calculated based on the units' fuel consumption and a maximum sulfur content of 0.75 grains per 100 standard cubic feet (0.75 gr/100 scf). Hazardous Air Pollutants (HAPs) except for formaldehyde were calculated using AP-42 factors. Annual operation was assumed to be 100 hours per generator. Only one (1) generator will be tested at a time and only three (3) generators will operate during any power outage.

* For the summary of emissions tables for each scenario (CONTROLLED FACILITY EMISSIONS SUMMARY - COGENERATION OPERATING SCENARIO and CONTROLLED FACILITY EMISSIONS SUMMARY - WITHOUT COGEN), as well as Table 2E totals, the hourly emission rates include different process streams depending on which stream has the higher emission rate. This methodology was chosen since there are certain streams that cannot occur at the same time. The two flare SSM streams cannot occur at the same time and the emergency generators cannot occur at the same time as either SSM scenario.

Section 6.a

Green House Gas Emissions

(Submitting under 20.2.70, 20.2.72 20.2.74 NMAC)

Title V (20.2.70 NMAC), Minor NSR (20.2.72 NMAC), and PSD (20.2.74 NMAC) applicants must estimate and report greenhouse gas (GHG) emissions to verify the emission rates reported in the public notice, determine applicability to 40 CFR 60 Subparts, and to evaluate Prevention of Significant Deterioration (PSD) applicability. GHG emissions that are subject to air permit regulations consist of the sum of an aggregate group of these six greenhouse gases: carbon dioxide (CO_2), nitrous oxide (N_2O), methane (CH_4), hydrofluorocarbons (HFCs), perfluorocarbons (PFCs), and sulfur hexafluoride (SF_6).

Calculating GHG Emissions:

1. Calculate the ton per year (tpy) GHG mass emissions and GHG CO_2e emissions from your facility.
2. GHG mass emissions are the sum of the total annual tons of greenhouse gases without adjusting with the global warming potentials (GWPs). GHG CO_2e emissions are the sum of the mass emissions of each individual GHG multiplied by its GWP found in Table A-1 in 40 CFR 98 Mandatory Greenhouse Gas Reporting.
3. Emissions from routine or predictable start up, shut down, and maintenance must be included.
4. Report GHG mass and GHG CO_2e emissions in Table 2-P of this application. Emissions are reported in **short** tons per year and represent each emission unit's Potential to Emit (PTE).
5. All Title V major sources, PSD major sources, and all power plants, whether major or not, must calculate and report GHG mass and CO2e emissions for each unit in Table 2-P.
6. For minor source facilities that are not power plants, are not Title V, and are not PSD there are three options for reporting GHGs in Table 2-P: 1) report GHGs for each individual piece of equipment; 2) report all GHGs from a group of unit types, for example report all combustion source GHGs as a single unit and all venting GHGs as a second separate unit; 3) or check the following ☐ By checking this box, the applicant acknowledges the total CO2e emissions are less than 75,000 tons per year.

Sources for Calculating GHG Emissions:

- Manufacturer's Data
- AP-42 Compilation of Air Pollutant Emission Factors at http://www.epa.gov/ttn/chief/ap42/index.html
- EPA's Internet emission factor database WebFIRE at http://cfpub.epa.gov/webfire/
- 40 CFR 98 Mandatory Green House Gas Reporting except that tons should be reported in short tons rather than in metric tons for the purpose of PSD applicability.
- API Compendium of Greenhouse Gas Emissions Methodologies for the Oil and Natural Gas Industry. August 2009 or most recent version.
- Sources listed on EPA's NSR Resources for Estimating GHG Emissions at http://www.epa.gov/nsr/clean-air-act-permitting-greenhouse-gases:

Global Warming Potentials (GWP):
Applicants must use the Global Warming Potentials codified in Table A-1 of the most recent version of 40 CFR 98 Mandatory Greenhouse Gas Reporting. The GWP for a particular GHG is the ratio of heat trapped by one unit mass of the GHG to that of one unit mass of CO_2 over a specified time period.

"Greenhouse gas" for the purpose of air permit regulations is defined as the aggregate group of the following six gases: carbon dioxide, nitrous oxide, methane, hydrofluorocarbons, perfluorocarbons, and sulfur hexafluoride. **(20.2.70.7 NMAC, 20.2.74.7 NMAC).** You may also find GHGs defined in 40 CFR 86.1818-12(a).

Metric to Short Ton Conversion:
Short tons for GHGs and other regulated pollutants are the standard unit of measure for PSD and title V permitting programs. 40 CFR 98 Mandatory Greenhouse Reporting requires metric tons.
1 metric ton = 1.10231 short tons (per Table A-2 to Subpart A of Part 98 – Units of Measure Conversions)

XTO ENERGY INC.

HUSKY CDP

UNCONTROLLED FACILITY EMISSIONS SUMMARY - COGENERATION OPERATING SCENARIO

UNCONTROLLED EMISSIONS SUMMARY TABLE

EMISSION SOURCE DESCRIPTION	FACILITY IDENTIFICATION NUMBER	STACK NUMBER	NOx		CO		VOC (INCLUDES HAPs)		SO_2		TSP		$PM_{10\ \&\ 2.5}$		HAPs	
			lb/hr	TPY	lb/hr	TPY	lb/hr	TPY	lb/hr	TPY	lb/hr	TPY	lb/hr	TPY	lb/hr	TPY
Stabilization Hot Oil Heater (64.83 MMBtu/hr)	SHTR1	SHTR1	1.73	7.58	1.06	4.63	0.41	1.82	0.14	0.63	0.48	2.12	0.48	2.12	0.12	0.52
Stabilization Hot Oil Heater (64.83 MMBtu/hr)	SHTR2	SHTR2	1.73	7.58	1.06	4.63	0.41	1.82	0.14	0.63	0.48	2.12	0.48	2.12	0.12	0.52
Regen Heater (39.14 MMBtu/hr)	RHTR1	RHTR1	1.05	4.58	0.64	2.79	0.25	1.10	0.09	0.38	0.29	1.28	0.29	1.28	0.07	0.32
Regen Heater (39.14 MMBtu/hr)	RHTR2	RHTR2	1.05	4.58	0.64	2.79	0.25	1.10	0.09	0.38	0.29	1.28	0.29	1.28	0.07	0.32
Regen Heater (39.14 MMBtu/hr)	RHTR3	RHTR3	1.05	4.58	0.64	2.79	0.25	1.10	0.09	0.38	0.29	1.28	0.29	1.28	0.07	0.32
Flare 1 (Dual Tip Flare) - Pilot/Purge Only	FL1-FL3[1]	FL1-FL3[1]	Not operating in uncontrolled emissions scenario.													
Flare 2 (Dual Tip Flare) - Pilot/Purge Only			Not operating in uncontrolled emissions scenario.													
Backup SSM/Emergency Flare (Dual Tip Flare) - Pilot/Purge Only			Not operating in uncontrolled emissions scenario.													
FL1-FL3 Stabilizer Overhead SSM Gas	CHTR3	FL1-FL3	Not operating in uncontrolled emissions scenario.													
FL1-FL3 Cryo Blowdown SSM Gas	RHTR1	FL1-FL3	Not operating in uncontrolled emissions scenario.													
Oil Storage 1 (100,000 bbl)	IFR1	IFR1	--	--	--	--	1.18	5.15	--	--	--	--	--	--	0.07	0.30
Oil Storage 2 (100,000 bbl)	IFR2	IFR2	--	--	--	--	1.18	5.15	--	--	--	--	--	--	0.07	0.30
Oil Storage 3 (100,000 bbl)	IFR3	IFR3	--	--	--	--	1.18	5.15	--	--	--	--	--	--	0.07	0.30
Oil Storage 4 (100,000 bbl)	IFR4	IFR4	--	--	--	--	1.18	5.15	--	--	--	--	--	--	0.07	0.30
3rd-Party Oil Storage 1	OTK1	OTK1	--	--	--	--	25.09	109.91	--	--	--	--	--	--	--	--
3rd-Party Oil Storage 2	OTK2	OTK2	--	--	--	--	25.09	109.91	--	--	--	--	--	--	--	--
3rd-Party Oil Storage 3	OTK3	OTK3	--	--	--	--	25.09	109.91	--	--	--	--	--	--	--	--
3rd-Party Oil Storage 4	OTK4	OTK4	--	--	--	--	25.09	109.91	--	--	--	--	--	--	--	--
3rd-Party Oil Storage 5	OTK5	OTK5	--	--	--	--	25.09	109.91	--	--	--	--	--	--	--	--
3rd-Party Oil Storage 6	OTK6	OTK6	--	--	--	--	25.09	109.91	--	--	--	--	--	--	--	--
Combustor	ECD1	ECD1	Not operating in uncontrolled emissions scenario.													
Thermal Oxidizer	TO1	TO1	Not operating in uncontrolled emissions scenario.													

XTO ENERGY INC.

HUSKY CDP

UNCONTROLLED FACILITY EMISSIONS SUMMARY - COGENERATION OPERATING SCENARIO

UNCONTROLLED EMISSIONS SUMMARY TABLE

EMISSION SOURCE DESCRIPTION	FACILITY IDENTIFICATION NUMBER	STACK NUMBER	NOx		CO		VOC (INCLUDES HAPs)		SO_2		TSP		$PM_{10\ \&\ 2.5}$		HAPs	
			lb/hr	TPY	lb/hr	TPY	lb/hr	TPY	lb/hr	TPY	lb/hr	TPY	lb/hr	TPY	lb/hr	TPY
Thermal Oxidizer	TO2	TO2	Not operating in uncontrolled emissions scenario.													
Thermal Oxidizer	TO3	TO3	Not operating in uncontrolled emissions scenario.													
Fugitives	FUG	FUG	--	--	--	--	88.64	388.24	--	--	--	--	--	--	4.03	17.65
Storage Tank SSM Emissions	SSM	SSM	--	--	--	--	--	10.00	--	--	--	--	--	--	--	--
Haul Road Fugitives	ROAD	ROAD	--	--	--	--	--	--	--	--	2.76	8.83	0.70	2.25	--	--
Produced Water Tank 1	PWTK1	PWTK1	--	--	--	--	0.00	0.01	--	--	--	--	--	--	--	--
Produced Water Tank 2	PWTK2	PWTK2	--	--	--	--	0.00	0.01	--	--	--	--	--	--	--	--
Produced Water Loading	PWTL	PWTL	--	--	--	--	0.39	2.49	--	--	--	--	--	--	0.00	0.01
Slop Oil Loading	OTL	OTL	--	--	--	--	54.47	10.32	--	--	--	--	--	--	0.02	0.00
Amine Unit 1	AU1	AU1	--	--	--	--	62.46	273.55	--	--	--	--	--	--	--	--
Amine Unit 2	AU2	AU2	--	--	--	--	62.46	273.55	--	--	--	--	--	--	--	--
Amine Unit 3	AU3	AU3	--	--	--	--	62.46	273.55	--	--	--	--	--	--	--	--
Gunbarrel Tank	GBS1	GBS1	--	--	--	--	229.81	1006.55	--	--	--	--	--	--	--	--
Slop Oil Tank	OTK7	OTK7	--	--	--	--	23.21	101.64	--	--	--	--	--	--	--	--
Turbine	TUR1	TUR1	51.40	225.13	35.10	153.74	14.40	63.07	2.14	9.35	9.20	40.30	9.20	40.30	1.01	4.41
Turbine	TUR2	TUR2	51.40	225.13	35.10	153.74	14.40	63.07	2.14	9.35	9.20	40.30	9.20	40.30	1.01	4.41
Turbine	TUR3	TUR3	51.40	225.13	35.10	153.74	14.40	63.07	2.14	9.35	9.20	40.30	9.20	40.30	1.01	4.41
Turbine	TUR4	TUR4	51.40	225.13	35.10	153.74	14.40	63.07	2.14	9.35	9.20	40.30	9.20	40.30	1.01	4.41
Emergency Generator	GEN1	GEN1	7.60	0.38	12.77	0.64	4.89	0.24	0.05	0.00	0.21	0.01	0.21	0.01	2.10	0.10
Emergency Generator	GEN2	GEN2	7.60	0.38	12.77	0.64	4.89	0.24	0.05	0.00	0.21	0.01	0.21	0.01	2.10	0.10
Emergency Generator	GEN3	GEN3	7.60	0.38	12.77	0.64	4.89	0.24	0.05	0.00	0.21	0.01	0.21	0.01	2.10	0.10
Emergency Generator	GEN4	GEN4	7.60	0.38	12.77	0.64	4.89	0.24	0.05	0.00	0.21	0.01	0.21	0.01	2.10	0.10

XTO ENERGY INC.

HUSKY CDP

UNCONTROLLED FACILITY EMISSIONS SUMMARY - COGENERATION OPERATING SCENARIO

UNCONTROLLED EMISSIONS SUMMARY TABLE

EMISSION SOURCE DESCRIPTION	FACILITY IDENTIFICATION NUMBER	STACK NUMBER	NOx		CO		VOC (INCLUDES HAPs)		SO_2		TSP		$PM_{10\ \&\ 2.5}$		HAPs	
			lb/hr	TPY	lb/hr	TPY	lb/hr	TPY	lb/hr	TPY	lb/hr	TPY	lb/hr	TPY	lb/hr	TPY
Emergency Generator	GEN5	GEN5	7.60	0.38	12.77	0.64	4.89	0.24	0.05	0.00	0.21	0.01	0.21	0.01	2.10	0.10
Emergency Generator	GEN6	GEN6	7.60	0.38	12.77	0.64	4.89	0.24	0.05	0.00	0.21	0.01	0.21	0.01	2.10	0.10
Emergency Generator	GEN7	GEN7	7.60	0.38	12.77	0.64	4.89	0.24	0.05	0.00	0.21	0.01	0.21	0.01	2.10	0.10
Emergency Generator	GEN8	GEN8	7.60	0.38	12.77	0.64	4.89	0.24	0.05	0.00	0.21	0.01	0.21	0.01	2.10	0.10

TOTAL FACILITY EMISSIONS	NOx		CO		VOC (INCLUDES HAPs)		SO_2		$PM_{10\ \&\ 2.5}$		$PM_{10\ \&\ 2.5}$		HAPs	
	lb/hr	TPY	lb/hr	TPY	lb/hr	TPY	lb/hr	TPY	lb/hr	TPY	lb/hr	TPY	lb/hr	TPY
	273.01	**932.46**	**246.59**	**637.70**	**837.44**	**3281.17**	**9.51**	**39.81**	**43.08**	**178.16**	**41.03**	**171.58**	**25.59**	**39.31**

XTO ENERGY INC.

HUSKY CDP

CONTROLLED FACILITY EMISSIONS SUMMARY - COGENERATION OPERATING SCENARIO

EMISSIONS SUMMARY TABLE

EMISSION SOURCE DESCRIPTION	FACILITY IDENTIFICATION NUMBER	STACK NUMBER	NOx		CO		VOC (INCLUDES HAPs)		SO_2		TSP		$PM_{10\ \&\ 2.5}$		HAPs		CO2e
			lb/hr	TPY	lb/hr	TPY	lb/hr	TPY	lb/hr	TPY	lb/hr	TPY	lb/hr	TPY	lb/hr	TPY	TPY
Stabilization Hot Oil Heater (64.83 MMBtu/hr)	SHTR1	SHTR1	1.73	7.58	1.06	4.63	0.41	1.82	0.14	0.63	0.48	2.12	0.48	2.12	0.12	0.52	33,256
Stabilization Hot Oil Heater (64.83 MMBtu/hr)	SHTR2	SHTR2	1.73	7.58	1.06	4.63	0.41	1.82	0.14	0.63	0.48	2.12	0.48	2.12	0.12	0.52	33,256
Regen Heater (39.14 MMBtu/hr)	RHTR1	RHTR1	1.05	4.58	0.64	2.79	0.25	1.10	0.09	0.38	0.29	1.28	0.29	1.28	0.07	0.32	20,078
Regen Heater (39.14 MMBtu/hr)	RHTR2	RHTR2	1.05	4.58	0.64	2.79	0.25	1.10	0.09	0.38	0.29	1.28	0.29	1.28	0.07	0.32	20,078
Regen Heater (39.14 MMBtu/hr)	RHTR3	RHTR3	1.05	4.58	0.64	2.79	0.25	1.10	0.09	0.38	0.29	1.28	0.29	1.28	0.07	0.32	20,078
SSM/Emergency Flare 1 (Dual Tip Flare) - Pilot/Purge SSM/Emergency Flare 2 (Dual Tip Flare) - Pilot/Purge Backup SSM/Emergency Flare (Dual Tip Flare) - Pilot/Purge	FL1-FL3[1]	FL1-FL3[1]	2.68	11.73	5.35	23.42	0.80	3.52	0.00	0.00	0.14	0.63	0.14	0.63	0.00	0.00	0
FL1-FL3 Stabilizer Overhead SSM Gas	FL1-FL3OVHD-SSM	FL1-FL3	61.51	11.20	122.80	22.35	404.29	73.58	0.00	0.00	3.32	0.60	3.32	0.60	4.45	0.81	9,441
FL1-FL3 Cryo Blowdown SSM Gas	FL1-FL3CRYO-SSM	FL1-FL3	102.43	18.64	204.48	37.22	210.13	38.24	0.05	0.01	5.29	0.96	5.29	0.96	1.31	0.24	16,652
Oil Storage 1 (100,000 bbl)	IFR1	IFR1	--	--	--	--	1.18	5.15	--	--	--	--	--	--	0.07	0.30	0.00
Oil Storage 2 (100,000 bbl)	IFR2	IFR2	--	--	--	--	1.18	5.15	--	--	--	--	--	--	0.07	0.30	0.00
Oil Storage 3 (100,000 bbl)	IFR3	IFR3	--	--	--	--	1.18	5.15	--	--	--	--	--	--	0.07	0.30	0.00
Oil Storage 4 (100,000 bbl)	IFR4	IFR4	--	--	--	--	1.18	5.15	--	--	--	--	--	--	0.07	0.30	0.00
3rd-Party Oil Storage 1	OTK1	OTK1	Emissions represented at ECD1.														
3rd-Party Oil Storage 2	OTK2	OTK2	Emissions represented at ECD1.														
3rd-Party Oil Storage 3	OTK3	OTK3	Emissions represented at ECD1.														
3rd-Party Oil Storage 4	OTK4	OTK4	Emissions represented at ECD1.														
3rd-Party Oil Storage 5	OTK5	OTK5	Emissions represented at ECD1.														
3rd-Party Oil Storage 6	OTK6	OTK6	Emissions represented at ECD1.														
Combustor	ECD1	ECD1	1.59	6.09	3.18	12.15	7.28	28.27	0.00	0.00	0.09	0.13	0.09	0.13	0.28	1.07	4,244
Thermal Oxidizer	TO1	TO1	2.52	11.03	2.09	9.15	0.62	2.74	0.86	3.78	0.23	1.03	0.23	1.03	0.08	0.35	101,557
Thermal Oxidizer	TO2	TO2	2.52	11.03	2.09	9.15	0.62	2.74	0.86	3.78	0.23	1.03	0.23	1.03	0.08	0.35	101,557

XTO ENERGY INC.

HUSKY CDP

CONTROLLED FACILITY EMISSIONS SUMMARY - COGENERATION OPERATING SCENARIO

EMISSIONS SUMMARY TABLE

EMISSION SOURCE DESCRIPTION	FACILITY IDENTIFICATION NUMBER	STACK NUMBER	NOx		CO		VOC (INCLUDES HAPs)		SO_2		TSP		$PM_{10\ \&\ 2.5}$		HAPs		CO2e
			lb/hr	TPY	lb/hr	TPY	lb/hr	TPY	lb/hr	TPY	lb/hr	TPY	lb/hr	TPY	lb/hr	TPY	TPY
Thermal Oxidizer	TO3	TO3	2.52	11.03	2.09	9.15	0.62	2.74	0.86	3.78	0.23	1.03	0.23	1.03	0.08	0.35	101,557
Fugitives	FUG	FUG	--	--	--	--	30.62	134.10	--	--	--	--	--	--	1.83	8.04	355
Storage Tank SSM Emissions	SSM	SSM	--	--	--	--	--	10.00	--	--	--	--	--	--	--	--	--
Haul Road Fugitives	ROAD	ROAD	--	--	--	--	--	--	--	--	2.76	8.83	0.70	2.25	--	--	--
Produced Water Tank 1	PWTK1	PWTK1	Emissions represented at ECD1.														
Produced Water Tank 2	PWTK2	PWTK2	Emissions represented at ECD1.														
Produced Water Loading	PWTL	PWTL	--	--	--	--	0.39	2.49	--	--	--	--	--	--	0.00	0.01	--
Slop Oil Loading	OTL	OTL	--	--	--	--	0.71	0.13	--	--	--	--	--	--	0.02	0.00	0.2
Amine Unit 1	AU1	AU1	Emissions represented at TO1.														
Amine Unit 2	AU2	AU2	Emissions represented at TO2.														
Amine Unit 3	AU3	AU3	Emissions represented at TO3.														
Gunbarrel Tank	GBS1	GBS1	Emissions represented at ECD1.														
Slop Oil Tank	OTK7	OTK7	Emissions represented at ECD1.														
Turbine	TUR1	TUR1	8.40	36.79	5.10	22.34	9.20	40.30	2.14	9.35	9.20	40.30	9.20	40.30	0.58	2.52	544,368
Turbine	TUR2	TUR2	8.40	36.79	5.10	22.34	9.20	40.30	2.14	9.35	9.20	40.30	9.20	40.30	0.58	2.52	544,368
Turbine	TUR3	TUR3	8.40	36.79	5.10	22.34	9.20	40.30	2.14	9.35	9.20	40.30	9.20	40.30	0.58	2.52	544,368
Turbine	TUR4	TUR4	8.40	36.79	5.10	22.34	9.20	40.30	2.14	9.35	9.20	40.30	9.20	40.30	0.58	2.52	544,368
Emergency Generator	GEN1	GEN1	7.60	0.38	12.77	0.64	4.89	0.24	0.05	0.00	0.21	0.01	0.21	0.01	2.10	0.10	157
Emergency Generator	GEN2	GEN2	7.60	0.38	12.77	0.64	4.89	0.24	0.05	0.00	0.21	0.01	0.21	0.01	2.10	0.10	157
Emergency Generator	GEN3	GEN3	7.60	0.38	12.77	0.64	4.89	0.24	0.05	0.00	0.21	0.01	0.21	0.01	2.10	0.10	157
Emergency Generator	GEN4	GEN4	7.60	0.38	12.77	0.64	4.89	0.24	0.05	0.00	0.21	0.01	0.21	0.01	2.10	0.10	157

XTO ENERGY INC.

HUSKY CDP

CONTROLLED FACILITY EMISSIONS SUMMARY - COGENERATION OPERATING SCENARIO

EMISSIONS SUMMARY TABLE

EMISSION SOURCE DESCRIPTION	FACILITY IDENTIFICATION NUMBER	STACK NUMBER	NOx		CO		VOC (INCLUDES HAPs)		SO_2		TSP		$PM_{10\ \&\ 2.5}$		HAPs		CO2e
			lb/hr	TPY	lb/hr	TPY	lb/hr	TPY	lb/hr	TPY	lb/hr	TPY	lb/hr	TPY	lb/hr	TPY	TPY
Emergency Generator	GEN5	GEN5	7.60	0.38	12.77	0.64	4.89	0.24	0.05	0.00	0.21	0.01	0.21	0.01	2.10	0.10	157
Emergency Generator	GEN6	GEN6	7.60	0.38	12.77	0.64	4.89	0.24	0.05	0.00	0.21	0.01	0.21	0.01	2.10	0.10	157
Emergency Generator	GEN7	GEN7	7.60	0.38	12.77	0.64	4.89	0.24	0.05	0.00	0.21	0.01	0.21	0.01	2.10	0.10	157
Emergency Generator	GEN8	GEN8	7.60	0.38	12.77	0.64	4.89	0.24	0.05	0.00	0.21	0.01	0.21	0.01	2.10	0.10	157

TOTAL FACILITY EMISSIONS	NOx		CO		VOC (INCLUDES HAPs)		SO_2		TSP		$PM_{10\ \&\ 2.5}$		HAPs		CO2e
	lb/hr^2	TPY	lb/hr^2	TPY	lb/hr^2	TPY	lb/hr^2	TPY	lb/hr^2	TPY	lb/hr^2	TPY	lb/hr^2	TPY	TPY
	154.5	**259.9**	**243.7**	**234.7**	**489.0**	**489.2**	**11.7**	**51.2**	**47.6**	**183.6**	**45.6**	**177.0**	**22.2**	**25.3**	**2,640,840**

[1] **Since FL3 serves as a backup flare, the pilot/purge gas emissions for the flares includes only two flares. The NGL/condensate overheads and cryo SSM stream can be routed to any of the flare; therefore, emissions were combined between the three flares. Since the two SSM events cannot occur simulataneously, the highest of the two stream hourly rates was used in the Total Facility Emissions.**

[2] **For all pollutants except VOC/HAP, the hourly emission rate excludes the generators and overhead SSM stream as they cannot occur at the same time and the cryo SSM stream has a higher emission rate. For VOC, the overhead SSM stream is included with the highest hourly rate. For HAP, the generators have the highest hourly rate.**

XTO ENERGY INC.

HUSKY CDP

MAJOR SOURCE THRESHOLD COMPARISON - COGEN OPTION (4 COGENERATION TURBINES/2 STABILIZER HEATERS/3 CRYOGENIC HEATERS)

PSD NESTED SOURCE CATEGORY	NOx		CO		VOC (INCLUDES HAPs)		SO_2		TSP		$PM_{10\ \&\ 2.5}$		H2SO4	
	lb/hr	TPY	lb/hr	TPY	lb/hr	TPY	lb/hr	TPY	lb/hr	TPY	lb/hr	TPY	lb/hr	TPY
Fossil fuel boilers (or combination thereof) totaling more than 250 MMBtu/hr heat input	6.60	28.90	4.03	17.64	1.58	6.93	0.55	2.39	1.84	8.06	1.84	8.06	-	-
Petroleum storage transfer units, total storage capacity over 300,000 barrels	5.06	21.25	5.29	21.41	44.52	189.22	0.29	5.03	1.05	5.26	1.05	5.26	-	-
Fossil fuel fired steam electric plants of more than 250 MMBtu/hr heat input	33.60	**147.17**	20.40	89.35	36.80	**161.18**	8.54	37.41	36.80	**161.18**	36.80	**161.18**	3.29	14.42

* The PSD significant emission rate (SER) for NOx, CO, VOC, SO2, and TSP/PM10 is 100 tpy for the nested source categories. The SER for sulfuric acid is 7 tpy.

XTO ENERGY INC.

HUSKY CDP

UNCONTROLLED FACILITY EMISSIONS SUMMARY - CDP BUILDOUT WITHOUT COGEN

UNCONTROLLED EMISSIONS SUMMARY TABLE

EMISSION SOURCE DESCRIPTION	FACILITY IDENTIFICATION NUMBER	STACK NUMBER	NOx		CO		VOC (INCLUDES HAPs)		SO_2		TSP		$PM_{10\ \&\ 2.5}$		HAPs	
			lb/hr	TPY	lb/hr	TPY	lb/hr	TPY	lb/hr	TPY	lb/hr	TPY	lb/hr	TPY	lb/hr	TPY
Stabilization Hot Oil Heater (64.83 MMBtu/hr)	SHTR1	SHTR1	1.73	7.58	1.06	4.63	0.41	1.82	0.14	0.63	0.48	2.12	0.48	2.12	0.12	0.52
Stabilization Hot Oil Heater (64.83 MMBtu/hr)	SHTR2	SHTR2	1.73	7.58	1.06	4.63	0.41	1.82	0.14	0.63	0.48	2.12	0.48	2.12	0.12	0.52
Stabilization Hot Oil Heater (64.83 MMBtu/hr)	SHTR3	SHTR3	1.73	7.58	1.06	4.63	0.41	1.82	0.14	0.63	0.48	2.12	0.48	2.12	0.12	0.52
Stabilization Hot Oil Heater (64.83 MMBtu/hr)	SHTR4	SHTR4	1.73	7.58	1.06	4.63	0.41	1.82	0.14	0.63	0.48	2.12	0.48	2.12	0.12	0.52
Stabilization Hot Oil Heater (64.83 MMBtu/hr)	SHTR5	SHTR5	1.73	7.58	1.06	4.63	0.41	1.82	0.14	0.63	0.48	2.12	0.48	2.12	0.12	0.52
Stabilization Hot Oil Heater (64.83 MMBtu/hr)	SHTR6	SHTR6	1.73	7.58	1.06	4.63	0.41	1.82	0.14	0.63	0.48	2.12	0.48	2.12	0.12	0.52
Stabilization Hot Oil Heater (64.83 MMBtu/hr)	SHTR7	SHTR7	1.73	7.58	1.06	4.63	0.41	1.82	0.14	0.63	0.48	2.12	0.48	2.12	0.12	0.52
Stabilization Hot Oil Heater (64.83 MMBtu/hr)	SHTR8	SHTR8	1.73	7.58	1.06	4.63	0.41	1.82	0.14	0.63	0.48	2.12	0.48	2.12	0.12	0.52
Stabilization Hot Oil Heater (64.83 MMBtu/hr)	SHTR9	SHTR9	1.73	7.58	1.06	4.63	0.41	1.82	0.14	0.63	0.48	2.12	0.48	2.12	0.12	0.52
Stabilization Hot Oil Heater (64.83 MMBtu/hr)	SHTR10	SHTR10	1.73	7.58	1.06	4.63	0.41	1.82	0.14	0.63	0.48	2.12	0.48	2.12	0.12	0.52
Stabilization Hot Oil Heater (64.83 MMBtu/hr)	SHTR11	SHTR11	1.73	7.58	1.06	4.63	0.41	1.82	0.14	0.63	0.48	2.12	0.48	2.12	0.12	0.52
Stabilization Hot Oil Heater (64.83 MMBtu/hr)	SHTR12	SHTR12	1.73	7.58	1.06	4.63	0.41	1.82	0.14	0.63	0.48	2.12	0.48	2.12	0.12	0.52
Cryo Hot Oil Heater (103.99 MMBtu/hr)	CHTR1	CHTR1	3.47	15.21	1.70	7.42	0.67	2.92	0.23	1.00	0.77	3.39	0.77	3.39	0.19	0.84
Cryo Hot Oil Heater (103.99 MMBtu/hr)	CHTR2	CHTR2	3.47	15.21	1.70	7.42	0.67	2.92	0.23	1.00	0.77	3.39	0.77	3.39	0.19	0.84
Cryo Hot Oil Heater (103.99 MMBtu/hr)	CHTR3	CHTR3	3.47	15.21	1.70	7.42	0.67	2.92	0.23	1.00	0.77	3.39	0.77	3.39	0.19	0.84
Regen Heater (39.14 MMBtu/hr)	RHTR1	RHTR1	1.05	4.58	0.64	2.79	0.25	1.10	0.09	0.38	0.29	1.28	0.29	1.28	0.07	0.32
Regen Heater (39.14 MMBtu/hr)	RHTR2	RHTR2	1.05	4.58	0.64	2.79	0.25	1.10	0.09	0.38	0.29	1.28	0.29	1.28	0.07	0.32
Regen Heater (39.14 MMBtu/hr)	RHTR3	RHTR3	1.05	4.58	0.64	2.79	0.25	1.10	0.09	0.38	0.29	1.28	0.29	1.28	0.07	0.32

XTO ENERGY INC.

HUSKY CDP

UNCONTROLLED FACILITY EMISSIONS SUMMARY - CDP BUILDOUT WITHOUT COGEN

UNCONTROLLED EMISSIONS SUMMARY TABLE

EMISSION SOURCE DESCRIPTION	FACILITY IDENTIFICATION NUMBER	STACK NUMBER	NOx		CO		VOC (INCLUDES HAPs)		SO_2		TSP		$PM_{10\ \&\ 2.5}$		HAPs	
			lb/hr	TPY	lb/hr	TPY	lb/hr	TPY	lb/hr	TPY	lb/hr	TPY	lb/hr	TPY	lb/hr	TPY
SSM/Emergency Flare 1 (Dual Tip Flare) - Pilot/Purge	FL1-FL3[1]	FL1-FL3[1]	Not operating in uncontrolled emissions scenario.													
SSM/Emergency Flare 2 (Dual Tip Flare) - Pilot/Purge			Not operating in uncontrolled emissions scenario.													
Backup SSM/Emergency Flare (Dual Tip Flare) - Pilot/Purge			Not operating in uncontrolled emissions scenario.													
FL1-FL3 Stabilizer Overhead SSM Gas	FL1-FL3OVHD-SSM	FL1-FL3	Not operating in uncontrolled emissions scenario.													
FL1-FL3 Cryo Blowdown SSM Gas	FL1-FL3CRYO-SSM	FL1-FL3	Not operating in uncontrolled emissions scenario.													
Oil Storage 1 (100,000 bbl)	IFR1	IFR1	--	--	--	--	1.18	5.15	--	--	--	--	--	--	0.07	0.30
Oil Storage 2 (100,000 bbl)	IFR2	IFR2	--	--	--	--	1.18	5.15	--	--	--	--	--	--	0.07	0.30
Oil Storage 3 (100,000 bbl)	IFR3	IFR3	--	--	--	--	1.18	5.15	--	--	--	--	--	--	0.07	0.30
Oil Storage 4 (100,000 bbl)	IFR4	IFR4	--	--	--	--	1.18	5.15	--	--	--	--	--	--	0.07	0.30
3rd-Party Oil Storage 1	OTK1	OTK1	--	--	--	--	25.09	109.91	--	--	--	--	--	--	--	--
3rd-Party Oil Storage 2	OTK2	OTK2	--	--	--	--	25.09	109.91	--	--	--	--	--	--	--	--
3rd-Party Oil Storage 3	OTK3	OTK3	--	--	--	--	25.09	109.91	--	--	--	--	--	--	--	--
3rd-Party Oil Storage 4	OTK4	OTK4	--	--	--	--	25.09	109.91	--	--	--	--	--	--	--	--
3rd-Party Oil Storage 5	OTK5	OTK5	--	--	--	--	25.09	109.91	--	--	--	--	--	--	--	--
3rd-Party Oil Storage 6	OTK6	OTK6	--	--	--	--	25.09	109.91	--	--	--	--	--	--	--	--
Combustor	ECD1	ECD1	Not operating in uncontrolled emissions scenario.													
Thermal Oxidizer	TO1	TO1	Not operating in uncontrolled emissions scenario.													
Thermal Oxidizer	TO2	TO2	Not operating in uncontrolled emissions scenario.													
Thermal Oxidizer	TO3	TO3	Not operating in uncontrolled emissions scenario.													
Fugitives	FUG	FUG	--	--	--	--	88.64	388.24	--	--	--	--	--	--	4.03	17.65
Storage Tank SSM Emissions	SSM	SSM	--	--	--	--	--	10.00	--	--	--	--	--	--	--	--

XTO ENERGY INC.

HUSKY CDP

UNCONTROLLED FACILITY EMISSIONS SUMMARY - CDP BUILDOUT WITHOUT COGEN

UNCONTROLLED EMISSIONS SUMMARY TABLE

EMISSION SOURCE DESCRIPTION	FACILITY IDENTIFICATION NUMBER	STACK NUMBER	NOx		CO		VOC (INCLUDES HAPs)		SO_2		TSP		$PM_{10\ \&\ 2.5}$		HAPs	
			lb/hr	TPY	lb/hr	TPY	lb/hr	TPY	lb/hr	TPY	lb/hr	TPY	lb/hr	TPY	lb/hr	TPY
Haul Road Fugitives	ROAD	ROAD	--	--	--	--	--	--	--	--	2.76	8.83	0.70	2.25	--	--
Produced Water Tank 1	PWTK1	PWTK1	--	--	--	--	0.00	0.01	--	--	--	--	--	--	--	--
Produced Water Tank 2	PWTK2	PWTK2	--	--	--	--	0.00	0.01	--	--	--	--	--	--	--	--
Produced Water Loading	PWTL	PWTL	--	--	--	--	0.39	2.49	--	--	--	--	--	--	0.00	0.01
Slop Oil Loading	OTL	OTL	--	--	--	--	54.47	10.32	--	--	--	--	--	--	1.66	0.32
Amine Unit 1	AU1	AU1	--	--	--	--	62.46	273.55	--	--	--	--	--	--	--	--
Amine Unit 2	AU2	AU2	--	--	--	--	62.46	273.55	--	--	--	--	--	--	--	--
Amine Unit 3	AU3	AU3	--	--	--	--	62.46	273.55	--	--	--	--	--	--	--	--
Gunbarrel Tank	GBS1	GBS1	--	--	--	--	229.81	1006.55	--	--	--	--	--	--	--	--
Slop Oil Tank	OTK7	OTK7	--	--	--	--	23.21	101.64	--	--	--	--	--	--	--	--
Emergency Generator	GEN1	GEN1	7.60	0.38	12.77	0.64	4.89	0.24	0.05	0.00	0.21	0.01	0.21	0.01	2.10	0.10
Emergency Generator	GEN2	GEN2	7.60	0.38	12.77	0.64	4.89	0.24	0.05	0.00	0.21	0.01	0.21	0.01	2.10	0.10
Emergency Generator	GEN3	GEN3	7.60	0.38	12.77	0.64	4.89	0.24	0.05	0.00	0.21	0.01	0.21	0.01	2.10	0.10
Emergency Generator	GEN4	GEN4	7.60	0.38	12.77	0.64	4.89	0.24	0.05	0.00	0.21	0.01	0.21	0.01	2.10	0.10
Emergency Generator	GEN5	GEN5	7.60	0.38	12.77	0.64	4.89	0.24	0.05	0.00	0.21	0.01	0.21	0.01	2.10	0.10
Emergency Generator	GEN6	GEN6	7.60	0.38	12.77	0.64	4.89	0.24	0.05	0.00	0.21	0.01	0.21	0.01	2.10	0.10
Emergency Generator	GEN7	GEN7	7.60	0.38	12.77	0.64	4.89	0.24	0.05	0.00	0.21	0.01	0.21	0.01	2.10	0.10
Emergency Generator	GEN8	GEN8	7.60	0.38	12.77	0.64	4.89	0.24	0.05	0.00	0.21	0.01	0.21	0.01	2.10	0.10

TOTAL FACILITY EMISSIONS	NOx		CO		VOC (INCLUDES HAPs)		SO_2		$PM_{10\ \&\ 2.5}$		$PM_{10\ \&\ 2.5}$		HAPs	
	lb/hr	TPY	lb/hr	TPY	lb/hr	TPY	lb/hr	TPY	lb/hr	TPY	lb/hr	TPY	lb/hr	TPY
	95.14	**153.39**	**121.84**	**91.31**	**785.98**	**3055.80**	**3.08**	**11.69**	**13.43**	**48.31**	**11.38**	**41.74**	**24.98**	**29.75**

XTO ENERGY INC.

HUSKY CDP

CONTROLLED FACILITY EMISSIONS SUMMARY - WITHOUT COGEN

EMISSIONS SUMMARY TABLE

EMISSION SOURCE DESCRIPTION	FACILITY NUMBER	STACK NUMBER	NOx		CO		VOC (INCLUDES HAPs)		SO_2		TSP		$PM_{10\ \&\ 2.5}$		HAPs		CO2e
			lb/hr	TPY	lb/hr	TPY	lb/hr	TPY	lb/hr	TPY	lb/hr	TPY	lb/hr	TPY	lb/hr	TPY	TPY
Stabilization Hot Oil Heater (64.83 MMBtu/hr)	SHTR1	SHTR1	1.73	7.58	1.06	4.63	0.41	1.82	0.14	0.63	0.48	2.12	0.48	2.12	0.12	0.52	33,256
Stabilization Hot Oil Heater (64.83 MMBtu/hr)	SHTR2	SHTR2	1.73	7.58	1.06	4.63	0.41	1.82	0.14	0.63	0.48	2.12	0.48	2.12	0.12	0.52	33,256
Stabilization Hot Oil Heater (64.83 MMBtu/hr)	SHTR3	SHTR3	1.73	7.58	1.06	4.63	0.41	1.82	0.14	0.63	0.48	2.12	0.48	2.12	0.12	0.52	33,256
Stabilization Hot Oil Heater (64.83 MMBtu/hr)	SHTR4	SHTR4	1.73	7.58	1.06	4.63	0.41	1.82	0.14	0.63	0.48	2.12	0.48	2.12	0.12	0.52	33,256
Stabilization Hot Oil Heater (64.83 MMBtu/hr)	SHTR5	SHTR5	1.73	7.58	1.06	4.63	0.41	1.82	0.14	0.63	0.48	2.12	0.48	2.12	0.12	0.52	33,256
Stabilization Hot Oil Heater (64.83 MMBtu/hr)	SHTR6	SHTR6	1.73	7.58	1.06	4.63	0.41	1.82	0.14	0.63	0.48	2.12	0.48	2.12	0.12	0.52	33,256
Stabilization Hot Oil Heater (64.83 MMBtu/hr)	SHTR7	SHTR7	1.73	7.58	1.06	4.63	0.41	1.82	0.14	0.63	0.48	2.12	0.48	2.12	0.12	0.52	33,256
Stabilization Hot Oil Heater (64.83 MMBtu/hr)	SHTR8	SHTR8	1.73	7.58	1.06	4.63	0.41	1.82	0.14	0.63	0.48	2.12	0.48	2.12	0.12	0.52	33,256
Stabilization Hot Oil Heater (64.83 MMBtu/hr)	SHTR9	SHTR9	1.73	7.58	1.06	4.63	0.41	1.82	0.14	0.63	0.48	2.12	0.48	2.12	0.12	0.52	33,256
Stabilization Hot Oil Heater (64.83 MMBtu/hr)	SHTR10	SHTR10	1.73	7.58	1.06	4.63	0.41	1.82	0.14	0.63	0.48	2.12	0.48	2.12	0.12	0.52	33,256
Stabilization Hot Oil Heater (64.83 MMBtu/hr)	SHTR11	SHTR11	1.73	7.58	1.06	4.63	0.41	1.82	0.14	0.63	0.48	2.12	0.48	2.12	0.12	0.52	33,256
Stabilization Hot Oil Heater (64.83 MMBtu/hr)	SHTR12	SHTR12	1.73	7.58	1.06	4.63	0.41	1.82	0.14	0.63	0.48	2.12	0.48	2.12	0.12	0.52	33,256
Cryo Hot Oil Heater (103.99 MMBtu/hr)	CHTR1	CHTR1	3.47	15.21	1.70	7.42	0.67	2.92	0.23	1.00	0.77	3.39	0.77	3.39	0.19	0.84	53,345
Cryo Hot Oil Heater (103.99 MMBtu/hr)	CHTR2	CHTR2	3.47	15.21	1.70	7.42	0.67	2.92	0.23	1.00	0.77	3.39	0.77	3.39	0.19	0.84	53,345
Cryo Hot Oil Heater (103.99 MMBtu/hr)	CHTR3	CHTR3	3.47	15.21	1.70	7.42	0.67	2.92	0.23	1.00	0.77	3.39	0.77	3.39	0.19	0.84	53,345
Regen Heater (39.14 MMBtu/hr)	RHTR1	RHTR1	1.05	4.58	0.64	2.79	0.25	1.10	0.09	0.38	0.29	1.28	0.29	1.28	0.07	0.32	20,078
Regen Heater (39.14 MMBtu/hr)	RHTR2	RHTR2	1.05	4.58	0.64	2.79	0.25	1.10	0.09	0.38	0.29	1.28	0.29	1.28	0.07	0.32	20,078
Regen Heater (39.14 MMBtu/hr)	RHTR3	RHTR3	1.05	4.58	0.64	2.79	0.25	1.10	0.09	0.38	0.29	1.28	0.29	1.28	0.07	0.32	20,078
SSM/Emergency Flare 1 (Dual Tip Flare) - Pilot/Purge	FL1-FL3[1]	FL1-FL3[1]	2.68	11.73	5.35	23.42	0.80	3.52	0.00	0.00	0.14	0.63	0.14	0.63	0.00	0.00	0
SSM/Emergency Flare 2 (Dual Tip Flare) - Pilot/Purge																	
Backup SSM/Emergency Flare (Dual Tip Flare) - Pilot/Purge																	

XTO ENERGY INC.

HUSKY CDP

CONTROLLED FACILITY EMISSIONS SUMMARY - WITHOUT COGEN

EMISSIONS SUMMARY TABLE

EMISSION SOURCE DESCRIPTION	FACILITY NUMBER	STACK NUMBER	NOx		CO		VOC (INCLUDES HAPs)		SO_2		TSP		$PM_{10\ \&\ 2.5}$		HAPs		CO2e
			lb/hr	TPY	lb/hr	TPY	lb/hr	TPY	lb/hr	TPY	lb/hr	TPY	lb/hr	TPY	lb/hr	TPY	TPY
FL1-FL3 Stabilizer Overhead SSM Gas	FL1-FL3OVHD-SSM	FL1-FL3	61.51	11.20	122.80	22.35	404.29	73.58	0.00	0.00	3.32	0.60	3.32	0.60	4.45	0.81	9,441
FL1-FL3 Cryo Blowdown SSM Gas	FL1-FL3CRYO-SSM	FL1-FL3	102.43	18.64	204.48	37.22	210.13	38.24	0.05	0.01	5.29	0.96	5.29	0.96	1.31	0.24	16,652
Oil Storage 1 (100,000 bbl)	IFR1	IFR1	--	--	--	--	1.18	5.15	--	--	--	--	--	--	0.07	0.30	0.00
Oil Storage 2 (100,000 bbl)	IFR2	IFR2	--	--	--	--	1.18	5.15	--	--	--	--	--	--	0.07	0.30	0.00
Oil Storage 3 (100,000 bbl)	IFR3	IFR3	--	--	--	--	1.18	5.15	--	--	--	--	--	--	0.07	0.30	0.00
Oil Storage 4 (100,000 bbl)	IFR4	IFR4	--	--	--	--	1.18	5.15	--	--	--	--	--	--	0.07	0.30	0.00
3rd-Party Oil Storage 1	OTK1	OTK1	Emissions represented at ECD1.														
3rd-Party Oil Storage 2	OTK2	OTK2	Emissions represented at ECD1.														
3rd-Party Oil Storage 3	OTK3	OTK3	Emissions represented at ECD1.														
3rd-Party Oil Storage 4	OTK4	OTK4	Emissions represented at ECD1.														
3rd-Party Oil Storage 5	OTK5	OTK5	Emissions represented at ECD1.														
3rd-Party Oil Storage 6	OTK6	OTK6	Emissions represented at ECD1.														
Combustor	ECD1	ECD1	1.59	6.09	3.18	12.15	7.28	28.27	0.00	0.00	0.09	0.13	0.09	0.13	0.28	1.07	4,244
Thermal Oxidizer	TO1	TO1	2.52	11.03	2.09	9.15	0.62	2.74	0.86	3.78	0.23	1.03	0.23	1.03	0.08	0.35	101,557
Thermal Oxidizer	TO2	TO2	2.52	11.03	2.09	9.15	0.62	2.74	0.86	3.78	0.23	1.03	0.23	1.03	0.08	0.35	101,557
Thermal Oxidizer	TO3	TO3	2.52	11.03	2.09	9.15	0.62	2.74	0.86	3.78	0.23	1.03	0.23	1.03	0.08	0.35	101,557
Fugitives	FUG	FUG	--	--	--	--	30.62	134.10	--	--	--	--	--	--	1.83	8.04	355
Storage Tank SSM Emissions	SSM	SSM	--	--	--	--	--	10.00	--	--	--	--	--	--	--	--	--
Haul Road Fugitives	ROAD	ROAD	--	--	--	--	--	--	--	--	2.76	8.83	0.70	2.25	--	--	--

XTO ENERGY INC.

HUSKY CDP

CONTROLLED FACILITY EMISSIONS SUMMARY - WITHOUT COGEN

EMISSIONS SUMMARY TABLE

EMISSION SOURCE DESCRIPTION	FACILITY NUMBER	STACK NUMBER	NOx		CO		VOC (INCLUDES HAPs)		SO_2		TSP		$PM_{10\ \&\ 2.5}$		HAPs		CO2e
			lb/hr	TPY	lb/hr	TPY	lb/hr	TPY	lb/hr	TPY	lb/hr	TPY	lb/hr	TPY	lb/hr	TPY	TPY
Produced Water Tank 1	PWTK1	PWTK1	Emissions represented at ECD1.														
Produced Water Tank 2	PWTK2	PWTK2	Emissions represented at ECD1.														
Produced Water Loading	PWTL	PWTL	--	--	--	--	0.39	2.49	--	--	--	--	--	--	0.00	0.01	--
Slop Oil Loading	OTL	OTL	--	--	--	--	0.71	0.13	--	--	--	--	--	--	0.02	0.00	--
Amine Unit 1	AU1	AU1	Emissions represented at TO1.														
Amine Unit 2	AU2	AU2	Emissions represented at TO2.														
Amine Unit 3	AU3	AU3	Emissions represented at TO3.														
Gunbarrel Tank	GBS1	GBS1	Emissions represented at ECD1.														
Slop Oil Tank	OTK7	OTK7	Emissions represented at ECD1.														
Emergency Generator	GEN1	GEN1	7.60	0.38	12.77	0.64	4.89	0.24	0.05	0.00	0.21	0.01	0.21	0.01	2.10	0.10	157
Emergency Generator	GEN2	GEN2	7.60	0.38	12.77	0.64	4.89	0.24	0.05	0.00	0.21	0.01	0.21	0.01	2.10	0.10	157
Emergency Generator	GEN3	GEN3	7.60	0.38	12.77	0.64	4.89	0.24	0.05	0.00	0.21	0.01	0.21	0.01	2.10	0.10	157
Emergency Generator	GEN4	GEN4	7.60	0.38	12.77	0.64	4.89	0.24	0.05	0.00	0.21	0.01	0.21	0.01	2.10	0.10	157
Emergency Generator	GEN5	GEN5	7.60	0.38	12.77	0.64	4.89	0.24	0.05	0.00	0.21	0.01	0.21	0.01	2.10	0.10	157
Emergency Generator	GEN6	GEN6	7.60	0.38	12.77	0.64	4.89	0.24	0.05	0.00	0.21	0.01	0.21	0.01	2.10	0.10	157
Emergency Generator	GEN7	GEN7	7.60	0.38	12.77	0.64	4.89	0.24	0.05	0.00	0.21	0.01	0.21	0.01	2.10	0.10	157
Emergency Generator	GEN8	GEN8	7.60	0.38	12.77	0.64	4.89	0.24	0.05	0.00	0.21	0.01	0.21	0.01	2.10	0.10	157

TOTAL FACILITY EMISSIONS	NOx		CO		VOC (INCLUDES HAPs)		SO_2		TSP		$PM_{10\ \&\ 2.5}$		HAPs		CO2e
	lb/hr[2]	TPY	lb/hr[2]	TPY	lb/hr[2]	TPY	lb/hr[2]	TPY	lb/hr[2]	TPY	lb/hr[2]	TPY	lb/hr[2]	TPY	TPY
	148.6	**234.1**	**239.0**	**213.9**	**458.4**	**354.9**	**5.3**	**23.0**	**18.0**	**53.7**	**15.9**	**47.1**	**21.7**	**23.0**	**955,965**

[1] **Since FL3 serves as a backup flare, the pilot/purge gas emissions for the flares includes only two flares. The NGL/condensate overheads and cryo SSM stream can be routed to any of the flare; therefore, emissions were combined between the three flares. Since the two SSM events cannot occur simulataneously, the highest of the two stream hourly rates was used in the Total Facility Emissions.**

[2] **For all pollutants except VOC/HAP, the hourly emission rate excludes the generators and overhead SSM stream as they cannot occur at the same time and the cryo SSM stream has a higher emission rate. For VOC, the overhead SSM stream is included with the highest hourly rate. For HAP, the generators have the highest hourly rate.**

XTO ENERGY INC.

HUSKY CDP

MAJOR SOURCE THRESHOLD COMPARISON - COGEN OPTION (4 COGENERATION TURBINES/2 STABILIZER HEATERS/3 CRYOGENIC HEATERS)

PSD NESTED SOURCE CATEGORY	NOx		CO		VOC (INCLUDES HAPs)		SO_2		TSP		$PM_{10\ \&\ 2.5}$		H2SO4	
	lb/hr	TPY	lb/hr	TPY	lb/hr	TPY	lb/hr	TPY	lb/hr	TPY	lb/hr	TPY	lb/hr	TPY
Fossil fuel boilers (or combination thereof) totaling more than 250 MMBtu/hr heat input	34.33	**150.35**	19.68	86.20	7.73	33.84	2.66	11.67	9.00	39.40	9.00	39.40	-	-
Petroleum storage transfer units, total storage capacity over 300,000 barrels	22.36	97.07	15.86	67.69	48.67	**207.39**	1.72	7.52	5.88	25.52	5.88	25.52	-	-

* The PSD significant emission rate (SER) for NOx, CO, VOC, SO2, and TSP/PM10 is 100 tpy for the nested source categories.

XTO ENERGY INC.
HUSKY CDP
CLASS 1 AREA AQRV ANALYSIS

Q/D Analysis & Emissions Summary Table

Emissions Increase: Q (tpy) =	487.64

Class 1 Area:	Distance: d (km)	Q/d
Carlsbad Caverns	50.57	9.64
Guadelupe Mountains	92.8	5.25
Salt Creek Wilderness	135.6	3.60
White Mountains	200.7	2.43

Stream Source[a,b]	NOx			H2SO4			SO_2			$PM_{10\ \&\ 2.5}$		
	lb/hr	lb/day	TPY	lb/hr	lb/day	TPY	lb/hr	lb/day	TPY	lb/hr	lb/day	TPY
Stabilization Hot Oil Heater (64.83 MMBtu/hr)	1.73	41.5	7.6	0.00	0.00	0.00	0.14	3.43	0.63	0.48	11.59	2.12
Stabilization Hot Oil Heater (64.83 MMBtu/hr)	1.73	41.5	7.6	0.00	0.00	0.00	0.14	3.43	0.63	0.48	11.59	2.12
Regen Heater (39.14 MMBtu/hr)	1.05	25.1	4.6	0.00	0.00	0.00	0.09	2.07	0.38	0.29	7.00	1.28
Regen Heater (39.14 MMBtu/hr)	1.05	25.1	4.6	0.00	0.00	0.00	0.09	2.07	0.38	0.29	7.00	1.28
Regen Heater (39.14 MMBtu/hr)	1.05	25.1	4.6	0.00	0.00	0.00	0.09	2.07	0.38	0.29	7.00	1.28
SSM/Emergency Flare 1 (Dual Tip Flare) - Pilot/Purge	2.68	64.3	11.7	0.00	0.00	0.00	0.00	0.00	0.00	0.14	3.47	0.63
SSM/Emergency Flare 2 (Dual Tip Flare) - Pilot/Purge												
Backup SSM/Emergency Flare (Dual Tip Flare) - Pilot/Purge												
FL1-FL3 Stabilizer Overhead SSM Gas	This will not occur at the same time as the cryo SSM stream and has a lower daily emission rate.											
Cryo Blowdown SSM Gas (FL1-FL3CRYO-SSM)	102.43	204.9	37.4	0.00	0.00	0.00	0.05	0.10	0.02	5.29	10.57	1.93
Combustor	1.59	38.2	7.0	0.00	0.00	0.00	0.00	0.00	0.00	0.09	2.06	0.38
Thermal Oxidizer	2.52	60.5	11.0	0.00	0.00	0.00	0.86	20.70	3.78	0.23	5.63	1.03
Thermal Oxidizer	2.52	60.5	11.0	0.00	0.00	0.00	0.86	20.70	3.78	0.23	5.63	1.03
Thermal Oxidizer	1.91	45.7	8.3	0.00	0.00	0.00	0.00	0.00	0.00	0.18	4.21	0.77
Turbine	8.40	201.6	36.8	0.82	19.75	3.60	2.14	51.24	9.35	9.20	220.80	40.30
Turbine	8.40	201.6	36.8	0.82	19.75	3.60	2.14	51.24	9.35	9.20	220.80	40.30
Turbine	8.40	201.6	36.8	0.82	19.75	3.60	2.14	51.24	9.35	9.20	220.80	40.30
Turbine	8.40	201.6	36.8	0.82	19.75	3.60	2.14	51.24	9.35	9.20	220.80	40.30
Emergency Generator	This unit will not operate at the same time as the SSM event, which has a daily hourly emission rate.											
Emergency Generator	This unit will not operate at the same time as the SSM event, which has a daily hourly emission rate.											
Emergency Generator	This unit will not operate at the same time as the SSM event, which has a daily hourly emission rate.											
Emergency Generator	This unit will not operate at the same time as the SSM event, which has a daily hourly emission rate.											
Emergency Generator	This unit will not operate at the same time as the SSM event, which has a daily hourly emission rate.											
Emergency Generator	This unit will not operate at the same time as the SSM event, which has a daily hourly emission rate.											
Emergency Generator	This unit will not operate at the same time as the SSM event, which has a daily hourly emission rate.											
Emergency Generator	This unit will not operate at the same time as the SSM event, which has a daily hourly emission rate.											
Maximum Facility Emissions - Minus SSM and Generators	**48.7**	**1169.6**	**213.5**	**3.3**	**79.0**	**14.4**	**10.8**	**259.4**	**47.3**	**39.5**	**948.4**	**173.1**
Maximum SSM Emissions	**102.4**	**204.9**	**37.4**	**0.0**	**0.0**	**0.0**	**0.1**	**0.1**	**0.0**	**5.3**	**10.6**	**1.9**
Maximum Facility Emissions[c]	**151.2**	**1374.5**	**250.8**	**3.3**	**79.0**	**14.4**	**10.9**	**259.5**	**47.4**	**44.8**	**959.0**	**175.0**

Footnotes:

[a] SSM Stabilizer Overhead Gas and Cryo Blowdown SSM events can not occur wihtin the same 24 hour period. PTE for total hourly rate and the Q/D analysis assumes the highest lb/day & lb/hr value from either SSM stream to be conservative.

[b] SSM Stabilizer Overhead Gas and Cryo Blowdown SSM events can not occur wihtin the same 24 hour period, so XTO conservatively is assuming each can occur 182 days per year.

[c] The maximum daily facility rates do not include the generators since they cannot occur at the same time as the SSM event and have lower hourly emission rates.

HUSKY CDP
COGENERATION TURBINES
Sulfur Dioxide and Sulfuric Acid Emissions

Sulfur Dioxide and Sulfuric Acid, and Particulate Matter Calculations for Gas Turbines

	gr/100 scf	lb/100 scf	lbmol-S/100 scf	lbmol-H2S/100 scf
Fuel gas Total Sulfur content (from AP-42: 7500 gr/MMscf) =	0.75	0.000107143	3.34143E-06	9.79891E-08
	MW for S	MW for H2S	MW for SO2	MW for H2SO4
	32.065	34.1	64.066	98.079
Fuel Gas, LHV = Btu/scf	850			
Fuel Gas HHV:LHV	1.1			

Calculation Case:

SO2 to SO3/H2SO4 conversion is 25% at the catalyst

		Case 5A(new) Winter, reduced DB			
		GT	**DB**	**1 GT+DB**	**Total for 4 GT+DB**
GT Net Output @ Gen End	kW	96200			
Net Heat Rate (LHV) @ Gen end	Btu/kWh	9165			
Fuel Gas Firing rate, LHV	MMBtu/hr	881.67	179.52	1061.19	4244.772
Fuel Gas Flow	scfh	1037262	211200	1248462	
Annual Hours of Operations	hr/y	8760	8760	8760	8760
Sulfur In	lbmol/hr	0.035	0.007	0.04	0.17
SO2 formed from fuel	lbmol/hr	0.035	0.007	0.04	0.17
	lb/hr	2.220	0.452	2.67	10.69
	tpy	9.726	1.980	11.71	46.82
SO2->SO3->H2SO4 conv due to combustion		10%	10%		
Sulfuric Acid formed	lbmol/hr	0.0035	0.0007	0.00	0.02
	lb/hr	0.340	0.069	0.41	1.64
	tpy	1.489	0.303	1.79	7.17
SO2->SO3->H2SO4 conv due to DB flame pass through		5%	0%		
Sulfuric Acid formed	lbmol/hr	0.0016	0.0000	0.00	0.01
	lb/hr	0.153	0.000	0.15	0.61
	tpy	0.670	0.000	0.67	2.68
SO2->SO3->H2SO4 conv at Dual Function Catalyst		2%			
Sulfuric Acid formed	lbmol/hr	0.001		0.001	0.003
	lb/hr	0.071		0.071	0.282
	tpy	0.309		0.309	1.237
SO2->SO3->H2SO4 conv at Stack Exit Condition of 300 F		0.055			
Sulfuric Acid formed	lbmol/hr	0.002		0.002	0.008
	lb/hr	0.190		0.190	0.761
	tpy	0.833		0.833	3.333
Estimated Stack Emissions					
Sulfuric Acid Stack Emissions	lbmol/hr	0.008		0.008	0.034
	lb/hr	0.823		0.823	3.292
	tpy	3.604		3.604	14.418
SO2 Stack Emissions	lbmol/hr	0.033		0.033	0.133
	lb/hr	2.135		2.135	8.540
	tpy	9.352		9.352	37.406

Notes:

1. SO2->SO3->H2SO4 conversion at Dual Function Catalyst is based on vendor guarantee from catalyst vendor (pass thru from N/E)
2. SO2->SO3->H2SO4 conversion at Stack Conditions are EPRI (Electric Power Research Institute), Estimating Total Sulfuric Acid Emissions from Stationary Power Plants, doc# 3002012398, 2018 Update
3. SO2->SO3->H2SO4 conversion at the combustors/DB and due to combustion at flame conditions is based on information from N/E)

HUSKY CDP
COGENERATION TURBINES
VOC AND HAP EMISSIONS SUMMARY

STACK EMISSIONS - HAZARDOUS AIR POLLUTANTS FOR EACH COGEN STACK

	UNCONTROLLED BASIS					CONTROLLED WITH CATOX				
Parameter	ppmvd-15% O2	lb/hr	tpy (8760)	g/s	kg/hr	ppmvd-15% O2	lb/hr	tpy (8760)	g/s	kg/hr
VOC (as Formaldehyde)	5.18	14.52	63.59	1.83	6.59	3.285	9.200	40.30	1.16	4.17
Formaldehyde	0.23	0.64	2.80	0.08	0.29	0.076	0.21	0.93	0.03	0.10
Organic HAPs excl. HCOH	-	0.57	2.50	0.07	0.26		0.36	1.58	0.05	0.16
Inorganic HAPs	-	0.00	0.00	0.00	0.00		0.00	0.00	0.00	0.00
Total HAPs	-	1.21	5.30	0.15	0.55		0.58	2.52	0.07	0.26
Total Metals	-	0.00	0.00	0.00	0.00		0.00	0.00	0.00	0.00

FUEL GAS BASIS		
Fuel Gas, LHV	Btu/scf	850
Fuel Gas HHV:LHV		1.1
FIRING RATE		
Gas Turbine	MMbtu-LHV/h	881.67
Duct Burner	MMbtu-LHV/h	179.52

Vendor-Supplied Data

Minimum Stack Exit Temperature (F)	185	°F
Minimum Stack Exit Velocity (ft/sec)	38.3	ft/sec
Maximum Stack Exit Temperature (F)	423.5	°F
Maximum Stack Exit Velocity (ft/sec)	67.2	ft/sec

CATALYTIC OXIDATION CONTROL STATUS	
Removal Efficiency %	
CATOX-VOC	37
CATOX-HCHO	67

GT+DB EXHAUST FLOW - BEFORE SCR			
FLOWS	Exhaust	Exhaust	Exhaust
Component	lbmol/h	wet mol%	dry mol%
O2 =	9,312	12.08%	13.14%
Total, Wet =	77,065		
Total, Dry =	70,889		

STACK EXHAUST MOLAR BALANCE - POST SCR			
FLOWS	Exhaust	Exhaust	Exhaust
Component	lbmol/h	wet mol%	dry mol%
O2 =	9,326	12.1%	13.14%
Total, Wet =	77,150		
Total, Dry =	70,962		

GAS TURBINE - VOC and HAPs EMISSIONS - EMISSION FACTOR BASED DETERMINATIONS

	AP-42 Factor			EMISSION RATES				
Pollutant	Em. Factor Source	lb/MMscf	lb/MMBtu	lb/hr	tpy	g/s	kg/hr	Notes
Lead	AP-42, Table 3.1-2a	-	-	0.00	0.00	0.00	0.00	a
VOC (as HCHO)	Per GT Vendor	1.11E+01	1.19E-02	11.56	50.62	1.46	5.24	a
1,3 Butadiene	AP-42, Table 3.1-3	-	4.30E-07	0.00	0.00	0.00	0.00	b
Acetaldehyde	AP-42, Table 3.1-3	-	4.00E-05	0.04	0.15	0.00	0.02	b
Acrolein	AP-42, Table 3.1-3	-	6.40E-06	0.01	0.02	0.00	0.00	b
Benzene	AP-42, Table 3.1-3	-	1.20E-05	0.01	0.05	0.00	0.00	b
Ethylbenzene	AP-42, Table 3.1-3	-	3.20E-05	0.03	0.12	0.00	0.01	b
Formaldehyde	AP-42, Table 3.1-3	-	7.10E-04	0.63	2.74	0.08	0.28	b
Naphthalene	AP-42, Table 3.1-3	-	1.30E-06	0.00	0.01	0.00	0.00	b
Toluene	AP-42, Table 3.1-3	-	1.30E-04	0.11	0.50	0.01	0.05	b
Xylenes	AP-42, Table 3.1-3	-	6.40E-05	0.06	0.25	0.01	0.03	b

Notes:

a. Criteria pollutant by name or association, i.e., VOC as surrogates for O3

b. Hazardous Air Pollutant (HAP) as defined by Section 112(b) of the Clean Air Act.

c. HAP because it is Polycyclic Organic Matter (POM). POM is a HAP as defined by Section 112(b) of Clean Air Act

d. non-VOC per 40 CFR 51.100(s)(1) methane and ethane are not considered as regulated photochemical reactive VOC

HUSKY CDP
COGENERATION TURBINES
VOC AND HAP EMISSIONS SUMMARY

DUCT BURNER - VOC and HAPs EMISSIONS EMISSION FACTOR BASED DETERMINATIONS

	Emission Factor			EMISSION RATES				
Pollutant	**Source**	**lb/MMscf**	**lb/MMBtu**	**lb/hr**	**tpy**	**g/s**	**kg/hr**	**Notes**
Lead	AP-42, Table 1.4-2	5.00E-04	5.35E-07	1.06E-04	4.63E-04	1.33E-05	4.79E-05	a
VOC (as HCHO)	Per HRSG Vendor	1.40E+01	1.50E-02	2.96E+00	1.30E+01	3.75E-01	1.35E+00	a
2-Methylnaphthalene	AP-42, Table 1.4-3	2.40E-05	-	4.22E-06	1.85E-05	5.32E-07	1.92E-06	b
3-Methylchloranthrene	AP-42, Table 1.4-3	1.80E-06	-	3.17E-07	1.39E-06	3.99E-08	1.44E-07	b
7,12-Dimethylbenz(a)anthracene	AP-42, Table 1.4-3	1.60E-05	-	2.82E-06	1.23E-05	3.55E-07	1.28E-06	b, c
Acenaphthene	AP-42, Table 1.4-3	1.80E-06	-	3.17E-07	1.39E-06	3.99E-08	1.44E-07	b, c
Acenaphthylene	AP-42, Table 1.4-3	1.80E-06	-	3.17E-07	1.39E-06	3.99E-08	1.44E-07	b, c
Anthracene	AP-42, Table 1.4-3	2.40E-06	-	4.22E-07	1.85E-06	5.32E-08	1.92E-07	b, c
Benz(a)anthracene	AP-42, Table 1.4-3	1.80E-06	-	3.17E-07	1.39E-06	3.99E-08	1.44E-07	b, c
Benzene	AP-42, Table 1.4-3	2.10E-03	-	3.70E-04	1.62E-03	4.66E-05	1.68E-04	b
Benzo(a)pyrene	AP-42, Table 1.4-3	1.20E-06	-	2.11E-07	9.25E-07	2.66E-08	9.58E-08	b, c
Benzo(b)fluoranthene	AP-42, Table 1.4-3	1.80E-06	-	3.17E-07	1.39E-06	3.99E-08	1.44E-07	b, c
Benzo(g,h,i)perylene	AP-42, Table 1.4-3	1.20E-06	-	2.11E-07	9.25E-07	2.66E-08	9.58E-08	b, c
Benzo(k)fluoranthene	AP-42, Table 1.4-3	1.80E-06	-	3.17E-07	1.39E-06	3.99E-08	1.44E-07	b, c
Chrysene	AP-42, Table 1.4-3	1.80E-06	-	3.17E-07	1.39E-06	3.99E-08	1.44E-07	b, c
Dibenzo(a,h)anthracene	AP-42, Table 1.4-3	1.20E-06	-	2.11E-07	9.25E-07	2.66E-08	9.58E-08	b, c
Dichlorobenzene	AP-42, Table 1.4-3	1.20E-03	-	2.11E-04	9.25E-04	2.66E-05	9.58E-05	b
Fluoranthene	AP-42, Table 1.4-3	3.00E-06	-	5.28E-07	2.31E-06	6.65E-08	2.39E-07	b, c
Fluorene	AP-42, Table 1.4-3	2.80E-06	-	4.93E-07	2.16E-06	6.21E-08	2.24E-07	b, c
Formaldehyde	AP-42, Table 1.4-3	7.50E-02	-	1.32E-02	5.78E-02	1.66E-03	5.99E-03	b
Hexane	AP-42, Table 1.4-3	1.80E+00	-	3.17E-01	1.39E+00	3.99E-02	1.44E-01	b
Indeno(1,2,3-cd)pyrene	AP-42, Table 1.4-3	1.80E-06	-	3.17E-07	1.39E-06	3.99E-08	1.44E-07	b, c
Naphthalene	AP-42, Table 1.4-3	6.10E-04	-	1.07E-04	4.70E-04	1.35E-05	4.87E-05	b
Phenanathrene	AP-42, Table 1.4-3	1.70E-05	-	2.99E-06	1.31E-05	3.77E-07	1.36E-06	b, c
Pyrene	AP-42, Table 1.4-3	5.00E-06	-	8.80E-07	3.85E-06	1.11E-07	3.99E-07	b, c
Toluene	AP-42, Table 1.4-3	3.40E-03	-	5.98E-04	2.62E-03	7.54E-05	2.71E-04	b
Arsenic	AP-42, Table 1.4-4	2.00E-04	-	3.52E-05	1.54E-04	4.44E-06	1.60E-05	b
Beryllium	AP-42, Table 1.4-4	1.20E-05	-	2.11E-06	9.25E-06	2.66E-07	9.58E-07	b
Cadmium	AP-42, Table 1.4-4	1.10E-03	-	1.94E-04	8.48E-04	2.44E-05	8.78E-05	b
Chromium	AP-42, Table 1.4-4	1.40E-03	-	2.46E-04	1.08E-03	3.10E-05	1.12E-04	b
Cobalt	AP-42, Table 1.4-4	8.40E-05	-	1.48E-05	6.48E-05	1.86E-06	6.71E-06	b
Manganese	AP-42, Table 1.4-4	3.80E-04	-	6.69E-05	2.93E-04	8.43E-06	3.03E-05	b
Mercury	AP-42, Table 1.4-4	2.60E-04	-	4.58E-05	2.00E-04	5.77E-06	2.08E-05	b
Nickel	AP-42, Table 1.4-4	2.10E-03	-	3.70E-04	1.62E-03	4.66E-05	1.68E-04	b
Selenium	AP-42, Table 1.4-4	2.40E-05	-	4.22E-06	1.85E-05	5.32E-07	1.92E-06	

Notes:

a. Criteria pollutant by name or association, i.e., VOC as surrogates for O3

b. Hazardous Air Pollutant (HAP) as defined by Section 112(b) of the Clean Air Act.

c. POM is a HAP as defined by Section 112(b) of Clean Air Act

d. non-VOC per 40 CFR 51.100(s)(1); methane and ethane are not considered as regulated photochemical reactive VOC

XTO ENERGY INC.
HUSKY CDP
Greenhouse Gas Emissions - COGEN (TUR1 - TUR4)

Emission unit number(s): TUR1-TUR4
Source description: Combined Cycle Turbines

Fuel Consumption			
Input heat rate:	1061.19	MMBtu/hr	Fired Capacity
Fuel heat value:	850	Btu/scf	Field Gas
Fuel rate:	1248462.4	scf/hr	Input heat rate / fuel heat value
Annual fuel usage:	10936.5	MMscf/yr	8760 hrs/yr operation
Hours per year:	8760	hrs/yr	

Exhaust Parameters		
Heat Rate:	1061193	MBtu/hr

Emission Rates
Controlled COGEN Emissions per Turbine

GHG Emissions	CO_2	CH4	CH_4 as CO_2e	N_2O	N_2O as CO_2e	Total CO_2e	
	117.00	0.002	0.055	0.0002	0.066		lb/MMbtu
	124156.72	2.340	58.50	0.234	69.73	124284.94	lb/hr
	543806.42	10.25	256.22	1.02	305.42	544,368.05	tpy (8760 hrs)

1 40 CFR 98 Emission Factors. Global warming potential of 25 for CH4 and 298 for N20.

XTO ENERGY INC.
HUSKY CDP
GENERATOR ENGINES

Uncontrolled Emissions Calculations

					Manufacturer's Data g/hp-hr				AP-42 Factors lb/MMBtu				lb/hr									tpy								
Source ID	Unit Description	Yearly Operating Hours	Rated HP	MMbtu/hp-hr[1]	NOx	CO	VOC[2]	HCHO	SO_2[3]	$PM_{10\ \&\ 2.5}$[4]	Hexane	Aceta-ldehyde	NOx	CO	VOC	HCHO	SO_2	$PM_{10\ \&\ 2.5}$	Hexane	Aceta-ldehyde	HAPs	NOx	CO	VOC	HCHO	SO_2	$PM_{10\ \&\ 2.5}$	Hexane	Aceta-ldehyde	HAPs
GEN1	Caterpillar G3520H Emergency Generator	100	3448	0.006061	1.00	1.68	0.62	0.25	0.00252	0.01006	0.00111	0.00836	7.60	12.77	4.89	1.90	0.05	0.21	0.02	0.17	2.10	0.38	0.64	0.24	0.10	0.00	0.01	0.00	0.01	0.10
GEN2	Caterpillar G3520H Emergency Generator	100	3448	0.006061	1.00	1.68	0.62	0.25	0.00252	0.01006	0.00111	0.00836	7.60	12.77	4.89	1.90	0.05	0.21	0.02	0.17	2.10	0.38	0.64	0.24	0.10	0.00	0.01	0.00	0.01	0.10
GEN3	Caterpillar G3520H Emergency Generator	100	3448	0.006061	1.00	1.68	0.62	0.25	0.00252	0.01006	0.00111	0.00836	7.60	12.77	4.89	1.90	0.05	0.21	0.02	0.17	2.10	0.38	0.64	0.24	0.10	0.00	0.01	0.00	0.01	0.10
GEN4	Caterpillar G3520H Emergency Generator	100	3448	0.006061	1.00	1.68	0.62	0.25	0.00252	0.01006	0.00111	0.00836	7.60	12.77	4.89	1.90	0.05	0.21	0.02	0.17	2.10	0.38	0.64	0.24	0.10	0.00	0.01	0.00	0.01	0.10
GEN5	Caterpillar G3520H Emergency Generator	100	3448	0.006061	1.00	1.68	0.62	0.25	0.00252	0.01006	0.00111	0.00836	7.60	12.77	4.89	1.90	0.05	0.21	0.02	0.17	2.10	0.38	0.64	0.24	0.10	0.00	0.01	0.00	0.01	0.10
GEN6	Caterpillar G3520H Emergency Generator	100	3448	0.006061	1.00	1.68	0.62	0.25	0.00252	0.01006	0.00111	0.00836	7.60	12.77	4.89	1.90	0.05	0.21	0.02	0.17	2.10	0.38	0.64	0.24	0.10	0.00	0.01	0.00	0.01	0.10
GEN7	Caterpillar G3520H Emergency Generator	100	3448	0.006061	1.00	1.68	0.62	0.25	0.00252	0.01006	0.00111	0.00836	7.60	12.77	4.89	1.90	0.05	0.21	0.02	0.17	2.10	0.38	0.64	0.24	0.10	0.00	0.01	0.00	0.01	0.10
GEN8	Caterpillar G3520H Emergency Generator	100	3448	0.006061	1.00	1.68	0.62	0.25	0.00252	0.01006	0.00111	0.00836	7.60	12.77	4.89	1.90	0.05	0.21	0.02	0.17	2.10	0.38	0.64	0.24	0.10	0.00	0.01	0.00	0.01	0.10

[1]Fuel Consumption Rate @ 75% Load from the Gas Engine Rating Pro Report

[2]Emission Factor Includes HCHO

[3]SO_2 Emissions were calculated based on 0.75 gr S/100 scf

[4]PM Emission Factor = Sum of all PM factors in AP-42.

Total Emissions Per Pollutant (TPY)	NOx	CO	VOC	HCHO	SO_2	$PM_{10\ \&\ 2.5}$	Hexane	Aceta-ldehyde	HAPs
	3.04	**5.11**	**1.96**	**0.76**	**0.02**	**0.08**	**0.01**	**0.04**	**0.81**

XTO ENERGY INC.
HUSKY CDP
Greenhouse Gas Emissions - Generators (GEN1 - GEN8)

Emission unit number(s):	GEN1-GEN8		
Source description:	Emergency Generators		
Fuel Consumption			
Input heat rate:	20.90	MMBtu/hr	Fired Capacity
Fuel heat value:	850	Btu/scf	Field Gas
Fuel rate:	24586.3	scf/hr	Input heat rate / fuel heat value
Annual fuel usage:	215.4	MMscf/yr	8760 hrs/yr operation
Hours per year:	100	hrs/yr each	
Exhaust Parameters			
Heat Rate:	20898.328	MBtu/hr	
Emission Rates			
Engine Output:	3448	horsepower	

GHG Emissions	CO_2	CH4	CH_4 as CO_2e	N_2O	N_2O as CO_2e	Total CO_2e	
	413	0.002	0.055	0.0002	0.066		lb/MMbtu
	3139.45	0.046	1.15	0.005	1.37	3141.98	lb/hr
	156.97	0.00	0.06	0.00	0.07	157.10	tpy (8760 hrs)

1 CO2 factor provided by engine manufacturer
2 40 CFR 98 Emission Factors. Global warming potential of 25 for CH4 and 298 for N20.

XTO ENERGY INC.

HUSKY CDP

BURNER CALCULATIONS - COGEN OPERATING SCENARIO

CRITERIA & REGULATED POLLUTANTS

						Manufacturer's Data (NOx, CO, VOC)[1] and AP-42 Factors (SO2, PM)[2]					lb/hr					tpy				
Source ID	Source Description	Fuel Gas (BTU/SCF)	Operating Hours	Burner Output Rating (MMBTU/Hr)	Burner Design Input (MMBTU/Hr)	NOx (lb/MMBtu)	CO (lb/MMBtu)	VOC (lb/MMBtu)	SO_2 (lb/MMscf)	$PM_{10\ \&\ 2.5}$ (lb/MMscf)	NOx	CO	VOC	SO_2	$PM_{10\ \&\ 2.5}$	NOx	CO	VOC	SO_2	$PM_{10\ \&\ 2.5}$
SHTR1	Stabilization Hot Oil Heater (64.83 MMBtu/hr)	850.0	8760	50.00	64.83	0.0267	0.0163	0.0064	2.25	7.6	1.73	1.06	0.41	0.14	0.48	7.58	4.63	1.82	0.63	2.12
SHTR2	Stabilization Hot Oil Heater (64.83 MMBtu/hr)	850.0	8760	50.00	64.83	0.0267	0.0163	0.0064	2.25	7.6	1.73	1.06	0.41	0.14	0.48	7.58	4.63	1.82	0.63	2.12
RHTR1	Regen Heater (39.14 MMBtu/hr)	850.0	8760	27.73	39.14	0.0267	0.0163	0.0064	2.25	7.6	1.05	0.64	0.25	0.09	0.29	4.58	2.79	1.10	0.38	1.28
RHTR2	Regen Heater (39.14 MMBtu/hr)	850.0	8760	27.73	39.14	0.0267	0.0163	0.0064	2.25	7.6	1.05	0.64	0.25	0.09	0.29	4.58	2.79	1.10	0.38	1.28
RHTR3	Regen Heater (39.14 MMBtu/hr)	850.0	8760	27.73	39.14	0.0267	0.0163	0.0064	2.25	7.6	1.05	0.64	0.25	0.09	0.29	4.58	2.79	1.10	0.38	1.28

[1] **NOx, CO, and VOC factors were provided by the equipment manufacturers.**

[2] **SO2 and PM emission factors were adjusted based on site heat content versus the AP-42 value of 1,020 Btu/scf. SO2 factor was adjusted to 7500 gr/MMscf (0.75 gr/100 scf)**

Total (tpy)	NOx	CO	VOC	SO_2	$PM_{10\ \&\ 2.5}$
	28.90	**17.64**	**6.93**	**2.39**	**8.06**

HAZARDOUS AIR POLLUTANTS (HAPs)

						AP-42 Factors lb/MMSCF					lb/hr					tpy				
Source ID	Fuel Gas (BTU/SCF)	Fuel Gas (BTU/SCF)	Operating Hours	Burner Rating (MMBTU/Hr)	Burner Rating (MMBTU/Hr)	Benzene	Toluene	N-Hexane	HCHO	Mercury	Benzene	Toluene	N-Hexane	HCHO	Dichloro benzene	Benzene	Toluene	N-Hexane	HCHO	Mercury
SHTR1	Stabilization Hot Oil Heater (64.83 MMBtu/hr)	850.0	8760	50.00	64.83	0.0021	0.0034	1.8	0.0750	0.0012	0.00	0.00	0.11	0.00	0.00	0.00	0.00	0.50	0.02	0.00
SHTR2	Stabilization Hot Oil Heater (64.83 MMBtu/hr)	850.0	8760	50.00	64.83	0.0021	0.0034	1.8	0.0750	0.0012	0.00	0.00	0.11	0.00	0.00	0.00	0.00	0.50	0.02	0.00
RHTR1	Regen Heater (39.14 MMBtu/hr)	850.0	8760	27.73	39.14	0.0021	0.0034	1.8	0.0750	0.0012	0.00	0.00	0.07	0.00	0.00	0.00	0.00	0.30	0.01	0.00
RHTR2	Regen Heater (39.14 MMBtu/hr)	850.0	8760	27.73	39.14	0.0021	0.0034	1.8	0.0750	0.0012	0.00	0.00	0.07	0.00	0.00	0.00	0.00	0.30	0.01	0.00
RHTR3	Regen Heater (39.14 MMBtu/hr)	850.0	8760	27.73	39.14	0.0021	0.0034	1.8	0.0750	0.0012	0.00	0.00	0.07	0.00	0.00	0.00	0.00	0.30	0.01	0.00

***Source: AP-42 Table 1.4-1, 1.4-2, & 1.4-3**

Total Individual HAPS (tpy)	Benzene	Toluene	N-Hexane	HCHO	Dichloro benzene
	0.00	**0.00**	**1.91**	**0.08**	**0.00**

Total Combined HAPS (tpy)	**2.00**

XTO ENERGY INC.

HUSKY CDP

BURNER CALCULATIONS

CRITERIA & REGULATED POLLUTANTS

						Manufacturer's Data (NOx, CO, VOC) and AP-42 Factors (SO2, PM)[2]					lb/hr					tpy				
Source ID	Source Description	Fuel Gas (BTU/SCF)	Operating Hours	Burner Output Rating (MMBTU/Hr)	Burner Design Input (MMBTU/Hr)	NOx (lb/MMBtu)	CO (lb/MMBtu)	VOC (lb/MMBtu)	SO_2 (lb/MMscf)	$PM_{10\ \&\ 2.5}$ (lb/MMscf)	NOx	CO	VOC	SO_2	$PM_{10\ \&\ 2.5}$	NOx	CO	VOC	SO_2	$PM_{10\ \&\ 2.5}$
SHTR1	Stabilization Hot Oil Heater (64.83 MMBtu/hr)	850.0	8760	50.00	64.83	0.0267	0.0163	0.0064	2.25	7.6	1.73	1.06	0.41	0.14	0.48	7.58	4.63	1.82	0.63	2.12
SHTR2	Stabilization Hot Oil Heater (64.83 MMBtu/hr)	850.0	8760	50.00	64.83	0.0267	0.0163	0.0064	2.25	7.6	1.73	1.06	0.41	0.14	0.48	7.58	4.63	1.82	0.63	2.12
SHTR3	Stabilization Hot Oil Heater (64.83 MMBtu/hr)	850.0	8760	50.00	64.83	0.0267	0.0163	0.0064	2.25	7.6	1.73	1.06	0.41	0.14	0.48	7.58	4.63	1.82	0.63	2.12
SHTR4	Stabilization Hot Oil Heater (64.83 MMBtu/hr)	850.0	8760	50.00	64.83	0.0267	0.0163	0.0064	2.25	7.6	1.73	1.06	0.41	0.14	0.48	7.58	4.63	1.82	0.63	2.12
SHTR5	Stabilization Hot Oil Heater (64.83 MMBtu/hr)	850.0	8760	50.00	64.83	0.0267	0.0163	0.0064	2.25	7.6	1.73	1.06	0.41	0.14	0.48	7.58	4.63	1.82	0.63	2.12
SHTR6	Stabilization Hot Oil Heater (64.83 MMBtu/hr)	850.0	8760	50.00	64.83	0.0267	0.0163	0.0064	2.25	7.6	1.73	1.06	0.41	0.14	0.48	7.58	4.63	1.82	0.63	2.12
SHTR7	Stabilization Hot Oil Heater (64.83 MMBtu/hr)	850.0	8760	50.00	64.83	0.0267	0.0163	0.0064	2.25	7.6	1.73	1.06	0.41	0.14	0.48	7.58	4.63	1.82	0.63	2.12
SHTR8	Stabilization Hot Oil Heater (64.83 MMBtu/hr)	850.0	8760	50.00	64.83	0.0267	0.0163	0.0064	2.25	7.6	1.73	1.06	0.41	0.14	0.48	7.58	4.63	1.82	0.63	2.12
SHTR9	Stabilization Hot Oil Heater (64.83 MMBtu/hr)	850.0	8760	50.00	64.83	0.0267	0.0163	0.0064	2.25	7.6	1.73	1.06	0.41	0.14	0.48	7.58	4.63	1.82	0.63	2.12
SHTR10	Stabilization Hot Oil Heater (64.83 MMBtu/hr)	850.0	8760	50.00	64.83	0.0267	0.0163	0.0064	2.25	7.6	1.73	1.06	0.41	0.14	0.48	7.58	4.63	1.82	0.63	2.12
SHTR11	Stabilization Hot Oil Heater (64.83 MMBtu/hr)	850.0	8760	50.00	64.83	0.0267	0.0163	0.0064	2.25	7.6	1.73	1.06	0.41	0.14	0.48	7.58	4.63	1.82	0.63	2.12
SHTR12	Stabilization Hot Oil Heater (64.83 MMBtu/hr)	850.0	8760	50.00	64.83	0.0267	0.0163	0.0064	2.25	7.6	1.73	1.06	0.41	0.14	0.48	7.58	4.63	1.82	0.63	2.12
CHTR1	Cryo Hot Oil Heater (103.99 MMBtu/hr)	850.0	8760	80.00	103.99	0.0334	0.0163	0.0064	2.25	7.6	3.47	1.70	0.67	0.23	0.77	15.21	7.42	2.92	1.00	3.39
CHTR2	Cryo Hot Oil Heater (103.99 MMBtu/hr)	850.0	8760	80.00	103.99	0.0334	0.0163	0.0064	2.25	7.6	3.47	1.70	0.67	0.23	0.77	15.21	7.42	2.92	1.00	3.39
CHTR3	Cryo Hot Oil Heater (103.99 MMBtu/hr)	850.0	8760	80.00	103.99	0.0334	0.0163	0.0064	2.25	7.6	3.47	1.70	0.67	0.23	0.77	15.21	7.42	2.92	1.00	3.39
RHTR1	Regen Heater (39.14 MMBtu/hr)	850.0	8760	27.73	39.14	0.0267	0.0163	0.0064	2.25	7.6	1.05	0.64	0.25	0.09	0.29	4.58	2.79	1.10	0.38	1.28
RHTR2	Regen Heater (39.14 MMBtu/hr)	850.0	8760	27.73	39.14	0.0267	0.0163	0.0064	2.25	7.6	1.05	0.64	0.25	0.09	0.29	4.58	2.79	1.10	0.38	1.28
RHTR3	Regen Heater (39.14 MMBtu/hr)	850.0	8760	27.73	39.14	0.0267	0.0163	0.0064	2.25	7.6	1.05	0.64	0.25	0.09	0.29	4.58	2.79	1.10	0.38	1.28

[1] **NOx, CO, and VOC factors were provided by the equipment manufacturers.**

[2] **SO2 and PM emission factors were adjusted based on site heat content versus the AP-42 value of 1,020 Btu/scf. SO2 factor was adjusted to 7500 gr/MMscf (0.75 gr/100 scf)**

Total (tpy)	NOx	CO	VOC	SO_2	$PM_{10\ \&\ 2.5}$
	150.35	**86.20**	**33.84**	**11.67**	**39.40**

XTO ENERGY INC.

HUSKY CDP

BURNER CALCULATIONS

HAZARDOUS AIR POLLUTANTS (HAPs)

						AP-42 Factors lb/MMSCF					lb/hr					tpy				
Source ID	Fuel Gas (BTU/SCF)	Fuel Gas (BTU/SCF)	Operating Hours	Burner Rating (MMBTU/Hr)	Burner Rating (MMBTU/Hr)	Benzene	Toluene	N-Hexane	HCHO	Mercury	Benzene	Toluene	N-Hexane	HCHO	Dichloro benzene	Benzene	Toluene	N-Hexane	HCHO	Mercury
SHTR1	Stabilization Hot Oil Heater (64.83 MMBtu/hr)	850.0	8760	50.00	64.83	0.0021	0.0034	1.8	0.0750	0.0021	0.00	0.00	0.11	0.00	0.00	0.00	0.00	0.50	0.02	0.00
SHTR2	Stabilization Hot Oil Heater (64.83 MMBtu/hr)	850.0	8760	50.00	64.83	0.0021	0.0034	1.8	0.0750	0.0012	0.00	0.00	0.11	0.00	0.00	0.00	0.00	0.50	0.02	0.00
SHTR3	Stabilization Hot Oil Heater (64.83 MMBtu/hr)	850.0	8760	50.00	64.83	0.0021	0.0034	1.8	0.0750	0.0012	0.00	0.00	0.11	0.00	0.00	0.00	0.00	0.50	0.02	0.00
SHTR4	Stabilization Hot Oil Heater (64.83 MMBtu/hr)	850.0	8760	50.00	64.83	0.0021	0.0034	1.8	0.0750	0.0012	0.00	0.00	0.11	0.00	0.00	0.00	0.00	0.50	0.02	0.00
SHTR5	Stabilization Hot Oil Heater (64.83 MMBtu/hr)	850.0	8760	50.00	64.83	0.0021	0.0034	1.8	0.0750	0.0012	0.00	0.00	0.11	0.00	0.00	0.00	0.00	0.50	0.02	0.00
SHTR6	Stabilization Hot Oil Heater (64.83 MMBtu/hr)	850.0	8760	50.00	64.83	0.0021	0.0034	1.8	0.0750	0.0012	0.00	0.00	0.11	0.00	0.00	0.00	0.00	0.50	0.02	0.00
SHTR7	Stabilization Hot Oil Heater (64.83 MMBtu/hr)	850.0	8760	50.00	64.83	0.0021	0.0034	1.8	0.0750	0.0012	0.00	0.00	0.11	0.00	0.00	0.00	0.00	0.50	0.02	0.00
SHTR8	Stabilization Hot Oil Heater (64.83 MMBtu/hr)	850.0	8760	50.00	64.83	0.0021	0.0034	1.8	0.0750	0.0012	0.00	0.00	0.11	0.00	0.00	0.00	0.00	0.50	0.02	0.00
SHTR9	Stabilization Hot Oil Heater (64.83 MMBtu/hr)	850.0	8760	50.00	64.83	0.0021	0.0034	1.8	0.0750	0.0012	0.00	0.00	0.11	0.00	0.00	0.00	0.00	0.50	0.02	0.00
SHTR10	Stabilization Hot Oil Heater (64.83 MMBtu/hr)	850.0	8760	50.00	64.83	0.0021	0.0034	1.8	0.0750	0.0012	0.00	0.00	0.11	0.00	0.00	0.00	0.00	0.50	0.02	0.00
SHTR11	Stabilization Hot Oil Heater (64.83 MMBtu/hr)	850.0	8760	50.00	64.83	0.0021	0.0034	1.8	0.0750	0.0012	0.00	0.00	0.11	0.00	0.00	0.00	0.00	0.50	0.02	0.00
SHTR12	Stabilization Hot Oil Heater (64.83 MMBtu/hr)	850.0	8760	50.00	64.83	0.0021	0.0034	1.8	0.0750	0.0012	0.00	0.00	0.11	0.00	0.00	0.00	0.00	0.50	0.02	0.00
CHTR1	Cryo Hot Oil Heater (103.99 MMBtu/hr)	850.0	8760	80.00	103.99	0.0021	0.0034	1.8	0.0750	0.0012	0.00	0.00	0.18	0.01	0.00	0.00	0.00	0.80	0.03	0.00
CHTR2	Cryo Hot Oil Heater (103.99 MMBtu/hr)	850.0	8760	80.00	103.99	0.0021	0.0034	1.8	0.0750	0.0012	0.00	0.00	0.18	0.01	0.00	0.00	0.00	0.80	0.03	0.00
CHTR3	Cryo Hot Oil Heater (103.99 MMBtu/hr)	850.0	8760	80.00	103.99	0.0021	0.0034	1.8	0.0750	0.0012	0.00	0.00	0.18	0.01	0.00	0.00	0.00	0.80	0.03	0.00
RHTR1	Regen Heater (39.14 MMBtu/hr)	850.0	8760	27.73	39.14	0.0021	0.0034	1.8	0.0750	0.0012	0.00	0.00	0.07	0.00	0.00	0.00	0.00	0.30	0.01	0.00
RHTR2	Regen Heater (39.14 MMBtu/hr)	850.0	8760	27.73	39.14	0.0021	0.0034	1.8	0.0750	0.0012	0.00	0.00	0.07	0.00	0.00	0.00	0.00	0.30	0.01	0.00
RHTR3	Regen Heater (39.14 MMBtu/hr)	850.0	8760	27.73	39.14	0.0021	0.0034	1.8	0.0750	0.0012	0.00	0.00	0.07	0.00	0.00	0.00	0.00	0.30	0.01	0.00

***Source: AP-42 Table 1.4-1, 1.4-2, & 1.4-3**

Total Individual HAPS (tpy)	Benzene	Toluene	N-Hexane	HCHO	Dichloro benzene
	0.01	**0.02**	**9.33**	**0.39**	**0.01**

Total Combined HAPS (tpy)	**9.76**

XTO ENERGY INC.
HUSKY CDP
HEATERS - EXHAUST STACK FLOW & FUEL CONSUMPTION RATES

Exhaust Stack and Fuel Consumption Data

Source	Stabilization Heaters
Burner Rating (btu/hr)	64,830,000
Heating Value (btu/scf)	850.0
Stack Temperature (°F)	488
Stack Diameter (ft)	4.0
Stack Height (ft)	33.0
Fuel Consumption (scf/hr)	76271
Fuel Consumption (scf/day)	1830494
Fuel Consumption (mmscf/year)	668.1
Air Injection Rate (scf/hr)	880925.3
Total exhaust flow rate @ STP (scf/hr)	957195.88
Total exhaust flow rate @ STP (scf/sec)	265.9
Total exhaust flow rate @ 488 °F (acf/hr)	1745041.7
Total exhaust flow rate @ 488 °F (acf/sec)	484.7
Exhaust Stack Exit Velocity @ STP (ft/sec)	21.2
Exhaust Stack Exit Velocity @ 488 °F (ft/sec)	38.6
Source	Cryogenic Heaters
Burner Rating (btu/hr)	103,990,000
Heating Value (btu/scf)	850.0
Stack Temperature (°F)	599
Stack Diameter (ft)	4.0
Stack Height (ft)	76.9
Fuel Consumption (scf/hr)	122341
Fuel Consumption (scf/day)	2936188
Fuel Consumption (mmscf/year)	1071.7
Air Injection Rate (scf/hr)	1471764.4
Total exhaust flow rate @ STP (scf/hr)	1594105.53
Total exhaust flow rate @ STP (scf/sec)	442.8
Total exhaust flow rate @ 599 °F (acf/hr)	3246457.2
Total exhaust flow rate @ 599 °F (acf/sec)	901.8
Exhaust Stack Exit Velocity @ STP (ft/sec)	35.2
Exhaust Stack Exit Velocity @ 599 °F (ft/sec)	71.8
Source	Regeneration Heaters
Burner Rating (btu/hr)	39,140,000
Heating Value (btu/scf)	850.0
Stack Temperature (°F)	470
Stack Diameter (ft)	2.7
Stack Height (ft)	28.5
Fuel Consumption (scf/hr)	46047
Fuel Consumption (scf/day)	1105129
Fuel Consumption (mmscf/year)	403.4
Air Injection Rate (scf/hr)	600914.1
Total exhaust flow rate @ STP (scf/hr)	646961.18
Total exhaust flow rate @ STP (scf/sec)	179.7
Total exhaust flow rate @ 470 °F (acf/hr)	1157065.2
Total exhaust flow rate @ 470 °F (acf/sec)	321.4
Exhaust Stack Exit Velocity @ STP (ft/sec)	32.2
Exhaust Stack Exit Velocity @ 470 °F (ft/sec)	57.5

XTO ENERGY INC.
HUSKY CDP
Greenhouse Gas Emissions - Stabilizer Heaters

Emission unit number(s): SHTR1-SHTR12
Source description: Stabilization Hot Oil Heater(64.83 MMBtu/hr)

Fuel Consumption

Input heat rate:	64.83	MMBtu/hr	Capacity
Fuel heat value:	850	Btu/scf	Field Gas
Fuel rate:	76270.6	scf/hr	Input heat rate / fuel heat value
Annual fuel usage:	668.1	MMscf/yr	8760 hrs/yr operation
Hours per year:	8760	hrs/yr	

Exhaust Parameters

Heat Rate:	64830	MBtu/hr	
Exhaust temp (Tstk):	488	°F	Manufacturer
Stack diameter:	4.00	ft	Manufacturer
Stack height:	32.6	ft	Manufacturer
Exhaust velocity:	35.10	ft/sec	Manufacturer

Emission Rates
Uncontrolled Heater Emissions

GHG Emissions	CO_2	CH4	CH_4 as CO_2e	N_2O	N_2O as CO_2e	Total CO_2e	
	117.00	0.002	0.055	0.0002	0.066		lb/MMbtu
	7584.93	0.143	3.57	0.014	4.26	7592.77	lb/hr
	33222.02	0.63	15.65	0.06	18.66	33256.33	tpy (8760 hrs)

1 40 CFR 98 Emission Factors. Global warming potential of 25 for CH4 and 298 for N20.

XTO ENERGY INC.
HUSKY CDP
Greenhouse Gas Emissions - Cryo Heaters

Emission unit number(s): CHTR1-CHTR3
Source description: Cryo Hot Oil Heater(103.99 MMBtu/hr)

Fuel Consumption

Input heat rate:	103.99	MMBtu/hr	Capacity
Fuel heat value:	850	Btu/scf	Field Gas
Fuel rate:	122341.2	scf/hr	Input heat rate / fuel heat value
Annual fuel usage:	1071.7	MMscf/yr	8760 hrs/yr operation
Hours per year:	8760	hrs/yr	

Exhaust Parameters

Heat Rate:	103990	MBtu/hr	
Exhaust temp (Tstk):	599	°F	Manufacturer
Stack diameter:	4.00	ft	Manufacturer
Stack height:	34.3	ft	Manufacturer
Exhaust velocity:	65.30	ft/sec	Manufacturer

Emission Rates
Uncontrolled Heater Emissions

GHG Emissions	CO_2	CH4	CH_4 as CO_2e	N_2O	N_2O as CO_2e	Total CO_2e	
	117.00	0.002	0.055	0.0002	0.066		lb/MMbtu
	12166.55	0.229	5.73	0.023	6.83	12179.11	lb/hr
	53289.49	1.00	25.11	0.10	29.93	53344.52	tpy (8760 hrs)

1 40 CFR 98 Emission Factors. Global warming potential of 25 for CH4 and 298 for N20.

XTO ENERGY INC.
HUSKY CDP
Greenhouse Gas Emissions - Regen Heaters

Emission unit number(s): RHTR1-RHTR3
Source description: Regen Heater(39.14 MMBtu/hr)

Fuel Consumption			
Input heat rate:	39.14	MMBtu/hr	Capacity
Fuel heat value:	850	Btu/scf	Field Gas
Fuel rate:	46047.1	scf/hr	Input heat rate / fuel heat value
Annual fuel usage:	403.4	MMscf/yr	8760 hrs/yr operation
Hours per year:	8760	hrs/yr	

Exhaust Parameters			
Heat Rate:	39140	MBtu/hr	
Exhaust temp (Tstk):	470	°F	Manufacturer
Stack diameter:	2.67	ft	Manufacturer
Stack height:	27.1	ft	Manufacturer
Exhaust velocity:	52.30	ft/sec	Manufacturer

Emission Rates
Uncontrolled Heater Emissions

GHG Emissions	CO_2	CH4	CH_4 as CO_2e	N_2O	N_2O as CO_2e	Total CO_2e	
	117.00	0.002	0.055	0.0002	0.066		lb/MMbtu
	4579.27	0.086	2.16	0.009	2.57	4584.00	lb/hr
	20057.22	0.38	9.45	0.04	11.26	20077.94	tpy (8760 hrs)

1 40 CFR 98 Emission Factors. Global warming potential of 25 for CH4 and 298 for N20.

XTO ENERGY INC.
HUSKY CDP
DUAL TIP FLARE SUMMARY - FL1/FL2/FL3

Flare Emissions Summary Table

Stream Source[a,b,c]	NOx			CO			Total VOC			SO_2			$PM_{10\ \&\ 2.5}$			Total HAPs		
	lb/hr	lb/day	TPY	lb/hr	lb/day	TPY	lb/hr	lb/day	TPY	lb/hr	lb/day	TPY	lb/hr	lb/day	TPY	lb/hr	lb/day	TPY
Stabilizer Overhead SSM Gas (FL1 - FL3OVHD-SSM)	61.51	123.03	11.20	122.80	245.61	22.35	404.29	808.57	73.58	0.00	0.00	0.00	3.32	6.64	0.60	4.45	8.91	0.81
Cryo Blowdown SSM Gas (FL1-FL3CRYO-SSM)	102.43	204.85	18.64	204.48	408.96	37.22	210.13	420.26	38.24	0.05	0.10	0.01	5.29	10.57	0.96	1.31	2.62	0.24
Pilot Fuel & Purge Gas (FL1)	1.34	32.14	5.87	2.67	64.16	11.71	0.40	9.65	1.76	0.00	0.00	0.00	0.07	1.74	0.32	0.00	0.00	0.00
Pilot Fuel & Purge Gas (FL2)	1.34	32.14	5.87	2.67	64.16	11.71	0.40	9.65	1.76	0.00	0.00	0.00	0.07	1.74	0.32	0.00	0.00	0.00
Pilot Fuel & Purge Gas (FL3)	Operated only as backup to FL1-FL2																	
Total Emissions	**105.10**	**269.13**	**41.57**	**209.83**	**537.29**	**82.99**	**405.09**	**827.87**	**115.35**	**0.05**	**0.10**	**0.01**	**5.43**	**14.04**	**2.20**	**1.31**	**8.91**	**1.05**

Footnotes:

[a] SSM gas can be routed to one or any combination of the three flares. For emissions tracking purposes in accordance with the permit, XTO Energy is requesting a combined emisison limit for flaring.

[b] SSM Stabilizer Overhead Gas and Cryo Blowdown SSM events can not occur wihtin the same 24 hour period. PTE for total hourly rate and the Q/D analysis assumes the highest lb/day & lb/hr value from either SSM stream to be conservative.

[c] SSM Stabilizer Overhead Gas and Cryo Blowdown SSM events can not occur wihtin the same 24 hour period, so XTO conservatively is assuming each can occur 182 days per year.

XTO ENERGY INC.
HUSKY CDP
DUAL TIP FLARE CRYO SSM HOURLY EMISSIONS (COMBINED BETWEEN ALL FLARES)

DUAL TIP 20 MMSCFD FLARES - HOURLY (FL1 - FL3CRYO-MSS)

Maximum Hourly CRYO-SSM Emission Rates and Composition to Flare[a,b]

Component	CRYO Blowdown SSM Gas	Total	Destruction Efficiency	Exhaust Stream (controlled)
	(lb/hr)	(lb/hr)	(%)	(lb/hr)
Water	0.00	0.00	0%	**0.00**
Hydrogen Sulfide	0.03	0.03	98%	**0.00**
Nitrogen	354.41	354.41	0%	**354.41**
Carbon Dioxide	118.32	118.32	0%	**118.32**
Methane	17637.02	17637.02	98%	**352.74**
Ethane	7337.19	7337.19	98%	**146.74**
Propane	6122.58	6122.58	98%	**122.45**
Iso-butane	974.30	974.30	98%	**19.49**
N-butane	2233.54	2233.54	98%	**44.67**
Iso-pentane	467.80	467.80	98%	**9.36**
N-pentane	422.16	422.16	98%	**8.44**
Cyclopentanes	0.00	0.00	98%	**0.00**
Other Hexanes	122.65	122.65	98%	**2.45**
n-Hexane	40.88	40.88	98%	**0.82**
Methylcyclopentane	26.62	26.62	98%	**0.53**
Benzene	24.71	24.71	98%	**0.49**
Cyclohexane	39.93	39.93	98%	**0.80**
2,2,4 Trimethylpentane	0.00	0.00	98%	**0.00**
Other Heptanes	15.85	15.85	98%	**0.32**
Methylcyclohexane	15.53	15.53	98%	**0.31**
n-Heptane	0.00	0.00	98%	**0.00**
Toluene	0.00	0.00	98%	**0.00**
Octanes	0.00	0.00	98%	**0.00**
Ethylbenzene	0.00	0.00	98%	**0.00**
M&P-Xylene	0.00	0.00	98%	**0.00**
Nonanes	0.00	0.00	98%	**0.00**
Decanes	0.00	0.00	98%	**0.00**
Undecanes Plus	0.00	0.00	98%	**0.00**
Total	**35953.49**	**35953.49**	**--**	**1182.34**
Total VOC	**10506.53**	**10506.53**	**--**	**210.13**
Total HAP	**65.59**	**65.59**	**--**	**1.31**
Heating Value (Btu/scf)	1,237.03	**1,237.03**		
Molecular Weight	22.74	**--**		
SO2 Emissions (lb/hr)	0.05	**0.05**		
Volumetric Flow (scf/hr)	600,000.00	**600,000.00**		
Heat Release (MMBtu/hr)	742.22	**742.22**		

Criteria Pollutant Emissions from Flare [b]

Component	Emission Rate	Emission Factor	Emission Factor Units
	(lb/hr)		
NO_X	102.43	0.138	lb/MMBtu
CO	204.48	0.2755	lb/MMBtu
SO_2	0.05	--	--
PM_{10}	5.29	7.60	lb/MMscf
$PM_{2.5}$	5.29	7.60	lb/MMscf
H_2S	0.00	--	--

Flare DRE	98.00	%

CRYO-MSS Flare Time	2.00	hrs/day
	364.00	hrs/year

Footnotes:

[a] Uncontrolled stream properties determined via ProMax.

[b] Flare CO and NOx emission factors from TCEQ Air Permit Techincal Guidance for Chemical Sources. PM and PM2.5 emission factors from AP-42, Table 1.4-1 and 1.4-2, July 1998. SO2 emissions assume 100% conversion of H2S to SO2.

XTO ENERGY INC.
HUSKY CDP
DUAL TIP FLARE CRYO SSM ANNUAL EMISSIONS (COMBINED BETWEEN ALL FLARES)

DUAL TIP 20 MMSCFD FLARES - ANNUAL (FL1 - FL3CRYO-MSS)

Annual Emission CRYO-SSM Rates and Composition to Flare[a,b]

Component	CRYO Blowdown SSM Gas	Total	Destruction Efficiency	Exhaust Stream (controlled)
	(ton/yr)	ton/yr	(%)	(ton/yr)
Water	0.00	0.00	0%	**0.00**
Hydrogen Sulfide	0.00	0.00	98%	**0.00**
Nitrogen	64.50	64.50	0%	**64.50**
Carbon Dioxide	21.53	21.53	0%	**21.53**
Methane	3209.94	3209.94	98%	**64.20**
Ethane	1335.37	1335.37	98%	**26.71**
Propane	1114.31	1114.31	98%	**22.29**
Iso-butane	177.32	177.32	98%	**3.55**
N-butane	406.50	406.50	98%	**8.13**
Iso-pentane	85.14	85.14	98%	**1.70**
N-pentane	76.83	76.83	98%	**1.54**
Cyclopentanes	0.00	0.00	98%	**0.00**
Other Hexanes	22.32	22.32	98%	**0.45**
n-Hexane	7.44	7.44	98%	**0.15**
Methylcyclopentane	4.84	4.84	98%	**0.10**
Benzene	4.50	4.50	98%	**0.09**
Cyclohexane	7.27	7.27	98%	**0.15**
2,2,4 Trimethylpentane	0.00	0.00	98%	**0.00**
Other Heptanes	2.88	2.88	98%	**0.06**
Methylcyclohexane	2.83	2.83	98%	**0.06**
n-Heptane	0.00	0.00	98%	**0.00**
Toluene	0.00	0.00	98%	**0.00**
Octanes	0.00	0.00	98%	**0.00**
Ethylbenzene	0.00	0.00	98%	**0.00**
M&P-Xylene	0.00	0.00	98%	**0.00**
Nonanes	0.00	0.00	98%	**0.00**
Decanes	0.00	0.00	98%	**0.00**
Undecanes Plus	0.00	0.00	98%	**0.00**
Total	**6543.53**	**6543.53**	**--**	**215.19**
Total VOC	**1912.19**	**1912.19**	**--**	**38.24**
Total HAP	**11.94**	**0.00**	**--**	**0.24**
Heating Value (Btu/scf)	1,237.03	**1,237.03**		
Molecular Weight	22.74	**--**		
SO2 Emissions (lb/hr)	0.01	**0.01**		
Volumetric Flow (scf/year)	218,400,000	**218,400,000**		
Heat Release (MMBtu/hr)	270,166.62	**270,166.62**		

Criteria Pollutant Emissions from Flare [b]

Component	Emission Rate	Emission Factor	Emission Factor Units
	ton/yr		
NO_X	18.64	0.138	lb/MMBtu
CO	37.22	0.5496	lb/MMBtu
SO_2	0.22	--	--
PM_{10}	0.83	7.60	lb/MMscf
$PM_{2.5}$	0.83	7.60	lb/MMscf
H_2S	0.00	--	--

Flare DRE	98.00	%

CRYO-MSS Flare Time	2.00	hrs/day
	364.00	hrs/year
	1,200,000	**MMscfd**

Footnotes:

[a] Uncontrolled stream properties determined via ProMax.

[b] Flare CO and NOx emission factors from TCEQ Air Permit Techincal Guidance for Chemical Sources. PM and PM2.5 emission factors from AP-42, Table 1.4-1 and 1.4-2, July 1998. SO2 emissions assume 100% conversion of H2S to SO2.

XTO ENERGY INC.
HUSKY CDP
DUAL TIP FLARE OVERHEAD SSM HOURLY EMISSIONS (COMBINED BETWEEN ALL FLARES)

DUAL TIP 20 MMSCFD FLARES - HOURLY (FL1 - FL3OVHD-MSS)

Maximum Hourly OVHD-SSM Emission Rates and Composition to Flare[a,b]

Component	Stabilizer Overhead SSM Gas (lb/hr)	Total (lb/hr)	Destruction Efficiency (%)	Exhaust Stream (controlled) (lb/hr)
Water	47.18	47.18	0%	**47.18**
Hydrogen Sulfide	0.00	0.00	98%	**0.00**
Nitrogen	0.00	0.00	0%	**0.00**
Carbon Dioxide	10.87	10.87	0%	**10.87**
Methane	1.59	1.59	98%	**0.03**
Ethane	2228.53	2228.53	98%	**44.57**
Propane	14142.13	14142.13	98%	**282.84**
Iso-butane	1688.60	1688.60	98%	**33.77**
N-butane	2639.16	2639.16	98%	**52.78**
Iso-pentane	445.60	445.60	98%	**8.91**
N-pentane	427.78	427.78	98%	**8.56**
Cyclopentanes	0.00	0.00	98%	**0.00**
Other Hexanes	191.60	191.60	98%	**3.83**
n-Hexane	97.93	97.93	98%	**1.96**
Methylcyclopentane	74.85	74.85	98%	**1.50**
Benzene	73.33	73.33	98%	**1.47**
Cyclohexane	141.38	141.38	98%	**2.83**
2,2,4 Trimethylpentane	0.00	0.00	98%	**0.00**
Other Heptanes	34.66	34.66	98%	**0.69**
Methylcyclohexane	92.17	92.17	98%	**1.84**
n-Heptane	54.46	54.46	98%	**1.09**
Toluene	40.97	40.97	98%	**0.82**
Octanes	39.51	39.51	98%	**0.79**
Ethylbenzene	0.00	0.00	98%	**0.00**
M&P-Xylene	10.49	10.49	98%	**0.21**
Nonanes	12.67	12.67	98%	**0.25**
Decanes	7.03	7.03	98%	**0.14**
Undecanes Plus	0.00	0.00	98%	**0.00**
Total	**22502.50**	**22502.50**	**--**	**506.94**
Total VOC	**20214.33**	**20214.33**	**--**	**404.29**
Total HAP	**222.72**	**222.72**	**--**	**4.45**
Heating Value (Btu/scf)	2,377.32	**2,377.32**		
Molecular Weight	45.54	**--**		
SO2 Emissions (lb/hr)	0.00	**0.00**		
Volumetric Flow (scf/hr)	187,500.00	**187,500.00**		
Heat Release (MMBtu/hr)	445.75	**445.75**		

Criteria Pollutant Emissions from Flare [b]

Component	Emission Rate (lb/hr)	Emission Factor	Emission Factor Units
NO_X	61.51	0.138	lb/MMBtu
CO	122.80	0.2755	lb/MMBtu
SO_2	0.00	--	--
PM_{10}	3.32	7.60	lb/MMscf
$PM_{2.5}$	3.32	7.60	lb/MMscf
H_2S	0.00	--	--

Flare DRE	98.00	%

OVHD-MSS Flare Time	2.00	hrs/day
	364.00	hrs/year

Footnotes:

[a] Uncontrolled stream properties determined via ProMax.

[b] Flare CO and NOx emission factors from TCEQ Air Permit Techincal Guidance for Chemical Sources. PM and PM2.5 emission factors from AP-42, Table 1.4-1 and 1.4-2, July 1998. SO2 emissions assume 100% conversion of H2S to SO2.

XTO ENERGY INC.
HUSKY CDP
DUAL TIP FLARE OVERHEAD SSM ANNUAL EMISSIONS (COMBINED BETWEEN ALL FLARES)

DUAL TIP 20 MMSCFD FLARES - ANNUAL (FL1 - FL3OVHD-MSS)

Annual Emission OVHD-SSM Rates and Composition to Flare[a,b]

Component	Stabilizer Overhead SSM Gas	Total	Destruction Efficiency	Exhaust Stream (controlled)
	(ton/yr)	ton/yr	(%)	(ton/yr)
Water	8.59	8.59	0%	**8.59**
Hydrogen Sulfide	0.00	0.00	98%	**0.00**
Nitrogen	0.00	0.00	0%	**0.00**
Carbon Dioxide	1.98	1.98	0%	**1.98**
Methane	0.29	0.29	98%	**0.01**
Ethane	405.59	405.59	98%	**8.11**
Propane	2573.87	2573.87	98%	**51.48**
Iso-butane	307.33	307.33	98%	**6.15**
N-butane	480.33	480.33	98%	**9.61**
Iso-pentane	81.10	81.10	98%	**1.62**
N-pentane	77.86	77.86	98%	**1.56**
Cyclopentanes	0.00	0.00	98%	**0.00**
Other Hexanes	34.87	34.87	98%	**0.70**
n-Hexane	17.82	17.82	98%	**0.36**
Methylcyclopentane	13.62	13.62	98%	**0.27**
Benzene	13.35	13.35	98%	**0.27**
Cyclohexane	25.73	25.73	98%	**0.51**
2,2,4 Trimethylpentane	0.00	0.00	98%	**0.00**
Other Heptanes	6.31	6.31	98%	**0.13**
Methylcyclohexane	16.78	16.78	98%	**0.34**
n-Heptane	9.91	9.91	98%	**0.20**
Toluene	7.46	7.46	98%	**0.15**
Octanes	7.19	7.19	98%	**0.14**
Ethylbenzene	0.00	0.00	98%	**0.00**
M&P-Xylene	1.91	1.91	98%	**0.04**
Nonanes	2.31	2.31	98%	**0.05**
Decanes	1.28	1.28	98%	**0.03**
Undecanes Plus	0.00	0.00	98%	**0.00**
Total	**4095.45**	**4095.45**	**--**	**92.26**
Total VOC	**3679.01**	**3679.01**	**--**	**73.58**
Total HAP	**40.54**	**1.91**	**--**	**0.81**
Heating Value (Btu/scf)	2,377.32	**2,377.32**		
Molecular Weight	45.54	**--**		
SO2 Emissions (lb/hr)	0.01	**0.01**		
Volumetric Flow (scf/year)	68,250,000	**68,250,000**		
Heat Release (MMBtu/hr)	162,251.83	**162,251.83**		

Criteria Pollutant Emissions from Flare [b]

Component	Emission Rate	Emission Factor	Emission Factor Units
	ton/yr		
NO_X	11.20	0.138	lb/MMBtu
CO	22.35	0.5496	lb/MMBtu
SO_2	0.00	--	--
PM_{10}	0.26	7.60	lb/MMscf
$PM_{2.5}$	0.26	7.60	lb/MMscf
H_2S	0.00	--	--

Flare DRE	98.00	%

OVHD-MSS Flare Time	2.00	hrs/day
	364.00	hrs/year

Footnotes:

[a] Uncontrolled stream properties determined via ProMax.

[b] Flare CO and NOx emission factors from TCEQ Air Permit Techincal Guidance for Chemical Sources. PM and PM2.5 emission factors from AP-42, Table 1.4-1 and 1.4-2, July 1998. SO2 emissions assume 100% conversion of H2S to SO2.

XTO ENERGY INC.
HUSKY CDP
DUAL TIP FLARE PILOT/PURGE GAS HOURLY EMISSIONS (COMBINED BETWEEN ALL FLARES)

DUAL TIP 20 MMSCFD FLARES - HOURLY (FL1 - FL3)

Maximum Hourly Emission Rates and Composition to Flare[a,b]

Component	Pilot Fuel	L.P. Flare Header Purge Gas	H.P. Flare Header Purge Gas	Total	Destruction Efficiency	Exhaust Stream (controlled)
	(lb/hr)	(lb/hr)	(lb/hr)	(lb/hr)	(%)	(lb/hr)
Water	0.00	0.00	0.00	0.00	0%	**0.00**
Hydrogen Sulfide	0.00	0.00	0.00	0.00	98%	**0.00**
Nitrogen	0.17	2.69	3.36	6.21	0%	**6.21**
Carbon Dioxide	0.00	0.00	0.00	0.00	0%	**0.00**
Methane	8.39	134.21	167.77	310.37	98%	**6.21**
Ethane	3.36	53.69	67.11	124.16	98%	**2.48**
Propane	0.54	8.69	10.86	20.10	98%	**0.40**
Iso-butane	0.00	0.00	0.00	0.00	98%	**0.00**
N-butane	0.00	0.00	0.00	0.00	98%	**0.00**
Iso-pentane	0.00	0.00	0.00	0.00	98%	**0.00**
N-pentane	0.00	0.00	0.00	0.00	98%	**0.00**
Cyclopentanes	0.00	0.00	0.00	0.00	98%	**0.00**
Other Hexanes	0.00	0.00	0.00	0.00	98%	**0.00**
n-Hexane	0.00	0.00	0.00	0.00	98%	**0.00**
Methylcyclopentane	0.00	0.00	0.00	0.00	98%	**0.00**
Benzene	0.00	0.00	0.00	0.00	98%	**0.00**
Cyclohexane	0.00	0.00	0.00	0.00	98%	**0.00**
2,2,4 Trimethylpentane	0.00	0.00	0.00	0.00	98%	**0.00**
Other Heptanes	0.00	0.00	0.00	0.00	98%	**0.00**
Methylcyclohexane	0.00	0.00	0.00	0.00	98%	**0.00**
n-Heptane	0.00	0.00	0.00	0.00	98%	**0.00**
Toluene	0.00	0.00	0.00	0.00	98%	**0.00**
Octanes	0.00	0.00	0.00	0.00	98%	**0.00**
Ethylbenzene	0.00	0.00	0.00	0.00	98%	**0.00**
M&P-Xylene	0.00	0.00	0.00	0.00	98%	**0.00**
Nonanes	0.00	0.00	0.00	0.00	98%	**0.00**
Decanes	0.00	0.00	0.00	0.00	98%	**0.00**
Undecanes Plus	0.00	0.00	0.00	0.00	98%	**0.00**
Total	**12.46**	**199.28**	**249.10**	**460.84**	**--**	**15.31**
Total VOC	**0.54**	**8.69**	**10.86**	**20.10**	**--**	**0.40**
Total HAP	**0.00**	**0.00**	**0.00**	**0.00**	**--**	**0.00**
Heating Value (Btu/scf)	1,049.08	1,049.08	1,049.08	**1,049.08**		
Molecular Weight	18.91	18.91	18.91	**--**		
SO2 Emissions (lb/hr)	0.00	0.00	0.00	**0.00**		
Volumetric Flow (scf/hr)	250.00	4,000.00	5,000.00	**9,250.00**		
Heat Release (MMBtu/hr)	0.26	4.20	5.25	**9.70**		

Criteria Pollutant Emissions from Flare [b]

Component	Emission Rate	Emission Factor	Emission Factor Units
	(lb/hr)		
NO_X	1.34	0.138	lb/MMBtu
CO	2.67	0.2755	lb/MMBtu
SO_2	0.00	--	--
PM_{10}	0.07	7.60	lb/MMscf
$PM_{2.5}$	0.07	7.60	lb/MMscf
H_2S	0.00	--	--

Flare DRE	98.00	%

Footnotes:

[a] Uncontrolled stream properties determined via ProMax.

[b] Flare CO and NOx emission factors from TCEQ Air Permit Techincal Guidance for Chemical Sources. PM and PM2.5 emission factors from AP-42, Table 1.4-1 and 1.4-2, July 1998. SO2 emissions assume 100% conversion of H2S to SO2.

XTO ENERGY INC.
HUSKY CDP
DUAL TIP FLARE PILOT/PURGE GAS ANNUAL EMISSIONS (COMBINED BETWEEN ALL FLARES)

DUAL TIP 20 MMSCFD FLARES - ANNUAL (FL1 - FL3)

Annual Emission Rates and Composition to Flare [a,b]

Component	Pilot Fuel	L.P. Flare Header Purge Gas	H.P. Flare Header Purge Gas	Total	Destruction Efficiency	Exhaust Stream (controlled)
	(ton/yr)	(ton/yr)	(ton/yr)	(ton/yr)	(%)	(ton/yr)
Water	0.00	0.00	0.00	0.00	0%	**0.00**
Hydrogen Sulfide	0.00	0.00	0.00	0.00	98%	**0.00**
Nitrogen	0.74	11.77	14.71	27.22	0%	**27.22**
Carbon Dioxide	0.00	0.00	0.00	0.00	0%	**0.00**
Methane	36.74	587.85	734.81	1359.41	98%	**27.19**
Ethane	14.70	235.17	293.96	543.82	98%	**10.88**
Propane	2.38	38.07	47.59	88.04	98%	**1.76**
Iso-butane	0.00	0.00	0.00	0.00	98%	**0.00**
N-butane	0.00	0.00	0.00	0.00	98%	**0.00**
Iso-pentane	0.00	0.00	0.00	0.00	98%	**0.00**
N-pentane	0.00	0.00	0.00	0.00	98%	**0.00**
Cyclopentanes	0.00	0.00	0.00	0.00	98%	**0.00**
Other Hexanes	0.00	0.00	0.00	0.00	98%	**0.00**
n-Hexane	0.00	0.00	0.00	0.00	98%	**0.00**
Methylcyclopentane	0.00	0.00	0.00	0.00	98%	**0.00**
Benzene	0.00	0.00	0.00	0.00	98%	**0.00**
Cyclohexane	0.00	0.00	0.00	0.00	98%	**0.00**
2,2,4 Trimethylpentane	0.00	0.00	0.00	0.00	98%	**0.00**
Other Heptanes	0.00	0.00	0.00	0.00	98%	**0.00**
Methylcyclohexane	0.00	0.00	0.00	0.00	98%	**0.00**
n-Heptane	0.00	0.00	0.00	0.00	98%	**0.00**
Toluene	0.00	0.00	0.00	0.00	98%	**0.00**
Octanes	0.00	0.00	0.00	0.00	98%	**0.00**
Ethylbenzene	0.00	0.00	0.00	0.00	98%	**0.00**
M&P-Xylene	0.00	0.00	0.00	0.00	98%	**0.00**
Nonanes	0.00	0.00	0.00	0.00	98%	**0.00**
Decanes	0.00	0.00	0.00	0.00	98%	**0.00**
Undecanes Plus	0.00	0.00	0.00	0.00	98%	**0.00**
Total	**54.55**	**872.86**	**1091.07**	**2018.48**	**--**	**67.04**
Total VOC	**2.38**	**38.07**	**47.59**	**88.04**	**--**	**1.76**
Total HAP	**0.00**	**0.00**	**0.00**	**0.00**	**--**	**0.00**
Heating Value (Btu/scf)	1,049.08	1,049.08	1,049.08	**1,049.08**		
Molecular Weight	18.91	18.91	18.91	**--**		
SO2 Emissions (lb/hr)	0.00	0.00	0.00	**0.00**		
Volumetric Flow (scf/year)	2,190,000	35,040,000	43,800,000	**81,030,000**		
Heat Release (MMBtu/hr)	2,297.50	36,759.93	45,949.92	**85,007.35**		

Criteria Pollutant Emissions from Flare [b]

Component	Emission Rate	Emission Factor	Emission Factor Units
	ton/yr		
NO_X	5.87	0.138	lb/MMBtu
CO	11.71	0.5496	lb/MMBtu
SO_2	0.00	--	--
PM_{10}	0.31	7.60	lb/MMscf
$PM_{2.5}$	0.31	7.60	lb/MMscf
H_2S	0.00	--	--

Flare DRE	98.00	%

Footnotes:

[a] Uncontrolled stream properties determined via ProMax.

[b] Flare CO and NOx emission factors from TCEQ Air Permit Techincal Guidance for Chemical Sources. PM and PM2.5 emission factors from AP-42, Table 1.4-1 and 1.4-2, July 1998. SO2 emissions assume 100% conversion of H2S to SO2.

XTO ENERGY INC.

HUSKY CDP

PILOT/PURGE GAS COMBUSTION (FL1-FL3) - GHG EMISSIONS SUMMARY

Flare Emissions Summary Table - Normal Operations

1) $E_{a,CH4} = V_a * X_{CH4} * [(1- \eta)* Z_L + Z_U$ = **0.00** **SCF/Yr**

Va = **81,030,000.00**
X_{CH4} = **0.000**
N = **0.98**
Z_L = **1.00**
Z_U = **0.00**

2) $E_{a,CO2}$ (uncombusted) = $V_a * X_{CO2}$ = **0.00** **SCF/Yr**

Va = **81,030,000.00**
X_{CO2} = **0.000000**

Source	Annual Volume
FL1-FL3 Purge	81030000
	81030000.00

3) $E_{a,CO2}$ (combusted) = Σ (η * Va * Yj * Rj * Z_L)

N = **0.98**
V_a = **81,030,000.00**

			Rj =	**$E_{a,CO2}$ =**
Y_J=	**Methane**	0.0000	1	0.00
	Ethane	0.0000	2	0.00
	Propane	0.0000	3	0.00
	Butane	0.0000	4	0.00
	Pentane +	0.0000	5	0.00
Z_L =	**1.00**			**0.00** **SCF/Yr**

3) $E_{s,n} = \frac{E_{a,n} * (459.67 + T_s) * P_a}{(459.67 + T_a) * P_s}$

$E_{a,n}$(CH4) = 0.00 = **0.00** **SCF/Yr**
$E_{a,n}$(CO2) = 0.00 = **0.00** **SCF/Yr**
Ts = 60° F
Ta = 93.7° F Roswell, AP-42
Ps = 13.28
Pa = 12.73 Roswell, AP-42

4) $Mass_{s,i} = E_{s,i} * \rho_i * 10^3$

$E_{s,i}$(CH4) = 0.00
$E_{s,i}$(CO2) = 0.00
p_i(CH4) = 0.0192 kg/ft3 = 0.00 metric tons
p_i(CO2) = 0.0526 kg/ft3 = 0.00 metric tons

5) $CO_2e = CO_2 + (CH_4 X GWP)$ short tons CO_2e

CO2 = 0.00 = 0.00 0.00
CH4 = 0.00 = 0.00 0.00
CH4 GWP = 25 **0.00**

XTO ENERGY INC.

HUSKY CDP

OVERHEAD GAS COMBUSTION (FL1-FL3OVHD-SSM) - GHG EMISSIONS SUMMARY

Flare Emissions Summary Table - Normal Operations

1) $E_{a,CH4} = V_a * X_{CH4} * [(1- \eta)* Z_L + Z_U$ = **273.00** **SCF/Yr**

Va = **68,250,000.00**
X_{CH4} = **0.0002**
N = **0.98**
Z_L = **1.00**
Z_U = **0.00**

2) $E_{a,CO2}$ (uncombusted) = $V_a * X_{CO2}$ = **34,125.00** **SCF/Yr**

Va = **68,250,000.00**
X_{CO2} = **0.000500**

Source	Annual Volume
FL1-FL3 MSS	68250000
	68250000.00

3) $E_{a,CO2}$ (combusted) = Σ ($\eta * Va * Yj * Rj * Z_L$)

N = **0.98**

			Rj =	**$E_{a, CO2}$ =**	
V_a =	**68,250,000.00**				
Y_J=	**Methane**	0.0002	1	13,377.00	
	Ethane	0.1500	2	20,065,500.00	
	Propane	0.6491	3	130,245,160.50	
	Butane	0.0588	4	15,731,352.00	
	Pentane +	0.0442	5	14,781,585.00	
Z_L =	**1.00**			**180,836,974.50**	**SCF/Yr**

3) $E_{s,n} = \frac{E_{a,n} * (459.67 + T_s) * P_a}{(459.67 + T_a) * P_s}$

$E_{a,n}$(CH4) =	273.00		=	**245.76**	**SCF/Yr**
$E_{a,n}$(CO2) =	180,871,099.50		=	**162,821,421.70**	**SCF/Yr**
Ts =	60° F				
Ta =	93.7° F	Roswell, AP-42			
Ps =	13.28				
Pa =	12.73	Roswell, AP-42			

4) $Mass_{s,i} = E_{s,i} * \rho_i * 10^3$

$E_{s,i}$(CH4) =	245.76				
$E_{s,i}$(CO2) =	162,821,421.70				
p_i(CH4) =	0.0192	kg/ft3	=	0.00	metric tons
p_i(CO2) =	0.0526	kg/ft3	=	8564.41	metric tons

5) $CO_2e = CO_2 + (CH_4 X GWP)$

			short tons	CO_2e
CO2 =	8564.41	=	9440.64	9440.64
CH4 =	0.00	=	0.01	0.13
CH4 GWP =	25			**9440.77**

XTO ENERGY INC.

HUSKY CDP

CRYO GAS COMBUSTION (FL1-FL3CRYO-MSS) - GHG EMISSIONS SUMMARY

Flare Emissions Summary Table - Normal Operations

1) $E_{a,CH4} = V_a * X_{CH4} * [(1- \eta)* Z_L + Z_U$ = **3,037,239.53** **SCF/Yr**

Va = **218,400,000.00**

X_{CH4} = **0.6953**

N = **0.98**

Z_L = **1.00**

Z_U = **0.00**

2) $E_{a,CO2}$ (uncombusted) = $V_a * X_{CO2}$ = **371,354.09** **SCF/Yr**

Va = **218,400,000.00**

X_{CO2} = **0.001700**

Source	Annual Volume
FL1-FL3 MSS	218400000
	218400000.00

3) $E_{a,CO2}$ (combusted) = Σ (η * Va * Yj * Rj * Z_L)

N = **0.98**

			Rj =	**$E_{a, CO2}$ =**	
V_a =	**218,400,000.00**				
Y_J=	**Methane**	0.6953	1	148,824,736.95	
	Ethane	0.1543	2	66,063,454.87	
	Propane	0.0878	3	56,387,278.07	
	Butane	0.0106	4	9,076,767.62	
	Pentane +	0.0099	5	10,596,698.04	
Z_L =	**1.00**			**290,948,935.54**	**SCF/Yr**

3) $E_{s,n} = \frac{E_{a,n} * (459.67 + T_s) * P_a}{(459.67 + T_a) * P_s}$

$E_{a,n}$(CH4) = 3,037,239.53 = **2,734,144.15** **SCF/Yr**

$E_{a,n}$(CO2) = 291,320,289.63 = **262,248,550.80** **SCF/Yr**

Ts = 60° F

Ta = 93.7° F Roswell, AP-42

Ps = 13.28

Pa = 12.73 Roswell, AP-42

4) $Mass_{s,i} = E_{s,i} * \rho_i * 10^3$

$E_{s,i}$(CH4) = 2,734,144.15

$E_{s,i}$(CO2) = 262,248,550.80

p_i(CH4) = 0.0192 kg/ft3 = 52.50 metric tons

p_i(CO2) = 0.0526 kg/ft3 = 13794.27 metric tons

5) $CO_2e = CO_2 + (CH_4 X GWP)$

			short tons	CO_2e
CO2 =	13794.27	=	15205.58	15205.58
CH4 =	52.50	=	57.87	1446.66
CH4 GWP =	25			**16652.24**

XTO ENERGY INC.

HUSKY CDP

STORAGE TANK EMISSIONS SUMMARY - UNCONTROLLED

TOTAL EMISSIONS SUMMARY

						Working & Breathing Losses		Flash Losses		Total Emissions	
FIN	**Unit Description**	**Tank Controlled (Yes/No)**	**Control Type**	**Material Throughput (bbls/day)**	**Material Type**	**Lb/hr**	**TPY**	**Lb/hr**	**TPY**	**Lb/hr**	**TPY**
IFR1	**IFR Condensate Storage Tank**	No	N/A	50000	Condensate	0.29	1.29	---	---	0.29	1.29
IFR2	**IFR Condensate Storage Tank**	No	N/A	50000	Condensate	0.29	1.29	---	---	0.29	1.29
IFR3	**IFR Condensate Storage Tank**	No	N/A	50000	Condensate	0.29	1.29	---	---	0.29	1.29
IFR4	**IFR Condensate Storage Tank**	No	N/A	50000	Condensate	0.29	1.29	---	---	0.29	1.29
OTK1	**Condensate Storage Tank**	Yes	Combustor	4167	Condensate	20.01	87.62	5.09	22.29	25.09	109.91
OTK2	**Condensate Storage Tank**	Yes	Combustor	4167	Condensate	20.01	87.62	5.09	22.29	25.09	109.91
OTK3	**Condensate Storage Tank**	Yes	Combustor	4167	Condensate	20.01	87.62	5.09	22.29	25.09	109.91
OTK4	**Condensate Storage Tank**	Yes	Combustor	4167	Condensate	20.01	87.62	5.09	22.29	25.09	109.91
OTK5	**Condensate Storage Tank**	Yes	Combustor	4167	Condensate	20.01	87.62	5.09	22.29	25.09	109.91
OTK6	**Condensate Storage Tank**	Yes	Combustor	4167	Condensate	20.01	87.62	5.09	22.29	25.09	109.91
PWTK1	**Produced Water Tank**	Yes	Combustor	5014	Produced Water	0.00	0.01	0.00	0.00	0.00	0.01
PWTK2	**Produced Water Tank**	Yes	Combustor	5014	Produced Water	0.00	0.01	0.00	0.00	0.00	0.01
GBS1	**Gun Barrel Separator**	Yes	Combustor	10029	Produced Water	0.69	3.01	229.12	1003.54	229.81	1006.55
OKT7	**Slop Tank**	Yes	Combustor	2081	Condensate	8.10	35.46	15.11	66.18	23.21	101.64
Storage Tank Emissions						129.99	569.38	274.77	1203.47	404.76	1772.85

XTO ENERGY INC.
HUSKY CDP
IFR TANKS EMISSION SUMMARY (PER TANK)

IFR TANK EMISSIONS

100,000 BBL Internal Floating Roof Storage Tank Emissions (Each)[a]		
Component	Uncontrolled	
	W&B Losses	
	(lb/hr)	(ton/yr)
Water	0.00	0.00
Hydrogen Sulfide	0.00	0.00
Nitrogen	0.00	0.00
Carbon Dioxide	0.00	0.00
Methane	0.00	0.00
Ethane	0.06	0.25
Propane	0.10	0.42
Iso-butane	0.06	0.26
N-butane	0.16	0.72
Iso-pentane	0.07	0.31
N-pentane	0.08	0.35
Cyclopentanes	0.00	0.00
Other Hexanes	0.04	0.17
n-Hexane	0.02	0.10
Methylcyclopentane	0.02	0.08
Benzene	0.01	0.06
Cyclohexane	0.03	0.15
2,2,4 Trimethylpentane	0.00	0.00
Other Heptanes	0.01	0.05
Methylcyclohexane	0.03	0.15
n-Heptane	0.02	0.10
Toluene	0.02	0.08
Octanes	0.04	0.17
Ethylbenzene	0.00	0.00
M&P-Xylene	0.01	0.05
Nonanes	0.04	0.16
Decanes	0.04	0.16
Undecanes Plus	0.37	1.62
Total	**1.23**	**5.40**
Total VOC	**1.18**	**5.15**
Total HAP	**0.07**	**0.30**

IFR Tank Information		
Number of Tanks	4	--
Tank Size	100,000	BBL
Control Device	IFR	--
Condensate	200,000	BBL/Day

Footnotes:

[a] Uncontrolled stream properties determined via ProMax.

XTO ENERGY INC.
HUSKY CDP
COMBUSTOR HOURLY EMISSIONS

COMBUSTOR - HOURLY (EPN: ECD1)

Maximum Hourly Emission Rates and Composition to Combustor[a,b]

Component	Pilot Fuel[c]	Slop Oil Tank (OTK7)		Gunbarrel (GBS1)		PW Tanks (53-54)		Oil Tanks (32-37)		Truck Loading (OTL)	Total	Destruction Efficiency	Flare Exhaust (controlled)
		W&B Losses	Flashing Losses	W&B Losses	Flashing Losses	W&B Losses	Flashing Losses	W&B Losses	Flashing Losses				
	(lb/hr)	(lb/hr)	(lb/hr)	(lb/hr)	(lb/hr)	(lb/hr)	(lb/hr)	(lb/hr)	(lb/hr)	(lb/hr)	(lb/hr)	(%)	(lb/hr)
Water	0.00	0.00	0.30	0.62	5.23	0.79	0.00	0.00	0.02	0.00	6.95	0%	**6.95**
Hydrogen Sulfide	0.00	0.00	0.00	0.00	0.00	0.00	0.00	0.00	0.00	0.00	0.00	99%	**0.00**
Nitrogen	0.17	0.00	0.00	0.00	0.00	0.00	0.00	0.00	0.00	0.00	0.17	0%	**0.17**
Carbon Dioxide	0.00	0.00	0.00	0.00	0.00	0.00	0.00	0.02	0.01	0.00	0.04	0%	**0.04**
Methane	8.39	0.00	0.01	0.00	0.00	0.00	0.00	0.05	0.18	0.00	8.63	99%	**0.09**
Ethane	3.36	1.03	1.75	0.15	29.51	0.01	0.00	14.53	4.00	6.83	61.15	99%	**0.61**
Propane	0.54	3.27	5.96	0.31	89.93	0.00	0.00	52.76	13.65	21.69	188.12	99%	**1.88**
Iso-butane	0.00	0.78	1.46	0.06	21.98	0.00	0.00	12.03	3.05	5.18	44.55	98%	**0.89**
N-butane	0.00	1.90	3.51	0.15	53.18	0.00	0.00	29.73	7.36	12.61	108.43	98%	**2.17**
Iso-pentane	0.00	0.58	1.07	0.04	16.43	0.00	0.00	7.45	1.80	3.86	31.23	98%	**0.62**
N-pentane	0.00	0.59	1.10	0.04	16.86	0.00	0.00	7.40	1.80	3.91	31.70	98%	**0.63**
Cyclopentanes	0.00	0.00	0.00	0.00	0.00	0.00	0.00	0.00	0.00	0.00	0.00	98%	**0.00**
Other Hexanes	0.00	0.23	0.42	0.02	6.48	0.00	0.00	2.59	0.62	1.50	11.86	98%	**0.24**
n-Hexane	0.00	0.14	0.25	0.01	3.83	0.00	0.00	1.47	0.34	0.90	6.94	98%	**0.14**
Methylcyclopentane	0.00	0.10	0.19	0.01	2.86	0.00	0.00	1.05	0.26	0.64	5.09	98%	**0.10**
Benzene	0.00	0.06	0.16	0.00	2.40	0.00	0.00	0.63	0.21	0.41	3.87	98%	**0.08**
Cyclohexane	0.00	0.16	0.31	0.01	4.72	0.00	0.00	1.72	0.43	1.04	8.39	98%	**0.17**
2,2,4 Trimethylpentane	0.00	0.00	0.00	0.00	0.00	0.00	0.00	0.00	0.00	0.00	0.00	98%	**0.00**
Other Heptanes	0.00	0.01	0.09	0.00	1.31	0.00	0.00	0.34	0.29	0.09	2.12	98%	**0.04**
Methylcyclohexane	0.00	0.11	0.20	0.01	3.16	0.00	0.00	1.18	0.29	0.71	5.64	98%	**0.11**
n-Heptane	0.00	0.07	0.14	0.00	2.11	0.00	0.00	0.39	0.10	0.45	3.26	98%	**0.07**
Toluene	0.00	0.04	0.10	0.00	1.47	0.00	0.00	0.41	0.12	0.26	2.40	98%	**0.05**
Octanes	0.00	0.05	0.10	0.00	1.48	0.00	0.00	0.54	0.13	0.32	2.63	98%	**0.05**
Ethylbenzene	0.00	0.00	0.00	0.00	0.00	0.00	0.00	0.01	0.00	0.00	0.01	98%	**0.00**
M&P-Xylene	0.00	0.01	0.02	0.00	0.28	0.00	0.00	0.12	0.03	0.07	0.54	98%	**0.01**
Nonanes	0.00	0.01	0.03	0.00	0.46	0.00	0.00	0.17	0.04	0.10	0.82	98%	**0.02**
Decanes	0.00	0.01	0.01	0.00	0.17	0.00	0.00	0.06	0.01	0.03	0.30	98%	**0.01**
Undecanes Plus	0.00	0.00	0.00	0.00	0.00	0.00	0.00	0.00	0.00	0.00	0.00	98%	**0.00**
Total	**12.46**	**9.13**	**17.16**	**1.45**	**263.86**	**0.80**	**0.00**	**134.64**	**34.74**	**60.60**	**534.83**	**--**	**15.13**
Total VOC	**0.54**	**8.10**	**15.11**	**0.69**	**229.12**	**0.00**	**0.00**	**120.03**	**30.54**	**53.76**	**457.89**	**--**	**7.28**
Total HAP	**0.00**	**0.25**	**0.52**	**0.02**	**7.99**	**0.00**	**0.00**	**2.64**	**0.70**	**1.64**	**13.75**	**--**	**0.28**
Heating Value (Btu/scf)	1,049.08	2,834.41	2,728.57	944.11	2,697.25	66.08	66.08	2,789.14	2,742.44	2,834.41	**2,630.00**		
Molecular Weight	18.91	50.25	49.26	27.95	48.78	18.15	18.15	49.37	48.54	0.00	**--**		
SO2 Emissions (lb/hr)	0.00	0.00	0.00	0.00	0.00	0.00	0.00	0.00	0.00	0.00	**0.00**		
Volumetric Flow (scf/hr)	250.00	68.91	132.22	19.69	2,052.52	16.74	0.00	1,034.97	271.61	542.89	**4,389.55**		
Heat Release (MMBtu/hr)	0.26	0.20	0.36	0.02	5.54	0.00	0.00	2.89	0.74	1.54	**11.54**		

Criteria Pollutant Emissions from ECD [b]

Component	Emission Rate	Emission Factor	Emission Factor Units
	(lb/hr)		
NO_X	1.59	0.138	lb/MMBtu
CO	3.18	0.2755	lb/MMBtu
SO_2	0.00	--	--
PM_{10}	8.60E-02	7.60	lb/MMscf
$PM_{2.5}$	8.60E-02	7.60	lb/MMscf
H_2S	0.00	--	--

Combustor DRE	99.00	%

*** 98% was used for iso-butane and heavier compounds.**

Footnotes:

[a] Uncontrolled stream properties determined via ProMax.

[b] Flare CO and NOx emission factors from TCEQ Air Permit Techincal Guidance for Chemical Sources. PM and PM2.5 emission factors from AP-42, Table 1.4-1 and 1.4-2, July 1998. SO2 emissions assume 100% conversion of H2S to SO2.

XTO ENERGY INC.
HUSKY CDP
COMBUSTOR ANNUAL EMISSIONS

COMBUSTOR - ANNUAL (EPN: ECD1)

Annual Emission Rates and Composition to Combustor[a,b]

Component	Pilot Fuel[c]	Slop Oil Tank (OTK7)		Gunbarrel (GBS1)		PW Tanks (53-54)		Oil Tanks (32-37)		Truck Loading (OTL)	Total	Destruction Efficiency	Exhaust Stream (controlled)
		W&B Losses	Flashing Losses	W&B Losses	Flashing Losses	W&B Losses	Flashing Losses	W&B Losses	Flashing Losses				
	(ton/yr)	(ton/yr)	(ton/yr)	(ton/yr)	(ton/yr)	(ton/yr)	(ton/yr)	(ton/yr)	(ton/yr)	(ton/yr)	(ton/yr)	(%)	(ton/yr)
Water	0.00	0.00	1.32	2.70	22.90	3.45	0.00	0.00	0.07	0.00	30.44	0%	**30.44**
Hydrogen Sulfide	0.00	0.00	0.00	0.00	0.00	0.00	0.00	0.00	0.00	0.00	0.00	99%	**0.00**
Nitrogen	0.74	0.00	0.00	0.00	0.00	0.00	0.00	0.00	0.00	0.00	0.74	0%	**0.74**
Carbon Dioxide	0.00	0.00	0.00	0.00	0.00	0.00	0.00	0.11	0.06	0.00	0.17	0%	**0.17**
Methane	36.74	0.00	0.03	0.00	0.00	0.00	0.00	0.23	0.77	0.00	37.77	99%	**0.38**
Ethane	14.70	4.50	7.65	0.65	129.24	0.03	0.00	63.66	17.51	1.25	239.19	99%	**2.39**
Propane	2.38	14.31	26.12	1.35	393.89	0.02	0.00	231.11	59.79	3.96	732.93	99%	**7.33**
Iso-butane	0.00	3.42	6.42	0.28	96.27	0.00	0.00	52.68	13.37	0.95	173.38	98%	**3.47**
N-butane	0.00	8.32	15.36	0.68	232.94	0.00	0.00	130.20	32.22	2.30	422.02	98%	**8.44**
Iso-pentane	0.00	2.54	4.70	0.20	71.95	0.00	0.00	32.62	7.87	0.70	120.58	98%	**2.41**
N-pentane	0.00	2.58	4.82	0.20	73.85	0.00	0.00	32.40	7.88	0.71	122.43	98%	**2.45**
Cyclopentanes	0.00	0.00	0.00	0.00	0.00	0.00	0.00	0.00	0.00	0.00	0.00	98%	**0.00**
Other Hexanes	0.00	0.99	1.85	0.07	28.40	0.00	0.00	11.33	2.73	0.27	45.65	98%	**0.91**
n-Hexane	0.00	0.60	1.09	0.04	16.78	0.00	0.00	6.42	1.49	0.16	26.58	98%	**0.53**
Methylcyclopentane	0.00	0.42	0.82	0.03	12.51	0.00	0.00	4.59	1.13	0.12	19.62	98%	**0.39**
Benzene	0.00	0.27	0.69	0.02	10.51	0.00	0.00	2.77	0.92	0.07	15.25	98%	**0.30**
Cyclohexane	0.00	0.68	1.35	0.05	20.68	0.00	0.00	7.54	1.90	0.19	32.38	98%	**0.65**
2,2,4 Trimethylpentane	0.00	0.00	0.00	0.00	0.00	0.00	0.00	0.00	0.00	0.00	0.00	98%	**0.00**
Other Heptanes	0.00	0.06	0.37	0.00	5.73	0.00	0.00	1.48	1.27	0.02	8.93	98%	**0.18**
Methylcyclohexane	0.00	0.47	0.90	0.03	13.83	0.00	0.00	5.15	1.26	0.13	21.76	98%	**0.44**
n-Heptane	0.00	0.30	0.60	0.02	9.25	0.00	0.00	1.71	0.43	0.08	12.40	98%	**0.25**
Toluene	0.00	0.17	0.42	0.01	6.44	0.00	0.00	1.77	0.54	0.05	9.41	98%	**0.19**
Octanes	0.00	0.21	0.42	0.01	6.49	0.00	0.00	2.37	0.58	0.06	10.14	98%	**0.20**
Ethylbenzene	0.00	0.00	0.00	0.00	0.00	0.00	0.00	0.04	0.01	0.00	0.06	98%	**0.00**
M&P-Xylene	0.00	0.05	0.08	0.00	1.25	0.00	0.00	0.54	0.11	0.01	2.04	98%	**0.04**
Nonanes	0.00	0.07	0.13	0.00	2.03	0.00	0.00	0.75	0.18	0.02	3.18	98%	**0.06**
Decanes	0.00	0.02	0.05	0.00	0.76	0.00	0.00	0.25	0.06	0.01	1.15	98%	**0.02**
Undecanes Plus	0.00	0.00	0.00	0.00	0.00	0.00	0.00	0.00	0.00	0.00	0.00	98%	**0.00**
Total	**54.55**	**39.97**	**75.17**	**6.35**	**1155.69**	**3.51**	**0.00**	**589.73**	**152.16**	**11.06**	**2088.20**	**--**	**62.38**
Total VOC	**2.38**	**35.46**	**66.18**	**3.01**	**1003.54**	**0.02**	**0.00**	**525.74**	**133.75**	**9.81**	**1779.89**	**--**	**28.27**
Total HAP	**0.00**	**1.08**	**2.28**	**0.08**	**34.98**	**0.00**	**0.00**	**11.55**	**3.08**	**0.30**	**53.34**	**--**	**1.07**
Heating Value (Btu/scf)	1,049.08	2,834.41	2,728.57	944.11	2,697.25	66.08	66.08	2,789.14	2,742.44	2,834.41	**2602.52**		
Molecular Weight	18.91	50.25	49.26	27.95	48.78	18.15	18.15	49.37	48.54	0.00	**--**		
SO2 Emissions (tpy)	0.00	0.00	0.00	0.00	0.00	0.00	0.00	0.00	0.00	0.00	**0.00**		
Volumetric Flow (scf/yr)	2,190,000.0	603,649.1	1,158,265.7	172,489.1	17,980,055.1	146,659.2	0.0	9,066,326.8	2,379,319.4	198,155.7	**33,894,920.07**		
Heat Release (MMBtu/yr)	2,297.50	1,710.99	3,160.41	162.85	48,496.62	9.69	0.00	25,287.23	6,525.15	561.65	**88,212.09**		

Criteria Pollutant Emissions from ECD[b]

Component	Emission Rate	Emission Factor	Emission Factor Units
	(ton/yr)		
NO_X	6.09	0.138	lb/MMBtu
CO	12.15	0.2755	lb/MMBtu
SO_2	0.00	--	--
PM_{10}	0.13	7.60	lb/MMscf
$PM_{2.5}$	0.13	7.60	lb/MMscf
H_2S	0.00	--	--

Combustor DRE	99.00	%

Footnotes:

[a] Uncontrolled stream properties determined via ProMax.

[b] Flare CO and NOx emission factors from TCEQ Air Permit Techincal Guidance for Chemical Sources. PM and PM2.5 emission factors from AP-42, Table 1.4-1 and 1.4-2, July 1998. SO2 emissions assume 100% conversion of H2S to SO2.

XTO ENERGY INC.

HUSKY CDP

COMBUSTOR (ECD1) GHG EMISSIONS SUMMARY

Flare Emissions Summary Table - Normal Operations

1) $E_{a,CH4} = V_a * X_{CH4} * [(1- \eta)* Z_L + Z_U$ = **51.67** **SCF/Yr**

Va = **33,894,920.07**
X_{CH4} = **0.0002**
N = **0.99**
Z_L = **1.00**
Z_U = **0.00**

2) $E_{a,CO2}$ (uncombusted) = $V_a * X_{CO2}$ = **704.20** **SCF/Yr**

Va = **33,894,920.07**
X_{CO2} = **0.000021**

Source	Annual Volume
ECD1	33894920
	33894920.07

3) $E_{a,CO2}$ (combusted) = Σ ($\eta * Va * Yj * Rj * Z_L$)

N = **0.99**
V_a = **33,894,920.07**

			Rj =	**$E_{a,\ CO2}$ =**	
Y_J=	**Methane**	0.0002	1	5,115.80	
	Ethane	0.1883	2	12,638,261.42	
	Propane	0.4079	3	41,066,562.39	
	Butane	0.0739	4	9,918,211.20	
	Pentane +	0.1054	5	17,687,616.62	
Z_L =	**1.00**			**81,315,767.43**	**SCF/Yr**

3) $E_{s,n} = \frac{E_{a,n} * (459.67 + T_s) * P_a}{(459.67 + T_a) * P_s}$

$E_{a,n}$(CH4) = 51.67 = **46.52** **SCF/Yr**
$E_{a,n}$(CO2) = 81,316,471.62 = **73,201,653.30** **SCF/Yr**
Ts = 60° F
Ta = 93.7° F Roswell, AP-42
Ps = 13.28
Pa = 12.73 Roswell, AP-42

4) $Mass_{s,i} = E_{s,i} * \rho_i * 10^3$

$E_{s,i}$ (CH4) = 46.52
$E_{s,i}$ (CO2) = 73,201,653.30

p_i (CH4) =	0.0192	kg/ft3	=	0.00	metric tons
p_i (CO2) =	0.0526	kg/ft3	=	3850.41	metric tons

5) $CO_2e = CO_2 + (CH_4 X GWP)$

			short tons	CO_2e
CO2 =	3850.41	=	4244.35	4244.35
CH4 =	0.00	=	0.00	0.02
CH4 GWP =	25			**4244.37**

XTO ENERGY INC.
HUSKY CDP
THERMAL OXIDIZER HOURLY EMISSIONS (PER UNIT)

THERMAL OXIDIZERS - HOURLY (EPNS: TO1-TO3)

Maximum Hourly Emission Rates and Composition to Thermal Oxidizer[a,b]

Component	TO Assist Fuel	Amine Flash Gas	Amine Reboiler Still Vent	Total	Destruction Efficiency	Exhaust Stream (controlled)
	(lb/hr)	(lb/hr)	(lb/hr)	(lb/hr)	(%)	(lb/hr)
Hydrogen Sulfide	0.00	0.00	0.46	0.46	99%	**0.00**
N2	0.38	2.68	0.09	3.16	0%	**3.16**
Carbon Dioxide	0.01	37.14	24842.77	24879.91	0%	**24879.91**
Methane	951.31	157.53	17.56	1126.41	99%	**11.26**
Ethane	36.58	62.43	11.00	110.01	99%	**1.10**
Propane	12.87	28.51	4.11	45.50	99%	**0.45**
i-Butane	0.00	2.78	0.30	3.08	99%	**0.03**
n-Butane	0.00	8.48	1.38	9.86	99%	**0.10**
i-Pentane	0.00	0.97	0.08	1.06	99%	**0.01**
n-Pentane	0.00	1.21	0.13	1.35	99%	**0.01**
n-Hexane	0.00	1.49	0.13	1.61	99%	**0.02**
Benzene	0.00	1.49	0.13	1.61	99%	**0.02**
Toluene	0.00	1.49	0.13	1.61	99%	**0.02**
Ethylbenzene	0.00	1.49	0.13	1.61	99%	**0.02**
Xylene	0.00	1.49	0.13	1.61	99%	**0.02**
Water	0.00	6.59	721.49	728.07	99%	**7.28**
MDEA	0.00	0.00	0.00	0.00	99%	**0.00**
Piperazine	0.00	0.00	0.00	0.00	99%	**0.00**
O2	0.00	0.00	0.00	0.00	99%	**0.00**
Total	**1001.16**	**315.76**	**25600.02**	**26916.94**	**--**	**24903.41**
Total VOC	**12.87**	**43.44**	**6.14**	**62.46**	**--**	**0.62**
Total HAP	**0.00**	**7.45**	**0.63**	**8.07**	**--**	**0.08**
Heating Value (Btu/scf)	1,032.19	1,140.78	6.81	**121.84**		
Molecular Weight	16.46	21.99	26.00	**--**		
SO2 Emissions (lb/hr)	0.00	0.00	0.86	**0.86**		
Volumetric Flow (scf/hr)	23,080.99	5,346.44	230,020.25	**258,447.69**		
Heat Release (MMBtu/hr)	23.82	6.10	1.57	**31.49**		

Criteria Pollutant Emissions from TO [b]

Component	Emission Rate	Emission Factor	Emission Factor Units
	(lb/hr)		
NO_X	2.52	0.08	lb/MMBtu
CO	2.09	--	--
SO_2	0.86	--	--
PM_{10}	0.23	7.60	lb/MMscf
$PM_{2.5}$	0.23	7.60	lb/MMscf
H_2S	0.38	--	--

Thermal Oxidizer DRE	99.00	%

Total lb-Mol/hr 1491.44 Zeeco Specifications

PV=nRT

T =	1600	F
n =	1,491	lbmol/hr
P =	13.2	psia
R =	10.73	
V	2,497,461	ft3/hr
	693.7	ft3/sec

Velocity = Flow Rate/Area

Flow rate =	694	ft3/sec
Inside Diameter =	4.1	feet
Area =	13.4	ft2
Velocity =	51.9	ft/sec

Calculation Factors:

NO2 MW	46.0100 lb/lb-mole
CO MW	28.0000 lb/lb-mole

Manufacturer's Guaranteed Outlet Concentration

Pollutant	(ppmv)
NOx	30
CO	50

Notes:

[a] Uncontrolled stream properties determined via ProMax.

[b] TO CO and NOx exhuast emissions gaurantee provided by ZEECO. PM and PM2.5 emission factors from AP-42, Table 1.4-1 and 1.4-2, July 1998. SO2 emissions assume 100% conversion of H2S to SO2.

XTO ENERGY INC.
HUSKY CDP
THERMAL OXIDIZER ANNUAL EMISSIONS (PER UNIT)

THERMAL OXIDIZER - ANNUAL (EPNS: TO1-TO3)

Annual Emission Rates and Composition to Thermal Oxidizer[a,b]

Component	TO Assist Fuel	Amine Flash Gas	Amine Reboiler Still Vent	Total	Destruction Efficiency	Exhaust Stream (controlled)
	(ton/yr)	(ton/yr)	(ton/yr)	(ton/yr)	(%)	(ton/yr)
Hydrogen Sulfide	0.00	0.00	2.00	2.01	99%	**0.02**
N2	1.68	11.74	0.42	13.84	0%	**13.84**
Carbon Dioxide	0.02	162.66	108811.32	108974.01	0%	**108974.01**
Methane	4166.76	689.98	76.93	4933.67	99%	**49.34**
Ethane	160.21	273.45	48.20	481.85	99%	**4.82**
Propane	56.39	124.89	18.01	199.28	99%	**1.99**
i-Butane	0.00	12.16	1.33	13.49	99%	**0.13**
n-Butane	0.00	37.13	6.05	43.18	99%	**0.43**
i-Pentane	0.00	4.25	0.37	4.62	99%	**0.05**
n-Pentane	0.00	5.31	0.58	5.90	99%	**0.06**
n-Hexane	0.00	6.52	0.55	7.07	99%	**0.07**
Benzene	0.00	6.52	0.55	7.07	99%	**0.07**
Toluene	0.00	6.52	0.55	7.07	99%	**0.07**
Ethylbenzene	0.00	6.52	0.55	7.07	99%	**0.07**
Xylene	0.00	6.52	0.55	7.07	99%	**0.07**
Water	0.00	28.85	3160.12	3188.96	99%	**31.89**
MDEA	0.00	0.01	0.00	0.01	99%	**0.00**
Piperazine	0.00	0.00	0.00	0.00	99%	**0.00**
O2	0.00	0.00	0.00	0.00	99%	**0.00**
Total	**4385.06**	**1383.05**	**112128.10**	**117896.21**	**--**	**109076.93**
Total VOC	**56.39**	**190.27**	**26.90**	**273.55**	**--**	**2.74**
Total HAP	**0.00**	**32.61**	**2.75**	**35.36**	**--**	**0.35**
Heating Value (Btu/scf)	1,050.86	1,140.78	6.81	**123.50**		
Molecular Weight	16.81	21.99	26.00	**--**		
SO2 Emissions (tpy)	0.00	0.01	3.77	**3.78**		
Volumetric Flow (scf/yr)	202,189,493.2	46,834,851.1	2,014,977,388.5	**2,264,001,732.81**		
Heat Release (MMBtu/yr)	212,472.85	53,428.33	13,713.22	**279,614.40**		

Criteria Pollutant Emissions from TO [b]

Component	Emission Rate	Emission Factor	Emission Factor Units
	(ton/yr)		
NO_X	11.03	0.08	lb/MMBtu
CO	9.15	--	--
SO_2	3.78	--	--
PM_{10}	1.03	7.60	lb/MMscf
$PM_{2.5}$	1.03	7.60	lb/MMscf
H_2S	0.02	--	--

Thermal Oxidizer DRE	99.00	%

Calculation Factors:

NO2 MW	46.0100 lb/lb-mole
CO MW	28.0000 lb/lb-mole

Manufacturers Guaranteed Outlet Concentration

Pollutant	(ppmv)
NOx	30
CO	50

Footnotes:

[a] Uncontrolled stream properties determined via ProMax.

[b] TO CO and NOx exhuast emissions gaurantee provided by ZEECO. PM and PM2.5 emission factors from AP-42, Table 1.4-1 and 1.4-2, July 1998. SO2 emissions assume 100% conversion of H2S to SO2.

XTO ENERGY INC.

HUSKY CDP

THERMAL OXIDIZERS (TO1-TO6) GHG EMISSIONS SUMMARY (PER UNIT)

Emissions Summary Table - Flash Gas Stream

1) $E_{a,CH4} = V_a * X_{CH4} * [(1- \eta)* Z_L + Z_U$ = **326,429.31** **SCF/Yr**

Va = **46,834,851.05**

X_{CH4} = **0.697**

N = **0.99**

Z_L = **1.00**

Z_U = **0.00**

2) $E_{a,CO2}$ (uncombusted) = $V_a * X_{CO2}$ = **2,805,227.72** **SCF/Yr**

Va = **46,834,851.1**

X_{CO2} = **0.059896**

3) $E_{a,CO2}$ (combusted) = $\Sigma (\eta * Va * Yj * Rj * Z_L)$

N = **0.99**

			Rj =	**$E_{a, CO2}$ =**	
V_a =	**46,834,851.1**				
Y_J=	**Methane**	0.6970	1	32,316,501.87	
	Ethane	0.1474	2	13,665,925.22	
	Propane	0.0459	3	6,384,237.17	
	Butane	0.0137	4	2,548,768.07	
	Pentane +	0.0034	5	782,573.85	
Z_L =	**1.00**			**55,698,006.18**	**SCF/Yr**

3) $E_{s,n} = \frac{E_{a,n} * (459.67 + T_s) * P_a}{(459.67 + T_a) * P_s}$

$E_{a,n}$(CH4) = 326,429.31 = **293,853.94** **SCF/Yr**

$E_{a,n}$(CO2) = 58,503,233.90 = **52,665,018.04** **SCF/Yr**

Ts = 60º F

Ta = 93.7º F Roswell, AP-42

Ps = 13.28

Pa = 12.73 Roswell, AP-42

4) $Mass_{s,i} = E_{s,i} * \rho_i * 10^3$

$E_{s,i}$ (CH4) = 293,853.94

$E_{s,i}$ (CO2) = 52,665,018.04

p_i (CH4) =	0.0192	kg/ft3	=	5.64	metric tons
p_i (CO2) =	0.0526	kg/ft3	=	2770.18	metric tons

5) $CO_2e = CO_2 + (CH_4 X GWP)$

			short tons	CO_2e
CO2 =	2770.18	=	3053.60	3053.60
CH4 =	5.64	=	6.22	155.48
CH4 GWP =	25			**3209.08**

Source	Annual Volume
TO Amine Flash	46834851
	46834851.05

XTO ENERGY INC.

HUSKY CDP

THERMAL OXIDIZERS (TO1-TO6) GHG EMISSIONS SUMMARY (PER UNIT)

Emissions Summary Table - Still Vent Stream

1) $E_{a,CH4} = V_a * X_{CH4} * [(1- \eta)* Z_L + Z_U$ = **36,397.61** **SCF/Yr**

Va = **2,014,977,388.54**

X_{CH4} = **0.002**

N = **0.99**

Z_L = **1.00**

Z_U = **0.00**

2) $E_{a,CO2}$ (uncombusted) = $V_a * X_{CO2}$ = **1,876,510,810.08** **SCF/Yr**

Va = **2,014,977,388.5**

X_{CO2} = **0.931281**

3) $E_{a,CO2}$ (combusted) = $\Sigma (\eta * Va * Yj * Rj * Z_L)$

N = **0.99**

			Rj =	**$E_{a,CO2}$ =**
V_a =	**2,014,977,388.5**			
Y_j=	**Methane**	0.0018	1	3,603,363.11
	Ethane	0.0006	2	2,408,965.89
	Propane	0.0002	3	920,603.66
	Butane	0.0000	4	381,925.64
	Pentane +	0.0000	5	73,642.44
Z_L =	**1.00**			**7,388,500.73** **SCF/Yr**

3) $E_{s,n} = \frac{E_{a,n} * (459.67 + T_s) * P_a}{(459.67 + T_a) * P_s}$

$E_{a,n}$(CH4) = 36,397.61 = **32,765.38** **SCF/Yr**

$E_{a,n}$(CO2) = 1,883,899,310.81 = **1,695,899,261.78** **SCF/Yr**

Ts = 60° F

Ta = 93.7° F Roswell, AP-42

Ps = 13.28

Pa = 12.73 Roswell, AP-42

4) $Mass_{s,i} = E_{s,i} * \rho_i * 10^3$

$E_{s,i}$ (CH4) = 32,765.38

$E_{s,i}$ (CO2) = 1,695,899,261.78

p_i (CH4) =	0.0192	kg/ft3	=	0.63	metric tons
p_i (CO2) =	0.0526	kg/ft3	=	89204.30	metric tons

5) $CO_2e = CO_2 + (CH_4 X GWP)$

			short tons	CO_2e
CO2 =	89204.30	=	98330.88	98330.88
CH4 =	0.63	=	0.69	17.34
CH4 GWP =	25			**98348.22**

Source	Annual Volume
TO	2014977389
Amine Still Vent	
	2014977388.54

XTO ENERGY INC.
HUSKY CDP
FUGITIVE EMISSIONS - VOCs

Uncontrolled VOC Emissions

Component Type	Service	Estimated Components Count	Hours	Factors	Total VOC Weight %	VOC Emissions		
						lb/hour	lb/year	tons/year
Valves	Gas/Vapor	12140	8760	0.009920	29.22%	35.19	308285.17	154.14
	Light Oil	5500	8760	0.005500	99.96%	30.24	264881.05	132.44
	Heavy Oil	159	8760	0.000019	99.96%	0.00	26.45	0.01
	Water/Light Oil	0	8760	0.000216	99.96%	0.00	0.00	0.00
Pump Seals	Gas/Vapor	0	8760	0.005290	29.22%	0.00	0.00	0.00
	Light Oil	300	8760	0.028660	99.96%	8.59	75287.51	37.64
	Heavy Oil	4	8760	0.001130	99.96%	0.00	39.58	0.02
	Water/Light Oil	40	8760	0.000053	99.96%	0.00	18.56	0.01
Connectors	Gas/Vapor	18000	8760	0.000440	29.22%	2.31	20274.37	10.14
	Light Oil	15000	8760	0.000463	99.96%	6.94	60813.19	30.41
	Heavy Oil	0	8760	0.000017	99.96%	0.00	0.00	0.00
	Water/Light Oil	1400	8760	0.000243	99.96%	0.34	2978.93	1.49
Flanges	Gas/Vapor	8354	8760	0.000860	29.22%	2.10	18391.42	9.20
	Light Oil	11000	8760	0.000243	99.96%	2.67	23405.85	11.70
	Heavy Oil	367	8760	0.000001	99.96%	0.00	2.76	0.00
	Water/Light Oil	1500	8760	0.000006	99.96%	0.01	81.43	0.04
Open-ended Lines	Gas/Vapor	0	8760	0.004410	29.22%	0.00	0.00	0.00
	Light Oil	0	8760	0.003090	99.96%	0.00	0.00	0.00
	Heavy Oil	0	8760	0.000309	99.96%	0.00	0.00	0.00
	Water/Light Oil	0	8760	0.000550	99.96%	0.00	0.00	0.00
Other:	Gas/Vapor	40	8760	0.019400	29.22%	0.23	1986.48	0.99
	Light Oil	0	8760	0.016500	99.96%	0.00	0.00	0.00
	Heavy Oil	0	8760	0.000068	99.96%	0.00	0.00	0.00
	Water/Light Oil	0	8760	0.030900	99.96%	0.00	0.00	0.00

Emission Component	lb/hr	lb/year	TPY
Uncontrolled VOC Emissions	88.64	776472.76	388.24

Controlled VOC Emissions

Component Type	Service	Estimated Components Count	Hours	Factors	Total VOC Weight %	VOC Emissions		
						lb/hour	lb/year	tons/year
Valves	Gas/Vapor	12140	8760	0.009920	29.22%	11.61	101734.11	50.87
	Light Oil	3800	8760	0.005500	99.96%	8.15	71373.40	35.69
	Heavy Oil	0	8760	0.000019	99.96%	0.00	0.00	0.00
	Water/Light Oil	0	8760	0.000216	99.96%	0.00	0.00	0.00
Pump Seals	Gas/Vapor	0	8760	0.005290	29.22%	0.00	0.00	0.00
	Light Oil	40	8760	0.028660	99.96%	0.63	5521.08	2.76
	Heavy Oil	0	8760	0.001130	99.96%	0.00	0.00	0.00
	Water/Light Oil	0	8760	0.000053	99.96%	0.00	0.00	0.00
Connectors	Gas/Vapor	18000	8760	0.000440	29.22%	2.31	20274.37	10.14
	Light Oil	15000	8760	0.000463	99.96%	6.94	60813.19	30.41
	Heavy Oil	0	8760	0.000017	99.96%	0.00	0.00	0.00
	Water/Light Oil	0	8760	0.000243	99.96%	0.00	0.00	0.00
Flanges	Gas/Vapor	1500	8760	0.000860	29.22%	0.38	3302.27	1.65
	Light Oil	1500	8760	0.000243	99.96%	0.36	3191.71	1.60
	Heavy Oil	0	8760	0.000001	99.96%	0.00	0.00	0.00
	Water/Light Oil	0	8760	0.000006	99.96%	0.00	0.00	0.00
Open-ended Lines	Gas/Vapor	0	8760	0.004410	29.22%	0.00	0.00	0.00
	Light Oil	0	8760	0.003090	99.96%	0.00	0.00	0.00
	Heavy Oil	0	8760	0.000309	99.96%	0.00	0.00	0.00
	Water/Light Oil	0	8760	0.000550	99.96%	0.00	0.00	0.00
Other:	Gas/Vapor	40	8760	0.019400	29.22%	0.23	1986.48	0.99
	Light Oil	0	8760	0.016500	99.96%	0.00	0.00	0.00
	Heavy Oil	0	8760	0.000068	99.96%	0.00	0.00	0.00
	Water/Light Oil	0	8760	0.030900	99.96%	0.00	0.00	0.00

Emission Component	lb/hr	lb/year	TPY
Controlled VOC Emissions	30.62	268196.60	134.10

Notes:

[1] **Control efficiencies based on Table 5.2 of EPA-453/R-095-017**

Valves **Gas Vapor** **67%** **Pump** **45%** **Flanges/Connectors** **0%**

Light Liquid **61%**

Calculations: Page 48

XTO ENERGY INC.
HUSKY CDP
FUGITIVE GREENHOUSE GAS EMISSIONS

Uncontrolled Emissions

Component Type	Service	Estimated Components Count	Hours	Factors	Total CH4 Weight %	Total CO2 Weight %	CH4 Emissions[1]	CO2 Emissions[2]
							tons/year	tons/year
Valves	Gas/Vapor	12140	8760	0.00992070	49.06%	0.33%	268.74	1.80
	Light Oil	5500	8760	0.00550000	0.00%	0.00%	0.00	0.00
	Heavy Oil	159	8760	0.00001900	0.00%	0.00%	0.00	0.00
	Water/Light Oil	0	8760	0.00021600	0.00%	0.00%	0.00	0.00
Pump Seals	Gas/Vapor	0	8760	0.00529000	49.06%	0.33%	0.00	0.00
	Light Oil	300	8760	0.02866000	0.00%	0.00%	0.00	0.00
	Heavy Oil	4	8760	0.00113000	0.00%	0.00%	0.00	0.00
	Water/Light Oil	40	8760	0.00005300	0.00%	0.00%	0.00	0.00
Connectors	Gas/Vapor	18000	8760	0.00044000	49.06%	0.33%	17.67	0.12
	Light Oil	15000	8760	0.00046300	0.00%	0.00%	0.00	0.00
	Heavy Oil	0	8760	0.00001700	0.00%	0.00%	0.00	0.00
	Water/Light Oil	1400	8760	0.00024300	0.00%	0.00%	0.00	0.00
Flanges	Gas/Vapor	8354	8760	0.00086000	49.06%	0.33%	16.03	0.11
	Light Oil	11000	8760	0.00024300	0.00%	0.00%	0.00	0.00
	Heavy Oil	367	8760	0.00000086	0.00%	0.00%	0.00	0.00
	Water/Light Oil	1500	8760	0.00000620	0.00%	0.00%	0.00	0.00
Open-ended Lines	Gas/Vapor	0	8760	0.00441000	49.06%	0.33%	0.00	0.00
	Light Oil	0	8760	0.00309000	0.00%	0.00%	0.00	0.00
	Heavy Oil	0	8760	0.00030900	0.00%	0.00%	0.00	0.00
	Water/Light Oil	0	8760	0.00055000	0.00%	0.00%	0.00	0.00
Other:	Gas/Vapor	40	8760	0.01940000	49.06%	0.33%	1.73	0.01
	Light Oil	0	8760	0.01650000	0.00%	0.00%	0.00	0.00
	Heavy Oil	0	8760	0.00006800	0.00%	0.00%	0.00	0.00
	Water/Light Oil	0	8760	0.03090000	0.00%	0.00%	0.00	0.00

Emission Component	CH4 TPY	CO2 TPY
Uncontrolled Emissions	304.18	2.04

Notes:

[1] **CH4 emissions were calculated as follow: TOC lb/hr * CH4 weight % = CH4 lb/hr.**

[2] **CO2 emissions are based ratio of CH4 weight % to CO2 weight % per Exhibit 6.1 of API Compendium of Greenhouse Gas Emission Methodologies for the Oil and Natural Gas Industry; August 2009.**

XTO ENERGY INC.
HUSKY CDP
FUGITIVE EMISSIONS - HAPs

Controlled HAP Emissions

Component Type	Service	Estimated Components Count	Hours	Factors	Total HAPs Weight %	Emissions		
						lb/hour	lb/year	tons/year
Valves	Gas/Vapor	12140	8760	0.00992000	0.00%	0.000	0.00	0.000
	Light Oil	5500	8760	0.00550000	6.92%	0.817	7155.14	3.578
	Heavy Oil	159	8760	0.00001900	6.92%	0.000	1.83	0.001
	Water/Light Oil	0	8760	0.00021600	6.92%	0.000	0.00	0.000
Pump Seals	Gas/Vapor	0	8760	0.00529000	0.00%	0.000	0.00	0.000
	Light Oil	300	8760	0.02866000	6.92%	0.327	2868.06	1.434
	Heavy Oil	4	8760	0.00113000	6.92%	0.000	2.74	0.001
	Water/Light Oil	40	8760	0.00005300	6.92%	0.000	1.29	0.001
Connectors	Gas/Vapor	18000	8760	0.00044000	0.00%	0.000	0.00	0.000
	Light Oil	15000	8760	0.00046300	6.92%	0.481	4212.12	2.106
	Heavy Oil	0	8760	0.00001700	6.92%	0.000	0.00	0.000
	Water/Light Oil	1400	8760	0.00024300	6.92%	0.024	206.33	0.103
Flanges	Gas/Vapor	8354	8760	0.00086000	0.00%	0.000	0.00	0.000
	Light Oil	11000	8760	0.00024300	6.92%	0.185	1621.16	0.811
	Heavy Oil	367	8760	0.00000086	6.92%	0.000	0.19	0.000
	Water/Light Oil	1500	8760	0.00000620	6.92%	0.001	5.64	0.003
Open-ended Lines	Gas/Vapor	0	8760	0.00441000	0.00%	0.000	0.00	0.000
	Light Oil	0	8760	0.00309000	6.92%	0.000	0.00	0.000
	Heavy Oil	0	8760	0.00030900	6.92%	0.000	0.00	0.000
	Water/Light Oil	0	8760	0.00055000	6.92%	0.000	0.00	0.000
Other:	Gas/Vapor	40	8760	0.01940000	0.00%	0.000	0.00	0.000
	Light Oil	0	8760	0.01650000	6.92%	0.000	0.00	0.000
	Heavy Oil	0	8760	0.00006800	6.92%	0.000	0.00	0.000
	Water/Light Oil	0	8760	0.03090000	6.92%	0.000	0.00	0.000

Emission Component	lb/hr	lb/year	TPY
Total HAPs	1.83	16074.50	8.04

Notes:

[1] **Control efficiencies based on Table 5.2 of EPA-453/R-095-017**

Valves Gas Vapor 67% **Pump** 45% **Flanges/Connectors** 0%

Light Liquid 61%

XTO ENERGY INC.

HUSKY CDP

Truck Loading Losses - Slop Oil

Truck Loading Losses Calculations

Average BOPD	**210**
Average BOPY	**76650**

LL= 12.46 * SPM/T * (1-EFF/100)

Saturation Factor (S) =	0.6
Average True Vapor Pressure of liquid loaded (P)[a] =	10.20
Maximum True Vapor Pressure of liquid loaded (P)[a] =	10.19
Average Temperature of liquid loaded in Rankin (T) =	530.0
Maximum Temperature of liquid loaded in Rankin (T) =	550.0
Molecular Weight (M)[a] =	50.25
Control Efficiency * Collection Efficiency (EFF)=	0
LL-Average (lb Total HC / bbl Throughput) =	0.3035
LL-Maximum (lb Total HC / bbl Throughput) =	0.2923
LL-Average (lb VOC / bbl Throughput) =	**0.2693**
LL-Maximum (lb VOC / bbl Throughput) =	**0.2594**
Estimated Throughput (bbls/Year) =	76650
Truck Loading Rate (bbls/hour) =	210
Estimated # of Loads (Approximately 1 hr/Load) =	365

Total Loading Emissions[b]

	lb/hr	TPY
Total Hydrocarbon Emissions	61.39	11.63
Total HAP Emissions	1.66	0.32

Uncollected Emissions[c]

	lb/hr	TPY
Total VOC Emissions	0.71	0.13
Total HAP Emissions	0.02	0.00

XTO ENERGY INC.

HUSKY CDP

Truck Loading Losses - Slop Oil

Truck Loading Losses Calculations

Component	Total Speciated Vapors Emitted During Loading		Uncontrolled Speciated Vapor Collected to Combustor	
	Mass Fraction[d]	lb / hr	lb / hr	ton / year
Water	0.00	0.00	0.00	0.00
Hydrogen Sulfide	0.00	0.00	0.00	0.00
Nitrogen	0.00	0.00	0.00	0.00
Carbon Dioxide	0.00	0.00	0.00	0.00
Methane	0.00	0.00	0.00	0.00
Ethane	11.27	6.92	6.83	1.25
Propane	35.79	21.98	21.69	3.96
Iso-butane	8.55	5.25	5.18	0.95
N-butane	20.80	12.77	12.61	2.30
Iso-pentane	6.37	3.91	3.86	0.70
N-pentane	6.45	3.96	3.91	0.71
Cyclopentanes	0.00	0.00	0.00	0.00
Other Hexanes	2.47	1.52	1.50	0.27
n-Hexane	1.49	0.92	0.90	0.16
Methylcyclopentane	1.06	0.65	0.64	0.12
Benzene	0.67	0.41	0.41	0.07
Cyclohexane	1.71	1.05	1.04	0.19
2,2,4 Trimethylpentane	0.00	0.00	0.00	0.00
Other Heptanes	0.14	0.09	0.09	0.02
Methylcyclohexane	1.16	0.71	0.71	0.13
n-Heptane	0.75	0.46	0.45	0.08
Toluene	0.43	0.26	0.26	0.05
Octanes	0.54	0.33	0.32	0.06
Ethylbenzene	0.00	0.00	0.00	0.00
M&P-Xylene	0.12	0.07	0.07	0.01
Nonanes	0.16	0.10	0.10	0.02
Decanes	0.06	0.04	0.03	0.01
Undecanes Plus	0.00	0.00	0.00	0.00
Total	100.00	61.39	60.60	11.06
Total VOC	--	54.47	53.76	9.81
Total HAP	--	1.66	1.64	0.30

[a] Molecular Weight and VOC/HAP weight percent were obtained from Promax

[b] Loading emissions include total hydrocarbons as calculated using AP-42, Section 5.2.

[c] 98.7% of the vapors are collected and routed to the combustor. The remaining 1.3% is illustrated as truck loading emissions.

[d] The component speciation was obtained from Promax (Slop Tank W&B) and multiplied by the total hydrocarbon emissions. (VOC = 54.47 lb/hr * 98. 7% = 53.76 lb/hr)

XTO ENERGY INC.

HUSKY CDP

Produced Water

Truck Loading Losses Calculations

Average BWPD	**10029**
Average BWPY	**3660442**

LL= 12.46 * SPM/T * (1-EFF/100)

Saturation Factor (S) =	0.6
Average True Vapor Pressure of liquid loaded (P) =	0.57
Maximum True Vapor Pressure of liquid loaded (P) =	0.80
Average Temperature of liquid loaded in Rankin (T) =	543.3
Maximum Temperature of liquid loaded in Rankin (T) =	554.1
Molecular Weight (M) =	18.15
Control Efficiency * Collection Efficiency (EFF)=	0
LL-Average (lb Total HC / bbl Throughput) =	0.0060
LL-Maximum (lb Total HC / bbl Throughput) =	0.0082
LL-Average (lb VOC / bbl Throughput) =	**0.0014**
LL-Maximum (lb VOC / bbl Throughput) =	**0.0019**
Estimated Throughput (bbls/Year) =	3660442
Truck Loading Rate (bbls/hour) =	210
Estimated # of Loads (Approximately 1 hr/Load) =	17431

	lb/hr	TPY
Total VOC Emissions	0.39	2.49
Total HAP Emissions	lb/hr	TPY
	0.00	0.01

[1]Molecular Weight and VOC weight % were obtained from Promax

XTO ENERGY INC.
HUSKY CDP
ROAD EMISSIONS

PM_{30} (Total) Emissions $E = k(s/12)^a(W/3)^b$	
a	0.7
b	0.45
k	4.9
Silt Loading	4.8
Vehicle Weight (tons)	28
E-Hourly (lbs/VMT)	7.05
Rain Days	70
E-Annual (lbs/VMT)	5.70
Truckloads per year	31700
Driving Distance Per Load (ft)	3000
Annual Distance (miles)	18012
Control Efficiency - 15 MPH Limit	0.57
Control Efficiency - Base Course	0.60
Emissions (lbs/hr)	2.76
Emissions (tpy)	8.83

PM_{10} Emissions $E = k(s/12)^a(W/3)^b$	
a	0.9
b	0.45
k	1.5
Silt Loading	4.8
Vehicle Weight (tons)	28
E-Hourly (lbs/VMT)	1.80
Rain Days	70
E-Annual (lbs/VMT)	1.45
Truckloads per year	31700
Driving Distance Per Load (ft)	3000
Annual Distance (miles)	18012
Control Efficiency - 15 MPH Limit	0.57
Control Efficiency - Base Course	0.60
Emissions (lbs/hr)	0.70
Emissions (tpy)	2.25

$PM_{2.5}$ Emissions $E = k(s/12)^a(W/3)^b$	
a	0.9
b	0.45
k	0.15
Silt Loading	4.8
Vehicle Weight (tons)	28
E-Hourly (lbs/VMT)	0.18
Rain Days	70
E-Annual (lbs/VMT)	0.15
Truckloads per year	31700
Driving Distance Per Load (ft)	3000
Annual Distance (miles)	18012
Control Efficiency - 15 MPH Limit	0.57
Control Efficiency - 15 MPH Limit	0.60
Emissions (lbs/hr)	0.07
Emissions (tpy)	0.22

Notes:
Emissions (lbs/hr) = Driving Distance (ft)/ 5280 * E (lbs/VMT) * 4 * (1-control efficiency). (Four trucks per hour for 365 days a year)
Emissions (tpy) = Annual Distance * E / 2000

References:
EPA. "Compilation of Air Pollutant Emission Factors, Volume 1: Stationary Point and Area Sources," AP-42, Section 13.2.1
WRAP Fugitive Dust Handbook; September 7, 2006

Tab 7
Section 7 - Information Used To Determine Emissions

Section 7

Information Used To Determine Emissions

Information Used to Determine Emissions shall include the following:

- ☑ If manufacturer data are used, include specifications for emissions units and control equipment, including control efficiencies specifications and sufficient engineering data for verification of control equipment operation, including design drawings, test reports, and design parameters that affect normal operation.
- ☐ If test data are used, include a copy of the complete test report. If the test data are for an emissions unit other than the one being permitted, the emission units must be identical. Test data may not be used if any difference in operating conditions of the unit being permitted and the unit represented in the test report significantly effect emission rates.
- ☑ If the most current copy of AP-42 is used, reference the section and date located at the bottom of the page. Include a copy of the page containing the emissions factors, and clearly mark the factors used in the calculations.
- ☐ If an older version of AP-42 is used, include a complete copy of the section.
- ☑ If an EPA document or other material is referenced, include a complete copy.
- ☐ Fuel specifications sheet.
- ☑ If computer models are used to estimate emissions, include an input summary (if available) and a detailed report, and a disk containing the input file(s) used to run the model. For tank-flashing emissions, include a discussion of the method used to estimate tank-flashing emissions, relative thresholds (i.e., permit or major source (NSPS, PSD or Title V)), accuracy of the model, the input and output from simulation models and software, all calculations, documentation of any assumptions used, descriptions of sampling methods and conditions, copies of any lab sample analysis.

A reservoir fluid study was conducted on a well fluid sample taken from a representative formation in the Delaware Basin. The laboratory report is included as confidential information in Tab 24. The analysis was conducted to determine the type and character of the reservoir fluid & compositional analyses of the separator gas, separator HC liquid and mathematically recombined wellstream fluid. This fluid analysis was used in HYSYS to simulate the well fluids flowing into Husky from surrounding batteries. The gas analysis from the reservoir fluid study was used in the ProMax simulation for the amine unit. ProMax and HYSYS simulation results are provided in this section. The following ProMax streams were taken directly from the analysis data:

- "Wellstream" – recombined fluid downhole wellstream to the inlet separator. The composition was used to determine the oil composition from the field for the third party oil sent to the fixed roof oil storage tanks. This stream is identified in the Promax Simulation - Inlet Oil portion of Section 7.
- "3" – Inlet gas from the field used for the amine unit process simulation. This stream is identified in the Promax Simulation – Amine Treating portion of Section 7.

A representative sample was used in the process simulation design analysis for the Husky CDP. XTO Energy used the representative analysis as an inlet composition of gas and oil to simulate the cryogenic gas plant and oil/NGL stabilization processes at the Husky facility in HYSYS. The HYSYS simulation results are provided in Section 7.

XTO used process stream compositions generated by the HSYS process simulation as input compositions in a ProMax simulation for the CDP, in order to simulate tank emissions. The following HYSYS process streams were extracted from the HYSYS report and used in ProMax CDP simulation:

- "Inlet Gas" – Used for Inlet Gas composition
- "To oil pl" – Used for IFR tank inlet composition
- "To slop oil" – Used for Drain Vessel oil that is sent to the slop tank
- "To GB2" – Used for Drain Vessel water that is sent to the gunbarrel
- "WiO2" – Used for Surge Vessel water that is sent to the gunbarrel
- "Oil OVHD" – Used for gas composition of the stabilizer overhead gas MSS events (process purge gas flaring).
- "Residue Gas" – Used for pilot fuels and flare header purge gas compositions.

The following supplemental documents are provided in support of the calculations:

- Representative Analysis
- HYSYS Simulation
- Promax Simulation
- Turbine Manufacturer Data
- Heater Manufacturer Data
- Thermal Oxidizer Manufacturer Data
- Flare Manufacturer Data
- Enclosed Combustor Manufacturer Data
- Generator Manufacturer Data
- AP-42 and Other Emissions Guidance as Noted

HYSYS Simulation

XTO Initial Separator

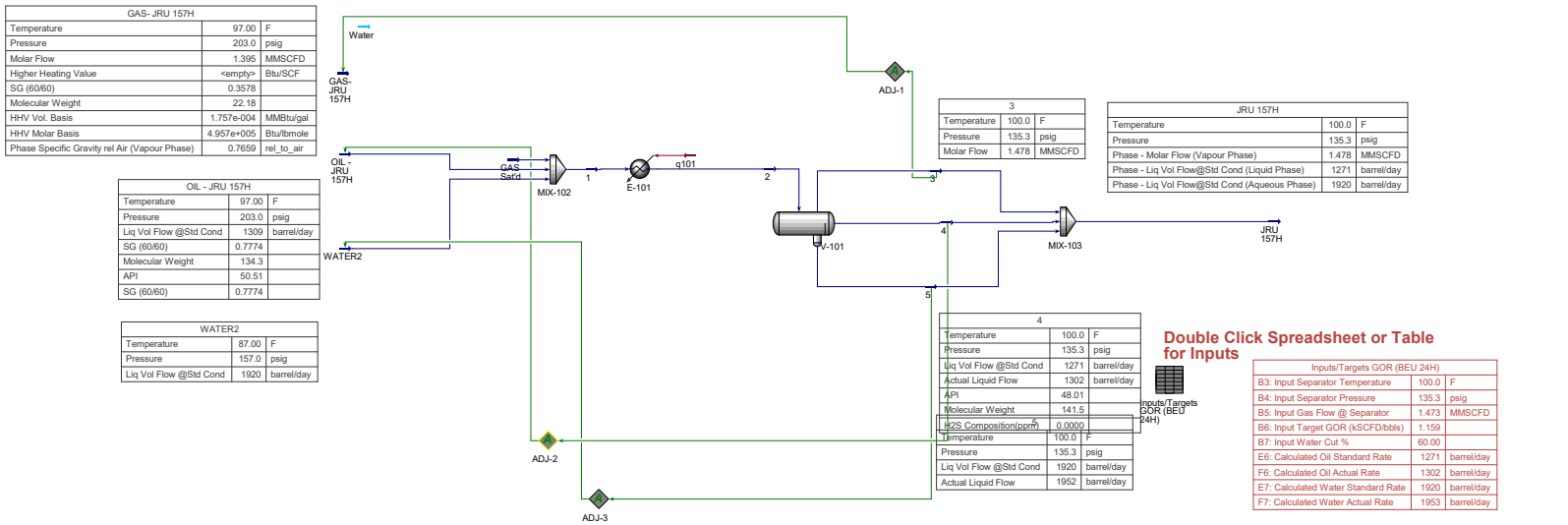

GAS- JRU 157H		
Temperature	97.00	F
Pressure	203.0	psig
Molar Flow	1.395	MMSCFD
Higher Heating Value	<empty>	Btu/SCF
SG (60/60)	0.3578	
Molecular Weight	22.18	
HHV Vol. Basis	1.757e-004	MMBtu/gal
HHV Molar Basis	4.957e+005	Btu/lbmole
Phase Specific Gravity rel Air (Vapour Phase)	0.7659	rel_to_air

OIL - JRU 157H		
Temperature	97.00	F
Pressure	203.0	psig
Liq Vol Flow @Std Cond	1309	barrel/day
SG (60/60)	0.7774	
Molecular Weight	134.3	
API	50.51	
SG (60/60)	0.7774	

WATER2		
Temperature	87.00	F
Pressure	157.0	psig
Liq Vol Flow @Std Cond	1920	barrel/day

3		
Temperature	100.0	F
Pressure	135.3	psig
Molar Flow	1.478	MMSCFD

JRU 157H		
Temperature	100.0	F
Pressure	135.3	psig
Phase - Molar Flow (Vapour Phase)	1.478	MMSCFD
Phase - Liq Vol Flow@Std Cond (Liquid Phase)	1271	barrel/day
Phase - Liq Vol Flow@Std Cond (Aqueous Phase)	1920	barrel/day

4		
Temperature	100.0	F
Pressure	135.3	psig
Liq Vol Flow @Std Cond	1271	barrel/day
Actual Liquid Flow	1302	barrel/day
API	48.01	
Molecular Weight	141.5	
H2S Composition(ppm)	0.0000	

5		
Temperature	100.0	F
Pressure	135.3	psig
Liq Vol Flow @Std Cond	1920	barrel/day
Actual Liquid Flow	1952	barrel/day

Double Click Spreadsheet or Table for Inputs

Inputs/Targets GOR (BEU 24H)		
B3: Input Separator Temperature	100.0	F
B4: Input Separator Pressure	135.3	psig
B5: Input Gas Flow @ Separator	1.473	MMSCFD
B6: Input Target GOR (kSCFD/bbls)	1.159	
B7: Input Water Cut %	60.00	
E6: Calculated Oil Standard Rate	1271	barrel/day
F6: Calculated Oil Actual Rate	1302	barrel/day
E7: Calculated Water Standard Rate	1920	barrel/day
F7: Calculated Water Actual Rate	1953	barrel/day

Make sure adjust blocks converge (not yellow)

Material Stream: OIL - JRU 157H

Fluid Package: Basis-2
Property Package: Peng-Robinson

CONDITIONS

		Overall	Liquid Phase			
Vapour / Phase Fraction		0.0000	1.0000			
Temperature:	(F)	97.00 *	97.00			
Pressure:	(psig)	203.0 *	203.0			
Molar Flow	(MMSCFD)	1.029	1.029			
Mass Flow	(lb/hr)	1.518e+004	1.518e+004			
Std Ideal Liq Vol Flow	(barrel/day)	1338	1338			
Molar Enthalpy	(Btu/lbmole)	-1.205e+005	-1.205e+005			
Molar Entropy	(Btu/lbmole-F)	57.54	57.54			
Heat Flow	(Btu/hr)	-1.362e+007	-1.362e+007			
Liq Vol Flow @Std Cond	(barrel/day)	1309 *	1309			

PROPERTIES

		Overall	Liquid Phase			
Molecular Weight		134.3	134.3			
Molar Density	(lbmole/ft3)	0.3606	0.3606			
Mass Density	(lb/ft3)	48.41	48.41			
Act. Volume Flow	(barrel/day)	1340	1340			
Mass Enthalpy	(Btu/lb)	-897.3	-897.3			
Mass Entropy	(Btu/lb-F)	0.4286	0.4286			
Heat Capacity	(Btu/lbmole-F)	63.85	63.85			
Mass Heat Capacity	(Btu/lb-F)	0.4756	0.4756			
LHV Molar Basis (Std)	(Btu/SCF)	---	---			
HHV Molar Basis (Std)	(Btu/SCF)	---	---			
HHV Mass Basis (Std)	(Btu/lb)	---	---			
CO2 Loading		---	---			
CO2 App ML Con	(lbmole/ft3)	8.294e-005	8.294e-005			
CO2 App WT Con	(lbmol/lb)	1.713e-006	1.713e-006			
LHV Mass Basis (Std)	(Btu/lb)	---	---			
Phase Fraction [Vol. Basis]		0.0000	1.000			
Phase Fraction [Mass Basis]		0.0000	1.000			
Phase Fraction [Act. Vol. Basis]		0.0000	1.000			
Mass Exergy	(Btu/lb)	2.744	---			
Partial Pressure of CO2	(psig)	-14.70	---			
Cost Based on Flow	(Cost/s)	0.0000	0.0000			
Act. Gas Flow	(ACFM)	---	---			
Avg. Liq. Density	(lbmole/ft3)	0.3611	0.3611			
Specific Heat	(Btu/lbmole-F)	63.85	63.85			
Std. Gas Flow	(MMSCFD)	1.027	1.027			
Std. Ideal Liq. Mass Density	(lb/ft3)	48.48	48.48			
Act. Liq. Flow	(barrel/day)	1340	1340			
Z Factor		0.1011	0.1011			
Watson K		11.84	11.84			
User Property		---	---			
Partial Pressure of H2S	(psig)	-14.70	---			
Cp/(Cp - R)		1.032	1.032			
Cp/Cv		1.231	1.231			
Heat of Vap.	(Btu/lbmole)	7.793e+004	---			
Kinematic Viscosity	(cSt)	1.640	1.640			
Liq. Mass Density (Std. Cond)	(lb/ft3)	49.55	49.55			
Liq. Vol. Flow (Std. Cond)	(barrel/day)	1309	1309			
Liquid Fraction		1.000	1.000			

* Specified by user.

Material Stream: OIL - JRU 157H (continued)

Fluid Package: Basis-2
Property Package: Peng-Robinson

PROPERTIES

		Overall	Liquid Phase			
Molar Volume	(ft3/lbmole)	2.773	2.773			
Mass Heat of Vap.	(Btu/lb)	580.5	---			
Phase Fraction [Molar Basis]		0.0000	1.0000			
Surface Tension	(dyne/cm)	19.11	19.11			
Thermal Conductivity	(Btu/hr-ft-F)	6.241e-002	6.241e-002			
Viscosity	(cP)	1.272	1.272			
Cv (Semi-Ideal)	(Btu/lbmole-F)	61.87	61.87			
Mass Cv (Semi-Ideal)	(Btu/lb-F)	0.4608	0.4608			
Cv	(Btu/lbmole-F)	51.87	51.87			
Mass Cv	(Btu/lb-F)	0.3863	0.3863			
Cv (Ent. Method)	(Btu/lbmole-F)	55.09	55.09			
Mass Cv (Ent. Method)	(Btu/lb-F)	0.4103	0.4103			
Cp/Cv (Ent. Method)		1.159	1.159			
Reid VP at 37.8 C	(psig)	40.05	40.05			
True VP at 37.8 C	(psig)	203.7	203.7			
Liq. Vol. Flow - Sum(Std. Cond)	(barrel/day)	1309	1309			
Viscosity Index		9.314	---			
Ideal Gas Cp/Cv		1.040	1.040			
Ideal Gas Cp	(Btu/lbmole-F)	51.14	51.14			
Mass Ideal Gas Cp	(Btu/lb-F)	0.3809	0.3809			
Bubble Point Pressure	(psig)	200.6	---			

COMPOSITION

Overall Phase

Vapour Fraction 0.0000

COMPONENTS	MOLAR FLOW (lbmole/hr)	MOLE FRACTION	MASS FLOW (lb/hr)	MASS FRACTION	LIQUID VOLUME FLOW (barrel/day)	LIQUID VOLUME FRACTION
Oxygen	0.0000 *	0.0000 *	0.0000 *	0.0000 *	0.0000 *	0.0000 *
H2S	0.0000 *	0.0000 *	0.0000 *	0.0000 *	0.0000 *	0.0000 *
Nitrogen	0.0350 *	0.0003 *	0.9815 *	0.0001 *	0.0833 *	0.0001 *
CO2	0.0260 *	0.0002 *	1.1441 *	0.0001 *	0.0949 *	0.0001 *
Methane	5.1993 *	0.0460 *	83.4113 *	0.0055 *	19.0766 *	0.0143 *
Ethane	5.3191 *	0.0471 *	159.9440 *	0.0105 *	30.7909 *	0.0230 *
Propane	7.8170 *	0.0692 *	344.7054 *	0.0227 *	46.5837 *	0.0348 *
i-Butane	1.9181 *	0.0170 *	111.4863 *	0.0073 *	13.5841 *	0.0102 *
n-Butane	6.2029 *	0.0549 *	360.5401 *	0.0238 *	42.3289 *	0.0316 *
22-Mpropane	0.0780 *	0.0007 *	5.6270 *	0.0004 *	0.6469 *	0.0005 *
i-Pentane	2.8777 *	0.0255 *	207.6274 *	0.0137 *	22.8038 *	0.0170 *
n-Pentane	3.7853 *	0.0335 *	273.1125 *	0.0180 *	29.6966 *	0.0222 *
22-Mbutane	0.0316 *	0.0003 *	2.7273 *	0.0002 *	0.2862 *	0.0002 *
Cyclopentane	0.0000 *	0.0000 *	0.0000 *	0.0000 *	0.0000 *	0.0000 *
23-Mbutane	0.4126 *	0.0036 *	35.5527 *	0.0023 *	3.6598 *	0.0027 *
2-Mpentane	1.3021 *	0.0115 *	112.2102 *	0.0074 *	11.7034 *	0.0087 *
3-Mpentane	0.7731 *	0.0068 *	66.6248 *	0.0044 *	6.8326 *	0.0051 *
n-Hexane	2.0616 *	0.0182 *	177.6662 *	0.0117 *	18.3582 *	0.0137 *
Hexanes*	0.0000 *	0.0000 *	0.0000 *	0.0000 *	0.0000 *	0.0000 *
Mcyclopentan	1.6875 *	0.0149 *	142.0232 *	0.0094 *	12.9307 *	0.0097 *
Benzene	1.5824 *	0.0140 *	123.6001 *	0.0081 *	9.5935 *	0.0072 *
Cyclohexane	3.9017 *	0.0345 *	328.3678 *	0.0216 *	28.7588 *	0.0215 *
2-Mhexane	0.7754 *	0.0069 *	77.6958 *	0.0051 *	7.8059 *	0.0058 *
3-Mhexane	0.7019 *	0.0062 *	70.3339 *	0.0046 *	6.9776 *	0.0052 *

* Specified by user.

Material Stream: OIL - JRU 157H (continued)

Fluid Package: Basis-2
Property Package: Peng-Robinson

COMPOSITION

Overall Phase (continued)

Vapour Fraction 0.0000

COMPONENTS	MOLAR FLOW (lbmole/hr)	MOLE FRACTION	MASS FLOW (lb/hr)	MASS FRACTION	LIQUID VOLUME FLOW (barrel/day)	LIQUID VOLUME FRACTION
224-Mpentane	0.0000 *	0.0000 *	0.0000 *	0.0000 *	0.0000 *	0.0000 *
n-Heptane	1.7418 *	0.0154 *	174.5324 *	0.0115 *	17.4002 *	0.0130 *
Heptanes*	1.5700 *	0.0139 *	150.7153 *	0.0099 *	14.2238 *	0.0106 *
Mcyclohexane	4.8455 *	0.0429 *	475.7736 *	0.0314 *	42.1756 *	0.0315 *
Toluene	2.8788 *	0.0255 *	265.2558 *	0.0175 *	20.8757 *	0.0156 *
n-Octane	1.5609 *	0.0138 *	178.3058 *	0.0117 *	17.3086 *	0.0129 *
Octanes*	4.7019 *	0.0416 *	503.1079 *	0.0332 *	46.0863 *	0.0344 *
E-Benzene	0.1707 *	0.0015 *	18.1195 *	0.0012 *	1.4260 *	0.0011 *
m-Xylene	0.7330 *	0.0065 *	77.8179 *	0.0051 *	6.1466 *	0.0046 *
o-Xylene	0.3696 *	0.0033 *	39.2389 *	0.0026 *	3.0423 *	0.0023 *
p-Xylene	0.7330 *	0.0065 *	77.8179 *	0.0051 *	6.1655 *	0.0046 *
Nonanes*	5.6909 *	0.0503 *	688.6029 *	0.0454 *	61.5178 *	0.0460 *
Decanes*	5.4909 *	0.0486 *	735.7772 *	0.0485 *	64.5554 *	0.0483 *
Undecanes*	4.1854 *	0.0370 *	615.2549 *	0.0405 *	53.2323 *	0.0398 *
Dodecanes*	3.2450 *	0.0287 *	522.4480 *	0.0344 *	44.5841 *	0.0333 *
Triadecanes*	3.3953 *	0.0300 *	594.1854 *	0.0392 *	50.0216 *	0.0374 *
Tetradecanes*	2.9523 *	0.0261 *	560.9327 *	0.0370 *	46.5933 *	0.0348 *
Pentadecanes*	2.5578 *	0.0226 *	526.9092 *	0.0347 *	43.2437 *	0.0323 *
Hexadecanes*	2.1498 *	0.0190 *	477.2517 *	0.0314 *	38.8430 *	0.0290 *
Heptadecanes*	1.8231 *	0.0161 *	432.0825 *	0.0285 *	34.8361 *	0.0260 *
Octadecanes*	1.8412 *	0.0163 *	462.1456 *	0.0305 *	37.0423 *	0.0277 *
Nonadecanes*	1.5700 *	0.0139 *	412.8973 *	0.0272 *	32.9027 *	0.0246 *
eicosanes*	1.3586 *	0.0120 *	373.6123 *	0.0246 *	29.6003 *	0.0221 *
Heneicosanes*	1.1619 *	0.0103 *	338.1194 *	0.0223 *	26.6345 *	0.0199 *
Dodocosanes*	1.0534 *	0.0093 *	316.0248 *	0.0208 *	24.7520 *	0.0185 *
Triacosanes*	1.0139 *	0.0090 *	316.3232 *	0.0208 *	24.6347 *	0.0184 *
Tetracosanes*	0.9110 *	0.0081 *	295.1645 *	0.0195 *	22.8830 *	0.0171 *
Pentacosanes*	0.9494 *	0.0084 *	319.9582 *	0.0211 *	24.7214 *	0.0185 *
Hexacosanes*	0.7460 *	0.0066 *	260.3475 *	0.0172 *	20.0254 *	0.0150 *
Heptacosanes*	0.8194 *	0.0072 *	295.0017 *	0.0194 *	22.5897 *	0.0169 *
Octacosanes*	0.6635 *	0.0059 *	246.8113 *	0.0163 *	18.8364 *	0.0141 *
Nonacosanes*	0.6748 *	0.0060 *	257.7637 *	0.0170 *	19.6069 *	0.0147 *
Triacontanes*	0.6454 *	0.0057 *	254.2824 *	0.0168 *	19.2392 *	0.0144 *
C31+*	2.3374 *	0.0207 *	1227.1392 *	0.0809 *	89.5693 *	0.0669 *
H2O	0.0000 *	0.0000 *	0.0000 *	0.0000 *	0.0000 *	0.0000 *
DTRM-G	0.0000 *	0.0000 *	0.0000 *	0.0000 *	0.0000 *	0.0000 *
decanes+ (SS)*	0.0000 *	0.0000 *	0.0000 *	0.0000 *	0.0000 *	0.0000 *
heptanes+ (464H)*	0.0000 *	0.0000 *	0.0000 *	0.0000 *	0.0000 *	0.0000 *
hept + (474Y)*	0.0000 *	0.0000 *	0.0000 *	0.0000 *	0.0000 *	0.0000 *
Total	113.0297	1.0000	15175.1020	1.0000	1337.9123	1.0000

Liquid Phase

Phase Fraction 1.000

COMPONENTS	MOLAR FLOW (lbmole/hr)	MOLE FRACTION	MASS FLOW (lb/hr)	MASS FRACTION	LIQUID VOLUME FLOW (barrel/day)	LIQUID VOLUME FRACTION
Oxygen	0.0000	0.0000	0.0000	0.0000	0.0000	0.0000
H2S	0.0000	0.0000	0.0000	0.0000	0.0000	0.0000
Nitrogen	0.0350	0.0003	0.9815	0.0001	0.0833	0.0001
CO2	0.0260	0.0002	1.1441	0.0001	0.0949	0.0001

* Specified by user.

Material Stream: OIL - JRU 157H (continued)

Fluid Package: Basis-2
Property Package: Peng-Robinson

COMPOSITION

Liquid Phase (continued)

Phase Fraction 1.000

COMPONENTS	MOLAR FLOW (lbmole/hr)	MOLE FRACTION	MASS FLOW (lb/hr)	MASS FRACTION	LIQUID VOLUME FLOW (barrel/day)	LIQUID VOLUME FRACTION
Methane	5.1993	0.0460	83.4113	0.0055	19.0766	0.0143
Ethane	5.3191	0.0471	159.9440	0.0105	30.7909	0.0230
Propane	7.8170	0.0692	344.7054	0.0227	46.5837	0.0348
i-Butane	1.9181	0.0170	111.4863	0.0073	13.5841	0.0102
n-Butane	6.2029	0.0549	360.5401	0.0238	42.3289	0.0316
22-Mpropane	0.0780	0.0007	5.6270	0.0004	0.6469	0.0005
i-Pentane	2.8777	0.0255	207.6274	0.0137	22.8038	0.0170
n-Pentane	3.7853	0.0335	273.1125	0.0180	29.6966	0.0222
22-Mbutane	0.0316	0.0003	2.7273	0.0002	0.2862	0.0002
Cyclopentane	0.0000	0.0000	0.0000	0.0000	0.0000	0.0000
23-Mbutane	0.4126	0.0036	35.5527	0.0023	3.6598	0.0027
2-Mpentane	1.3021	0.0115	112.2102	0.0074	11.7034	0.0087
3-Mpentane	0.7731	0.0068	66.6248	0.0044	6.8326	0.0051
n-Hexane	2.0616	0.0182	177.6662	0.0117	18.3582	0.0137
Hexanes*	0.0000	0.0000	0.0000	0.0000	0.0000	0.0000
Mcyclopentan	1.6875	0.0149	142.0232	0.0094	12.9307	0.0097
Benzene	1.5824	0.0140	123.6001	0.0081	9.5935	0.0072
Cyclohexane	3.9017	0.0345	328.3678	0.0216	28.7588	0.0215
2-Mhexane	0.7754	0.0069	77.6958	0.0051	7.8059	0.0058
3-Mhexane	0.7019	0.0062	70.3339	0.0046	6.9776	0.0052
224-Mpentane	0.0000	0.0000	0.0000	0.0000	0.0000	0.0000
n-Heptane	1.7418	0.0154	174.5324	0.0115	17.4002	0.0130
Heptanes*	1.5700	0.0139	150.7153	0.0099	14.2238	0.0106
Mcyclohexane	4.8455	0.0429	475.7736	0.0314	42.1756	0.0315
Toluene	2.8788	0.0255	265.2558	0.0175	20.8757	0.0156
n-Octane	1.5609	0.0138	178.3058	0.0117	17.3086	0.0129
Octanes*	4.7019	0.0416	503.1079	0.0332	46.0863	0.0344
E-Benzene	0.1707	0.0015	18.1195	0.0012	1.4260	0.0011
m-Xylene	0.7330	0.0065	77.8179	0.0051	6.1466	0.0046
o-Xylene	0.3696	0.0033	39.2389	0.0026	3.0423	0.0023
p-Xylene	0.7330	0.0065	77.8179	0.0051	6.1655	0.0046
Nonanes*	5.6909	0.0503	688.6029	0.0454	61.5178	0.0460
Decanes*	5.4909	0.0486	735.7772	0.0485	64.5554	0.0483
Undecanes*	4.1854	0.0370	615.2549	0.0405	53.2323	0.0398
Dodecanes*	3.2450	0.0287	522.4480	0.0344	44.5841	0.0333
Triadecanes*	3.3953	0.0300	594.1854	0.0392	50.0216	0.0374
Tetradecanes*	2.9523	0.0261	560.9327	0.0370	46.5933	0.0348
Pentadecanes*	2.5578	0.0226	526.9092	0.0347	43.2437	0.0323
Hexadecanes*	2.1498	0.0190	477.2517	0.0314	38.8430	0.0290
Heptadecanes*	1.8231	0.0161	432.0825	0.0285	34.8361	0.0260
Octadecanes*	1.8412	0.0163	462.1456	0.0305	37.0423	0.0277
Nonadecanes*	1.5700	0.0139	412.8973	0.0272	32.9027	0.0246
eicosanes*	1.3586	0.0120	373.6123	0.0246	29.6003	0.0221
Heneicosanes*	1.1619	0.0103	338.1194	0.0223	26.6345	0.0199
Dodocosanes*	1.0534	0.0093	316.0248	0.0208	24.7520	0.0185
Triacosanes*	1.0139	0.0090	316.3232	0.0208	24.6347	0.0184
Tetracosanes*	0.9110	0.0081	295.1645	0.0195	22.8830	0.0171
Pentacosanes*	0.9494	0.0084	319.9582	0.0211	24.7214	0.0185

Licensed to: EXXONMOBIL TECHNICAL COM
* Specified by user.

Material Stream: OIL - JRU 157H (continued)

Fluid Package: Basis-2
Property Package: Peng-Robinson

COMPOSITION

Liquid Phase (continued)

Phase Fraction 1.000

COMPONENTS	MOLAR FLOW (lbmole/hr)	MOLE FRACTION	MASS FLOW (lb/hr)	MASS FRACTION	LIQUID VOLUME FLOW (barrel/day)	LIQUID VOLUME FRACTION
Hexacosanes*	0.7460	0.0066	260.3475	0.0172	20.0254	0.0150
Heptacosanes*	0.8194	0.0072	295.0017	0.0194	22.5897	0.0169
Octacosanes*	0.6635	0.0059	246.8113	0.0163	18.8364	0.0141
Nonacosanes*	0.6748	0.0060	257.7637	0.0170	19.6069	0.0147
Triacontanes*	0.6454	0.0057	254.2824	0.0168	19.2392	0.0144
C31+*	2.3374	0.0207	1227.1392	0.0809	89.5693	0.0669
H2O	0.0000	0.0000	0.0000	0.0000	0.0000	0.0000
DTRM-G	0.0000	0.0000	0.0000	0.0000	0.0000	0.0000
decanes+ (SS)*	0.0000	0.0000	0.0000	0.0000	0.0000	0.0000
heptanes+ (464H)*	0.0000	0.0000	0.0000	0.0000	0.0000	0.0000
hept + (474Y)*	0.0000	0.0000	0.0000	0.0000	0.0000	0.0000
Total	113.0297	1.0000	15175.1020	1.0000	1337.9123	1.0000

Licensed to: EXXONMOBIL TECHNICAL COM
* Specified by user.

Material Stream: GAS- JRU 157H

Fluid Package: Basis-2
Property Package: Peng-Robinson

CONDITIONS

	Overall	Vapour Phase
Vapour / Phase Fraction	1.0000	1.0000
Temperature: (F)	97.00 *	97.00
Pressure: (psig)	203.0 *	203.0
Molar Flow (MMSCFD)	1.395 *	1.395
Mass Flow (lb/hr)	3397	3397
Std Ideal Liq Vol Flow (barrel/day)	650.8	650.8
Molar Enthalpy (Btu/lbmole)	-3.432e+004	-3.432e+004
Molar Entropy (Btu/lbmole-F)	39.90	39.90
Heat Flow (Btu/hr)	-5.255e+006	-5.255e+006
Liq Vol Flow @Std Cond (barrel/day)	2.468e+005 *	2.468e+005

PROPERTIES

	Overall	Vapour Phase
Molecular Weight	22.18	22.18
Molar Density (lbmole/ft3)	3.855e-002	3.855e-002
Mass Density (lb/ft3)	0.8551	0.8551
Act. Volume Flow (barrel/day)	1.698e+004	1.698e+004
Mass Enthalpy (Btu/lb)	-1547	-1547
Mass Entropy (Btu/lb-F)	1.798	1.798
Heat Capacity (Btu/lbmole-F)	11.21	11.21
Mass Heat Capacity (Btu/lb-F)	0.5055	0.5055
LHV Molar Basis (Std) (Btu/SCF)	---	---
HHV Molar Basis (Std) (Btu/SCF)	---	---
HHV Mass Basis (Std) (Btu/lb)	---	---
CO2 Loading	---	---
CO2 App ML Con (lbmole/ft3)	---	---
CO2 App WT Con (lbmol/lb)	---	---
LHV Mass Basis (Std) (Btu/lb)	---	---
Phase Fraction [Vol. Basis]	1.000	1.000
Phase Fraction [Mass Basis]	1.000	1.000
Phase Fraction [Act. Vol. Basis]	1.000	1.000
Mass Exergy (Btu/lb)	126.9	---
Partial Pressure of CO2 (psig)	-14.31	---
Cost Based on Flow (Cost/s)	0.0000	0.0000
Act. Gas Flow (ACFM)	66.21	66.21
Avg. Liq. Density (lbmole/ft3)	1.006	1.006
Specific Heat (Btu/lbmole-F)	11.21	11.21
Std. Gas Flow (MMSCFD)	1.392	1.392
Std. Ideal Liq. Mass Density (lb/ft3)	22.31	22.31
Act. Liq. Flow (barrel/day)	---	---
Z Factor	0.9454	0.9454
Watson K	17.64	17.64
User Property	---	---
Partial Pressure of H2S (psig)	-14.70	---
Cp/(Cp - R)	1.215	1.215
Cp/Cv	1.288	1.288
Heat of Vap. (Btu/lbmole)	6511	---
Kinematic Viscosity (cSt)	0.8541	0.8541
Liq. Mass Density (Std. Cond) (lb/ft3)	5.884e-002	5.884e-002
Liq. Vol. Flow (Std. Cond) (barrel/day)	2.468e+005	2.468e+005
Liquid Fraction	0.0000	0.0000

Licensed to: EXXONMOBIL TECHNICAL COM
* Specified by user.

Material Stream: GAS- JRU 157H (continued)

Fluid Package: Basis-2
Property Package: Peng-Robinson

PROPERTIES

		Overall	Vapour Phase			
Molar Volume	(ft3/lbmole)	25.94	25.94			
Mass Heat of Vap.	(Btu/lb)	293.5	---			
Phase Fraction [Molar Basis]		1.0000	1.0000			
Surface Tension	(dyne/cm)	---	---			
Thermal Conductivity	(Btu/hr-ft-F)	1.833e-002	1.833e-002			
Viscosity	(cP)	1.170e-002	1.170e-002			
Cv (Semi-Ideal)	(Btu/lbmole-F)	9.227	9.227			
Mass Cv (Semi-Ideal)	(Btu/lb-F)	0.4159	0.4159			
Cv	(Btu/lbmole-F)	8.708	8.708			
Mass Cv	(Btu/lb-F)	0.3926	0.3926			
Cv (Ent. Method)	(Btu/lbmole-F)	---	---			
Mass Cv (Ent. Method)	(Btu/lb-F)	---	---			
Cp/Cv (Ent. Method)		---	---			
Reid VP at 37.8 C	(psig)	---	---			
True VP at 37.8 C	(psig)	---	---			
Liq. Vol. Flow - Sum(Std. Cond)	(barrel/day)	2.468e+005	2.468e+005			
Viscosity Index		-27.10	---			
Ideal Gas Cp/Cv		1.230	1.230			
Ideal Gas Cp	(Btu/lbmole-F)	10.63	10.63			
Mass Ideal Gas Cp	(Btu/lb-F)	0.4792	0.4792			
Bubble Point Pressure	(psig)	---	---			

COMPOSITION

Overall Phase

Vapour Fraction 1.0000

COMPONENTS	MOLAR FLOW (lbmole/hr)	MOLE FRACTION	MASS FLOW (lb/hr)	MASS FRACTION	LIQUID VOLUME FLOW (barrel/day)	LIQUID VOLUME FRACTION
Oxygen	0.0000 *	0.0000 *	0.0000 *	0.0000 *	0.0000 *	0.0000 *
H2S	0.0000 *	0.0000 *	0.0000 *	0.0000 *	0.0000 *	0.0000 *
Nitrogen	2.6461 *	0.0173 *	74.1251 *	0.0218 *	6.2943 *	0.0097 *
CO2	0.2741 *	0.0018 *	12.0632 *	0.0036 *	1.0008 *	0.0015 *
Methane	111.9186 *	0.7309 *	1795.4991 *	0.5286 *	410.6392 *	0.6310 *
Ethane	21.7997 *	0.1424 *	655.5143 *	0.1930 *	126.1936 *	0.1939 *
Propane	10.4129 *	0.0680 *	459.1770 *	0.1352 *	62.0535 *	0.0953 *
i-Butane	1.2296 *	0.0080 *	71.4716 *	0.0210 *	8.7085 *	0.0134 *
n-Butane	2.7334 *	0.0178 *	158.8751 *	0.0468 *	18.6526 *	0.0287 *
22-Mpropane	0.0061 *	0.0000 *	0.4419 *	0.0001 *	0.0508 *	0.0001 *
i-Pentane	0.5712 *	0.0037 *	41.2110 *	0.0121 *	4.5262 *	0.0070 *
n-Pentane	0.5758 *	0.0038 *	41.5425 *	0.0122 *	4.5171 *	0.0069 *
22-Mbutane	0.0061 *	0.0000 *	0.5279 *	0.0002 *	0.0554 *	0.0001 *
Cyclopentane	0.0000 *	0.0000 *	0.0000 *	0.0000 *	0.0000 *	0.0000 *
23-Mbutane	0.0475 *	0.0003 *	4.0909 *	0.0012 *	0.4211 *	0.0006 *
2-Mpentane	0.1103 *	0.0007 *	9.5015 *	0.0028 *	0.9910 *	0.0015 *
3-Mpentane	0.0582 *	0.0004 *	5.0147 *	0.0015 *	0.5143 *	0.0008 *
n-Hexane	0.1256 *	0.0008 *	10.8211 *	0.0032 *	1.1181 *	0.0017 *
Hexanes*	0.0000 *	0.0000 *	0.0000 *	0.0000 *	0.0000 *	0.0000 *
Mcyclopentan	0.0766 *	0.0005 *	6.4439 *	0.0019 *	0.5867 *	0.0009 *
Benzene	0.0781 *	0.0005 *	6.1001 *	0.0018 *	0.4735 *	0.0007 *
Cyclohexane	0.1363 *	0.0009 *	11.4699 *	0.0034 *	1.0045 *	0.0015 *
2-Mhexane	0.0153 *	0.0001 *	1.5344 *	0.0005 *	0.1542 *	0.0002 *
3-Mhexane	0.0168 *	0.0001 *	1.6879 *	0.0005 *	0.1675 *	0.0003 *

* Specified by user.

Material Stream: GAS- JRU 157H (continued)

Fluid Package: Basis-2
Property Package: Peng-Robinson

COMPOSITION

Overall Phase (continued)

Vapour Fraction 1.0000

COMPONENTS	MOLAR FLOW (lbmole/hr)	MOLE FRACTION	MASS FLOW (lb/hr)	MASS FRACTION	LIQUID VOLUME FLOW (barrel/day)	LIQUID VOLUME FRACTION
224-Mpentane	0.0000 *	0.0000 *	0.0000 *	0.0000 *	0.0000 *	0.0000 *
n-Heptane	0.0322 *	0.0002 *	3.2223 *	0.0009 *	0.3213 *	0.0005 *
Heptanes*	0.0490 *	0.0003 *	4.7042 *	0.0014 *	0.4440 *	0.0007 *
Mcyclohexane	0.0812 *	0.0005 *	7.9689 *	0.0023 *	0.7064 *	0.0011 *
Toluene	0.0413 *	0.0003 *	3.8096 *	0.0011 *	0.2998 *	0.0005 *
n-Octane	0.0107 *	0.0001 *	1.2245 *	0.0004 *	0.1189 *	0.0002 *
Octanes*	0.0429 *	0.0003 *	4.5878 *	0.0014 *	0.4203 *	0.0006 *
E-Benzene	0.0031 *	0.0000 *	0.3251 *	0.0001 *	0.0256 *	0.0000 *
m-Xylene	0.0061 *	0.0000 *	0.6503 *	0.0002 *	0.0514 *	0.0001 *
o-Xylene	0.0015 *	0.0000 *	0.1626 *	0.0000 *	0.0126 *	0.0000 *
p-Xylene	0.0000 *	0.0000 *	0.0016 *	0.0000 *	0.0001 *	0.0000 *
Nonanes*	0.0184 *	0.0001 *	2.2235 *	0.0007 *	0.1986 *	0.0003 *
Decanes*	0.0061 *	0.0000 *	0.8208 *	0.0002 *	0.0720 *	0.0001 *
Undecanes*	0.0002 *	0.0000 *	0.0315 *	0.0000 *	0.0027 *	0.0000 *
Dodecanes*	0.0001 *	0.0000 *	0.0148 *	0.0000 *	0.0013 *	0.0000 *
Triadecanes*	0.0000 *	0.0000 *	0.0000 *	0.0000 *	0.0000 *	0.0000 *
Tetradecanes*	0.0000 *	0.0000 *	0.0000 *	0.0000 *	0.0000 *	0.0000 *
Pentadecanes*	0.0000 *	0.0000 *	0.0000 *	0.0000 *	0.0000 *	0.0000 *
Hexadecanes*	0.0000 *	0.0000 *	0.0000 *	0.0000 *	0.0000 *	0.0000 *
Heptadecanes*	0.0000 *	0.0000 *	0.0000 *	0.0000 *	0.0000 *	0.0000 *
Octadecanes*	0.0000 *	0.0000 *	0.0000 *	0.0000 *	0.0000 *	0.0000 *
Nonadecanes*	0.0000 *	0.0000 *	0.0000 *	0.0000 *	0.0000 *	0.0000 *
eicosanes*	0.0000 *	0.0000 *	0.0000 *	0.0000 *	0.0000 *	0.0000 *
Heneicosanes*	0.0000 *	0.0000 *	0.0000 *	0.0000 *	0.0000 *	0.0000 *
Dodocosanes*	0.0000 *	0.0000 *	0.0000 *	0.0000 *	0.0000 *	0.0000 *
Triacosanes*	0.0000 *	0.0000 *	0.0000 *	0.0000 *	0.0000 *	0.0000 *
Tetracosanes*	0.0000 *	0.0000 *	0.0000 *	0.0000 *	0.0000 *	0.0000 *
Pentacosanes*	0.0000 *	0.0000 *	0.0000 *	0.0000 *	0.0000 *	0.0000 *
Hexacosanes*	0.0000 *	0.0000 *	0.0000 *	0.0000 *	0.0000 *	0.0000 *
Heptacosanes*	0.0000 *	0.0000 *	0.0000 *	0.0000 *	0.0000 *	0.0000 *
Octacosanes*	0.0000 *	0.0000 *	0.0000 *	0.0000 *	0.0000 *	0.0000 *
Nonacosanes*	0.0000 *	0.0000 *	0.0000 *	0.0000 *	0.0000 *	0.0000 *
Triacontanes*	0.0000 *	0.0000 *	0.0000 *	0.0000 *	0.0000 *	0.0000 *
C31+*	0.0000 *	0.0000 *	0.0000 *	0.0000 *	0.0000 *	0.0000 *
H2O	0.0000 *	0.0000 *	0.0000 *	0.0000 *	0.0000 *	0.0000 *
DTRM-G	0.0000 *	0.0000 *	0.0000 *	0.0000 *	0.0000 *	0.0000 *
decanes+ (SS)*	0.0000 *	0.0000 *	0.0000 *	0.0000 *	0.0000 *	0.0000 *
heptanes+ (464H)*	0.0000 *	0.0000 *	0.0000 *	0.0000 *	0.0000 *	0.0000 *
hept + (474Y)*	0.0000 *	0.0000 *	0.0000 *	0.0000 *	0.0000 *	0.0000 *
Total	153.1310	1.0000	3396.8606	1.0000	650.7977	1.0000

Vapour Phase

Phase Fraction 1.000

COMPONENTS	MOLAR FLOW (lbmole/hr)	MOLE FRACTION	MASS FLOW (lb/hr)	MASS FRACTION	LIQUID VOLUME FLOW (barrel/day)	LIQUID VOLUME FRACTION
Oxygen	0.0000	0.0000	0.0000	0.0000	0.0000	0.0000
H2S	0.0000	0.0000	0.0000	0.0000	0.0000	0.0000
Nitrogen	2.6461	0.0173	74.1251	0.0218	6.2943	0.0097
CO2	0.2741	0.0018	12.0632	0.0036	1.0008	0.0015

Licensed to: EXXONMOBIL TECHNICAL COM
* Specified by user.

Material Stream: GAS- JRU 157H (continued)

Fluid Package: Basis-2
Property Package: Peng-Robinson

COMPOSITION

Vapour Phase (continued)

Phase Fraction 1.000

COMPONENTS	MOLAR FLOW (lbmole/hr)	MOLE FRACTION	MASS FLOW (lb/hr)	MASS FRACTION	LIQUID VOLUME FLOW (barrel/day)	LIQUID VOLUME FRACTION
Methane	111.9186	0.7309	1795.4991	0.5286	410.6392	0.6310
Ethane	21.7997	0.1424	655.5143	0.1930	126.1936	0.1939
Propane	10.4129	0.0680	459.1770	0.1352	62.0535	0.0953
i-Butane	1.2296	0.0080	71.4716	0.0210	8.7085	0.0134
n-Butane	2.7334	0.0178	158.8751	0.0468	18.6526	0.0287
22-Mpropane	0.0061	0.0000	0.4419	0.0001	0.0508	0.0001
i-Pentane	0.5712	0.0037	41.2110	0.0121	4.5262	0.0070
n-Pentane	0.5758	0.0038	41.5425	0.0122	4.5171	0.0069
22-Mbutane	0.0061	0.0000	0.5279	0.0002	0.0554	0.0001
Cyclopentane	0.0000	0.0000	0.0000	0.0000	0.0000	0.0000
23-Mbutane	0.0475	0.0003	4.0909	0.0012	0.4211	0.0006
2-Mpentane	0.1103	0.0007	9.5015	0.0028	0.9910	0.0015
3-Mpentane	0.0582	0.0004	5.0147	0.0015	0.5143	0.0008
n-Hexane	0.1256	0.0008	10.8211	0.0032	1.1181	0.0017
Hexanes*	0.0000	0.0000	0.0000	0.0000	0.0000	0.0000
Mcyclopentan	0.0766	0.0005	6.4439	0.0019	0.5867	0.0009
Benzene	0.0781	0.0005	6.1001	0.0018	0.4735	0.0007
Cyclohexane	0.1363	0.0009	11.4699	0.0034	1.0045	0.0015
2-Mhexane	0.0153	0.0001	1.5344	0.0005	0.1542	0.0002
3-Mhexane	0.0168	0.0001	1.6879	0.0005	0.1675	0.0003
224-Mpentane	0.0000	0.0000	0.0000	0.0000	0.0000	0.0000
n-Heptane	0.0322	0.0002	3.2223	0.0009	0.3213	0.0005
Heptanes*	0.0490	0.0003	4.7042	0.0014	0.4440	0.0007
Mcyclohexane	0.0812	0.0005	7.9689	0.0023	0.7064	0.0011
Toluene	0.0413	0.0003	3.8096	0.0011	0.2998	0.0005
n-Octane	0.0107	0.0001	1.2245	0.0004	0.1189	0.0002
Octanes*	0.0429	0.0003	4.5878	0.0014	0.4203	0.0006
E-Benzene	0.0031	0.0000	0.3251	0.0001	0.0256	0.0000
m-Xylene	0.0061	0.0000	0.6503	0.0002	0.0514	0.0001
o-Xylene	0.0015	0.0000	0.1626	0.0000	0.0126	0.0000
p-Xylene	0.0000	0.0000	0.0016	0.0000	0.0001	0.0000
Nonanes*	0.0184	0.0001	2.2235	0.0007	0.1986	0.0003
Decanes*	0.0061	0.0000	0.8208	0.0002	0.0720	0.0001
Undecanes*	0.0002	0.0000	0.0315	0.0000	0.0027	0.0000
Dodecanes*	0.0001	0.0000	0.0148	0.0000	0.0013	0.0000
Triadecanes*	0.0000	0.0000	0.0000	0.0000	0.0000	0.0000
Tetradecanes*	0.0000	0.0000	0.0000	0.0000	0.0000	0.0000
Pentadecanes*	0.0000	0.0000	0.0000	0.0000	0.0000	0.0000
Hexadecanes*	0.0000	0.0000	0.0000	0.0000	0.0000	0.0000
Heptadecanes*	0.0000	0.0000	0.0000	0.0000	0.0000	0.0000
Octadecanes*	0.0000	0.0000	0.0000	0.0000	0.0000	0.0000
Nonadecanes*	0.0000	0.0000	0.0000	0.0000	0.0000	0.0000
eicosanes*	0.0000	0.0000	0.0000	0.0000	0.0000	0.0000
Heneicosanes*	0.0000	0.0000	0.0000	0.0000	0.0000	0.0000
Dodocosanes*	0.0000	0.0000	0.0000	0.0000	0.0000	0.0000
Triacosanes*	0.0000	0.0000	0.0000	0.0000	0.0000	0.0000
Tetracosanes*	0.0000	0.0000	0.0000	0.0000	0.0000	0.0000
Pentacosanes*	0.0000	0.0000	0.0000	0.0000	0.0000	0.0000

* Specified by user.

Material Stream: GAS- JRU 157H (continued)

Fluid Package: Basis-2
Property Package: Peng-Robinson

COMPOSITION

Vapour Phase (continued)

Phase Fraction 1.000

COMPONENTS	MOLAR FLOW (lbmole/hr)	MOLE FRACTION	MASS FLOW (lb/hr)	MASS FRACTION	LIQUID VOLUME FLOW (barrel/day)	LIQUID VOLUME FRACTION
Hexacosanes*	0.0000	0.0000	0.0000	0.0000	0.0000	0.0000
Heptacosanes*	0.0000	0.0000	0.0000	0.0000	0.0000	0.0000
Octacosanes*	0.0000	0.0000	0.0000	0.0000	0.0000	0.0000
Nonacosanes*	0.0000	0.0000	0.0000	0.0000	0.0000	0.0000
Triacontanes*	0.0000	0.0000	0.0000	0.0000	0.0000	0.0000
C31+*	0.0000	0.0000	0.0000	0.0000	0.0000	0.0000
H2O	0.0000	0.0000	0.0000	0.0000	0.0000	0.0000
DTRM-G	0.0000	0.0000	0.0000	0.0000	0.0000	0.0000
decanes+ (SS)*	0.0000	0.0000	0.0000	0.0000	0.0000	0.0000
heptanes+ (464H)*	0.0000	0.0000	0.0000	0.0000	0.0000	0.0000
hept + (474Y)*	0.0000	0.0000	0.0000	0.0000	0.0000	0.0000
Total	153.1310	1.0000	3396.8606	1.0000	650.7977	1.0000

Licensed to: EXXONMOBIL TECHNICAL COM
* Specified by user.

XTO Tank Battery

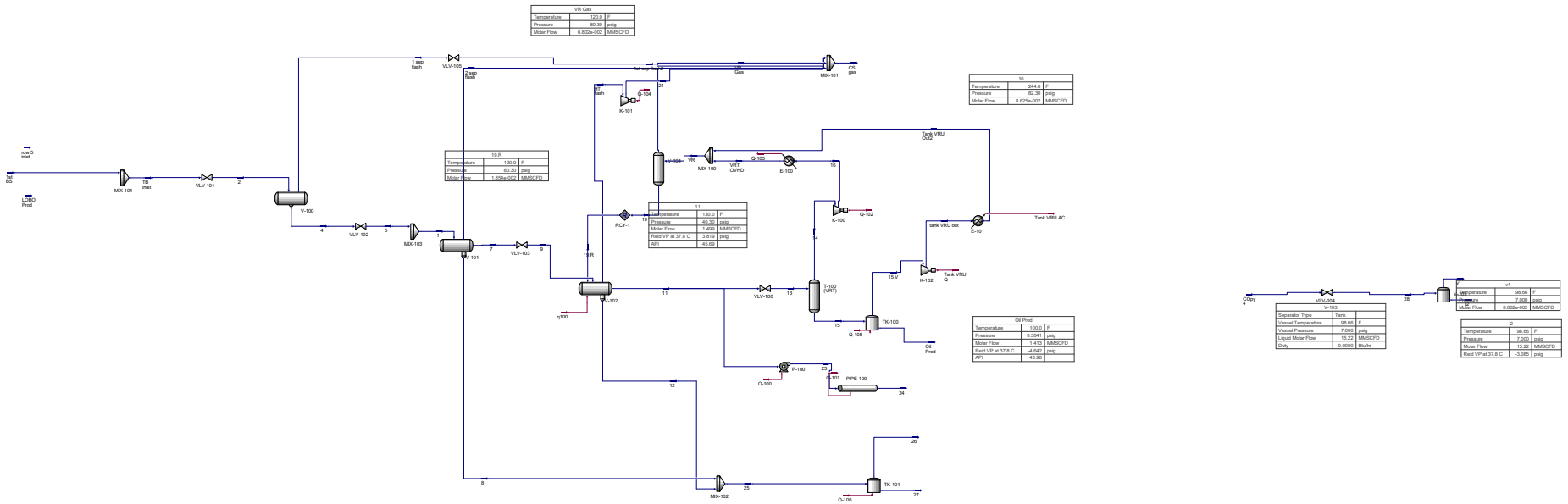

XTO Compressor Station

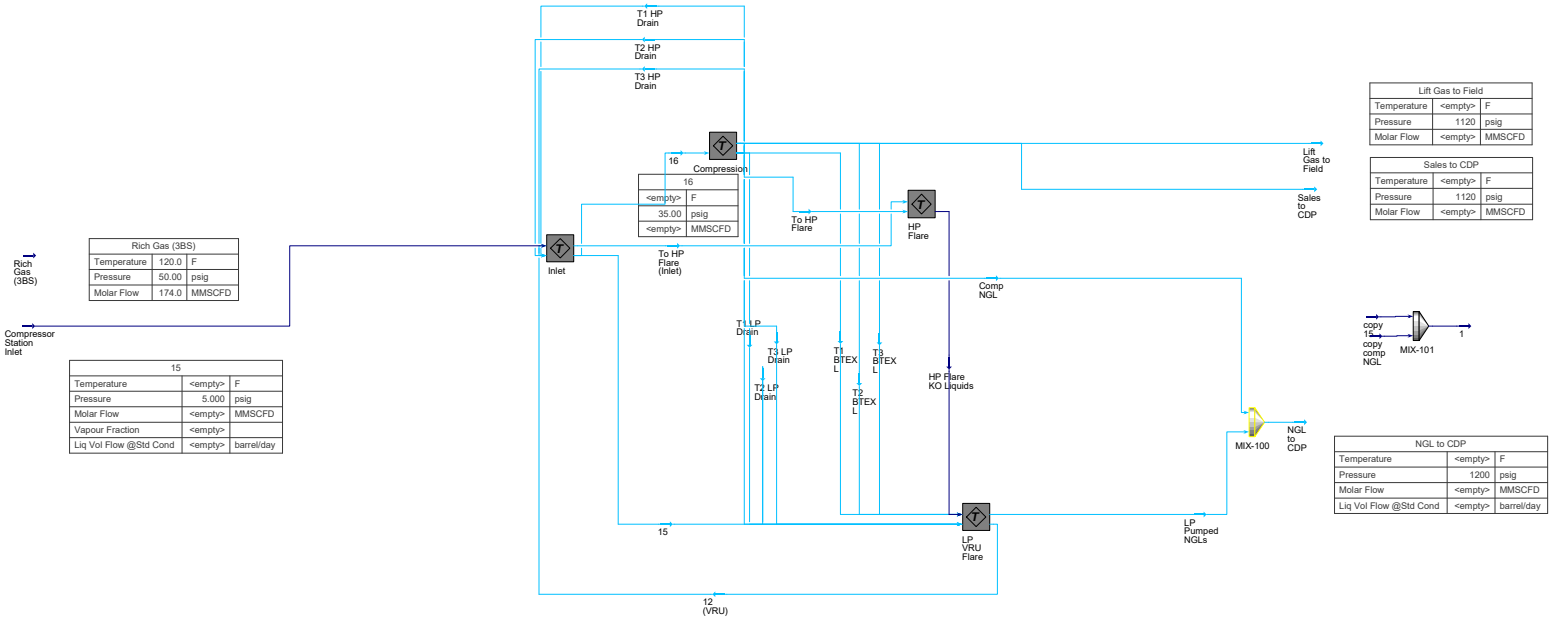

Rich Gas (3BS)		
Temperature	120.0	F
Pressure	50.00	psig
Molar Flow	174.0	MMSCFD

16		
<empty>	<empty>	F
35.00		psig
<empty>		MMSCFD

15		
Temperature	<empty>	F
Pressure	5.000	psig
Molar Flow	<empty>	MMSCFD
Vapour Fraction	<empty>	
Liq Vol Flow @Std Cond	<empty>	barrel/day

Lift Gas to Field		
Temperature	<empty>	F
Pressure	1120	psig
Molar Flow	<empty>	MMSCFD

Sales to CDP		
Temperature	<empty>	F
Pressure	1120	psig
Molar Flow	<empty>	MMSCFD

NGL to CDP		
Temperature	<empty>	F
Pressure	1200	psig
Molar Flow	<empty>	MMSCFD
Liq Vol Flow @Std Cond	<empty>	barrel/day

Husky CDP - Main Flowsheet

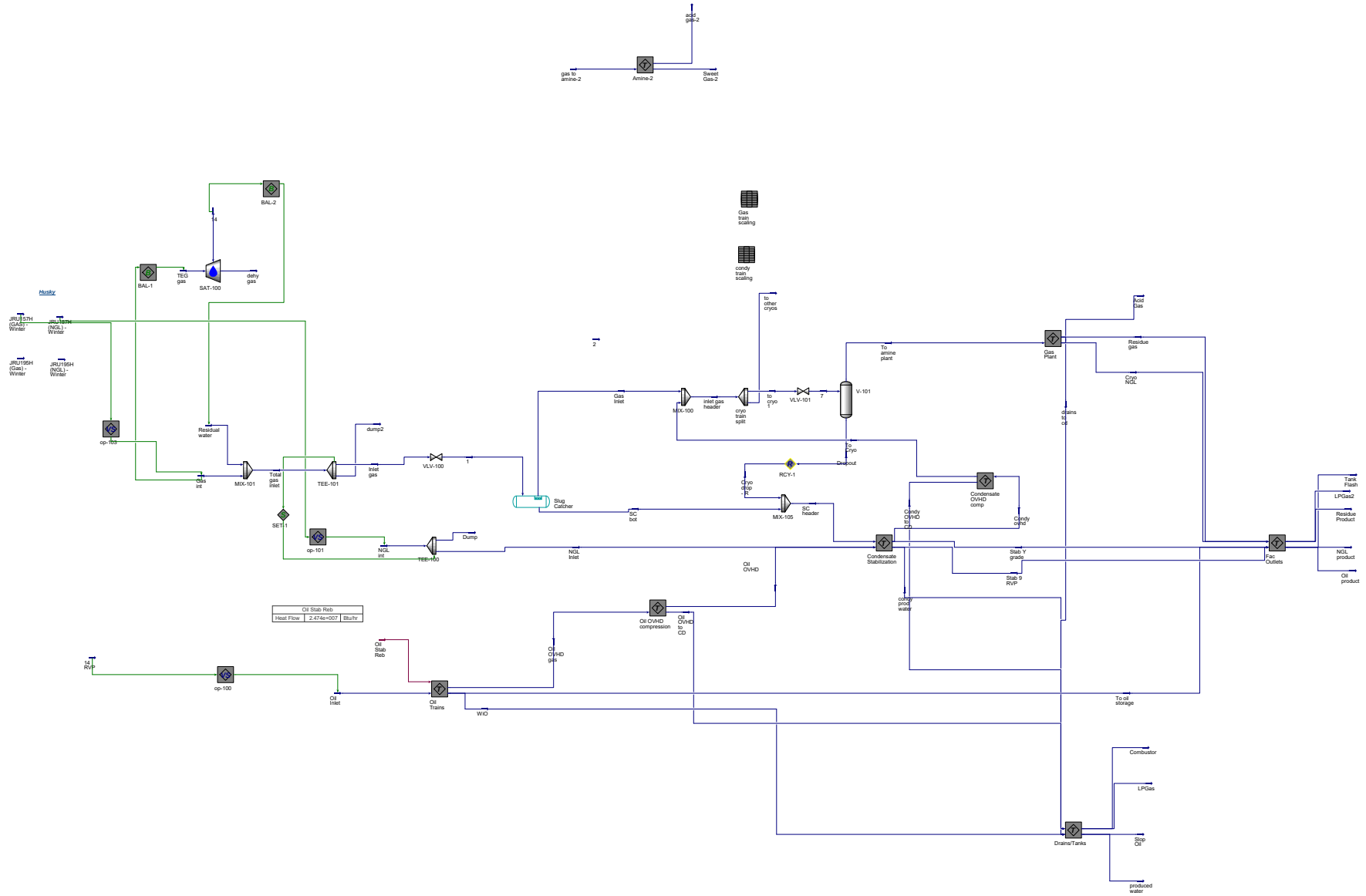

Husky CDP - Gunbarrel, Produced Water & Slop Oil

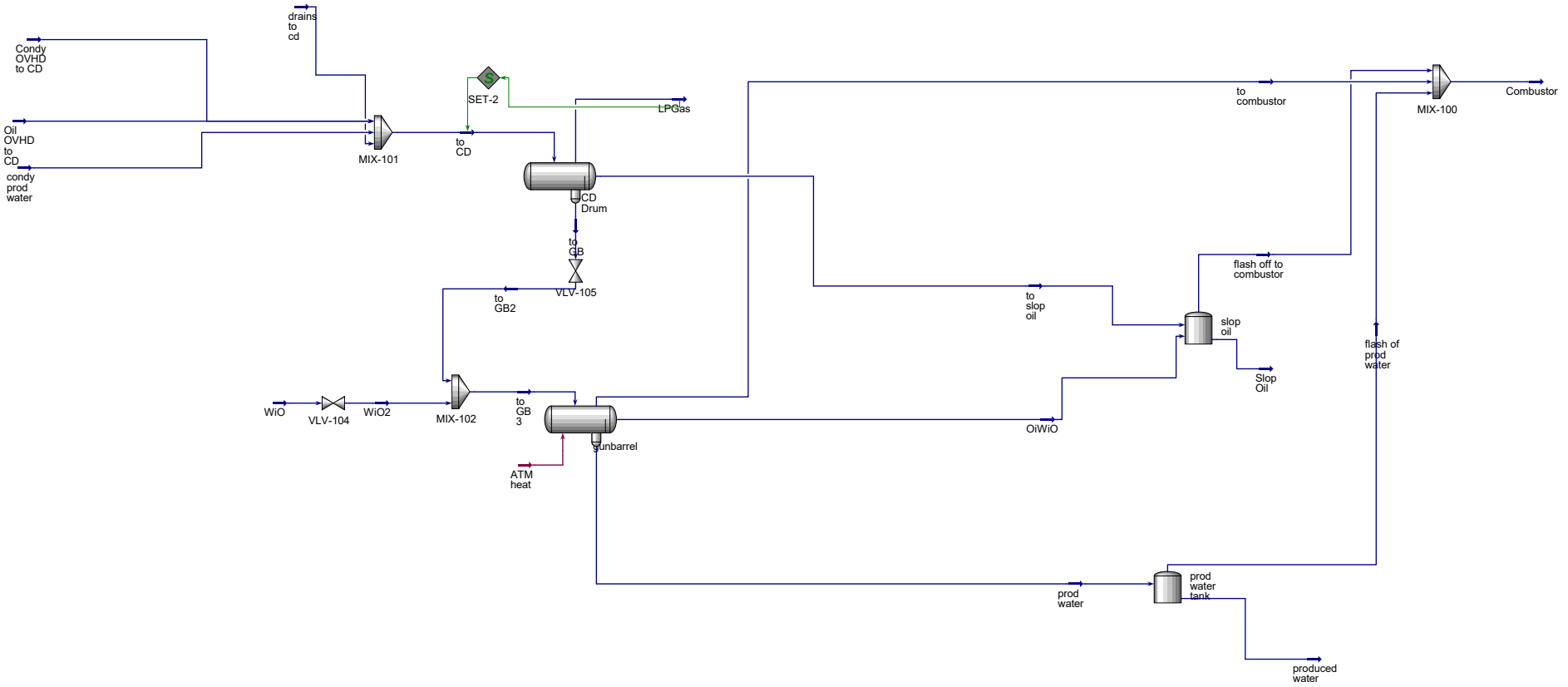

Husky CDP - Inlet Surge Vessel to Stabilization

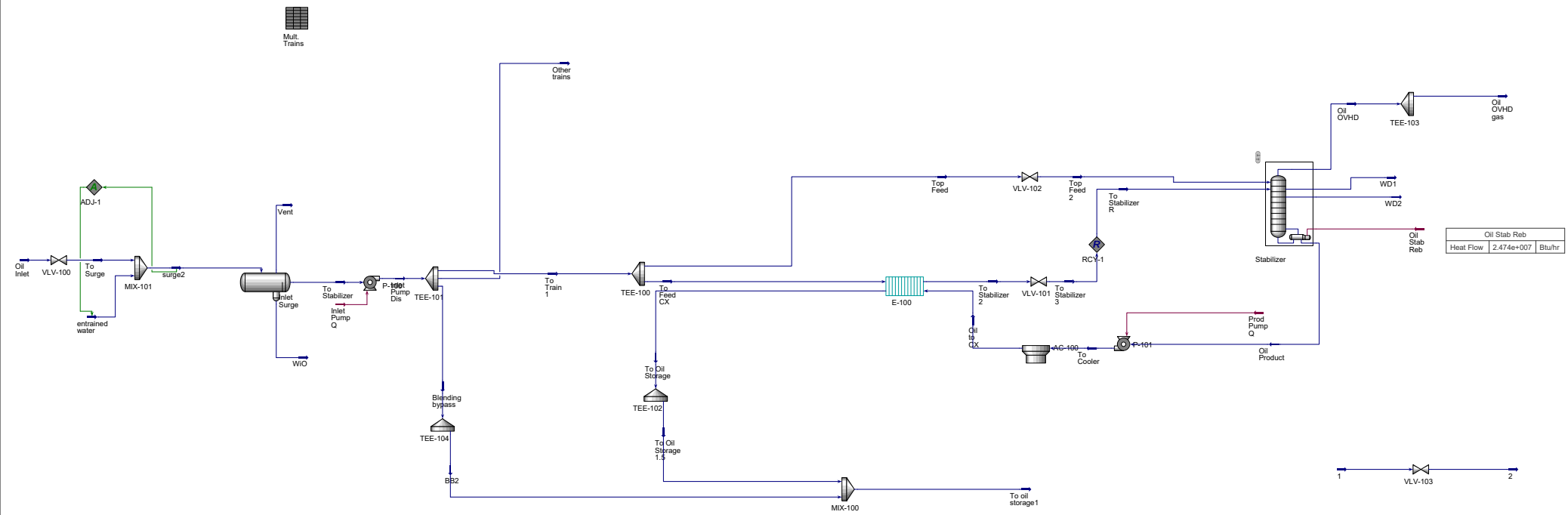

Husky CDP - Oil and NGL Storage

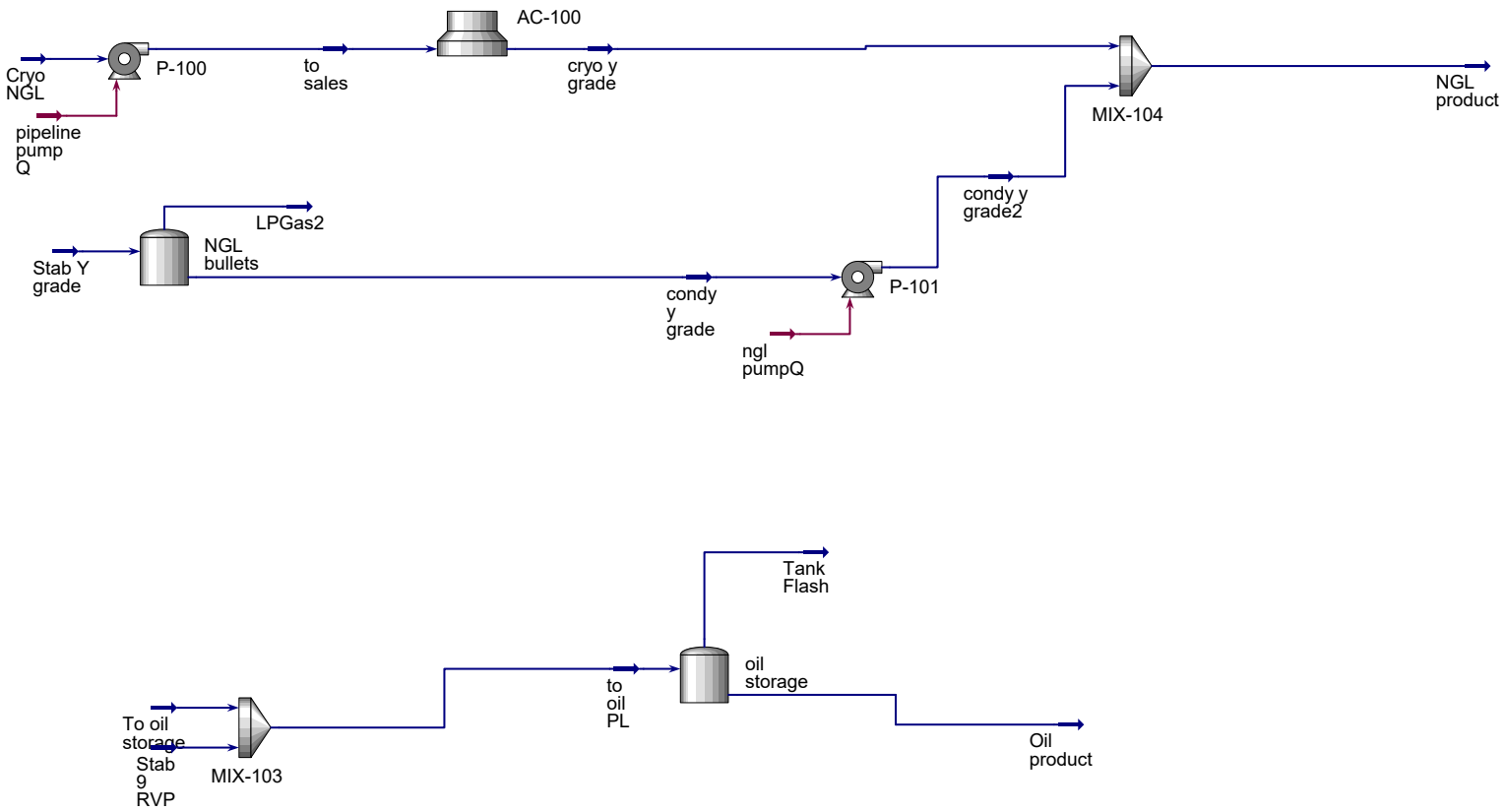

Husky CDP - CRYO Train

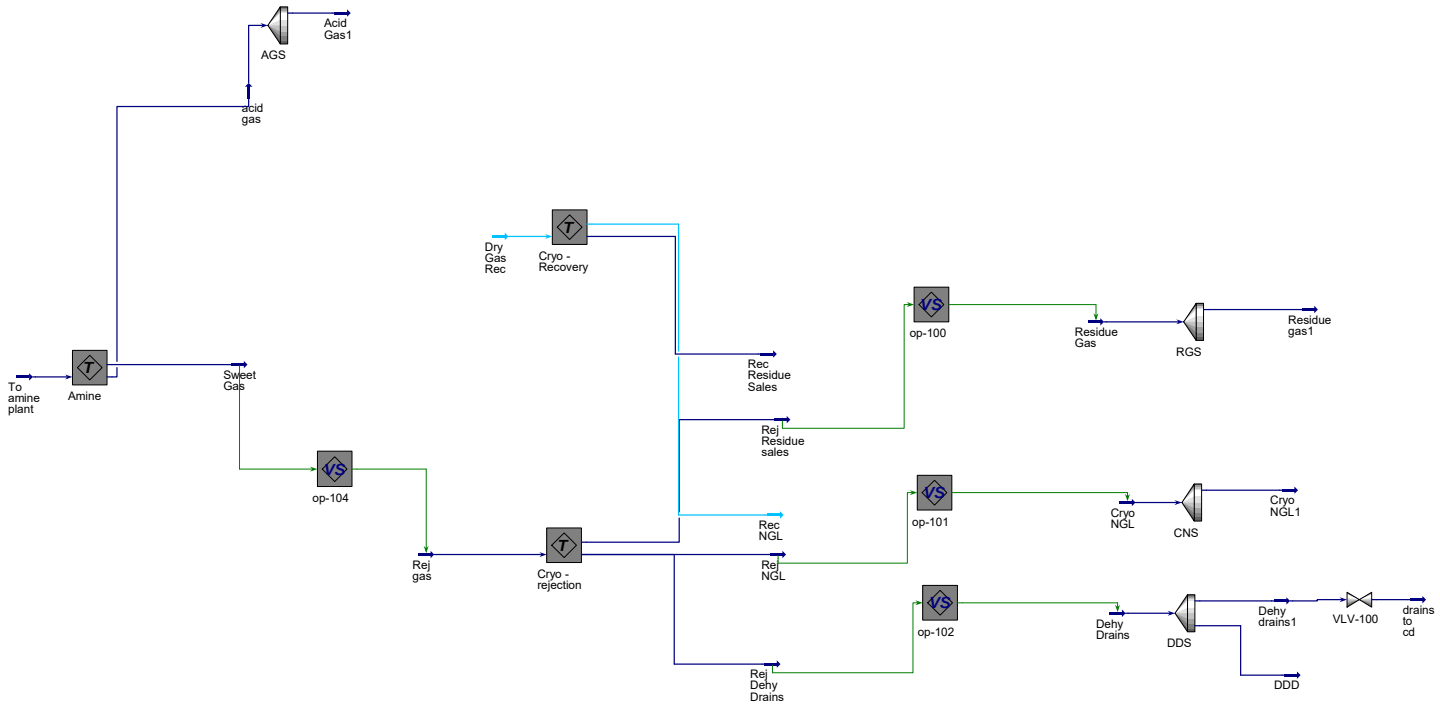

Husky CDP - Stabilization

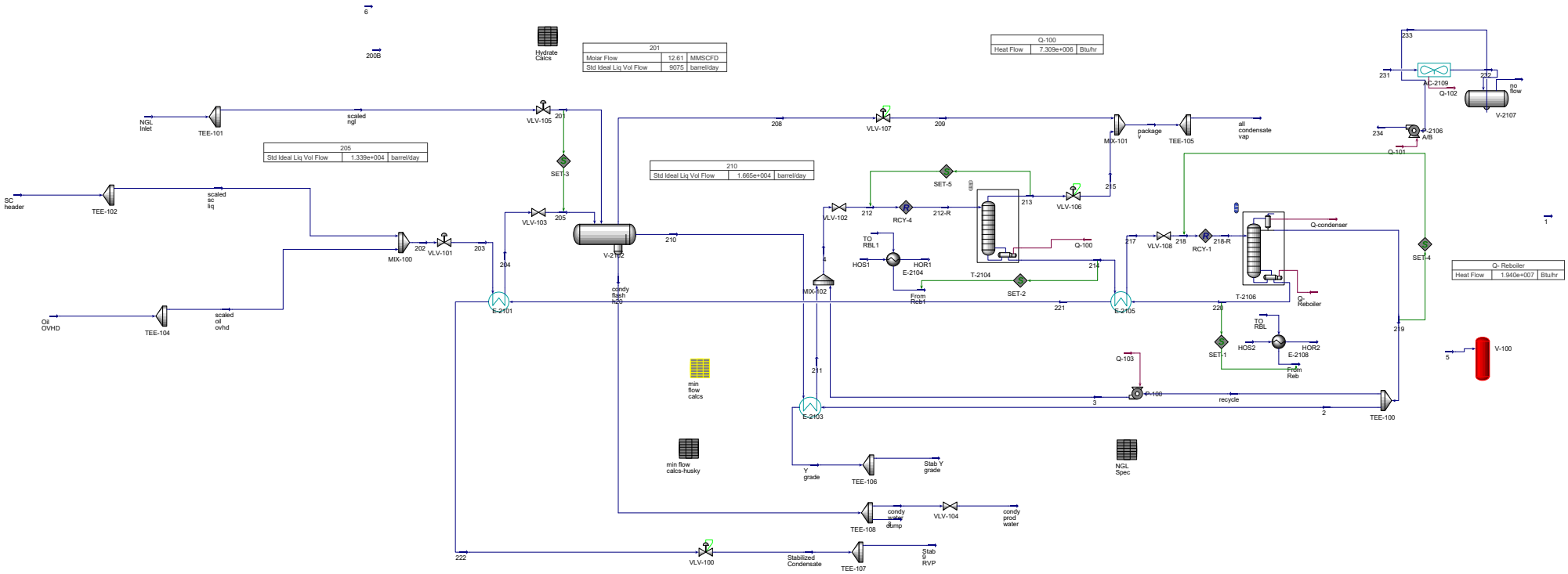

Material Stream: to slop oil

Fluid Package: Peng Robinson
Property Package: Peng-Robinson

CONDITIONS

	Overall	Liquid Phase
Vapour / Phase Fraction	0.0000	1.0000
Temperature: (F)	108.2	108.2
Pressure: (psig)	30.00	30.00
Molar Flow (MMSCFD)	7.069e-003	7.069e-003
Mass Flow (lb/hr)	63.83	63.83
Std Ideal Liq Vol Flow (barrel/day)	6.381	6.381
Molar Enthalpy (Btu/lbmole)	-6.868e+004	-6.868e+004
Molar Entropy (Btu/lbmole-F)	10.60	10.60
Heat Flow (Btu/hr)	-5.331e+004	-5.331e+004
Liq Vol Flow @Std Cond (barrel/day)	6.276 *	6.276

PROPERTIES

	Overall	Liquid Phase
Molecular Weight	82.23	82.23
Molar Density (lbmole/ft3)	0.5084	0.5084
Mass Density (lb/ft3)	41.80	41.80
Act. Volume Flow (barrel/day)	6.527	6.527
Mass Enthalpy (Btu/lb)	-835.2	-835.2
Mass Entropy (Btu/lb-F)	0.1289	0.1289
Heat Capacity (Btu/lbmole-F)	41.87	41.87
Mass Heat Capacity (Btu/lb-F)	0.5092	0.5092
LHV Molar Basis (Std) (Btu/SCF)	---	---
LHV Mass Basis (Std) (Btu/lb)	---	---
Phase Fraction [Vol. Basis]	0.0000	1.000
Phase Fraction [Mass Basis]	0.0000	1.000
Partial Pressure of CO2 (psig)	-14.70	---
Cost Based on Flow (Cost/s)	0.0000	0.0000
Act. Gas Flow (ACFM)	---	---
Avg. Liq. Density (lbmole/ft3)	0.5200	0.5200
Specific Heat (Btu/lbmole-F)	41.87	41.87
Std. Gas Flow (MMSCFD)	7.055e-003	7.055e-003
Std. Ideal Liq. Mass Density (lb/ft3)	42.76	42.76
Act. Liq. Flow (USGPM)	0.1904	0.1904
Z Factor	1.443e-002	1.443e-002
Watson K	12.31	12.31
User Property	---	---
Cp/(Cp - R)	1.050	1.050
Cp/Cv	1.050	1.050
Heat of Vap. (Btu/lbmole)	1.893e+004	---
Kinematic Viscosity (cSt)	0.4486	0.4486
Liq. Mass Density (Std. Cond) (lb/ft3)	43.48	43.48
Liq. Vol. Flow (Std. Cond) (barrel/day)	6.276	6.276
Liquid Fraction	1.000	1.000
Molar Volume (ft3/lbmole)	1.967	1.967
Mass Heat of Vap. (Btu/lb)	230.2	---
Phase Fraction [Molar Basis]	0.0000	1.0000
Surface Tension (dyne/cm)	15.86	15.86
Thermal Conductivity (Btu/hr-ft-F)	6.147e-002	6.147e-002
Viscosity (cP)	0.3004	0.3004
Cv (Semi-Ideal) (Btu/lbmole-F)	39.89	39.89
Mass Cv (Semi-Ideal) (Btu/lb-F)	0.4850	0.4850

Licensed to: EXXONMOBIL TECHNICAL COM
* Specified by user.

Material Stream: to slop oil (continued)

Fluid Package: Peng Robinson
Property Package: Peng-Robinson

PROPERTIES

		Overall	Liquid Phase			
Cv	(Btu/lbmole-F)	39.89	39.89			
Mass Cv	(Btu/lb-F)	0.4850	0.4850			
Cv (Ent. Method)	(Btu/lbmole-F)	---	---			
Mass Cv (Ent. Method)	(Btu/lb-F)	---	---			
Cp/Cv (Ent. Method)		---	---			
Liq. Vol. Flow - Sum(Std. Cond)	(barrel/day)	6.276	6.276			
Partial Pressure of H2S	(psig)	-14.70	---			
Reid VP at 37.8 C	(psig)	18.42	18.42			
True VP at 37.8 C	(psig)	25.55	25.55			
Viscosity Index		-10.90	---			
HHV Molar Basis (Std)	(Btu/SCF)	---	---			
HHV Mass Basis (Std)	(Btu/lb)	---	---			
CO2 Loading		---	---			
CO2 App ML Con	(lbmole/ft3)	8.834e-006	8.834e-006			
CO2 App WT Con	(lbmol/lb)	2.113e-007	2.113e-007			
Phase Fraction [Act. Vol. Basis]		0.0000	1.000			
Mass Exergy	(Btu/lb)	1.309	---			
Ideal Gas Cp/Cv		1.067	1.067			
Ideal Gas Cp	(Btu/lbmole-F)	31.59	31.59			
Mass Ideal Gas Cp	(Btu/lb-F)	0.3841	0.3841			
Bubble Point Pressure	(psig)	30.00	---			

COMPOSITION

Overall Phase

Vapour Fraction 0.0000

COMPONENTS	MOLAR FLOW (lbmole/hr)	MOLE FRACTION	MASS FLOW (lb/hr)	MASS FRACTION	LIQUID VOLUME FLOW (barrel/day)	LIQUID VOLUME FRACTION
Oxygen	0.0000	0.0000	0.0000	0.0000	0.0000	0.0000
H2S	0.0000	0.0000	0.0000	0.0000	0.0000	0.0000
Nitrogen	0.0000	0.0000	0.0001	0.0000	0.0000	0.0000
CO2	0.0000	0.0000	0.0006	0.0000	0.0000	0.0000
Methane	0.0003	0.0004	0.0046	0.0001	0.0011	0.0002
Ethane	0.0048	0.0061	0.1434	0.0022	0.0276	0.0043
Propane	0.0912	0.1175	4.0224	0.0630	0.5436	0.0852
i-Butane	0.0352	0.0453	2.0441	0.0320	0.2491	0.0390
n-Butane	0.0948	0.1221	5.5093	0.0863	0.6468	0.1014
22-Mpropane	0.0009	0.0012	0.0648	0.0010	0.0075	0.0012
i-Pentane	0.0416	0.0536	3.0033	0.0471	0.3299	0.0517
n-Pentane	0.0540	0.0695	3.8944	0.0610	0.4235	0.0664
22-Mbutane	0.0005	0.0007	0.0465	0.0007	0.0049	0.0008
Cyclopentane	0.0000	0.0000	0.0000	0.0000	0.0000	0.0000
23-Mbutane	0.0072	0.0092	0.6163	0.0097	0.0634	0.0099
2-Mpentane	0.0194	0.0250	1.6746	0.0262	0.1747	0.0274
3-Mpentane	0.0117	0.0150	1.0043	0.0157	0.1030	0.0161
n-Hexane	0.0299	0.0386	2.5807	0.0404	0.2667	0.0418
Hexanes*	0.0000	0.0000	0.0000	0.0000	0.0000	0.0000
Mcyclopentan	0.0254	0.0327	2.1382	0.0335	0.1947	0.0305
Benzene	0.0264	0.0341	2.0659	0.0324	0.1604	0.0251
Cyclohexane	0.0574	0.0739	4.8279	0.0756	0.4228	0.0663
2-Mhexane	0.0091	0.0117	0.9115	0.0143	0.0916	0.0144
3-Mhexane	0.0083	0.0107	0.8349	0.0131	0.0828	0.0130

* Specified by user.

Material Stream: to slop oil (continued)

Fluid Package: Peng Robinson
Property Package: Peng-Robinson

COMPOSITION

Overall Phase (continued)

Vapour Fraction 0.0000

COMPONENTS	MOLAR FLOW (lbmole/hr)	MOLE FRACTION	MASS FLOW (lb/hr)	MASS FRACTION	LIQUID VOLUME FLOW (barrel/day)	LIQUID VOLUME FRACTION
224-Mpentane	0.0000	0.0000	0.0000	0.0000	0.0000	0.0000
n-Heptane	0.0355	0.0457	3.5555	0.0557	0.3545	0.0556
Heptanes*	0.0012	0.0015	0.1120	0.0018	0.0106	0.0017
Mcyclohexane	0.0590	0.0760	5.7917	0.0907	0.5134	0.0805
Toluene	0.0347	0.0447	3.1989	0.0501	0.2518	0.0395
n-Octane	0.0484	0.0624	5.5287	0.0866	0.5367	0.0841
Octanes*	0.0016	0.0021	0.1729	0.0027	0.0158	0.0025
E-Benzene	0.0015	0.0019	0.1565	0.0025	0.0123	0.0019
m-Xylene	0.0061	0.0079	0.6475	0.0101	0.0511	0.0080
o-Xylene	0.0034	0.0044	0.3590	0.0056	0.0278	0.0044
p-Xylene	0.0061	0.0078	0.6460	0.0101	0.0512	0.0080
Nonanes*	0.0007	0.0009	0.0888	0.0014	0.0079	0.0012
Decanes*	0.0003	0.0004	0.0382	0.0006	0.0034	0.0005
Undecanes_3*	0.0089	0.0114	1.3046	0.0204	0.1128	0.0177
Dodecanes_3*	0.0029	0.0038	0.4696	0.0074	0.0400	0.0063
Triadecanes_3*	0.0013	0.0016	0.2234	0.0035	0.0188	0.0029
Tetradecanes_3*	0.0004	0.0005	0.0756	0.0012	0.0063	0.0010
Pentadecanes_3*	0.0001	0.0002	0.0247	0.0004	0.0020	0.0003
Hexadecanes_3*	0.0000	0.0000	0.0067	0.0001	0.0005	0.0001
Heptadecanes_3*	0.0000	0.0000	0.0022	0.0000	0.0002	0.0000
Octadecanes_3*	0.0000	0.0000	0.0009	0.0000	0.0001	0.0000
Nonadecanes_3*	0.0000	0.0000	0.0004	0.0000	0.0000	0.0000
eicosanes_3*	0.0000	0.0000	0.0001	0.0000	0.0000	0.0000
Heneicosanes_3*	0.0000	0.0000	0.0000	0.0000	0.0000	0.0000
Dodocosanes_3*	0.0000	0.0000	0.0000	0.0000	0.0000	0.0000
Triacosanes_3*	0.0000	0.0000	0.0000	0.0000	0.0000	0.0000
Tetracosanes_3*	0.0000	0.0000	0.0000	0.0000	0.0000	0.0000
Pentacosanes_3*	0.0000	0.0000	0.0000	0.0000	0.0000	0.0000
Hexacosanes_3*	0.0000	0.0000	0.0000	0.0000	0.0000	0.0000
Heptacosanes_3*	0.0000	0.0000	0.0000	0.0000	0.0000	0.0000
Octacosanes_3*	0.0000	0.0000	0.0000	0.0000	0.0000	0.0000
Nonacosanes_3*	0.0000	0.0000	0.0000	0.0000	0.0000	0.0000
Triacontanes*	0.0000	0.0000	0.0000	0.0000	0.0000	0.0000
C31+_2*	0.0000	0.0000	0.0000	0.0000	0.0000	0.0000
H2O	0.0008	0.0010	0.0145	0.0002	0.0010	0.0002
DTRM-G	0.0000	0.0000	0.0000	0.0000	0.0000	0.0000
NC30*	0.0000	0.0000	0.0000	0.0000	0.0000	0.0000
n-Nonane	0.0291	0.0376	3.7384	0.0586	0.3554	0.0557
n-Decane	0.0160	0.0207	2.2831	0.0358	0.2134	0.0334
NC31-35*	0.0000	0.0000	0.0000	0.0000	0.0000	0.0000
TexaTherm	0.0000	0.0000	0.0000	0.0000	0.0000	0.0000
NC31-35_1*	0.0000	0.0000	0.0000	0.0000	0.0000	0.0000
CO	0.0000	0.0000	0.0000	0.0000	0.0000	0.0000
Total	0.7762	1.0000	63.8276	1.0000	6.3809	1.0000

* Specified by user.

Material Stream: to slop oil (continued)

Fluid Package: Peng Robinson
Property Package: Peng-Robinson

COMPOSITION

Liquid Phase

Phase Fraction 1.000

COMPONENTS	MOLAR FLOW (lbmole/hr)	MOLE FRACTION	MASS FLOW (lb/hr)	MASS FRACTION	LIQUID VOLUME FLOW (barrel/day)	LIQUID VOLUME FRACTION
Oxygen	0.0000	0.0000	0.0000	0.0000	0.0000	0.0000
H2S	0.0000	0.0000	0.0000	0.0000	0.0000	0.0000
Nitrogen	0.0000	0.0000	0.0001	0.0000	0.0000	0.0000
CO2	0.0000	0.0000	0.0006	0.0000	0.0000	0.0000
Methane	0.0003	0.0004	0.0046	0.0001	0.0011	0.0002
Ethane	0.0048	0.0061	0.1434	0.0022	0.0276	0.0043
Propane	0.0912	0.1175	4.0224	0.0630	0.5436	0.0852
i-Butane	0.0352	0.0453	2.0441	0.0320	0.2491	0.0390
n-Butane	0.0948	0.1221	5.5093	0.0863	0.6468	0.1014
22-Mpropane	0.0009	0.0012	0.0648	0.0010	0.0075	0.0012
i-Pentane	0.0416	0.0536	3.0033	0.0471	0.3299	0.0517
n-Pentane	0.0540	0.0695	3.8944	0.0610	0.4235	0.0664
22-Mbutane	0.0005	0.0007	0.0465	0.0007	0.0049	0.0008
Cyclopentane	0.0000	0.0000	0.0000	0.0000	0.0000	0.0000
23-Mbutane	0.0072	0.0092	0.6163	0.0097	0.0634	0.0099
2-Mpentane	0.0194	0.0250	1.6746	0.0262	0.1747	0.0274
3-Mpentane	0.0117	0.0150	1.0043	0.0157	0.1030	0.0161
n-Hexane	0.0299	0.0386	2.5807	0.0404	0.2667	0.0418
Hexanes*	0.0000	0.0000	0.0000	0.0000	0.0000	0.0000
Mcyclopentan	0.0254	0.0327	2.1382	0.0335	0.1947	0.0305
Benzene	0.0264	0.0341	2.0659	0.0324	0.1604	0.0251
Cyclohexane	0.0574	0.0739	4.8279	0.0756	0.4228	0.0663
2-Mhexane	0.0091	0.0117	0.9115	0.0143	0.0916	0.0144
3-Mhexane	0.0083	0.0107	0.8349	0.0131	0.0828	0.0130
224-Mpentane	0.0000	0.0000	0.0000	0.0000	0.0000	0.0000
n-Heptane	0.0355	0.0457	3.5555	0.0557	0.3545	0.0556
Heptanes*	0.0012	0.0015	0.1120	0.0018	0.0106	0.0017
Mcyclohexane	0.0590	0.0760	5.7917	0.0907	0.5134	0.0805
Toluene	0.0347	0.0447	3.1989	0.0501	0.2518	0.0395
n-Octane	0.0484	0.0624	5.5287	0.0866	0.5367	0.0841
Octanes*	0.0016	0.0021	0.1729	0.0027	0.0158	0.0025
E-Benzene	0.0015	0.0019	0.1565	0.0025	0.0123	0.0019
m-Xylene	0.0061	0.0079	0.6475	0.0101	0.0511	0.0080
o-Xylene	0.0034	0.0044	0.3590	0.0056	0.0278	0.0044
p-Xylene	0.0061	0.0078	0.6460	0.0101	0.0512	0.0080
Nonanes*	0.0007	0.0009	0.0888	0.0014	0.0079	0.0012
Decanes*	0.0003	0.0004	0.0382	0.0006	0.0034	0.0005
Undecanes_3*	0.0089	0.0114	1.3046	0.0204	0.1128	0.0177
Dodecanes_3*	0.0029	0.0038	0.4696	0.0074	0.0400	0.0063
Triadecanes_3*	0.0013	0.0016	0.2234	0.0035	0.0188	0.0029
Tetradecanes_3*	0.0004	0.0005	0.0756	0.0012	0.0063	0.0010
Pentadecanes_3*	0.0001	0.0002	0.0247	0.0004	0.0020	0.0003
Hexadecanes_3*	0.0000	0.0000	0.0067	0.0001	0.0005	0.0001
Heptadecanes_3*	0.0000	0.0000	0.0022	0.0000	0.0002	0.0000
Octadecanes_3*	0.0000	0.0000	0.0009	0.0000	0.0001	0.0000
Nonadecanes_3*	0.0000	0.0000	0.0004	0.0000	0.0000	0.0000
eicosanes_3*	0.0000	0.0000	0.0001	0.0000	0.0000	0.0000
Heneicosanes_3*	0.0000	0.0000	0.0000	0.0000	0.0000	0.0000

Licensed to: EXXONMOBIL TECHNICAL COM
* Specified by user.

Material Stream: to slop oil (continued)

Fluid Package: Peng Robinson
Property Package: Peng-Robinson

COMPOSITION

Liquid Phase (continued)

Phase Fraction 1.000

COMPONENTS	MOLAR FLOW (lbmole/hr)	MOLE FRACTION	MASS FLOW (lb/hr)	MASS FRACTION	LIQUID VOLUME FLOW (barrel/day)	LIQUID VOLUME FRACTION
Dodocosanes_3*	0.0000	0.0000	0.0000	0.0000	0.0000	0.0000
Triacosanes_3*	0.0000	0.0000	0.0000	0.0000	0.0000	0.0000
Tetracosanes_3*	0.0000	0.0000	0.0000	0.0000	0.0000	0.0000
Pentacosanes_3*	0.0000	0.0000	0.0000	0.0000	0.0000	0.0000
Hexacosanes_3*	0.0000	0.0000	0.0000	0.0000	0.0000	0.0000
Heptacosanes_3*	0.0000	0.0000	0.0000	0.0000	0.0000	0.0000
Octacosanes_3*	0.0000	0.0000	0.0000	0.0000	0.0000	0.0000
Nonacosanes_3*	0.0000	0.0000	0.0000	0.0000	0.0000	0.0000
Triacontanes*	0.0000	0.0000	0.0000	0.0000	0.0000	0.0000
C31+_2*	0.0000	0.0000	0.0000	0.0000	0.0000	0.0000
H2O	0.0008	0.0010	0.0145	0.0002	0.0010	0.0002
DTRM-G	0.0000	0.0000	0.0000	0.0000	0.0000	0.0000
NC30*	0.0000	0.0000	0.0000	0.0000	0.0000	0.0000
n-Nonane	0.0291	0.0376	3.7384	0.0586	0.3554	0.0557
n-Decane	0.0160	0.0207	2.2831	0.0358	0.2134	0.0334
NC31-35*	0.0000	0.0000	0.0000	0.0000	0.0000	0.0000
TexaTherm	0.0000	0.0000	0.0000	0.0000	0.0000	0.0000
NC31-35_1*	0.0000	0.0000	0.0000	0.0000	0.0000	0.0000
CO	0.0000	0.0000	0.0000	0.0000	0.0000	0.0000
Total	0.7762	1.0000	63.8276	1.0000	6.3809	1.0000

* Specified by user.

Material Stream: to GB2

Fluid Package: Peng Robinson
Property Package: Peng-Robinson

CONDITIONS

	Overall	Vapour Phase	Liquid Phase	Aqueous Phase
Vapour / Phase Fraction	0.0018	0.0018	0.0033	0.9949
Temperature: (F)	107.3	107.3	107.3	107.3
Pressure: (psig)	0.2500	0.2500	0.2500	0.2500
Molar Flow (MMSCFD)	0.8417	1.515e-003	2.810e-003	0.8374
Mass Flow (lb/hr)	1695	9.529	28.71	1657
Std Ideal Liq Vol Flow (barrel/day)	117.5	1.087	2.728	113.7
Molar Enthalpy (Btu/lbmole)	-1.222e+005	-5.607e+004	-7.245e+004	-1.225e+005
Molar Entropy (Btu/lbmole-F)	13.86	36.69	6.537	13.85
Heat Flow (Btu/hr)	-1.130e+007	-9328	-2.235e+004	-1.126e+007
Liq Vol Flow @Std Cond (barrel/day)	115.0 *	1.061	2.700	111.8

PROPERTIES

	Overall	Vapour Phase	Liquid Phase	Aqueous Phase
Molecular Weight	18.34	57.28	93.03	18.02
Molar Density (lbmole/ft3)	0.9888	2.515e-003	0.4719	3.446
Mass Density (lb/ft3)	18.13	0.1441	43.91	62.09
Act. Volume Flow (barrel/day)	399.6	282.7	2.795	114.0
Mass Enthalpy (Btu/lb)	-6665	-978.9	-778.7	-6799
Mass Entropy (Btu/lb-F)	0.7560	0.6406	7.026e-002	0.7686
Heat Capacity (Btu/lbmole-F)	18.67	23.49	45.59	18.57
Mass Heat Capacity (Btu/lb-F)	1.018	0.4100	0.4901	1.031
LHV Molar Basis (Std) (Btu/SCF)	---	---	---	2.838e-008
LHV Mass Basis (Std) (Btu/lb)	---	---	---	5.977e-007
Phase Fraction [Vol. Basis]	9.252e-003	9.252e-003	2.323e-002	0.9675
Phase Fraction [Mass Basis]	5.623e-003	5.623e-003	1.694e-002	0.9774
Partial Pressure of CO2 (psig)	-14.69	---	---	---
Cost Based on Flow (Cost/s)	0.0000	0.0000	0.0000	0.0000
Act. Gas Flow (ACFM)	1.102	1.102	---	---
Avg. Liq. Density (lbmole/ft3)	3.363	0.6544	0.4834	3.458
Specific Heat (Btu/lbmole-F)	18.67	23.49	45.59	18.57
Std. Gas Flow (MMSCFD)	0.8402	1.512e-003	2.805e-003	0.8358
Std. Ideal Liq. Mass Density (lb/ft3)	61.67	37.48	44.97	62.30
Act. Liq. Flow (USGPM)	3.408	---	8.151e-002	3.326
Z Factor	---	0.9766	5.205e-003	7.128e-004
Watson K	12.31	13.31	12.01	8.521
User Property	---	---	---	---
Cp/(Cp - R)	1.119	1.092	1.046	1.120
Cp/Cv	1.000	1.101	1.309	1.157
Heat of Vap. (Btu/lbmole)	2.099e+004	---	---	---
Kinematic Viscosity (cSt)	---	3.404	0.5497	0.6328
Liq. Mass Density (Std. Cond) (lb/ft3)	63.01	38.40	45.44	63.35
Liq. Vol. Flow (Std. Cond) (barrel/day)	115.0	1.061	2.700	111.8
Liquid Fraction	0.9982	0.0000	1.000	1.000
Molar Volume (ft3/lbmole)	1.011	397.6	2.119	0.2902
Mass Heat of Vap. (Btu/lb)	1145	---	---	---
Phase Fraction [Molar Basis]	0.0018	0.0018	0.0033	0.9949
Surface Tension (dyne/cm)	---	---	18.76	69.17
Thermal Conductivity (Btu/hr-ft-F)	---	9.771e-003	6.612e-002	0.3662
Viscosity (cP)	---	7.855e-003	0.3866	0.6294
Cv (Semi-Ideal) (Btu/lbmole-F)	16.69	21.50	43.61	16.59
Mass Cv (Semi-Ideal) (Btu/lb-F)	0.9100	0.3754	0.4687	0.9208

* Specified by user.

Material Stream: to GB2 (continued)

Fluid Package: Peng Robinson
Property Package: Peng-Robinson

PROPERTIES

		Overall	Vapour Phase	Liquid Phase	Aqueous Phase
Cv	(Btu/lbmole-F)	18.67	21.33	34.82	16.06
Mass Cv	(Btu/lb-F)	1.018	0.3725	0.3743	0.8914
Cv (Ent. Method)	(Btu/lbmole-F)	---	---	37.73	16.32
Mass Cv (Ent. Method)	(Btu/lb-F)	---	---	0.4055	0.9061
Cp/Cv (Ent. Method)		---	---	1.208	1.138
Liq. Vol. Flow - Sum(Std. Cond)	(barrel/day)	115.5	1.061	2.700	111.8
Partial Pressure of H2S	(psig)	-14.70	---	---	---
Reid VP at 37.8 C	(psig)	18.47	66.54	-3.497	-13.75
True VP at 37.8 C	(psig)	25.50	78.38	-1.406	-13.75
Viscosity Index		-2.745	---	---	---
HHV Molar Basis (Std)	(Btu/SCF)	---	---	---	46.46
HHV Mass Basis (Std)	(Btu/lb)	---	---	---	978.7
CO2 Loading		---	---	---	---
CO2 App ML Con	(lbmole/ft3)	5.927e-007	---	1.509e-006	3.309e-007
CO2 App WT Con	(lbmol/lb)	3.269e-008	---	3.436e-008	5.329e-009
Phase Fraction [Act. Vol. Basis]		0.7076	0.7076	6.994e-003	0.2854
Mass Exergy	(Btu/lb)	0.8579	---	---	---
Ideal Gas Cp/Cv		1.322	1.093	1.060	1.328
Ideal Gas Cp	(Btu/lbmole-F)	8.160	23.30	35.01	8.043
Mass Ideal Gas Cp	(Btu/lb-F)	0.4450	0.4068	0.3763	0.4465
Bubble Point Pressure	(psig)	29.46	---	---	---

COMPOSITION

Overall Phase

Vapour Fraction 0.0018

COMPONENTS	MOLAR FLOW (lbmole/hr)	MOLE FRACTION	MASS FLOW (lb/hr)	MASS FRACTION	LIQUID VOLUME FLOW (barrel/day)	LIQUID VOLUME FRACTION
Oxygen	0.0000	0.0000	0.0000	0.0000	0.0000	0.0000
H2S	0.0000	0.0000	0.0000	0.0000	0.0000	0.0000
Nitrogen	0.0000	0.0000	0.0001	0.0000	0.0000	0.0000
CO2	0.0001	0.0000	0.0024	0.0000	0.0002	0.0000
Methane	0.0002	0.0000	0.0027	0.0000	0.0006	0.0000
Ethane	0.0028	0.0000	0.0854	0.0001	0.0164	0.0001
Propane	0.0543	0.0006	2.3950	0.0014	0.3237	0.0028
i-Butane	0.0209	0.0002	1.2171	0.0007	0.1483	0.0013
n-Butane	0.0564	0.0006	3.2803	0.0019	0.3851	0.0033
22-Mpropane	0.0005	0.0000	0.0386	0.0000	0.0044	0.0000
i-Pentane	0.0248	0.0003	1.7882	0.0011	0.1964	0.0017
n-Pentane	0.0321	0.0003	2.3188	0.0014	0.2521	0.0021
22-Mbutane	0.0003	0.0000	0.0277	0.0000	0.0029	0.0000
Cyclopentane	0.0000	0.0000	0.0000	0.0000	0.0000	0.0000
23-Mbutane	0.0043	0.0000	0.3669	0.0002	0.0378	0.0003
2-Mpentane	0.0116	0.0001	0.9971	0.0006	0.1040	0.0009
3-Mpentane	0.0069	0.0001	0.5980	0.0004	0.0613	0.0005
n-Hexane	0.0178	0.0002	1.5366	0.0009	0.1588	0.0014
Hexanes*	0.0000	0.0000	0.0000	0.0000	0.0000	0.0000
Mcyclopentan	0.0151	0.0002	1.2731	0.0008	0.1159	0.0010
Benzene	0.0157	0.0002	1.2301	0.0007	0.0955	0.0008
Cyclohexane	0.0342	0.0004	2.8746	0.0017	0.2518	0.0021
2-Mhexane	0.0054	0.0001	0.5427	0.0003	0.0545	0.0005
3-Mhexane	0.0050	0.0001	0.4971	0.0003	0.0493	0.0004

* Specified by user.

Material Stream: to GB2 (continued)

Fluid Package: Peng Robinson
Property Package: Peng-Robinson

COMPOSITION

Overall Phase (continued)

Vapour Fraction 0.0018

COMPONENTS	MOLAR FLOW (lbmole/hr)	MOLE FRACTION	MASS FLOW (lb/hr)	MASS FRACTION	LIQUID VOLUME FLOW (barrel/day)	LIQUID VOLUME FRACTION
224-Mpentane	0.0000	0.0000	0.0000	0.0000	0.0000	0.0000
n-Heptane	0.0211	0.0002	2.1170	0.0012	0.2111	0.0018
Heptanes*	0.0007	0.0000	0.0667	0.0000	0.0063	0.0001
Mcyclohexane	0.0351	0.0004	3.4485	0.0020	0.3057	0.0026
Toluene	0.0207	0.0002	1.9047	0.0011	0.1499	0.0013
n-Octane	0.0288	0.0003	3.2919	0.0019	0.3195	0.0027
Octanes*	0.0010	0.0000	0.1030	0.0001	0.0094	0.0001
E-Benzene	0.0009	0.0000	0.0932	0.0001	0.0073	0.0001
m-Xylene	0.0036	0.0000	0.3855	0.0002	0.0305	0.0003
o-Xylene	0.0020	0.0000	0.2138	0.0001	0.0166	0.0001
p-Xylene	0.0036	0.0000	0.3846	0.0002	0.0305	0.0003
Nonanes*	0.0004	0.0000	0.0529	0.0000	0.0047	0.0000
Decanes*	0.0002	0.0000	0.0228	0.0000	0.0020	0.0000
Undecanes_3*	0.0053	0.0001	0.7768	0.0005	0.0672	0.0006
Dodecanes_3*	0.0017	0.0000	0.2796	0.0002	0.0238	0.0002
Triadecanes_3*	0.0008	0.0000	0.1330	0.0001	0.0112	0.0001
Tetradecanes_3*	0.0002	0.0000	0.0450	0.0000	0.0037	0.0000
Pentadecanes_3*	0.0001	0.0000	0.0147	0.0000	0.0012	0.0000
Hexadecanes_3*	0.0000	0.0000	0.0040	0.0000	0.0003	0.0000
Heptadecanes_3*	0.0000	0.0000	0.0013	0.0000	0.0001	0.0000
Octadecanes_3*	0.0000	0.0000	0.0005	0.0000	0.0000	0.0000
Nonadecanes_3*	0.0000	0.0000	0.0002	0.0000	0.0000	0.0000
eicosanes_3*	0.0000	0.0000	0.0001	0.0000	0.0000	0.0000
Heneicosanes_3*	0.0000	0.0000	0.0000	0.0000	0.0000	0.0000
Dodocosanes_3*	0.0000	0.0000	0.0000	0.0000	0.0000	0.0000
Triacosanes_3*	0.0000	0.0000	0.0000	0.0000	0.0000	0.0000
Tetracosanes_3*	0.0000	0.0000	0.0000	0.0000	0.0000	0.0000
Pentacosanes_3*	0.0000	0.0000	0.0000	0.0000	0.0000	0.0000
Hexacosanes_3*	0.0000	0.0000	0.0000	0.0000	0.0000	0.0000
Heptacosanes_3*	0.0000	0.0000	0.0000	0.0000	0.0000	0.0000
Octacosanes_3*	0.0000	0.0000	0.0000	0.0000	0.0000	0.0000
Nonacosanes_3*	0.0000	0.0000	0.0000	0.0000	0.0000	0.0000
Triacontanes*	0.0000	0.0000	0.0000	0.0000	0.0000	0.0000
C31+_2*	0.0000	0.0000	0.0000	0.0000	0.0000	0.0000
H2O	91.9657	0.9950	1656.7708	0.9776	113.6727	0.9677
DTRM-G	0.0000	0.0000	0.0000	0.0000	0.0000	0.0000
NC30*	0.0000	0.0000	0.0000	0.0000	0.0000	0.0000
n-Nonane	0.0174	0.0002	2.2259	0.0013	0.2116	0.0018
n-Decane	0.0096	0.0001	1.3594	0.0008	0.1270	0.0011
NC31-35*	0.0000	0.0000	0.0000	0.0000	0.0000	0.0000
TexaTherm	0.0000	0.0000	0.0000	0.0000	0.0000	0.0000
NC31-35_1*	0.0000	0.0000	0.0000	0.0000	0.0000	0.0000
CO	0.0000	0.0000	0.0000	0.0000	0.0000	0.0000
Total	92.4274	1.0000	1694.7681	1.0000	117.4716	1.0000

* Specified by user.

Material Stream: to GB2 (continued)

Fluid Package: Peng Robinson
Property Package: Peng-Robinson

COMPOSITION

Vapour Phase

Phase Fraction 1.800e-003

COMPONENTS	MOLAR FLOW (lbmole/hr)	MOLE FRACTION	MASS FLOW (lb/hr)	MASS FRACTION	LIQUID VOLUME FLOW (barrel/day)	LIQUID VOLUME FRACTION
Oxygen	0.0000	0.0000	0.0000	0.0000	0.0000	0.0000
H2S	0.0000	0.0000	0.0000	0.0000	0.0000	0.0000
Nitrogen	0.0000	0.0000	0.0001	0.0000	0.0000	0.0000
CO2	0.0000	0.0003	0.0020	0.0002	0.0002	0.0002
Methane	0.0002	0.0010	0.0027	0.0003	0.0006	0.0006
Ethane	0.0027	0.0164	0.0818	0.0086	0.0158	0.0145
Propane	0.0475	0.2856	2.0955	0.2199	0.2832	0.2606
i-Butane	0.0155	0.0929	0.8988	0.0943	0.1095	0.1008
n-Butane	0.0377	0.2269	2.1938	0.2302	0.2576	0.2370
22-Mpropane	0.0003	0.0020	0.0234	0.0025	0.0027	0.0025
i-Pentane	0.0114	0.0685	0.8223	0.0863	0.0903	0.0831
n-Pentane	0.0127	0.0764	0.9167	0.0962	0.0997	0.0917
22-Mbutane	0.0001	0.0005	0.0075	0.0008	0.0008	0.0007
Cyclopentane	0.0000	0.0000	0.0000	0.0000	0.0000	0.0000
23-Mbutane	0.0010	0.0062	0.0891	0.0093	0.0092	0.0084
2-Mpentane	0.0026	0.0159	0.2277	0.0239	0.0238	0.0219
3-Mpentane	0.0014	0.0087	0.1244	0.0131	0.0128	0.0117
n-Hexane	0.0032	0.0190	0.2730	0.0287	0.0282	0.0260
Hexanes*	0.0000	0.0000	0.0000	0.0000	0.0000	0.0000
Mcyclopentan	0.0025	0.0150	0.2098	0.0220	0.0191	0.0176
Benzene	0.0025	0.0148	0.1923	0.0202	0.0149	0.0137
Cyclohexane	0.0046	0.0279	0.3910	0.0410	0.0342	0.0315
2-Mhexane	0.0005	0.0030	0.0498	0.0052	0.0050	0.0046
3-Mhexane	0.0004	0.0026	0.0437	0.0046	0.0043	0.0040
224-Mpentane	0.0000	0.0000	0.0000	0.0000	0.0000	0.0000
n-Heptane	0.0015	0.0090	0.1499	0.0157	0.0149	0.0137
Heptanes*	0.0001	0.0003	0.0053	0.0006	0.0005	0.0005
Mcyclohexane	0.0025	0.0152	0.2482	0.0260	0.0220	0.0202
Toluene	0.0012	0.0070	0.1073	0.0113	0.0084	0.0078
n-Octane	0.0008	0.0046	0.0871	0.0091	0.0085	0.0078
Octanes*	0.0000	0.0002	0.0038	0.0004	0.0003	0.0003
E-Benzene	0.0000	0.0001	0.0019	0.0002	0.0002	0.0001
m-Xylene	0.0001	0.0004	0.0068	0.0007	0.0005	0.0005
o-Xylene	0.0000	0.0002	0.0035	0.0004	0.0003	0.0002
p-Xylene	0.0001	0.0004	0.0069	0.0007	0.0005	0.0005
Nonanes*	0.0000	0.0000	0.0007	0.0001	0.0001	0.0001
Decanes*	0.0000	0.0000	0.0001	0.0000	0.0000	0.0000
Undecanes_3*	0.0000	0.0001	0.0018	0.0002	0.0002	0.0001
Dodecanes_3*	0.0000	0.0000	0.0003	0.0000	0.0000	0.0000
Triadecanes_3*	0.0000	0.0000	0.0000	0.0000	0.0000	0.0000
Tetradecanes_3*	0.0000	0.0000	0.0000	0.0000	0.0000	0.0000
Pentadecanes_3*	0.0000	0.0000	0.0000	0.0000	0.0000	0.0000
Hexadecanes_3*	0.0000	0.0000	0.0000	0.0000	0.0000	0.0000
Heptadecanes_3*	0.0000	0.0000	0.0000	0.0000	0.0000	0.0000
Octadecanes_3*	0.0000	0.0000	0.0000	0.0000	0.0000	0.0000
Nonadecanes_3*	0.0000	0.0000	0.0000	0.0000	0.0000	0.0000
eicosanes_3*	0.0000	0.0000	0.0000	0.0000	0.0000	0.0000
Heneicosanes_3*	0.0000	0.0000	0.0000	0.0000	0.0000	0.0000

Licensed to: EXXONMOBIL TECHNICAL COM
* Specified by user.

Material Stream: to GB2 (continued)

Fluid Package: Peng Robinson
Property Package: Peng-Robinson

COMPOSITION

Vapour Phase (continued)

Phase Fraction 1.800e-003

COMPONENTS	MOLAR FLOW (lbmole/hr)	MOLE FRACTION	MASS FLOW (lb/hr)	MASS FRACTION	LIQUID VOLUME FLOW (barrel/day)	LIQUID VOLUME FRACTION
Dodocosanes_3*	0.0000	0.0000	0.0000	0.0000	0.0000	0.0000
Triacosanes_3*	0.0000	0.0000	0.0000	0.0000	0.0000	0.0000
Tetracosanes_3*	0.0000	0.0000	0.0000	0.0000	0.0000	0.0000
Pentacosanes_3*	0.0000	0.0000	0.0000	0.0000	0.0000	0.0000
Hexacosanes_3*	0.0000	0.0000	0.0000	0.0000	0.0000	0.0000
Heptacosanes_3*	0.0000	0.0000	0.0000	0.0000	0.0000	0.0000
Octacosanes_3*	0.0000	0.0000	0.0000	0.0000	0.0000	0.0000
Nonacosanes_3*	0.0000	0.0000	0.0000	0.0000	0.0000	0.0000
Triacontanes*	0.0000	0.0000	0.0000	0.0000	0.0000	0.0000
C31+_2*	0.0000	0.0000	0.0000	0.0000	0.0000	0.0000
H2O	0.0129	0.0776	0.2326	0.0244	0.0160	0.0147
DTRM-G	0.0000	0.0000	0.0000	0.0000	0.0000	0.0000
NC30*	0.0000	0.0000	0.0000	0.0000	0.0000	0.0000
n-Nonane	0.0002	0.0010	0.0220	0.0023	0.0021	0.0019
n-Decane	0.0000	0.0002	0.0053	0.0006	0.0005	0.0005
NC31-35*	0.0000	0.0000	0.0000	0.0000	0.0000	0.0000
TexaTherm	0.0000	0.0000	0.0000	0.0000	0.0000	0.0000
NC31-35_1*	0.0000	0.0000	0.0000	0.0000	0.0000	0.0000
CO	0.0000	0.0000	0.0000	0.0000	0.0000	0.0000
Total	0.1664	1.0000	9.5291	1.0000	1.0868	1.0000

Liquid Phase

Phase Fraction 3.338e-003

COMPONENTS	MOLAR FLOW (lbmole/hr)	MOLE FRACTION	MASS FLOW (lb/hr)	MASS FRACTION	LIQUID VOLUME FLOW (barrel/day)	LIQUID VOLUME FRACTION
Oxygen	0.0000	0.0000	0.0000	0.0000	0.0000	0.0000
H2S	0.0000	0.0000	0.0000	0.0000	0.0000	0.0000
Nitrogen	0.0000	0.0000	0.0000	0.0000	0.0000	0.0000
CO2	0.0000	0.0000	0.0000	0.0000	0.0000	0.0000
Methane	0.0000	0.0000	0.0000	0.0000	0.0000	0.0000
Ethane	0.0001	0.0004	0.0035	0.0001	0.0007	0.0002
Propane	0.0068	0.0220	0.2995	0.0104	0.0405	0.0148
i-Butane	0.0055	0.0177	0.3183	0.0111	0.0388	0.0142
n-Butane	0.0187	0.0606	1.0865	0.0378	0.1276	0.0468
22-Mpropane	0.0002	0.0007	0.0152	0.0005	0.0017	0.0006
i-Pentane	0.0134	0.0434	0.9659	0.0336	0.1061	0.0389
n-Pentane	0.0194	0.0630	1.4021	0.0488	0.1525	0.0559
22-Mbutane	0.0002	0.0008	0.0201	0.0007	0.0021	0.0008
Cyclopentane	0.0000	0.0000	0.0000	0.0000	0.0000	0.0000
23-Mbutane	0.0032	0.0104	0.2779	0.0097	0.0286	0.0105
2-Mpentane	0.0089	0.0289	0.7693	0.0268	0.0802	0.0294
3-Mpentane	0.0055	0.0178	0.4736	0.0165	0.0486	0.0178
n-Hexane	0.0147	0.0475	1.2635	0.0440	0.1306	0.0479
Hexanes*	0.0000	0.0000	0.0000	0.0000	0.0000	0.0000
Mcyclopentan	0.0126	0.0409	1.0633	0.0370	0.0968	0.0355
Benzene	0.0133	0.0431	1.0378	0.0362	0.0806	0.0295
Cyclohexane	0.0295	0.0956	2.4836	0.0865	0.2175	0.0797
2-Mhexane	0.0049	0.0159	0.4929	0.0172	0.0495	0.0182
3-Mhexane	0.0045	0.0147	0.4534	0.0158	0.0450	0.0165

Licensed to: EXXONMOBIL TECHNICAL COM
* Specified by user.

Material Stream: to GB2 (continued)

Fluid Package: Peng Robinson
Property Package: Peng-Robinson

COMPOSITION

Liquid Phase (continued)

Phase Fraction 3.338e-003

COMPONENTS	MOLAR FLOW (lbmole/hr)	MOLE FRACTION	MASS FLOW (lb/hr)	MASS FRACTION	LIQUID VOLUME FLOW (barrel/day)	LIQUID VOLUME FRACTION
224-Mpentane	0.0000	0.0000	0.0000	0.0000	0.0000	0.0000
n-Heptane	0.0196	0.0636	1.9671	0.0685	0.1961	0.0719
Heptanes*	0.0006	0.0021	0.0614	0.0021	0.0058	0.0021
Mcyclohexane	0.0326	0.1056	3.2003	0.1115	0.2837	0.1040
Toluene	0.0195	0.0632	1.7973	0.0626	0.1415	0.0518
n-Octane	0.0281	0.0909	3.2047	0.1116	0.3111	0.1140
Octanes*	0.0009	0.0030	0.0992	0.0035	0.0091	0.0033
E-Benzene	0.0009	0.0028	0.0912	0.0032	0.0072	0.0026
m-Xylene	0.0036	0.0116	0.3787	0.0132	0.0299	0.0110
o-Xylene	0.0020	0.0064	0.2103	0.0073	0.0163	0.0060
p-Xylene	0.0036	0.0115	0.3777	0.0132	0.0299	0.0110
Nonanes*	0.0004	0.0014	0.0522	0.0018	0.0047	0.0017
Decanes*	0.0002	0.0005	0.0226	0.0008	0.0020	0.0007
Undecanes_3*	0.0053	0.0171	0.7749	0.0270	0.0670	0.0246
Dodecanes_3*	0.0017	0.0056	0.2793	0.0097	0.0238	0.0087
Triadecanes_3*	0.0008	0.0025	0.1330	0.0046	0.0112	0.0041
Tetradecanes_3*	0.0002	0.0008	0.0450	0.0016	0.0037	0.0014
Pentadecanes_3*	0.0001	0.0002	0.0147	0.0005	0.0012	0.0004
Hexadecanes_3*	0.0000	0.0001	0.0040	0.0001	0.0003	0.0001
Heptadecanes_3*	0.0000	0.0000	0.0013	0.0000	0.0001	0.0000
Octadecanes_3*	0.0000	0.0000	0.0005	0.0000	0.0000	0.0000
Nonadecanes_3*	0.0000	0.0000	0.0002	0.0000	0.0000	0.0000
eicosanes_3*	0.0000	0.0000	0.0001	0.0000	0.0000	0.0000
Heneicosanes_3*	0.0000	0.0000	0.0000	0.0000	0.0000	0.0000
Dodocosanes_3*	0.0000	0.0000	0.0000	0.0000	0.0000	0.0000
Triacosanes_3*	0.0000	0.0000	0.0000	0.0000	0.0000	0.0000
Tetracosanes_3*	0.0000	0.0000	0.0000	0.0000	0.0000	0.0000
Pentacosanes_3*	0.0000	0.0000	0.0000	0.0000	0.0000	0.0000
Hexacosanes_3*	0.0000	0.0000	0.0000	0.0000	0.0000	0.0000
Heptacosanes_3*	0.0000	0.0000	0.0000	0.0000	0.0000	0.0000
Octacosanes_3*	0.0000	0.0000	0.0000	0.0000	0.0000	0.0000
Nonacosanes_3*	0.0000	0.0000	0.0000	0.0000	0.0000	0.0000
Triacontanes*	0.0000	0.0000	0.0000	0.0000	0.0000	0.0000
C31+_2*	0.0000	0.0000	0.0000	0.0000	0.0000	0.0000
H2O	0.0003	0.0010	0.0055	0.0002	0.0004	0.0001
DTRM-G	0.0000	0.0000	0.0000	0.0000	0.0000	0.0000
NC30*	0.0000	0.0000	0.0000	0.0000	0.0000	0.0000
n-Nonane	0.0172	0.0557	2.2039	0.0768	0.2095	0.0768
n-Decane	0.0095	0.0308	1.3541	0.0472	0.1265	0.0464
NC31-35*	0.0000	0.0000	0.0000	0.0000	0.0000	0.0000
TexaTherm	0.0000	0.0000	0.0000	0.0000	0.0000	0.0000
NC31-35_1*	0.0000	0.0000	0.0000	0.0000	0.0000	0.0000
CO	0.0000	0.0000	0.0000	0.0000	0.0000	0.0000
Total	0.3086	1.0000	28.7059	1.0000	2.7284	1.0000

* Specified by user.

Material Stream: to GB2 (continued)

Fluid Package: Peng Robinson
Property Package: Peng-Robinson

COMPOSITION

Aqueous Phase

Phase Fraction 0.9949

COMPONENTS	MOLAR FLOW (lbmole/hr)	MOLE FRACTION	MASS FLOW (lb/hr)	MASS FRACTION	LIQUID VOLUME FLOW (barrel/day)	LIQUID VOLUME FRACTION
Oxygen	0.0000	0.0000	0.0000	0.0000	0.0000	0.0000
H2S	0.0000	0.0000	0.0000	0.0000	0.0000	0.0000
Nitrogen	0.0000	0.0000	0.0000	0.0000	0.0000	0.0000
CO2	0.0000	0.0000	0.0004	0.0000	0.0000	0.0000
Methane	0.0000	0.0000	0.0000	0.0000	0.0000	0.0000
Ethane	0.0000	0.0000	0.0000	0.0000	0.0000	0.0000
Propane	0.0000	0.0000	0.0000	0.0000	0.0000	0.0000
i-Butane	0.0000	0.0000	0.0000	0.0000	0.0000	0.0000
n-Butane	0.0000	0.0000	0.0000	0.0000	0.0000	0.0000
22-Mpropane	0.0000	0.0000	0.0000	0.0000	0.0000	0.0000
i-Pentane	0.0000	0.0000	0.0000	0.0000	0.0000	0.0000
n-Pentane	0.0000	0.0000	0.0000	0.0000	0.0000	0.0000
22-Mbutane	0.0000	0.0000	0.0000	0.0000	0.0000	0.0000
Cyclopentane	0.0000	0.0000	0.0000	0.0000	0.0000	0.0000
23-Mbutane	0.0000	0.0000	0.0000	0.0000	0.0000	0.0000
2-Mpentane	0.0000	0.0000	0.0000	0.0000	0.0000	0.0000
3-Mpentane	0.0000	0.0000	0.0000	0.0000	0.0000	0.0000
n-Hexane	0.0000	0.0000	0.0000	0.0000	0.0000	0.0000
Hexanes*	0.0000	0.0000	0.0000	0.0000	0.0000	0.0000
Mcyclopentan	0.0000	0.0000	0.0000	0.0000	0.0000	0.0000
Benzene	0.0000	0.0000	0.0000	0.0000	0.0000	0.0000
Cyclohexane	0.0000	0.0000	0.0000	0.0000	0.0000	0.0000
2-Mhexane	0.0000	0.0000	0.0000	0.0000	0.0000	0.0000
3-Mhexane	0.0000	0.0000	0.0000	0.0000	0.0000	0.0000
224-Mpentane	0.0000	0.0000	0.0000	0.0000	0.0000	0.0000
n-Heptane	0.0000	0.0000	0.0000	0.0000	0.0000	0.0000
Heptanes*	0.0000	0.0000	0.0000	0.0000	0.0000	0.0000
Mcyclohexane	0.0000	0.0000	0.0000	0.0000	0.0000	0.0000
Toluene	0.0000	0.0000	0.0000	0.0000	0.0000	0.0000
n-Octane	0.0000	0.0000	0.0000	0.0000	0.0000	0.0000
Octanes*	0.0000	0.0000	0.0000	0.0000	0.0000	0.0000
E-Benzene	0.0000	0.0000	0.0000	0.0000	0.0000	0.0000
m-Xylene	0.0000	0.0000	0.0000	0.0000	0.0000	0.0000
o-Xylene	0.0000	0.0000	0.0000	0.0000	0.0000	0.0000
p-Xylene	0.0000	0.0000	0.0000	0.0000	0.0000	0.0000
Nonanes*	0.0000	0.0000	0.0000	0.0000	0.0000	0.0000
Decanes*	0.0000	0.0000	0.0000	0.0000	0.0000	0.0000
Undecanes_3*	0.0000	0.0000	0.0000	0.0000	0.0000	0.0000
Dodecanes_3*	0.0000	0.0000	0.0000	0.0000	0.0000	0.0000
Triadecanes_3*	0.0000	0.0000	0.0000	0.0000	0.0000	0.0000
Tetradecanes_3*	0.0000	0.0000	0.0000	0.0000	0.0000	0.0000
Pentadecanes_3*	0.0000	0.0000	0.0000	0.0000	0.0000	0.0000
Hexadecanes_3*	0.0000	0.0000	0.0000	0.0000	0.0000	0.0000
Heptadecanes_3*	0.0000	0.0000	0.0000	0.0000	0.0000	0.0000
Octadecanes_3*	0.0000	0.0000	0.0000	0.0000	0.0000	0.0000
Nonadecanes_3*	0.0000	0.0000	0.0000	0.0000	0.0000	0.0000
eicosanes_3*	0.0000	0.0000	0.0000	0.0000	0.0000	0.0000
Heneicosanes_3*	0.0000	0.0000	0.0000	0.0000	0.0000	0.0000

Licensed to: EXXONMOBIL TECHNICAL COM
* Specified by user.

Material Stream: to GB2 (continued)

Fluid Package: Peng Robinson
Property Package: Peng-Robinson

COMPOSITION

Aqueous Phase (continued)

Phase Fraction 0.9949

COMPONENTS	MOLAR FLOW (lbmole/hr)	MOLE FRACTION	MASS FLOW (lb/hr)	MASS FRACTION	LIQUID VOLUME FLOW (barrel/day)	LIQUID VOLUME FRACTION
Dodocosanes_3*	0.0000	0.0000	0.0000	0.0000	0.0000	0.0000
Triacosanes_3*	0.0000	0.0000	0.0000	0.0000	0.0000	0.0000
Tetracosanes_3*	0.0000	0.0000	0.0000	0.0000	0.0000	0.0000
Pentacosanes_3*	0.0000	0.0000	0.0000	0.0000	0.0000	0.0000
Hexacosanes_3*	0.0000	0.0000	0.0000	0.0000	0.0000	0.0000
Heptacosanes_3*	0.0000	0.0000	0.0000	0.0000	0.0000	0.0000
Octacosanes_3*	0.0000	0.0000	0.0000	0.0000	0.0000	0.0000
Nonacosanes_3*	0.0000	0.0000	0.0000	0.0000	0.0000	0.0000
Triacontanes*	0.0000	0.0000	0.0000	0.0000	0.0000	0.0000
C31+_2*	0.0000	0.0000	0.0000	0.0000	0.0000	0.0000
H2O	91.9525	1.0000	1656.5327	1.0000	113.6564	1.0000
DTRM-G	0.0000	0.0000	0.0000	0.0000	0.0000	0.0000
NC30*	0.0000	0.0000	0.0000	0.0000	0.0000	0.0000
n-Nonane	0.0000	0.0000	0.0000	0.0000	0.0000	0.0000
n-Decane	0.0000	0.0000	0.0000	0.0000	0.0000	0.0000
NC31-35*	0.0000	0.0000	0.0000	0.0000	0.0000	0.0000
TexaTherm	0.0000	0.0000	0.0000	0.0000	0.0000	0.0000
NC31-35_1*	0.0000	0.0000	0.0000	0.0000	0.0000	0.0000
CO	0.0000	0.0000	0.0000	0.0000	0.0000	0.0000
Total	91.9525	1.0000	1656.5331	1.0000	113.6564	1.0000

* Specified by user.

Material Stream: WiO2

Fluid Package: Peng Robinson
Property Package: Peng-Robinson

CONDITIONS

	Overall	Liquid Phase	Aqueous Phase		
Vapour / Phase Fraction	0.0000	0.0200	0.9800		
Temperature: (F)	60.37	60.37	60.37		
Pressure: (psig)	0.2500	0.2500	0.2500		
Molar Flow (MMSCFD)	62.69	1.254	61.44		
Mass Flow (lb/hr)	1.424e+005	2.085e+004	1.215e+005		
Std Ideal Liq Vol Flow (barrel/day)	1.014e+004	1800	8338		
Molar Enthalpy (Btu/lbmole)	-1.236e+005	-1.347e+005	-1.234e+005		
Molar Entropy (Btu/lbmole-F)	13.07	53.77	12.24		
Heat Flow (Btu/hr)	-8.507e+008	-1.854e+007	-8.322e+008		
Liq Vol Flow @Std Cond (barrel/day)	9787 *	1791	8200		

PROPERTIES

	Overall	Liquid Phase	Aqueous Phase		
Molecular Weight	20.68	151.4	18.02		
Molar Density (lbmole/ft3)	2.944	0.3284	3.515		
Mass Density (lb/ft3)	60.88	49.74	63.32		
Act. Volume Flow (barrel/day)	9997	1792	8205		
Mass Enthalpy (Btu/lb)	-5975	-889.3	-6848		
Mass Entropy (Btu/lb-F)	0.6320	0.3551	0.6796		
Heat Capacity (Btu/lbmole-F)	19.58	68.96	18.57		
Mass Heat Capacity (Btu/lb-F)	0.9465	0.4554	1.031		
LHV Molar Basis (Std) (Btu/SCF)	---	---	2.700e-008		
LHV Mass Basis (Std) (Btu/lb)	---	---	5.686e-007		
Phase Fraction [Vol. Basis]	0.0000	0.1775	0.8225		
Phase Fraction [Mass Basis]	0.0000	0.1464	0.8536		
Partial Pressure of CO2 (psig)	-14.70	---	---		
Cost Based on Flow (Cost/s)	0.0000	0.0000	0.0000		
Act. Gas Flow (ACFM)	---	---	---		
Avg. Liq. Density (lbmole/ft3)	2.902	0.3270	3.458		
Specific Heat (Btu/lbmole-F)	19.58	68.96	18.57		
Std. Gas Flow (MMSCFD)	62.57	1.251	61.32		
Std. Ideal Liq. Mass Density (lb/ft3)	60.03	49.51	62.30		
Act. Liq. Flow (USGPM)	291.6	52.27	239.3		
Z Factor	---	8.155e-003	7.620e-004		
Watson K	11.86	11.86	8.524		
User Property	---	---	---		
Cp/(Cp - R)	1.113	1.030	1.120		
Cp/Cv	1.117	1.212	1.141		
Heat of Vap. (Btu/lbmole)	2.393e+004	---	---		
Kinematic Viscosity (cSt)	1.559	3.135	1.098		
Liq. Mass Density (Std. Cond) (lb/ft3)	62.19	49.77	63.35		
Liq. Vol. Flow (Std. Cond) (barrel/day)	9787	1791	8200		
Liquid Fraction	1.000	1.000	1.000		
Molar Volume (ft3/lbmole)	0.3397	3.045	0.2845		
Mass Heat of Vap. (Btu/lb)	1157	---	---		
Phase Fraction [Molar Basis]	0.0000	0.0200	0.9800		
Surface Tension (dyne/cm)	---	23.26	73.69		
Thermal Conductivity (Btu/hr-ft-F)	0.2689	7.054e-002	0.3447		
Viscosity (cP)	1.521	2.498	1.114		
Cv (Semi-Ideal) (Btu/lbmole-F)	17.59	66.98	16.58		
Mass Cv (Semi-Ideal) (Btu/lb-F)	0.8505	0.4423	0.9205		

* Specified by user.

Material Stream: WiO2 (continued)

Fluid Package: Peng Robinson
Property Package: Peng-Robinson

PROPERTIES

		Overall	Liquid Phase	Aqueous Phase		
Cv	(Btu/lbmole-F)	17.52	56.90	16.28		
Mass Cv	(Btu/lb-F)	0.8471	0.3757	0.9036		
Cv (Ent. Method)	(Btu/lbmole-F)	---	60.85	15.99		
Mass Cv (Ent. Method)	(Btu/lb-F)	---	0.4018	0.8874		
Cp/Cv (Ent. Method)		---	1.133	1.162		
Liq. Vol. Flow - Sum(Std. Cond)	(barrel/day)	9991	1791	8200		
Partial Pressure of H2S	(psig)	-14.70	---	---		
Reid VP at 37.8 C	(psig)	-0.7596	-0.7773	-13.72		
True VP at 37.8 C	(psig)	5.824	5.218	-13.72		
Viscosity Index		6.529	---	---		
HHV Molar Basis (Std)	(Btu/SCF)	---	---	46.46		
HHV Mass Basis (Std)	(Btu/lb)	---	---	978.7		
CO2 Loading		---	---	---		
CO2 App ML Con	(lbmole/ft3)	4.733e-006	9.535e-006	3.684e-006		
CO2 App WT Con	(lbmol/lb)	7.773e-008	1.917e-007	5.818e-008		
Phase Fraction [Act. Vol. Basis]		0.0000	0.1793	0.8207		
Mass Exergy	(Btu/lb)	0.2501	---	---		
Ideal Gas Cp/Cv		1.285	1.038	1.330		
Ideal Gas Cp	(Btu/lbmole-F)	8.943	54.75	8.008		
Mass Ideal Gas Cp	(Btu/lb-F)	0.4324	0.3615	0.4445		
Bubble Point Pressure	(psig)	-2.582	---	---		

COMPOSITION

Overall Phase

Vapour Fraction 0.0000

COMPONENTS	MOLAR FLOW (lbmole/hr)	MOLE FRACTION	MASS FLOW (lb/hr)	MASS FRACTION	LIQUID VOLUME FLOW (barrel/day)	LIQUID VOLUME FRACTION
Oxygen	0.0000	0.0000	0.0000	0.0000	0.0000	0.0000
H2S	0.0000	0.0000	0.0000	0.0000	0.0000	0.0000
Nitrogen	0.0000	0.0000	0.0000	0.0000	0.0000	0.0000
CO2	0.0111	0.0000	0.4871	0.0000	0.0404	0.0000
Methane	0.0015	0.0000	0.0238	0.0000	0.0055	0.0000
Ethane	1.1671	0.0002	35.0950	0.0002	6.7562	0.0007
Propane	5.2300	0.0008	230.6267	0.0016	31.1671	0.0031
i-Butane	1.9957	0.0003	115.9953	0.0008	14.1335	0.0014
n-Butane	7.1568	0.0010	415.9831	0.0029	48.8382	0.0048
22-Mpropane	0.0813	0.0000	5.8688	0.0000	0.6747	0.0001
i-Pentane	3.9500	0.0006	284.9975	0.0020	31.3014	0.0031
n-Pentane	5.2162	0.0008	376.3556	0.0026	40.9226	0.0040
22-Mbutane	0.0563	0.0000	4.8511	0.0000	0.5090	0.0001
Cyclopentane	0.0000	0.0000	0.0000	0.0000	0.0000	0.0000
23-Mbutane	0.7749	0.0001	66.7761	0.0005	6.8740	0.0007
2-Mpentane	2.1195	0.0003	182.6558	0.0013	19.0508	0.0019
3-Mpentane	1.2855	0.0002	110.7796	0.0008	11.3607	0.0011
n-Hexane	3.3995	0.0005	292.9610	0.0021	30.2715	0.0030
Hexanes*	0.0000	0.0000	0.0000	0.0000	0.0000	0.0000
Mcyclopentan	2.7389	0.0004	230.5077	0.0016	20.9869	0.0021
Benzene	2.8214	0.0004	220.3826	0.0015	17.1054	0.0017
Cyclohexane	6.3723	0.0009	536.2948	0.0038	46.9693	0.0046
2-Mhexane	1.2070	0.0002	120.9500	0.0008	12.1516	0.0012
3-Mhexane	1.0942	0.0002	109.6411	0.0008	10.8772	0.0011

Licensed to: EXXONMOBIL TECHNICAL COM
* Specified by user.

Material Stream: WiO2 (continued)

Fluid Package: Peng Robinson
Property Package: Peng-Robinson

COMPOSITION

Overall Phase (continued)

Vapour Fraction 0.0000

COMPONENTS	MOLAR FLOW (lbmole/hr)	MOLE FRACTION	MASS FLOW (lb/hr)	MASS FRACTION	LIQUID VOLUME FLOW (barrel/day)	LIQUID VOLUME FRACTION
224-Mpentane	0.0000	0.0000	0.0000	0.0000	0.0000	0.0000
n-Heptane	5.1199	0.0007	513.0376	0.0036	51.1479	0.0050
Heptanes*	0.0000	0.0000	0.0000	0.0000	0.0000	0.0000
Mcyclohexane	7.6385	0.0011	750.0198	0.0053	66.4865	0.0066
Toluene	4.6932	0.0007	432.4374	0.0030	34.0330	0.0034
n-Octane	9.3452	0.0014	1067.5161	0.0075	103.6266	0.0102
Octanes*	0.0000	0.0000	0.0000	0.0000	0.0000	0.0000
E-Benzene	0.2560	0.0000	27.1779	0.0002	2.1389	0.0002
m-Xylene	1.1671	0.0002	123.9077	0.0009	9.7872	0.0010
o-Xylene	0.6551	0.0001	69.5519	0.0005	5.3926	0.0005
p-Xylene	1.1671	0.0002	123.9077	0.0009	9.8172	0.0010
Nonanes*	0.0000	0.0000	0.0000	0.0000	0.0000	0.0000
Decanes*	0.0000	0.0000	0.0000	0.0000	0.0000	0.0000
Undecanes_3*	5.7943	0.0008	851.7581	0.0060	73.6475	0.0073
Dodecanes_3*	4.1014	0.0006	660.3269	0.0046	56.2970	0.0056
Triadecanes_3*	4.3767	0.0006	765.9176	0.0054	64.5122	0.0064
Tetradecanes_3*	3.6748	0.0005	698.2030	0.0049	58.1428	0.0057
Pentadecanes_3*	3.2343	0.0005	666.2726	0.0047	54.8919	0.0054
Hexadecanes_3*	2.2984	0.0003	510.2539	0.0036	41.6423	0.0041
Heptadecanes_3*	1.9268	0.0003	456.6603	0.0032	36.9550	0.0036
Octadecanes_3*	1.8167	0.0003	455.9997	0.0032	36.6386	0.0036
Nonadecanes_3*	1.6929	0.0002	445.2231	0.0031	35.5599	0.0035
eicosanes_3*	1.1121	0.0002	305.8165	0.0021	24.2852	0.0024
Heneicosanes_3*	1.1121	0.0002	323.6095	0.0023	25.5149	0.0025
Dodocosanes_3*	0.8974	0.0001	269.2066	0.0019	21.1362	0.0021
Triacosanes_3*	0.7983	0.0001	249.0574	0.0017	19.4520	0.0019
Tetracosanes_3*	0.6840	0.0001	221.6248	0.0016	17.2243	0.0017
Pentacosanes_3*	0.5849	0.0001	197.1223	0.0014	15.2441	0.0015
Hexacosanes_3*	0.5560	0.0001	194.0545	0.0014	14.9379	0.0015
Heptacosanes_3*	0.5423	0.0001	195.2161	0.0014	14.9652	0.0015
Octacosanes_3*	0.4982	0.0001	185.3397	0.0013	14.1492	0.0014
Nonacosanes_3*	0.4418	0.0001	168.7661	0.0012	12.8408	0.0013
Triacontanes*	0.0000	0.0000	0.0000	0.0000	0.0000	0.0000
C31+_2*	7.9138	0.0011	4154.7416	0.0292	305.0506	0.0301
H2O	6746.0376	0.9800	121530.5450	0.8536	8338.3335	0.8225
DTRM-G	0.0000	0.0000	0.0000	0.0000	0.0000	0.0000
NC30*	0.4556	0.0001	208.1906	0.0015	15.5106	0.0015
n-Nonane	8.3680	0.0012	1073.2683	0.0075	102.0340	0.0101
n-Decane	8.0377	0.0012	1143.6387	0.0080	106.8731	0.0105
NC31-35*	0.0000	0.0000	0.0000	0.0000	0.0000	0.0000
TexaTherm	0.0000	0.0000	0.0000	0.0000	0.0000	0.0000
NC31-35_1*	0.0000	0.0000	0.0000	0.0000	0.0000	0.0000
CO	0.0000	0.0000	0.0000	0.0000	0.0000	0.0000
Total	6883.6772	1.0000	142379.6014	1.0000	10138.2648	1.0000

* Specified by user.

Material Stream: WiO2 (continued)

Fluid Package: Peng Robinson
Property Package: Peng-Robinson

COMPOSITION

Liquid Phase

Phase Fraction 2.000e-002

COMPONENTS	MOLAR FLOW (lbmole/hr)	MOLE FRACTION	MASS FLOW (lb/hr)	MASS FRACTION	LIQUID VOLUME FLOW (barrel/day)	LIQUID VOLUME FRACTION
Oxygen	0.0000	0.0000	0.0000	0.0000	0.0000	0.0000
H2S	0.0000	0.0000	0.0000	0.0000	0.0000	0.0000
Nitrogen	0.0000	0.0000	0.0000	0.0000	0.0000	0.0000
CO2	0.0040	0.0000	0.1759	0.0000	0.0146	0.0000
Methane	0.0015	0.0000	0.0238	0.0000	0.0055	0.0000
Ethane	1.1671	0.0085	35.0950	0.0017	6.7562	0.0038
Propane	5.2300	0.0380	230.6267	0.0111	31.1671	0.0173
i-Butane	1.9957	0.0145	115.9953	0.0056	14.1335	0.0079
n-Butane	7.1568	0.0520	415.9831	0.0200	48.8382	0.0271
22-Mpropane	0.0813	0.0006	5.8688	0.0003	0.6747	0.0004
i-Pentane	3.9500	0.0287	284.9975	0.0137	31.3014	0.0174
n-Pentane	5.2162	0.0379	376.3556	0.0181	40.9226	0.0227
22-Mbutane	0.0563	0.0004	4.8511	0.0002	0.5090	0.0003
Cyclopentane	0.0000	0.0000	0.0000	0.0000	0.0000	0.0000
23-Mbutane	0.7749	0.0056	66.7761	0.0032	6.8740	0.0038
2-Mpentane	2.1195	0.0154	182.6558	0.0088	19.0508	0.0106
3-Mpentane	1.2855	0.0093	110.7796	0.0053	11.3607	0.0063
n-Hexane	3.3995	0.0247	292.9610	0.0141	30.2715	0.0168
Hexanes*	0.0000	0.0000	0.0000	0.0000	0.0000	0.0000
Mcyclopentan	2.7389	0.0199	230.5077	0.0111	20.9869	0.0117
Benzene	2.8214	0.0205	220.3826	0.0106	17.1054	0.0095
Cyclohexane	6.3723	0.0463	536.2948	0.0257	46.9693	0.0261
2-Mhexane	1.2070	0.0088	120.9500	0.0058	12.1516	0.0068
3-Mhexane	1.0942	0.0079	109.6411	0.0053	10.8772	0.0060
224-Mpentane	0.0000	0.0000	0.0000	0.0000	0.0000	0.0000
n-Heptane	5.1199	0.0372	513.0376	0.0246	51.1479	0.0284
Heptanes*	0.0000	0.0000	0.0000	0.0000	0.0000	0.0000
Mcyclohexane	7.6385	0.0555	750.0198	0.0360	66.4865	0.0369
Toluene	4.6932	0.0341	432.4374	0.0207	34.0330	0.0189
n-Octane	9.3452	0.0679	1067.5161	0.0512	103.6266	0.0576
Octanes*	0.0000	0.0000	0.0000	0.0000	0.0000	0.0000
E-Benzene	0.2560	0.0019	27.1779	0.0013	2.1389	0.0012
m-Xylene	1.1671	0.0085	123.9077	0.0059	9.7872	0.0054
o-Xylene	0.6551	0.0048	69.5519	0.0033	5.3926	0.0030
p-Xylene	1.1671	0.0085	123.9077	0.0059	9.8172	0.0055
Nonanes*	0.0000	0.0000	0.0000	0.0000	0.0000	0.0000
Decanes*	0.0000	0.0000	0.0000	0.0000	0.0000	0.0000
Undecanes_3*	5.7943	0.0421	851.7581	0.0409	73.6475	0.0409
Dodecanes_3*	4.1014	0.0298	660.3269	0.0317	56.2970	0.0313
Triadecanes_3*	4.3767	0.0318	765.9176	0.0367	64.5122	0.0358
Tetradecanes_3*	3.6748	0.0267	698.2030	0.0335	58.1428	0.0323
Pentadecanes_3*	3.2343	0.0235	666.2726	0.0320	54.8919	0.0305
Hexadecanes_3*	2.2984	0.0167	510.2539	0.0245	41.6423	0.0231
Heptadecanes_3*	1.9268	0.0140	456.6603	0.0219	36.9550	0.0205
Octadecanes_3*	1.8167	0.0132	455.9997	0.0219	36.6386	0.0204
Nonadecanes_3*	1.6929	0.0123	445.2231	0.0214	35.5599	0.0198
eicosanes_3*	1.1121	0.0081	305.8165	0.0147	24.2852	0.0135
Heneicosanes_3*	1.1121	0.0081	323.6095	0.0155	25.5149	0.0142

* Specified by user.

Material Stream: WiO2 (continued)

Fluid Package: Peng Robinson
Property Package: Peng-Robinson

COMPOSITION

Liquid Phase (continued)

Phase Fraction 2.000e-002

COMPONENTS	MOLAR FLOW (lbmole/hr)	MOLE FRACTION	MASS FLOW (lb/hr)	MASS FRACTION	LIQUID VOLUME FLOW (barrel/day)	LIQUID VOLUME FRACTION
Dodocosanes_3*	0.8974	0.0065	269.2066	0.0129	21.1362	0.0117
Triacosanes_3*	0.7983	0.0058	249.0574	0.0119	19.4520	0.0108
Tetracosanes_3*	0.6840	0.0050	221.6248	0.0106	17.2243	0.0096
Pentacosanes_3*	0.5849	0.0042	197.1223	0.0095	15.2441	0.0085
Hexacosanes_3*	0.5560	0.0040	194.0545	0.0093	14.9379	0.0083
Heptacosanes_3*	0.5423	0.0039	195.2161	0.0094	14.9652	0.0083
Octacosanes_3*	0.4982	0.0036	185.3397	0.0089	14.1492	0.0079
Nonacosanes_3*	0.4418	0.0032	168.7661	0.0081	12.8408	0.0071
Triacontanes*	0.0000	0.0000	0.0000	0.0000	0.0000	0.0000
C31+_2*	7.9138	0.0575	4154.7416	0.1993	305.0506	0.1695
H2O	0.0410	0.0003	0.7391	0.0000	0.0507	0.0000
DTRM-G	0.0000	0.0000	0.0000	0.0000	0.0000	0.0000
NC30*	0.4556	0.0033	208.1906	0.0100	15.5106	0.0086
n-Nonane	8.3680	0.0608	1073.2683	0.0515	102.0340	0.0567
n-Decane	8.0377	0.0584	1143.6387	0.0549	106.8731	0.0594
NC31-35*	0.0000	0.0000	0.0000	0.0000	0.0000	0.0000
TexaTherm	0.0000	0.0000	0.0000	0.0000	0.0000	0.0000
NC31-35_1*	0.0000	0.0000	0.0000	0.0000	0.0000	0.0000
CO	0.0000	0.0000	0.0000	0.0000	0.0000	0.0000
Total	137.6736	1.0000	20849.4844	1.0000	1799.9562	1.0000

Aqueous Phase

Phase Fraction 0.9800

COMPONENTS	MOLAR FLOW (lbmole/hr)	MOLE FRACTION	MASS FLOW (lb/hr)	MASS FRACTION	LIQUID VOLUME FLOW (barrel/day)	LIQUID VOLUME FRACTION
Oxygen	0.0000	0.0000	0.0000	0.0000	0.0000	0.0000
H2S	0.0000	0.0000	0.0000	0.0000	0.0000	0.0000
Nitrogen	0.0000	0.0000	0.0000	0.0000	0.0000	0.0000
CO2	0.0071	0.0000	0.3112	0.0000	0.0258	0.0000
Methane	0.0000	0.0000	0.0000	0.0000	0.0000	0.0000
Ethane	0.0000	0.0000	0.0000	0.0000	0.0000	0.0000
Propane	0.0000	0.0000	0.0000	0.0000	0.0000	0.0000
i-Butane	0.0000	0.0000	0.0000	0.0000	0.0000	0.0000
n-Butane	0.0000	0.0000	0.0000	0.0000	0.0000	0.0000
22-Mpropane	0.0000	0.0000	0.0000	0.0000	0.0000	0.0000
i-Pentane	0.0000	0.0000	0.0000	0.0000	0.0000	0.0000
n-Pentane	0.0000	0.0000	0.0000	0.0000	0.0000	0.0000
22-Mbutane	0.0000	0.0000	0.0000	0.0000	0.0000	0.0000
Cyclopentane	0.0000	0.0000	0.0000	0.0000	0.0000	0.0000
23-Mbutane	0.0000	0.0000	0.0000	0.0000	0.0000	0.0000
2-Mpentane	0.0000	0.0000	0.0000	0.0000	0.0000	0.0000
3-Mpentane	0.0000	0.0000	0.0000	0.0000	0.0000	0.0000
n-Hexane	0.0000	0.0000	0.0000	0.0000	0.0000	0.0000
Hexanes*	0.0000	0.0000	0.0000	0.0000	0.0000	0.0000
Mcyclopentan	0.0000	0.0000	0.0000	0.0000	0.0000	0.0000
Benzene	0.0000	0.0000	0.0000	0.0000	0.0000	0.0000
Cyclohexane	0.0000	0.0000	0.0000	0.0000	0.0000	0.0000
2-Mhexane	0.0000	0.0000	0.0000	0.0000	0.0000	0.0000
3-Mhexane	0.0000	0.0000	0.0000	0.0000	0.0000	0.0000

* Specified by user.

Material Stream: WiO2 (continued)

Fluid Package: Peng Robinson
Property Package: Peng-Robinson

COMPOSITION

Aqueous Phase (continued)

Phase Fraction 0.9800

COMPONENTS	MOLAR FLOW (lbmole/hr)	MOLE FRACTION	MASS FLOW (lb/hr)	MASS FRACTION	LIQUID VOLUME FLOW (barrel/day)	LIQUID VOLUME FRACTION
224-Mpentane	0.0000	0.0000	0.0000	0.0000	0.0000	0.0000
n-Heptane	0.0000	0.0000	0.0000	0.0000	0.0000	0.0000
Heptanes*	0.0000	0.0000	0.0000	0.0000	0.0000	0.0000
Mcyclohexane	0.0000	0.0000	0.0000	0.0000	0.0000	0.0000
Toluene	0.0000	0.0000	0.0000	0.0000	0.0000	0.0000
n-Octane	0.0000	0.0000	0.0000	0.0000	0.0000	0.0000
Octanes*	0.0000	0.0000	0.0000	0.0000	0.0000	0.0000
E-Benzene	0.0000	0.0000	0.0000	0.0000	0.0000	0.0000
m-Xylene	0.0000	0.0000	0.0000	0.0000	0.0000	0.0000
o-Xylene	0.0000	0.0000	0.0000	0.0000	0.0000	0.0000
p-Xylene	0.0000	0.0000	0.0000	0.0000	0.0000	0.0000
Nonanes*	0.0000	0.0000	0.0000	0.0000	0.0000	0.0000
Decanes*	0.0000	0.0000	0.0000	0.0000	0.0000	0.0000
Undecanes_3*	0.0000	0.0000	0.0000	0.0000	0.0000	0.0000
Dodecanes_3*	0.0000	0.0000	0.0000	0.0000	0.0000	0.0000
Triadecanes_3*	0.0000	0.0000	0.0000	0.0000	0.0000	0.0000
Tetradecanes_3*	0.0000	0.0000	0.0000	0.0000	0.0000	0.0000
Pentadecanes_3*	0.0000	0.0000	0.0000	0.0000	0.0000	0.0000
Hexadecanes_3*	0.0000	0.0000	0.0000	0.0000	0.0000	0.0000
Heptadecanes_3*	0.0000	0.0000	0.0000	0.0000	0.0000	0.0000
Octadecanes_3*	0.0000	0.0000	0.0000	0.0000	0.0000	0.0000
Nonadecanes_3*	0.0000	0.0000	0.0000	0.0000	0.0000	0.0000
eicosanes_3*	0.0000	0.0000	0.0000	0.0000	0.0000	0.0000
Heneicosanes_3*	0.0000	0.0000	0.0000	0.0000	0.0000	0.0000
Dodocosanes_3*	0.0000	0.0000	0.0000	0.0000	0.0000	0.0000
Triacosanes_3*	0.0000	0.0000	0.0000	0.0000	0.0000	0.0000
Tetracosanes_3*	0.0000	0.0000	0.0000	0.0000	0.0000	0.0000
Pentacosanes_3*	0.0000	0.0000	0.0000	0.0000	0.0000	0.0000
Hexacosanes_3*	0.0000	0.0000	0.0000	0.0000	0.0000	0.0000
Heptacosanes_3*	0.0000	0.0000	0.0000	0.0000	0.0000	0.0000
Octacosanes_3*	0.0000	0.0000	0.0000	0.0000	0.0000	0.0000
Nonacosanes_3*	0.0000	0.0000	0.0000	0.0000	0.0000	0.0000
Triacontanes*	0.0000	0.0000	0.0000	0.0000	0.0000	0.0000
C31+_2*	0.0000	0.0000	0.0000	0.0000	0.0000	0.0000
H2O	6745.9966	1.0000	121529.8059	1.0000	8338.2828	1.0000
DTRM-G	0.0000	0.0000	0.0000	0.0000	0.0000	0.0000
NC30*	0.0000	0.0000	0.0000	0.0000	0.0000	0.0000
n-Nonane	0.0000	0.0000	0.0000	0.0000	0.0000	0.0000
n-Decane	0.0000	0.0000	0.0000	0.0000	0.0000	0.0000
NC31-35*	0.0000	0.0000	0.0000	0.0000	0.0000	0.0000
TexaTherm	0.0000	0.0000	0.0000	0.0000	0.0000	0.0000
NC31-35_1*	0.0000	0.0000	0.0000	0.0000	0.0000	0.0000
CO	0.0000	0.0000	0.0000	0.0000	0.0000	0.0000
Total	6746.0036	1.0000	121530.1170	1.0000	8338.3086	1.0000

* Specified by user.

Material Stream: to oil PL

Fluid Package: Peng Robinson
Property Package: Peng-Robinson

CONDITIONS

	Overall	Liquid Phase			
Vapour / Phase Fraction	0.0000	1.0000			
Temperature: (F)	76.27	76.27			
Pressure: (psig)	30.00	30.00			
Molar Flow (MMSCFD)	144.6	144.6			
Mass Flow (lb/hr)	2.381e+006	2.381e+006			
Std Ideal Liq Vol Flow (barrel/day)	2.054e+005	2.054e+005			
Molar Enthalpy (Btu/lbmole)	-1.314e+005	-1.314e+005			
Molar Entropy (Btu/lbmole-F)	52.50	52.50			
Heat Flow (Btu/hr)	-2.087e+009	-2.087e+009			
Liq Vol Flow @Std Cond (barrel/day)	2.048e+005 *	2.048e+005			

PROPERTIES

	Overall	Liquid Phase			
Molecular Weight	149.9	149.9			
Molar Density (lbmole/ft3)	0.3283	0.3283			
Mass Density (lb/ft3)	49.23	49.23			
Act. Volume Flow (barrel/day)	2.067e+005	2.067e+005			
Mass Enthalpy (Btu/lb)	-876.5	-876.5			
Mass Entropy (Btu/lb-F)	0.3501	0.3501			
Heat Capacity (Btu/lbmole-F)	69.54	69.54			
Mass Heat Capacity (Btu/lb-F)	0.4638	0.4638			
LHV Molar Basis (Std) (Btu/SCF)	---	---			
LHV Mass Basis (Std) (Btu/lb)	---	---			
Phase Fraction [Vol. Basis]	0.0000	1.000			
Phase Fraction [Mass Basis]	0.0000	1.000			
Partial Pressure of CO2 (psig)	-14.70	---			
Cost Based on Flow (Cost/s)	0.0000	0.0000			
Act. Gas Flow (ACFM)	---	---			
Avg. Liq. Density (lbmole/ft3)	0.3304	0.3304			
Specific Heat (Btu/lbmole-F)	69.54	69.54			
Std. Gas Flow (MMSCFD)	144.3	144.3			
Std. Ideal Liq. Mass Density (lb/ft3)	49.54	49.54			
Act. Liq. Flow (USGPM)	6030	6030			
Z Factor	2.367e-002	2.367e-002			
Watson K	11.84	11.84			
User Property	---	---			
Cp/(Cp - R)	1.029	1.029			
Cp/Cv	1.215	1.215			
Heat of Vap. (Btu/lbmole)	7.489e+004	---			
Kinematic Viscosity (cSt)	2.544	2.544			
Liq. Mass Density (Std. Cond) (lb/ft3)	49.70	49.70			
Liq. Vol. Flow (Std. Cond) (barrel/day)	2.048e+005	2.048e+005			
Liquid Fraction	1.000	1.000			
Molar Volume (ft3/lbmole)	3.046	3.046			
Mass Heat of Vap. (Btu/lb)	499.4	---			
Phase Fraction [Molar Basis]	0.0000	1.0000			
Surface Tension (dyne/cm)	22.75	22.75			
Thermal Conductivity (Btu/hr-ft-F)	6.971e-002	6.971e-002			
Viscosity (cP)	2.006	2.006			
Cv (Semi-Ideal) (Btu/lbmole-F)	67.56	67.56			
Mass Cv (Semi-Ideal) (Btu/lb-F)	0.4506	0.4506			

Licensed to: EXXONMOBIL TECHNICAL COM
* Specified by user.

Material Stream: to oil PL (continued)

Fluid Package: Peng Robinson
Property Package: Peng-Robinson

PROPERTIES

		Overall	Liquid Phase			
Cv	(Btu/lbmole-F)	57.22	57.22			
Mass Cv	(Btu/lb-F)	0.3816	0.3816			
Cv (Ent. Method)	(Btu/lbmole-F)	61.08	61.08			
Mass Cv (Ent. Method)	(Btu/lb-F)	0.4073	0.4073			
Cp/Cv (Ent. Method)		1.139	1.139			
Liq. Vol. Flow - Sum(Std. Cond)	(barrel/day)	2.048e+005	2.048e+005			
Partial Pressure of H2S	(psig)	-14.70	---			
Reid VP at 37.8 C	(psig)	-6.536	-6.536			
True VP at 37.8 C	(psig)	-4.787	-4.787			
Viscosity Index		13.71	---			
HHV Molar Basis (Std)	(Btu/SCF)	---	---			
HHV Mass Basis (Std)	(Btu/lb)	---	---			
CO2 Loading		---	---			
CO2 App ML Con	(lbmole/ft3)	2.275e-006	2.275e-006			
CO2 App WT Con	(lbmol/lb)	4.621e-008	4.621e-008			
Phase Fraction [Act. Vol. Basis]		0.0000	1.000			
Mass Exergy	(Btu/lb)	0.1252	---			
Ideal Gas Cp/Cv		1.037	1.037			
Ideal Gas Cp	(Btu/lbmole-F)	55.52	55.52			
Mass Ideal Gas Cp	(Btu/lb-F)	0.3703	0.3703			
Bubble Point Pressure	(psig)	-7.725	---			

COMPOSITION

Overall Phase

Vapour Fraction 0.0000

COMPONENTS	MOLAR FLOW (lbmole/hr)	MOLE FRACTION	MASS FLOW (lb/hr)	MASS FRACTION	LIQUID VOLUME FLOW (barrel/day)	LIQUID VOLUME FRACTION
Oxygen	0.0000	0.0000	0.0000	0.0000	0.0000	0.0000
H2S	0.0000	0.0000	0.0000	0.0000	0.0000	0.0000
Nitrogen	0.0000	0.0000	0.0001	0.0000	0.0000	0.0000
CO2	0.1100	0.0000	4.8419	0.0000	0.4017	0.0000
Methane	0.0409	0.0000	0.6565	0.0000	0.1501	0.0000
Ethane	32.1353	0.0020	966.3046	0.0004	186.0241	0.0009
Propane	158.9571	0.0100	7009.5313	0.0029	947.2731	0.0046
i-Butane	183.5099	0.0116	10666.3297	0.0045	1299.6405	0.0063
n-Butane	746.4981	0.0470	43389.4586	0.0182	5094.1045	0.0248
22-Mpropane	9.3641	0.0006	675.6324	0.0003	77.6746	0.0004
i-Pentane	601.6886	0.0379	43412.4353	0.0182	4768.0012	0.0232
n-Pentane	857.3126	0.0540	61855.9626	0.0260	6725.8341	0.0327
22-Mbutane	8.6418	0.0005	744.7305	0.0003	78.1436	0.0004
Cyclopentane	0.0000	0.0000	0.0000	0.0000	0.0000	0.0000
23-Mbutane	112.7049	0.0071	9712.6743	0.0041	999.8290	0.0049
2-Mpentane	312.8006	0.0197	26956.5032	0.0113	2811.5283	0.0137
3-Mpentane	184.6756	0.0116	15914.9524	0.0067	1632.1221	0.0079
n-Hexane	472.3021	0.0297	40702.0068	0.0171	4205.7235	0.0205
Hexanes*	0.0000	0.0000	0.0000	0.0000	0.0000	0.0000
Mcyclopentan	378.2674	0.0238	31835.7052	0.0134	2898.5271	0.0141
Benzene	382.0394	0.0241	29841.0942	0.0125	2316.1724	0.0113
Cyclohexane	847.9160	0.0534	71360.6097	0.0300	6249.8404	0.0304
2-Mhexane	150.6477	0.0095	15095.6508	0.0063	1516.6292	0.0074
3-Mhexane	136.1051	0.0086	13638.4125	0.0057	1353.0291	0.0066

Licensed to: EXXONMOBIL TECHNICAL COM
* Specified by user.

Material Stream: to oil PL (continued)

Fluid Package: Peng Robinson
Property Package: Peng-Robinson

COMPOSITION

Overall Phase (continued)

Vapour Fraction 0.0000

COMPONENTS	MOLAR FLOW (lbmole/hr)	MOLE FRACTION	MASS FLOW (lb/hr)	MASS FRACTION	LIQUID VOLUME FLOW (barrel/day)	LIQUID VOLUME FRACTION
224-Mpentane	0.0000	0.0000	0.0000	0.0000	0.0000	0.0000
n-Heptane	594.2395	0.0374	59545.7702	0.0250	5936.4856	0.0289
Heptanes*	32.2656	0.0020	3097.4956	0.0013	292.3272	0.0014
Mcyclohexane	932.4583	0.0587	91557.1469	0.0385	8116.2063	0.0395
Toluene	560.3945	0.0353	51635.2008	0.0217	4063.7120	0.0198
n-Octane	1038.5391	0.0654	118634.4052	0.0498	11516.1584	0.0561
Octanes*	42.0125	0.0026	4495.3354	0.0019	411.7876	0.0020
E-Benzene	29.1273	0.0018	3092.3302	0.0013	243.3708	0.0012
m-Xylene	131.9185	0.0083	14005.2613	0.0059	1106.2404	0.0054
o-Xylene	73.7332	0.0046	7827.9581	0.0033	606.9246	0.0030
p-Xylene	131.8958	0.0083	14002.8541	0.0059	1109.4456	0.0054
Nonanes*	18.2156	0.0011	2204.0831	0.0009	196.9064	0.0010
Decanes*	6.9916	0.0004	936.8746	0.0004	82.1992	0.0004
Undecanes_3*	640.2113	0.0403	94111.0574	0.0395	8137.3418	0.0396
Dodecanes_3*	452.2888	0.0285	72818.5045	0.0306	6208.2339	0.0302
Triadecanes_3*	482.2041	0.0304	84385.7261	0.0354	7107.6941	0.0346
Tetradecanes_3*	404.7312	0.0255	76898.9337	0.0323	6403.7568	0.0312
Pentadecanes_3*	356.1744	0.0224	73371.9361	0.0308	6044.8627	0.0294
Hexadecanes_3*	253.1005	0.0159	56188.3116	0.0236	4585.5858	0.0223
Heptadecanes_3*	212.1758	0.0134	50285.6702	0.0211	4069.3468	0.0198
Octadecanes_3*	200.0501	0.0126	50212.5729	0.0211	4034.4701	0.0196
Nonadecanes_3*	186.4094	0.0117	49025.6733	0.0206	3915.6756	0.0191
eicosanes_3*	122.4547	0.0077	33675.0329	0.0141	2674.1702	0.0130
Heneicosanes_3*	122.4542	0.0077	35634.1844	0.0150	2809.5676	0.0137
Dodocosanes_3*	98.8121	0.0062	29643.6198	0.0125	2327.4088	0.0113
Triacosanes_3*	87.9003	0.0055	27424.8908	0.0115	2141.9538	0.0104
Tetracosanes_3*	75.3215	0.0047	24404.1500	0.0102	1896.6438	0.0092
Pentacosanes_3*	64.4097	0.0041	21706.0649	0.0091	1678.6033	0.0082
Hexacosanes_3*	61.2271	0.0039	21368.2536	0.0090	1644.8783	0.0080
Heptacosanes_3*	59.7116	0.0038	21496.1637	0.0090	1647.8847	0.0080
Octacosanes_3*	54.8619	0.0035	20408.6251	0.0086	1558.0363	0.0076
Nonacosanes_3*	48.6483	0.0031	18583.6336	0.0078	1413.9665	0.0069
Triacontanes*	0.0000	0.0000	0.0000	0.0000	0.0000	0.0000
C31+_2*	871.4251	0.0549	457498.1963	0.1921	33590.5585	0.1635
H2O	1.1287	0.0001	20.3332	0.0000	1.3951	0.0000
DTRM-G	0.0000	0.0000	0.0000	0.0000	0.0000	0.0000
NC30*	50.1638	0.0032	22924.8463	0.0096	1707.9491	0.0083
n-Nonane	921.3905	0.0580	118176.6221	0.0496	11234.8786	0.0547
n-Decane	885.0392	0.0557	125927.7992	0.0529	11767.9616	0.0573
NC31-35*	0.0000	0.0000	0.0000	0.0000	0.0000	0.0000
TexaTherm	0.0000	0.0000	0.0000	0.0000	0.0000	0.0000
NC31-35_1*	0.0000	0.0000	0.0000	0.0000	0.0000	0.0000
CO	0.0000	0.0000	0.0000	0.0000	0.0000	0.0000
Total	15879.8030	1.0000	2.381009010e+06	1.0000	205445.2364	1.0000

* Specified by user.

Material Stream: to oil PL (continued)

Fluid Package: Peng Robinson
Property Package: Peng-Robinson

COMPOSITION

Liquid Phase

Phase Fraction 1.000

COMPONENTS	MOLAR FLOW (lbmole/hr)	MOLE FRACTION	MASS FLOW (lb/hr)	MASS FRACTION	LIQUID VOLUME FLOW (barrel/day)	LIQUID VOLUME FRACTION
Oxygen	0.0000	0.0000	0.0000	0.0000	0.0000	0.0000
H2S	0.0000	0.0000	0.0000	0.0000	0.0000	0.0000
Nitrogen	0.0000	0.0000	0.0001	0.0000	0.0000	0.0000
CO2	0.1100	0.0000	4.8419	0.0000	0.4017	0.0000
Methane	0.0409	0.0000	0.6565	0.0000	0.1501	0.0000
Ethane	32.1353	0.0020	966.3046	0.0004	186.0241	0.0009
Propane	158.9571	0.0100	7009.5313	0.0029	947.2731	0.0046
i-Butane	183.5099	0.0116	10666.3297	0.0045	1299.6405	0.0063
n-Butane	746.4981	0.0470	43389.4586	0.0182	5094.1045	0.0248
22-Mpropane	9.3641	0.0006	675.6324	0.0003	77.6746	0.0004
i-Pentane	601.6886	0.0379	43412.4353	0.0182	4768.0012	0.0232
n-Pentane	857.3126	0.0540	61855.9626	0.0260	6725.8341	0.0327
22-Mbutane	8.6418	0.0005	744.7305	0.0003	78.1436	0.0004
Cyclopentane	0.0000	0.0000	0.0000	0.0000	0.0000	0.0000
23-Mbutane	112.7049	0.0071	9712.6743	0.0041	999.8290	0.0049
2-Mpentane	312.8006	0.0197	26956.5032	0.0113	2811.5283	0.0137
3-Mpentane	184.6756	0.0116	15914.9524	0.0067	1632.1221	0.0079
n-Hexane	472.3021	0.0297	40702.0068	0.0171	4205.7235	0.0205
Hexanes*	0.0000	0.0000	0.0000	0.0000	0.0000	0.0000
Mcyclopentan	378.2674	0.0238	31835.7052	0.0134	2898.5271	0.0141
Benzene	382.0394	0.0241	29841.0942	0.0125	2316.1724	0.0113
Cyclohexane	847.9160	0.0534	71360.6097	0.0300	6249.8404	0.0304
2-Mhexane	150.6477	0.0095	15095.6508	0.0063	1516.6292	0.0074
3-Mhexane	136.1051	0.0086	13638.4125	0.0057	1353.0291	0.0066
224-Mpentane	0.0000	0.0000	0.0000	0.0000	0.0000	0.0000
n-Heptane	594.2395	0.0374	59545.7702	0.0250	5936.4856	0.0289
Heptanes*	32.2656	0.0020	3097.4956	0.0013	292.3272	0.0014
Mcyclohexane	932.4583	0.0587	91557.1469	0.0385	8116.2063	0.0395
Toluene	560.3945	0.0353	51635.2008	0.0217	4063.7120	0.0198
n-Octane	1038.5391	0.0654	118634.4052	0.0498	11516.1584	0.0561
Octanes*	42.0125	0.0026	4495.3354	0.0019	411.7876	0.0020
E-Benzene	29.1273	0.0018	3092.3302	0.0013	243.3708	0.0012
m-Xylene	131.9185	0.0083	14005.2613	0.0059	1106.2404	0.0054
o-Xylene	73.7332	0.0046	7827.9581	0.0033	606.9246	0.0030
p-Xylene	131.8958	0.0083	14002.8541	0.0059	1109.4456	0.0054
Nonanes*	18.2156	0.0011	2204.0831	0.0009	196.9064	0.0010
Decanes*	6.9916	0.0004	936.8746	0.0004	82.1992	0.0004
Undecanes_3*	640.2113	0.0403	94111.0574	0.0395	8137.3418	0.0396
Dodecanes_3*	452.2888	0.0285	72818.5045	0.0306	6208.2339	0.0302
Triadecanes_3*	482.2041	0.0304	84385.7261	0.0354	7107.6941	0.0346
Tetradecanes_3*	404.7312	0.0255	76898.9337	0.0323	6403.7568	0.0312
Pentadecanes_3*	356.1744	0.0224	73371.9361	0.0308	6044.8627	0.0294
Hexadecanes_3*	253.1005	0.0159	56188.3116	0.0236	4585.5858	0.0223
Heptadecanes_3*	212.1758	0.0134	50285.6702	0.0211	4069.3468	0.0198
Octadecanes_3*	200.0501	0.0126	50212.5729	0.0211	4034.4701	0.0196
Nonadecanes_3*	186.4094	0.0117	49025.6733	0.0206	3915.6756	0.0191
eicosanes_3*	122.4547	0.0077	33675.0329	0.0141	2674.1702	0.0130
Heneicosanes_3*	122.4542	0.0077	35634.1844	0.0150	2809.5676	0.0137

* Specified by user.

Material Stream: to oil PL (continued)

Fluid Package: Peng Robinson
Property Package: Peng-Robinson

COMPOSITION

Liquid Phase (continued)

Phase Fraction 1.000

COMPONENTS	MOLAR FLOW (lbmole/hr)	MOLE FRACTION	MASS FLOW (lb/hr)	MASS FRACTION	LIQUID VOLUME FLOW (barrel/day)	LIQUID VOLUME FRACTION
Dodocosanes_3*	98.8121	0.0062	29643.6198	0.0125	2327.4088	0.0113
Triacosanes_3*	87.9003	0.0055	27424.8908	0.0115	2141.9538	0.0104
Tetracosanes_3*	75.3215	0.0047	24404.1500	0.0102	1896.6438	0.0092
Pentacosanes_3*	64.4097	0.0041	21706.0649	0.0091	1678.6033	0.0082
Hexacosanes_3*	61.2271	0.0039	21368.2536	0.0090	1644.8783	0.0080
Heptacosanes_3*	59.7116	0.0038	21496.1637	0.0090	1647.8847	0.0080
Octacosanes_3*	54.8619	0.0035	20408.6251	0.0086	1558.0363	0.0076
Nonacosanes_3*	48.6483	0.0031	18583.6336	0.0078	1413.9665	0.0069
Triacontanes*	0.0000	0.0000	0.0000	0.0000	0.0000	0.0000
C31+_2*	871.4251	0.0549	457498.1963	0.1921	33590.5585	0.1635
H2O	1.1287	0.0001	20.3332	0.0000	1.3951	0.0000
DTRM-G	0.0000	0.0000	0.0000	0.0000	0.0000	0.0000
NC30*	50.1638	0.0032	22924.8463	0.0096	1707.9491	0.0083
n-Nonane	921.3905	0.0580	118176.6221	0.0496	11234.8786	0.0547
n-Decane	885.0392	0.0557	125927.7992	0.0529	11767.9616	0.0573
NC31-35*	0.0000	0.0000	0.0000	0.0000	0.0000	0.0000
TexaTherm	0.0000	0.0000	0.0000	0.0000	0.0000	0.0000
NC31-35_1*	0.0000	0.0000	0.0000	0.0000	0.0000	0.0000
CO	0.0000	0.0000	0.0000	0.0000	0.0000	0.0000
Total	15879.8030	1.0000	2.381009010e+06	1.0000	205445.2364	1.0000

* Specified by user.

Material Stream: Gas int

Fluid Package: Peng Robinson
Property Package: Peng-Robinson

CONDITIONS

	Overall	Vapour Phase	Liquid Phase		
Vapour / Phase Fraction	0.8892	0.8892	0.1108		
Temperature: (F)	50.00	50.00	50.00		
Pressure: (psig)	1150 *	1150	1150		
Molar Flow (MMSCFD)	200.0	177.8	22.16		
Mass Flow (lb/hr)	5.045e+005	4.251e+005	7.939e+004		
Std Ideal Liq Vol Flow (barrel/day)	9.515e+004	8.260e+004	1.255e+004		
Molar Enthalpy (Btu/lbmole)	-3.681e+004	-3.581e+004	-4.484e+004		
Molar Entropy (Btu/lbmole-F)	33.40	34.06	28.17		
Heat Flow (Btu/hr)	-8.083e+008	-6.993e+008	-1.091e+008		
Liq Vol Flow @Std Cond (barrel/day)	3.538e+007 *	3.148e+007	1.138e+006		

PROPERTIES

	Overall	Vapour Phase	Liquid Phase		
Molecular Weight	22.97	21.77	32.63		
Molar Density (lbmole/ft3)	0.3565	0.3361	0.6950		
Mass Density (lb/ft3)	8.189	7.316	22.68		
Act. Volume Flow (barrel/day)	2.633e+005	2.484e+005	1.496e+004		
Mass Enthalpy (Btu/lb)	-1602	-1645	-1374		
Mass Entropy (Btu/lb-F)	1.454	1.565	0.8632		
Heat Capacity (Btu/lbmole-F)	19.69	18.90	25.97		
Mass Heat Capacity (Btu/lb-F)	0.8570	0.8684	0.7960		
LHV Molar Basis (Std) (Btu/SCF)	---	---	---		
LHV Mass Basis (Std) (Btu/lb)	---	---	---		
Phase Fraction [Vol. Basis]	0.8681	0.8681	0.1319		
Phase Fraction [Mass Basis]	0.8426	0.8426	0.1574		
Partial Pressure of CO2 (psig)	-12.67	---	---		
Cost Based on Flow (Cost/s)	0.0000	0.0000	0.0000		
Act. Gas Flow (ACFM)	968.3	968.3	---		
Avg. Liq. Density (lbmole/ft3)	0.9866	1.011	0.8289		
Specific Heat (Btu/lbmole-F)	19.69	18.90	25.97		
Std. Gas Flow (MMSCFD)	199.6	177.5	22.12		
Std. Ideal Liq. Mass Density (lb/ft3)	22.66	22.00	27.05		
Act. Liq. Flow (USGPM)	436.5	---	436.5		
Z Factor	---	0.6335	0.3064		
Watson K	17.52	17.83	15.94		
User Property	---	---	---		
Cp/(Cp - R)	1.112	1.117	1.083		
Cp/Cv	2.058	2.200	1.083		
Heat of Vap. (Btu/lbmole)	3063	---	---		
Kinematic Viscosity (cSt)	---	0.1314	0.1644		
Liq. Mass Density (Std. Cond) (lb/ft3)	6.095e-002	5.773e-002	0.2983		
Liq. Vol. Flow (Std. Cond) (barrel/day)	3.538e+007	3.148e+007	1.138e+006		
Liquid Fraction	0.1108	0.0000	1.000		
Molar Volume (ft3/lbmole)	2.805	2.975	1.439		
Mass Heat of Vap. (Btu/lb)	133.3	---	---		
Phase Fraction [Molar Basis]	0.8892	0.8892	0.1108		
Surface Tension (dyne/cm)	4.610	---	4.610		
Thermal Conductivity (Btu/hr-ft-F)	---	2.373e-002	4.820e-002		
Viscosity (cP)	---	1.540e-002	5.970e-002		
Cv (Semi-Ideal) (Btu/lbmole-F)	17.70	16.92	23.99		
Mass Cv (Semi-Ideal) (Btu/lb-F)	0.7705	0.7771	0.7351		

* Specified by user.

Material Stream: Gas int (continued)

Fluid Package: Peng Robinson
Property Package: Peng-Robinson

PROPERTIES

		Overall	Vapour Phase	Liquid Phase		
Cv	(Btu/lbmole-F)	9.566	8.592	23.99		
Mass Cv	(Btu/lb-F)	0.4164	0.3947	0.7351		
Cv (Ent. Method)	(Btu/lbmole-F)	16.95	8.592	---		
Mass Cv (Ent. Method)	(Btu/lb-F)	0.7381	0.3947	---		
Cp/Cv (Ent. Method)		1.161	2.200	---		
Liq. Vol. Flow - Sum(Std. Cond)	(barrel/day)	3.261e+007	3.148e+007	1.138e+006		
Partial Pressure of H2S	(psig)	-14.70	---	---		
Reid VP at 37.8 C	(psig)	---	---	799.0		
True VP at 37.8 C	(psig)	---	---	1339		
Viscosity Index		---	---	---		
HHV Molar Basis (Std)	(Btu/SCF)	---	---	---		
HHV Mass Basis (Std)	(Btu/lb)	---	---	---		
CO2 Loading		---	---	---		
CO2 App ML Con	(lbmole/ft3)	---	---	1.074e-003		
CO2 App WT Con	(lbmol/lb)	---	---	4.736e-005		
Phase Fraction [Act. Vol. Basis]		0.9432	0.9432	5.683e-002		
Mass Exergy	(Btu/lb)	187.4	---	---		
Ideal Gas Cp/Cv		1.234	1.246	1.171		
Ideal Gas Cp	(Btu/lbmole-F)	10.46	10.07	13.58		
Mass Ideal Gas Cp	(Btu/lb-F)	0.4554	0.4627	0.4161		
Bubble Point Pressure	(psig)	---	---	---		

COMPOSITION

Overall Phase

Vapour Fraction 0.8892

COMPONENTS	MOLAR FLOW (lbmole/hr)	MOLE FRACTION	MASS FLOW (lb/hr)	MASS FRACTION	LIQUID VOLUME FLOW (barrel/day)	LIQUID VOLUME FRACTION
Oxygen	0.0000	0.0000	0.0000	0.0000	0.0000	0.0000
H2S	0.0000	0.0000	0.0000	0.0000	0.0000	0.0000
Nitrogen	351.6050	0.0160	9849.5121	0.0195	836.3662	0.0088
CO2	37.6585	0.0017	1657.3397	0.0033	137.4990	0.0014
Methane	15266.2753	0.6952	244915.3289	0.4855	56013.2964	0.5887
Ethane	3388.3194	0.1543	101886.4259	0.2020	19614.2397	0.2062
Propane	1929.2405	0.0878	85073.7201	0.1686	11496.9236	0.1208
i-Butane	232.7406	0.0106	13527.8149	0.0268	1648.2986	0.0173
n-Butane	534.5917	0.0243	31072.6074	0.0616	3648.0545	0.0383
22-Mpropane	3.9998	0.0002	288.5888	0.0006	33.1778	0.0003
i-Pentane	90.1746	0.0041	6506.1862	0.0129	714.5764	0.0075
n-Pentane	81.6628	0.0037	5892.0547	0.0117	640.6655	0.0067
22-Mbutane	0.3208	0.0000	27.6444	0.0001	2.9007	0.0000
Cyclopentane	0.0000	0.0000	0.0000	0.0000	0.0000	0.0000
23-Mbutane	2.9560	0.0001	254.7445	0.0005	26.2236	0.0003
2-Mpentane	7.8254	0.0004	674.3772	0.0013	70.3367	0.0007
3-Mpentane	3.7601	0.0002	324.0344	0.0006	33.2306	0.0003
n-Hexane	6.8570	0.0003	590.9234	0.0012	61.0599	0.0006
Hexanes*	0.0000	0.0000	0.0000	0.0000	0.0000	0.0000
Mcyclopentan	4.9210	0.0002	414.1595	0.0008	37.7077	0.0004
Benzene	4.5555	0.0002	355.8327	0.0007	27.6186	0.0003
Cyclohexane	7.6113	0.0003	640.5642	0.0013	56.1013	0.0006
2-Mhexane	0.4967	0.0000	49.7731	0.0001	5.0006	0.0001
3-Mhexane	0.4098	0.0000	41.0609	0.0001	4.0735	0.0000

* Specified by user.

Material Stream: Gas int (continued)

Fluid Package: Peng Robinson
Property Package: Peng-Robinson

COMPOSITION

Overall Phase (continued)

Vapour Fraction 0.8892

COMPONENTS	MOLAR FLOW (lbmole/hr)	MOLE FRACTION	MASS FLOW (lb/hr)	MASS FRACTION	LIQUID VOLUME FLOW (barrel/day)	LIQUID VOLUME FRACTION
224-Mpentane	0.0000	0.0000	0.0000	0.0000	0.0000	0.0000
n-Heptane	0.5718	0.0000	57.2991	0.0001	5.7125	0.0001
Heptanes*	0.7469	0.0000	71.6995	0.0001	6.7667	0.0001
Mcyclohexane	1.8911	0.0001	185.6896	0.0004	16.4607	0.0002
Toluene	0.6297	0.0000	58.0177	0.0001	4.5660	0.0000
n-Octane	0.0323	0.0000	3.6902	0.0000	0.3582	0.0000
Octanes*	0.2709	0.0000	28.9874	0.0001	2.6553	0.0000
E-Benzene	0.0020	0.0000	0.2145	0.0000	0.0169	0.0000
m-Xylene	0.0059	0.0000	0.6248	0.0000	0.0494	0.0000
o-Xylene	0.0024	0.0000	0.2541	0.0000	0.0197	0.0000
p-Xylene	0.0060	0.0000	0.6318	0.0000	0.0501	0.0000
Nonanes*	0.0166	0.0000	2.0036	0.0000	0.1790	0.0000
Decanes*	0.0008	0.0000	0.1030	0.0000	0.0090	0.0000
Undecanes_3*	0.0000	0.0000	0.0032	0.0000	0.0003	0.0000
Dodecanes_3*	0.0000	0.0000	0.0000	0.0000	0.0000	0.0000
Triadecanes_3*	0.0000	0.0000	0.0000	0.0000	0.0000	0.0000
Tetradecanes_3*	0.0000	0.0000	0.0000	0.0000	0.0000	0.0000
Pentadecanes_3*	0.0000	0.0000	0.0000	0.0000	0.0000	0.0000
Hexadecanes_3*	0.0000	0.0000	0.0000	0.0000	0.0000	0.0000
Heptadecanes_3*	0.0000	0.0000	0.0000	0.0000	0.0000	0.0000
Octadecanes_3*	0.0000	0.0000	0.0000	0.0000	0.0000	0.0000
Nonadecanes_3*	0.0000	0.0000	0.0000	0.0000	0.0000	0.0000
eicosanes_3*	0.0000	0.0000	0.0000	0.0000	0.0000	0.0000
Heneicosanes_3*	0.0000	0.0000	0.0000	0.0000	0.0000	0.0000
Dodocosanes_3*	0.0000	0.0000	0.0000	0.0000	0.0000	0.0000
Triacosanes_3*	0.0000	0.0000	0.0000	0.0000	0.0000	0.0000
Tetracosanes_3*	0.0000	0.0000	0.0000	0.0000	0.0000	0.0000
Pentacosanes_3*	0.0000	0.0000	0.0000	0.0000	0.0000	0.0000
Hexacosanes_3*	0.0000	0.0000	0.0000	0.0000	0.0000	0.0000
Heptacosanes_3*	0.0000	0.0000	0.0000	0.0000	0.0000	0.0000
Octacosanes_3*	0.0000	0.0000	0.0000	0.0000	0.0000	0.0000
Nonacosanes_3*	0.0000	0.0000	0.0000	0.0000	0.0000	0.0000
Triacontanes*	0.0000	0.0000	0.0000	0.0000	0.0000	0.0000
C31+_2*	0.0000	0.0000	0.0000	0.0000	0.0000	0.0000
H2O	0.7806	0.0000	14.0630	0.0000	0.9649	0.0000
DTRM-G	0.0000	0.0000	0.0000	0.0000	0.0000	0.0000
NC30*	0.0000	0.0000	0.0000	0.0000	0.0000	0.0000
n-Nonane	0.0000	0.0000	0.0000	0.0000	0.0000	0.0000
n-Decane	0.0000	0.0000	0.0000	0.0000	0.0000	0.0000
NC31-35*	0.0000	0.0000	0.0000	0.0000	0.0000	0.0000
TexaTherm	0.0000	0.0000	0.0000	0.0000	0.0000	0.0000
NC31-35_1*	0.0000	0.0000	0.0000	0.0000	0.0000	0.0000
CO	0.0000	0.0000	0.0000	0.0000	0.0000	0.0000
Total	21960.9387	1.0000	504465.9746	1.0000	95145.1595	1.0000

* Specified by user.

Material Stream: Gas int (continued)

Fluid Package: Peng Robinson
Property Package: Peng-Robinson

COMPOSITION

Vapour Phase

Phase Fraction 0.8892

COMPONENTS	MOLAR FLOW (lbmole/hr)	MOLE FRACTION	MASS FLOW (lb/hr)	MASS FRACTION	LIQUID VOLUME FLOW (barrel/day)	LIQUID VOLUME FRACTION
Oxygen	0.0000	0.0000	0.0000	0.0000	0.0000	0.0000
H2S	0.0000	0.0000	0.0000	0.0000	0.0000	0.0000
Nitrogen	338.4474	0.0173	9480.9262	0.0223	805.0679	0.0097
CO2	33.8988	0.0017	1491.8739	0.0035	123.7713	0.0015
Methane	14250.9520	0.7298	228626.5994	0.5378	52287.9868	0.6330
Ethane	2883.8820	0.1477	86718.0450	0.2040	16694.1622	0.2021
Propane	1443.4583	0.0739	63652.1802	0.1497	8602.0013	0.1041
i-Butane	151.9342	0.0078	8831.0228	0.0208	1076.0173	0.0130
n-Butane	325.8904	0.0167	18942.0564	0.0446	2223.8769	0.0269
22-Mpropane	2.3109	0.0001	166.7314	0.0004	19.1684	0.0002
i-Pentane	44.9516	0.0023	3243.2999	0.0076	356.2126	0.0043
n-Pentane	37.5720	0.0019	2710.8555	0.0064	294.7616	0.0036
22-Mbutane	0.1266	0.0000	10.9112	0.0000	1.1449	0.0000
Cyclopentane	0.0000	0.0000	0.0000	0.0000	0.0000	0.0000
23-Mbutane	1.1029	0.0001	95.0450	0.0002	9.7840	0.0001
2-Mpentane	2.8258	0.0001	243.5235	0.0006	25.3992	0.0003
3-Mpentane	1.3053	0.0001	112.4871	0.0003	11.5359	0.0001
n-Hexane	2.2141	0.0001	190.8030	0.0004	19.7156	0.0002
Hexanes*	0.0000	0.0000	0.0000	0.0000	0.0000	0.0000
Mcyclopentan	1.5442	0.0001	129.9604	0.0003	11.8324	0.0001
Benzene	1.4578	0.0001	113.8696	0.0003	8.8382	0.0001
Cyclohexane	2.2998	0.0001	193.5548	0.0005	16.9517	0.0002
2-Mhexane	0.1200	0.0000	12.0250	0.0000	1.2081	0.0000
3-Mhexane	0.0971	0.0000	9.7250	0.0000	0.9648	0.0000
224-Mpentane	0.0000	0.0000	0.0000	0.0000	0.0000	0.0000
n-Heptane	0.1230	0.0000	12.3254	0.0000	1.2288	0.0000
Heptanes*	0.1714	0.0000	16.4513	0.0000	1.5526	0.0000
Mcyclohexane	0.4235	0.0000	41.5844	0.0001	3.6863	0.0000
Toluene	0.1340	0.0000	12.3503	0.0000	0.9720	0.0000
n-Octane	0.0044	0.0000	0.5055	0.0000	0.0491	0.0000
Octanes*	0.0438	0.0000	4.6877	0.0000	0.4294	0.0000
E-Benzene	0.0002	0.0000	0.0263	0.0000	0.0021	0.0000
m-Xylene	0.0007	0.0000	0.0779	0.0000	0.0062	0.0000
o-Xylene	0.0003	0.0000	0.0309	0.0000	0.0024	0.0000
p-Xylene	0.0007	0.0000	0.0794	0.0000	0.0063	0.0000
Nonanes*	0.0017	0.0000	0.2044	0.0000	0.0183	0.0000
Decanes*	0.0001	0.0000	0.0068	0.0000	0.0006	0.0000
Undecanes_3*	0.0000	0.0000	0.0001	0.0000	0.0000	0.0000
Dodecanes_3*	0.0000	0.0000	0.0000	0.0000	0.0000	0.0000
Triadecanes_3*	0.0000	0.0000	0.0000	0.0000	0.0000	0.0000
Tetradecanes_3*	0.0000	0.0000	0.0000	0.0000	0.0000	0.0000
Pentadecanes_3*	0.0000	0.0000	0.0000	0.0000	0.0000	0.0000
Hexadecanes_3*	0.0000	0.0000	0.0000	0.0000	0.0000	0.0000
Heptadecanes_3*	0.0000	0.0000	0.0000	0.0000	0.0000	0.0000
Octadecanes_3*	0.0000	0.0000	0.0000	0.0000	0.0000	0.0000
Nonadecanes_3*	0.0000	0.0000	0.0000	0.0000	0.0000	0.0000
eicosanes_3*	0.0000	0.0000	0.0000	0.0000	0.0000	0.0000
Heneicosanes_3*	0.0000	0.0000	0.0000	0.0000	0.0000	0.0000

Licensed to: EXXONMOBIL TECHNICAL COM
* Specified by user.

Material Stream: Gas int (continued)

Fluid Package: Peng Robinson
Property Package: Peng-Robinson

COMPOSITION

Vapour Phase (continued)

Phase Fraction 0.8892

COMPONENTS	MOLAR FLOW (lbmole/hr)	MOLE FRACTION	MASS FLOW (lb/hr)	MASS FRACTION	LIQUID VOLUME FLOW (barrel/day)	LIQUID VOLUME FRACTION
Dodocosanes_3*	0.0000	0.0000	0.0000	0.0000	0.0000	0.0000
Triacosanes_3*	0.0000	0.0000	0.0000	0.0000	0.0000	0.0000
Tetracosanes_3*	0.0000	0.0000	0.0000	0.0000	0.0000	0.0000
Pentacosanes_3*	0.0000	0.0000	0.0000	0.0000	0.0000	0.0000
Hexacosanes_3*	0.0000	0.0000	0.0000	0.0000	0.0000	0.0000
Heptacosanes_3*	0.0000	0.0000	0.0000	0.0000	0.0000	0.0000
Octacosanes_3*	0.0000	0.0000	0.0000	0.0000	0.0000	0.0000
Nonacosanes_3*	0.0000	0.0000	0.0000	0.0000	0.0000	0.0000
Triacontanes*	0.0000	0.0000	0.0000	0.0000	0.0000	0.0000
C31+_2*	0.0000	0.0000	0.0000	0.0000	0.0000	0.0000
H2O	0.6993	0.0000	12.5983	0.0000	0.8644	0.0000
DTRM-G	0.0000	0.0000	0.0000	0.0000	0.0000	0.0000
NC30*	0.0000	0.0000	0.0000	0.0000	0.0000	0.0000
n-Nonane	0.0000	0.0000	0.0000	0.0000	0.0000	0.0000
n-Decane	0.0000	0.0000	0.0000	0.0000	0.0000	0.0000
NC31-35*	0.0000	0.0000	0.0000	0.0000	0.0000	0.0000
TexaTherm	0.0000	0.0000	0.0000	0.0000	0.0000	0.0000
NC31-35_1*	0.0000	0.0000	0.0000	0.0000	0.0000	0.0000
CO	0.0000	0.0000	0.0000	0.0000	0.0000	0.0000
Total	19527.9943	1.0000	425076.4242	1.0000	82599.2195	1.0000

Liquid Phase

Phase Fraction 0.1108

COMPONENTS	MOLAR FLOW (lbmole/hr)	MOLE FRACTION	MASS FLOW (lb/hr)	MASS FRACTION	LIQUID VOLUME FLOW (barrel/day)	LIQUID VOLUME FRACTION
Oxygen	0.0000	0.0000	0.0000	0.0000	0.0000	0.0000
H2S	0.0000	0.0000	0.0000	0.0000	0.0000	0.0000
Nitrogen	13.1577	0.0054	368.5859	0.0046	31.2983	0.0025
CO2	3.7598	0.0015	165.4658	0.0021	13.7277	0.0011
Methane	1015.3232	0.4173	16288.7294	0.2052	3725.3096	0.2969
Ethane	504.4374	0.2073	15168.3809	0.1911	2920.0775	0.2328
Propane	485.7823	0.1997	21421.5399	0.2698	2894.9223	0.2307
i-Butane	80.8064	0.0332	4696.7921	0.0592	572.2813	0.0456
n-Butane	208.7012	0.0858	12130.5509	0.1528	1424.1776	0.1135
22-Mpropane	1.6889	0.0007	121.8575	0.0015	14.0094	0.0011
i-Pentane	45.2230	0.0186	3262.8863	0.0411	358.3638	0.0286
n-Pentane	44.0909	0.0181	3181.1992	0.0401	345.9039	0.0276
22-Mbutane	0.1942	0.0001	16.7332	0.0002	1.7558	0.0001
Cyclopentane	0.0000	0.0000	0.0000	0.0000	0.0000	0.0000
23-Mbutane	1.8531	0.0008	159.6995	0.0020	16.4396	0.0013
2-Mpentane	4.9996	0.0021	430.8536	0.0054	44.9375	0.0036
3-Mpentane	2.4548	0.0010	211.5473	0.0027	21.6948	0.0017
n-Hexane	4.6430	0.0019	400.1204	0.0050	41.3443	0.0033
Hexanes*	0.0000	0.0000	0.0000	0.0000	0.0000	0.0000
Mcyclopentan	3.3768	0.0014	284.1990	0.0036	25.8753	0.0021
Benzene	3.0977	0.0013	241.9631	0.0030	18.7804	0.0015
Cyclohexane	5.3114	0.0022	447.0094	0.0056	39.1496	0.0031
2-Mhexane	0.3767	0.0002	37.7481	0.0005	3.7925	0.0003
3-Mhexane	0.3127	0.0001	31.3359	0.0004	3.1088	0.0002

* Specified by user.

Material Stream: Gas int (continued)

Fluid Package: Peng Robinson
Property Package: Peng-Robinson

COMPOSITION

Liquid Phase (continued)

Phase Fraction 0.1108

COMPONENTS	MOLAR FLOW (lbmole/hr)	MOLE FRACTION	MASS FLOW (lb/hr)	MASS FRACTION	LIQUID VOLUME FLOW (barrel/day)	LIQUID VOLUME FRACTION
224-Mpentane	0.0000	0.0000	0.0000	0.0000	0.0000	0.0000
n-Heptane	0.4488	0.0002	44.9737	0.0006	4.4837	0.0004
Heptanes*	0.5755	0.0002	55.2482	0.0007	5.2141	0.0004
Mcyclohexane	1.4676	0.0006	144.1052	0.0018	12.7744	0.0010
Toluene	0.4956	0.0002	45.6674	0.0006	3.5940	0.0003
n-Octane	0.0279	0.0000	3.1847	0.0000	0.3091	0.0000
Octanes*	0.2271	0.0001	24.2997	0.0003	2.2259	0.0002
E-Benzene	0.0018	0.0000	0.1882	0.0000	0.0148	0.0000
m-Xylene	0.0052	0.0000	0.5470	0.0000	0.0432	0.0000
o-Xylene	0.0021	0.0000	0.2232	0.0000	0.0173	0.0000
p-Xylene	0.0052	0.0000	0.5524	0.0000	0.0438	0.0000
Nonanes*	0.0149	0.0000	1.7992	0.0000	0.1607	0.0000
Decanes*	0.0007	0.0000	0.0962	0.0000	0.0084	0.0000
Undecanes_3*	0.0000	0.0000	0.0031	0.0000	0.0003	0.0000
Dodecanes_3*	0.0000	0.0000	0.0000	0.0000	0.0000	0.0000
Triadecanes_3*	0.0000	0.0000	0.0000	0.0000	0.0000	0.0000
Tetradecanes_3*	0.0000	0.0000	0.0000	0.0000	0.0000	0.0000
Pentadecanes_3*	0.0000	0.0000	0.0000	0.0000	0.0000	0.0000
Hexadecanes_3*	0.0000	0.0000	0.0000	0.0000	0.0000	0.0000
Heptadecanes_3*	0.0000	0.0000	0.0000	0.0000	0.0000	0.0000
Octadecanes_3*	0.0000	0.0000	0.0000	0.0000	0.0000	0.0000
Nonadecanes_3*	0.0000	0.0000	0.0000	0.0000	0.0000	0.0000
eicosanes_3*	0.0000	0.0000	0.0000	0.0000	0.0000	0.0000
Heneicosanes_3*	0.0000	0.0000	0.0000	0.0000	0.0000	0.0000
Dodocosanes_3*	0.0000	0.0000	0.0000	0.0000	0.0000	0.0000
Triacosanes_3*	0.0000	0.0000	0.0000	0.0000	0.0000	0.0000
Tetracosanes_3*	0.0000	0.0000	0.0000	0.0000	0.0000	0.0000
Pentacosanes_3*	0.0000	0.0000	0.0000	0.0000	0.0000	0.0000
Hexacosanes_3*	0.0000	0.0000	0.0000	0.0000	0.0000	0.0000
Heptacosanes_3*	0.0000	0.0000	0.0000	0.0000	0.0000	0.0000
Octacosanes_3*	0.0000	0.0000	0.0000	0.0000	0.0000	0.0000
Nonacosanes_3*	0.0000	0.0000	0.0000	0.0000	0.0000	0.0000
Triacontanes*	0.0000	0.0000	0.0000	0.0000	0.0000	0.0000
C31+_2*	0.0000	0.0000	0.0000	0.0000	0.0000	0.0000
H2O	0.0813	0.0000	1.4647	0.0000	0.1005	0.0000
DTRM-G	0.0000	0.0000	0.0000	0.0000	0.0000	0.0000
NC30*	0.0000	0.0000	0.0000	0.0000	0.0000	0.0000
n-Nonane	0.0000	0.0000	0.0000	0.0000	0.0000	0.0000
n-Decane	0.0000	0.0000	0.0000	0.0000	0.0000	0.0000
NC31-35*	0.0000	0.0000	0.0000	0.0000	0.0000	0.0000
TexaTherm	0.0000	0.0000	0.0000	0.0000	0.0000	0.0000
NC31-35_1*	0.0000	0.0000	0.0000	0.0000	0.0000	0.0000
CO	0.0000	0.0000	0.0000	0.0000	0.0000	0.0000
Total	2432.9444	1.0000	79389.5504	1.0000	12545.9401	1.0000

* Specified by user.

Material Stream: Oil OVHD

Fluid Package: Peng Robinson
Property Package: Peng-Robinson

CONDITIONS

	Overall	Vapour Phase
Vapour / Phase Fraction	1.0000	1.0000
Temperature: (F)	93.36	93.36
Pressure: (psig)	31.00	31.00
Molar Flow (MMSCFD)	0.9841	0.9841
Mass Flow (lb/hr)	4921	4921
Std Ideal Liq Vol Flow (barrel/day)	664.3	664.3
Molar Enthalpy (Btu/lbmole)	-4.596e+004	-4.596e+004
Molar Entropy (Btu/lbmole-F)	38.88	38.88
Heat Flow (Btu/hr)	-4.967e+006	-4.967e+006
Liq Vol Flow @Std Cond (barrel/day)	646.7 *	646.7

PROPERTIES

	Overall	Vapour Phase
Molecular Weight	45.54	45.54
Molar Density (lbmole/ft3)	8.119e-003	8.119e-003
Mass Density (lb/ft3)	0.3697	0.3697
Act. Volume Flow (barrel/day)	5.689e+004	5.689e+004
Mass Enthalpy (Btu/lb)	-1009	-1009
Mass Entropy (Btu/lb-F)	0.8538	0.8538
Heat Capacity (Btu/lbmole-F)	19.24	19.24
Mass Heat Capacity (Btu/lb-F)	0.4226	0.4226
LHV Molar Basis (Std) (Btu/SCF)	---	---
LHV Mass Basis (Std) (Btu/lb)	---	---
Phase Fraction [Vol. Basis]	1.000	1.000
Phase Fraction [Mass Basis]	1.000	1.000
Partial Pressure of CO2 (psig)	-14.67	---
Cost Based on Flow (Cost/s)	0.0000	0.0000
Act. Gas Flow (ACFM)	221.8	221.8
Avg. Liq. Density (lbmole/ft3)	0.6954	0.6954
Specific Heat (Btu/lbmole-F)	19.24	19.24
Std. Gas Flow (MMSCFD)	0.9822	0.9822
Std. Ideal Liq. Mass Density (lb/ft3)	31.66	31.66
Act. Liq. Flow (USGPM)	---	---
Z Factor	0.9484	0.9484
Watson K	14.77	14.77
User Property	---	---
Cp/(Cp - R)	1.115	1.115
Cp/Cv	1.142	1.142
Heat of Vap. (Btu/lbmole)	9758	---
Kinematic Viscosity (cSt)	1.445	1.445
Liq. Mass Density (Std. Cond) (lb/ft3)	32.52	32.52
Liq. Vol. Flow (Std. Cond) (barrel/day)	646.7	646.7
Liquid Fraction	0.0000	0.0000
Molar Volume (ft3/lbmole)	123.2	123.2
Mass Heat of Vap. (Btu/lb)	214.3	---
Phase Fraction [Molar Basis]	1.0000	1.0000
Surface Tension (dyne/cm)	---	---
Thermal Conductivity (Btu/hr-ft-F)	1.084e-002	1.084e-002
Viscosity (cP)	8.556e-003	8.556e-003
Cv (Semi-Ideal) (Btu/lbmole-F)	17.26	17.26
Mass Cv (Semi-Ideal) (Btu/lb-F)	0.3790	0.3790

* Specified by user.

Material Stream: Oil OVHD (continued)

Fluid Package: Peng Robinson
Property Package: Peng-Robinson

PROPERTIES

		Overall	Vapour Phase			
Cv	(Btu/lbmole-F)	16.86	16.86			
Mass Cv	(Btu/lb-F)	0.3702	0.3702			
Cv (Ent. Method)	(Btu/lbmole-F)	---	---			
Mass Cv (Ent. Method)	(Btu/lb-F)	---	---			
Cp/Cv (Ent. Method)		---	---			
Liq. Vol. Flow - Sum(Std. Cond)	(barrel/day)	646.7	646.7			
Partial Pressure of H2S	(psig)	-14.70	---			
Reid VP at 37.8 C	(psig)	187.9	187.9			
True VP at 37.8 C	(psig)	211.5	211.5			
Viscosity Index		---	---			
HHV Molar Basis (Std)	(Btu/SCF)	---	---			
HHV Mass Basis (Std)	(Btu/lb)	---	---			
CO2 Loading		---	---			
CO2 App ML Con	(lbmole/ft3)	---	---			
CO2 App WT Con	(lbmol/lb)	---	---			
Phase Fraction [Act. Vol. Basis]		1.000	1.000			
Mass Exergy	(Btu/lb)	25.77	---			
Ideal Gas Cp/Cv		1.118	1.118			
Ideal Gas Cp	(Btu/lbmole-F)	18.80	18.80			
Mass Ideal Gas Cp	(Btu/lb-F)	0.4128	0.4128			
Bubble Point Pressure	(psig)	194.7	---			

COMPOSITION

Overall Phase

Vapour Fraction 1.0000

COMPONENTS	MOLAR FLOW (lbmole/hr)	MOLE FRACTION	MASS FLOW (lb/hr)	MASS FRACTION	LIQUID VOLUME FLOW (barrel/day)	LIQUID VOLUME FRACTION
Oxygen	0.0000	0.0000	0.0000	0.0000	0.0000	0.0000
H2S	0.0000	0.0000	0.0000	0.0000	0.0000	0.0000
Nitrogen	0.0000	0.0000	0.0001	0.0000	0.0000	0.0000
CO2	0.0555	0.0005	2.4429	0.0005	0.2027	0.0003
Methane	0.0206	0.0002	0.3312	0.0001	0.0757	0.0001
Ethane	16.2093	0.1500	487.4116	0.0991	93.8320	0.1413
Propane	70.1409	0.6491	3093.0020	0.6286	417.9905	0.6293
i-Butane	6.3563	0.0588	369.4516	0.0751	45.0159	0.0678
n-Butane	9.9325	0.0919	577.3169	0.1173	67.7794	0.1020
22-Mpropane	0.0620	0.0006	4.4700	0.0009	0.5139	0.0008
i-Pentane	1.3522	0.0125	97.5610	0.0198	10.7151	0.0161
n-Pentane	1.2984	0.0120	93.6828	0.0190	10.1865	0.0153
22-Mbutane	0.0077	0.0001	0.6599	0.0001	0.0692	0.0001
Cyclopentane	0.0000	0.0000	0.0000	0.0000	0.0000	0.0000
23-Mbutane	0.0857	0.0008	7.3830	0.0015	0.7600	0.0011
2-Mpentane	0.2121	0.0020	18.2825	0.0037	1.9068	0.0029
3-Mpentane	0.1146	0.0011	9.8732	0.0020	1.0125	0.0015
n-Hexane	0.2458	0.0023	21.1782	0.0043	2.1883	0.0033
Hexanes*	0.0000	0.0000	0.0000	0.0000	0.0000	0.0000
Mcyclopentan	0.1947	0.0018	16.3823	0.0033	1.4916	0.0022
Benzene	0.2046	0.0019	15.9803	0.0032	1.2403	0.0019
Cyclohexane	0.3699	0.0034	31.1273	0.0063	2.7262	0.0041
2-Mhexane	0.0379	0.0004	3.7947	0.0008	0.3812	0.0006
3-Mhexane	0.0333	0.0003	3.3353	0.0007	0.3309	0.0005

Licensed to: EXXONMOBIL TECHNICAL COM
* Specified by user.

Material Stream: Oil OVHD (continued)

Fluid Package: Peng Robinson
Property Package: Peng-Robinson

COMPOSITION

Overall Phase (continued)

Vapour Fraction 1.0000

COMPONENTS	MOLAR FLOW (lbmole/hr)	MOLE FRACTION	MASS FLOW (lb/hr)	MASS FRACTION	LIQUID VOLUME FLOW (barrel/day)	LIQUID VOLUME FRACTION
224-Mpentane	0.0000	0.0000	0.0000	0.0000	0.0000	0.0000
n-Heptane	0.1202	0.0011	12.0436	0.0024	1.2007	0.0018
Heptanes*	0.0000	0.0000	0.0000	0.0000	0.0000	0.0000
Mcyclohexane	0.2029	0.0019	19.9225	0.0040	1.7661	0.0027
Toluene	0.1024	0.0009	9.4341	0.0019	0.7425	0.0011
n-Octane	0.0728	0.0007	8.3151	0.0017	0.8072	0.0012
Octanes*	0.0000	0.0000	0.0000	0.0000	0.0000	0.0000
E-Benzene	0.0019	0.0000	0.1969	0.0000	0.0155	0.0000
m-Xylene	0.0073	0.0001	0.7746	0.0002	0.0612	0.0001
o-Xylene	0.0038	0.0000	0.4085	0.0001	0.0317	0.0000
p-Xylene	0.0073	0.0001	0.7782	0.0002	0.0617	0.0001
Nonanes*	0.0000	0.0000	0.0000	0.0000	0.0000	0.0000
Decanes*	0.0000	0.0000	0.0000	0.0000	0.0000	0.0000
Undecanes_3*	0.0036	0.0000	0.5260	0.0001	0.0455	0.0001
Dodecanes_3*	0.0010	0.0000	0.1536	0.0000	0.0131	0.0000
Triadecanes_3*	0.0004	0.0000	0.0655	0.0000	0.0055	0.0000
Tetradecanes_3*	0.0001	0.0000	0.0210	0.0000	0.0018	0.0000
Pentadecanes_3*	0.0000	0.0000	0.0067	0.0000	0.0006	0.0000
Hexadecanes_3*	0.0000	0.0000	0.0018	0.0000	0.0001	0.0000
Heptadecanes_3*	0.0000	0.0000	0.0006	0.0000	0.0000	0.0000
Octadecanes_3*	0.0000	0.0000	0.0002	0.0000	0.0000	0.0000
Nonadecanes_3*	0.0000	0.0000	0.0001	0.0000	0.0000	0.0000
eicosanes_3*	0.0000	0.0000	0.0000	0.0000	0.0000	0.0000
Heneicosanes_3*	0.0000	0.0000	0.0000	0.0000	0.0000	0.0000
Dodocosanes_3*	0.0000	0.0000	0.0000	0.0000	0.0000	0.0000
Triacosanes_3*	0.0000	0.0000	0.0000	0.0000	0.0000	0.0000
Tetracosanes_3*	0.0000	0.0000	0.0000	0.0000	0.0000	0.0000
Pentacosanes_3*	0.0000	0.0000	0.0000	0.0000	0.0000	0.0000
Hexacosanes_3*	0.0000	0.0000	0.0000	0.0000	0.0000	0.0000
Heptacosanes_3*	0.0000	0.0000	0.0000	0.0000	0.0000	0.0000
Octacosanes_3*	0.0000	0.0000	0.0000	0.0000	0.0000	0.0000
Nonacosanes_3*	0.0000	0.0000	0.0000	0.0000	0.0000	0.0000
Triacontanes*	0.0000	0.0000	0.0000	0.0000	0.0000	0.0000
C31+_2*	0.0000	0.0000	0.0000	0.0000	0.0000	0.0000
H2O	0.5694	0.0053	10.2587	0.0021	0.7039	0.0011
DTRM-G	0.0000	0.0000	0.0000	0.0000	0.0000	0.0000
NC30*	0.0000	0.0000	0.0000	0.0000	0.0000	0.0000
n-Nonane	0.0226	0.0002	2.8962	0.0006	0.2753	0.0004
n-Decane	0.0078	0.0001	1.1069	0.0002	0.1034	0.0002
NC31-35*	0.0000	0.0000	0.0000	0.0000	0.0000	0.0000
TexaTherm	0.0000	0.0000	0.0000	0.0000	0.0000	0.0000
NC31-35_1*	0.0000	0.0000	0.0000	0.0000	0.0000	0.0000
CO	0.0000	0.0000	0.0000	0.0000	0.0000	0.0000
Total	108.0572	1.0000	4920.5776	1.0000	664.2546	1.0000

* Specified by user.

Material Stream: Oil OVHD (continued)

Fluid Package: Peng Robinson
Property Package: Peng-Robinson

COMPOSITION

Vapour Phase

Phase Fraction 1.000

COMPONENTS	MOLAR FLOW (lbmole/hr)	MOLE FRACTION	MASS FLOW (lb/hr)	MASS FRACTION	LIQUID VOLUME FLOW (barrel/day)	LIQUID VOLUME FRACTION
Oxygen	0.0000	0.0000	0.0000	0.0000	0.0000	0.0000
H2S	0.0000	0.0000	0.0000	0.0000	0.0000	0.0000
Nitrogen	0.0000	0.0000	0.0001	0.0000	0.0000	0.0000
CO2	0.0555	0.0005	2.4429	0.0005	0.2027	0.0003
Methane	0.0206	0.0002	0.3312	0.0001	0.0757	0.0001
Ethane	16.2093	0.1500	487.4116	0.0991	93.8320	0.1413
Propane	70.1409	0.6491	3093.0020	0.6286	417.9905	0.6293
i-Butane	6.3563	0.0588	369.4516	0.0751	45.0159	0.0678
n-Butane	9.9325	0.0919	577.3169	0.1173	67.7794	0.1020
22-Mpropane	0.0620	0.0006	4.4700	0.0009	0.5139	0.0008
i-Pentane	1.3522	0.0125	97.5610	0.0198	10.7151	0.0161
n-Pentane	1.2984	0.0120	93.6828	0.0190	10.1865	0.0153
22-Mbutane	0.0077	0.0001	0.6599	0.0001	0.0692	0.0001
Cyclopentane	0.0000	0.0000	0.0000	0.0000	0.0000	0.0000
23-Mbutane	0.0857	0.0008	7.3830	0.0015	0.7600	0.0011
2-Mpentane	0.2121	0.0020	18.2825	0.0037	1.9068	0.0029
3-Mpentane	0.1146	0.0011	9.8732	0.0020	1.0125	0.0015
n-Hexane	0.2458	0.0023	21.1782	0.0043	2.1883	0.0033
Hexanes*	0.0000	0.0000	0.0000	0.0000	0.0000	0.0000
Mcyclopentan	0.1947	0.0018	16.3823	0.0033	1.4916	0.0022
Benzene	0.2046	0.0019	15.9803	0.0032	1.2403	0.0019
Cyclohexane	0.3699	0.0034	31.1273	0.0063	2.7262	0.0041
2-Mhexane	0.0379	0.0004	3.7947	0.0008	0.3812	0.0006
3-Mhexane	0.0333	0.0003	3.3353	0.0007	0.3309	0.0005
224-Mpentane	0.0000	0.0000	0.0000	0.0000	0.0000	0.0000
n-Heptane	0.1202	0.0011	12.0436	0.0024	1.2007	0.0018
Heptanes*	0.0000	0.0000	0.0000	0.0000	0.0000	0.0000
Mcyclohexane	0.2029	0.0019	19.9225	0.0040	1.7661	0.0027
Toluene	0.1024	0.0009	9.4341	0.0019	0.7425	0.0011
n-Octane	0.0728	0.0007	8.3151	0.0017	0.8072	0.0012
Octanes*	0.0000	0.0000	0.0000	0.0000	0.0000	0.0000
E-Benzene	0.0019	0.0000	0.1969	0.0000	0.0155	0.0000
m-Xylene	0.0073	0.0001	0.7746	0.0002	0.0612	0.0001
o-Xylene	0.0038	0.0000	0.4085	0.0001	0.0317	0.0000
p-Xylene	0.0073	0.0001	0.7782	0.0002	0.0617	0.0001
Nonanes*	0.0000	0.0000	0.0000	0.0000	0.0000	0.0000
Decanes*	0.0000	0.0000	0.0000	0.0000	0.0000	0.0000
Undecanes_3*	0.0036	0.0000	0.5260	0.0001	0.0455	0.0001
Dodecanes_3*	0.0010	0.0000	0.1536	0.0000	0.0131	0.0000
Triadecanes_3*	0.0004	0.0000	0.0655	0.0000	0.0055	0.0000
Tetradecanes_3*	0.0001	0.0000	0.0210	0.0000	0.0018	0.0000
Pentadecanes_3*	0.0000	0.0000	0.0067	0.0000	0.0006	0.0000
Hexadecanes_3*	0.0000	0.0000	0.0018	0.0000	0.0001	0.0000
Heptadecanes_3*	0.0000	0.0000	0.0006	0.0000	0.0000	0.0000
Octadecanes_3*	0.0000	0.0000	0.0002	0.0000	0.0000	0.0000
Nonadecanes_3*	0.0000	0.0000	0.0001	0.0000	0.0000	0.0000
eicosanes_3*	0.0000	0.0000	0.0000	0.0000	0.0000	0.0000
Heneicosanes_3*	0.0000	0.0000	0.0000	0.0000	0.0000	0.0000

* Specified by user.

Material Stream: Oil OVHD (continued)

Fluid Package: Peng Robinson
Property Package: Peng-Robinson

COMPOSITION

Vapour Phase (continued)

Phase Fraction 1.000

COMPONENTS	MOLAR FLOW (lbmole/hr)	MOLE FRACTION	MASS FLOW (lb/hr)	MASS FRACTION	LIQUID VOLUME FLOW (barrel/day)	LIQUID VOLUME FRACTION
Dodocosanes_3*	0.0000	0.0000	0.0000	0.0000	0.0000	0.0000
Triacosanes_3*	0.0000	0.0000	0.0000	0.0000	0.0000	0.0000
Tetracosanes_3*	0.0000	0.0000	0.0000	0.0000	0.0000	0.0000
Pentacosanes_3*	0.0000	0.0000	0.0000	0.0000	0.0000	0.0000
Hexacosanes_3*	0.0000	0.0000	0.0000	0.0000	0.0000	0.0000
Heptacosanes_3*	0.0000	0.0000	0.0000	0.0000	0.0000	0.0000
Octacosanes_3*	0.0000	0.0000	0.0000	0.0000	0.0000	0.0000
Nonacosanes_3*	0.0000	0.0000	0.0000	0.0000	0.0000	0.0000
Triacontanes*	0.0000	0.0000	0.0000	0.0000	0.0000	0.0000
C31+_2*	0.0000	0.0000	0.0000	0.0000	0.0000	0.0000
H2O	0.5694	0.0053	10.2587	0.0021	0.7039	0.0011
DTRM-G	0.0000	0.0000	0.0000	0.0000	0.0000	0.0000
NC30*	0.0000	0.0000	0.0000	0.0000	0.0000	0.0000
n-Nonane	0.0226	0.0002	2.8962	0.0006	0.2753	0.0004
n-Decane	0.0078	0.0001	1.1069	0.0002	0.1034	0.0002
NC31-35*	0.0000	0.0000	0.0000	0.0000	0.0000	0.0000
TexaTherm	0.0000	0.0000	0.0000	0.0000	0.0000	0.0000
NC31-35_1*	0.0000	0.0000	0.0000	0.0000	0.0000	0.0000
CO	0.0000	0.0000	0.0000	0.0000	0.0000	0.0000
Total	108.0572	1.0000	4920.5776	1.0000	664.2546	1.0000

* Specified by user.

Material Stream: Residue Gas

Fluid Package: Peng Robinson
Property Package: Peng-Robinson

CONDITIONS

	Overall	Vapour Phase
Vapour / Phase Fraction	1.0000	1.0000
Temperature: (F)	120.0	120.0
Pressure: (psig)	1100	1100
Molar Flow (MMSCFD)	177.2	177.2
Mass Flow (lb/hr)	3.728e+005	3.728e+005
Std Ideal Liq Vol Flow (barrel/day)	7.874e+004	7.874e+004
Molar Enthalpy (Btu/lbmole)	-3.287e+004	-3.287e+004
Molar Entropy (Btu/lbmole-F)	36.57	36.57
Heat Flow (Btu/hr)	-6.395e+008	-6.395e+008
Liq Vol Flow @Std Cond (barrel/day)	3.139e+007 *	3.139e+007

PROPERTIES

	Overall	Vapour Phase
Molecular Weight	19.16	19.16
Molar Density (lbmole/ft3)	0.2130	0.2130
Mass Density (lb/ft3)	4.081	4.081
Act. Volume Flow (barrel/day)	3.904e+005	3.904e+005
Mass Enthalpy (Btu/lb)	-1715	-1715
Mass Entropy (Btu/lb-F)	1.908	1.908
Heat Capacity (Btu/lbmole-F)	12.33	12.33
Mass Heat Capacity (Btu/lb-F)	0.6435	0.6435
LHV Molar Basis (Std) (Btu/SCF)	1039	1039
LHV Mass Basis (Std) (Btu/lb)	2.058e+004	2.058e+004
Phase Fraction [Vol. Basis]	1.000	1.000
Phase Fraction [Mass Basis]	1.000	1.000
Partial Pressure of CO2 (psig)	-14.70	---
Cost Based on Flow (Cost/s)	0.0000	0.0000
Act. Gas Flow (ACFM)	1522	1522
Avg. Liq. Density (lbmole/ft3)	1.056	1.056
Specific Heat (Btu/lbmole-F)	12.33	12.33
Std. Gas Flow (MMSCFD)	176.8	176.8
Std. Ideal Liq. Mass Density (lb/ft3)	20.24	20.24
Act. Liq. Flow (USGPM)	---	---
Z Factor	0.8414	0.8414
Watson K	18.85	18.85
User Property	---	---
Cp/(Cp - R)	1.192	1.192
Cp/Cv	1.540	1.540
Heat of Vap. (Btu/lbmole)	---	---
Kinematic Viscosity (cSt)	0.2162	0.2162
Liq. Mass Density (Std. Cond) (lb/ft3)	5.077e-002	5.077e-002
Liq. Vol. Flow (Std. Cond) (barrel/day)	3.139e+007	3.139e+007
Liquid Fraction	0.0000	0.0000
Molar Volume (ft3/lbmole)	4.695	4.695
Mass Heat of Vap. (Btu/lb)	---	---
Phase Fraction [Molar Basis]	1.0000	1.0000
Surface Tension (dyne/cm)	---	---
Thermal Conductivity (Btu/hr-ft-F)	2.401e-002	2.401e-002
Viscosity (cP)	1.414e-002	1.414e-002
Cv (Semi-Ideal) (Btu/lbmole-F)	10.35	10.35
Mass Cv (Semi-Ideal) (Btu/lb-F)	0.5399	0.5399

* Specified by user.

Material Stream: Residue Gas (continued)

Fluid Package: Peng Robinson
Property Package: Peng-Robinson

PROPERTIES

		Overall	Vapour Phase			
Cv	(Btu/lbmole-F)	8.007	8.007			
Mass Cv	(Btu/lb-F)	0.4179	0.4179			
Cv (Ent. Method)	(Btu/lbmole-F)	---	---			
Mass Cv (Ent. Method)	(Btu/lb-F)	---	---			
Cp/Cv (Ent. Method)		---	---			
Liq. Vol. Flow - Sum(Std. Cond)	(barrel/day)	3.139e+007	3.139e+007			
Partial Pressure of H2S	(psig)	-14.70	---			
Reid VP at 37.8 C	(psig)	---	---			
True VP at 37.8 C	(psig)	---	---			
Viscosity Index		---	---			
HHV Molar Basis (Std)	(Btu/SCF)	1140	1140			
HHV Mass Basis (Std)	(Btu/lb)	2.258e+004	2.258e+004			
CO2 Loading		---	---			
CO2 App ML Con	(lbmole/ft3)	---	---			
CO2 App WT Con	(lbmol/lb)	---	---			
Phase Fraction [Act. Vol. Basis]		1.000	1.000			
Mass Exergy	(Btu/lb)	229.3	---			
Ideal Gas Cp/Cv		1.256	1.256			
Ideal Gas Cp	(Btu/lbmole-F)	9.731	9.731			
Mass Ideal Gas Cp	(Btu/lb-F)	0.5078	0.5078			
Bubble Point Pressure	(psig)	---	---			

COMPOSITION

Overall Phase

Vapour Fraction 1.0000

COMPONENTS	MOLAR FLOW (lbmole/hr)	MOLE FRACTION	MASS FLOW (lb/hr)	MASS FRACTION	LIQUID VOLUME FLOW (barrel/day)	LIQUID VOLUME FRACTION
Oxygen	0.0000	0.0000	0.0000	0.0000	0.0000	0.0000
H2S	0.0000	0.0000	0.0000	0.0000	0.0000	0.0000
Nitrogen	353.2628	0.0182	9895.9520	0.0265	840.3096	0.0107
CO2	0.0122	0.0000	0.5351	0.0000	0.0444	0.0000
Methane	15441.4858	0.7937	247726.2133	0.6645	56656.1590	0.7195
Ethane	3295.0197	0.1694	99080.9139	0.2658	19074.1482	0.2422
Propane	363.1166	0.0187	16012.3546	0.0430	2163.9211	0.0275
i-Butane	0.8341	0.0000	48.4809	0.0001	5.9072	0.0001
n-Butane	0.2074	0.0000	12.0570	0.0000	1.4155	0.0000
22-Mpropane	0.0000	0.0000	0.0000	0.0000	0.0000	0.0000
i-Pentane	0.0001	0.0000	0.0074	0.0000	0.0008	0.0000
n-Pentane	0.0000	0.0000	0.0008	0.0000	0.0001	0.0000
22-Mbutane	0.0000	0.0000	0.0000	0.0000	0.0000	0.0000
Cyclopentane	0.0000	0.0000	0.0000	0.0000	0.0000	0.0000
23-Mbutane	0.0000	0.0000	0.0000	0.0000	0.0000	0.0000
2-Mpentane	0.0000	0.0000	0.0000	0.0000	0.0000	0.0000
3-Mpentane	0.0000	0.0000	0.0000	0.0000	0.0000	0.0000
n-Hexane	0.0000	0.0000	0.0000	0.0000	0.0000	0.0000
Hexanes*	0.0000	0.0000	0.0000	0.0000	0.0000	0.0000
Mcyclopentan	0.0000	0.0000	0.0000	0.0000	0.0000	0.0000
Benzene	0.0000	0.0000	0.0000	0.0000	0.0000	0.0000
Cyclohexane	0.0000	0.0000	0.0000	0.0000	0.0000	0.0000
2-Mhexane	0.0000	0.0000	0.0000	0.0000	0.0000	0.0000
3-Mhexane	0.0000	0.0000	0.0000	0.0000	0.0000	0.0000

* Specified by user.

Material Stream: Residue Gas (continued)

Fluid Package: Peng Robinson
Property Package: Peng-Robinson

COMPOSITION

Overall Phase (continued)

Vapour Fraction 1.0000

COMPONENTS	MOLAR FLOW (lbmole/hr)	MOLE FRACTION	MASS FLOW (lb/hr)	MASS FRACTION	LIQUID VOLUME FLOW (barrel/day)	LIQUID VOLUME FRACTION
224-Mpentane	0.0000	0.0000	0.0000	0.0000	0.0000	0.0000
n-Heptane	0.0000	0.0000	0.0000	0.0000	0.0000	0.0000
Heptanes*	0.0000	0.0000	0.0000	0.0000	0.0000	0.0000
Mcyclohexane	0.0000	0.0000	0.0000	0.0000	0.0000	0.0000
Toluene	0.0000	0.0000	0.0000	0.0000	0.0000	0.0000
n-Octane	0.0000	0.0000	0.0000	0.0000	0.0000	0.0000
Octanes*	0.0000	0.0000	0.0000	0.0000	0.0000	0.0000
E-Benzene	0.0000	0.0000	0.0000	0.0000	0.0000	0.0000
m-Xylene	0.0000	0.0000	0.0000	0.0000	0.0000	0.0000
o-Xylene	0.0000	0.0000	0.0000	0.0000	0.0000	0.0000
p-Xylene	0.0000	0.0000	0.0000	0.0000	0.0000	0.0000
Nonanes*	0.0000	0.0000	0.0000	0.0000	0.0000	0.0000
Decanes*	0.0000	0.0000	0.0000	0.0000	0.0000	0.0000
Undecanes_3*	0.0000	0.0000	0.0000	0.0000	0.0000	0.0000
Dodecanes_3*	0.0000	0.0000	0.0000	0.0000	0.0000	0.0000
Triadecanes_3*	0.0000	0.0000	0.0000	0.0000	0.0000	0.0000
Tetradecanes_3*	0.0000	0.0000	0.0000	0.0000	0.0000	0.0000
Pentadecanes_3*	0.0000	0.0000	0.0000	0.0000	0.0000	0.0000
Hexadecanes_3*	0.0000	0.0000	0.0000	0.0000	0.0000	0.0000
Heptadecanes_3*	0.0000	0.0000	0.0000	0.0000	0.0000	0.0000
Octadecanes_3*	0.0000	0.0000	0.0000	0.0000	0.0000	0.0000
Nonadecanes_3*	0.0000	0.0000	0.0000	0.0000	0.0000	0.0000
eicosanes_3*	0.0000	0.0000	0.0000	0.0000	0.0000	0.0000
Heneicosanes_3*	0.0000	0.0000	0.0000	0.0000	0.0000	0.0000
Dodocosanes_3*	0.0000	0.0000	0.0000	0.0000	0.0000	0.0000
Triacosanes_3*	0.0000	0.0000	0.0000	0.0000	0.0000	0.0000
Tetracosanes_3*	0.0000	0.0000	0.0000	0.0000	0.0000	0.0000
Pentacosanes_3*	0.0000	0.0000	0.0000	0.0000	0.0000	0.0000
Hexacosanes_3*	0.0000	0.0000	0.0000	0.0000	0.0000	0.0000
Heptacosanes_3*	0.0000	0.0000	0.0000	0.0000	0.0000	0.0000
Octacosanes_3*	0.0000	0.0000	0.0000	0.0000	0.0000	0.0000
Nonacosanes_3*	0.0000	0.0000	0.0000	0.0000	0.0000	0.0000
Triacontanes*	0.0000	0.0000	0.0000	0.0000	0.0000	0.0000
C31+_2*	0.0000	0.0000	0.0000	0.0000	0.0000	0.0000
H2O	0.0000	0.0000	0.0000	0.0000	0.0000	0.0000
DTRM-G	0.0000	0.0000	0.0000	0.0000	0.0000	0.0000
NC30*	0.0000	0.0000	0.0000	0.0000	0.0000	0.0000
n-Nonane	0.0000	0.0000	0.0000	0.0000	0.0000	0.0000
n-Decane	0.0000	0.0000	0.0000	0.0000	0.0000	0.0000
NC31-35*	0.0000	0.0000	0.0000	0.0000	0.0000	0.0000
TexaTherm	0.0000	0.0000	0.0000	0.0000	0.0000	0.0000
NC31-35_1*	0.0000	0.0000	0.0000	0.0000	0.0000	0.0000
CO	0.0000	0.0000	0.0000	0.0000	0.0000	0.0000
Total	19453.9387	1.0000	372776.5150	1.0000	78741.9059	1.0000

* Specified by user.

Material Stream: Residue Gas (continued)

Fluid Package: Peng Robinson
Property Package: Peng-Robinson

COMPOSITION

Vapour Phase

Phase Fraction 1.000

COMPONENTS	MOLAR FLOW (lbmole/hr)	MOLE FRACTION	MASS FLOW (lb/hr)	MASS FRACTION	LIQUID VOLUME FLOW (barrel/day)	LIQUID VOLUME FRACTION
Oxygen	0.0000	0.0000	0.0000	0.0000	0.0000	0.0000
H2S	0.0000	0.0000	0.0000	0.0000	0.0000	0.0000
Nitrogen	353.2628	0.0182	9895.9520	0.0265	840.3096	0.0107
CO2	0.0122	0.0000	0.5351	0.0000	0.0444	0.0000
Methane	15441.4858	0.7937	247726.2133	0.6645	56656.1590	0.7195
Ethane	3295.0197	0.1694	99080.9139	0.2658	19074.1482	0.2422
Propane	363.1166	0.0187	16012.3546	0.0430	2163.9211	0.0275
i-Butane	0.8341	0.0000	48.4809	0.0001	5.9072	0.0001
n-Butane	0.2074	0.0000	12.0570	0.0000	1.4155	0.0000
22-Mpropane	0.0000	0.0000	0.0000	0.0000	0.0000	0.0000
i-Pentane	0.0001	0.0000	0.0074	0.0000	0.0008	0.0000
n-Pentane	0.0000	0.0000	0.0008	0.0000	0.0001	0.0000
22-Mbutane	0.0000	0.0000	0.0000	0.0000	0.0000	0.0000
Cyclopentane	0.0000	0.0000	0.0000	0.0000	0.0000	0.0000
23-Mbutane	0.0000	0.0000	0.0000	0.0000	0.0000	0.0000
2-Mpentane	0.0000	0.0000	0.0000	0.0000	0.0000	0.0000
3-Mpentane	0.0000	0.0000	0.0000	0.0000	0.0000	0.0000
n-Hexane	0.0000	0.0000	0.0000	0.0000	0.0000	0.0000
Hexanes*	0.0000	0.0000	0.0000	0.0000	0.0000	0.0000
Mcyclopentan	0.0000	0.0000	0.0000	0.0000	0.0000	0.0000
Benzene	0.0000	0.0000	0.0000	0.0000	0.0000	0.0000
Cyclohexane	0.0000	0.0000	0.0000	0.0000	0.0000	0.0000
2-Mhexane	0.0000	0.0000	0.0000	0.0000	0.0000	0.0000
3-Mhexane	0.0000	0.0000	0.0000	0.0000	0.0000	0.0000
224-Mpentane	0.0000	0.0000	0.0000	0.0000	0.0000	0.0000
n-Heptane	0.0000	0.0000	0.0000	0.0000	0.0000	0.0000
Heptanes*	0.0000	0.0000	0.0000	0.0000	0.0000	0.0000
Mcyclohexane	0.0000	0.0000	0.0000	0.0000	0.0000	0.0000
Toluene	0.0000	0.0000	0.0000	0.0000	0.0000	0.0000
n-Octane	0.0000	0.0000	0.0000	0.0000	0.0000	0.0000
Octanes*	0.0000	0.0000	0.0000	0.0000	0.0000	0.0000
E-Benzene	0.0000	0.0000	0.0000	0.0000	0.0000	0.0000
m-Xylene	0.0000	0.0000	0.0000	0.0000	0.0000	0.0000
o-Xylene	0.0000	0.0000	0.0000	0.0000	0.0000	0.0000
p-Xylene	0.0000	0.0000	0.0000	0.0000	0.0000	0.0000
Nonanes*	0.0000	0.0000	0.0000	0.0000	0.0000	0.0000
Decanes*	0.0000	0.0000	0.0000	0.0000	0.0000	0.0000
Undecanes_3*	0.0000	0.0000	0.0000	0.0000	0.0000	0.0000
Dodecanes_3*	0.0000	0.0000	0.0000	0.0000	0.0000	0.0000
Triadecanes_3*	0.0000	0.0000	0.0000	0.0000	0.0000	0.0000
Tetradecanes_3*	0.0000	0.0000	0.0000	0.0000	0.0000	0.0000
Pentadecanes_3*	0.0000	0.0000	0.0000	0.0000	0.0000	0.0000
Hexadecanes_3*	0.0000	0.0000	0.0000	0.0000	0.0000	0.0000
Heptadecanes_3*	0.0000	0.0000	0.0000	0.0000	0.0000	0.0000
Octadecanes_3*	0.0000	0.0000	0.0000	0.0000	0.0000	0.0000
Nonadecanes_3*	0.0000	0.0000	0.0000	0.0000	0.0000	0.0000
eicosanes_3*	0.0000	0.0000	0.0000	0.0000	0.0000	0.0000
Heneicosanes_3*	0.0000	0.0000	0.0000	0.0000	0.0000	0.0000

* Specified by user.

Material Stream: Residue Gas (continued)

Fluid Package: Peng Robinson
Property Package: Peng-Robinson

COMPOSITION

Vapour Phase (continued)

Phase Fraction 1.000

COMPONENTS	MOLAR FLOW (lbmole/hr)	MOLE FRACTION	MASS FLOW (lb/hr)	MASS FRACTION	LIQUID VOLUME FLOW (barrel/day)	LIQUID VOLUME FRACTION
Dodocosanes_3*	0.0000	0.0000	0.0000	0.0000	0.0000	0.0000
Triacosanes_3*	0.0000	0.0000	0.0000	0.0000	0.0000	0.0000
Tetracosanes_3*	0.0000	0.0000	0.0000	0.0000	0.0000	0.0000
Pentacosanes_3*	0.0000	0.0000	0.0000	0.0000	0.0000	0.0000
Hexacosanes_3*	0.0000	0.0000	0.0000	0.0000	0.0000	0.0000
Heptacosanes_3*	0.0000	0.0000	0.0000	0.0000	0.0000	0.0000
Octacosanes_3*	0.0000	0.0000	0.0000	0.0000	0.0000	0.0000
Nonacosanes_3*	0.0000	0.0000	0.0000	0.0000	0.0000	0.0000
Triacontanes*	0.0000	0.0000	0.0000	0.0000	0.0000	0.0000
C31+_2*	0.0000	0.0000	0.0000	0.0000	0.0000	0.0000
H2O	0.0000	0.0000	0.0000	0.0000	0.0000	0.0000
DTRM-G	0.0000	0.0000	0.0000	0.0000	0.0000	0.0000
NC30*	0.0000	0.0000	0.0000	0.0000	0.0000	0.0000
n-Nonane	0.0000	0.0000	0.0000	0.0000	0.0000	0.0000
n-Decane	0.0000	0.0000	0.0000	0.0000	0.0000	0.0000
NC31-35*	0.0000	0.0000	0.0000	0.0000	0.0000	0.0000
TexaTherm	0.0000	0.0000	0.0000	0.0000	0.0000	0.0000
NC31-35_1*	0.0000	0.0000	0.0000	0.0000	0.0000	0.0000
CO	0.0000	0.0000	0.0000	0.0000	0.0000	0.0000
Total	19453.9387	1.0000	372776.5150	1.0000	78741.9059	1.0000

* Specified by user.

Promax Simulation

Amine Treating

MDEA Flowsheet
Plant Schematic

Client Name:	Husky Amine - Max Capacity	Job:
Location:		
Flowsheet:	MDEA Flowsheet	

MDEA Sweetening with 50 wt% MDEA+Piperazine

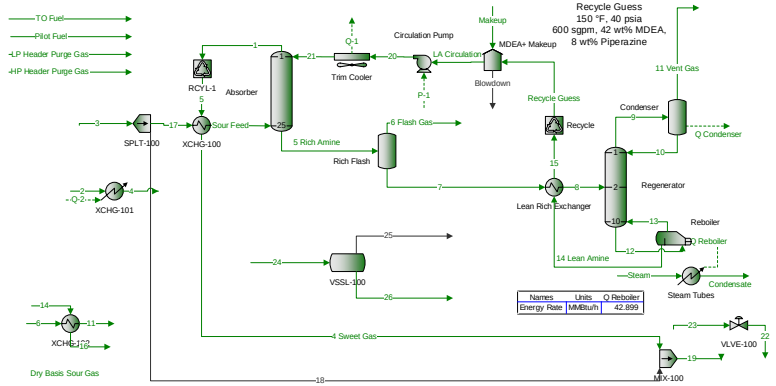

Names	Units	Sour Feed	4 Sweet Gas	11 Vent Gas	5 Rich Amine	6 Flash Gas	21	19
Std Vapor Volumetric Flow	MMSCFD	250	245	5.52	91.3	0.128	86.8	245
Hydrogen Sulfide(Mole Fraction)	ppm	0.4906	0.0001756	22.15	1.382	2.365	0.04162	0.0001756
Carbon Dioxide(Mole Fraction)	ppm	2.06e+04	9.91	9.31e+05	5.7e+04	5.99e+04	625	9.91
Carbon Dioxide(Mole Fraction)	%	2.0605	0.00099133	93.128	5.6981	5.9896	0.062476	0.00099133
Carbon Dioxide(Partial Molar Volumetric Fraction)	ppm	19549	8.1234	9.3168e+05	8771.1	59634	-749.96	8.1234
Total Acid Gas Loading/Mole Amine					0.43343		0.0045146	

Copyright © 2002-2019 BRE Group, Ltd.
Licensed to Esso Exploration, Inc.

Process Streams Report
All Streams
Tabulated by Total Phase

Client Name:	Husky Amine - Max Capacity	Job:	
Location:			
Flowsheet:	MDEA Flowsheet		

Connections

	Blowdown	Condensate	Dry Basis Sour Gas	HP Header Purge Gas	LA Circulation
From Block	MDEA+ Makeup	Steam Tubes	--	--	MDEA+ Makeup
To Block	--	--	--	--	Circulation Pump

Stream Composition

Mole Fraction	Blowdown %	Condensate %	Dry Basis Sour Gas %	HP Header Purge Gas %	LA Circulation %
Hydrogen Sulfide	4.21463E-06	0	0 *	0	4.16152E-06
N2	0	0	2.29122 *	0.0225772	0
Carbon Dioxide	0.0632739	0	2.0831 *	0.000188884	0.0624765
Methane	0	0	71.5884 *	97.4972	0
Ethane	0	0	13.6333 *	2	0
Propane	0	0	6.61202 *	0.48	0
i-Butane	0	0	0.596016 *	0	0
n-Butane	0	0	2.25137 *	0	0
i-Pentane	0	0	0.168127 *	0	0
n-Pentane	0	0	0.159771 *	0	0
n-Hexane	0	0	0.597709 *	0	0
Water	85.9229	100	0.0190495 *	0	86.098
MDEA	11.0925	0	0 *	0	10.9533
Piperazine	2.92126	0	0 *	0	2.88629
O2	0	0	0 *	0	0

Mass Fraction	Blowdown %	Condensate %	Dry Basis Sour Gas %	HP Header Purge Gas %	LA Circulation %
Hydrogen Sulfide	4.59768E-06	0	0 *	0	4.56383E-06
N2	0	0	2.85669 *	0.0384233	0
Carbon Dioxide	0.0891332	0	4.08026 *	0.000505011	0.0884769
Methane	0	0	51.1146 *	95.0217	0
Ethane	0	0	18.2453 *	3.6535	0
Propane	0	0	12.9766 *	1.28587	0
i-Butane	0	0	1.54181 *	0	0
n-Butane	0	0	5.82399 *	0	0
i-Pentane	0	0	0.53988 *	0	0
n-Pentane	0	0	0.51305 *	0	0
n-Hexane	0	0	2.29247 *	0	0
Water	49.5472	100	0.0152741 *	0	49.9115
MDEA	42.3095	0	0 *	0	42
Piperazine	8.05418	0	0 *	0	8
O2	0	0	0 *	0	0

Mass Flow	Blowdown lb/h	Condensate lb/h	Dry Basis Sour Gas lb/h	HP Header Purge Gas lb/h	LA Circulation lb/h
Hydrogen Sulfide	0	0	0 *	0	0.0135102
N2	0	0	17618.4 *	0.0133331	0
Carbon Dioxide	0	0	25164.7 *	0.000175242	261.915
Methane	0	0	315245 *	32.9731	0
Ethane	0	0	112526 *	1.26779	0
Propane	0	0	80032.2 *	0.446204	0
i-Butane	0	0	9509.01 *	0	0
n-Butane	0	0	35919 *	0	0
i-Pentane	0	0	3329.67 *	0	0
n-Pentane	0	0	3164.2 *	0	0
n-Hexane	0	0	14138.7 *	0	0
Water	0	46800	94.2018 *	0	147751

Copyright © 2002-2019 BRE Group, Ltd.
Licensed to Esso Exploration, Inc.

Process Streams Report
All Streams
Tabulated by Total Phase

Client Name:	Husky Amine - Max Capacity	Job:	
Location:			
Flowsheet:	MDEA Flowsheet		

Mass Flow	Blowdown lb/h	Condensate lb/h	Dry Basis Sour Gas lb/h	HP Header Purge Gas lb/h	LA Circulation lb/h
MDEA	0	0	0 *	0	124331
Piperazine	0	0	0 *	0	23682.1
O2	0	0	0 *	0	0

Std Vapor Volumetric Flow	Blowdown MMSCFD	Condensate MMSCFD	Dry Basis Sour Gas MMSCFD	HP Header Purge Gas MMSCFD	LA Circulation MMSCFD
Hydrogen Sulfide	0	0	0 *	0	3.61039E-06
N2	0	0	5.72804 *	4.33482E-06	0
Carbon Dioxide	0	0	5.20775 *	3.62657E-08	0.0542025
Methane	0	0	178.971 *	0.0187195	0
Ethane	0	0	34.0831 *	0.000384	0
Propane	0	0	16.53 *	9.216E-05	0
i-Butane	0	0	1.49004 *	0	0
n-Butane	0	0	5.62842 *	0	0
i-Pentane	0	0	0.420317 *	0	0
n-Pentane	0	0	0.399429 *	0	0
n-Hexane	0	0	1.49427 *	0	0
Water	0	23.6597	0.0476237 *	0	74.6957
MDEA	0	0	0 *	0	9.50269
Piperazine	0	0	0 *	0	2.50405
O2	0	0	0 *	0	0

Stream Properties

Property	Units	Blowdown	Condensate	Dry Basis Sour Gas	HP Header Purge Gas	LA Circulation
Temperature	°F		297.792	92 *	100	189.856
Pressure	psia	24	64.6959	1014.7 *	100	24
Molecular Weight	lb/lbmol	31.2415	18.0153	22.4682	16.4604	31.0766
Mass Flow	lb/h	0	46800	616742	34.7006	296027
Std Vapor Volumetric Flow	MMSCFD	0	23.6597	250 *	0.0192	86.7566
Std Liquid Volumetric Flow	sgpm	0	93.5566	3373.78	0.228726	600 *
Mass Cp	Btu/(lb*°F)		1.02823	0.658149	0.542569	0.878483
Net Ideal Gas Heating Value	Btu/ft^3	489.85	0	1148.95	930.132	483.755
Gross Ideal Gas Heating Value	Btu/ft^3	576.657	50.31	1265.07	1032.19	570.107

Remarks

ProMax 5.0.19050.0
Copyright © 2002-2019 BRE Group, Ltd.
Licensed to Esso Exploration, Inc.

Process Streams Report
All Streams
Tabulated by Total Phase

Client Name:	Husky Amine - Max Capacity	Job:
Location:		
Flowsheet:	MDEA Flowsheet	

Connections

	LP Header Purge Gas	Makeup	Pilot Fuel	Recycle Guess	Sour Feed
From Block	--	--	--	Recycle	XCHG-100
To Block	--	MDEA+ Makeup	--	MDEA+ Makeup	Absorber

Stream Composition

Mole Fraction	LP Header Purge Gas %	Makeup %	Pilot Fuel %	Recycle Guess %	Sour Feed %
Hydrogen Sulfide	0	0	0	4.21463E-06	4.90595E-05
N2	0.0225772	0	0.0225772	0	1.69559
Carbon Dioxide	0.000188884	0	0.000188884	0.0632739	2.0605
Methane	97.4972	0	97.4972	0	71.7123
Ethane	2	0	2	0	13.9678
Propane	0.48	0	0.48	0	6.67248
i-Butane	0	0	0	0	0.787993
n-Butane	0	0	0	0	1.75162
i-Pentane	0	0	0	0	0.365984
n-Pentane	0	0	0	0	0.369025
n-Hexane	0	0	0	0	0.616677
Water	0	99.8111	0	85.9229	0
MDEA	0	0.042106	0	11.0925	0
Piperazine	0	0.14682	0	2.92126	0
O2	0	0	0	0	0

Mass Fraction	LP Header Purge Gas %	Makeup %	Pilot Fuel %	Recycle Guess %	Sour Feed %
Hydrogen Sulfide	0	0	0	4.59768E-06	7.40923E-05
N2	0.0384233	0	0.0384233	0	2.10488
Carbon Dioxide	0.000505011	0	0.000505011	0.0891332	4.01845
Methane	95.0217	0	95.0217	0	50.9805
Ethane	3.6535	0	3.6535	0	18.6118
Propane	1.28587	0	1.28587	0	13.0383
i-Butane	0	0	0	0	2.02957
n-Butane	0	0	0	0	4.5115
i-Pentane	0	0	0	0	1.17012
n-Pentane	0	0	0	0	1.17984
n-Hexane	0	0	0	0	2.35495
Water	0	99.0272	0	49.5472	0
MDEA	0	0.276323	0	42.3095	0
Piperazine	0	0.696472	0	8.05418	0
O2	0	0	0	0	0

Mass Flow	LP Header Purge Gas lb/h	Makeup lb/h	Pilot Fuel lb/h	Recycle Guess lb/h	Sour Feed lb/h
Hydrogen Sulfide	0	0	0	0.0135102	0.458954
N2	0.0124998	0	0.0041666	0	13038.4
Carbon Dioxide	0.000164289	0	5.4763E-05	261.915	24891.7
Methane	30.9123	0	10.3041	0	315791
Ethane	1.18855	0	0.396183	0	115288
Propane	0.418316	0	0.139439	0	80764
i-Butane	0	0	0	0	12571.9
n-Butane	0	0	0	0	27945.8
i-Pentane	0	0	0	0	7248.13
n-Pentane	0	0	0	0	7308.37
n-Hexane	0	0	0	0	14587.4
Water	0	2158.62	0	145593	0
MDEA	0	6.02336	0	124325	0

Copyright © 2002-2019 BRE Group, Ltd.
Licensed to Esso Exploration, Inc.

Process Streams Report
All Streams
Tabulated by Total Phase

Client Name:	Husky Amine - Max Capacity	Job:	
Location:			
Flowsheet:	MDEA Flowsheet		

Mass Flow	LP Header Purge Gas lb/h	Makeup lb/h	Pilot Fuel lb/h	Recycle Guess lb/h	Sour Feed lb/h
Piperazine	0	15.1819	0	23667	0
O2	0	0	0	0	0

Std Vapor Volumetric Flow	LP Header Purge Gas MMSCFD	Makeup MMSCFD	Pilot Fuel MMSCFD	Recycle Guess MMSCFD	Sour Feed MMSCFD
Hydrogen Sulfide	0	0	0	3.61039E-06	0.000122649
N2	4.06389E-06	0	1.35463E-06	0	4.23898
Carbon Dioxide	3.39991E-08	0	1.1333E-08	0.0542025	5.15124
Methane	0.0175495	0	0.00584983	0	179.281
Ethane	0.00036	0	0.00012	0	34.9195
Propane	8.64E-05	0	2.88E-05	0	16.6812
i-Butane	0	0	0	0	1.96998
n-Butane	0	0	0	0	4.37905
i-Pentane	0	0	0	0	0.914959
n-Pentane	0	0	0	0	0.922563
n-Hexane	0	0	0	0	1.54169
Water	0	1.09129	0	73.6044	0
MDEA	0	0.000460368	0	9.50223	0
Piperazine	0	0.00160527	0	2.50244	0
O2	0	0	0	0	0

Stream Properties

Property	Units	LP Header Purge Gas	Makeup	Pilot Fuel	Recycle Guess	Sour Feed
Temperature	°F	100	80 *	100	190.762	110 *
Pressure	psia	100	40 *	100	24	1009.7
Molecular Weight	lb/lbmol	16.4604	18.1579	16.4604	31.2415	22.5663
Mass Flow	lb/h	32.5318	2179.83	10.8439	293847	619435
Std Vapor Volumetric Flow	MMSCFD	0.018 *	1.09336	0.006	85.6633	250
Std Liquid Volumetric Flow	sgpm	0.214431	4.36891	0.071477	595.631	3394.21
Mass Cp	Btu/(lb*°F)	0.542569	0.995141	0.542569	0.878279	0.640751
Net Ideal Gas Heating Value	Btu/ft^3	930.132	6.17254	930.132	489.85	1163.52
Gross Ideal Gas Heating Value	Btu/ft^3	1032.19	56.894	1032.19	576.657	1280.9

Remarks

ProMax 5.0.19050.0
Copyright © 2002-2019 BRE Group, Ltd.
Licensed to Esso Exploration, Inc.

Process Streams Report
All Streams
Tabulated by Total Phase

Client Name:	Husky Amine - Max Capacity	Job:	
Location:			
Flowsheet:	MDEA Flowsheet		

Connections

	Steam	TO Fuel	1	2	3
From Block	--	--	Absorber	--	--
To Block	Steam Tubes	--	RCYL-1	XCHG-101	SPLT-100

Stream Composition

Mole Fraction	Steam %	TO Fuel %	1 %	2 %	3 %
Hydrogen Sulfide	0 *	0	1.75617E-08	0 *	4.90595E-05 *
N2	0 *	0.0225772	1.7267	2.2881 *	1.69559 *
Carbon Dioxide	0 *	0.000188884	0.000991332	2.09826 *	2.0605 *
Methane	0 *	97.4972	73.0027	70.0718 *	71.7123 *
Ethane	0 *	2	14.218	13.1491 *	13.9678 *
Propane	0 *	0.48	6.79357	7.7036 *	6.67248 *
i-Butane	0 *	0	0.802421	0.859286 *	0.787993 *
n-Butane	0 *	0	1.7835	2.24813 *	1.75162 *
i-Pentane	0 *	0	0.372722	0.439635 *	0.365984 *
n-Pentane	0 *	0	0.375805	0.46961 *	0.369025 *
n-Hexane	0 *	0	0.628053	0.579518 *	0.616677 *
Water	100 *	0	0.29466	0.0930397 *	0 *
MDEA	0 *	0	0.000187525	0 *	0 *
Piperazine	0 *	0	0.000654041	0 *	0 *
O2	0 *	0	0	0 *	0 *

Mass Fraction	Steam %	TO Fuel %	1 %	2 %	3 %
Hydrogen Sulfide	0 *	0	2.70767E-08	0 *	7.40923E-05 *
N2	0 *	0.0384233	2.18826	2.77062 *	2.10488 *
Carbon Dioxide	0 *	0.000505011	0.00197371	3.99155 *	4.01845 *
Methane	0 *	95.0217	52.9819	48.5904 *	50.9805 *
Ethane	0 *	3.6535	19.3408	17.0904 *	18.6118 *
Propane	0 *	1.28587	13.5522	14.6834 *	13.0383 *
i-Butane	0 *	0	2.1099	2.15882 *	2.02957 *
n-Butane	0 *	0	4.68956	5.64808 *	4.5115 *
i-Pentane	0 *	0	1.21655	1.37106 *	1.17012 *
n-Pentane	0 *	0	1.22662	1.46455 *	1.17984 *
n-Hexane	0 *	0	2.44848	2.15867 *	2.35495 *
Water	100 *	0	0.240148	0.0724513 *	0 *
MDEA	0 *	0	0.00101092	0 *	0 *
Piperazine	0 *	0	0.00254862	0 *	0 *
O2	0 *	0	0	0 *	0 *

Mass Flow	Steam lb/h	TO Fuel lb/h	1 lb/h	2 lb/h	3 lb/h
Hydrogen Sulfide	0 *	0	0.000161297	0 *	0.458954 *
N2	0 *	0.384677	13035.6	14075.6 *	13038.4 *
Carbon Dioxide	0 *	0.00505594	11.7575	20278.2 *	24891.7 *
Methane	0 *	951.315	315616	246854 *	315791 *
Ethane	0 *	36.5772	115214	86824 *	115288 *
Propane	0 *	12.8735	80731.4	74595.8 *	80764 *
i-Butane	0 *	0	12568.8	10967.4 *	12571.9 *
n-Butane	0 *	0	27936	28693.9 *	27945.8 *
i-Pentane	0 *	0	7247.07	6965.4 *	7248.13 *
n-Pentane	0 *	0	7307.02	7440.32 *	7308.37 *
n-Hexane	0 *	0	14585.7	10966.7 *	14587.4 *
Water	46800 *	0	1430.58	368.073 *	0 *
MDEA	0 *	0	6.02209	0 *	0 *
Piperazine	0 *	0	15.1823	0 *	0 *
O2	0 *	0	0	0 *	0 *

Copyright © 2002-2019 BRE Group, Ltd.
Licensed to Esso Exploration, Inc.

Process Streams Report
All Streams
Tabulated by Total Phase

Client Name:	Husky Amine - Max Capacity	Job:	
Location:			
Flowsheet:	MDEA Flowsheet		

Std Vapor Volumetric Flow	Steam MMSCFD	TO Fuel MMSCFD	1 MMSCFD	2 MMSCFD	3 MMSCFD
Hydrogen Sulfide	0 *	0	4.31043E-08	0 *	0.000122649 *
N2	0 *	0.000125065	4.23808	4.5762 *	4.23898 *
Carbon Dioxide	0 *	1.04631E-06	0.00243317	4.19651 *	5.15124 *
Methane	0 *	0.54008	179.181	140.144 *	179.281 *
Ethane	0 *	0.0110789	34.8973	26.2981 *	34.9195 *
Propane	0 *	0.00265893	16.6745	15.4072 *	16.6812 *
i-Butane	0 *	0	1.9695	1.71857 *	1.96998 *
n-Butane	0 *	0	4.3775	4.49626 *	4.37905 *
i-Pentane	0 *	0	0.914826	0.879269 *	0.914959 *
n-Pentane	0 *	0	0.922393	0.939219 *	0.922563 *
n-Hexane	0 *	0	1.54152	1.15904 *	1.54169 *
Water	23.6597 *	0	0.723227	0.186079 *	0 *
MDEA	0 *	0	0.000460271	0 *	0 *
Piperazine	0 *	0	0.00160531	0 *	0 *
O2	0 *	0	0	0 *	0 *

Stream Properties

Property	Units	Steam	TO Fuel	1	2	3
Temperature	°F	297.792	100	139.172	50 *	90 *
Pressure	psia	64.6959 *	100	1004.7	1000 *	1014.7 *
Molecular Weight	lb/lbmol	18.0153	16.4604	22.1046	23.1347	22.5663
Mass Flow	lb/h	46800 *	1001.16	595705	508029	619435
Std Vapor Volumetric Flow	MMSCFD	23.6597	0.553944	245.445	200 *	250 *
Std Liquid Volumetric Flow	sgpm	93.5566	6.59904	3334.48	2728.1	3394.21
Mass Cp	Btu/(lb*°F)	0.471889	0.542569	0.632927	0.717859	0.669295
Net Ideal Gas Heating Value	Btu/ft^3	0	930.132	1184.53	1181.12	1163.52
Gross Ideal Gas Heating Value	Btu/ft^3	50.31	1032.19	1304.18	1299.56	1280.9

Remarks

ProMax 5.0.19050.0
Copyright © 2002-2019 BRE Group, Ltd.
Licensed to Esso Exploration, Inc.

Process Streams Report
All Streams
Tabulated by Total Phase

Client Name:	Husky Amine - Max Capacity	Job:	
Location:			
Flowsheet:	MDEA Flowsheet		

Connections

	4	4 Sweet Gas	5	5 Rich Amine	6
From Block	XCHG-101	XCHG-100	RCYL-1	Absorber	--
To Block	--	MIX-100	XCHG-100	Rich Flash	XCHG-102

Stream Composition

Mole Fraction	4 %	4 Sweet Gas %	5 %	5 Rich Amine %	6 %
Hydrogen Sulfide	0	1.75617E-08	1.75617E-08	0.000138225	0 *
N2	2.2881	1.7267	1.7267	0.000987765	2.2897 *
Carbon Dioxide	2.09826	0.000991332	0.000991332	5.69806	2.09972 *
Methane	70.0718	73.0027	73.0027	0.108863	70.1208 *
Ethane	13.1491	14.218	14.218	0.0243591	13.1583 *
Propane	7.7036	6.79357	6.79357	0.00737961	7.70898 *
i-Butane	0.859286	0.802421	0.802421	0.000528686	0.859887 *
n-Butane	2.24813	1.7835	1.7835	0.00169183	2.2497 *
i-Pentane	0.439635	0.372722	0.372722	0.000145926	0.439942 *
n-Pentane	0.46961	0.375805	0.375805	0.000186167	0.469938 *
n-Hexane	0.579518	0.628053	0.628053	0.000186896	0.579924 *
Water	0.0930397	0.29466	0.29466	81.0106	0.0231808 *
MDEA	0	0.000187525	0.000187525	10.4063	0 *
Piperazine	0	0.000654041	0.000654041	2.74054	0 *
O2	0	0	0	0	0 *

Mass Fraction	4 %	4 Sweet Gas %	5 %	5 Rich Amine %	6 %
Hydrogen Sulfide	0	2.70767E-08	2.70767E-08	0.000147707	0 *
N2	2.77062	2.18826	2.18826	0.000867609	2.77213 *
Carbon Dioxide	3.99155	0.00197371	0.00197371	7.86281	3.99373 *
Methane	48.5904	52.9819	52.9819	0.0547588	48.6169 *
Ethane	17.0904	19.3408	19.3408	0.022966	17.0997 *
Propane	14.6834	13.5522	13.5522	0.0102031	14.6914 *
i-Butane	2.15882	2.1099	2.1099	0.000963484	2.16 *
n-Butane	5.64808	4.68956	4.68956	0.00308321	5.65115 *
i-Pentane	1.37106	1.21655	1.21655	0.000330115	1.37181 *
n-Pentane	1.46455	1.22662	1.22662	0.000421148	1.46534 *
n-Hexane	2.15867	2.44848	2.44848	0.000504995	2.15985 *
Water	0.0724513	0.240148	0.240148	45.7601	0.0180484 *
MDEA	0	0.00101092	0.00101092	38.8813	0 *
Piperazine	0	0.00254862	0.00254862	7.40156	0 *
O2	0	0	0	0	0 *

Mass Flow	4 lb/h	4 Sweet Gas lb/h	5 lb/h	5 Rich Amine lb/h	6 lb/h
Hydrogen Sulfide	0	0.000161297	0.000161297	0.472303	0 *
N2	14075.6	13035.6	13035.6	2.77423	14188.4 *
Carbon Dioxide	20278.2	11.7575	11.7575	25141.8	20440.8 *
Methane	246854	315616	315616	175.095	248832 *
Ethane	86824	115214	115214	73.4353	87519.9 *
Propane	74595.8	80731.4	80731.4	32.6251	75193.7 *
i-Butane	10967.4	12568.8	12568.8	3.0808	11055.3 *
n-Butane	28693.9	27936	27936	9.85877	28923.8 *
i-Pentane	6965.4	7247.07	7247.07	1.05556	7021.23 *
n-Pentane	7440.32	7307.02	7307.02	1.34665	7499.95 *
n-Hexane	10966.7	14585.7	14585.7	1.61475	11054.6 *
Water	368.073	1430.58	1430.58	146321	92.3759 *
MDEA	0	6.02209	6.02209	124325	0 *
Piperazine	0	15.1823	15.1823	23667	0 *
O2	0	0	0	0	0 *

Copyright © 2002-2019 BRE Group, Ltd.
Licensed to Esso Exploration, Inc.

Process Streams Report
All Streams
Tabulated by Total Phase

Client Name:	Husky Amine - Max Capacity	Job:
Location:		
Flowsheet:	MDEA Flowsheet	

Std Vapor Volumetric Flow	4 MMSCFD	4 Sweet Gas MMSCFD	5 MMSCFD	5 Rich Amine MMSCFD	6 MMSCFD
Hydrogen Sulfide	0	4.31043E-08	4.31043E-08	0.000126216	0 *
N2	4.5762	4.23808	4.23808	0.000901949	4.61287 *
Carbon Dioxide	4.19651	0.00243317	0.00243317	5.20301	4.23015 *
Methane	140.144	179.181	179.181	0.0994046	141.267 *
Ethane	26.2981	34.8973	34.8973	0.0222428	26.5089 *
Propane	15.4072	16.6745	16.6745	0.00673847	15.5307 *
i-Butane	1.71857	1.9695	1.9695	0.000482754	1.73235 *
n-Butane	4.49626	4.3775	4.3775	0.00154485	4.5323 *
i-Pentane	0.879269	0.914826	0.914826	0.000133248	0.886316 *
n-Pentane	0.939219	0.922393	0.922393	0.000169992	0.946747 *
n-Hexane	1.15904	1.54152	1.54152	0.000170658	1.16833 *
Water	0.186079	0.723227	0.723227	73.9725	0.0467006 *
MDEA	0	0.000460271	0.000460271	9.50223	0 *
Piperazine	0	0.00160531	0.00160531	2.50244	0 *
O2	0	0	0	0	0 *

Stream Properties

Property	Units	4	4 Sweet Gas	5	5 Rich Amine	6
Temperature	°F	80 *	118.47	139.172	133.417	100 *
Pressure	psia	1000	999.7	1004.7	1009.7	958.696 *
Molecular Weight	lb/lbmol	23.1347	22.1046	22.1046	31.893	23.1382
Mass Flow	lb/h	508029	595705	595705	319756	511822 *
Std Vapor Volumetric Flow	MMSCFD	200	245.445	245.445	91.3121	201.462
Std Liquid Volumetric Flow	sgpm	2728.1	3334.48	3334.48	659.724	2749.41
Mass Cp	Btu/(lb*°F)	0.678773	0.644913	0.632927	0.700743	0.642027
Net Ideal Gas Heating Value	Btu/ft^3	1181.12	1184.53	1184.53	461.19	1181.94
Gross Ideal Gas Heating Value	Btu/ft^3	1299.56	1304.18	1304.18	542.998	1300.43

Remarks

ProMax 5.0.19050.0
Copyright © 2002-2019 BRE Group, Ltd.
Licensed to Esso Exploration, Inc.

Process Streams Report
All Streams
Tabulated by Total Phase

Client Name:	Husky Amine - Max Capacity	Job:
Location:		
Flowsheet:	MDEA Flowsheet	

Connections

	6 Flash Gas	7	8	9	10
From Block	Rich Flash	Rich Flash	Lean Rich Exchanger	Regenerator	Condenser
To Block	--	Lean Rich Exchanger	Regenerator	Condenser	Regenerator

Stream Composition

Mole Fraction	6 Flash Gas %	7 %	8 %	9 %	10 %
Hydrogen Sulfide	0.000236476	0.000138087	0.000138087	0.0010992	4.41363E-06
N2	0.67889	3.38142E-05	3.38142E-05	0.000276563	9.2465E-09
Carbon Dioxide	5.98962	5.69765	5.69765	46.1432	0.0587723
Methane	69.698	0.0109361	0.0109361	0.0894467	5.77496E-06
Ethane	14.7369	0.00365557	0.00365557	0.0298991	2.15169E-06
Propane	4.58969	0.000931335	0.000931335	0.00761738	4.20698E-07
i-Butane	0.33907	5.22882E-05	5.22882E-05	0.00042766	1.48832E-08
n-Butane	1.03518	0.000237495	0.000237495	0.00194247	1.01852E-07
i-Pentane	0.0955482	1.16747E-05	1.16747E-05	9.54861E-05	2.52353E-09
n-Pentane	0.119369	1.84513E-05	1.84513E-05	0.000150911	4.92332E-09
n-Hexane	0.122643	1.45745E-05	1.45745E-05	0.000119203	2.19867E-09
Water	2.59474	81.121	81.121	53.7257	99.9411
MDEA	0.000192214	10.421	10.421	1.60546E-05	3.18016E-05
Piperazine	2.5056E-05	2.7444	2.7444	2.6639E-05	5.27674E-05
O2	0	0	0	0	0

Mass Fraction	6 Flash Gas %	7 %	8 %	9 %	10 %
Hydrogen Sulfide	0.000366502	0.000147495	0.000147495	0.00124809	8.3425E-06
N2	0.864856	2.96879E-05	2.96879E-05	0.00025812	1.43659E-08
Carbon Dioxide	11.9874	7.85881	7.85881	67.6573	0.143452
Methane	50.8475	0.00549855	0.00549855	0.0478075	5.13818E-06
Ethane	20.1513	0.003445	0.003445	0.0299529	3.58829E-06
Propane	9.2036	0.00128711	0.00128711	0.0111908	1.02886E-06
i-Butane	0.89621	9.5249E-05	9.5249E-05	0.000828136	4.79764E-08
n-Butane	2.73613	0.000432625	0.000432625	0.00376146	3.28322E-07
i-Pentane	0.313495	2.63992E-05	2.63992E-05	0.000229525	1.00978E-08
n-Pentane	0.391651	4.17225E-05	4.17225E-05	0.000362753	1.97005E-08
n-Hexane	0.480622	3.93634E-05	3.93634E-05	0.000342239	1.05083E-08
Water	2.12575	45.8025	45.8025	32.2466	99.8561
MDEA	0.0010416	38.919	38.919	6.37381E-05	0.000210173
Piperazine	9.81463E-05	7.40874	7.40874	7.6447E-05	0.000252079
O2	0	0	0	0	0

Mass Flow	6 Flash Gas lb/h	7 lb/h	8 lb/h	9 lb/h	10 lb/h
Hydrogen Sulfide	0.00113545	0.471167	0.471167	0.458577	0.000929573
N2	2.6794	0.0948371	0.0948371	0.0948387	1.60074E-06
Carbon Dioxide	37.1379	25104.7	25104.7	24858.8	15.9844
Methane	157.53	17.5649	17.5649	17.5655	0.000572528
Ethane	62.4304	11.0049	11.0049	11.0053	0.00039983
Propane	28.5135	4.11163	4.11163	4.11175	0.000114642
i-Butane	2.77653	0.304269	0.304269	0.304275	5.34583E-06
n-Butane	8.47676	1.382	1.382	1.38204	3.65837E-05
i-Pentane	0.971232	0.0843312	0.0843312	0.0843323	1.12516E-06
n-Pentane	1.21337	0.133281	0.133281	0.133283	2.19515E-06
n-Hexane	1.48901	0.125745	0.125745	0.125746	1.1709E-06
Water	6.58576	146314	146314	11848.1	11126.6
MDEA	0.00322696	124325	124325	0.0234188	0.0234188
Piperazine	0.000304065	23667	23667	0.0280883	0.0280883
O2	0	0	0	0	0

Copyright © 2002-2019 BRE Group, Ltd.
Licensed to Esso Exploration, Inc.

Process Streams Report
All Streams
Tabulated by Total Phase

Client Name:	Husky Amine - Max Capacity	Job:
Location:		
Flowsheet:	MDEA Flowsheet	

Std Vapor Volumetric Flow	6 Flash Gas MMSCFD	7 MMSCFD	8 MMSCFD	9 MMSCFD	10 MMSCFD
Hydrogen Sulfide	3.03433E-07	0.000125912	0.000125912	0.000122548	2.48415E-07
N2	0.000871116	3.08331E-05	3.08331E-05	3.08336E-05	5.20426E-10
Carbon Dioxide	0.00768556	5.19533	5.19533	5.14443	0.00330791
Methane	0.0894327	0.00997195	0.00997195	0.00997227	3.25035E-07
Ethane	0.0189095	0.00333329	0.00333329	0.00333341	1.21105E-07
Propane	0.00588925	0.000849226	0.000849226	0.00084925	2.36784E-08
i-Butane	0.000435076	4.76783E-05	4.76783E-05	4.76792E-05	8.37679E-10
n-Butane	0.00132829	0.000216557	0.000216557	0.000216563	5.73258E-09
i-Pentane	0.000122602	1.06454E-05	1.06454E-05	1.06456E-05	1.42033E-10
n-Pentane	0.000153168	1.68246E-05	1.68246E-05	1.68248E-05	2.77102E-10
n-Hexane	0.000157369	1.32896E-05	1.32896E-05	1.32897E-05	1.23749E-10
Water	0.00332943	73.9691	73.9691	5.98979	5.62504
MDEA	2.46638E-07	9.50223	9.50223	1.7899E-06	1.7899E-06
Piperazine	3.21506E-08	2.50244	2.50244	2.96993E-06	2.96993E-06
O2	0	0	0	0	0

Stream Properties

Property	Units	6 Flash Gas	7	8	9	10
Temperature	°F	136.374	136.374	210 *	209.224	120
Pressure	psia	89.6959 *	89.6959	84.6959	26	26
Molecular Weight	lb/lbmol	21.9898	31.907	31.907	30.0151	18.0306
Mass Flow	lb/h	309.808	319446	319446	36742.1	11142.6
Std Vapor Volumetric Flow	MMSCFD	0.128315	91.1837	91.1837	11.1488	5.62835
Std Liquid Volumetric Flow	sgpm	1.67384	658.05	658.05	84.7016	22.2821
Mass Cp	Btu/(lb*°F)	0.477384	0.702528	0.773894	0.297862	0.997563
Net Ideal Gas Heating Value	Btu/ft^3	1033.39	460.385	460.385	1.5674	0.00294189
Gross Ideal Gas Heating Value	Btu/ft^3	1140.78	542.157	542.157	28.7549	50.2836

Remarks

ProMax 5.0.19050.0
Copyright © 2002-2019 BRE Group, Ltd.
Licensed to Esso Exploration, Inc.

Process Streams Report
All Streams
Tabulated by Total Phase

Client Name:	Husky Amine - Max Capacity	Job:	
Location:			
Flowsheet:	MDEA Flowsheet		

Connections

	11	11 Vent Gas	12	13	14
From Block	XCHG-102	Condenser	Regenerator	Reboiler	--
To Block	--	--	Reboiler	Regenerator	XCHG-102

Stream Composition

Mole Fraction	11 %	11 Vent Gas %	12 %	13 %	14 %
Hydrogen Sulfide	0	0.00221538	4.79531E-06	6.98918E-06	0 *
N2	2.2897	0.000558521	0	0	2.33595 *
Carbon Dioxide	2.09972	93.1281	0.101	0.244297	0.00490265 *
Methane	70.1208	0.180635	0	0	71.5074 *
Ethane	13.1583	0.0603803	0	0	13.4159 *
Propane	7.70898	0.0153832	0	0	7.86277 *
i-Butane	0.859887	0.000863662	0	0	0.877226 *
n-Butane	2.2497	0.00392279	0	0	2.29484 *
i-Pentane	0.439942	0.000192835	0	0	0.448848 *
n-Pentane	0.469938	0.000304766	0	0	0.479427 *
n-Hexane	0.579924	0.000240732	0	0	0.591698 *
Water	0.0231808	6.60717	88.7568	99.5208	0.180543 *
MDEA	0	1.5546E-13	8.79402	0.0635286	0.000146088 *
Piperazine	0	9.76336E-14	2.34815	0.17132	0.000341412 *
O2	0	0	0	0	0 *

Mass Fraction	11 %	11 Vent Gas %	12 %	13 %	14 %
Hydrogen Sulfide	0	0.00178772	5.72709E-06	1.30449E-05	0 *
N2	2.77213	0.000370464	0	0	2.88456 *
Carbon Dioxide	3.99373	97.0439	0.155766	0.588803	0.00951104 *
Methane	48.6169	0.0686143	0	0	50.5677 *
Ethane	17.0997	0.0429888	0	0	17.7823 *
Propane	14.6914	0.0160614	0	0	15.2835 *
i-Butane	2.16	0.00118857	0	0	2.24752 *
n-Butane	5.65115	0.00539856	0	0	5.87957 *
i-Pentane	1.37181	0.000329425	0	0	1.42751 *
n-Pentane	1.46534	0.000520639	0	0	1.52476 *
n-Hexane	2.15985	0.0004912	0	0	2.24768 *
Water	0.0180484	2.81837	56.0338	98.1884	0.143374 *
MDEA	0	4.3863E-13	36.7226	0.414585	0.000767368 *
Piperazine	0	1.99124E-13	7.08788	0.808158	0.00129632 *
O2	0	0	0	0	0 *

Mass Flow	11 lb/h	11 Vent Gas lb/h	12 lb/h	13 lb/h	14 lb/h
Hydrogen Sulfide	0	0.457647	0.0194185	0.00589842	0 *
N2	14188.4	0.0948371	0	0	14355.9 *
Carbon Dioxide	20440.8	24842.8	528.145	266.234	47.3346 *
Methane	248832	17.5649	0	0	251666 *
Ethane	87519.9	11.0049	0	0	88499.3 *
Propane	75193.7	4.11163	0	0	76062.9 *
i-Butane	11055.3	0.304269	0	0	11185.5 *
n-Butane	28923.8	1.382	0	0	29261.5 *
i-Pentane	7021.23	0.0843312	0	0	7104.44 *
n-Pentane	7499.95	0.133281	0	0	7588.44 *
n-Hexane	11054.6	0.125745	0	0	11186.3 *
Water	92.3759	721.488	189990	44397	713.546 *
MDEA	0	1.12287E-10	124513	187.459	3.81904 *
Piperazine	0	5.09747E-11	24032.4	365.418	6.45153 *
O2	0	0	0	0	0 *

Copyright © 2002-2019 BRE Group, Ltd.
Licensed to Esso Exploration, Inc.

Process Streams Report
All Streams
Tabulated by Total Phase

Client Name:	Husky Amine - Max Capacity	Job:	
Location:			
Flowsheet:	MDEA Flowsheet		

Std Vapor Volumetric Flow	11 MMSCFD	11 Vent Gas MMSCFD	12 MMSCFD	13 MMSCFD	14 MMSCFD
Hydrogen Sulfide	0	0.000122299	5.1893E-06	1.57627E-06	0 *
N2	4.61287	3.08331E-05	0	0	4.66734 *
Carbon Dioxide	4.23015	5.14113	0.109298	0.0550962	0.00979574 *
Methane	141.267	0.00997195	0	0	142.875 *
Ethane	26.5089	0.00333329	0	0	26.8056 *
Propane	15.5307	0.000849226	0	0	15.7102 *
i-Butane	1.73235	4.76783E-05	0	0	1.75274 *
n-Butane	4.5323	0.000216557	0	0	4.58521 *
i-Pentane	0.886316	1.06454E-05	0	0	0.89682 *
n-Pentane	0.946747	1.68246E-05	0	0	0.957918 *
n-Hexane	1.16833	1.32896E-05	0	0	1.18224 *
Water	0.0467006	0.364748	96.0493	22.4449	0.360733 *
MDEA	0	8.58215E-15	9.51655	0.0143276	0.000291891 *
Piperazine	0	5.38985E-15	2.54108	0.0386377	0.000682158 *
O2	0	0	0	0	0 *

Stream Properties

Property	Units	11	11 Vent Gas	12	13	14
Temperature	°F	120 *	120	254.561	256.272	141 *
Pressure	psia	954.696 *	26	29	29	952.696 *
Molecular Weight	lb/lbmol	23.1382	42.2337	28.536	18.2597	22.6856
Mass Flow	lb/h	511822	25599.5	339063	45216.1	497681 *
Std Vapor Volumetric Flow	MMSCFD	201.462	5.52049	108.216	22.5529	199.805
Std Liquid Volumetric Flow	sgpm	2749.41	62.4195	686.408	90.7772	2731.57
Mass Cp	Btu/(lb*°F)	0.621822	0.216483	0.93913	0.465883	0.623029
Net Ideal Gas Heating Value	Btu/ft^3	1181.94	3.16243	389.371	7.71786	1205.38
Gross Ideal Gas Heating Value	Btu/ft^3	1300.43	6.80564	468.654	58.4249	1326.3

Remarks

ProMax 5.0.19050.0
Copyright © 2002-2019 BRE Group, Ltd.
Licensed to Esso Exploration, Inc.

Process Streams Report
All Streams
Tabulated by Total Phase

Client Name:	Husky Amine - Max Capacity	Job:	
Location:			
Flowsheet:	MDEA Flowsheet		

Connections

	14 Lean Amine	15	16	17	18
From Block	Reboiler	Lean Rich Exchanger	XCHG-102	SPLT-100	SPLT-100
To Block	Lean Rich Exchanger	Recycle	--	XCHG-100	MIX-100

Stream Composition

Mole Fraction	14 Lean Amine %	15 %	16 %	17 %	18 %
Hydrogen Sulfide	4.21772E-06	4.21772E-06	0	4.90595E-05	4.90595E-05
N2	0	0	2.33595	1.69559	1.69559
Carbon Dioxide	0.0632729	0.0632729	0.00490265	2.0605	2.0605
Methane	0	0	71.5074	71.7123	71.7123
Ethane	0	0	13.4159	13.9678	13.9678
Propane	0	0	7.86277	6.67248	6.67248
i-Butane	0	0	0.877226	0.787993	0.787993
n-Butane	0	0	2.29484	1.75162	1.75162
i-Pentane	0	0	0.448848	0.365984	0.365984
n-Pentane	0	0	0.479427	0.369025	0.369025
n-Hexane	0	0	0.591698	0.616677	0.616677
Water	85.9229	85.9229	0.180543	0	0
MDEA	11.0925	11.0925	0.000146088	0	0
Piperazine	2.92126	2.92126	0.000341412	0	0
O2	0	0	0	0	0

Mass Fraction	14 Lean Amine %	15 %	16 %	17 %	18 %
Hydrogen Sulfide	4.60105E-06	4.60105E-06	0	7.40923E-05	7.40923E-05
N2	0	0	2.88456	2.10488	2.10488
Carbon Dioxide	0.0891318	0.0891318	0.00951104	4.01845	4.01845
Methane	0	0	50.5677	50.9805	50.9805
Ethane	0	0	17.7823	18.6118	18.6118
Propane	0	0	15.2835	13.0383	13.0383
i-Butane	0	0	2.24752	2.02957	2.02957
n-Butane	0	0	5.87957	4.5115	4.5115
i-Pentane	0	0	1.42751	1.17012	1.17012
n-Pentane	0	0	1.52476	1.17984	1.17984
n-Hexane	0	0	2.24768	2.35495	2.35495
Water	49.5472	49.5472	0.143374	0	0
MDEA	42.3095	42.3095	0.000767368	0	0
Piperazine	8.05418	8.05418	0.00129632	0	0
O2	0	0	0	0	0

Mass Flow	14 Lean Amine lb/h	15 lb/h	16 lb/h	17 lb/h	18 lb/h
Hydrogen Sulfide	0.01352	0.01352	0	0.458954	0
N2	0	0	14355.9	13038.4	0
Carbon Dioxide	261.911	261.911	47.3346	24891.7	0
Methane	0	0	251666	315791	0
Ethane	0	0	88499.3	115288	0
Propane	0	0	76062.9	80764	0
i-Butane	0	0	11185.5	12571.9	0
n-Butane	0	0	29261.5	27945.8	0
i-Pentane	0	0	7104.44	7248.13	0
n-Pentane	0	0	7588.44	7308.37	0
n-Hexane	0	0	11186.3	14587.4	0
Water	145593	145593	713.546	0	0

Copyright © 2002-2019 BRE Group, Ltd.
Licensed to Esso Exploration, Inc.

Process Streams Report
All Streams
Tabulated by Total Phase

Client Name:	Husky Amine - Max Capacity	Job:	
Location:			
Flowsheet:	MDEA Flowsheet		

Mass Flow	14 Lean Amine lb/h	15 lb/h	16 lb/h	17 lb/h	18 lb/h
MDEA	124325	124325	3.81904	0	0
Piperazine	23667	23667	6.45153	0	0
O2	0	0	0	0	0

Std Vapor Volumetric Flow	14 Lean Amine MMSCFD	15 MMSCFD	16 MMSCFD	17 MMSCFD	18 MMSCFD
Hydrogen Sulfide	3.61303E-06	3.61303E-06	0	0.000122649	0
N2	0	0	4.66734	4.23898	0
Carbon Dioxide	0.0542016	0.0542016	0.00979574	5.15124	0
Methane	0	0	142.875	179.281	0
Ethane	0	0	26.8056	34.9195	0
Propane	0	0	15.7102	16.6812	0
i-Butane	0	0	1.75274	1.96998	0
n-Butane	0	0	4.58521	4.37905	0
i-Pentane	0	0	0.89682	0.914959	0
n-Pentane	0	0	0.957918	0.922563	0
n-Hexane	0	0	1.18224	1.54169	0
Water	73.6044	73.6044	0.360733	0	0
MDEA	9.50223	9.50223	0.000291891	0	0
Piperazine	2.50244	2.50244	0.000682158	0	0
O2	0	0	0	0	0

Stream Properties

Property	Units	14 Lean Amine	15	16	17	18
Temperature	°F	256.272	190.762	119.874	90	90
Pressure	psia	29	24	949.696 *	1014.7	1014.7
Molecular Weight	lb/lbmol	31.2415	31.2415	22.6856	22.5663	22.5663
Mass Flow	lb/h	293847	293847	497681	619435	0
Std Vapor Volumetric Flow	MMSCFD	85.6632	85.6632	199.805	250	0 *
Std Liquid Volumetric Flow	sgpm	595.631	595.631	2731.57	3394.21	0
Mass Cp	Btu/(lb*°F)	0.930913	0.878279	0.634139	0.669295	
Net Ideal Gas Heating Value	Btu/ft^3	489.85	489.85	1205.38	1163.52	1163.52
Gross Ideal Gas Heating Value	Btu/ft^3	576.657	576.657	1326.3	1280.9	1280.9

Remarks

ProMax 5.0.19050.0
Copyright © 2002-2019 BRE Group, Ltd.
Licensed to Esso Exploration, Inc.

Process Streams Report
All Streams
Tabulated by Total Phase

Client Name:	Husky Amine - Max Capacity	Job:	
Location:			
Flowsheet:	MDEA Flowsheet		

Connections

	19	20	21	22	23
From Block	MIX-100	Circulation Pump	Trim Cooler	VLVE-100	--
To Block	--	Trim Cooler	Absorber	--	VLVE-100

Stream Composition

Mole Fraction	19 %	20 %	21 %	22 %	23 %
Hydrogen Sulfide	1.75617E-08	4.16152E-06	4.16152E-06	0	0 *
N2	1.7267	0	0	2.33375	2.33375 *
Carbon Dioxide	0.000991332	0.0624765	0.0624765	0.0006829	0.0006829 *
Methane	73.0027	0	0	71.4498	71.4498 *
Ethane	14.218	0	0	13.4068	13.4068 *
Propane	6.79357	0	0	7.85615	7.85615 *
i-Butane	0.802421	0	0	0.876419	0.876419 *
n-Butane	1.7835	0	0	2.29276	2.29276 *
i-Pentane	0.372722	0	0	0.448435	0.448435 *
n-Pentane	0.375805	0	0	0.478995	0.478995 *
n-Hexane	0.628053	0	0	0.591136	0.591136 *
Water	0.29466	86.098	86.098	0.263749	0.263749 *
MDEA	0.000187525	10.9533	10.9533	0.000199277	0.000199277 *
Piperazine	0.000654041	2.88629	2.88629	0.00106768	0.00106768 *
O2	0	0	0	0	0 *

Mass Fraction	19 %	20 %	21 %	22 %	23 %
Hydrogen Sulfide	2.70767E-08	4.56383E-06	4.56383E-06	0	0 *
N2	2.18826	0	0	2.88241	2.88241 *
Carbon Dioxide	0.00197371	0.0884769	0.0884769	0.00132507	0.00132507 *
Methane	52.9819	0	0	50.5368	50.5368 *
Ethane	19.3408	0	0	17.7738	17.7738 *
Propane	13.5522	0	0	15.2736	15.2736 *
i-Butane	2.1099	0	0	2.2459	2.2459 *
n-Butane	4.68956	0	0	5.8754	5.8754 *
i-Pentane	1.21655	0	0	1.42647	1.42647 *
n-Pentane	1.22662	0	0	1.52369	1.52369 *
n-Hexane	2.44848	0	0	2.24598	2.24598 *
Water	0.240148	49.9115	49.9115	0.209492	0.209492 *
MDEA	0.00101092	42	42	0.00104696	0.00104696 *
Piperazine	0.00254862	8	8	0.0040547	0.0040547 *
O2	0	0	0	0	0 *

Mass Flow	19 lb/h	20 lb/h	21 lb/h	22 lb/h	23 lb/h
Hydrogen Sulfide	0.000161297	0.0135102	0.0135102	0	0 *
N2	13035.6	0	0	14356.4	14356.4 *
Carbon Dioxide	11.7575	261.915	261.915	6.59977	6.59977 *
Methane	315616	0	0	251708	251708 *
Ethane	115214	0	0	88525.9	88525.9 *
Propane	80731.4	0	0	76073	76073 *
i-Butane	12568.8	0	0	11186.1	11186.1 *
n-Butane	27936	0	0	29263.5	29263.5 *
i-Pentane	7247.07	0	0	7104.83	7104.83 *
n-Pentane	7307.02	0	0	7589.02	7589.02 *
n-Hexane	14585.7	0	0	11186.5	11186.5 *
Water	1430.58	147751	147751	1043.42	1043.42 *
MDEA	6.02209	124331	124331	5.21461	5.21461 *
Piperazine	15.1823	23682.1	23682.1	20.1952	20.1952 *
O2	0	0	0	0	0 *

Copyright © 2002-2019 BRE Group, Ltd.
Licensed to Esso Exploration, Inc.

Process Streams Report
All Streams
Tabulated by Total Phase

Client Name:	Husky Amine - Max Capacity	Job:	
Location:			
Flowsheet:	MDEA Flowsheet		

Std Vapor Volumetric Flow	19 MMSCFD	20 MMSCFD	21 MMSCFD	22 MMSCFD	23 MMSCFD
Hydrogen Sulfide	4.31043E-08	3.61039E-06	3.61039E-06	0	0 *
N2	4.23808	0	0	4.6675	4.6675 *
Carbon Dioxide	0.00243317	0.0542025	0.0542025	0.0013658	0.0013658 *
Methane	179.181	0	0	142.9	142.9 *
Ethane	34.8973	0	0	26.8136	26.8136 *
Propane	16.6745	0	0	15.7123	15.7123 *
i-Butane	1.9695	0	0	1.75284	1.75284 *
n-Butane	4.3775	0	0	4.58553	4.58553 *
i-Pentane	0.914826	0	0	0.89687	0.89687 *
n-Pentane	0.922393	0	0	0.957991	0.957991 *
n-Hexane	1.54152	0	0	1.18227	1.18227 *
Water	0.723227	74.6957	74.6957	0.527499	0.527499 *
MDEA	0.000460271	9.50269	9.50269	0.000398555	0.000398555 *
Piperazine	0.00160531	2.50405	2.50405	0.00213536	0.00213536 *
O2	0	0	0	0	0 *

Stream Properties

Property	Units	19	20	21	22	23
Temperature	°F	118.47	192.686	122 *	-16.6937	100 *
Pressure	psia	999.7	1014.7 *	1014.7	15 *	1224.7 *
Molecular Weight	lb/lbmol	22.1046	31.0766	31.0766	22.6811	22.6811
Mass Flow	lb/h	595705	296027	296027	498069	498069
Std Vapor Volumetric Flow	MMSCFD	245.445	86.7566	86.7566	200	200 *
Std Liquid Volumetric Flow	sgpm	3334.48	600	600	2732.66	2732.66
Mass Cp	Btu/(lb*°F)	0.644913	0.876555	0.824511	0.43274 ?	0.730031
Net Ideal Gas Heating Value	Btu/ft^3	1184.53	483.755	483.755	1204.44	1204.44
Gross Ideal Gas Heating Value	Btu/ft^3	1304.18	570.107	570.107	1325.3	1325.3

Remarks

ProMax 5.0.19050.0
Copyright © 2002-2019 BRE Group, Ltd.
Licensed to Esso Exploration, Inc.

Process Streams Report
All Streams
Tabulated by Total Phase

Client Name:	Husky Amine - Max Capacity	Job:	
Location:			
Flowsheet:	MDEA Flowsheet		

Connections

	24	25	26		
From Block	--	VSSL-100	VSSL-100		
To Block	VSSL-100	--	--		

Stream Composition

Mole Fraction	24 %		25 %	26 %		
Hydrogen Sulfide	0	*		0		
N2	0	*		0		
Carbon Dioxide	0	*		0		
Methane	0	*		0		
Ethane	0	*		0		
Propane	0	*		0		
i-Butane	0	*		0		
n-Butane	0	*		0		
i-Pentane	0	*		0		
n-Pentane	0	*		0		
n-Hexane	0	*		0		
Water	86.1729	*		86.1729		
MDEA	10.9434	*		10.9434		
Piperazine	2.88369	*		2.88369		
O2	0	*		0		

Mass Fraction	24 %		25 %	26 %		
Hydrogen Sulfide	0	*		0		
N2	0	*		0		
Carbon Dioxide	0	*		0		
Methane	0	*		0		
Ethane	0	*		0		
Propane	0	*		0		
i-Butane	0	*		0		
n-Butane	0	*		0		
i-Pentane	0	*		0		
n-Pentane	0	*		0		
n-Hexane	0	*		0		
Water	50	*		50		
MDEA	42	*		42		
Piperazine	8	*		8		
O2	0	*		0		

Mass Flow	24 lb/h		25 lb/h	26 lb/h		
Hydrogen Sulfide	0	*		0		
N2	0	*		0		
Carbon Dioxide	0	*		0		
Methane	0	*		0		
Ethane	0	*		0		
Propane	0	*		0		
i-Butane	0	*		0		
n-Butane	0	*		0		
i-Pentane	0	*		0		
n-Pentane	0	*		0		
n-Hexane	0	*		0		
Water	135705	*		135705		
MDEA	113993	*		113993		
Piperazine	21712.9	*		21712.9		
O2	0	*		0		

Copyright © 2002-2019 BRE Group, Ltd.
Licensed to Esso Exploration, Inc.

Process Streams Report
All Streams
Tabulated by Total Phase

Client Name:	Husky Amine - Max Capacity	Job:
Location:		
Flowsheet:	MDEA Flowsheet	

Std Vapor Volumetric Flow	24 MMSCFD	25 MMSCFD	26 MMSCFD		
Hydrogen Sulfide	0 *		0		
N2	0 *		0		
Carbon Dioxide	0 *		0		
Methane	0 *		0		
Ethane	0 *		0		
Propane	0 *		0		
i-Butane	0 *		0		
n-Butane	0 *		0		
i-Pentane	0 *		0		
n-Pentane	0 *		0		
n-Hexane	0 *		0		
Water	68.6058 *		68.6058		
MDEA	8.7125 *		8.7125		
Piperazine	2.29583 *		2.29583		
O2	0 *		0		

Stream Properties

Property	Units	24	25	26		
Temperature	°F	125 *	125	125		
Pressure	psia	100 *	100	100		
Molecular Weight	lb/lbmol	31.0486		31.0486		
Mass Flow	lb/h	271411	0	271411		
Std Vapor Volumetric Flow	MMSCFD	79.6141	0	79.6141		
Std Liquid Volumetric Flow	sgpm	550 *	0	550		
Mass Cp	Btu/(lb*°F)	0.831485		0.831485		
Net Ideal Gas Heating Value	Btu/ft^3	483.319		483.319		
Gross Ideal Gas Heating Value	Btu/ft^3	569.67		569.67		

Remarks

ProMax 5.0.19050.0
Copyright © 2002-2019 BRE Group, Ltd.
Licensed to Esso Exploration, Inc.

Environments Report

Client Name:	Husky Amine - Max Capacity	Job:
Location:		

Project-Wide Constants

Atmospheric Pressure	14.6959 psia	Ideal Gas Reference Pressure	14.6959 psia
Ideal Gas Reference Temperature	60 °F	Ideal Gas Reference Volume	379.484 ft^3/lbmol
Liquid Reference Temperature	60 °F		

Environment [PR Amine Environment]

Environment Settings

Number of Poynting Intervals	0	Phase Tolerance	1 %
Gibbs Excess Model Evaluation Temperature	77 °F	Emulsion Enabled	False

Components

Component Name	Henry's Law Component	Phase Initiator	Component Name	Henry's Law Component	Phase Initiator
Hydrogen Sulfide	True	False	i-Pentane	False	False
N2	True	False	n-Pentane	False	False
Carbon Dioxide	True	False	n-Hexane	False	False
Methane	True	False	Water	False	True
Ethane	True	False	MDEA	False	True
Propane	False	False	Piperazine	False	False
i-Butane	False	False	O2	True	False
n-Butane	False	False			

Electrolytic Reactions

Dissociation of Water	H2O = H+ + HO-
First Dissociation of CO2	CO2 + H2O = (CHO3)- + H+
First Dissociation of H2S	H2S = H+ + HS-
MDEAH+ Proton Transfer	(C5H14NO2)+ = C5H13NO2 + H+
Piperazine Dicarbamate Hydrolysis	(C5H9N2O2)- + (CHO3)- = (C6H8N2O4)2- + H2O
Piperazine Monocarbamate Hydrolysis	(CHO3)- + C4H10N2 = (C5H9N2O2)- + H2O
Piperazine Monocarbamate Protonation	(C5H9N2O2)- + H+ = C5H10N2O2
Second Dissociation of CO2	(CHO3)- = H+ + (CO3)2-
Second Dissociation of H2S	HS- = H+ + (S)2-
1st Protonation of Piperazine	(C4H11N2)+ = C4H10N2 + H+
2nd Protonation of Piperazine	(C4H12N2)2+ = (C4H11N2)+ + H+

Physical Property Method Sets

Liquid Molar Volume	COSTALD	Overall Package	Amine Sweetening - PR
Stability Calculation	Peng-Robinson	Vapor Package	Peng-Robinson
Light Liquid Package	Electrolytic ELR	Heavy Liquid Package	Electrolytic ELR

Remarks

Environment [PR Amine Environment (Syngas)]

Environment Settings

Number of Poynting Intervals	0	Phase Tolerance	1 %
Gibbs Excess Model Evaluation Temperature	77 °F	Emulsion Enabled	False

Components

Component Name	Henry's Law Component	Phase Initiator	Component Name	Henry's Law Component	Phase Initiator
H2	True	False	Methane	True	False
N2	True	False	Water	False	True
Ar	True	False	MDEA	False	True
CO	True	False	Piperazine	False	True

Copyright © 2002-2019 BRE Group, Ltd.
Licensed to Esso Exploration, Inc.

Environments Report

Client Name:	Husky Amine - Max Capacity	Job:
Location:		

Components

Component Name	Henry's Law Component	Phase Initiator	Component Name	Henry's Law Component	Phase Initiator
Carbon Dioxide	True	False			

Electrolytic Reactions

Dissociation of Water	H2O = H+ + HO-
First Dissociation of CO2	CO2 + H2O = (CHO3)- + H+
MDEAH+ Proton Transfer	(C5H14NO2)+ = C5H13NO2 + H+
Piperazine Dicarbamate Hydrolysis	(C5H9N2O2)- + (CHO3)- = (C6H8N2O4)2- + H2O
Piperazine Monocarbamate Hydrolysis	(CHO3)- + C4H10N2 = (C5H9N2O2)- + H2O
Piperazine Monocarbamate Protonation	(C5H9N2O2)- + H+ = C5H10N2O2
Second Dissociation of CO2	(CHO3)- = H+ + (CO3)2-
1st Protonation of Piperazine	(C4H11N2)+ = C4H10N2 + H+
2nd Protonation of Piperazine	(C4H12N2)2+ = (C4H11N2)+ + H+

Physical Property Method Sets

Liquid Molar Volume	COSTALD	Overall Package	Amine Sweetening - PR
Stability Calculation	Peng-Robinson	Vapor Package	Peng-Robinson
Light Liquid Package	Electrolytic ELR	Heavy Liquid Package	Electrolytic ELR

Remarks

ProMax 5.0.19050.0
Copyright © 2002-2019 BRE Group, Ltd.
Licensed to Esso Exploration, Inc.

User Value Sets Report

Client Name:	Husky Amine - Max Capacity	Job:	
Location:			

Pressure Swing User Value Set

User Value [Treated H2S Conc Spec]

Parameter	lb/ft^3	Upper Bound	lb/ft^3
Lower Bound	lb/ft^3	* Enforce Bounds	False

Source Code

CV1 = Grains / SCFM

Calculated Variable [CV1]

Source Moniker	ProMax:ProMax!Project!User Value Sets!Pressure Swing User Value Set!Treated H2S Conc Spec!Properties!Parameter
Value	
Unit	

Calculator (Specifier for Treated H2S Conc Spec) Remarks

Remarks

Cn+ Flow/Frac.49

User Value [CnPlusSum]

* Parameter	0 ton/yr	Upper Bound	ton/yr
Lower Bound	ton/yr	* Enforce Bounds	False

Remarks
This User Value Set was programmatically generated. GUID={A6362B2D-FE3F-482E-AB83-7AC12EFF402F}

Cn+ Flow/Frac.30

User Value [CnPlusSum]

* Parameter	256.379 ton/yr	Upper Bound	ton/yr
Lower Bound	ton/yr	* Enforce Bounds	False

Remarks
This User Value Set was programmatically generated. GUID={18AECA4E-A4C3-4686-A8AB-788CB4E9BF18}

ProMax 5.0.19050.0
Copyright © 2002-2019 BRE Group, Ltd.
Licensed to Esso Exploration, Inc.

Promax Simulation

Storage Tank

CDP
Plant Schematic

Client Name:	XTO ENERGY INC	Job: DELAWARE DEVELOPMENT
Location:	Husky CDP	
Flowsheet:	CDP	

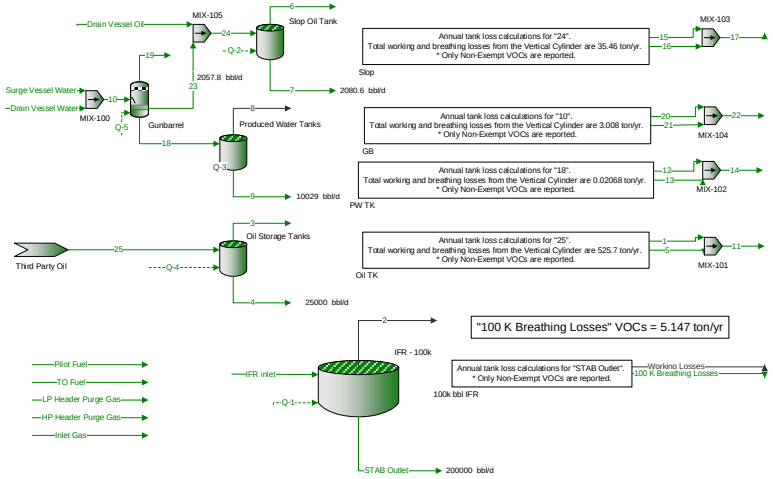

* User Specified Values
? Extrapolated or Approximate Values

ProMax 5.0.19050.0
Copyright © 2002-2019 BRE Group, Ltd.

Licensed to Esso Exploration, Inc.

Process Streams Report
All Streams
Tabulated by Total Phase

Client Name:	XTO ENERGY INC	Job: DELAWARE DEVELOPMENT
Location:	Husky CDP	
Flowsheet:	CDP	

Connections

	Drain Vessel Oil	Drain Vessel Water	HP Header Purge Gas	IFR inlet	Inlet Gas
From Block	--	--	--	--	--
To Block	MIX-105	MIX-100	--	IFR - 100k	--

Stream Composition

Mole Fraction	Drain Vessel Oil %	Drain Vessel Water %	HP Header Purge Gas %	IFR inlet %	Inlet Gas %
Water	0.104 *	99.5 *	0 *	0 *	0 *
Hydrogen Sulfide	0 *	0 *	1E-05 *	0 *	5E-05 *
Nitrogen, Atomic	0 *	0 *	1.82 *	0 *	1.60032 *
Carbon Dioxide	0.002 *	0 *	0 *	0 *	0.170034 *
Methane	0.037 *	0 *	79.37 *	0 *	69.5339 *
Ethane	0.614 *	0.003 *	16.94 *	0.2 *	15.4331 *
Propane	11.752 *	0.059 *	1.87 *	1 *	8.78175 *
Isobutane	4.531 *	0.023 *	0 *	1.2 *	1.06021 *
Butane	12.212 *	0.061 *	0 *	4.7 *	2.43048 *
Isopentane	5.363 *	0.027 *	0 *	3.8 *	0.410082 *
Pentane	6.954 *	0.035 *	0 *	5.4 *	0.370074 *
Cyclopentane	0 *	0 *	0 *	0 *	0 *
i-C6	5.112 *	0.026 *	0 *	4 *	0.090018 *
n-Hexane	3.858 *	0.019 *	0 *	3 *	0.030006 *
Methylcyclopentane	3.273 *	0.016 *	0 *	2.4 *	0.020004 *
Benzene	3.408 *	0.017 *	0 *	2.4 *	0.020004 *
Cyclohexane	7.391 *	0.037 *	0 *	5.3 *	0.030006 *
2,2,4-Trimethylpentane	0 *	0 *	0 *	0 *	0 *
i-C7	2.396 *	0.012 *	0 *	2 *	0.010002 *
Methylcyclohexane	7.6 *	0.038 *	0 *	5.9 *	0.010002 *
n-Heptane	4.571 *	0.023 *	0 *	3.7 *	0 *
Toluene	4.473 *	0.022 *	0 *	3.5 *	0 *
Octane	6.444 *	0.032 *	0 *	6.8 *	0 *
Ethylbenzene	0.19 *	0.001 *	0 *	0.2 *	0 *
m-Xylene	2.005 *	0.01 *	0 *	2.1 *	0 *
Nonane	3.85 *	0.019 *	0 *	6.2 *	0 *
Decane	2.104 *	0.011 *	0 *	5.6 *	0 *
Undecanes Plus	1.756 *	0.009 *	0 *	30.6 *	0 *

Mass Fraction	Drain Vessel Oil %	Drain Vessel Water %	HP Header Purge Gas %	IFR inlet %	Inlet Gas %
Water	0.0222567 *	97.7015 *	0 *	0 *	0 *
Hydrogen Sulfide	0 *	0 *	1.80264E-05 *	0 *	7.49372E-05 *
Nitrogen, Atomic	0 *	0 *	1.34836 *	0 *	0.985733 *
Carbon Dioxide	0.00104559 *	0 *	0 *	0 *	0.329078 *
Methane	0.00705113 *	0 *	67.3481 *	0 *	49.0551 *
Ethane	0.219318 *	0.00491675 *	26.9421 *	0.041116 *	20.4075 *
Propane	6.15593 *	0.141803 *	4.36149 *	0.301478 *	17.0292 *
Isobutane	3.1284 *	0.072863 *	0 *	0.476853 *	2.70989 *
Butane	8.4317 *	0.193245 *	0 *	1.86767 *	6.21229 *
Isopentane	4.59646 *	0.106177 *	0 *	1.87445 *	1.30112 *
Pentane	5.96005 *	0.137637 *	0 *	2.66369 *	1.17418 *
Cyclopentane	0 *	0 *	0 *	0 *	0 *
i-C6	5.23311 *	0.122122 *	0 *	2.3567 *	0.341137 *
n-Hexane	3.9494 *	0.0892429 *	0 *	1.76752 *	0.113712 *
Methylcyclopentane	3.27217 *	0.0733939 *	0 *	1.38094 *	0.0740349 *
Benzene	3.1623 *	0.0723774 *	0 *	1.28171 *	0.0687148 *
Cyclohexane	7.38912 *	0.169723 *	0 *	3.04958 *	0.111052 *
2,2,4-Trimethylpentane	0 *	0 *	0 *	0 *	0 *
i-C7	2.852 *	0.0655382 *	0 *	1.37015 *	0.0440737 *
Methylcyclohexane	8.86441 *	0.203362 *	0 *	3.96062 *	0.043187 *

Copyright © 2002-2019 BRE Group, Ltd.
Licensed to Esso Exploration, Inc.

Process Streams Report
All Streams
Tabulated by Total Phase

Client Name:	XTO ENERGY INC	Job: DELAWARE DEVELOPMENT
Location:	Husky CDP	
Flowsheet:	CDP	

Mass Fraction	Drain Vessel Oil %	Drain Vessel Water %	HP Header Purge Gas %	IFR inlet %	Inlet Gas %
n-Heptane	5.44094 *	0.125615 *	0 *	2.53477 *	0 *
Toluene	4.89583 *	0.110484 *	0 *	2.2048 *	0 *
Octane	8.74412 *	0.199233 *	0 *	5.31061 *	0 *
Ethylbenzene	0.239619 *	0.00578653 *	0 *	0.145168 *	0 *
m-Xylene	2.52861 *	0.0578653 *	0 *	1.52427 *	0 *
Nonane	5.86572 *	0.132821 *	0 *	5.4366 *	0 *
Decane	3.55616 *	0.0853059 *	0 *	5.44751 *	0 *
Undecanes Plus	5.4843 *	0.12897 *	0 *	55.0038 *	0 *

Mass Flow	Drain Vessel Oil lb/h	Drain Vessel Water lb/h	HP Header Purge Gas lb/h	IFR inlet lb/h	Inlet Gas lb/h
Water	0.0560475 *	1693.11 *	0 *	0 *	0 *
Hydrogen Sulfide	0 *	0 *	4.49042E-05 *	0 *	0.0269425 *
Nitrogen, Atomic	0 *	0 *	3.3588 *	0 *	354.405 *
Carbon Dioxide	0.00263304 *	0 *	0 *	0 *	118.315 *
Methane	0.0177564 *	0 *	167.766 *	0 *	17637 *
Ethane	0.552293 *	0.0852045 *	67.1134 *	947.595 *	7337.19 *
Propane	15.502 *	2.45736 *	10.8646 *	6948.14 *	6122.58 *
Isobutane	7.87803 *	1.26268 *	0 *	10990 *	974.299 *
Butane	21.233 *	3.34883 *	0 *	43044.1 *	2233.54 *
Isopentane	11.5749 *	1.83999 *	0 *	43200.2 *	467.797 *
Pentane	15.0088 *	2.38517 *	0 *	61389.8 *	422.158 *
Cyclopentane	0 *	0 *	0 *	0 *	0 *
i-C6	13.1782 *	2.1163 *	0 *	54314.6 *	122.651 *
n-Hexane	9.94551 *	1.54653 *	0 *	40735.9 *	40.8836 *
Methylcyclopentane	8.24007 *	1.27188 *	0 *	31826.4 *	26.6181 *
Benzene	7.96339 *	1.25426 *	0 *	29539.4 *	24.7054 *
Cyclohexane	18.6075 *	2.94121 *	0 *	70283.3 *	39.9272 *
2,2,4-Trimethylpentane	0 *	0 *	0 *	0 *	0 *
i-C7	7.18199 *	1.13574 *	0 *	31577.6 *	15.846 *
Methylcyclohexane	22.3226 *	3.52416 *	0 *	91279.9 *	15.5272 *
n-Heptane	13.7015 *	2.17684 *	0 *	58418.6 *	0 *
Toluene	12.3288 *	1.91463 *	0 *	50813.9 *	0 *
Octane	22.0197 *	3.4526 *	0 *	122393 *	0 *
Ethylbenzene	0.603416 *	0.100277 *	0 *	3345.68 *	0 *
m-Xylene	6.36762 *	1.00277 *	0 *	35129.7 *	0 *
Nonane	14.7712 *	2.30171 *	0 *	125297 *	0 *
Decane	8.95522 *	1.4783 *	0 *	125548 *	0 *
Undecanes Plus	13.8107 *	2.23499 *	0 *	1.26767E+06 *	0 *

Std Vapor Volumetric Flow	Drain Vessel Oil MMSCFD	Drain Vessel Water MMSCFD	HP Header Purge Gas MMSCFD	IFR inlet MMSCFD	Inlet Gas MMSCFD
Water	2.83348E-05 *	0.855952 *	0 *	0 *	0 *
Hydrogen Sulfide	0 *	0 *	1.2E-08 *	0 *	7.2E-06 *
Nitrogen, Atomic	0 *	0 *	0.002184 *	0 *	0.230446 *
Carbon Dioxide	5.44899E-07 *	0 *	0 *	0 *	0.0244849 *
Methane	1.00806E-05 *	0 *	0.095244 *	0 *	10.0129 *
Ethane	0.000167284 *	2.58076E-05 *	0.020328 *	0.287017 *	2.22236 *
Propane	0.00320183 *	0.00050755 *	0.002244 *	1.43509 *	1.26457 *
Isobutane	0.00123447 *	0.000197858 *	0 *	1.7221 *	0.15267 *
Butane	0.00332716 *	0.000524755 *	0 *	6.7449 *	0.34999 *
Isopentane	0.00146115 *	0.000232268 *	0 *	5.45333 *	0.0590518 *
Pentane	0.00189462 *	0.000301089 *	0 *	7.74947 *	0.0532906 *
Cyclopentane	0 *	0 *	0 *	0 *	0 *
i-C6	0.00139276 *	0.000223666 *	0 *	5.74034 *	0.0129626 *
n-Hexane	0.00105111 *	0.000163448 *	0 *	4.30526 *	0.00432086 *
Methylcyclopentane	0.000891728 *	0.000137641 *	0 *	3.44421 *	0.00288057 *
Benzene	0.000928509 *	0.000146243 *	0 *	3.44421 *	0.00288057 *

Copyright © 2002-2019 BRE Group, Ltd.
Licensed to Esso Exploration, Inc.

Process Streams Report
All Streams
Tabulated by Total Phase

Client Name:	XTO ENERGY INC	Job: DELAWARE DEVELOPMENT
Location:	Husky CDP	
Flowsheet:	CDP	

Std Vapor Volumetric Flow	Drain Vessel Oil MMSCFD	Drain Vessel Water MMSCFD	HP Header Purge Gas MMSCFD	IFR inlet MMSCFD	Inlet Gas MMSCFD
Cyclohexane	0.00201368 *	0.000318294 *	0 *	7.60596 *	0.00432086 *
2,2,4-Trimethylpentane	0 *	0 *	0 *	0 *	0 *
i-C7	0.00065279 *	0.00010323 *	0 *	2.87017 *	0.00144029 *
Methylcyclohexane	0.00207062 *	0.000326896 *	0 *	8.46701 *	0.00144029 *
n-Heptane	0.00124537 *	0.000197858 *	0 *	5.30982 *	0 *
Toluene	0.00121867 *	0.000189256 *	0 *	5.0228 *	0 *
Octane	0.00175567 *	0.000275281 *	0 *	9.75859 *	0 *
Ethylbenzene	5.17654E-05 *	8.60253E-06 *	0 *	0.287017 *	0 *
m-Xylene	0.000546262 *	8.60253E-05 *	0 *	3.01368 *	0 *
Nonane	0.00104893 *	0.000163448 *	0 *	8.89753 *	0 *
Decane	0.000573234 *	9.46279E-05 *	0 *	8.03648 *	0 *
Undecanes Plus	0.000478422 *	7.74228E-05 *	0 *	43.9136 *	0 *

Stream Properties

Property	Units	Drain Vessel Oil	Drain Vessel Water	HP Header Purge Gas	IFR inlet	Inlet Gas
Temperature	°F	108 *	105 *	65 *	75 *	65 *
Pressure	psig	30 *	30 *	50 *	0 *	1150 *
Molecular Weight	lb/lbmol	84.1809	18.3469	18.9061	146.265	22.7396
Mass Flow	lb/h	251.823	1732.94	249.103	2.30469E+06	35953.5
Std Vapor Volumetric Flow	MMSCFD	0.027245	0.860253	0.12 *	143.509	14.4 *
Std Liquid Volumetric Flow	sgpm	0.729167 *	3.5 *	1.54615	5833.33 *	198.796
Net Ideal Gas Heating Value	Btu/ft^3	4226.76	21.1798	1049.08	7201.13	1237.03
Gross Ideal Gas Heating Value	Btu/ft^3	4543.46	72.8253	1158.22	7696.66	1359.71

Remarks

ProMax 5.0.19050.0
Copyright © 2002-2019 BRE Group, Ltd.
Licensed to Esso Exploration, Inc.

Process Streams Report
All Streams
Tabulated by Total Phase

Client Name:	XTO ENERGY INC	Job: DELAWARE DEVELOPMENT
Location:	Husky CDP	
Flowsheet:	CDP	

Connections

	LP Header Purge Gas	Pilot Fuel	STAB Outlet	Surge Vessel Water	TO Fuel
From Block	--	--	IFR - 100k	--	--
To Block	--	--	--	MIX-100	--

Stream Composition

Mole Fraction	LP Header Purge Gas %	Pilot Fuel %	STAB Outlet %	Surge Vessel Water %	TO Fuel %
Water	0 *	0 *	0	98.0098 *	0 *
Hydrogen Sulfide	1E-05 *	1E-05 *	0	0 *	1E-05 *
Nitrogen, Atomic	1.82 *	1.82 *	0	0 *	1.82 *
Carbon Dioxide	0 *	0 *	0	0 *	0 *
Methane	79.37 *	79.37 *	0	0 *	79.37 *
Ethane	16.94 *	16.94 *	0.2	0.020002 *	16.94 *
Propane	1.87 *	1.87 *	1	0.080008 *	1.87 *
Isobutane	0 *	0 *	1.2	0.030003 *	0 *
Butane	0 *	0 *	4.7	0.10001 *	0 *
Isopentane	0 *	0 *	3.8	0.060006 *	0 *
Pentane	0 *	0 *	5.4	0.080008 *	0 *
Cyclopentane	0 *	0 *	0	0 *	0 *
i-C6	0 *	0 *	4	0.060006 *	0 *
n-Hexane	0 *	0 *	3	0.050005 *	0 *
Methylcyclopentane	0 *	0 *	2.4	0.040004 *	0 *
Benzene	0 *	0 *	2.4	0.040004 *	0 *
Cyclohexane	0 *	0 *	5.3	0.090009 *	0 *
2,2,4-Trimethylpentane	0 *	0 *	0	0 *	0 *
i-C7	0 *	0 *	2	0.030003 *	0 *
Methylcyclohexane	0 *	0 *	5.9	0.110011 *	0 *
n-Heptane	0 *	0 *	3.7	0.070007 *	0 *
Toluene	0 *	0 *	3.5	0.070007 *	0 *
Octane	0 *	0 *	6.8	0.140014 *	0 *
Ethylbenzene	0 *	0 *	0.2	0 *	0 *
m-Xylene	0 *	0 *	2.1	0.040004 *	0 *
Nonane	0 *	0 *	6.2	0.120012 *	0 *
Decane	0 *	0 *	5.6	0.120012 *	0 *
Undecanes Plus	0 *	0 *	30.6	0.640064 *	0 *

Mass Fraction	LP Header Purge Gas %	Pilot Fuel %	STAB Outlet %	Surge Vessel Water %	TO Fuel %
Water	0 *	0 *	0	85.7427 *	0 *
Hydrogen Sulfide	1.80264E-05 *	1.80264E-05 *	0	0 *	1.80264E-05 *
Nitrogen, Atomic	1.34836 *	1.34836 *	0	0 *	1.34836 *
Carbon Dioxide	0 *	0 *	0	0 *	0 *
Methane	67.3481 *	67.3481 *	0	0 *	67.3481 *
Ethane	26.9421 *	26.9421 *	0.041116	0.0292065 *	26.9421 *
Propane	4.36149 *	4.36149 *	0.301478	0.171323 *	4.36149 *
Isobutane	0 *	0 *	0.476853	0.0846824 *	0 *
Butane	0 *	0 *	1.86767	0.282275 *	0 *
Isopentane	0 *	0 *	1.87445	0.210238 *	0 *
Pentane	0 *	0 *	2.66369	0.280317 *	0 *
Cyclopentane	0 *	0 *	0	0 *	0 *
i-C6	0 *	0 *	2.3567	0.25111 *	0 *
n-Hexane	0 *	0 *	1.76752	0.209259 *	0 *
Methylcyclopentane	0 *	0 *	1.38094	0.163491 *	0 *
Benzene	0 *	0 *	1.28171	0.151742 *	0 *
Cyclohexane	0 *	0 *	3.04958	0.367854 *	0 *
2,2,4-Trimethylpentane	0 *	0 *	0	0 *	0 *
i-C7	0 *	0 *	1.37015	0.145991 *	0 *
Methylcyclohexane	0 *	0 *	3.96062	0.524533 *	0 *

Copyright © 2002-2019 BRE Group, Ltd.
Licensed to Esso Exploration, Inc.

Process Streams Report
All Streams
Tabulated by Total Phase

Client Name:	XTO ENERGY INC	Job: DELAWARE DEVELOPMENT
Location:	Husky CDP	
Flowsheet:	CDP	

Mass Fraction	LP Header Purge Gas %	Pilot Fuel %	STAB Outlet %	Surge Vessel Water %	TO Fuel %
n-Heptane	0 *	0 *	2.53477	0.340647 *	0 *
Toluene	0 *	0 *	2.2048	0.313234 *	0 *
Octane	0 *	0 *	5.31061	0.776663 *	0 *
Ethylbenzene	0 *	0 *	0.145168	0 *	0 *
m-Xylene	0 *	0 *	1.52427	0.206239 *	0 *
Nonane	0 *	0 *	5.4366	0.747456 *	0 *
Decane	0 *	0 *	5.44751	0.829202 *	0 *
Undecanes Plus	0 *	0 *	55.0038	8.17185 *	0 *

Mass Flow	LP Header Purge Gas lb/h	Pilot Fuel lb/h	STAB Outlet lb/h	Surge Vessel Water lb/h	TO Fuel lb/h
Water	0 *	0 *	0	144606 *	0 *
Hydrogen Sulfide	3.59234E-05 *	2.24521E-06 *	0	0 *	0.00021105 *
Nitrogen, Atomic	2.68704 *	0.16794 *	0	0 *	15.7863 *
Carbon Dioxide	0 *	0 *	0	0 *	0 *
Methane	134.213 *	8.3883 *	0	0 *	788.5 *
Ethane	53.6908 *	3.35567 *	947.595	49.2572 *	315.433 *
Propane	8.69168 *	0.54323 *	6948.14	288.939 *	51.0636 *
Isobutane	0 *	0 *	10990	142.818 *	0 *
Butane	0 *	0 *	43044.1	476.061 *	0 *
Isopentane	0 *	0 *	43200.2	354.569 *	0 *
Pentane	0 *	0 *	61389.8	472.759 *	0 *
Cyclopentane	0 *	0 *	0	0 *	0 *
i-C6	0 *	0 *	54314.6	423.501 *	0 *
n-Hexane	0 *	0 *	40735.9	352.918 *	0 *
Methylcyclopentane	0 *	0 *	31826.4	275.73 *	0 *
Benzene	0 *	0 *	29539.4	255.916 *	0 *
Cyclohexane	0 *	0 *	70283.3	620.392 *	0 *
2,2,4-Trimethylpentane	0 *	0 *	0	0 *	0 *
i-C7	0 *	0 *	31577.6	246.217 *	0 *
Methylcyclohexane	0 *	0 *	91279.9	884.633 *	0 *
n-Heptane	0 *	0 *	58418.6	574.506 *	0 *
Toluene	0 *	0 *	50813.9	528.274 *	0 *
Octane	0 *	0 *	122393	1309.85 *	0 *
Ethylbenzene	0 *	0 *	3345.68	0 *	0 *
m-Xylene	0 *	0 *	35129.7	347.826 *	0 *
Nonane	0 *	0 *	125297	1260.6 *	0 *
Decane	0 *	0 *	125548	1398.46 *	0 *
Undecanes Plus	0 *	0 *	1.26767E+06	13782 *	0 *

Std Vapor Volumetric Flow	LP Header Purge Gas MMSCFD	Pilot Fuel MMSCFD	STAB Outlet MMSCFD	Surge Vessel Water MMSCFD	TO Fuel MMSCFD
Water	0 *	0 *	0	73.1057 *	0 *
Hydrogen Sulfide	9.6E-09 *	6E-10 *	0	0 *	5.64E-08 *
Nitrogen, Atomic	0.0017472 *	0.0001092 *	0	0 *	0.0102648 *
Carbon Dioxide	0 *	0 *	0	0 *	0 *
Methane	0.0761952 *	0.0047622 *	0	0 *	0.447647 *
Ethane	0.0162624 *	0.0010164 *	0.287017	0.0149195 *	0.0955416 *
Propane	0.0017952 *	0.0001122 *	1.43509	0.0596781 *	0.0105468 *
Isobutane	0 *	0 *	1.7221	0.0223793 *	0 *
Butane	0 *	0 *	6.7449	0.0745977 *	0 *
Isopentane	0 *	0 *	5.45333	0.0447586 *	0 *
Pentane	0 *	0 *	7.74947	0.0596781 *	0 *
Cyclopentane	0 *	0 *	0	0 *	0 *
i-C6	0 *	0 *	5.74034	0.0447586 *	0 *
n-Hexane	0 *	0 *	4.30526	0.0372988 *	0 *
Methylcyclopentane	0 *	0 *	3.44421	0.0298391 *	0 *
Benzene	0 *	0 *	3.44421	0.0298391 *	0 *

Copyright © 2002-2019 BRE Group, Ltd.
Licensed to Esso Exploration, Inc.

Process Streams Report
All Streams
Tabulated by Total Phase

Client Name:	XTO ENERGY INC	Job: DELAWARE DEVELOPMENT
Location:	Husky CDP	
Flowsheet:	CDP	

Std Vapor Volumetric Flow	LP Header Purge Gas MMSCFD	Pilot Fuel MMSCFD	STAB Outlet MMSCFD	Surge Vessel Water MMSCFD	TO Fuel MMSCFD
Cyclohexane	0 *	0 *	7.60596	0.0671379 *	0 *
2,2,4-Trimethylpentane	0 *	0 *	0	0 *	0 *
i-C7	0 *	0 *	2.87017	0.0223793 *	0 *
Methylcyclohexane	0 *	0 *	8.46701	0.0820574 *	0 *
n-Heptane	0 *	0 *	5.30982	0.0522184 *	0 *
Toluene	0 *	0 *	5.0228	0.0522184 *	0 *
Octane	0 *	0 *	9.75859	0.104437 *	0 *
Ethylbenzene	0 *	0 *	0.287017	0 *	0 *
m-Xylene	0 *	0 *	3.01368	0.0298391 *	0 *
Nonane	0 *	0 *	8.89753	0.0895172 *	0 *
Decane	0 *	0 *	8.03648	0.0895172 *	0 *
Undecanes Plus	0 *	0 *	43.9136	0.477425 *	0 *

Stream Properties

Property	Units	LP Header Purge Gas	Pilot Fuel	STAB Outlet	Surge Vessel Water	TO Fuel
Temperature	°F	65 *	65 *	90	70 *	65 *
Pressure	psig	50 *	50 *	0	5 *	50 *
Molecular Weight	lb/lbmol	18.9061	18.9061	146.265	20.5927	18.9061
Mass Flow	lb/h	199.282	12.4551	2.30469E+06	168652	1170.78
Std Vapor Volumetric Flow	MMSCFD	0.096 *	0.006 *	143.509	74.5902	0.564 *
Std Liquid Volumetric Flow	sgpm	1.23692	0.0773076	5833.33	350 *	7.26692
Net Ideal Gas Heating Value	Btu/ft^3	1049.08	1049.08	7201.13	144.527	1049.08
Gross Ideal Gas Heating Value	Btu/ft^3	1158.22	1158.22	7696.66	203.771	1158.22

Remarks

ProMax 5.0.19050.0
Copyright © 2002-2019 BRE Group, Ltd.
Licensed to Esso Exploration, Inc.

Process Streams Report
All Streams
Tabulated by Total Phase

Client Name:	XTO ENERGY INC	Job: DELAWARE DEVELOPMENT
Location:	Husky CDP	
Flowsheet:	CDP	

Connections

	Working Losses	1	2	3	4
From Block	--	--	IFR - 100k	Oil Storage Tanks	Oil Storage Tanks
To Block	--	MIX-101	--	--	--

Stream Composition

Mole Fraction	Working Losses %	1 %	2 %	3 %	4 %
Water	0	6.37878E-05		0.118382	0.002163
Hydrogen Sulfide	0	0		0	0
Nitrogen, Atomic	0	4.64049E-05		0.00316747	5.46808E-06
Carbon Dioxide	0	0.0202587		0.042562	0.000434948
Methane	0	0.118939		1.53866	0.00607126
Ethane	12.7549	17.7227		18.5782	0.429013
Propane	14.8514	43.8749		43.2527	3.63656
Isobutane	6.83544	7.58786		7.33675	1.58885
Butane	19.0715	18.7533		17.6845	5.57207
Isopentane	6.57194	3.78477		3.48032	2.92067
Pentane	7.40638	3.75873		3.48277	3.87404
Cyclopentane	0	0		0	0
i-C6	2.99987	1.10091		1.01017	2.73625
n-Hexane	1.8799	0.623549		0.552509	2.15632
Methylcyclopentane	1.43385	0.456227		0.428058	1.73755
Benzene	1.22342	0.297187		0.374987	1.63528
Cyclohexane	2.7281	0.749922		0.718858	4.01909
2,2,4-Trimethylpentane	0	0		0	0
i-C7	0.704171	0.123573		0.405143	3.29319
Methylcyclohexane	2.40408	0.439384		0.408278	4.97699
n-Heptane	1.50403	0.142999		0.137528	1.63842
Toluene	1.29729	0.161243		0.188336	2.95664
Octane	2.31542	0.173898		0.160862	6.43924
Ethylbenzene	0.0663565	0.00339528		0.00352267	0.177942
m-Xylene	0.704785	0.0424296		0.0337936	1.88047
Nonane	1.98412	0.0490043		0.0455676	5.83297
Decane	1.75627	0.014763		0.014393	5.61972
Undecanes Plus	9.50676	6.37062E-06		8.56822E-06	36.8701

Mass Fraction	Working Losses %	1 %	2 %	3 %	4 %
Water	0	2.32773E-05		0.0439385	0.000250362
Hydrogen Sulfide	0	0		0	0
Nitrogen, Atomic	0	1.3166E-05		0.00091404	4.92087E-07
Carbon Dioxide	0	0.0180597		0.038591	0.000122986
Methane	0	0.03865		0.508546	0.000625779
Ethane	4.59532	10.7945		11.509	0.0828822
Propane	7.84664	39.1891		39.294	1.03028
Isobutane	4.76023	8.93337		8.78543	0.593328
Butane	13.2814	22.0787		21.1764	2.0808
Isopentane	5.68122	5.53124		5.17327	1.35389
Pentane	6.40257	5.49318		5.17691	1.79582
Cyclopentane	0	0		0	0
i-C6	3.09746	1.92171		1.79347	1.51499
n-Hexane	1.94106	1.08845		0.980933	1.1939
Methylcyclopentane	1.44586	0.777746		0.742203	0.939531
Benzene	1.14501	0.470219		0.603463	0.820694
Cyclohexane	2.75095	1.27842		1.24642	2.17321
2,2,4-Trimethylpentane	0	0		0	0
i-C7	0.845422	0.250815		0.836375	2.12014

Copyright © 2002-2019 BRE Group, Ltd.
Licensed to Esso Exploration, Inc.

Process Streams Report
All Streams
Tabulated by Total Phase

Client Name:	XTO ENERGY INC	Job: DELAWARE DEVELOPMENT
Location:	Husky CDP	
Flowsheet:	CDP	

Mass Fraction	Working Losses %	1 %	2 %	3 %	4 %
Methylcyclohexane	2.82825	0.873873		0.825891	3.1397
n-Heptane	1.80573	0.290244		0.283912	1.0548
Toluene	1.43218	0.300937		0.357512	1.75029
Octane	3.169	0.402367		0.37857	4.72585
Ethylbenzene	0.0844081	0.00730148		0.00770496	0.121376
m-Xylene	0.896515	0.0912439		0.0739151	1.28268
Nonane	3.04904	0.12731		0.120406	4.80657
Decane	2.99405	0.0425479		0.0421907	5.1373
Undecanes Plus	29.9476	3.3927E-05		4.64107E-05	62.281

Mass Flow	Working Losses lb/h	1 lb/h	2 lb/h	3 lb/h	4 lb/h
Water	0	2.25257E-05		0.0152645	0.727633
Hydrogen Sulfide	0	0		0	0
Nitrogen, Atomic	0	1.27409E-05		0.000317544	0.00143016
Carbon Dioxide	0	0.0174766		0.0134068	0.357436
Methane	0	0.037402		0.176672	1.81871
Ethane	0	10.446		3.99832	240.882
Propane	0	37.9237		13.651	2994.34
Isobutane	0	8.64492		3.05212	1724.4
Butane	0	21.3657		7.35681	6047.46
Isopentane	0	5.35264		1.79723	3934.84
Pentane	0	5.31581		1.79849	5219.24
Cyclopentane	0	0		0	0
i-C6	0	1.85966		0.623064	4403.05
n-Hexane	0	1.0533		0.340783	3469.86
Methylcyclopentane	0	0.752633		0.257846	2730.58
Benzene	0	0.455036		0.209647	2385.2
Cyclohexane	0	1.23714		0.433013	6316.05
2,2,4-Trimethylpentane	0	0		0	0
i-C7	0	0.242716		0.290562	6161.8
Methylcyclohexane	0	0.845656		0.28692	9124.97
n-Heptane	0	0.280873		0.098633	3065.6
Toluene	0	0.29122		0.124202	5086.9
Octane	0	0.389375		0.131518	13734.8
Ethylbenzene	0	0.00706572		0.00267675	352.757
m-Xylene	0	0.0882977		0.0256786	3727.89
Nonane	0	0.123199		0.0418298	13969.5
Decane	0	0.0411741		0.0146573	14930.6
Undecanes Plus	0	3.28315E-05		1.61234E-05	181008

Std Vapor Volumetric Flow	Working Losses MMSCFD	1 MMSCFD	2 MMSCFD	3 MMSCFD	4 MMSCFD
Water	0	1.13878E-08		7.71697E-06	0.000367854
Hydrogen Sulfide	0	0		0	0
Nitrogen, Atomic	0	8.28453E-09		2.06477E-07	9.29939E-07
Carbon Dioxide	0	3.61672E-06		2.77448E-06	7.39701E-05
Methane	0	2.12338E-05		0.0001003	0.00103252
Ethane	0	0.00316398		0.00121105	0.0729608
Propane	0	0.00783285		0.00281951	0.618457
Isobutane	0	0.00135464		0.00047826	0.27021
Butane	0	0.00334796		0.0011528	0.947623
Isopentane	0	0.000675684		0.000226871	0.49671
Pentane	0	0.000671035		0.00022703	0.658845
Cyclopentane	0	0		0	0
i-C6	0	0.000196542		6.58498E-05	0.465345
n-Hexane	0	0.00011132		3.60163E-05	0.366719
Methylcyclopentane	0	8.14488E-05		2.79037E-05	0.295499

Copyright © 2002-2019 BRE Group, Ltd.
Licensed to Esso Exploration, Inc.

Process Streams Report
All Streams
Tabulated by Total Phase

Client Name:	XTO ENERGY INC	Job: DELAWARE DEVELOPMENT
Location:	Husky CDP	
Flowsheet:	CDP	

Std Vapor Volumetric Flow	Working Losses MMSCFD	1 MMSCFD	2 MMSCFD	3 MMSCFD	4 MMSCFD
Benzene	0	5.30559E-05		2.44442E-05	0.278107
Cyclohexane	0	0.000133881		4.686E-05	0.683514
2,2,4-Trimethylpentane	0	0		0	0
i-C7	0	2.20611E-05		2.641E-05	0.560062
Methylcyclohexane	0	7.8442E-05		2.66143E-05	0.846421
n-Heptane	0	2.55292E-05		8.96501E-06	0.278641
Toluene	0	2.87862E-05		1.2277E-05	0.502825
Octane	0	3.10455E-05		1.04861E-05	1.0951
Ethylbenzene	0	6.0615E-07		2.29632E-07	0.0302621
m-Xylene	0	7.57482E-06		2.2029E-06	0.319806
Nonane	0	8.7486E-06		2.97041E-06	0.991995
Decane	0	2.6356E-06		9.38232E-07	0.955728
Undecanes Plus	0	1.13733E-09		5.58535E-10	6.27037

Stream Properties

Property	Units	Working Losses	1	2	3	4
Temperature	°F	87.1141	88.526	90 *	80.5 *	80.5
Pressure	psig		6.73324	0 *	0.25 *	0.25
Molecular Weight	lb/lbmol	83.4604	49.3681		48.5381	155.643
Mass Flow	lb/h	0	96.7711	0	34.7407	290632
Std Vapor Volumetric Flow	MMSCFD	0	0.0178527	0	0.00651868	17.0067
Std Liquid Volumetric Flow	sgpm	0	0.367316	0	0.132881	729.167
Net Ideal Gas Heating Value	Btu/ft^3	4204.01	2570.73		2527.26	7649.55
Gross Ideal Gas Heating Value	Btu/ft^3	4521.65	2789.14		2742.44	8171.93

Remarks

ProMax 5.0.19050.0
Copyright © 2002-2019 BRE Group, Ltd.
Licensed to Esso Exploration, Inc.

Process Streams Report
All Streams
Tabulated by Total Phase

Client Name:	XTO ENERGY INC	Job: DELAWARE DEVELOPMENT
Location:	Husky CDP	
Flowsheet:	CDP	

Connections

	5	6	7	8	9
From Block	--	Slop Oil Tank	Slop Oil Tank	Produced Water Tanks	Produced Water Tanks
To Block	MIX-101	--	--	--	--

Stream Composition

Mole Fraction	5 %	6 %	7 %	8 %	9 %
Water	6.37878E-05	4.78542	0.0806739		99.9965
Hydrogen Sulfide	0	0	0		0
Nitrogen, Atomic	4.64049E-05	0	0		0
Carbon Dioxide	0.0202587	0.00312962	3.04166E-05		0
Methane	0.118939	0.114821	0.000439402		0
Ethane	17.7227	16.6735	0.360225		0.000498932
Propane	43.8749	38.8203	2.93851		0.000721773
Isobutane	7.58786	7.23253	1.37034		8.56249E-05
Butane	18.7533	17.3149	4.73374		0.000297052
Isopentane	3.78477	4.2659	3.01764		4.91345E-05
Pentane	3.75873	4.3764	4.06771		2.27285E-05
Cyclopentane	0	0	0		0
i-C6	1.10091	1.40934	3.11534		9.39241E-06
n-Hexane	0.623549	0.83032	2.59942		2.83768E-06
Methylcyclopentane	0.456227	0.635535	2.08382		1.66275E-05
Benzene	0.297187	0.576411	2.02829		0.00122027
Cyclohexane	0.749922	1.05061	4.70188		6.18049E-05
2,2,4-Trimethylpentane	0	0	0		0
i-C7	0.123573	0.244168	1.57057		9.72183E-07
Methylcyclohexane	0.439384	0.599029	5.74301		1.50705E-05
n-Heptane	0.142999	0.392167	3.64905		9.37068E-07
Toluene	0.161243	0.297333	3.62587		0.000479364
Octane	0.173898	0.239711	7.2591		2.57412E-07
Ethylbenzene	0.00339528	0.000108321	0.00411899		2.14946E-08
m-Xylene	0.0424296	0.0497474	2.0759		4.67884E-05
Nonane	0.0490043	0.0663423	6.19099		6.03676E-08
Decane	0.014763	0.0222989	6.1554		6.26148E-09
Undecanes Plus	6.37062E-06	1.39263E-05	32.6279		8.96854E-10

Mass Fraction	5 %	6 %	7 %	8 %	9 %
Water	2.32773E-05	1.75015	0.00972219		99.9873
Hydrogen Sulfide	0	0	0		0
Nitrogen, Atomic	1.3166E-05	0	0		0
Carbon Dioxide	0.0180597	0.0027961	8.95461E-06		0
Methane	0.03865	0.0373944	4.71544E-05		0
Ethane	10.7945	10.178	0.0724575		0.000832684
Propane	39.1891	34.7511	0.866786		0.00176651
Isobutane	8.93337	8.53388	0.532797		0.000276224
Butane	22.0787	20.4304	1.8405		0.000958282
Isopentane	5.53124	6.24819	1.45642		0.000196759
Pentane	5.49318	6.41004	1.96322		9.10163E-05
Cyclopentane	0	0	0		0
i-C6	1.92171	2.46554	1.79588		4.49241E-05
n-Hexane	1.08845	1.45259	1.49848		1.35727E-05
Methylcyclopentane	0.777746	1.08582	1.17315		7.76692E-05
Benzene	0.470219	0.914037	1.05983		0.00529046
Cyclohexane	1.27842	1.79498	2.64706		0.000288699
2,2,4-Trimethylpentane	0	0	0		0
i-C7	0.250815	0.496683	1.05274		5.40684E-06
Methylcyclohexane	0.873873	1.19402	3.77207		8.21292E-05
n-Heptane	0.290244	0.797741	2.44594		5.21154E-06
Toluene	0.300937	0.556158	2.23482		0.00245146

Copyright © 2002-2019 BRE Group, Ltd.
Licensed to Esso Exploration, Inc.

Process Streams Report
All Streams
Tabulated by Total Phase

Client Name:	XTO ENERGY INC	Job: DELAWARE DEVELOPMENT	
Location:	Husky CDP		
Flowsheet:	CDP		

Mass Fraction	5 %	6 %	7 %	8 %	9 %
Octane	0.402367	0.555875	5.54686		1.63201E-06
Ethylbenzene	0.00730148	0.000233457	0.00292524		1.26657E-07
m-Xylene	0.0912439	0.107218	1.47427		0.000275701
Nonane	0.12731	0.172735	5.31159		4.29732E-07
Decane	0.0425479	0.064409	5.85862		4.94476E-08
Undecanes Plus	3.3927E-05	7.43292E-05	57.3838		1.30873E-08

Mass Flow	5 lb/h	6 lb/h	7 lb/h	8 lb/h	9 lb/h
Water	8.8153E-06	0.30038	2.33771		146292
Hydrogen Sulfide	0	0	0		0
Nitrogen, Atomic	4.98607E-06	0	0		0
Carbon Dioxide	0.00683937	0.000479898	0.00215315		0
Methane	0.0146371	0.00641804	0.0113383		0
Ethane	4.08797	1.74685	17.4225		1.2183
Propane	14.8412	5.96437	208.42		2.58458
Isobutane	3.38314	1.46468	128.112		0.404144
Butane	8.36136	3.50649	442.551		1.40206
Isopentane	2.09473	1.07238	350.198		0.287879
Pentane	2.08031	1.10016	472.059		0.133166
Cyclopentane	0	0	0		0
i-C6	0.727766	0.423164	431.823		0.0657286
n-Hexane	0.412204	0.24931	360.31		0.0198582
Methylcyclopentane	0.294539	0.18636	282.085		0.113638
Benzene	0.178076	0.156877	254.837		7.74049
Cyclohexane	0.484147	0.308075	636.49		0.422396
2,2,4-Trimethylpentane	0	0	0		0
i-C7	0.0949856	0.0852463	253.133		0.00791076
Methylcyclohexane	0.330943	0.204931	906.998		0.120163
n-Heptane	0.109918	0.136917	588.128		0.00762502
Toluene	0.113967	0.095454	537.365		3.58674
Octane	0.15238	0.0954054	1333.75		0.0023878
Ethylbenzene	0.00276513	4.00686E-05	0.703378		0.000185312
m-Xylene	0.0345548	0.0184019	354.49		0.403379
Nonane	0.0482134	0.0296466	1277.18		0.000628742
Decane	0.0161132	0.0110546	1408.71		7.23469E-05
Undecanes Plus	1.28484E-05	1.27572E-05	13798		1.91481E-05

Std Vapor Volumetric Flow	5 MMSCFD	6 MMSCFD	7 MMSCFD	8 MMSCFD	9 MMSCFD
Water	4.45657E-09	0.000151857	0.00118183		73.9577
Hydrogen Sulfide	0	0	0		0
Nitrogen, Atomic	3.2421E-09	0	0		0
Carbon Dioxide	1.41538E-06	9.93132E-08	4.45586E-07		0
Methane	8.30975E-06	3.64365E-06	6.43699E-06		0
Ethane	0.00123821	0.000529105	0.0052771		0.000369011
Propane	0.00306534	0.0012319	0.0430475		0.000533826
Isobutane	0.00053013	0.000229512	0.0200748		6.33285E-05
Butane	0.00131021	0.000549459	0.0693467		0.0002197
Isopentane	0.000264425	0.000135371	0.0442068		3.63401E-05
Pentane	0.000262606	0.000138878	0.0595897		1.68101E-05
Cyclopentane	0	0	0		0
i-C6	7.69154E-05	4.47229E-05	0.045638		6.94665E-06
n-Hexane	4.35646E-05	2.63488E-05	0.0380801		2.09875E-06
Methylcyclopentane	3.18745E-05	2.01676E-05	0.0305268		1.22977E-05
Benzene	2.07631E-05	1.82914E-05	0.0297133		0.000902518
Cyclohexane	5.23937E-05	3.33394E-05	0.06888		4.57111E-05
2,2,4-Trimethylpentane	0	0	0		0
i-C7	8.63349E-06	7.74826E-06	0.0230079		7.1903E-07
Methylcyclohexane	3.06978E-05	1.90092E-05	0.084132		1.11462E-05

Copyright © 2002-2019 BRE Group, Ltd.
Licensed to Esso Exploration, Inc.

Process Streams Report
All Streams
Tabulated by Total Phase

Client Name:	XTO ENERGY INC	Job: DELAWARE DEVELOPMENT
Location:	Husky CDP	
Flowsheet:	CDP	

Std Vapor Volumetric Flow	5 MMSCFD	6 MMSCFD	7 MMSCFD	8 MMSCFD	9 MMSCFD
n-Heptane	9.99072E-06	1.24448E-05	0.0534565		6.93058E-07
Toluene	1.12653E-05	9.43535E-06	0.0531169		0.000354539
Octane	1.21495E-05	7.60682E-06	0.106342		1.90383E-07
Ethylbenzene	2.37213E-07	3.43738E-09	6.03409E-05		1.58974E-08
m-Xylene	2.96436E-06	1.57865E-06	0.0304107		3.46048E-05
Nonane	3.42371E-06	2.10526E-06	0.0906946		4.46481E-08
Decane	1.03143E-06	7.07618E-07	0.0901732		4.63101E-09
Undecanes Plus	4.45087E-10	4.41926E-10	0.477981		6.63316E-10

Stream Properties

Property	Units	5	6	7	8	9
Temperature	°F	88.526	90 *	90	90 *	90
Pressure	psig	6.73324	0.25 *	0.25	0.25 *	0.25
Molecular Weight	lb/lbmol	49.3681	49.259	149.489		18.0169
Mass Flow	lb/h	37.8708	17.1631	24045.1	0	146310
Std Vapor Volumetric Flow	MMSCFD	0.00698655	0.00317333	1.46494	0	73.9603
Std Liquid Volumetric Flow	sgpm	0.143747	0.0635628	60.6837	0	292.501
Net Ideal Gas Heating Value	Btu/ft^3	2570.73	2514.26	7355.32		0.110228
Gross Ideal Gas Heating Value	Btu/ft^3	2789.14	2728.57	7860.19		50.4251

Remarks

ProMax 5.0.19050.0
Copyright © 2002-2019 BRE Group, Ltd.
Licensed to Esso Exploration, Inc.

Process Streams Report
All Streams
Tabulated by Total Phase

Client Name:	XTO ENERGY INC	Job: DELAWARE DEVELOPMENT
Location:	Husky CDP	
Flowsheet:	CDP	

Connections

	10	11	12	13	14
From Block	MIX-100	MIX-101	--	--	MIX-102
To Block	Gunbarrel	--	MIX-102	MIX-102	--

Stream Composition

Mole Fraction	10 %	11 %	12 %	13 %	14 %
Water	98.0268	6.37878E-05	99.2003	99.2003	99.2003
Hydrogen Sulfide	0	0	0	0	0
Nitrogen, Atomic	0	4.64049E-05	0	0	0
Carbon Dioxide	0	0.0202587	0	0	0
Methane	0	0.118939	0	0	0
Ethane	0.0198082	17.7227	0.572017	0.572017	0.572017
Propane	0.0797685	43.8749	0.191314	0.191314	0.191314
Isobutane	0.0299232	7.58786	0.00846739	0.00846739	0.00846739
Butane	0.0995652	18.7533	0.0205216	0.0205216	0.0205216
Isopentane	0.0596297	3.78477	0.00129622	0.00129622	0.00129622
Pentane	0.0794948	3.75873	0.000449981	0.000449981	0.000449981
Cyclopentane	0	0	0	0	0
i-C6	0.0596183	1.10091	7.76751E-05	7.76751E-05	7.76751E-05
n-Hexane	0.0496515	0.623549	1.69443E-05	1.69443E-05	1.69443E-05
Methylcyclopentane	0.0397303	0.456227	9.0063E-05	9.0063E-05	9.0063E-05
Benzene	0.0397417	0.297187	0.00461714	0.00461714	0.00461714
Cyclohexane	0.0894046	0.749922	0.000239195	0.000239195	0.000239195
2,2,4-Trimethylpentane	0	0	0	0	0
i-C7	0.0297977	0.123573	7.77898E-07	7.77898E-07	7.77898E-07
Methylcyclohexane	0.10919	0.439384	2.78635E-05	2.78635E-05	2.78635E-05
n-Heptane	0.069471	0.142999	1.71938E-06	1.71938E-06	1.71938E-06
Toluene	0.0694596	0.161243	0.000552716	0.000552716	0.000552716
Octane	0.138782	0.173898	1.48921E-07	1.48921E-07	1.48921E-07
Ethylbenzene	1.14016E-05	0.00339528	8.82636E-09	8.82636E-09	8.82636E-09
m-Xylene	0.0396619	0.0424296	2.26616E-05	2.26616E-05	2.26616E-05
Nonane	0.11886	0.0490043	1.10909E-08	1.10909E-08	1.10909E-08
Decane	0.118769	0.014763	3.66854E-10	3.66854E-10	3.66854E-10
Undecanes Plus	0.632869	6.37062E-06	4.04892E-15	4.04892E-15	4.04892E-15

Mass Fraction	10 %	11 %	12 %	13 %	14 %
Water	85.8643	2.32773E-05	98.4628	98.4628	98.4628
Hydrogen Sulfide	0	0	0	0	0
Nitrogen, Atomic	0	1.3166E-05	0	0	0
Carbon Dioxide	0	0.0180597	0	0	0
Methane	0	0.03865	0	0	0
Ethane	0.0289595	10.7945	0.947647	0.947647	0.947647
Propane	0.171023	39.1891	0.464794	0.464794	0.464794
Isobutane	0.0845622	8.93337	0.027115	0.027115	0.027115
Butane	0.281369	22.0787	0.0657162	0.0657162	0.0657162
Isopentane	0.209179	5.53124	0.00515259	0.00515259	0.00515259
Pentane	0.278866	5.49318	0.00178872	0.00178872	0.00178872
Cyclopentane	0	0	0	0	0
i-C6	0.249798	1.92171	0.000368794	0.000368794	0.000368794
n-Hexane	0.208038	1.08845	8.04499E-05	8.04499E-05	8.04499E-05
Methylcyclopentane	0.162574	0.777746	0.000417607	0.000417607	0.000417607
Benzene	0.150935	0.470219	0.0198705	0.0198705	0.0198705
Cyclohexane	0.365839	1.27842	0.00110911	0.00110911	0.00110911
2,2,4-Trimethylpentane	0	0	0	0	0
i-C7	0.145173	0.250815	4.29454E-06	4.29454E-06	4.29454E-06
Methylcyclohexane	0.521266	0.873873	0.000150732	0.000150732	0.000150732
n-Heptane	0.33846	0.290244	9.49222E-06	9.49222E-06	9.49222E-06
Toluene	0.311172	0.300937	0.00280583	0.00280583	0.00280583
Octane	0.77079	0.402367	9.37236E-07	9.37236E-07	9.37236E-07

Copyright © 2002-2019 BRE Group, Ltd.
Licensed to Esso Exploration, Inc.

Process Streams Report
All Streams
Tabulated by Total Phase

Client Name:	XTO ENERGY INC	Job: DELAWARE DEVELOPMENT
Location:	Husky CDP	
Flowsheet:	CDP	

Mass Fraction	10 %	11 %	12 %	13 %	14 %
Ethylbenzene	5.88536E-05	0.00730148	5.16275E-08	5.16275E-08	5.16275E-08
m-Xylene	0.20473	0.0912439	0.000132553	0.000132553	0.000132553
Nonane	0.741205	0.12731	7.8372E-08	7.8372E-08	7.8372E-08
Decane	0.821636	0.0425479	2.87582E-09	2.87582E-09	2.87582E-09
Undecanes Plus	8.09005	3.3927E-05	5.865E-14	5.865E-14	5.865E-14

Mass Flow	10 lb/h	11 lb/h	12 lb/h	13 lb/h	14 lb/h
Water	146300	3.1341E-05	0.0044928	0.783942	0.788435
Hydrogen Sulfide	0	0	0	0	0
Nitrogen, Atomic	0	1.77269E-05	0	0	0
Carbon Dioxide	0	0.024316	0	0	0
Methane	0	0.0520391	0	0	0
Ethane	49.3424	14.5339	4.32406E-05	0.00754498	0.00758822
Propane	291.396	52.7649	2.12083E-05	0.0037006	0.00372181
Isobutane	144.081	12.0281	1.23724E-06	0.000215884	0.000217122
Butane	479.41	29.7271	2.99859E-06	0.000523219	0.000526218
Isopentane	356.409	7.44737	2.3511E-07	4.10239E-05	4.1259E-05
Pentane	475.144	7.39612	8.16181E-08	1.42414E-05	1.4323E-05
Cyclopentane	0	0	0	0	0
i-C6	425.618	2.58742	1.68278E-08	2.93626E-06	2.95309E-06
n-Hexane	354.464	1.46551	3.67088E-09	6.40526E-07	6.44197E-07
Methylcyclopentane	277.002	1.04717	1.90552E-08	3.3249E-06	3.34396E-06
Benzene	257.17	0.633111	9.06678E-07	0.000158205	0.000159111
Cyclohexane	623.333	1.72129	5.06079E-08	8.83049E-06	8.8811E-06
2,2,4-Trimethylpentane	0	0	0	0	0
i-C7	247.353	0.337702	1.95958E-10	3.41923E-08	3.43883E-08
Methylcyclohexane	888.157	1.1766	6.8778E-09	1.2001E-06	1.20697E-06
n-Heptane	576.683	0.39079	4.33124E-10	7.55752E-08	7.60083E-08
Toluene	530.189	0.405187	1.28028E-07	2.23395E-05	2.24675E-05
Octane	1313.31	0.541755	4.27655E-11	7.46209E-09	7.50485E-09
Ethylbenzene	0.100277	0.00983085	2.35573E-12	4.11048E-10	4.13404E-10
m-Xylene	348.829	0.122852	6.04834E-09	1.05536E-06	1.06141E-06
Nonane	1262.9	0.171413	3.57607E-12	6.23982E-10	6.27558E-10
Decane	1399.94	0.0572873	1.31222E-13	2.28967E-11	2.30279E-11
Undecanes Plus	13784.2	4.568E-05	2.67617E-18	4.6696E-16	4.69636E-16

Std Vapor Volumetric Flow	10 MMSCFD	11 MMSCFD	12 MMSCFD	13 MMSCFD	14 MMSCFD
Water	73.9617	1.58444E-08	2.27133E-06	0.000396321	0.000398593
Hydrogen Sulfide	0	0	0	0	0
Nitrogen, Atomic	0	1.15266E-08	0	0	0
Carbon Dioxide	0	5.03211E-06	0	0	0
Methane	0	2.95436E-05	0	0	0
Ethane	0.0149453	0.00440219	1.30971E-08	2.2853E-06	2.2984E-06
Propane	0.0601857	0.0108982	4.38041E-09	7.64331E-07	7.68711E-07
Isobutane	0.0225772	0.00188477	1.93873E-10	3.38286E-08	3.40225E-08
Butane	0.0751224	0.00465817	4.69872E-10	8.19872E-08	8.24571E-08
Isopentane	0.0449909	0.00094011	2.96788E-11	5.17861E-09	5.20829E-09
Pentane	0.0599792	0.000933641	1.0303E-11	1.79775E-09	1.80805E-09
Cyclopentane	0	0	0	0	0
i-C6	0.0449823	0.000273457	1.77848E-12	3.10325E-10	3.12103E-10
n-Hexane	0.0374623	0.000154885	3.87964E-13	6.76953E-11	6.80832E-11
Methylcyclopentane	0.0299767	0.000113323	2.06212E-12	3.59816E-10	3.61878E-10
Benzene	0.0299853	7.3819E-05	1.05716E-10	1.84462E-08	1.85519E-08
Cyclohexane	0.0674562	0.000186275	5.47671E-12	9.55623E-10	9.61099E-10
2,2,4-Trimethylpentane	0	0	0	0	0
i-C7	0.0224825	3.06946E-05	1.78111E-14	3.10783E-12	3.12564E-12
Methylcyclohexane	0.0823843	0.00010914	6.37976E-13	1.11319E-10	1.11957E-10
n-Heptane	0.0524162	3.552E-05	3.93678E-14	6.86922E-12	6.90859E-12

Copyright © 2002-2019 BRE Group, Ltd.
Licensed to Esso Exploration, Inc.

Process Streams Report
All Streams
Tabulated by Total Phase

Client Name:	XTO ENERGY INC	Job: DELAWARE DEVELOPMENT
Location:	Husky CDP	
Flowsheet:	CDP	

Std Vapor Volumetric Flow	10 MMSCFD	11 MMSCFD	12 MMSCFD	13 MMSCFD	14 MMSCFD
Toluene	0.0524076	4.00515E-05	1.26552E-11	2.20819E-09	2.22085E-09
Octane	0.104712	4.31949E-05	3.40976E-15	5.94964E-13	5.98374E-13
Ethylbenzene	8.60253E-06	8.43363E-07	2.02092E-16	3.52627E-14	3.54648E-14
m-Xylene	0.0299251	1.05392E-05	5.18871E-13	9.05369E-11	9.10558E-11
Nonane	0.0896806	1.21723E-05	2.53943E-16	4.431E-14	4.4564E-14
Decane	0.0896118	3.66703E-06	8.39966E-18	1.46564E-15	1.47404E-15
Undecanes Plus	0.477502	1.58241E-09	9.27059E-23	1.61761E-20	1.62688E-20

Stream Properties

Property	Units	10	11	12	13	14
Temperature	°F	70.3783	88.526	94.126	94.126	94.126
Pressure	psig	5	6.73324	-11.929	-11.929	-11.929
Molecular Weight	lb/lbmol	20.5671	49.3681	18.1502	18.1502	18.1502
Mass Flow	lb/h	170385	134.642	0.00456294	0.79618	0.800743
Std Vapor Volumetric Flow	MMSCFD	75.4505	0.0248393	2.28964E-06	0.000399516	0.000401806
Std Liquid Volumetric Flow	sgpm	353.5	0.511063	9.32593E-06	0.00162727	0.00163659
Net Ideal Gas Heating Value	Btu/ft^3	143.121	2570.73	14.8364	14.8364	14.8364
Gross Ideal Gas Heating Value	Btu/ft^3	202.278	2789.14	66.0786	66.0786	66.0786

Remarks

ProMax 5.0.19050.0
Copyright © 2002-2019 BRE Group, Ltd.
Licensed to Esso Exploration, Inc.

Process Streams Report
All Streams
Tabulated by Total Phase

Client Name:	XTO ENERGY INC	Job: DELAWARE DEVELOPMENT
Location:	Husky CDP	
Flowsheet:	CDP	

Connections

	15	16	17	18	19
From Block	--	--	MIX-103	Gunbarrel	Gunbarrel
To Block	MIX-103	MIX-103	--	Produced Water Tanks	--

Stream Composition

Mole Fraction	15 %	16 %	17 %	18 %	19 %
Water	0.00348855	0.00348855	0.00348855	99.9965	5.36671
Hydrogen Sulfide	0	0	0	0	0
Nitrogen, Atomic	0	0	0	0	0
Carbon Dioxide	0.00207759	0.00207759	0.00207759	0	0
Methane	0.0152456	0.0152456	0.0152456	0	0
Ethane	18.8316	18.8316	18.8316	0.000498932	18.1432
Propane	40.7941	40.7941	40.7941	0.000721773	37.7063
Isobutane	7.3893	7.3893	7.3893	8.56249E-05	6.9914
Butane	17.9884	17.9884	17.9884	0.000297052	16.9176
Isopentane	4.4336	4.4336	4.4336	4.91345E-05	4.2093
Pentane	4.49361	4.49361	4.49361	2.27285E-05	4.3207
Cyclopentane	0	0	0	0	0
i-C6	1.44271	1.44271	1.44271	9.39241E-06	1.39124
n-Hexane	0.869835	0.869835	0.869835	2.83768E-06	0.821803
Methylcyclopentane	0.632586	0.632586	0.632586	1.66275E-05	0.627679
Benzene	0.43016	0.43016	0.43016	0.00122027	0.567856
Cyclohexane	1.02034	1.02034	1.02034	6.18049E-05	1.03702
2,2,4-Trimethylpentane	0	0	0	0	0
i-C7	0.0704894	0.0704894	0.0704894	9.72183E-07	0.241374
Methylcyclohexane	0.595782	0.595782	0.595782	1.50705E-05	0.594426
n-Heptane	0.375672	0.375672	0.375672	9.37068E-07	0.389629
Toluene	0.234605	0.234605	0.234605	0.000479364	0.295135
Octane	0.235731	0.235731	0.235731	2.57412E-07	0.239771
Ethylbenzene	9.49435E-05	9.49435E-05	9.49435E-05	2.14946E-08	1.56413E-05
m-Xylene	0.0564402	0.0564402	0.0564402	4.67884E-05	0.0496098
Nonane	0.0638519	0.0638519	0.0638519	6.03676E-08	0.0667023
Decane	0.0202454	0.0202454	0.0202454	6.26148E-09	0.0225273
Undecanes Plus	8.26695E-06	8.26695E-06	8.26695E-06	8.96854E-10	1.41146E-05

Mass Fraction	15 %	16 %	17 %	18 %	19 %
Water	0.00125059	0.00125059	0.00125059	99.9873	1.98187
Hydrogen Sulfide	0	0	0	0	0
Nitrogen, Atomic	0	0	0	0	0
Carbon Dioxide	0.00181943	0.00181943	0.00181943	0	0
Methane	0.00486681	0.00486681	0.00486681	0	0
Ethane	11.2677	11.2677	11.2677	0.000832684	11.183
Propane	35.795	35.795	35.795	0.00176651	34.0828
Isobutane	8.54624	8.54624	8.54624	0.000276224	8.32976
Butane	20.8048	20.8048	20.8048	0.000958282	20.1561
Isopentane	6.36524	6.36524	6.36524	0.000196759	6.22537
Pentane	6.45139	6.45139	6.45139	9.10163E-05	6.39012
Cyclopentane	0	0	0	0	0
i-C6	2.47396	2.47396	2.47396	4.49241E-05	2.4576
n-Hexane	1.49159	1.49159	1.49159	1.35727E-05	1.4517
Methylcyclopentane	1.05938	1.05938	1.05938	7.76692E-05	1.08285
Benzene	0.668615	0.668615	0.668615	0.00529046	0.909246
Cyclohexane	1.70874	1.70874	1.70874	0.000288699	1.78903
2,2,4-Trimethylpentane	0	0	0	0	0
i-C7	0.14055	0.14055	0.14055	5.40684E-06	0.495784
Methylcyclohexane	1.16404	1.16404	1.16404	8.21292E-05	1.19639
n-Heptane	0.749056	0.749056	0.749056	5.21154E-06	0.800302
Toluene	0.430138	0.430138	0.430138	0.00245146	0.557427

Copyright © 2002-2019 BRE Group, Ltd.
Licensed to Esso Exploration, Inc.

Process Streams Report
All Streams
Tabulated by Total Phase

Client Name:	XTO ENERGY INC	Job: DELAWARE DEVELOPMENT	
Location:	Husky CDP		
Flowsheet:	CDP		

Mass Fraction	15 %	16 %	17 %	18 %	19 %
Octane	0.535822	0.535822	0.535822	1.63201E-06	0.561432
Ethylbenzene	0.000200575	0.000200575	0.000200575	1.26657E-07	3.40393E-05
m-Xylene	0.119234	0.119234	0.119234	0.000275701	0.107963
Nonane	0.162959	0.162959	0.162959	4.29732E-07	0.175365
Decane	0.0573199	0.0573199	0.0573199	4.94476E-08	0.0657028
Undecanes Plus	4.32499E-05	4.32499E-05	4.32499E-05	1.30873E-08	7.60688E-05

Mass Flow	15 lb/h	16 lb/h	17 lb/h	18 lb/h	19 lb/h
Water	9.12599E-05	2.2863E-05	0.000114123	146292	5.22929
Hydrogen Sulfide	0	0	0	0	0
Nitrogen, Atomic	0	0	0	0	0
Carbon Dioxide	0.00013277	3.32623E-05	0.000166032	0	0
Methane	0.000355148	8.89738E-05	0.000444121	0	0
Ethane	0.822245	0.205994	1.02824	1.2183	29.5071
Propane	2.61208	0.654395	3.26648	2.58458	89.9296
Isobutane	0.623648	0.15624	0.779889	0.404144	21.9786
Butane	1.5182	0.380349	1.89855	1.40206	53.1832
Isopentane	0.464494	0.116368	0.580861	0.287879	16.426
Pentane	0.47078	0.117943	0.588723	0.133166	16.8607
Cyclopentane	0	0	0	0	0
i-C6	0.180533	0.0452283	0.225762	0.0657286	6.48453
n-Hexane	0.108846	0.0272689	0.136115	0.0198582	3.8304
Methylcyclopentane	0.0773067	0.0193674	0.0966741	0.113638	2.85716
Benzene	0.0487912	0.0122235	0.0610146	7.74049	2.3991
Cyclohexane	0.124693	0.0312388	0.155931	0.422396	4.72047
2,2,4-Trimethylpentane	0	0	0	0	0
i-C7	0.0102564	0.00256949	0.0128259	0.00791076	1.30816
Methylcyclohexane	0.0849437	0.0212806	0.106224	0.120163	3.15676
n-Heptane	0.0546612	0.0136941	0.0683553	0.00762502	2.11165
Toluene	0.0313887	0.00786369	0.0392524	3.58674	1.47081
Octane	0.0391008	0.00979577	0.0488965	0.0023878	1.48137
Ethylbenzene	1.46366E-05	3.66686E-06	1.83035E-05	0.000185312	8.98147E-05
m-Xylene	0.0087009	0.0021798	0.0108807	0.403379	0.284867
Nonane	0.0118917	0.00297917	0.0148708	0.000628742	0.46271
Decane	0.00418283	0.00104791	0.00523074	7.23469E-05	0.173361
Undecanes Plus	3.1561E-06	7.90685E-07	3.94678E-06	1.91481E-05	0.000200712

Std Vapor Volumetric Flow	15 MMSCFD	16 MMSCFD	17 MMSCFD	18 MMSCFD	19 MMSCFD
Water	4.61364E-08	1.15584E-08	5.76948E-08	73.9577	0.00264366
Hydrogen Sulfide	0	0	0	0	0
Nitrogen, Atomic	0	0	0	0	0
Carbon Dioxide	2.74763E-08	6.88353E-09	3.43598E-08	0	0
Methane	2.01624E-07	5.05121E-08	2.52136E-07	0	0
Ethane	0.00024905	6.23935E-05	0.000311443	0.000369011	0.00893741
Propane	0.000539506	0.00013516	0.000674666	0.000533826	0.0185743
Isobutane	9.77243E-05	2.44825E-05	0.000122207	6.33285E-05	0.00344399
Butane	0.000237899	5.95998E-05	0.000297498	0.0002197	0.00833369
Isopentane	5.86348E-05	1.46895E-05	7.33243E-05	3.63401E-05	0.00207352
Pentane	5.94284E-05	1.48884E-05	7.43167E-05	1.68101E-05	0.00212839
Cyclopentane	0	0	0	0	0
i-C6	1.908E-05	4.78004E-06	2.38601E-05	6.94665E-06	0.00068533
n-Hexane	1.15037E-05	2.88197E-06	1.43856E-05	2.09875E-06	0.000404823
Methylcyclopentane	8.36602E-06	2.09591E-06	1.04619E-05	1.22977E-05	0.000309197
Benzene	5.68891E-06	1.42522E-06	7.11413E-06	0.000902518	0.000279728
Cyclohexane	1.34941E-05	3.38061E-06	1.68747E-05	4.57111E-05	0.000510842
2,2,4-Trimethylpentane	0	0	0	0	0
i-C7	9.3223E-07	2.33548E-07	1.16578E-06	7.1903E-07	0.000118902
Methylcyclohexane	7.87927E-06	1.97396E-06	9.85324E-06	1.11462E-05	0.000292817

ProMax 5.0.19050.0
Copyright © 2002-2019 BRE Group, Ltd.
Licensed to Esso Exploration, Inc.

Process Streams Report
All Streams
Tabulated by Total Phase

Client Name:	XTO ENERGY INC	Job: DELAWARE DEVELOPMENT
Location:	Husky CDP	
Flowsheet:	CDP	

Std Vapor Volumetric Flow	15 MMSCFD	16 MMSCFD	17 MMSCFD	18 MMSCFD	19 MMSCFD
n-Heptane	4.9683E-06	1.24469E-06	6.21299E-06	6.93058E-07	0.000191933
Toluene	3.10268E-06	7.77303E-07	3.87998E-06	0.000354539	0.000145385
Octane	3.11756E-06	7.81031E-07	3.8986E-06	1.90383E-07	0.000118112
Ethylbenzene	1.25564E-09	3.1457E-10	1.57021E-09	1.58974E-08	7.70496E-09
m-Xylene	7.46427E-07	1.87E-07	9.33427E-07	3.46048E-05	2.4438E-05
Nonane	8.44447E-07	2.11556E-07	1.056E-06	4.46481E-08	3.28579E-05
Decane	2.67748E-07	6.70778E-08	3.34825E-07	4.63101E-09	1.1097E-05
Undecanes Plus	1.09331E-10	2.73903E-11	1.36722E-10	6.63316E-10	6.95293E-09

Stream Properties

Property	Units	15	16	17	18	19
Temperature	°F	94.1157	94.1157	94.1157	90	90 *
Pressure	psig	5.31737	5.31737	5.31737	0.25	0.25 *
Molecular Weight	lb/lbmol	50.254	50.254	50.254	18.0169	48.7836
Mass Flow	lb/h	7.29734	1.82818	9.12552	146310	263.856
Std Vapor Volumetric Flow	MMSCFD	0.00132251	0.000331323	0.00165383	73.9603	0.0492604
Std Liquid Volumetric Flow	sgpm	0.0274644	0.00688056	0.034345	292.501	0.980856
Net Ideal Gas Heating Value	Btu/ft^3	2613.42	2613.42	2613.42	0.110228	2484.93
Gross Ideal Gas Heating Value	Btu/ft^3	2834.41	2834.41	2834.41	50.4251	2697.25

Remarks

ProMax 5.0.19050.0
Copyright © 2002-2019 BRE Group, Ltd.
Licensed to Esso Exploration, Inc.

Process Streams Report
All Streams
Tabulated by Total Phase

Client Name:	XTO ENERGY INC	Job: DELAWARE DEVELOPMENT
Location:	Husky CDP	
Flowsheet:	CDP	

Connections

	20	21	22	23	24
From Block	--	--	MIX-104	Gunbarrel	MIX-105
To Block	MIX-104	MIX-104	--	MIX-105	Slop Oil Tank

Stream Composition

Mole Fraction	20 %	21 %	22 %	23 %	24 %
Water	65.9172	65.9172	65.9172	0.0905945	0.0908432
Hydrogen Sulfide	0	0	0	0	0
Nitrogen, Atomic	0	0	0	0	0
Carbon Dioxide	0	0	0	0	3.71155E-05
Methane	0	0	0	0	0.000686637
Ethane	9.44913	9.44913	9.44913	0.391355	0.395486
Propane	13.4615	13.4615	13.4615	2.85088	3.01607
Isobutane	2.15135	2.15135	2.15135	1.32349	1.38302
Butane	5.11432	5.11432	5.11432	4.62005	4.76094
Isopentane	1.19801	1.19801	1.19801	2.97604	3.02034
Pentane	1.19453	1.19453	1.19453	4.01382	4.06838
Cyclopentane	0	0	0	0	0
i-C6	0.369668	0.369668	0.369668	3.07383	3.11165
n-Hexane	0.220361	0.220361	0.220361	2.57173	2.5956
Methylcyclopentane	0.160293	0.160293	0.160293	2.05814	2.08069
Benzene	0.109977	0.109977	0.109977	1.999	2.02515
Cyclohexane	0.254978	0.254978	0.254978	4.64299	4.69399
2,2,4-Trimethylpentane	0	0	0	0	0
i-C7	0.0166311	0.0166311	0.0166311	1.55204	1.5677
Methylcyclohexane	0.145998	0.145998	0.145998	5.69657	5.7319
n-Heptane	0.091491	0.091491	0.091491	3.62444	3.64201
Toluene	0.0568412	0.0568412	0.0568412	3.60252	3.61867
Octane	0.0555235	0.0555235	0.0555235	7.25905	7.24393
Ethylbenzene	3.20796E-06	3.20796E-06	3.20796E-06	0.000595398	0.00411032
m-Xylene	0.0132297	0.0132297	0.0132297	2.07277	2.07152
Nonane	0.0144954	0.0144954	0.0144954	6.22177	6.17775
Decane	0.00444223	0.00444223	0.00444223	6.2185	6.14215
Undecanes Plus	1.3324E-06	1.3324E-06	1.3324E-06	33.1398	32.5574

Mass Fraction	20 %	21 %	22 %	23 %	24 %
Water	42.4844	42.4844	42.4844	0.0108442	0.0109636
Hydrogen Sulfide	0	0	0	0	0
Nitrogen, Atomic	0	0	0	0	0
Carbon Dioxide	0	0	0	0	1.09426E-05
Methane	0	0	0	0	7.37934E-05
Ethane	10.1649	10.1649	10.1649	0.0781886	0.0796656
Propane	21.2363	21.2363	21.2363	0.835272	0.890955
Isobutane	4.47345	4.47345	4.47345	0.511113	0.538504
Butane	10.6346	10.6346	10.6346	1.78419	1.85376
Isopentane	3.09228	3.09228	3.09228	1.42666	1.45984
Pentane	3.0833	3.0833	3.0833	1.92415	1.96639
Cyclopentane	0	0	0	0	0
i-C6	1.13968	1.13968	1.13968	1.76001	1.79636
n-Hexane	0.679373	0.679373	0.679373	1.47252	1.49844
Methylcyclopentane	0.482622	0.482622	0.482622	1.15088	1.17308
Benzene	0.307333	0.307333	0.307333	1.03749	1.05973
Cyclohexane	0.767707	0.767707	0.767707	2.5963	2.64646
2,2,4-Trimethylpentane	0	0	0	0	0
i-C7	0.0596193	0.0596193	0.0596193	1.03331	1.05235
Methylcyclohexane	0.512845	0.512845	0.512845	3.71635	3.77023
n-Heptane	0.327978	0.327978	0.327978	2.41307	2.44476
Toluene	0.187367	0.187367	0.187367	2.20546	2.23362
Octane	0.226903	0.226903	0.226903	5.50944	5.5433

Copyright © 2002-2019 BRE Group, Ltd.
Licensed to Esso Exploration, Inc.

Process Streams Report
All Streams
Tabulated by Total Phase

Client Name:	XTO ENERGY INC	Job: DELAWARE DEVELOPMENT
Location:	Husky CDP	
Flowsheet:	CDP	

Mass Fraction	20 %	21 %	22 %	23 %	24 %
Ethylbenzene	1.21843E-05	1.21843E-05	1.21843E-05	0.000419993	0.00292332
m-Xylene	0.0502483	0.0502483	0.0502483	1.46213	1.47329
Nonane	0.066511	0.066511	0.066511	5.30202	5.30792
Decane	0.022612	0.022612	0.022612	5.87879	5.85449
Undecanes Plus	1.25324E-05	1.25324E-05	1.25324E-05	57.8913	57.3429

Mass Flow	20 lb/h	21 lb/h	22 lb/h	23 lb/h	24 lb/h
Water	0.286841	0.329334	0.616175	2.58204	2.63809
Hydrogen Sulfide	0	0	0	0	0
Nitrogen, Atomic	0	0	0	0	0
Carbon Dioxide	0	0	0	0	0.00263304
Methane	0	0	0	0	0.0177564
Ethane	0.0686298	0.0787967	0.147426	18.6171	19.1693
Propane	0.143381	0.164621	0.308002	198.882	214.384
Isobutane	0.0302033	0.0346777	0.064881	121.698	129.576
Butane	0.0718011	0.0824378	0.154239	424.825	446.057
Isopentane	0.0208781	0.023971	0.0448491	339.695	351.27
Pentane	0.0208174	0.0239014	0.0447188	458.15	473.159
Cyclopentane	0	0	0	0	0
i-C6	0.00769478	0.00883469	0.0165295	419.067	432.246
n-Hexane	0.0045869	0.00526641	0.00985332	350.614	360.56
Methylcyclopentane	0.0032585	0.00374122	0.00699973	274.031	282.271
Benzene	0.00207501	0.00238241	0.00445742	247.031	254.994
Cyclohexane	0.00518331	0.00595117	0.0111345	618.19	636.798
2,2,4-Trimethylpentane	0	0	0	0	0
i-C7	0.00040253	0.000462162	0.000864692	246.037	253.219
Methylcyclohexane	0.00346256	0.00397551	0.00743807	884.88	907.203
n-Heptane	0.0022144	0.00254244	0.00475684	574.564	588.265
Toluene	0.00126504	0.00145245	0.00271749	525.131	537.46
Octane	0.00153198	0.00175893	0.00329091	1311.82	1333.84
Ethylbenzene	8.22644E-08	9.44512E-08	1.76716E-07	0.100002	0.703418
m-Xylene	0.00033926	0.000389519	0.000728779	348.14	354.508
Nonane	0.00044906	0.000515585	0.000964645	1262.44	1277.21
Decane	0.000152669	0.000175286	0.000327955	1399.77	1408.72
Undecanes Plus	8.46147E-08	9.71496E-08	1.81764E-07	13784.2	13798

Std Vapor Volumetric Flow	20 MMSCFD	21 MMSCFD	22 MMSCFD	23 MMSCFD	24 MMSCFD
Water	0.000145012	0.000166495	0.000311507	0.00130535	0.00133369
Hydrogen Sulfide	0	0	0	0	0
Nitrogen, Atomic	0	0	0	0	0
Carbon Dioxide	0	0	0	0	5.44899E-07
Methane	0	0	0	0	1.00806E-05
Ethane	2.07873E-05	2.38667E-05	4.4654E-05	0.00563892	0.00580621
Propane	2.96142E-05	3.40013E-05	6.36155E-05	0.0410776	0.0442794
Isobutane	4.73279E-06	5.43391E-06	1.01667E-05	0.0190698	0.0203043
Butane	1.12511E-05	1.29178E-05	2.41689E-05	0.066569	0.0698962
Isopentane	2.63552E-06	3.02595E-06	5.66147E-06	0.042881	0.0443422
Pentane	2.62787E-06	3.01716E-06	5.64503E-06	0.057834	0.0597286
Cyclopentane	0	0	0	0	0
i-C6	8.13238E-07	9.33712E-07	1.74695E-06	0.04429	0.0456827
n-Hexane	4.84776E-07	5.56591E-07	1.04137E-06	0.0370554	0.0381065
Methylcyclopentane	3.5263E-07	4.0487E-07	7.575E-07	0.0296552	0.0305469
Benzene	2.41941E-07	2.77782E-07	5.19723E-07	0.0288031	0.0297316
Cyclohexane	5.6093E-07	6.44027E-07	1.20496E-06	0.0668996	0.0689133
2,2,4-Trimethylpentane	0	0	0	0	0
i-C7	3.6587E-08	4.20071E-08	7.85941E-08	0.0223629	0.0230157
Methylcyclohexane	3.21183E-07	3.68763E-07	6.89946E-07	0.0820804	0.084151
n-Heptane	2.01272E-07	2.31089E-07	4.32362E-07	0.0522236	0.053469

Copyright © 2002-2019 BRE Group, Ltd.
Licensed to Esso Exploration, Inc.

Process Streams Report
All Streams
Tabulated by Total Phase

Client Name:	XTO ENERGY INC	Job: DELAWARE DEVELOPMENT
Location:	Husky CDP	
Flowsheet:	CDP	

Std Vapor Volumetric Flow	20 MMSCFD	21 MMSCFD	22 MMSCFD	23 MMSCFD	24 MMSCFD
Toluene	1.25046E-07	1.4357E-07	2.68616E-07	0.0519077	0.0531264
Octane	1.22147E-07	1.40242E-07	2.62389E-07	0.104594	0.106349
Ethylbenzene	7.05725E-12	8.10272E-12	1.516E-11	8.57893E-06	6.03444E-05
m-Xylene	2.91043E-08	3.34158E-08	6.25201E-08	0.029866	0.0304123
Nonane	3.18886E-08	3.66126E-08	6.85011E-08	0.0896477	0.0906967
Decane	9.77253E-09	1.12202E-08	2.09928E-08	0.0896007	0.090174
Undecanes Plus	2.93116E-12	3.36539E-12	6.29655E-12	0.477502	0.477981

Stream Properties

Property	Units	20	21	22	23	24
Temperature	°F	83.1379	83.1379	83.1379	90	89.9816
Pressure	psig	-11.8774	-11.8774	-11.8774	0.25	0.25
Molecular Weight	lb/lbmol	27.9518	27.9518	27.9518	150.504	149.273
Mass Flow	lb/h	0.675168	0.775188	1.45036	23810.5	24062.3
Std Vapor Volumetric Flow	MMSCFD	0.000219992	0.000252581	0.000472573	1.44087	1.46812
Std Liquid Volumetric Flow	sgpm	0.00209932	0.00241031	0.00450963	60.0181	60.7473
Net Ideal Gas Heating Value	Btu/ft^3	839.196	839.196	839.196	7403.82	7344.86
Gross Ideal Gas Heating Value	Btu/ft^3	944.106	944.106	944.106	7911.6	7849.09

Remarks

ProMax 5.0.19050.0
Copyright © 2002-2019 BRE Group, Ltd.
Licensed to Esso Exploration, Inc.

Process Streams Report
All Streams
Tabulated by Total Phase

Client Name:	XTO ENERGY INC	Job: DELAWARE DEVELOPMENT
Location:	Husky CDP	
Flowsheet:	CDP	

Connections

	25	100 K Breathing Losses			
From Block	Third Party Oil	--			
To Block	Oil Storage Tanks	--			

Stream Composition

Mole Fraction	25 %	100 K Breathing Losses %			
Water	0.00220753	0			
Hydrogen Sulfide	0	0			
Nitrogen, Atomic	6.67962E-06	0			
Carbon Dioxide	0.000451089	0			
Methane	0.00665848	0			
Ethane	0.435967	12.7549			
Propane	3.65174	14.8514			
Isobutane	1.59105	6.83544			
Butane	5.57671	19.0715			
Isopentane	2.92089	6.57194			
Pentane	3.87389	7.40638			
Cyclopentane	0	0			
i-C6	2.73559	2.99987			
n-Hexane	2.15571	1.8799			
Methylcyclopentane	1.73705	1.43385			
Benzene	1.6348	1.22342			
Cyclohexane	4.01783	2.7281			
2,2,4-Trimethylpentane	0	0			
i-C7	3.29208	0.704171			
Methylcyclohexane	4.97524	2.40408			
n-Heptane	1.63784	1.50403			
Toluene	2.95557	1.29729			
Octane	6.43683	2.31542			
Ethylbenzene	0.177876	0.0663565			
m-Xylene	1.87977	0.704785			
Nonane	5.83076	1.98412			
Decane	5.61757	1.75627			
Undecanes Plus	36.8559	9.50676			

Mass Fraction	25 %	100 K Breathing Losses %			
Water	0.000255584	0			
Hydrogen Sulfide	0	0			
Nitrogen, Atomic	6.01275E-07	0			
Carbon Dioxide	0.000127583	0			
Methane	0.000686486	0			
Ethane	0.0842478	4.59532			
Propane	1.03486	7.84664			
Isobutane	0.594307	4.76023			
Butane	2.08308	13.2814			
Isopentane	1.35435	5.68122			
Pentane	1.79623	6.40257			
Cyclopentane	0	0			
i-C6	1.51502	3.09746			
n-Hexane	1.19387	1.94106			
Methylcyclopentane	0.939507	1.44586			
Benzene	0.820668	1.14501			

ProMax 5.0.19050.0
Copyright © 2002-2019 BRE Group, Ltd.
Licensed to Esso Exploration, Inc.

Process Streams Report
All Streams
Tabulated by Total Phase

Client Name:	XTO ENERGY INC	Job: DELAWARE DEVELOPMENT
Location:	Husky CDP	
Flowsheet:	CDP	

Mass Fraction	25 %	100 K Breathing Losses %			
Cyclohexane	2.1731	2.75095			
2,2,4-Trimethylpentane	0	0			
i-C7	2.11998	0.845422			
Methylcyclohexane	3.13942	2.82825			
n-Heptane	1.05471	1.80573			
Toluene	1.75012	1.43218			
Octane	4.72533	3.169			
Ethylbenzene	0.121362	0.0844081			
m-Xylene	1.28254	0.896515			
Nonane	4.80601	3.04904			
Decane	5.13669	2.99405			
Undecanes Plus	62.2735	29.9476			

Mass Flow	25 lb/h	100 K Breathing Losses lb/h			
Water	0.742897	0			
Hydrogen Sulfide	0	0			
Nitrogen, Atomic	0.00174771	0			
Carbon Dioxide	0.370843	0			
Methane	1.99539	0			
Ethane	244.88	0.0566055			
Propane	3007.99	0.0966555			
Isobutane	1727.45	0.0586368			
Butane	6054.82	0.163602			
Isopentane	3936.64	0.0699817			
Pentane	5221.04	0.0788673			
Cyclopentane	0	0			
i-C6	4403.67	0.0381547			
n-Hexane	3470.2	0.0239101			
Methylcyclopentane	2730.84	0.0178103			
Benzene	2385.41	0.0141044			
Cyclohexane	6316.48	0.0338864			
2,2,4-Trimethylpentane	0	0			
i-C7	6162.09	0.010414			
Methylcyclohexane	9125.26	0.0348386			
n-Heptane	3065.7	0.0222431			
Toluene	5087.02	0.0176417			
Octane	13735	0.039036			
Ethylbenzene	352.76	0.00103974			
m-Xylene	3727.92	0.0110433			
Nonane	13969.5	0.0375583			
Decane	14930.7	0.0368809			
Undecanes Plus	181008	0.368897			

Std Vapor Volumetric Flow	25 MMSCFD	100 K Breathing Losses MMSCFD			
Water	0.000375571	0			
Hydrogen Sulfide	0	0			
Nitrogen, Atomic	1.13642E-06	0			
Carbon Dioxide	7.67446E-05	0			
Methane	0.00113282	0			
Ethane	0.0741719	1.71453E-05			
Propane	0.621277	1.99635E-05			
Isobutane	0.270688	9.18826E-06			
Butane	0.948776	2.5636E-05			

Copyright © 2002-2019 BRE Group, Ltd.
Licensed to Esso Exploration, Inc.

Process Streams Report
All Streams
Tabulated by Total Phase

Client Name:	XTO ENERGY INC	Job: DELAWARE DEVELOPMENT
Location:	Husky CDP	
Flowsheet:	CDP	

Std Vapor Volumetric Flow	25 MMSCFD	100 K Breathing Losses MMSCFD			
Isopentane	0.496936	8.83406E-06			
Pentane	0.659072	9.95572E-06			
Cyclopentane	0	0			
i-C6	0.465411	4.03245E-06			
n-Hexane	0.366755	2.52698E-06			
Methylcyclopentane	0.295527	1.9274E-06			
Benzene	0.278132	1.64453E-06			
Cyclohexane	0.683561	3.66714E-06			
2,2,4-Trimethylpentane	0	0			
i-C7	0.560089	9.46553E-07			
Methylcyclohexane	0.846447	3.23159E-06			
n-Heptane	0.278649	2.02174E-06			
Toluene	0.502838	1.74383E-06			
Octane	1.09511	3.1124E-06			
Ethylbenzene	0.0302623	8.9197E-08			
m-Xylene	0.319808	9.47379E-07			
Nonane	0.991998	2.66708E-06			
Decane	0.955728	2.36079E-06			
Undecanes Plus	6.27037	1.27791E-05			

Stream Properties

Property	Units	25	100 K Breathing Losses			
Temperature	°F	80	87.1141			
Pressure	psig	0.25	-12.6653			
Molecular Weight	lb/lbmol	155.602	83.4604			
Mass Flow	lb/h	290667	1.23181			
Std Vapor Volumetric Flow	MMSCFD	17.0132	0.000134421			
Std Liquid Volumetric Flow	sgpm	729.3	0.00371341			
Net Ideal Gas Heating Value	Btu/ft^3	7647.59	4204.01			
Gross Ideal Gas Heating Value	Btu/ft^3	8169.85	4521.65			

Remarks

ProMax 5.0.19050.0
Copyright © 2002-2019 BRE Group, Ltd.
Licensed to Esso Exploration, Inc.

Promax Simulation

Inlet Oil

TANK BATTERY
Plant Schematic

Client Name:	XTO ENERGY INC	Job: DELAWARE DEVELOPMENT
Location:	Husky CDP	
Flowsheet:	TANK BATTERY	

NM-Delaware Tank Battery (not included in Permit Authorization for Husky CDP)

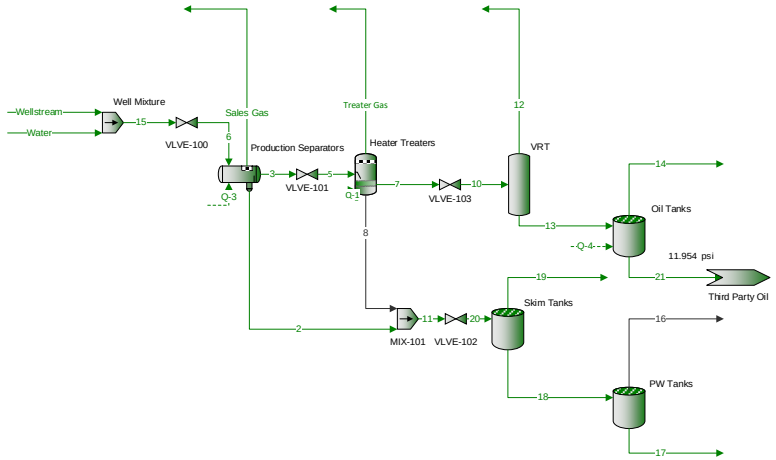

Copyright © 2002-2019 BRE Group, Ltd.
Licensed to Esso Exploration, Inc.

Process Streams Report
All Streams
Tabulated by Total Phase

Client Name:	XTO ENERGY INC	Job: DELAWARE DEVELOPMENT
Location:	Husky CDP	
Flowsheet:	TANK BATTERY	

Connections

	Sales Gas	Treater Gas	Water	Wellstream	2
From Block	Production Separators	Heater Treaters	--	--	Production Separators
To Block	--	--	Well Mixture	Well Mixture	MIX-101

Stream Composition

Mole Fraction	Sales Gas %	Treater Gas %	Water %	Wellstream %	2 %
Water	0.141605	0.249597	100 *	0 *	99.9576
Hydrogen Sulfide	0	0	0 *	0 *	0
Nitrogen, Atomic	1.79921	0.43157	0 *	1.0768 *	2.99972E-06
Carbon Dioxide	0.173664	0.203911	0 *	0.1191 *	0.00137817
Methane	75.9414	39.4697	0 *	46.8087 *	0.0294719
Ethane	13.96	28.4797	0 *	10.579 *	0.00774803
Propane	5.71811	20.7637	0 *	6.8449 *	0.00209315
Isobutane	0.538557	2.35835	0 *	1.1462 *	0.00013752
Butane	1.13246	5.18986	0 *	3.206 *	0.000349955
Isopentane	0.190102	0.899255	0 *	1.2067 *	4.00772E-05
Pentane	0.182772	0.88019	0 *	1.5169 *	1.39669E-05
Cyclopentane	0	0	0 *	0 *	0
i-C6	0.050668	0.24526	0 *	0.9728 *	5.32535E-06
n-Hexane	0.0273535	0.132493	0 *	0.7506 *	1.3575E-06
Methylcyclopentane	0.0209292	0.102881	0 *	0.6037 *	9.59942E-06
Benzene	0.0181644	0.0903102	0 *	0.5686 *	0.000804329
Cyclohexane	0.0353619	0.172389	0 *	1.3794 *	3.8184E-05
2,2,4-Trimethylpentane	0	0	0 *	0 *	0
i-C7	0.0203284	0.0964509	0 *	1.1187 *	1.51041E-06
Methylcyclohexane	0.0200224	0.0965732	0 *	1.6775 *	8.70617E-06
n-Heptane	0.00690097	0.0326075	0 *	0.5525 *	2.45047E-07
Toluene	0.00914037	0.0446481	0 *	0.9939 *	0.00027985
Octane	0.00822504	0.0378607	0 *	2.1476 *	1.09943E-07
Ethylbenzene	0.000175877	0.000829591	0 *	0.0593 *	4.55634E-06
m-Xylene	0.00168656	0.00795747	0 *	0.6264 *	2.67877E-05
Nonane	0.00233116	0.010557	0 *	1.9391 *	3.40406E-08
Decane	0.000773889	0.00334766	0 *	1.8664 *	2.91024E-09
Undecanes Plus	5.49509E-07	1.94771E-06	0 *	12.2392 *	4.76591E-10

Mass Fraction	Sales Gas %	Treater Gas %	Water %	Wellstream %	2 %
Water	0.123264	0.145607	100 *	0 *	99.9451
Hydrogen Sulfide	0	0	0 *	0 *	0
Nitrogen, Atomic	1.21769	0.195744	0 *	0.225974 *	2.33196E-06
Carbon Dioxide	0.369296	0.290596	0 *	0.0785317 *	0.00336631
Methane	58.8664	20.504	0 *	11.2508 *	0.0262412
Ethane	20.2826	27.7305	0 *	4.76597 *	0.0129305
Propane	12.1833	29.6484	0 *	4.5222 *	0.00512271
Isobutane	1.51249	4.43867	0 *	0.998135 *	0.000443622
Butane	3.18042	9.76788	0 *	2.79185 *	0.00112891
Isopentane	0.662725	2.10094	0 *	1.30441 *	0.000160484
Pentane	0.637171	2.0564	0 *	1.63973 *	5.59288E-05
Cyclopentane	0	0	0 *	0 *	0
i-C6	0.210977	0.684404	0 *	1.25601 *	2.54704E-05
n-Hexane	0.113898	0.369724	0 *	0.969122 *	6.49272E-06
Methylcyclopentane	0.0851085	0.280376	0 *	0.761222 *	4.48387E-05
Benzene	0.0685577	0.228432	0 *	0.665443 *	0.00348703
Cyclohexane	0.143799	0.469803	0 *	1.73932 *	0.000178357
2,2,4-Trimethylpentane	0	0	0 *	0 *	0
i-C7	0.0984234	0.312957	0 *	1.67949 *	8.39995E-06
Methylcyclohexane	0.0949915	0.30705	0 *	2.46774 *	4.74441E-05
n-Heptane	0.0334121	0.105803	0 *	0.82946 *	1.36279E-06
Toluene	0.0406933	0.133213	0 *	1.37205 *	0.0014311

Copyright © 2002-2019 BRE Group, Ltd.
Licensed to Esso Exploration, Inc.

Process Streams Report
All Streams
Tabulated by Total Phase

Client Name:	XTO ENERGY INC	Job: DELAWARE DEVELOPMENT
Location:	Husky CDP	
Flowsheet:	TANK BATTERY	

Mass Fraction	Sales Gas %	Treater Gas %	Water %	Wellstream %	2 %
Octane	0.0453973	0.140044	0 *	3.67549 *	6.97021E-07
Ethylbenzene	0.000902211	0.00285199	0 *	0.0943242 *	2.68474E-05
m-Xylene	0.00865167	0.0273564	0 *	0.996369 *	0.000157842
Nonane	0.0144466	0.0438448	0 *	3.72616 *	2.42313E-07
Decane	0.00532042	0.0154238	0 *	3.9787 *	2.29817E-08
Undecanes Plus	6.98077E-06	1.6582E-05	0 *	48.2115 *	6.95442E-09

Mass Flow	Sales Gas lb/h	Treater Gas lb/h	Water lb/h	Wellstream lb/h	2 lb/h
Water	84.0127	13.147	291802 *	0 *	291699
Hydrogen Sulfide	0	0	0 *	0 *	0
Nitrogen, Atomic	829.937	17.6739	0 *	848.411 *	0.00680604
Carbon Dioxide	251.7	26.2381	0 *	294.845 *	9.82487
Methane	40121.4	1851.31	0 *	42240.9 *	76.5873
Ethane	13824	2503.8	0 *	17893.7 *	37.7388
Propane	8303.75	2676.98	0 *	16978.4 *	14.9511
Isobutane	1030.86	400.771	0 *	3747.47 *	1.29475
Butane	2167.67	881.948	0 *	10481.9 *	3.29482
Isopentane	451.692	189.695	0 *	4897.38 *	0.468386
Pentane	434.275	185.674	0 *	6156.32 *	0.163233
Cyclopentane	0	0	0 *	0 *	0
i-C6	143.795	61.7953	0 *	4715.66 *	0.0743377
n-Hexane	77.6288	33.3826	0 *	3638.54 *	0.0189496
Methylcyclopentane	58.0072	25.3154	0 *	2857.98 *	0.130866
Benzene	46.7267	20.6252	0 *	2498.38 *	10.1772
Cyclohexane	98.0088	42.4188	0 *	6530.23 *	0.52055
2,2,4-Trimethylpentane	0	0	0 *	0 *	0
i-C7	67.0822	28.2571	0 *	6305.58 *	0.024516
Methylcyclohexane	64.7432	27.7237	0 *	9265.05 *	0.13847
n-Heptane	22.7726	9.55299	0 *	3114.18 *	0.00397743
Toluene	27.7352	12.0279	0 *	5151.32 *	4.1768
Octane	30.9414	12.6447	0 *	13799.5 *	0.00203432
Ethylbenzene	0.614918	0.257508	0 *	354.137 *	0.0783565
m-Xylene	5.8967	2.47002	0 *	3740.84 *	0.460675
Nonane	9.84633	3.95878	0 *	13989.8 *	0.000707213
Decane	3.62622	1.39263	0 *	14937.9 *	6.70742E-05
Undecanes Plus	0.00475787	0.0014972	0 *	181008 *	2.02971E-05

Std Vapor Volumetric Flow	Sales Gas MMSCFD	Treater Gas MMSCFD	Water MMSCFD	Wellstream MMSCFD	2 MMSCFD
Water	0.0424726	0.00664644	147.52 *	0 *	147.468
Hydrogen Sulfide	0	0	0 *	0 *	0
Nitrogen, Atomic	0.539652	0.0114921	0 *	0.551665 *	4.42551E-06
Carbon Dioxide	0.0520885	0.00542989	0 *	0.0610171 *	0.00203322
Methane	22.7777	1.05103	0 *	23.981 *	0.0434801
Ethane	4.18715	0.758376	0 *	5.41982 *	0.0114307
Propane	1.71508	0.552909	0 *	3.50677 *	0.00308803
Isobutane	0.161534	0.0627998	0 *	0.58722 *	0.000202884
Butane	0.339669	0.138199	0 *	1.64249 *	0.000516291
Isopentane	0.0570188	0.023946	0 *	0.618215 *	5.91262E-05
Pentane	0.0548202	0.0234383	0 *	0.777136 *	2.06055E-05
Cyclopentane	0	0	0 *	0 *	0
i-C6	0.0151972	0.00653096	0 *	0.498384 *	7.85653E-06
n-Hexane	0.00820436	0.00352811	0 *	0.384546 *	2.00272E-06
Methylcyclopentane	0.00627745	0.00273959	0 *	0.309287 *	1.41621E-05
Benzene	0.00544819	0.00240484	0 *	0.291304 *	0.00118663
Cyclohexane	0.0106064	0.0045905	0 *	0.706692 *	5.63332E-05
2,2,4-Trimethylpentane	0	0	0 *	0 *	0
i-C7	0.00609727	0.00256836	0 *	0.573131 *	2.22832E-06
Methylcyclohexane	0.00600549	0.00257162	0 *	0.859414 *	1.28443E-05

Copyright © 2002-2019 BRE Group, Ltd.
Licensed to Esso Exploration, Inc.

Process Streams Report
All Streams
Tabulated by Total Phase

Client Name:	XTO ENERGY INC	Job: DELAWARE DEVELOPMENT
Location:	Husky CDP	
Flowsheet:	TANK BATTERY	

Std Vapor Volumetric Flow	Sales Gas MMSCFD	Treater Gas MMSCFD	Water MMSCFD	Wellstream MMSCFD	2 MMSCFD
n-Heptane	0.00206986	0.000868296	0 *	0.283056 *	3.61519E-07
Toluene	0.00274154	0.00118892	0 *	0.509193 *	0.000412865
Octane	0.002467	0.00100818	0 *	1.10026 *	1.62199E-07
Ethylbenzene	5.27522E-05	2.20909E-05	0 *	0.0303805 *	6.722E-06
m-Xylene	0.000505862	0.000211897	0 *	0.320916 *	3.95201E-05
Nonane	0.000699205	0.000281119	0 *	0.993437 *	5.02204E-08
Decane	0.000232119	8.91437E-05	0 *	0.956191 *	4.2935E-09
Undecanes Plus	1.64819E-07	5.1865E-08	0 *	6.27037 *	7.03117E-10

Stream Properties

Property	Units	Sales Gas	Treater Gas	Water	Wellstream	2
Temperature	°F	65 *	75 *	100 *	97 *	65
Pressure	psig	217	35	250 *	250 *	217
Molecular Weight	lb/lbmol	20.6958	30.8814	18.0153	66.7441	18.0175
Mass Flow	lb/h	68156.8	9029.06	291802	375447	291859
Std Vapor Volumetric Flow	MMSCFD	29.9938	2.66287	147.52	51.2319	147.531
Std Liquid Volumetric Flow	sgpm	396.323	43.4894	583.333 *	1200.12 *	583.986
Net Ideal Gas Heating Value	Btu/ft^3	1132.65	1644	0	3359.7	0.503789
Gross Ideal Gas Heating Value	Btu/ft^3	1247.71	1796.37	50.31	3614.57	50.8414

Remarks

ProMax 5.0.19050.0
Copyright © 2002-2019 BRE Group, Ltd.
Licensed to Esso Exploration, Inc.

Process Streams Report
All Streams
Tabulated by Total Phase

Client Name:	XTO ENERGY INC	Job: DELAWARE DEVELOPMENT
Location:	Husky CDP	
Flowsheet:	TANK BATTERY	

Connections

	3	5	6	7	8
From Block	Production Separators	VLVE-101	VLVE-100	Heater Treaters	Heater Treaters
To Block	VLVE-101	Heater Treaters	Production Separators	VLVE-103	MIX-101

Stream Composition

Mole Fraction	3 %	5 %	6 %	7 %	8 %
Water	0.0461652	0.0461652	74.2232	0.0169858	
Hydrogen Sulfide	0	0	0	0	
Nitrogen, Atomic	0.0565687	0.0565687	0.277564	0.00278016	
Carbon Dioxide	0.0324831	0.0324831	0.0307001	0.0078942	
Methane	5.46346	5.46346	12.0658	0.585746	
Ethane	5.75303	5.75303	2.72692	2.49322	
Propane	8.42578	8.42578	1.76439	6.65609	
Isobutane	2.00437	2.00437	0.295453	1.9536	
Butane	6.13493	6.13493	0.826403	6.27049	
Isopentane	2.64341	2.64341	0.311048	2.89359	
Pentane	3.4026	3.4026	0.391008	3.7644	
Cyclopentane	0	0	0	0	
i-C6	2.27616	2.27616	0.250756	2.56747	
n-Hexane	1.77287	1.77287	0.19348	2.00816	
Methylcyclopentane	1.42735	1.42735	0.155614	1.61733	
Benzene	1.34103	1.34103	0.146567	1.52042	
Cyclohexane	3.27887	3.27887	0.355564	3.72445	
2,2,4-Trimethylpentane	0	0	0	0	
i-C7	2.67118	2.67118	0.288365	3.04049	
Methylcyclohexane	4.02019	4.02019	0.432405	4.58298	
n-Heptane	1.32367	1.32367	0.142417	1.50886	
Toluene	2.38386	2.38386	0.256195	2.71938	
Octane	5.17148	5.17148	0.553581	5.90782	
Ethylbenzene	0.142837	0.142837	0.0152856	0.163206	
m-Xylene	1.50921	1.50921	0.161466	1.72454	
Nonane	4.6766	4.6766	0.499837	5.34588	
Decane	4.50335	4.50335	0.481097	5.14881	
Undecanes Plus	29.5385	29.5385	3.15487	33.7754	

Mass Fraction	3 %	5 %	6 %	7 %	8 %
Water	0.00630938	0.00630938	43.7321	0.00209171	
Hydrogen Sulfide	0	0	0	0	
Nitrogen, Atomic	0.00601095	0.00601095	0.127151	0.000266182	
Carbon Dioxide	0.0108451	0.0108451	0.0441881	0.00237481	
Methane	0.664921	0.664921	6.3306	0.0642324	
Ethane	1.31234	1.31234	2.68171	0.512453	
Propane	2.81862	2.81862	2.54455	2.00626	
Isobutane	0.883794	0.883794	0.56163	0.776159	
Butane	2.7051	2.7051	1.57092	2.49125	
Isopentane	1.44685	1.44685	0.733966	1.42705	
Pentane	1.86239	1.86239	0.922643	1.85652	
Cyclopentane	0	0	0	0	
i-C6	1.48805	1.48805	0.706731	1.51238	
n-Hexane	1.15902	1.15902	0.545305	1.18292	
Methylcyclopentane	0.911309	0.911309	0.428323	0.930412	
Benzene	0.794666	0.794666	0.374431	0.811811	
Cyclohexane	2.09343	2.09343	0.97868	2.14259	
2,2,4-Trimethylpentane	0	0	0	0	
i-C7	2.03053	2.03053	0.945012	2.08254	
Methylcyclohexane	2.99452	2.99452	1.38854	3.07589	
n-Heptane	1.00621	1.00621	0.46672	1.03347	

Copyright © 2002-2019 BRE Group, Ltd.
Licensed to Esso Exploration, Inc.

Process Streams Report
All Streams
Tabulated by Total Phase

Client Name:	XTO ENERGY INC	Job: DELAWARE DEVELOPMENT	
Location:	Husky CDP		
Flowsheet:	TANK BATTERY		

Mass Fraction	3 %	5 %	6 %	7 %	8 %
Toluene	1.66629	1.66629	0.772024	1.71271	
Octane	4.48147	4.48147	2.06812	4.61292	
Ethylbenzene	0.115041	0.115041	0.0530742	0.118438	
m-Xylene	1.21552	1.21552	0.560636	1.25149	
Nonane	4.55026	4.55026	2.09663	4.6867	
Decane	4.86088	4.86088	2.23873	5.0076	
Undecanes Plus	58.9156	58.9156	27.1276	60.6995	

Mass Flow	3 lb/h	5 lb/h	6 lb/h	7 lb/h	8 lb/h
Water	19.3845	19.3845	291802	6.23757	
Hydrogen Sulfide	0	0	0	0	
Nitrogen, Atomic	18.4676	18.4676	848.411	0.793766	
Carbon Dioxide	33.3199	33.3199	294.845	7.08178	
Methane	2042.86	2042.86	42240.9	191.544	
Ethane	4031.96	4031.96	17893.7	1528.16	
Propane	8659.74	8659.74	16978.4	5982.77	
Isobutane	2715.31	2715.31	3747.47	2314.54	
Butane	8310.96	8310.96	10481.9	7429.01	
Isopentane	4445.22	4445.22	4897.38	4255.52	
Pentane	5721.88	5721.88	6156.32	5536.21	
Cyclopentane	0	0	0	0	
i-C6	4571.79	4571.79	4715.66	4509.99	
n-Hexane	3560.89	3560.89	3638.54	3527.51	
Methylcyclopentane	2799.85	2799.85	2857.98	2774.53	
Benzene	2441.48	2441.48	2498.38	2420.85	
Cyclohexane	6431.7	6431.7	6530.23	6389.29	
2,2,4-Trimethylpentane	0	0	0	0	
i-C7	6238.48	6238.48	6305.58	6210.22	
Methylcyclohexane	9200.17	9200.17	9265.05	9172.45	
n-Heptane	3091.4	3091.4	3114.18	3081.85	
Toluene	5119.41	5119.41	5151.32	5107.38	
Octane	13768.6	13768.6	13799.5	13755.9	
Ethylbenzene	353.444	353.444	354.137	353.186	
m-Xylene	3734.48	3734.48	3740.84	3732.01	
Nonane	13979.9	13979.9	13989.8	13976	
Decane	14934.3	14934.3	14937.9	14932.9	
Undecanes Plus	181008	181008	181008	181008	

Std Vapor Volumetric Flow	3 MMSCFD	5 MMSCFD	6 MMSCFD	7 MMSCFD	8 MMSCFD
Water	0.00979984	0.00979984	147.52	0.0031534	
Hydrogen Sulfide	0	0	0	0	
Nitrogen, Atomic	0.0120083	0.0120083	0.551665	0.000516133	
Carbon Dioxide	0.00689544	0.00689544	0.0610171	0.00146555	
Methane	1.15977	1.15977	23.981	0.108743	
Ethane	1.22124	1.22124	5.41982	0.462864	
Propane	1.7886	1.7886	3.50677	1.2357	
Isobutane	0.425483	0.425483	0.58722	0.362683	
Butane	1.30231	1.30231	1.64249	1.16411	
Isopentane	0.561137	0.561137	0.618215	0.537191	
Pentane	0.722295	0.722295	0.777136	0.698857	
Cyclopentane	0	0	0	0	
i-C6	0.483178	0.483178	0.498384	0.476647	
n-Hexane	0.37634	0.37634	0.384546	0.372812	
Methylcyclopentane	0.302995	0.302995	0.309287	0.300256	
Benzene	0.28467	0.28467	0.291304	0.282265	
Cyclohexane	0.69603	0.69603	0.706692	0.691439	
2,2,4-Trimethylpentane	0	0	0	0	
i-C7	0.567031	0.567031	0.573131	0.564463	

Copyright © 2002-2019 BRE Group, Ltd.
Licensed to Esso Exploration, Inc.

Process Streams Report
All Streams
Tabulated by Total Phase

Client Name:	XTO ENERGY INC	Job: DELAWARE DEVELOPMENT
Location:	Husky CDP	
Flowsheet:	TANK BATTERY	

Std Vapor Volumetric Flow	3 MMSCFD	5 MMSCFD	6 MMSCFD	7 MMSCFD	8 MMSCFD
Methylcyclohexane	0.853396	0.853396	0.859414	0.850824	
n-Heptane	0.280986	0.280986	0.283056	0.280117	
Toluene	0.506039	0.506039	0.509193	0.50485	
Octane	1.09779	1.09779	1.10026	1.09678	
Ethylbenzene	0.030321	0.030321	0.0303805	0.0302989	
m-Xylene	0.320371	0.320371	0.320916	0.320159	
Nonane	0.992738	0.992738	0.993437	0.992457	
Decane	0.955959	0.955959	0.956191	0.95587	
Undecanes Plus	6.27037	6.27037	6.27037	6.27037	

Stream Properties

Property	Units	3	5	6	7	8
Temperature	°F	65	58.4047	97.4936	75	75
Pressure	psig	217	35 *	217 *	35	35
Molecular Weight	lb/lbmol	131.816	131.816	30.576	146.294	
Mass Flow	lb/h	307233	307233	667249	298204	0
Std Vapor Volumetric Flow	MMSCFD	21.2278	21.2278	198.752	18.5649	0
Std Liquid Volumetric Flow	sgpm	803.141	803.141	1783.45	759.651	0
Net Ideal Gas Heating Value	Btu/ft^3	6504.55	6504.55	866.022	7201.72	
Gross Ideal Gas Heating Value	Btu/ft^3	6956.86	6956.86	969.061	7697.06	

Remarks

ProMax 5.0.19050.0
Copyright © 2002-2019 BRE Group, Ltd.
Licensed to Esso Exploration, Inc.

Process Streams Report
All Streams
Tabulated by Total Phase

Client Name:	XTO ENERGY INC	Job: DELAWARE DEVELOPMENT
Location:	Husky CDP	
Flowsheet:	TANK BATTERY	

Connections

	10	11	12	13	14
From Block	VLVE-103	MIX-101	VRT	VRT	Oil Tanks
To Block	VRT	VLVE-102	--	Oil Tanks	--

Stream Composition

Mole Fraction	10 %	11 %	12 %	13 %	14 %
Water	0.0169858	99.9576	0.197902	0.0047749	0.120365
Hydrogen Sulfide	0	0	0	0	0
Nitrogen, Atomic	0.00278016	2.99972E-06	0.0426289	9.05617E-05	0.00386715
Carbon Dioxide	0.0078942	0.00137817	0.104153	0.00139721	0.0439942
Methane	0.585746	0.0294719	8.62532	0.0431142	1.68445
Ethane	2.49322	0.00774803	27.0609	0.835024	18.8016
Propane	6.65609	0.00209315	38.4454	4.51046	43.1726
Isobutane	1.9536	0.00013752	5.48974	1.71493	7.2922
Butane	6.27049	0.000349955	12.6923	5.83705	17.5583
Isopentane	2.89359	4.00772E-05	2.31938	2.93234	3.44801
Pentane	3.7644	1.39669E-05	2.27933	3.86464	3.44827
Cyclopentane	0	0	0	0	0
i-C6	2.56747	5.32535E-06	0.635767	2.69785	0.998773
n-Hexane	2.00816	1.3575E-06	0.340298	2.12073	0.545806
Methylcyclopentane	1.61733	9.59942E-06	0.266637	1.7085	0.423064
Benzene	1.52042	0.000804329	0.232793	1.60733	0.370544
Cyclohexane	3.72445	3.8184E-05	0.442583	3.94596	0.710117
2,2,4-Trimethylpentane	0	0	0	0	0
i-C7	3.04049	1.51041E-06	0.243931	3.22924	0.399851
Methylcyclohexane	4.58298	8.70617E-06	0.243242	4.87589	0.402771
n-Heptane	1.50886	2.45047E-07	0.0813996	1.6052	0.135632
Toluene	2.71938	0.00027985	0.111654	2.89539	0.185746
Octane	5.90782	1.09943E-07	0.0912274	6.30041	0.158352
Ethylbenzene	0.163206	4.55634E-06	0.00200256	0.174086	0.00346794
m-Xylene	1.72454	2.67877E-05	0.0191844	1.83964	0.0332664
Nonane	5.34588	3.40406E-08	0.0246884	5.70504	0.0447706
Decane	5.14881	2.91024E-09	0.0075262	5.49582	0.0141184
Undecanes Plus	33.7754	4.76591E-10	3.27957E-06	36.0551	8.2896E-06

Mass Fraction	10 %	11 %	12 %	13 %	14 %
Water	0.00209171	99.9451	0.0830999	0.000561231	0.0448049
Hydrogen Sulfide	0	0	0	0	0
Nitrogen, Atomic	0.000266182	2.33196E-06	0.0139171	8.27593E-06	0.00111921
Carbon Dioxide	0.00237481	0.00336631	0.106839	0.000401186	0.0400063
Methane	0.0642324	0.0262412	3.2252	0.00451261	0.55836
Ethane	0.512453	0.0129305	18.9658	0.163815	11.6816
Propane	2.00626	0.00512271	39.514	1.29764	39.336
Isobutane	0.776159	0.000443622	7.43711	0.650315	8.75763
Butane	2.49125	0.00112891	17.1946	2.21346	21.0868
Isopentane	1.42705	0.000160484	3.90042	1.38032	5.14024
Pentane	1.85652	5.59288E-05	3.83306	1.81917	5.14063
Cyclopentane	0	0	0	0	0
i-C6	1.51238	2.54704E-05	1.277	1.51683	1.77843
n-Hexane	1.18292	6.49272E-06	0.683523	1.19235	0.971868
Methylcyclopentane	0.930412	4.48387E-05	0.523039	0.938109	0.735691
Benzene	0.811811	0.00348703	0.423836	0.819141	0.598058
Cyclohexane	2.14259	0.000178357	0.868178	2.16666	1.23486
2,2,4-Trimethylpentane	0	0	0	0	0
i-C7	2.08254	8.39995E-06	0.569709	2.11112	0.827866
Methylcyclohexane	3.07589	4.74441E-05	0.556671	3.12349	0.817134
n-Heptane	1.03347	1.36279E-06	0.190112	1.0494	0.280818
Toluene	1.71271	0.0014311	0.239786	1.74054	0.353628
Octane	4.61292	6.97021E-07	0.24289	4.69548	0.373753

Copyright © 2002-2019 BRE Group, Ltd.
Licensed to Esso Exploration, Inc.

Process Streams Report
All Streams
Tabulated by Total Phase

Client Name:	XTO ENERGY INC	Job: DELAWARE DEVELOPMENT	
Location:	Husky CDP		
Flowsheet:	TANK BATTERY		

Mass Fraction	10 %	11 %	12 %	13 %	14 %
Ethylbenzene	0.118438	2.68474E-05	0.00495537	0.120582	0.00760744
m-Xylene	1.25149	0.000157842	0.0474723	1.27424	0.0729749
Nonane	4.6867	2.42313E-07	0.0738038	4.77386	0.118646
Decane	5.0076	2.29817E-08	0.0249594	5.10173	0.041507
Undecanes Plus	60.6995	6.95442E-09	2.00973E-05	61.8463	4.50329E-05

Mass Flow	10 lb/h	11 lb/h	12 lb/h	13 lb/h	14 lb/h
Water	6.23757	291699	4.59499	1.64258	0.899685
Hydrogen Sulfide	0	0	0	0	0
Nitrogen, Atomic	0.793766	0.00680604	0.769545	0.0242216	0.0224739
Carbon Dioxide	7.08178	9.82487	5.90761	1.17417	0.803328
Methane	191.544	76.5873	178.337	13.2073	11.2119
Ethane	1528.16	37.7388	1048.71	479.447	234.566
Propane	5982.77	14.9511	2184.91	3797.85	789.868
Isobutane	2314.54	1.29475	411.233	1903.31	175.854
Butane	7429.01	3.29482	950.77	6478.24	423.424
Isopentane	4255.52	0.468386	215.673	4039.85	103.216
Pentane	5536.21	0.163233	211.948	5324.26	103.224
Cyclopentane	0	0	0	0	0
i-C6	4509.99	0.0743377	70.6114	4439.38	35.7109
n-Hexane	3527.51	0.0189496	37.7952	3489.71	19.5151
Methylcyclopentane	2774.53	0.130866	28.9213	2745.61	14.7727
Benzene	2420.85	10.1772	23.4359	2397.42	12.009
Cyclohexane	6389.29	0.52055	48.0056	6341.28	24.7961
2,2,4-Trimethylpentane	0	0	0	0	0
i-C7	6210.22	0.024516	31.5019	6178.72	16.6236
Methylcyclohexane	9172.45	0.13847	30.781	9141.66	16.4081
n-Heptane	3081.85	0.00397743	10.5122	3071.34	5.63884
Toluene	5107.38	4.1768	13.2589	5094.13	7.10087
Octane	13755.9	0.00203432	13.4306	13742.5	7.50497
Ethylbenzene	353.186	0.0783565	0.274006	352.912	0.152758
m-Xylene	3732.01	0.460675	2.62497	3729.38	1.46534
Nonane	13976	0.000707213	4.08096	13971.9	2.38242
Decane	14932.9	6.70742E-05	1.38013	14931.5	0.833463
Undecanes Plus	181008	2.02971E-05	0.00111127	181008	0.000904262

Std Vapor Volumetric Flow	10 MMSCFD	11 MMSCFD	12 MMSCFD	13 MMSCFD	14 MMSCFD
Water	0.0031534	147.468	0.00232299	0.000830407	0.000454835
Hydrogen Sulfide	0	0	0	0	0
Nitrogen, Atomic	0.000516133	4.42551E-06	0.000500383	1.57497E-05	1.46132E-05
Carbon Dioxide	0.00146555	0.00203322	0.00122256	0.000242991	0.000166246
Methane	0.108743	0.0434801	0.101245	0.00749803	0.00636521
Ethane	0.462864	0.0114307	0.317644	0.14522	0.0710478
Propane	1.2357	0.00308803	0.451277	0.784418	0.163141
Isobutane	0.362683	0.000202884	0.0644393	0.298244	0.0275559
Butane	1.16411	0.000516291	0.148984	1.01513	0.0663495
Isopentane	0.537191	5.91262E-05	0.0272252	0.509966	0.0130294
Pentane	0.698857	2.06055E-05	0.026755	0.672102	0.0130304
Cyclopentane	0	0	0	0	0
i-C6	0.476647	7.85653E-06	0.00746271	0.469185	0.00377418
n-Hexane	0.372812	2.00272E-06	0.00399446	0.368817	0.0020625
Methylcyclopentane	0.300256	1.41621E-05	0.00312982	0.297126	0.00159868
Benzene	0.282265	0.00118663	0.00273255	0.279532	0.00140022
Cyclohexane	0.691439	5.63332E-05	0.0051951	0.686244	0.0026834
2,2,4-Trimethylpentane	0	0	0	0	0
i-C7	0.564463	2.22832E-06	0.00286329	0.5616	0.00151096
Methylcyclohexane	0.850824	1.28443E-05	0.00285521	0.847969	0.00152199
n-Heptane	0.280117	3.61519E-07	0.000955479	0.279162	0.000512529

Copyright © 2002-2019 BRE Group, Ltd.
Licensed to Esso Exploration, Inc.

Process Streams Report
All Streams
Tabulated by Total Phase

Client Name:	XTO ENERGY INC	Job: DELAWARE DEVELOPMENT
Location:	Husky CDP	
Flowsheet:	TANK BATTERY	

Std Vapor Volumetric Flow	10 MMSCFD	11 MMSCFD	12 MMSCFD	13 MMSCFD	14 MMSCFD
Toluene	0.50485	0.000412865	0.0013106	0.50354	0.000701901
Octane	1.09678	1.62199E-07	0.00107084	1.09571	0.000598383
Ethylbenzene	0.0302989	6.722E-06	2.35062E-05	0.0302754	1.31047E-05
m-Xylene	0.320159	3.95201E-05	0.000225189	0.319934	0.000125708
Nonane	0.992457	5.02204E-08	0.000289796	0.992167	0.00016918
Decane	0.95587	4.2935E-09	8.83434E-05	0.955782	5.33509E-05
Undecanes Plus	6.27037	7.03117E-10	3.8496E-08	6.27037	3.13248E-08

Stream Properties

Property	Units	10	11	12	13	14
Temperature	°F	68.9471	65	68.9471	68.9471	80 *
Pressure	psig	3 *	217	3	3	0.25
Molecular Weight	lb/lbmol	146.294	18.0175	42.9032	153.272	48.3965
Mass Flow	lb/h	298204	291859	5529.47	292675	2008
Std Vapor Volumetric Flow	MMSCFD	18.5649	147.531	1.17381	17.3911	0.377881
Std Liquid Volumetric Flow	sgpm	759.651	583.986	22.6588	736.993	7.69304
Net Ideal Gas Heating Value	Btu/ft^3	7201.72	0.503789	2246.46	7536.18	2520.22
Gross Ideal Gas Heating Value	Btu/ft^3	7697.06	50.8414	2441.89	8051.76	2734.92

Remarks

ProMax 5.0.19050.0
Copyright © 2002-2019 BRE Group, Ltd.
Licensed to Esso Exploration, Inc.

Process Streams Report
All Streams
Tabulated by Total Phase

Client Name:	XTO ENERGY INC	Job: DELAWARE DEVELOPMENT
Location:	Husky CDP	
Flowsheet:	TANK BATTERY	

Connections

	15	16	17	18	19
From Block	Well Mixture	PW Tanks	PW Tanks	Skim Tanks	Skim Tanks
To Block	VLVE-100	--	--	PW Tanks	--

Stream Composition

Mole Fraction	15 %	16 %	17 %	18 %	19 %
Water	74.2232		99.9958	99.9958	2.40819
Hydrogen Sulfide	0		0	0	0
Nitrogen, Atomic	0.277564		7.3029E-10	7.3029E-10	0.00765806
Carbon Dioxide	0.0307001		0.000762034	0.000762034	1.57409
Methane	12.0658		0.00162482	0.00162482	71.1104
Ethane	2.72692		0.000650416	0.000650416	18.1247
Propane	1.76439		0.000128396	0.000128396	5.0172
Isobutane	0.295453		6.38975E-06	6.38975E-06	0.334854
Butane	0.826403		1.9745E-05	1.9745E-05	0.843226
Isopentane	0.311048		1.70389E-06	1.70389E-06	0.0979897
Pentane	0.391008		2.21759E-07	2.21759E-07	0.0350992
Cyclopentane	0		0	0	0
i-C6	0.250756		1.21654E-07	1.21654E-07	0.013288
n-Hexane	0.19348		1.5238E-08	1.5238E-08	0.00342753
Methylcyclopentane	0.155614		8.70766E-07	8.70766E-07	0.0222899
Benzene	0.146567		0.000726641	0.000726641	0.199107
Cyclohexane	0.355564		7.3789E-06	7.3789E-06	0.0786697
2,2,4-Trimethylpentane	0		0	0	0
i-C7	0.288365		2.64739E-08	2.64739E-08	0.00378933
Methylcyclohexane	0.432405		8.07276E-07	8.07276E-07	0.020171
n-Heptane	0.142417		2.12686E-09	2.12686E-09	0.000620309
Toluene	0.256195		0.000244853	0.000244853	0.0896107
Octane	0.553581		3.9207E-10	3.9207E-10	0.000279743
Ethylbenzene	0.0152856		3.95098E-06	3.95098E-06	0.00154977
m-Xylene	0.161466		2.14384E-05	2.14384E-05	0.0136811
Nonane	0.499837		1.44245E-10	1.44245E-10	8.65561E-05
Decane	0.481097		3.49707E-12	3.49707E-12	7.42251E-06
Undecanes Plus	3.15487		1.57253E-10	1.57253E-10	8.15601E-07

Mass Fraction	15 %	16 %	17 %	18 %	19 %
Water	43.7321		99.9906	99.9906	2.0314
Hydrogen Sulfide	0		0	0	0
Nitrogen, Atomic	0.127151		5.67763E-10	5.67763E-10	0.00502246
Carbon Dioxide	0.0441881		0.00186148	0.00186148	3.24369
Methane	6.3306		0.00144681	0.00144681	53.4154
Ethane	2.68171		0.00108554	0.00108554	25.5184
Propane	2.54455		0.000314257	0.000314257	10.359
Isobutane	0.56163		2.0614E-05	2.0614E-05	0.911296
Butane	1.57092		6.36995E-05	6.36995E-05	2.29482
Isopentane	0.733966		6.8235E-06	6.8235E-06	0.331033
Pentane	0.922643		8.88071E-07	8.88071E-07	0.118574
Cyclopentane	0		0	0	0
i-C6	0.706731		5.81898E-07	5.81898E-07	0.0536173
n-Hexane	0.545305		7.28865E-08	7.28865E-08	0.0138302
Methylcyclopentane	0.428323		4.06763E-06	4.06763E-06	0.0878361
Benzene	0.374431		0.00315045	0.00315045	0.728225
Cyclohexane	0.97868		3.44692E-05	3.44692E-05	0.310008
2,2,4-Trimethylpentane	0		0	0	0
i-C7	0.945012		1.47241E-07	1.47241E-07	0.0177788
Methylcyclohexane	1.38854		4.39955E-06	4.39955E-06	0.0927341
n-Heptane	0.46672		1.18291E-08	1.18291E-08	0.00291036
Toluene	0.772024		0.00125223	0.00125223	0.386601
Octane	2.06812		2.48585E-09	2.48585E-09	0.00149622

Copyright © 2002-2019 BRE Group, Ltd.
Licensed to Esso Exploration, Inc.

Process Streams Report
All Streams
Tabulated by Total Phase

Client Name:	XTO ENERGY INC	Job: DELAWARE DEVELOPMENT	
Location:	Husky CDP		
Flowsheet:	TANK BATTERY		

Mass Fraction	15 %	16 %	17 %	18 %	19 %
Ethylbenzene	0.0530742		2.32821E-05	2.32821E-05	0.00770392
m-Xylene	0.560636		0.000126331	0.000126331	0.0680088
Nonane	2.09663		1.02686E-09	1.02686E-09	0.000519798
Decane	2.23873		2.76178E-11	2.76178E-11	4.94495E-05
Undecanes Plus	27.1276		2.2948E-09	2.2948E-09	1.00404E-05

Mass Flow	15 lb/h	16 lb/h	17 lb/h	18 lb/h	19 lb/h
Water	291802		291696	291696	2.75211
Hydrogen Sulfide	0		0	0	0
Nitrogen, Atomic	848.411		1.6563E-06	1.6563E-06	0.00680438
Carbon Dioxide	294.845		5.43036	5.43036	4.39451
Methane	42240.9		4.22069	4.22069	72.3666
Ethane	17893.7		3.16678	3.16678	34.572
Propane	16978.4		0.91676	0.91676	14.0343
Isobutane	3747.47		0.0601359	0.0601359	1.23461
Butane	10481.9		0.185826	0.185826	3.109
Isopentane	4897.38		0.0199057	0.0199057	0.44848
Pentane	6156.32		0.00259071	0.00259071	0.160642
Cyclopentane	0		0	0	0
i-C6	4715.66		0.00169753	0.00169753	0.0726402
n-Hexane	3638.54		0.000212627	0.000212627	0.0187369
Methylcyclopentane	2857.98		0.0118662	0.0118662	0.118999
Benzene	2498.38		9.19061	9.19061	0.986591
Cyclohexane	6530.23		0.100555	0.100555	0.419995
2,2,4-Trimethylpentane	0		0	0	0
i-C7	6305.58		0.000429537	0.000429537	0.0240865
Methylcyclohexane	9265.05		0.0128345	0.0128345	0.125635
n-Heptane	3114.18		3.45083E-05	3.45083E-05	0.00394292
Toluene	5151.32		3.65304	3.65304	0.523763
Octane	13799.5		7.25179E-06	7.25179E-06	0.00202706
Ethylbenzene	354.137		0.0679193	0.0679193	0.0104372
m-Xylene	3740.84		0.368538	0.368538	0.0921376
Nonane	13989.8		2.99559E-06	2.99559E-06	0.000704217
Decane	14937.9		8.05677E-08	8.05677E-08	6.69936E-05
Undecanes Plus	181008		6.69447E-06	6.69447E-06	1.36026E-05

Std Vapor Volumetric Flow	15 MMSCFD	16 MMSCFD	17 MMSCFD	18 MMSCFD	19 MMSCFD
Water	147.52		147.467	147.467	0.00139133
Hydrogen Sulfide	0		0	0	0
Nitrogen, Atomic	0.551665		1.07698E-09	1.07698E-09	4.42443E-06
Carbon Dioxide	0.0610171		0.00112379	0.00112379	0.000909429
Methane	23.981		0.00239617	0.00239617	0.0410839
Ethane	5.41982		0.000959187	0.000959187	0.0104715
Propane	3.50677		0.00018935	0.00018935	0.00289868
Isobutane	0.58722		9.42316E-06	9.42316E-06	0.000193461
Butane	1.64249		2.91186E-05	2.91186E-05	0.000487173
Isopentane	0.618215		2.51278E-06	2.51278E-06	5.66134E-05
Pentane	0.777136		3.27035E-07	3.27035E-07	2.02785E-05
Cyclopentane	0		0	0	0
i-C6	0.498384		1.79407E-07	1.79407E-07	7.67712E-06
n-Hexane	0.384546		2.24719E-08	2.24719E-08	1.98025E-06
Methylcyclopentane	0.309287		1.28414E-06	1.28414E-06	1.28779E-05
Benzene	0.291304		0.0010716	0.0010716	0.000115034
Cyclohexane	0.706692		1.08819E-05	1.08819E-05	4.54513E-05
2,2,4-Trimethylpentane	0		0	0	0
i-C7	0.573131		3.90418E-08	3.90418E-08	2.18928E-06
Methylcyclohexane	0.859414		1.19051E-06	1.19051E-06	1.16538E-05
n-Heptane	0.283056		3.13655E-09	3.13655E-09	3.58382E-07

Copyright © 2002-2019 BRE Group, Ltd.
Licensed to Esso Exploration, Inc.

Process Streams Report
All Streams
Tabulated by Total Phase

Client Name:	XTO ENERGY INC	Job: DELAWARE DEVELOPMENT
Location:	Husky CDP	
Flowsheet:	TANK BATTERY	

Std Vapor Volumetric Flow	15 MMSCFD	16 MMSCFD	17 MMSCFD	18 MMSCFD	19 MMSCFD
Toluene	0.509193		0.000361092	0.000361092	5.17724E-05
Octane	1.10026		5.78197E-10	5.78197E-10	1.61621E-07
Ethylbenzene	0.0303805		5.82662E-06	5.82662E-06	8.95378E-07
m-Xylene	0.320916		3.16159E-05	3.16159E-05	7.90424E-06
Nonane	0.993437		2.12722E-10	2.12722E-10	5.00077E-08
Decane	0.956191		5.15723E-12	5.15723E-12	4.28834E-09
Undecanes Plus	6.27037		2.31905E-10	2.31905E-10	4.71212E-10

Stream Properties

Property	Units	15	16	17	18	19
Temperature	°F	98.2197		65.5148	65.5148	65.5148
Pressure	psig	250	0.25	0.25 *	0.25 *	0.25
Molecular Weight	lb/lbmol	30.576		18.0162	18.0162	21.3569
Mass Flow	lb/h	667249	0	291723	291723	135.479
Std Vapor Volumetric Flow	MMSCFD	198.752	0	147.473	147.473	0.0577748
Std Liquid Volumetric Flow	sgpm	1783.45	0	583.215	583.215	0.770722
Net Ideal Gas Heating Value	Btu/ft^3	866.022		0.0673322	0.0673322	1114.58
Gross Ideal Gas Heating Value	Btu/ft^3	969.061		50.3798	50.3798	1229.07

Remarks

ProMax 5.0.19050.0
Copyright © 2002-2019 BRE Group, Ltd.
Licensed to Esso Exploration, Inc.

Process Streams Report
All Streams
Tabulated by Total Phase

Client Name:	XTO ENERGY INC	Job: DELAWARE DEVELOPMENT
Location:	Husky CDP	
Flowsheet:	TANK BATTERY	

Connections

	20	21			
From Block	VLVE-102	Oil Tanks			
To Block	Skim Tanks	Third Party Oil			

Stream Composition

Mole Fraction	20 %	21 %			
Water	99.9576	0.00220753			
Hydrogen Sulfide	0	0			
Nitrogen, Atomic	2.99972E-06	6.67962E-06			
Carbon Dioxide	0.00137817	0.000451089			
Methane	0.0294719	0.00665848			
Ethane	0.00774803	0.435967			
Propane	0.00209315	3.65174			
Isobutane	0.00013752	1.59105			
Butane	0.000349955	5.57671			
Isopentane	4.00772E-05	2.92089			
Pentane	1.39669E-05	3.87389			
Cyclopentane	0	0			
i-C6	5.32535E-06	2.73559			
n-Hexane	1.3575E-06	2.15571			
Methylcyclopentane	9.59942E-06	1.73705			
Benzene	0.000804329	1.6348			
Cyclohexane	3.8184E-05	4.01783			
2,2,4-Trimethylpentane	0	0			
i-C7	1.51041E-06	3.29208			
Methylcyclohexane	8.70617E-06	4.97524			
n-Heptane	2.45047E-07	1.63784			
Toluene	0.00027985	2.95557			
Octane	1.09943E-07	6.43683			
Ethylbenzene	4.55634E-06	0.177876			
m-Xylene	2.67877E-05	1.87977			
Nonane	3.40406E-08	5.83076			
Decane	2.91024E-09	5.61757			
Undecanes Plus	4.76591E-10	36.8559			

Mass Fraction	20 %	21 %			
Water	99.9451	0.000255584			
Hydrogen Sulfide	0	0			
Nitrogen, Atomic	2.33196E-06	6.01275E-07			
Carbon Dioxide	0.00336631	0.000127583			
Methane	0.0262412	0.000686486			
Ethane	0.0129305	0.0842478			
Propane	0.00512271	1.03486			
Isobutane	0.000443622	0.594307			
Butane	0.00112891	2.08308			
Isopentane	0.000160484	1.35435			
Pentane	5.59288E-05	1.79623			
Cyclopentane	0	0			
i-C6	2.54704E-05	1.51502			
n-Hexane	6.49272E-06	1.19387			
Methylcyclopentane	4.48387E-05	0.939507			
Benzene	0.00348703	0.820668			
Cyclohexane	0.000178357	2.1731			
2,2,4-Trimethylpentane	0	0			
i-C7	8.39995E-06	2.11998			
Methylcyclohexane	4.74441E-05	3.13942			
n-Heptane	1.36279E-06	1.05471			
Toluene	0.0014311	1.75012			
Octane	6.97021E-07	4.72533			

Copyright © 2002-2019 BRE Group, Ltd.
Licensed to Esso Exploration, Inc.

Process Streams Report
All Streams
Tabulated by Total Phase

Client Name:	XTO ENERGY INC	Job: DELAWARE DEVELOPMENT	
Location:	Husky CDP		
Flowsheet:	TANK BATTERY		

Mass Fraction	20 %	21 %			
Ethylbenzene	2.68474E-05	0.121362			
m-Xylene	0.000157842	1.28254			
Nonane	2.42313E-07	4.80601			
Decane	2.29817E-08	5.13669			
Undecanes Plus	6.95442E-09	62.2735			

Mass Flow	20 lb/h	21 lb/h			
Water	291699	0.742897			
Hydrogen Sulfide	0	0			
Nitrogen, Atomic	0.00680604	0.00174771			
Carbon Dioxide	9.82487	0.370843			
Methane	76.5873	1.99539			
Ethane	37.7388	244.88			
Propane	14.9511	3007.99			
Isobutane	1.29475	1727.45			
Butane	3.29482	6054.82			
Isopentane	0.468386	3936.64			
Pentane	0.163233	5221.04			
Cyclopentane	0	0			
i-C6	0.0743377	4403.67			
n-Hexane	0.0189496	3470.2			
Methylcyclopentane	0.130866	2730.84			
Benzene	10.1772	2385.41			
Cyclohexane	0.52055	6316.48			
2,2,4-Trimethylpentane	0	0			
i-C7	0.024516	6162.09			
Methylcyclohexane	0.13847	9125.26			
n-Heptane	0.00397743	3065.7			
Toluene	4.1768	5087.02			
Octane	0.00203432	13735			
Ethylbenzene	0.0783565	352.76			
m-Xylene	0.460675	3727.92			
Nonane	0.000707213	13969.5			
Decane	6.70742E-05	14930.7			
Undecanes Plus	2.02971E-05	181008			

Std Vapor Volumetric Flow	20 MMSCFD	21 MMSCFD			
Water	147.468	0.000375571			
Hydrogen Sulfide	0	0			
Nitrogen, Atomic	4.42551E-06	1.13642E-06			
Carbon Dioxide	0.00203322	7.67446E-05			
Methane	0.0434801	0.00113282			
Ethane	0.0114307	0.0741719			
Propane	0.00308803	0.621277			
Isobutane	0.000202884	0.270688			
Butane	0.000516291	0.948776			
Isopentane	5.91262E-05	0.496936			
Pentane	2.06055E-05	0.659072			
Cyclopentane	0	0			
i-C6	7.85653E-06	0.465411			
n-Hexane	2.00272E-06	0.366755			
Methylcyclopentane	1.41621E-05	0.295527			
Benzene	0.00118663	0.278132			
Cyclohexane	5.63332E-05	0.683561			
2,2,4-Trimethylpentane	0	0			
i-C7	2.22832E-06	0.560089			
Methylcyclohexane	1.28443E-05	0.846447			
n-Heptane	3.61519E-07	0.278649			

Copyright © 2002-2019 BRE Group, Ltd.
Licensed to Esso Exploration, Inc.

Process Streams Report
All Streams
Tabulated by Total Phase

Client Name:	XTO ENERGY INC	Job: DELAWARE DEVELOPMENT
Location:	Husky CDP	
Flowsheet:	TANK BATTERY	

Std Vapor Volumetric Flow	20 MMSCFD	21 MMSCFD			
Toluene	0.000412865	0.502838			
Octane	1.62199E-07	1.09511			
Ethylbenzene	6.722E-06	0.0302623			
m-Xylene	3.95201E-05	0.319808			
Nonane	5.02204E-08	0.991998			
Decane	4.2935E-09	0.955728			
Undecanes Plus	7.03117E-10	6.27037			

Stream Properties

Property	Units	20	21			
Temperature	°F	65.5148	80			
Pressure	psig	0.25 *	0.25 *			
Molecular Weight	lb/lbmol	18.0175	155.602			
Mass Flow	lb/h	291859	290667			
Std Vapor Volumetric Flow	MMSCFD	147.531	17.0132			
Std Liquid Volumetric Flow	sgpm	583.986	729.3			
Net Ideal Gas Heating Value	Btu/ft^3	0.503789	7647.59			
Gross Ideal Gas Heating Value	Btu/ft^3	50.8414	8169.85			

Remarks

ProMax 5.0.19050.0
Copyright © 2002-2019 BRE Group, Ltd.
Licensed to Esso Exploration, Inc.

Environments Report

Client Name:	XTO ENERGY INC	Job: DELAWARE DEVELOPMENT
Location:	Husky CDP	

Project-Wide Constants

Atmospheric Pressure	12.73 psia	Ideal Gas Reference Pressure	14.6959 psia
Ideal Gas Reference Temperature	60 °F	Ideal Gas Reference Volume	379.484 ft^3/lbmol
Liquid Reference Temperature	60 °F		

Environment [BEU DI4 Sample]

Environment Settings

Number of Poynting Intervals	0	Phase Tolerance	1 %
Gibbs Excess Model Evaluation Temperature	77 °F	Emulsion Enabled	False
Freeze Out Temperature Threshold Difference	10 °F		

Components

Component Name	Henry's Law Component	Phase Initiator	Component Name	Henry's Law Component	Phase Initiator
Carbon Dioxide	False	False	i-C7	False	False
Nitrogen	False	False	Methylcyclohexane	False	False
Methane	False	False	Octane	False	False
Ethane	False	False	Nonane	False	False
Propane	False	False	Benzene	False	False
Isobutane	False	False	Toluene	False	False
Butane	False	False	Ethylbenzene	False	False
Isopentane	False	False	o-Xylene	False	False
Pentane	False	False	Hydrogen Sulfide	False	False
n-Hexane	False	False	Water	False	True
Cyclohexane	False	False	Undecanes Plus	False	False
i-C6	False	False			

Physical Property Method Sets

Liquid Molar Volume	COSTALD	Overall Package	Peng-Robinson
Stability Calculation	Peng-Robinson	Vapor Package	Peng-Robinson
Light Liquid Package	Peng-Robinson	Heavy Liquid Package	Peng-Robinson

Remarks

Environment [CDP - STAB Sample]

Environment Settings

Number of Poynting Intervals	0	Phase Tolerance	1 %
Gibbs Excess Model Evaluation Temperature	77 °F	Emulsion Enabled	False
Freeze Out Temperature Threshold Difference	10 °F		

Components

Component Name	Henry's Law Component	Phase Initiator	Component Name	Henry's Law Component	Phase Initiator
Water	False	True	Methylcyclopentane	False	False
Hydrogen Sulfide	False	False	Benzene	False	False
Nitrogen, Atomic	False	False	Cyclohexane	False	False
Carbon Dioxide	False	False	2,2,4-Trimethylpentane	False	False
Methane	False	False	i-C7	False	False
Ethane	False	False	Methylcyclohexane	False	False
Propane	False	False	n-Heptane	False	False
Isobutane	False	False	Toluene	False	False
Butane	False	False	Octane	False	False
Isopentane	False	False	Ethylbenzene	False	False

Copyright © 2002-2019 BRE Group, Ltd.
Licensed to Esso Exploration, Inc.

Environments Report

Client Name:	XTO ENERGY INC	Job: DELAWARE DEVELOPMENT
Location:	Husky CDP	

Components

Component Name	Henry's Law Component	Phase Initiator	Component Name	Henry's Law Component	Phase Initiator
Pentane	False	False	m-Xylene	False	False
Cyclopentane	False	False	Nonane	False	False
i-C6	False	False	Decane	False	False
n-Hexane	False	False	Undecanes Plus	False	False

Physical Property Method Sets

Liquid Molar Volume	COSTALD	Overall Package	Peng-Robinson
Stability Calculation	Peng-Robinson	Vapor Package	Peng-Robinson
Light Liquid Package	Peng-Robinson	Heavy Liquid Package	Peng-Robinson

Remarks

ProMax 5.0.19050.0
Copyright © 2002-2019 BRE Group, Ltd.
Licensed to Esso Exploration, Inc.

User Value Sets Report

Client Name:	XTO ENERGY INC	Job: DELAWARE DEVELOPMENT
Location:	Husky CDP	

100k bbl IFR

User Value [BlockReady]

* Parameter	1		Upper Bound	
Lower Bound			* Enforce Bounds	False

User Value [ShellLength]

* Parameter	50	ft	Upper Bound	ft
Lower Bound		ft	* Enforce Bounds	False

User Value [ShellDiam]

* Parameter	130.5	ft	Upper Bound	ft
Lower Bound		ft	* Enforce Bounds	False

User Value [BreatherVP]

* Parameter	-1.09	psig	Upper Bound	psig
Lower Bound		psig	* Enforce Bounds	False

User Value [BreatherVacP]

* Parameter	-1.15	psig	Upper Bound	psig
Lower Bound		psig	* Enforce Bounds	False

User Value [DomeRadius]

Parameter		ft	Upper Bound	ft
Lower Bound		ft	* Enforce Bounds	False

User Value [OpPress]

* Parameter	-1.12	psig	Upper Bound	psig
Lower Bound		psig	* Enforce Bounds	False

User Value [AvgPercentLiq]

* Parameter	50	%	Upper Bound	%
Lower Bound		%	* Enforce Bounds	False

User Value [MaxPercentLiq]

* Parameter	90	%	Upper Bound	%
Lower Bound		%	* Enforce Bounds	False

User Value [AnnNetTP]

* Parameter	201022	bbl/day	Upper Bound	bbl/day
Lower Bound		bbl/day	* Enforce Bounds	False

User Value [OREff]

* Parameter	50	%	Upper Bound	%
Lower Bound		%	* Enforce Bounds	False

User Value [MaxAvgT]

* Parameter	75.7333	°F	Upper Bound	°F
Lower Bound		°F	* Enforce Bounds	False

User Value [MinAvgT]

* Parameter	45.9	°F	Upper Bound	°F
Lower Bound		°F	* Enforce Bounds	False

User Value [BulkLiqT]

* Parameter	90	°F	Upper Bound	°F
Lower Bound		°F	* Enforce Bounds	False

Copyright © 2002-2019 BRE Group, Ltd.
Licensed to Esso Exploration, Inc.

User Value Sets Report

Client Name:	XTO ENERGY INC	Job: DELAWARE DEVELOPMENT
Location:	Husky CDP	

User Value [AvgP]

* Parameter	12.731	psia	Upper Bound	psia
Lower Bound		psia	* Enforce Bounds	False

User Value [Therml]

* Parameter	1810	Btu/ft^2/day	Upper Bound	Btu/ft^2/day
Lower Bound		Btu/ft^2/day	* Enforce Bounds	False

User Value [AvgWindSpeed]

* Parameter	8.68333	mi/h	Upper Bound	mi/h
Lower Bound		mi/h	* Enforce Bounds	False

User Value [MaxHourlyLoadingRate]

* Parameter	210	bbl/hr	Upper Bound	bbl/hr
Lower Bound		bbl/hr	* Enforce Bounds	False

User Value [FlashingT]

* Parameter	87.1141	°F	Upper Bound	°F
Lower Bound		°F	* Enforce Bounds	False

User Value [EntrainedOilFrac]

* Parameter	1	%	Upper Bound	%
Lower Bound		%	* Enforce Bounds	False

User Value [TurnoverRate]

Parameter			Upper Bound	
Lower Bound			* Enforce Bounds	False

User Value [LLossSatFactor]

Parameter			Upper Bound	
Lower Bound			* Enforce Bounds	False

User Value [AtmPressure]

* Parameter	12.731	psia	Upper Bound	psia
Lower Bound		psia	* Enforce Bounds	False

User Value [TVP]

* Parameter	6.7504	psia	Upper Bound	psia
Lower Bound		psia	* Enforce Bounds	False

User Value [MaxVP]

* Parameter	7.61739	psia	Upper Bound	psia
Lower Bound		psia	* Enforce Bounds	False

User Value [MinVP]

* Parameter	5.96533	psia	Upper Bound	psia
Lower Bound		psia	* Enforce Bounds	False

User Value [AvgLiqSurfaceT]

* Parameter	79.5902	°F	Upper Bound	°F
Lower Bound		°F	* Enforce Bounds	False

User Value [MaxLiqSurfaceT]

* Parameter	87.1141	°F	Upper Bound	°F

ProMax 5.0.19050.0
Copyright © 2002-2019 BRE Group, Ltd.
Licensed to Esso Exploration, Inc.

User Value Sets Report

Client Name:	XTO ENERGY INC	Job: DELAWARE DEVELOPMENT
Location:	Husky CDP	

User Value [MaxLiqSurfaceT]

Lower Bound	°F	* Enforce Bounds	False

User Value [TotalLosses]

* Parameter	5.0905 ton/yr	Upper Bound	ton/yr
Lower Bound	ton/yr	* Enforce Bounds	False

User Value [WorkingLosses]

* Parameter	0 ton/yr	Upper Bound	ton/yr
Lower Bound	ton/yr	* Enforce Bounds	False

User Value [StandingLosses]

* Parameter	0 ton/yr	Upper Bound	ton/yr
Lower Bound	ton/yr	* Enforce Bounds	False

User Value [RimSealLosses]

* Parameter	0.23112 ton/yr	Upper Bound	ton/yr
Lower Bound	ton/yr	* Enforce Bounds	False

User Value [WithdrawalLoss]

* Parameter	2.81383 ton/yr	Upper Bound	ton/yr
Lower Bound	ton/yr	* Enforce Bounds	False

User Value [LoadingLosses]

* Parameter	0 ton/yr	Upper Bound	ton/yr
Lower Bound	ton/yr	* Enforce Bounds	False

User Value [MaxHourlyLoadingLoss]

* Parameter	0 lb/hr	Upper Bound	lb/hr
Lower Bound	lb/hr	* Enforce Bounds	False

User Value [PStar]

* Parameter	0.121885	Upper Bound	
Lower Bound		* Enforce Bounds	False

User Value [AllCTotalLosses]

* Parameter	5.35342 ton/yr	Upper Bound	ton/yr
Lower Bound	ton/yr	* Enforce Bounds	False

User Value [AllCLoadingLosses]

* Parameter	0 ton/yr	Upper Bound	ton/yr
Lower Bound	ton/yr	* Enforce Bounds	False

User Value [AllCMaxHLoadingLoss]

* Parameter	0 lb/hr	Upper Bound	lb/hr
Lower Bound	lb/hr	* Enforce Bounds	False

User Value [AllCFlashingLosses]

* Parameter	0 ton/yr	Upper Bound	ton/yr
Lower Bound	ton/yr	* Enforce Bounds	False

User Value [DeckFittingLosses]

* Parameter	2.04554 ton/yr	Upper Bound	ton/yr
Lower Bound	ton/yr	* Enforce Bounds	False

Copyright © 2002-2019 BRE Group, Ltd.
Licensed to Esso Exploration, Inc.

User Value Sets Report

Client Name:	XTO ENERGY INC	Job: DELAWARE DEVELOPMENT
Location:	Husky CDP	

User Value [DeckSeamLosses]

* Parameter	0	ton/yr	Upper Bound	ton/yr
Lower Bound		ton/yr	* Enforce Bounds	False

User Value [FlashingLosses]

* Parameter	0	ton/yr	Upper Bound	ton/yr
Lower Bound		ton/yr	* Enforce Bounds	False

User Value [TotalResidual]

* Parameter	1.01649E+07	ton/yr	Upper Bound	ton/yr
Lower Bound		ton/yr	* Enforce Bounds	False

User Value [GasMoleWeight]

* Parameter	0.0540043	kg/mol	Upper Bound	kg/mol
Lower Bound		kg/mol	* Enforce Bounds	False

User Value [VapReportableFrac]

* Parameter	89.6863	%	Upper Bound	%
Lower Bound		%	* Enforce Bounds	False

User Value [LiqReportableFrac]

* Parameter	99.9605	%	Upper Bound	%
Lower Bound		%	* Enforce Bounds	False

User Value [FlashReportableFrac]

* Parameter	0	%	Upper Bound	%
Lower Bound		%	* Enforce Bounds	False

Remarks
This User Value Set was programmatically generated. GUID={F82CE5A8-EB9D-490F-867D-C9817F40DFBE}

Oil TK

User Value [BlockReady]

* Parameter	1		Upper Bound	
Lower Bound			* Enforce Bounds	False

User Value [ShellLength]

* Parameter	24	ft	Upper Bound	ft
Lower Bound		ft	* Enforce Bounds	False

User Value [ShellDiam]

* Parameter	25	ft	Upper Bound	ft
Lower Bound		ft	* Enforce Bounds	False

User Value [BreatherVP]

* Parameter	0.03	psig	Upper Bound	psig
Lower Bound		psig	* Enforce Bounds	False

User Value [BreatherVacP]

* Parameter	-0.03	psig	Upper Bound	psig
Lower Bound		psig	* Enforce Bounds	False

ProMax 5.0.19050.0
Copyright © 2002-2019 BRE Group, Ltd.
Licensed to Esso Exploration, Inc.

User Value Sets Report

Client Name:	XTO ENERGY INC	Job: DELAWARE DEVELOPMENT
Location:	Husky CDP	

User Value [DomeRadius]

Parameter		ft	Upper Bound	ft
Lower Bound		ft	* Enforce Bounds	False

User Value [OpPress]

* Parameter	0	psig	Upper Bound	psig
Lower Bound		psig	* Enforce Bounds	False

User Value [AvgPercentLiq]

* Parameter	50	%	Upper Bound	%
Lower Bound		%	* Enforce Bounds	False

User Value [MaxPercentLiq]

* Parameter	90	%	Upper Bound	%
Lower Bound		%	* Enforce Bounds	False

User Value [AnnNetTP]

* Parameter	24952.5	bbl/day	Upper Bound	bbl/day
Lower Bound		bbl/day	* Enforce Bounds	False

User Value [OREff]

Parameter		%	Upper Bound	%
Lower Bound		%	* Enforce Bounds	False

User Value [MaxAvgT]

* Parameter	75.7333	°F	Upper Bound	°F
Lower Bound		°F	* Enforce Bounds	False

User Value [MinAvgT]

* Parameter	45.9	°F	Upper Bound	°F
Lower Bound		°F	* Enforce Bounds	False

User Value [BulkLiqT]

* Parameter	80	°F	Upper Bound	°F
Lower Bound		°F	* Enforce Bounds	False

User Value [AvgP]

* Parameter	12.731	psia	Upper Bound	psia
Lower Bound		psia	* Enforce Bounds	False

User Value [Therml]

* Parameter	1810	Btu/ft^2/day	Upper Bound	Btu/ft^2/day
Lower Bound		Btu/ft^2/day	* Enforce Bounds	False

User Value [AvgWindSpeed]

* Parameter	8.68333	mi/h	Upper Bound	mi/h
Lower Bound		mi/h	* Enforce Bounds	False

User Value [MaxHourlyLoadingRate]

Parameter		bbl/hr	Upper Bound	bbl/hr
Lower Bound		bbl/hr	* Enforce Bounds	False

User Value [FlashingT]

* Parameter	88.526	°F	Upper Bound	°F
Lower Bound		°F	* Enforce Bounds	False

Copyright © 2002-2019 BRE Group, Ltd.
Licensed to Esso Exploration, Inc.

User Value Sets Report

Client Name:	XTO ENERGY INC	Job: DELAWARE DEVELOPMENT
Location:	Husky CDP	

User Value [EntrainedOilFrac]

* Parameter	1	%	Upper Bound	%
Lower Bound		%	* Enforce Bounds	False

User Value [TurnoverRate]

* Parameter	803.718		Upper Bound	
Lower Bound			* Enforce Bounds	False

User Value [LLossSatFactor]

Parameter			Upper Bound	
Lower Bound			* Enforce Bounds	False

User Value [AtmPressure]

* Parameter	12.731	psia	Upper Bound	psia
Lower Bound		psia	* Enforce Bounds	False

User Value [TVP]

* Parameter	10.3673	psia	Upper Bound	psia
Lower Bound		psia	* Enforce Bounds	False

User Value [MaxVP]

* Parameter	12.2017	psia	Upper Bound	psia
Lower Bound		psia	* Enforce Bounds	False

User Value [MinVP]

* Parameter	8.7588	psia	Upper Bound	psia
Lower Bound		psia	* Enforce Bounds	False

User Value [AvgLiqSurfaceT]

* Parameter	77.7079	°F	Upper Bound	°F
Lower Bound		°F	* Enforce Bounds	False

User Value [MaxLiqSurfaceT]

* Parameter	88.526	°F	Upper Bound	°F
Lower Bound		°F	* Enforce Bounds	False

User Value [TotalLosses]

* Parameter	525.738	ton/yr	Upper Bound	ton/yr
Lower Bound		ton/yr	* Enforce Bounds	False

User Value [WorkingLosses]

* Parameter	70.6429	ton/yr	Upper Bound	ton/yr
Lower Bound		ton/yr	* Enforce Bounds	False

User Value [StandingLosses]

* Parameter	16.9801	ton/yr	Upper Bound	ton/yr
Lower Bound		ton/yr	* Enforce Bounds	False

User Value [RimSealLosses]

* Parameter	0	ton/yr	Upper Bound	ton/yr
Lower Bound		ton/yr	* Enforce Bounds	False

User Value [WithdrawalLoss]

* Parameter	0	ton/yr	Upper Bound	ton/yr

Copyright © 2002-2019 BRE Group, Ltd.
Licensed to Esso Exploration, Inc.

User Value Sets Report

Client Name:	XTO ENERGY INC	Job: DELAWARE DEVELOPMENT
Location:	Husky CDP	

User Value [WithdrawalLoss]

Lower Bound	ton/yr	* Enforce Bounds	False

User Value [LoadingLosses]

* Parameter	0 ton/yr	Upper Bound	ton/yr
Lower Bound	ton/yr	* Enforce Bounds	False

User Value [MaxHourlyLoadingLoss]

* Parameter	0 lb/hr	Upper Bound	lb/hr
Lower Bound	lb/hr	* Enforce Bounds	False

User Value [PStar]

Parameter		Upper Bound	
Lower Bound		* Enforce Bounds	False

User Value [AllCTotalLosses]

* Parameter	589.731 ton/yr	Upper Bound	ton/yr
Lower Bound	ton/yr	* Enforce Bounds	False

User Value [AllCLoadingLosses]

* Parameter	0 ton/yr	Upper Bound	ton/yr
Lower Bound	ton/yr	* Enforce Bounds	False

User Value [AllCMaxHLoadingLoss]

* Parameter	0 lb/hr	Upper Bound	lb/hr
Lower Bound	lb/hr	* Enforce Bounds	False

User Value [AllCFlashingLosses]

* Parameter	4078.42 ton/yr	Upper Bound	ton/yr
Lower Bound	ton/yr	* Enforce Bounds	False

User Value [DeckFittingLosses]

* Parameter	0 ton/yr	Upper Bound	ton/yr
Lower Bound	ton/yr	* Enforce Bounds	False

User Value [DeckSeamLosses]

* Parameter	0 ton/yr	Upper Bound	ton/yr
Lower Bound	ton/yr	* Enforce Bounds	False

User Value [FlashingLosses]

* Parameter	3728.41 ton/yr	Upper Bound	ton/yr
Lower Bound	ton/yr	* Enforce Bounds	False

User Value [TotalResidual]

* Parameter	1.26845E+06 ton/yr	Upper Bound	ton/yr
Lower Bound	ton/yr	* Enforce Bounds	False

User Value [GasMoleWeight]

* Parameter	0.0493681 kg/mol	Upper Bound	kg/mol
Lower Bound	kg/mol	* Enforce Bounds	False

User Value [VapReportableFrac]

* Parameter	89.1487 %	Upper Bound	%
Lower Bound	%	* Enforce Bounds	False

Copyright © 2002-2019 BRE Group, Ltd.
Licensed to Esso Exploration, Inc.

User Value Sets Report

Client Name:	XTO ENERGY INC	Job: DELAWARE DEVELOPMENT
Location:	Husky CDP	

User Value [LiqReportableFrac]

* Parameter	99.942	%	Upper Bound	%
Lower Bound		%	* Enforce Bounds	False

User Value [FlashReportableFrac]

* Parameter	91.418	%	Upper Bound	%
Lower Bound		%	* Enforce Bounds	False

Remarks
This User Value Set was programmatically generated. GUID={BD484767-6D5E-4291-AC40-63B1179AAE3C}

PW TK

User Value [BlockReady]

* Parameter	1		Upper Bound	
Lower Bound			* Enforce Bounds	False

User Value [ShellLength]

* Parameter	24	ft	Upper Bound	ft
Lower Bound		ft	* Enforce Bounds	False

User Value [ShellDiam]

* Parameter	15.5	ft	Upper Bound	ft
Lower Bound		ft	* Enforce Bounds	False

User Value [BreatherVP]

* Parameter	0.03	psig	Upper Bound	psig
Lower Bound		psig	* Enforce Bounds	False

User Value [BreatherVacP]

* Parameter	-0.03	psig	Upper Bound	psig
Lower Bound		psig	* Enforce Bounds	False

User Value [DomeRadius]

Parameter		ft	Upper Bound	ft
Lower Bound		ft	* Enforce Bounds	False

User Value [OpPress]

* Parameter	0	psig	Upper Bound	psig
Lower Bound		psig	* Enforce Bounds	False

User Value [AvgPercentLiq]

* Parameter	50	%	Upper Bound	%
Lower Bound		%	* Enforce Bounds	False

User Value [MaxPercentLiq]

* Parameter	90	%	Upper Bound	%
Lower Bound		%	* Enforce Bounds	False

User Value [AnnNetTP]

* Parameter	10063.6	bbl/day	Upper Bound	bbl/day
Lower Bound		bbl/day	* Enforce Bounds	False

ProMax 5.0.19050.0
Copyright © 2002-2019 BRE Group, Ltd.
Licensed to Esso Exploration, Inc.

User Value Sets Report

Client Name:	XTO ENERGY INC	Job: DELAWARE DEVELOPMENT
Location:	Husky CDP	

User Value [OREff]

Parameter		%	Upper Bound	%
Lower Bound		%	* Enforce Bounds	False

User Value [MaxAvgT]

* Parameter	75.7333	°F	Upper Bound	°F
Lower Bound		°F	* Enforce Bounds	False

User Value [MinAvgT]

* Parameter	45.9	°F	Upper Bound	°F
Lower Bound		°F	* Enforce Bounds	False

User Value [BulkLiqT]

* Parameter	90	°F	Upper Bound	°F
Lower Bound		°F	* Enforce Bounds	False

User Value [AvgP]

* Parameter	12.731	psia	Upper Bound	psia
Lower Bound		psia	* Enforce Bounds	False

User Value [Therml]

* Parameter	1810	Btu/ft^2/day	Upper Bound	Btu/ft^2/day
Lower Bound		Btu/ft^2/day	* Enforce Bounds	False

User Value [AvgWindSpeed]

* Parameter	8.68333	mi/h	Upper Bound	mi/h
Lower Bound		mi/h	* Enforce Bounds	False

User Value [MaxHourlyLoadingRate]

Parameter		bbl/hr	Upper Bound	bbl/hr
Lower Bound		bbl/hr	* Enforce Bounds	False

User Value [FlashingT]

* Parameter	94.126	°F	Upper Bound	°F
Lower Bound		°F	* Enforce Bounds	False

User Value [EntrainedOilFrac]

* Parameter	1	%	Upper Bound	%
Lower Bound		%	* Enforce Bounds	False

User Value [TurnoverRate]

* Parameter	2529.77		Upper Bound	
Lower Bound			* Enforce Bounds	False

User Value [LLossSatFactor]

Parameter			Upper Bound	
Lower Bound			* Enforce Bounds	False

User Value [AtmPressure]

* Parameter	12.731	psia	Upper Bound	psia
Lower Bound		psia	* Enforce Bounds	False

User Value [TVP]

* Parameter	0.569673	psia	Upper Bound	psia
Lower Bound		psia	* Enforce Bounds	False

ProMax 5.0.19050.0
Copyright © 2002-2019 BRE Group, Ltd.
Licensed to Esso Exploration, Inc.

User Value Sets Report

Client Name:	XTO ENERGY INC	Job: DELAWARE DEVELOPMENT
Location:	Husky CDP	

User Value [MaxVP]

* Parameter	0.799945	psia	Upper Bound	psia
Lower Bound		psia	* Enforce Bounds	False

User Value [MinVP]

* Parameter	0.399393	psia	Upper Bound	psia
Lower Bound		psia	* Enforce Bounds	False

User Value [AvgLiqSurfaceT]

* Parameter	83.3079	°F	Upper Bound	°F
Lower Bound		°F	* Enforce Bounds	False

User Value [MaxLiqSurfaceT]

* Parameter	94.126	°F	Upper Bound	°F
Lower Bound		°F	* Enforce Bounds	False

User Value [TotalLosses]

* Parameter	0.0206759	ton/yr	Upper Bound	ton/yr
Lower Bound		ton/yr	* Enforce Bounds	False

User Value [WorkingLosses]

* Parameter	0.00999284	ton/yr	Upper Bound	ton/yr
Lower Bound		ton/yr	* Enforce Bounds	False

User Value [StandingLosses]

* Parameter	0.000345094	ton/yr	Upper Bound	ton/yr
Lower Bound		ton/yr	* Enforce Bounds	False

User Value [RimSealLosses]

* Parameter	0	ton/yr	Upper Bound	ton/yr
Lower Bound		ton/yr	* Enforce Bounds	False

User Value [WithdrawalLoss]

* Parameter	0	ton/yr	Upper Bound	ton/yr
Lower Bound		ton/yr	* Enforce Bounds	False

User Value [LoadingLosses]

* Parameter	0	ton/yr	Upper Bound	ton/yr
Lower Bound		ton/yr	* Enforce Bounds	False

User Value [MaxHourlyLoadingLoss]

* Parameter	0	lb/hr	Upper Bound	lb/hr
Lower Bound		lb/hr	* Enforce Bounds	False

User Value [PStar]

Parameter			Upper Bound	
Lower Bound			* Enforce Bounds	False

User Value [AllCTotalLosses]

* Parameter	3.50726	ton/yr	Upper Bound	ton/yr
Lower Bound		ton/yr	* Enforce Bounds	False

User Value [AllCLoadingLosses]

* Parameter	0	ton/yr	Upper Bound	ton/yr

Copyright © 2002-2019 BRE Group, Ltd.
Licensed to Esso Exploration, Inc.

User Value Sets Report

Client Name:	XTO ENERGY INC	Job: DELAWARE DEVELOPMENT
Location:	Husky CDP	

User Value [AllCLoadingLosses]

Lower Bound	ton/yr	* Enforce Bounds	False

User Value [AllCMaxHLoadingLoss]

* Parameter	0 lb/hr	Upper Bound	lb/hr
Lower Bound	lb/hr	* Enforce Bounds	False

User Value [AllCFlashingLosses]

* Parameter	0 ton/yr	Upper Bound	ton/yr
Lower Bound	ton/yr	* Enforce Bounds	False

User Value [DeckFittingLosses]

* Parameter	0 ton/yr	Upper Bound	ton/yr
Lower Bound	ton/yr	* Enforce Bounds	False

User Value [DeckSeamLosses]

* Parameter	0 ton/yr	Upper Bound	ton/yr
Lower Bound	ton/yr	* Enforce Bounds	False

User Value [FlashingLosses]

* Parameter	0 ton/yr	Upper Bound	ton/yr
Lower Bound	ton/yr	* Enforce Bounds	False

User Value [TotalResidual]

* Parameter	640835 ton/yr	Upper Bound	ton/yr
Lower Bound	ton/yr	* Enforce Bounds	False

User Value [GasMoleWeight]

* Parameter	0.0181502 kg/mol	Upper Bound	kg/mol
Lower Bound	kg/mol	* Enforce Bounds	False

User Value [VapReportableFrac]

* Parameter	0.589517 %	Upper Bound	%
Lower Bound	%	* Enforce Bounds	False

User Value [LiqReportableFrac]

* Parameter	0.0118263 %	Upper Bound	%
Lower Bound	%	* Enforce Bounds	False

User Value [FlashReportableFrac]

* Parameter	0 %	Upper Bound	%
Lower Bound	%	* Enforce Bounds	False

Remarks

This User Value Set was programmatically generated. GUID={7D1191AD-F2C5-40D3-ACF6-4BD926C57748}

Slop

User Value [BlockReady]

* Parameter	1	Upper Bound	
Lower Bound		* Enforce Bounds	False

User Value [ShellLength]

* Parameter	25 ft	Upper Bound	ft

ProMax 5.0.19050.0
Copyright © 2002-2019 BRE Group, Ltd.
Licensed to Esso Exploration, Inc.

User Value Sets Report

Client Name:	XTO ENERGY INC	Job: DELAWARE DEVELOPMENT
Location:	Husky CDP	

User Value [ShellLength]

Lower Bound	ft	* Enforce Bounds	False

User Value [ShellDiam]

* Parameter	12 ft	Upper Bound	ft
Lower Bound	ft	* Enforce Bounds	False

User Value [BreatherVP]

* Parameter	0.03 psig	Upper Bound	psig
Lower Bound	psig	* Enforce Bounds	False

User Value [BreatherVacP]

* Parameter	-0.03 psig	Upper Bound	psig
Lower Bound	psig	* Enforce Bounds	False

User Value [DomeRadius]

Parameter	ft	Upper Bound	ft
Lower Bound	ft	* Enforce Bounds	False

User Value [OpPress]

* Parameter	0 psig	Upper Bound	psig
Lower Bound	psig	* Enforce Bounds	False

User Value [AvgPercentLiq]

* Parameter	50 %	Upper Bound	%
Lower Bound	%	* Enforce Bounds	False

User Value [MaxPercentLiq]

* Parameter	90 %	Upper Bound	%
Lower Bound	%	* Enforce Bounds	False

User Value [AnnNetTP]

* Parameter	2088.04 bbl/day	Upper Bound	bbl/day
Lower Bound	bbl/day	* Enforce Bounds	False

User Value [OREff]

* Parameter	0 %	Upper Bound	%
Lower Bound	%	* Enforce Bounds	False

User Value [MaxAvgT]

* Parameter	75.7333 °F	Upper Bound	°F
Lower Bound	°F	* Enforce Bounds	False

User Value [MinAvgT]

* Parameter	45.9 °F	Upper Bound	°F
Lower Bound	°F	* Enforce Bounds	False

User Value [BulkLiqT]

* Parameter	89.9816 °F	Upper Bound	°F
Lower Bound	°F	* Enforce Bounds	False

User Value [AvgP]

* Parameter	12.731 psia	Upper Bound	psia
Lower Bound	psia	* Enforce Bounds	False

ProMax 5.0.19050.0
Copyright © 2002-2019 BRE Group, Ltd.
Licensed to Esso Exploration, Inc.

User Value Sets Report

Client Name:	XTO ENERGY INC	Job: DELAWARE DEVELOPMENT
Location:	Husky CDP	

User Value [Therml]

* Parameter	1810	Btu/ft^2/day	Upper Bound	Btu/ft^2/day
Lower Bound		Btu/ft^2/day	* Enforce Bounds	False

User Value [AvgWindSpeed]

* Parameter	8.68333	mi/h	Upper Bound	mi/h
Lower Bound		mi/h	* Enforce Bounds	False

User Value [MaxHourlyLoadingRate]

* Parameter	210	bbl/hr	Upper Bound	bbl/hr
Lower Bound		bbl/hr	* Enforce Bounds	False

User Value [FlashingT]

* Parameter	94.1157	°F	Upper Bound	°F
Lower Bound		°F	* Enforce Bounds	False

User Value [EntrainedOilFrac]

* Parameter	1	%	Upper Bound	%
Lower Bound		%	* Enforce Bounds	False

User Value [TurnoverRate]

* Parameter	1681.39		Upper Bound	
Lower Bound			* Enforce Bounds	False

User Value [LLossSatFactor]

* Parameter	0.6		Upper Bound	
Lower Bound			* Enforce Bounds	False

User Value [AtmPressure]

* Parameter	12.731	psia	Upper Bound	psia
Lower Bound		psia	* Enforce Bounds	False

User Value [TVP]

* Parameter	10.1955	psia	Upper Bound	psia
Lower Bound		psia	* Enforce Bounds	False

User Value [MaxVP]

* Parameter	11.8971	psia	Upper Bound	psia
Lower Bound		psia	* Enforce Bounds	False

User Value [MinVP]

* Parameter	8.62407	psia	Upper Bound	psia
Lower Bound		psia	* Enforce Bounds	False

User Value [AvgLiqSurfaceT]

* Parameter	83.2976	°F	Upper Bound	°F
Lower Bound		°F	* Enforce Bounds	False

User Value [MaxLiqSurfaceT]

* Parameter	94.1157	°F	Upper Bound	°F
Lower Bound		°F	* Enforce Bounds	False

User Value [TotalLosses]

* Parameter	35.4629	ton/yr	Upper Bound	ton/yr
Lower Bound		ton/yr	* Enforce Bounds	False

ProMax 5.0.19050.0
Copyright © 2002-2019 BRE Group, Ltd.
Licensed to Esso Exploration, Inc.

User Value Sets Report

Client Name:	XTO ENERGY INC	Job: DELAWARE DEVELOPMENT
Location:	Husky CDP	

User Value [WorkingLosses]

* Parameter	31.9624	ton/yr	Upper Bound	ton/yr
Lower Bound		ton/yr	* Enforce Bounds	False

User Value [StandingLosses]

* Parameter	3.50055	ton/yr	Upper Bound	ton/yr
Lower Bound		ton/yr	* Enforce Bounds	False

User Value [RimSealLosses]

* Parameter	0	ton/yr	Upper Bound	ton/yr
Lower Bound		ton/yr	* Enforce Bounds	False

User Value [WithdrawalLoss]

* Parameter	0	ton/yr	Upper Bound	ton/yr
Lower Bound		ton/yr	* Enforce Bounds	False

User Value [LoadingLosses]

* Parameter	100.177	ton/yr	Upper Bound	ton/yr
Lower Bound		ton/yr	* Enforce Bounds	False

User Value [MaxHourlyLoadingLoss]

* Parameter	55.2057	lb/hr	Upper Bound	lb/hr
Lower Bound		lb/hr	* Enforce Bounds	False

User Value [PStar]

Parameter			Upper Bound	
Lower Bound			* Enforce Bounds	False

User Value [AllCTotalLosses]

* Parameter	39.9698	ton/yr	Upper Bound	ton/yr
Lower Bound		ton/yr	* Enforce Bounds	False

User Value [AllCLoadingLosses]

* Parameter	112.908	ton/yr	Upper Bound	ton/yr
Lower Bound		ton/yr	* Enforce Bounds	False

User Value [AllCMaxHLoadingLoss]

* Parameter	62.2216	lb/hr	Upper Bound	lb/hr
Lower Bound		lb/hr	* Enforce Bounds	False

User Value [AllCFlashingLosses]

* Parameter	258.643	ton/yr	Upper Bound	ton/yr
Lower Bound		ton/yr	* Enforce Bounds	False

User Value [DeckFittingLosses]

* Parameter	0	ton/yr	Upper Bound	ton/yr
Lower Bound		ton/yr	* Enforce Bounds	False

User Value [DeckSeamLosses]

* Parameter	0	ton/yr	Upper Bound	ton/yr
Lower Bound		ton/yr	* Enforce Bounds	False

User Value [FlashingLosses]

* Parameter	232.985	ton/yr	Upper Bound	ton/yr

Copyright © 2002-2019 BRE Group, Ltd.
Licensed to Esso Exploration, Inc.

User Value Sets Report

Client Name:	XTO ENERGY INC	Job: DELAWARE DEVELOPMENT
Location:	Husky CDP	

User Value [FlashingLosses]

Lower Bound	ton/yr	* Enforce Bounds	False

User Value [TotalResidual]

* Parameter	105094 ton/yr	Upper Bound	ton/yr
Lower Bound	ton/yr	* Enforce Bounds	False

User Value [GasMoleWeight]

* Parameter	0.050254 kg/mol	Upper Bound	kg/mol
Lower Bound	kg/mol	* Enforce Bounds	False

User Value [VapReportableFrac]

* Parameter	88.7243 %	Upper Bound	%
Lower Bound	%	* Enforce Bounds	False

User Value [LiqReportableFrac]

* Parameter	99.9335 %	Upper Bound	%
Lower Bound	%	* Enforce Bounds	False

User Value [FlashReportableFrac]

* Parameter	90.0798 %	Upper Bound	%
Lower Bound	%	* Enforce Bounds	False

Remarks
This User Value Set was programmatically generated. GUID={DA0C1C04-99D5-467D-B7DC-284F34088AB7}

GB

User Value [BlockReady]

* Parameter	1	Upper Bound	
Lower Bound		* Enforce Bounds	False

User Value [ShellLength]

* Parameter	30 ft	Upper Bound	ft
Lower Bound	ft	* Enforce Bounds	False

User Value [ShellDiam]

* Parameter	15.5 ft	Upper Bound	ft
Lower Bound	ft	* Enforce Bounds	False

User Value [BreatherVP]

* Parameter	0.03 psig	Upper Bound	psig
Lower Bound	psig	* Enforce Bounds	False

User Value [BreatherVacP]

* Parameter	-0.03 psig	Upper Bound	psig
Lower Bound	psig	* Enforce Bounds	False

User Value [DomeRadius]

Parameter	ft	Upper Bound	ft
Lower Bound	ft	* Enforce Bounds	False

User Value [OpPress]

* Parameter	0 psig	Upper Bound	psig

ProMax 5.0.19050.0
Copyright © 2002-2019 BRE Group, Ltd.
Licensed to Esso Exploration, Inc.

User Value Sets Report

Client Name:	XTO ENERGY INC	Job: DELAWARE DEVELOPMENT
Location:	Husky CDP	

User Value [OpPress]

Lower Bound		psig	* Enforce Bounds	False	

User Value [AvgPercentLiq]

* Parameter	50	%	Upper Bound		%
Lower Bound		%	* Enforce Bounds	False	

User Value [MaxPercentLiq]

* Parameter	90	%	Upper Bound		%
Lower Bound		%	* Enforce Bounds	False	

User Value [AnnNetTP]

* Parameter	12110.4	bbl/day	Upper Bound		bbl/day
Lower Bound		bbl/day	* Enforce Bounds	False	

User Value [OREff]

Parameter		%	Upper Bound		%
Lower Bound		%	* Enforce Bounds	False	

User Value [MaxAvgT]

* Parameter	75.7333	°F	Upper Bound		°F
Lower Bound		°F	* Enforce Bounds	False	

User Value [MinAvgT]

* Parameter	45.9	°F	Upper Bound		°F
Lower Bound		°F	* Enforce Bounds	False	

User Value [BulkLiqT]

* Parameter	70.3783	°F	Upper Bound		°F
Lower Bound		°F	* Enforce Bounds	False	

User Value [AvgP]

* Parameter	12.731	psia	Upper Bound		psia
Lower Bound		psia	* Enforce Bounds	False	

User Value [Therml]

* Parameter	1810	Btu/ft^2/day	Upper Bound		Btu/ft^2/day
Lower Bound		Btu/ft^2/day	* Enforce Bounds	False	

User Value [AvgWindSpeed]

* Parameter	8.68333	mi/h	Upper Bound		mi/h
Lower Bound		mi/h	* Enforce Bounds	False	

User Value [MaxHourlyLoadingRate]

Parameter		bbl/hr	Upper Bound		bbl/hr
Lower Bound		bbl/hr	* Enforce Bounds	False	

User Value [FlashingT]

* Parameter	83.1379	°F	Upper Bound		°F
Lower Bound		°F	* Enforce Bounds	False	

User Value [EntrainedOilFrac]

* Parameter	1	%	Upper Bound		%
Lower Bound		%	* Enforce Bounds	False	

ProMax 5.0.19050.0
Copyright © 2002-2019 BRE Group, Ltd.
Licensed to Esso Exploration, Inc.

User Value Sets Report

Client Name:	XTO ENERGY INC	Job: DELAWARE DEVELOPMENT
Location:	Husky CDP	

User Value [TurnoverRate]

* Parameter	4870.86		Upper Bound	
Lower Bound			* Enforce Bounds	False

User Value [LLossSatFactor]

Parameter			Upper Bound	
Lower Bound			* Enforce Bounds	False

User Value [AtmPressure]

* Parameter	12.731	psia	Upper Bound	psia
Lower Bound		psia	* Enforce Bounds	False

User Value [TVP]

* Parameter	0.584951	psia	Upper Bound	psia
Lower Bound		psia	* Enforce Bounds	False

User Value [MaxVP]

* Parameter	0.785644	psia	Upper Bound	psia
Lower Bound		psia	* Enforce Bounds	False

User Value [MinVP]

* Parameter	0.433806	psia	Upper Bound	psia
Lower Bound		psia	* Enforce Bounds	False

User Value [AvgLiqSurfaceT]

* Parameter	72.3198	°F	Upper Bound	°F
Lower Bound		°F	* Enforce Bounds	False

User Value [MaxLiqSurfaceT]

* Parameter	83.1379	°F	Upper Bound	°F
Lower Bound		°F	* Enforce Bounds	False

User Value [TotalLosses]

* Parameter	3.00798	ton/yr	Upper Bound	ton/yr
Lower Bound		ton/yr	* Enforce Bounds	False

User Value [WorkingLosses]

* Parameter	2.95723	ton/yr	Upper Bound	ton/yr
Lower Bound		ton/yr	* Enforce Bounds	False

User Value [StandingLosses]

* Parameter	0.0507489	ton/yr	Upper Bound	ton/yr
Lower Bound		ton/yr	* Enforce Bounds	False

User Value [RimSealLosses]

* Parameter	0	ton/yr	Upper Bound	ton/yr
Lower Bound		ton/yr	* Enforce Bounds	False

User Value [WithdrawalLoss]

* Parameter	0	ton/yr	Upper Bound	ton/yr
Lower Bound		ton/yr	* Enforce Bounds	False

User Value [LoadingLosses]

* Parameter	0	ton/yr	Upper Bound	ton/yr
Lower Bound		ton/yr	* Enforce Bounds	False

ProMax 5.0.19050.0
Copyright © 2002-2019 BRE Group, Ltd.
Licensed to Esso Exploration, Inc.

User Value Sets Report

Client Name:	XTO ENERGY INC	Job: DELAWARE DEVELOPMENT
Location:	Husky CDP	

User Value [MaxHourlyLoadingLoss]

* Parameter	0	lb/hr	Upper Bound	lb/hr
Lower Bound		lb/hr	* Enforce Bounds	False

User Value [PStar]

Parameter			Upper Bound	
Lower Bound			* Enforce Bounds	False

User Value [AllCTotalLosses]

* Parameter	6.35256	ton/yr	Upper Bound	ton/yr
Lower Bound		ton/yr	* Enforce Bounds	False

User Value [AllCLoadingLosses]

* Parameter	0	ton/yr	Upper Bound	ton/yr
Lower Bound		ton/yr	* Enforce Bounds	False

User Value [AllCMaxHLoadingLoss]

* Parameter	0	lb/hr	Upper Bound	lb/hr
Lower Bound		lb/hr	* Enforce Bounds	False

User Value [AllCFlashingLosses]

* Parameter	845.13	ton/yr	Upper Bound	ton/yr
Lower Bound		ton/yr	* Enforce Bounds	False

User Value [DeckFittingLosses]

* Parameter	0	ton/yr	Upper Bound	ton/yr
Lower Bound		ton/yr	* Enforce Bounds	False

User Value [DeckSeamLosses]

* Parameter	0	ton/yr	Upper Bound	ton/yr
Lower Bound		ton/yr	* Enforce Bounds	False

User Value [FlashingLosses]

* Parameter	719.84	ton/yr	Upper Bound	ton/yr
Lower Bound		ton/yr	* Enforce Bounds	False

User Value [TotalResidual]

* Parameter	745433	ton/yr	Upper Bound	ton/yr
Lower Bound		ton/yr	* Enforce Bounds	False

User Value [GasMoleWeight]

* Parameter	0.0279518	kg/mol	Upper Bound	kg/mol
Lower Bound		kg/mol	* Enforce Bounds	False

User Value [VapReportableFrac]

* Parameter	47.3507	%	Upper Bound	%
Lower Bound		%	* Enforce Bounds	False

User Value [LiqReportableFrac]

* Parameter	14.0261	%	Upper Bound	%
Lower Bound		%	* Enforce Bounds	False

User Value [FlashReportableFrac]

* Parameter	85.175	%	Upper Bound	%

Copyright © 2002-2019 BRE Group, Ltd.
Licensed to Esso Exploration, Inc.

User Value Sets Report

Client Name:	XTO ENERGY INC	Job: DELAWARE DEVELOPMENT
Location:	Husky CDP	

User Value [FlashReportableFrac]

Lower Bound	%	* Enforce Bounds	False

Remarks
This User Value Set was programmatically generated. GUID={ADCE19B5-388C-490C-A0F0-927EC4A6AF62}

ProMax 5.0.19050.0
Copyright © 2002-2019 BRE Group, Ltd.
Licensed to Esso Exploration, Inc.

Turbines

Manufacturer Data

NOOTER/ERIKSEN

Emissions with Catalyst Present

Proposal No: 290202 **Plant Site:** **Date:** 10/2/2019

Purchaser: ExxonMobil **Plant Name:** Permian Basin

End User: **Turbine:** H-100 **Revision:** B7

Case	**1**	**3A_new**	**5A_new**	**5**	**5D**	**9**	**3E**	**9**
Description	Unfired	Reduced firing for Mott	Reduced firing for Mott	Unfired	Unfired 70% load	Unfired - Max oil exit temperature	Unfired 70% load - No recirculation	Unfired - Max oil exit temperature
Emissions Use	Tpy calculation					Dispersion modelling - upper exit temperature limit	Dispersion modelling - lower exit velocity limit	Dispersion modelling - upper exit velocity limit
Ambient Temperature (F)	64	105	25	25	25	25	105	25
GT Exhaust Gas Flow (lb/hr)	1,972,800	1,711,440	2,180,160	2,180,160	1,723,320	2,180,160	1,406,520	2,180,160
GT Exhaust Gas Temperature (°F)	1008	1048	964	964	1015	964	1088	964
N2 vol%	74.70	74.98	75.20	75.20	75.21	75.20	75.04	75.20
O2 vol%	13.44	13.66	13.58	13.58	13.62	13.58	13.81	13.58
CO2 vol%	3.33	3.26	3.33	3.33	3.31	3.33	3.19	3.33
H2O vol%	7.64	7.21	7.00	7.00	6.96	7.00	7.07	7.00
SO2 vol%	0.00	0.00	0.00	0.00	0.00	0.00	0.00	0.00
Ar vol%	0.89	0.89	0.89	0.89	0.90	0.89	0.89	0.89
NOX (lb/hr)	6.3	7.3	8.4	7.0	5.5	7.0	4.3	7.0
NOX (ppmvd @ 15% O2)	2	2	2	2	2	2	2	2
CO (lb/hr)	3.9	4.4	5.1	4.3	3.3	4.3	2.6	4.3
CO (ppmvd @ 15% O2)	2	2	2	2	2	2	2	2
VOC (lb/hr, molecular weight of methane)	3.5	5.5	5.8	3.9	3.1	3.9	2.4	3.9
VOC (ppmvd @ 15% O2, molecular weight of methane)	3.2	4.4	4.0	3.2	3.2	3.2	3.2	3.2
VOC (lb/hr, molecular weight of formaldehyde)	6.6	8.2	9.2	7.3	5.7	7.3	4.5	7.3
VOC (ppmvd @ 15% O2, molecular weight of formaldehyde)	3.2	4.4	4.0	3.2	3.2	3.2	3.2	3.2
UHC (lb/hr)	5.5	18.0	16.0	6.1	7.6	6.1	3.8	6.1
UHC (ppmvd @ 15% O2)	5	14.2	11	5	8.0	5	5	5
PM (lb/hr)	5.5	8.6	9.2	6.1	4.8	6.1	3.9	6.1
PM (lb/mmBtu - HHV)	0.0062	0.0085	0.0078	0.0062	0.0062	0.0062	0.0063	0.0062
Burner duty (mmBtu/hr - LHV)	n/a	239.78	179.52	n/a	n/a	n/a	n/a	n/a
Ammonia consumption (19% aq., lb.hr)	92.7	150.4	155.9	102.1	80.2	102.1	63.2	102.1

NOOTER/ERIKSEN

Emissions with No Catalyst Present

Proposal No: 290202 **Plant Site:** **Date:** 10/2/2019

Purchaser: ExxonMobil **Plant Name:** Permian Basin

End User: **Turbine:** H-100 **Revision:** B7

Case	**1**	**3A_new**	**5A_new**	**5**	**5D**	**9**	**3E**	**9**
Description	Unfired	Reduced firing for Mott	Reduced firing for Mott	Unfired	Unfired 70% load	Unfired - Max oil exit temperature	Unfired 70% load - No recirculation	Unfired - Max oil exit temperature
Emissions Use	Tpy calculation					Dispersion modelling - upper exit temperature limit	Dispersion modelling - lower exit velocity limit	Dispersion modelling - upper exit velocity limit
Ambient Temperature (F)	64	105	25	25	25	25	105	25
Exhaust Gas Flow (lb/hr)	1,972,800	1,711,440	2,180,160	2,180,160	1,723,320	2,180,160	1,406,520	2,180,160
Exhaust Gas Temperature (°F)	1008	1048	964	964	1015	964	1088	964
N2 vol%	74.70	74.98	75.20	75.20	75.21	75.20	75.04	75.20
O2 vol%	13.44	13.66	13.58	13.58	13.62	13.58	13.81	13.58
CO2 vol%	3.33	3.26	3.33	3.33	3.31	3.33	3.19	3.33
H2O vol%	7.64	7.21	7.00	7.00	6.96	7.00	7.07	7.00
SO2 vol%	0.00	0.00	0.00	0.00	0.00	0.00	0.00	0.00
Ar vol%	0.89	0.89	0.89	0.89	0.90	0.89	0.89	0.89
NOX (lb/hr)	28.5	50.8	51.4	31.4	24.7	31.4	19.5	31.4
NOX (ppmvd @ 15% O2)	9.0	13.9	12.2	9.0	9.0	9.0	9.0	9.0
CO (lb/hr)	17.4	36.0	35.1	19.1	41.8	19.1	11.8	19.1
CO (ppmvd @ 15% O2)	9.0	16.2	13.7	9.0	25.0	9.0	9.0	9.0
VOC (lb/hr, molecular weight of methane)	5.5	8.7	9.1	6.1	4.8	6.1	3.8	6.1
VOC (ppmvd @ 15% O2, molecular weight of methane)	5.0	6.8	6.2	5.0	5.0	5.0	5.0	5.0
VOC (lb/hr, molecular weight of formaldehyde)	10.3	12.8	14.4	11.4	9.0	11.4	7.0	11.4
VOC (ppmvd @ 15% O2, molecular weight of formaldehyde)	5.0	6.8	6.2	5.0	5.0	5.0	5.0	5.0
UHC (lb/hr)	5.5	18.0	16.0	6.1	7.6	6.1	3.8	6.1
UHC (ppmvd @ 15% O2)	5.0	14.2	10.9	5.0	8.0	5.0	5.0	5.0
PM (fuel sulfur 0.75 grains/scf, lb/hr)	5.5	8.6	9.2	6.1	4.8	6.1	3.9	6.1
PM (lb/mmBtu - HHV)	0.0062	0.0085	0.0078	0.0062	0.0062	0.0062	0.0063	0.0062
Burner duty (mmBtu/hr - LHV)	n/a	239.78	179.52	n/a	n/a	n/a	n/a	n/a

Basis for Emissions Data

GT emissions data:

NOx (ppmvd @ 15% O2)	9	9	9	9	9	9	9	9	9	9	9
CO (ppmvd @ 15% O2)	9	9	9	9	9	9	25	9	9	9	9
UHC (ppmvd @ 15% O2)	5	5	5	5	5	5	5	5	5	5	5
VOC (ppmvd @ 15% O2)	5	5	5	5	5	5	5	5	5	5	5
PM (lb/hr)	2.9	2.9	3.2	2.5	3.2	3.2	2.5	2.9	3.2	2.1	3.2

Fuel flow rate (lb/s)	10.92	10.92	12.04	9.25	12.04	12.04	9.53	10.92	12.04	7.5	12.04

Fuel gas composition (vol%):

CH4	96.74%
C2H6	0.08%
CO2	0.01%
N2	3.17%
Sulfur content (grains/100 scf)	0.75
Fuel LHV (btu/lb)	20350
Fuel HHV (btu/lb)	22583

1. All case data comes from design revision B7. This design does not constitute a finalized design for this project. The cases provided do not represent the entire operating envelope of the HRSG. The cases provided do not represent finalized operating conditions for each respective case.
2. GT emissions data used was found in “0960_H100_PartloadEmissions – MHPSA Estimate R1 2019-05-29” dated 2019-05-29.
3. VOCs are expressed as non-methane and non-ethane less than 50% saturated basis, with a basis of molecular weight of methane or molecular weight of formaldehyde.
4. All emission levels are at steady state operation.
5. Any emissions measurement uncertainty will be to the Customer’s account.
6. Emissions testing will be in accordance with a mutually agreed test procedure that is in general accordance with standard EPA test methods. Furthermore, condensable PM test method shall be OTM-37.
7. Testing shall not occur until 1 full week of operation has commenced, including at least 5 startups and shutdowns to full CT load.
8. CT and HRSG must have run for 1 hour prior to and remain at steady state conditions for the duration of the tests and limited to CTG loads within range specified for emissions compliance. No transient operation is permitted for the duration of the test.
9. The emissions data is provided on a no-harm, no-foul basis. If the air permit requirements are met, then N/E’s emissions levels will be deemed to have been met.
10. Any sulfate formed in the condensable portion of the PM10/2.5 field measurement shall be excluded.
11. The sum of the simultaneously measured contributions of sulfur compounds must not exceed 100% of the sulfur content in the combustion fuel. N/E emissions levels are limited to a summation accounting for ≤ 100% of the incoming sulfur.

Heaters

Manufacturer Data

Owner:	XTO		Owner Ref.:	H-16-F700
Purchaser:	Linde Engineering N.A.		Purchaser Ref.:	2110A4YK
Manufacturer:	Tulsa Heaters Midstream		THM Ref.:	MJ18-327
Service:	Regen Gas Heater		Project:	Cowboy Cryo Plant
Number:	1		Location:	New Mexico
SHO Duty:	27.73	MMBTU/ hr	SHO Model:	SHO2500

Guarantees

*Regen Heaters

NOx	0.0267	Lb/MMBTU	20	ppm
SOx	no quote	Lb/MMBTU	-	ppm
CO	0.0163	Lb/MMBTU	20	ppm
VOC	0.0064	Lb/MMBTU	5	ppm
UHC	0.007	Lb/MMBTU	15	ppm
SPM	0.0128	Lb/MMBTU	15	ppm

		Design Case				Maximum Case			
Heat Release	LHV Basis	35.25	MMBTU/hr			38.77	MMBTU/hr		
	HHV Basis	39.14	MMBTU/hr						
Products of Combus	MW								
O2	32.00	886	Lbm/ hr			1,083	Lbm/ hr		
N2 + Ar	28.15	22,517	Lbm/ hr			27,520	Lbm/ hr		
CO2	44.01	4,051	Lbm/ hr			4,952	Lbm/ hr		
H2O	18.02	3,490	Lbm/ hr			4,265	Lbm/ hr		
NOx	46.01	0.85	Lbm/ hr /	20	ppm	0.93	Lbm/ hr /	20	ppm
SOx	64.06	0.00	Lbm/ hr /	0	ppm	0.00	Lbm/ hr /	0	ppm
CO	28.01	0.52	Lbm/ hr /	20	ppm	0.57	Lbm/ hr /	20	ppm
VOC	44.10	0.20	Lbm/ hr /	5	ppm	0.22	Lbm/ hr /	5	ppm
UHC	16.04	0.22	Lbm/ hr /	15	ppm	0.24	Lbm/ hr /	15	ppm
SPM		0.40	Lbm/ hr /	15	ppm	0.44	Lbm/ hr /	15	ppm
Total		30,946	Lbm/ hr			37,821	Lbm/ hr		
Flue Gas Exit Temp.		470	°F						
Flue Gas Exit Velocity		~~52.3~~	Ft/sec			57.5	Ft/sec		
Stack Height		~~27.1~~	ft			~~27.~~1	ft		
Stack ID		32	in			32	in		

*Since velocity was not provided for 39.14, the value at 38.77 was used.

NOTE:

THM emissions guarantees applicable between 50-100% of Design Case combustion conditions w/ 15% excess air.

THM emissions guarantees applicable for firebox temperatures above 1100 F.

Emissions above are for Design Case operation with air and fuel in ratio control. Upset conditions, such as operation outside the design, high turndown or start-up are not considered as guaranteed emissions cases.

The Maximum Case is the the specified heat release for the burner purchased. Extra duty is spec'd into the burner to ensure that the burner is never the limiting factor on duty.

revision	date	description	by	chk'd	appv'd

This document contains confidential information proprietary to THM. This document shall not be used, reproduced or disclosed without the prior written consent of THM.

COMPONENT DESCRIPTION

ITEM	QTY	DESCRIPTION
1	1	CALLIDUS BURNER (ENHANCED IFGR ULTRA LOW NOX CUBL-8W-HC-HZ)
2	2	3/16" PL RADIANT SIDE WALLS - A36
3	1	3/16" PL RADIANT ROOF - A36
4	1	3/16" PL RADIANT FLOOR - A36
5	2	3/16" PL RADIANT END WALL - A36
6	2	3/16" PL CONVECTION SIDE WALL - A36
7	2	3/8" PL CONVECTION TUBE SHEETS - A36
8	2	10 GA. PL RETURN COVERS - A36
9	1	3/16" PL TRANSITION - A36
10	1	32" O.D. x 3/16" PL. STACK - A36
11	1	24" x 24" ACCESS DOOR @ RADIANT END WALL
12		NOT USED
13		LIFTING LUGS (STRAIGHT UP LIFT ONLY) - A36
14		5/8" GALV. HIGH STRENGTH BOLT w/ BEVEL WASHER & HEAVY HEX NUT - A325
15		5/8" GALV. HIGH STRENGTH BOLT w/ HARDENED WASHER & HEAVY HEX NUT - A325
16		5/8" GALV. MACHINE BOLT w/ FLAT WASHER & HEX NUT - A307
17A	1	1 1/2" - 3000# THR'D COUPLING w/ PLUG (CS) w/ 304SS PIPE SLEEVE - SPARE
17B	1	1 1/2" - 3000# THR'D COUPLING w/ PLUG (CS) w/ 304SS PIPE SLEEVE - STACK TEMPERATURE
18A	1	1 1/2" - 3000# THR'D COUPLING w/ PLUG (CS) w/ 304SS PIPE SLEEVE - SPARE
18B	1	1 1/2" - 3000# THR'D COUPLING w/ PLUG (CS) w/ 304SS PIPE SLEEVE - SPARE
19A	1	1 1/2" - 3000# THR'D COUPLING w/ PLUG (CS) w/ 304SS PIPE SLEEVE - FURNACE PRESSURE
19B	1	1 1/2" - 3000# THR'D COUPLING w/ PLUG (CS) w/ 304SS PIPE SLEEVE - SPARE
20		NOT USED
21		NOT USED
22	1	1 1/2" - 3000# THR'D COUPLING w/ PLUG (CS) w/ 304SS PIPE SLEEVE - SPARE
23	2	4" - 150# RFWN FLG w/ BLIND (CS) w/ CS PIPE SLEEVE - SAMPLE PORT
24		NOT USED
25		14 GA. FERRULES - 304SS (@ TUBE SHEET)
26		10 GA. FERRULES - C.S. (@ RETURN COVERS)
27		10 GA. FERRULES - 304SS (@ RADIANT SHELL)
28	1	4" SITE PORT W/ 304SS PIPE SLEEVE (@ RADIANT SHELL)
29	1	THM NAME PLATE (304SS)
30	8	FLEXIBLE TUBE SEALS (SOCK & CLAMP) - SHOP INSTALLED
31		1/2" DIA. GALV MACHINE BOLT w/ FLAT WASHER & HEAVY HEX NUT - A307
32		3/4" GALV. HIGH STRENGTH BOLT w/ HARDENED WASHER & HEAVY HEX NUT - A325
33	1	OUTLET SUPPORT - A36
34	1	COMBUSTION MODULE SKID 5500 W/ CONTROL PANEL

DRAWING LIST

GENERAL ARRANGEMENT, FOUNDATION, & COIL FABRICATION DRAWING LIST IS AS FOLLOWS:
PREFIX ALL DRAWINGS NUMBERS w/ JOB NUMBERS
DRAWING NO. - 1A - GENERAL ARRANGMENT SIDE ELEVATION
DRAWING NO. - 1B - GENERAL ARRANGMENT ELEV. BURNER & TARGET END
DRAWING NO. - 1C - GENERAL ARRANGMENT PLAN VIEW
DRAWING NO. - 1D - REFRACTORY, PAINT, & INST. CONN'S
DRAWING NO. - 2A - ANCHOR BOLT PLAN & FOUNDATION LOADS
DRAWING NO. - 4A - CONVECTION COIL, OUTLET SPOOL & CROSSOVER.
DRAWING NO. - 4B - RADIANT COIL

NOTES:

1. FOR FIELD INSTALLATION SEE THM SUGGESTED ERECTION PROCEDURE FOR SHO HEATERS.

CUSTOMER CONNECTIONS

MARK	SIZE	RATING	TYPE	MATERIAL	SERVICE
N1	10"	600#	RFWN	SA105	PROCESS INLET
N2	10"	600#	RFWN	SA105	PROCESS OUTLET
N3	1 1/2"	3000#	FNPT	SA105	SPARE
N4	4"	150#	RFWN	SA105	SAMPLE PORT
N5	4"	150#	RFWN	SA105	SAMPLE PORT
N6	1 1/2"	3000#	FNPT	SA105	TEMPERATURE CONNECTION
N7	1 1/2"	3000#	FNPT	SA105	SPARE
N8	1 1/2"	3000#	FNPT	SA105	SPARE
N9	1 1/2"	3000#	FNPT	SA105	SPARE
N10	1 1/2"	3000#	FNPT	SA105	SPARE
N11	1 1/2"	3000#	FNPT	SA105	FURNACE PRESSURE
N12	1 1/2"	900#	RFWN	SA105	SPARE CONNECTION
N13	1 1/2"	900#	RFWN	SA105	P.I. CONNECTION
N14	1 1/2"	900#	RFWN	SA105	SPARE CONNECTION
N15	1 1/2"	900#	RFWN	SA105	SPARE CONNECTION
N16	1/2"	150#	RF	SA105	FUEL GAS VENT

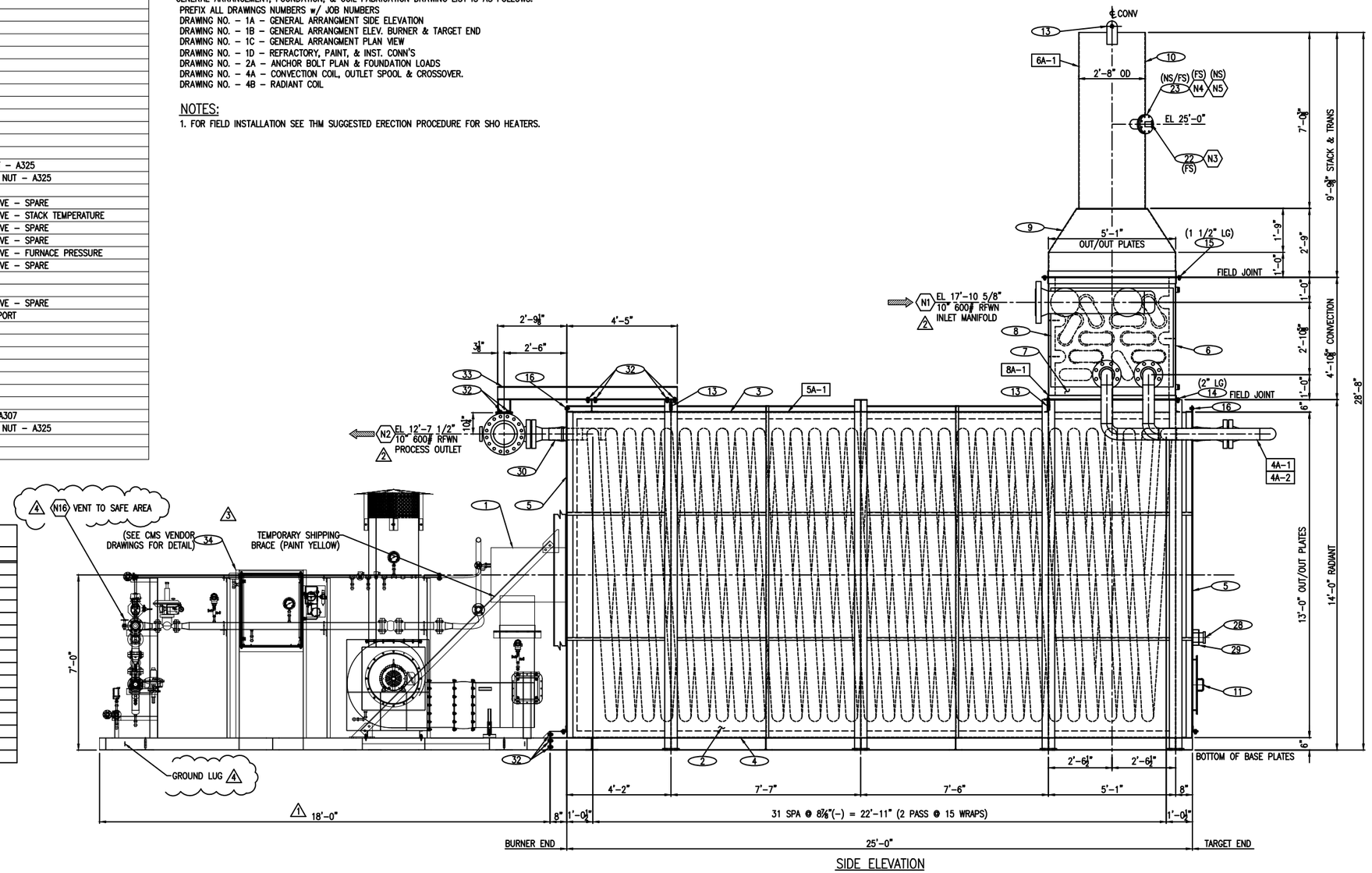

SIDE ELEVATION

PROPRIETARY INFORMATION

The information and designs shown herein, including all patented and patentable features are the property of, proprietary and confidential to TULSA HEATERS MIDSTREAM LLC.
This document shall not be reproduced in whole or part, or disclosed to any third party without the express written consent of TULSA HEATERS MIDSTREAM LLC. All copies of this document, printed or electronic, are null and void if modified or altered in any way.
Only TULSA HEATERS MIDSTREAM LLC possesses the controlling document in its original state and shall govern over any copy, printed or electronic.

Customer:
LINDE ENGINEERING NA
XTO

LOCATION : NEW MEXICO
UNIT : N/A
SERVICE : REGEN GAS HEATER
EQUIPMENT No. : H-3132
P.O. No. : 004 2DA6490 (2)
SHO : 2500

Rev.	Date	By	Revision Description
1	5/29	SDB	REV ADDED CMS
2	7/23	SDB	REV PER CUSTOMER COMMENTS
3	11/22	SDB	REV CMS
4	1/7/19	RU	REV PER CUSTOMER COMMENTS

THM TULSA HEATERS MIDSTREAM

Title: GENERAL ARRANGEMENT SIDE ELEV

Drawn By: JRW	Date: 4/14/18	Job No.: MJ18-327	
Checked By: ASW	Date: 4/18/18	Drawing No.: MJ18327-1A	Rev.: 4
Approved By:	Certified By:		

Owner:	XTO Energy		Owner Ref.:	PK-6010
Purchaser:	Audubon		Purchaser Ref.:	018193001
Manufacturer:	Tulsa Heaters Midstream		THM Ref.:	MJ18-346
Service:	Hot Oil Heater		Project:	Cowboy CDP
Number:	1		Location:	Carlsbad, NM
SHO Duty:	50.00	MMBTU/ hr	SHO Model:	SHO5000

Guarantees:

*Stabilizer Heaters

NOx	0.0267	Lb/MMBTU	20	ppm
SOx	no quote	Lb/MMBTU	-	ppm
CO	0.0163	Lb/MMBTU	20	ppm
VOC	0.0064	Lb/MMBTU	5	ppm
UHC	0.007	Lb/MMBTU	15	ppm
SPM	0.0134	Lb/MMBTU	15	ppm

		Design Case				Maximum Case			
Heat Release	LHV Basis	58.93	MMBTU/hr			64.83	MMBTU/hr		
Products of Combustion									
	MW								
O2	32.00	1,578	Lbm/ hr			1,778	Lbm/ hr		
N2 + Ar	28.15	40,581	Lbm/ hr			45,723	Lbm/ hr		
CO2	44.01	7,847	Lbm/ hr			8,841	Lbm/ hr		
H2O	18.02	5,817	Lbm/ hr			6,554	Lbm/ hr		
NOx	46.01	1.54	Lbm/ hr /	20	ppm	1.69	Lbm/ hr /	20	ppm
SOx	64.06	0.00	Lbm/ hr /	0	ppm	0.00	Lbm/ hr /	0	ppm
CO	28.01	0.94	Lbm/ hr /	20	ppm	1.03	Lbm/ hr /	20	ppm
VOC	44.10	0.37	Lbm/ hr /	5	ppm	0.41	Lbm/ hr /	5	ppm
UHC	16.04	0.40	Lbm/ hr /	15	ppm	0.44	Lbm/ hr /	15	ppm
SPM		0.77	Lbm/ hr /	15	ppm	0.85	Lbm/ hr /	15	ppm
Total		55,827	Lbm/ hr			62,901	Lbm/ hr		
Flue Gas Exit Temp.		488	°F						
Flue Gas Exit Velocity		~~35.1~~	Ft/sec			38.6	Ft/sec		
Stack Height		~~32.6~~	ft			~~32.6~~	ft		
Stack ID		48	in			48	in		

NOTE:
THM emissions guarantees applicable between 50-100% of Design Case combustion conditions w/ 15% excess air.

THM emissions guarantees applicable for firebox temperatures above 1100 F.

Emissions above are for Design Case operation with air and fuel in ratio control. Upset conditions, such as operation outside the design, high turndown or start-up are not considered as guaranteed emissions cases.

The Maximum Case is the the specified heat release for the burner purchased. Extra duty is spec'd into the burner to ensure that the burner is never the limiting factor on duty.

revision	date	description	by	chk'd	appv'd

USA Applications
SHO = Superior Quality, Flexibility, Dependability & Modularity

EMISSIONS PERMIT DATA SHEET
AMERICAN ENGINEERING SYSTEM of UNITS

MJ18-346-Emissions-

This document contains confidential information proprietary to THM. This document shall not be used, reproduced or disclosed without the prior written consent of THM.

COMPONENT DESCRIPTION

ITEM	QTY	DESCRIPTION
1	1	CALLIDUS BURNER (ENHANCED IFGR ULTRA LOW NOX CUBL-16W-HC-HZ)
2	2	3/16" PL RADIANT SIDE WALLS - A36
3	1	3/16" PL RADIANT ROOF - A36
4	1	3/16" PL RADIANT FLOOR - A36
5	2	3/16" PL RADIANT END WALL - A36
6	2	3/16" PL CONVECTION SIDE WALL - A36
7	2	3/8" PL CONVECTION TUBE SHEETS - A36
8	2	10 GA. PL RETURN COVERS - A36
9	1	3/16" PL TRANSITION - A36
10	1	48" O.D. x 3/16" PL. STACK - A36
11	1	24" x 24" ACCESS DOOR @ RADIANT END WALL
12		NOT USED
13		LIFTING LUGS (STRAIGHT UP LIFT ONLY) - A36
14		5/8" GALV. HIGH STRENGTH BOLT w/ BEVEL WASHER & HEAVY HEX NUT - A325
15		5/8" GALV. HIGH STRENGTH BOLT w/ HARDENED WASHER & HEAVY HEX NUT - A325
16		5/8" GALV. MACHINE BOLT w/ FLAT WASHER & HEX NUT - A307
17A	1	1 1/2" - 3000# COUPLING & PLUG (CS) w/ 304SS PIPE SLEEVE - SPARE
17B	1	1 1/2" - 3000# COUPLING & PLUG (CS) w/ 304SS PIPE SLEEVE - FLUE GAS COMPOSITION
18A	1	1 1/2" - 3000# COUPLING & PLUG (CS) w/ 304SS PIPE SLEEVE - SPARE
18B	1	1 1/2" - 3000# COUPLING & PLUG (CS) w/ 304SS PIPE SLEEVE - SPARE
19A	1	1 1/2" - 3000# COUPLING & PLUG (CS) w/ 304SS PIPE SLEEVE - FURNACE PRESSURE
19B	1	1 1/2" - 3000# COUPLING & PLUG (CS) w/ 304SS PIPE SLEEVE - SPARE
20		NOT USED
21	1	3" - 300# RFWN FLG W/ BLIND (CS) w/ CS PIPE SLEEVE - 02 CONNECTION
22	1	1 1/2" - 3000# COUPLING & PLUG (CS) - SPARE
23	2	4" - 150# RFWN FLG w/ BLIND (CS) w/ CS PIPE SLEEVE - SAMPLE PORT
24	1	CROSSOVER SUPPORT - (C8x18.75 FIELD INSTALLED) (CS)
25		14 GA. FERRULES - 304SS (@ TUBE SHEET)
26		10 GA. FERRULES - C.S. (@ RETURN COVERS)
27		10 GA. FERRULES - 304SS (@ RADIANT SHELL)
28	1	4" SIGHT PORT w/ 304SS PIPE SLEEVE (@ RADIANT SHELL)
29	1	THM NAME PLATE (304SS)
30	8	FLEXIBLE TUBE SEALS (SOCK & CLAMP)
31		1/2" DIA. GALV MACHINE BOLT w/ FLAT WASHER & HEAVY HEX NUT - A307
32		3/4" GALV. HIGH STRENGTH BOLT w/ HARDENED WASHER & HEAVY HEX NUT - A325
33		OUTLET SUPPORT - (W6x15 FIELD INSTALLED) (CS)
34		COMBUSTION MODULE SKID 8500
35	300FT	2" DROP WARP GASKET 1/8"
36		HIGH TEMP RED RTV SILICONE
37	200FT	3/8" GLT375 FIBERGLASS ROPE 1/16" THK COMPRESSED

DRAWING LIST

GENERAL ARRANGEMENT, FOUNDATION, & COIL FABRICATION DRAWING LIST IS AS FOLLOWS:
PREFIX ALL DRAWINGS NUMBERS w/ JOB NUMBERS
DRAWING NO. - 1A - GENERAL ARRANGEMENT SIDE ELEVATION
DRAWING NO. - 1B - GENERAL ARRANGEMENT ELEV. BURNER & TARGET END
DRAWING NO. - 1C - GENERAL ARRANGEMENT PLAN VIEW
DRAWING NO. - 1D - REFRACTORY, PAINT, & INST. CONN'S
DRAWING NO. - 2A - ANCHOR BOLT PLAN & FOUNDATION LOADS
DRAWING NO. - 2C - PUMP SKID FOUNDATION & ANCHOR BOLT PLAN
DRAWING NO. - 4A - CONVECTION COIL, CROSSOVERS, & MANIFOLDS
DRAWING NO. - 4B - RADIANT COIL
DRAWING NO. - 1B - PUMP SKID GENERAL ARRANGEMENT
DRAWING NO. - 20 - SHOS 2330 PUMP SKID P&ID

NOTES:

1. FOR FIELD INSTALLATION SEE THM SUGGESTED ERECTION PROCEDURE FOR SHO HEATERS.
2. LIFTING LUGS DESIGNED FOR STRAIGHT UP LIFT.

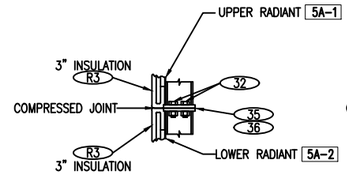

SECTION A-A
(TYP @ ALL VERTICAL COLUMNS)

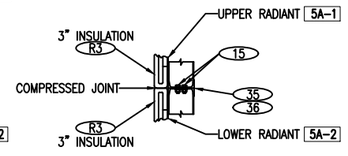

SECTION B-B

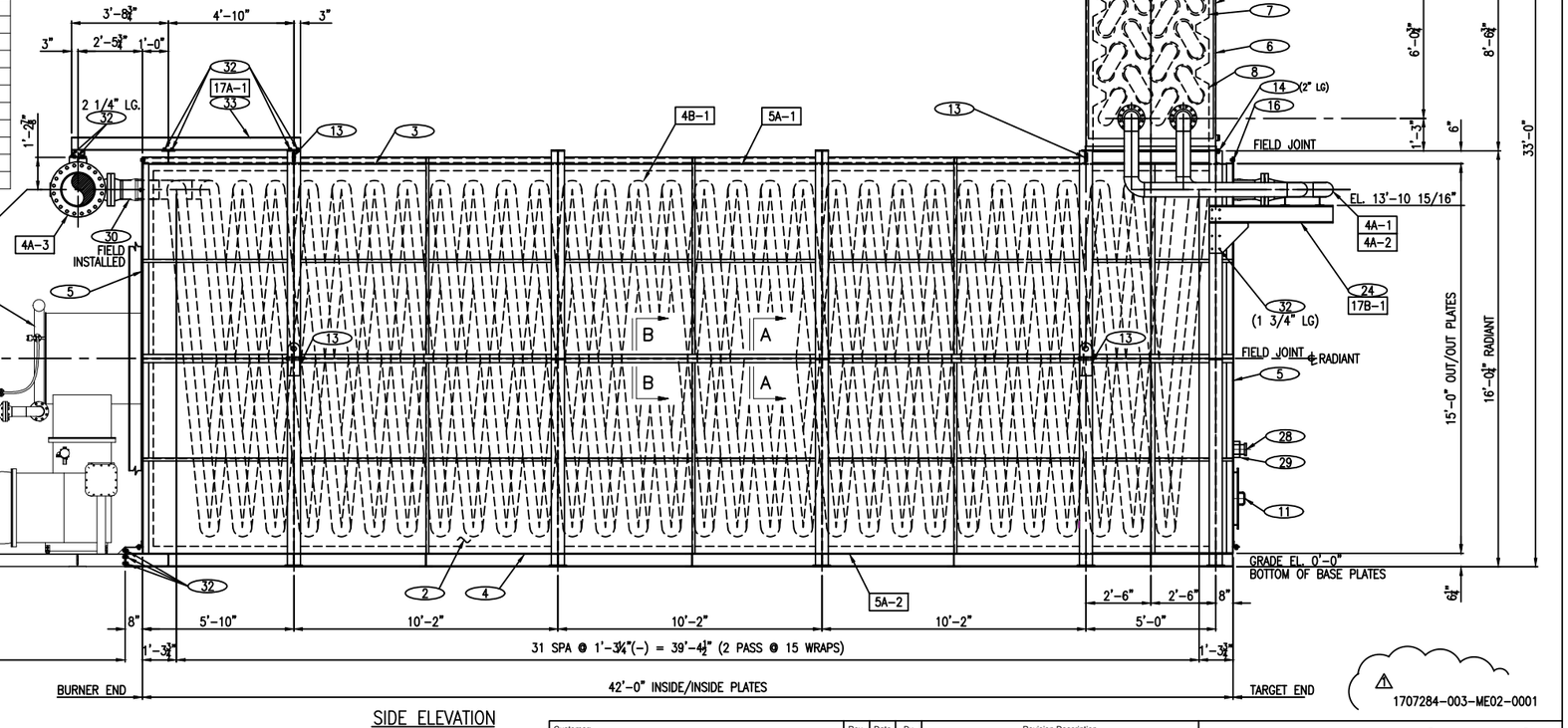

SIDE ELEVATION

PROPRIETARY INFORMATION

The information and designs shown herein, including all patented and patentable features are the property of, proprietary and confidential to TULSA HEATERS MIDSTREAM LLC.
This document shall not be reproduced in whole or part, or disclosed to any third party without the express written consent of TULSA HEATERS MIDSTREAM LLC. All copies of this document, printed or electronic, are null and void if modified or altered in any way.
Only TULSA HEATERS MIDSTREAM LLC possesses the controlling document in its original state and shall govern over any copy, printed or electronic.

Customer:
XTO ENERGY, INC
AUDUBON

LOCATION : CARLSBAD, NM
UNIT : COWBOY CDP
SERVICE : HOT OIL HEATER
EQUIPMENT No. : PK-6010
P.O. No. : 1707284-003
SHO : 5000

Rev.	Date	By	Revision Description
1	8/23	GP	ADDED CUST. DWG. NO., ADDED CMS DIM'S

THM TULSA HEATERS MIDSTREAM

Title: GENERAL ARRANGEMENT SIDE ELEV

Drawn By: JPW	Date: 7/14/18	Job No.: MJ18-346	
Checked By: ASW	Date: 7/15/18	Drawing No.: MJ18346-1A	Rev.: 1
Approved By	Certified By		

Owner:	XTO Energy		Owner Ref.:	PK-6110
Purchaser:	Audubon		Purchaser Ref.:	018193001
Manufacturer:	Tulsa Heaters Midstream		THM Ref.:	MJ18-349
Service:	Hot Oil Heater		Project:	Cowboy CDP
Number:	1		Location:	Carlsbad, NM
SHO Duty:	79.30	MMBTU/ hr	SHO Model:	SHO5000

Guarantees:

NOx	0.0334	Lb/MMBTU	25	ppm
SOx	no quote	Lb/MMBTU	-	ppm
CO	0.0163	Lb/MMBTU	20	ppm
VOC	0.0064	Lb/MMBTU	5	ppm
UHC	0.007	Lb/MMBTU	15	ppm
SPM	0.013	Lb/MMBTU	15	ppm

		Design Case				Maximum Case			
Heat Release	LHV Basis	94.54	MMBTU/hr			103.99	MMBTU/hr		
Products of Combustion									
	MW								
O2	32.00	2,657	Lbm/ hr			2,923	Lbm/ hr		
N2 + Ar	28.15	66,978	Lbm/ hr			73,676	Lbm/ hr		
CO2	44.01	12,059	Lbm/ hr			13,265	Lbm/ hr		
H2O	18.02	10,400	Lbm/ hr			11,440	Lbm/ hr		
NOx	46.01	3.16	Lbm/ hr /	25	ppm	3.47	Lbm/ hr /	25	ppm
SOx	64.06	0.00	Lbm/ hr /	0	ppm	0.00	Lbm/ hr /	0	ppm
CO	28.01	1.54	Lbm/ hr /	20	ppm	1.69	Lbm/ hr /	20	ppm
VOC	44.10	0.61	Lbm/ hr /	5	ppm	0.67	Lbm/ hr /	5	ppm
UHC	16.04	0.66	Lbm/ hr /	15	ppm	0.73	Lbm/ hr /	15	ppm
SPM		1.23	Lbm/ hr /	15	ppm	1.35	Lbm/ hr /	15	ppm
Total		92,101	Lbm/ hr			101,311	Lbm/ hr		
Flue Gas Exit Temp.		599	°F						
Flue Gas Exit Velocity		~~65.3~~	Ft/sec			71.8	Ft/sec		
Stack Height		~~34.3~~	ft			34.3	ft		
Stack ID		48	in			48	in		

NOTE:
THM emissions guarantees applicable between 50-100% of Design Case combustion conditions w/ 15% excess air.

THM emissions guarantees applicable for firebox temperatures above 1100 F.

Emissions above are for Design Case operation with air and fuel in ratio control. Upset conditions, such as operation outside the design, high turndown or start-up are not considered as guaranteed emissions cases.

The Maximum Case is the the specified heat release for the burner purchased. Extra duty is spec'd into the burner to ensure that the burner is never the limiting factor on duty.

revision	date	description	by	chk'd	appv'd

This document contains confidential information proprietary to THM. This document shall not be used, reproduced or disclosed without the prior written consent of THM.

COMPONENT DESCRIPTION

ITEM	QTY.	DESCRIPTION	ITEM	QTY.	DESCRIPTION	ITEM	QTY.	DESCRIPTION
1	3	CALLIDUS CUBL-(8W-HC BURNERS ⚠1)	15		3/4" HIGH STRENGTH BOLT w/ HVY HEX NUT – A325	29		PL 3/16" FERRULE – A36
2	2	5" DIA. OBSERVATION PORT PER ES-5-0P-5	16		5/8" HIGH STRENGTH BOLT w/ HEX NUT – A325	30		PL 3/16" FERRULE – 310SS
3	4	5"x9" OBSERVATION DOOR w/ GLASS (FABRICATED) PER ES-5-0G-1	17		PL 3/16" BURNER PLENUM DUCT – A36	31		10 GA FERRULE – 304SS
4	2	24"x24" BOLTED ACCESS DOOR / TUBE PULLING DOOR	18		1/2" HIGH STRENGTH BOLT w/ HEX NUT – A325	32	18	FLEXIBLE SEAL (SOCK & CLAMP) – FIELD INSTALL
5	1	18"x24" BOLTED ACCESS DOOR	19	4	1 1/2" NPS 3000# COUPLING & PLUG (CS) w/ 304SS PIPE SLEEVE – TEMPERATURE CONN.	33	3	FABRIC TYPE EXPANSION JOINT 4" F/F
6		PL 1/4" (MIN) STACK – A36	20	4	1 1/2" NPS 3000# COUPLING & PLUG (CS) w/ 304SS PIPE SLEEVE– FLUE GAS SAMPLE CONN.	34	30	3" SCH 40 PIPE TOE X 9 1/4" LG w/ CAP (A106GRB/A105)
7	2	FORCED DRAFT (F.D.) FAN (HP=125; VOLTAGE 460 3 PHASE 60 HZ.) ⚠1	21	5	1 1/2" NPS 3000# COUPLING & PLUG (CS) w/ 304SS PIPE SLEEVE – DRAFT GAUGE CONN.	35	2	3/4" NPS 3000# COUPLING & PLUG (CS) – RTD CONN.
8		PL 3/16" CONVECTION SIDE WALLS – A36	22	1	3" – 150# RFWN FLG & BLIND (CS) w/ 304SS PIPE SLEEVE – O2 ANALYZER	36	1	PL. 3/16" SUCTION STACK w/RAINHOOD & SILENCER MODEL 46-TA-5A (A36)
9		PL 1/2" TUBESHEETS – A36	23	2	4" – 150# RFWN FLG & BLIND (CS) w/ 304SS PIPE SLEEVE – EPA CONNECTION	37	⚠1 2	FD FAN DAMPERS (12"F/F)–FLEXTECH)
10		PL 1/4" ROOF – A36	24	2	1 1/2" 150# RFWN FLG. & BLIND (CS) w/ 304SS PIPE SLEEVE – PURGE CONN.	38	2	PL. 3/8" GROUNDING LUGS–CS
11		PL 1/4" (MIN) RADIANT SHELL – A36	25	1	THI NAME PLATE – 304SS	39		(NOT USED)
12		PL 1/4" FLOOR – A36	26	30	2" SCH. 40 PIPE SLEEVE x 9 1/4" LG – 310SS	40	2	FABRIC TYPE EXPANSION JOINT 6" F/F
13		PL 3/16" RETURN COVERS – A36	27	1	CENTER FLOOR SUPPORT – (A106)	41		(NOT USED)
14		LIFTING LUGS (STRAIGHT UP LIFT ONLY) – A36	28		PL 1/4" CORBEL BAR – A36	42		(NOT USED)

TUBE SUPPORT BILL of MATERIAL

DWG REV	MARK	QTY	PATTERN No.	REV No.	NEW PATTERN	EXIST PATTERN	MATERIAL
⚠1	A	24	THI ES-13-VT5.5-2	1	NO	YES	A351-HK40
	B	6/6	THI ES-13-VT5.5-6 (6A & 6B)	2	NO	YES	A351-HK40

STUDS, BOLTS & BAFFLES

REV	MARK	QTY	DESCRIPTION	MATERIAL
	S1	36	1" DIA. x 4 1/2" LG. STUDS w/ (2) HEX NUTS EACH	A193-B8M/A194-8M

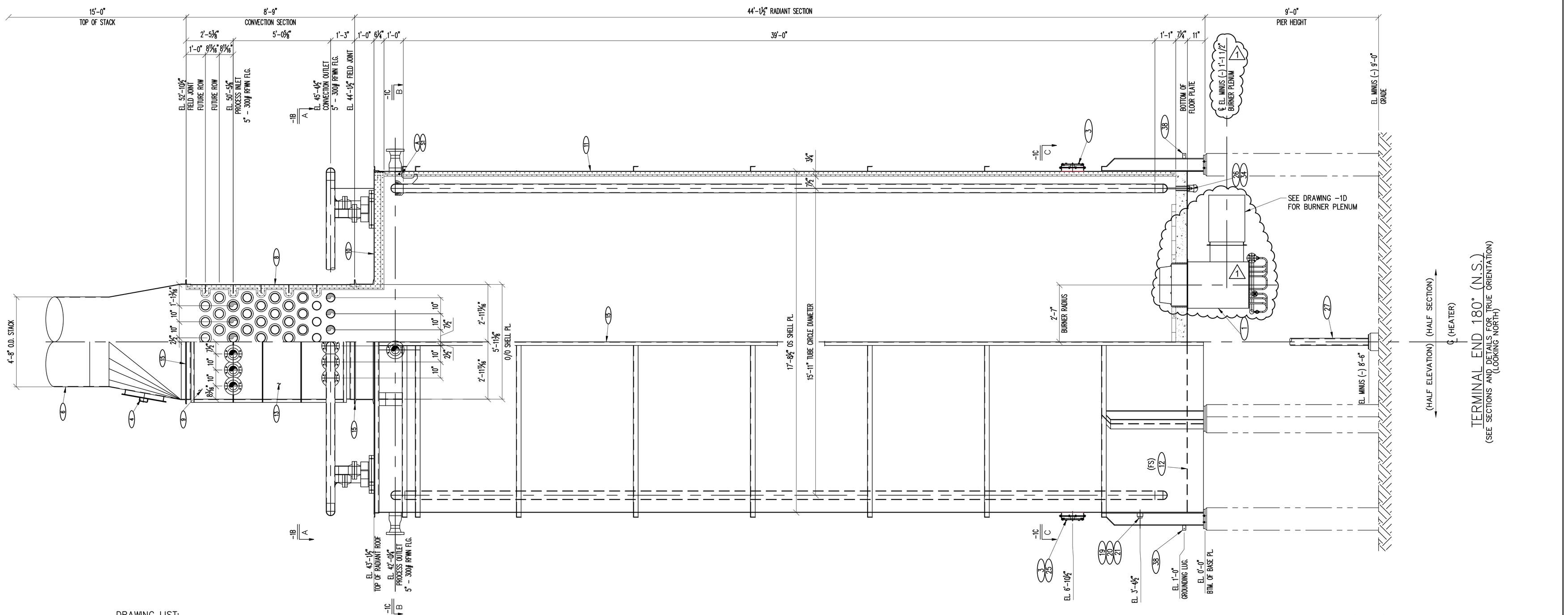

DRAWING LIST:

GENERAL ARRANGEMENT, FOUNDATION, & COIL FABRICATION DRAWING LIST IS AS FOLLOWS:
PREFIX ALL DRAWING NUMBERS w/ JOB NUMBERS
- DRAWING NO. – 1A–GENERAL ARRANGEMENT TERMINAL END ELEVATION
- DRAWING NO. – 1B–GENERAL ARRANGEMENT ELEVATIONS & SECTIONS
- DRAWING NO. – 1C–GENERAL ARRANGEMENT SECTIONS
- DRAWING NO. – 1D–GENERAL ARRANGEMENT SECTIONS
- DRAWING NO. – 1E–GENERAL ARRANGEMENT REFRACTORY, PAINT, & INST. CONN.'s
- DRAWING NO. – 1F–ELEVATION LADDERS AND PLATFORMS
- DRAWING NO. – 1G–PLAN VIEW LADDERS AND PLATFORMS
- DRAWING NO. – 2A–ANCHOR BOLT & FOUNDATION PLAN
- DRAWING NO. – 4A–CONVECTION COIL DETAILS
- DRAWING NO. – 4B–RADIANT COIL DETAILS
- DRAWING NO. – 4C–CROSS–OVER DETAILS

FOR FIELD INSTALLATION SEE THI SUGGESTED ERECTION PROCEDURE

⚠1 DOCUMENT NO. 1802759-002-ME02-0001
WORK THIS DRAWING w/ DRAWINGS –1B, 1C, 1D & –E

PROPRIETARY INFORMATION

The information and designs shown herein, including all patented and patentable features are the property of, proprietary and confidential to TULSA HEATERS, INC.. This document shall not be reproduced in whole or part, or disclosed to any third party without the express written consent of TULSA HEATERS, INC.. All copies of this document, printed or electronic, are null and void if modified or altered in any way. Only TULSA HEATERS, INC. possesses the controlling document in its original state and shall govern over any copy, printed or electronic.

Customer: AUDUBON / XTO ENERGY

LOCATION : CARLSBAD, NM
UNIT : CRYO UNIT
SERVICE : HOT OIL HEATER
EQUIPMENT No. : PK-6110
P.O. No. : 1802759-002

Rev.	Date	By	Revision Description
⚠1	8/9/18	MSM	CHANGED THE BURNER EL. AND VIEW.

TULSA HEATERS INC.

Title: GENERAL ARRANGEMENT TERMINAL END ELEVATION

Drawn By: SDC	Date: 6/15/18	Job No.: 18925	
Checked By: ASW	Date: 6/25/18	Drawing No.: 18925-1A	Rev.: 1
Approved By	Certified By		

Thermal Oxidizer

Manufacturer Data

• Burners
• Flares
• Incinerators
• Combustion Systems

22151 East 91st Street
Broken Arrow, OK 74014 USA
Phone: 918-258-8551
Fax: 918-251-5519
www.zeeco.com
sales@zeeco.com

December 20, 2018

Audubon Companies
10205 Westheimer Road, Suite 100
Houston, Texas 77042

Attention: Kelly Jones
KeJones@audubooncompanies.com

Reference: Audubon Companies **- XTO Energy Husky**
Zeeco Proposal No. 2018-08128IN-01-Rev 0

Kelly Jones:

Thank you for your inquiry. We appreciate this opportunity to provide our proposal for the following Zeeco equipment:

- Two (2) Identical Zeeco Specification Compliant, Vertical Thermal Oxidizer Package identical to XTO Cowboy Thermal Oxidizer procured on XTO's PO# 1802759-003.

The attached proposal describes specific features and performance of the Zeeco thermal oxidizer system. The thermal oxidizer is capable of achieving a ***minimum of 99.95*** percent H2S and VOC destruction efficiency.

Our design incorporates a proven thermal process to effectively treat the waste gas from your process. The design and construction materials have been chosen to maximize on-line time and operational life.

Again, we appreciate the opportunity to quote on your combustion equipment requirements. After you have had an opportunity to review our proposal, should you have any questions or require additional information, please contact me at (918)893-8416 or email me at sydney_levine@zeeco.com.

Best regards,

Sydney Levine
Applications Engineer

Reviewed by: TWD
Date: 19DEC2018

The flash gas and acid gas will be introduced as separate streams to the thermal oxidizer. The flash gas will be introduced through the burner, near the fuel gas tip. The acid gas will be introduced outside of the flame envelope. This will result in more stable operation, less system upsets, and better online performance. It is also assumed that the flash gas and acid gas will be flowing to the thermal oxidizer continuously, there will never be flash gas without acid gas, and vice versa.

4.3 Utilities

Electrical Power	460V / 3 Phase / 60 Hz
Instrument Air, SCFH	2000 to 4000
Fuel Gas Required at normal operation	15.4 MMBtu/hr

4.4 Flue Gas at 1600°F, Normal Operation (10% margin on waste gas flowrate included)

	Normal Case
COMPONENT:	**Mol%**
CO_2	38.79
H_2O	14.99
N_2	43.19
SO_2	0.00
O_2	3.02
TOTAL, mol/hr	**1491.44**
Mol. Weight	32.8

4.5 System Performance

Base Offer:

Stack Emission	**Expected Performance**
Destruction Efficiency	> 99.95% of all H2S / VOC
NOx, ppm_{vd} @ 3% O2	50
CO, ppm_{vd} @ 3% O2	50

With Option C for Ultra-Low NOx Burner Option:

Stack Emission	**Expected Performance**
Destruction Efficiency	**> 99.5% of all H2S / VOC**
NOx, ppm_{vd} @ 3% O2	**30**
CO, ppm_{vd} @ 3% O2	**50**

These values are understood to apply only when the system is operated in accordance with the operating conditions stipulated in the design summary and for the waste stipulated in the design basis sections of this proposal. VOCs are defined as non-methane and non-ethane hydrocarbons.

– DESIGN DATA –

DESIGN CODE:	ASME STS–1–2011
DESIGN PRESSURE INTERNAL	0 PSI @ 650°F
HYDRO TEST	NONE
MAWP	5 PSI @ 650°F
MDMT	–20°F
PWHT	NO
LETHAL SERVICE:	NO
SEISMIC CODE PER ASCE 7–10	SITE CLASS = C, IMP FACTOR = 1.25, Ss = 0.24%, S1 = 0.05%, R = 3
WIND CODE PER ASCE 7–10	WIND SPEED = 120 MPH, EXP. = C, IMP FACTOR = 1.15
RADIOGRAPH	SHELL: SPOT, SHELL CIRC.: SPOT, SHELL LONG.: SPOT
JOINT EFFICIENCY	SHELL: 0.85, SHELL CIRC.: 0.85, SHELL LONG.: 0.85
ALLOWABLE CORROSION:	1/8"
ESTIMATED STEEL FABRICATION WT.	20,375 LB.
ESTIMATED TEST WEIGHT	N/A
ESTIMATED OPERATING/EMPTY WEIGHT	59,806 LB.
ESTIMATED CAPACITY	10,411 GAL.

– NOZZLE LEGEND –

ITEM	SERVICE	SIZE	RATING	TYPE	CODE	SCH/BORE	FLG. MAT'L.	NECK MAT'L.
N1	BURNER CONNECTION	36"	FAB.	FAB.	FABRICATED	---	A–36	---
N2A/B	SAMPLE PORTS w/ BLIND	4"	150#	RFWN	ASME B16.5	STD.	A–105	A–106–B
N3A/B	THERMOCOUPLE	1 1/2"	150#	RFWN	ASME B16.5	XH	A–105	A–106–B
N4	SPARE O_2 ANALYZER CONN. w/ BLIND	4"	150#	RFWN	ASME B16.5	STD.	A–105	A–106–B
N5A/B	SPARE CONNECTION	2"	---	M.N.P.T.	-------	STD.	----	A–106–B
N6	SIGHT PORT W/ BLAST GATE	4"	150#	RFWN	ASME B16.5	STD.	A–105	A–106–B
M1	MANWAY WITH DAVIT	30"	FAB.	FAB.	FABRICATED	.250"	A–36	A–36
C1	PURGE CONNECTION	3/4"	6000#	F.N.P.T.	-------	------	A–105	------
C2	PURGE CONNECTION	3/4"	6000#	F.N.P.T.	-------	------	A–105	------
C3	PURGE CONNECTION	3/4"	6000#	F.N.P.T.	-------	------	A–105	------

– GENERAL NOTES –

1. ONE UNIT REQUIRED. TAG NUMBER: TO–1801
2. ALL FABRICATION IN ACCORDANCE WITH ASME STS–1–2011.
3. FLANGE HOLES SHALL STRADDLE NORMAL VESSEL CENTERLINES UNLESS OTHERWISE NOTED.
4. FOR PAINT, SEE ZEECO DOCUMENT 35595–4030.
5. REFRACTORY IS TO BE FURNISHED AND SHOP INSTALLED BY ZEECO.
6. FOR REFRACTORY, REFRACTORY LEGEND AND REFRACTORY NOTES, SEE DRAWING 35595–R064A–001.
7. FOR LIFTING DIAGRAM, SEE DRAWING 35595–G064A–010.

– MATERIALS –

SHELL	A–36
NOZZLE CYLINDERS & PIPES	A–36 / A–106–B
FLANGE FORGINGS	A–105
STUD BOLTS/NUTS	A–193–B7 / A–194–2H ZINC PLATED
GASKETS	1/8" SERVICE SHEET GASKET
VESSEL SUPPORT COLUMNS	A–992
COUPLINGS	A–105
TAILING LUGS	A–36
LIFTING TRUNNIONS	A–36

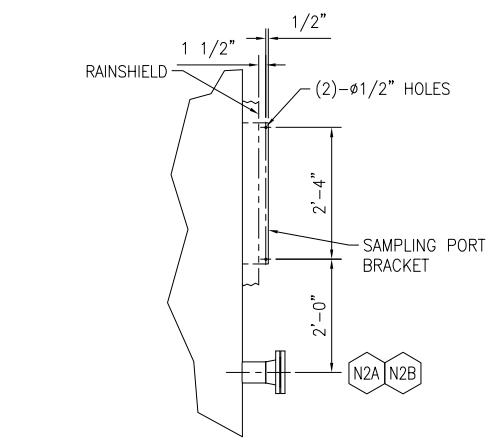

SAMPLING PORT BRACKET DETAIL

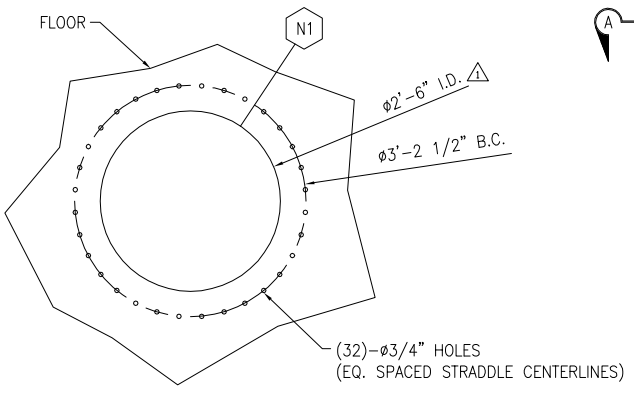

BURNER MOUNTING

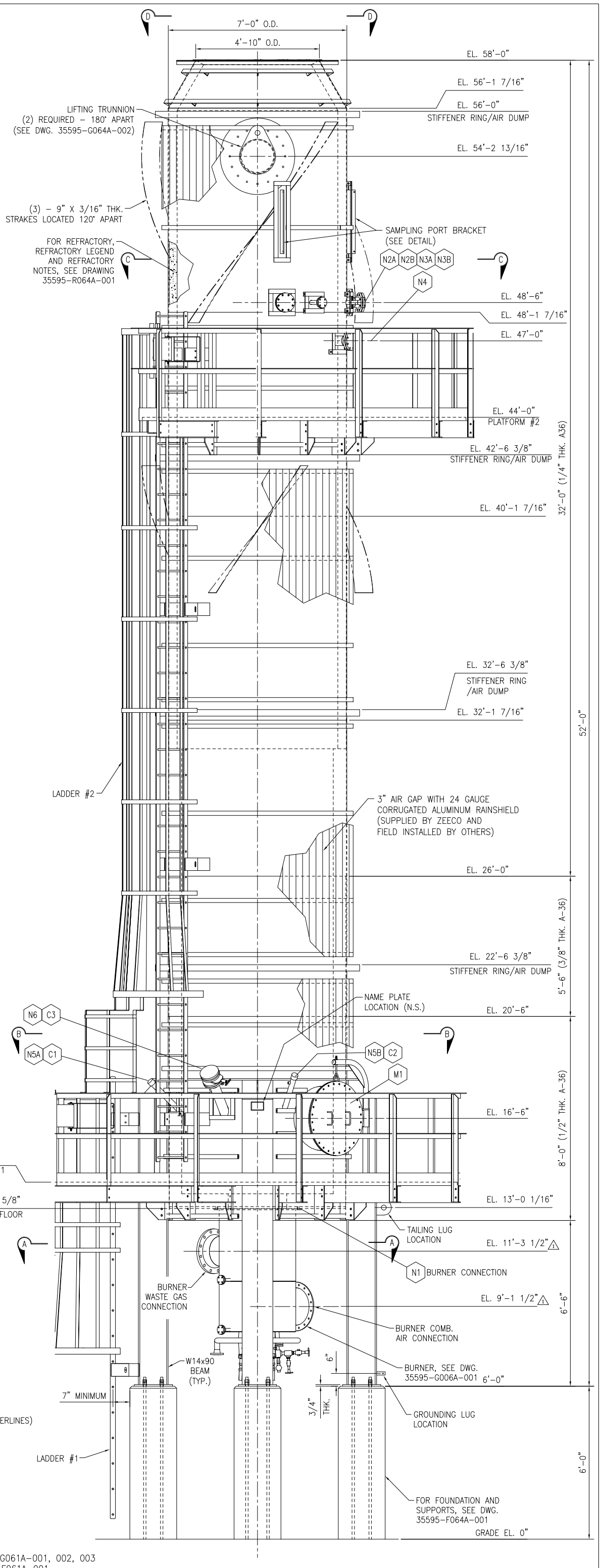

ELEVATION VIEW
(LOOKING NORTH)

REFERENCE DRAWINGS:

THERMAL OXIDIZER SYSTEM GENERAL ARRANGEMENT	35595–G061A–001, 002, 003
FOUNDATION PLAN THERMAL OXIDIZER SYSTEM	35595–F061A–001
THERMAL OXIDIZER FOUNDATION PLAN	35595–F064A–001
THERMAL OXIDIZER REFRACTORY DETAILS	35595–R064A–001

NO	DATE	REVISION DESCRIPTION	BY	CKD	APP.
2	31AUG18	REVISED AS NOTED	SAN	DAK	SAN
1	16JUL18	REVISED AS NOTED	ABG	JGH	SAN
0	12JUL18	ISSUED FOR APPROVAL	ABG	JGH	SAN

ZEECO, INC.
22151 EAST 91st STREET
BROKEN ARROW, OK 74014
PHONE: (918) 258–8551
FAX: (918) 251–5519
www.zeeco.com
sales@zeeco.com

PROPRIETARY DATA IS INCLUDED IN THE INFORMATION DISCLOSED HEREIN AND IS THE PROPERTY OF ZEECO,INC. IT MAY NOT BE USED IN CONNECTION WITH WORK DONE FOR ZEECO, INC. AND ALL RIGHTS OF DESIGN OR INVENTION DISCLOSED HEREIN ARE RESERVED. UNAUTHORIZED DISCLOSURE OR USE IS PROHIBITED BY LAW.

THERMAL OXIDIZER
GENERAL ARRANGEMENT

S.O. NO. TO–6980 1 | DWG., SUB. CAT. & SYSTEM NO. 35595 – G064A – 001 | REV. NO. 2

DRAWN	CHK	APP	DATE
ABG	JGH	SAN	12JUL18

SCALE NONE

CUSTOMER: XTO ENERGY, INC.
JOBSITE: COWBOY CDP, CARLSBAD, NEW MEXICO
END USER: AUDUBON COMPANIES
P.O. NO.: 1802759–003–ME02–0035 1

Flares

Manufacturer Data

• Burners
• Flares
• Incinerators
• Aftermarket Products and Services

22151 East 91st Street
Broken Arrow, OK 74014 USA
Ph: +1-918-258-8551
Fx: +1-918-251-5519
www.zeeco.com
sales@zeeco.com

December 21, 2018

Audobon Engineering
10205 Westheimer Road, Suite 100
Houston, Texas 77042

For
XTO Energy
Carlsbad, NM

Attention: Kelly Jones

Subject: Audobon Engineering Ref.: 019141001-AE-RFQ-ME0017
Zeeco Reference: 2018-08433FL-01 -- Rev. 0

This letter is to confirm that the above referenced flare systems supplied by Zeeco will provide a minimum VOC destruction efficiency of 98% when operated and maintained per the operating instructions and industry standards for this type of equipment.

If you would like to discuss this matter further, please feel free to call me.

Best Regards,



Kirsten Berg
Flare Application Engineer
Direct: +1 918-893-8628
kirsten_berg@zeeeco.com

Self-supported Flare Stack Specification Sheet

Client:	Audobon Engineering	Zeeco Ref.:	2018-08433FL-01	Date:	11-Jan-19
Location:	Carlsbad, NM	Client Ref.:	019141001-AE-RFQ-ME00	Rev.:	1

General Information:

Tag No.:	STK-1
	Stabilizer
Overall Height:	170'- 0 "

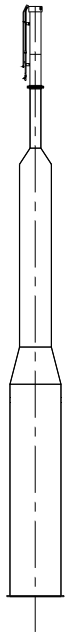

(Typical drawing only)

Design Criteria:

Wind Design Code:	ASCE 7-10	
Seismic Design Code:	ASCE 7-10	
Importance Factor:	1.25	
Structural Design Code:	AISC	
Wind Speed (Structural):	120	mph
Seismic Zone:	0	
HP Min./Max. Design Temp:	-50 / 96	Deg. F
LP Min./Max. Design Temp:	25 / 96	Deg. F
Air Riser Design Temp:	Ambient	
HP / LP Design Pressure:	50	psig
Air Riser Design Pressure:	Ambient	
Riser Corrosion Allow.:	0.000	in.

Construction:

HP Riser Material:	Carbon Steel	Ladders & Step-offs:	None
LP Riser Material:	Carbon Steel	Platform at Tip:	None
Air Riser Material:	Carbon Steel	Additional Platforms:	None
HP Riser Diameter:	16"	ACWL:	None
LP Riser Diameter:	14"		
Air Riser Diameter:	54"		

Surface Finish (Carbon Steel Surfaces):

Surface Preparation:	SSPC-SP-6	Primer:	Inorganic Zinc
		Finish Paint:	Per Specification

Utility Piping:

Per Attached Utility Piping Scope of Supply

Miscellaneous Notes:

1. Stabilizer and Cryo flare are identical except for HP Flare Riser Material.

Confidential and Proprietary

Combustor

Manufacturer Data

• Burners
• Flares
• Incinerators
• Aftermarket Products and Services

22151 East 91st Street
Broken Arrow, OK 74014 USA
Ph: +1-918-258-8551
Fx: +1-918-251-5519
www.zeeco.com
sales@zeeco.com

General Process Performance Warranty for Flare System

Zeeco Inc. warrants the process performance of this unit will meet or exceed the contract requirements. Specific process performance requirements and acceptance criteria will be defined and mutually agreed to by both parties within two (2) months of receipt of the purchase order for supply of the equipment. Performance of the system is to be defined under normal ambient conditions of temperature, wind, etc. Such performance acceptance criteria in general to be as follows:

Based on provided Datasheet 019141001-AE-DS-ME0018 and Agreed Flow Rates:

1) Hydrocarbon Destruction efficiency of the unit will be 99% or higher when operated and maintained per the operating instructions and industry standards for this type of equipment.
2) The expected NOx and CO emissions will be 124 ppm and 204 ppm (corrected to 3% O2), +/- 10%, using calibrated measurement equipment under defined flow conditions at the specified gas composition in the contract and when operated and maintained per the operating instructions and industry standards for this type of equipment.. The specific operating temperature required to meet all three conditions will be determined upon field testing of the equipment.

Process performance of the system, if required, will be confirmed at a performance test to take place within 90 days after the unit is fully assembled and erected at site. The cost for Zeeco Inc. personnel to be on site for any testing is at the expense of the customer. The cost for testing equipment would also be to the account of the customer, if not readily available in the process system as installed. The specific conditions of the performance test, and the measurement and acceptance criteria for the above process performance points, including specific liability points associated with each process item, are to be mutually agreed to by both buyer and seller prior to shipment of the equipment. Successful completion of the process performance test at site will be deemed as compliance with the process performance warranty for any and all reasons. In the event the site performance test is postponed or delayed for more than 90 days after completion of erection of the unit at site, prior to the test, Zeeco Inc. will inspect the unit and any required refurbishment / repair to like new condition must be completed prior to testing, at purchaser's sole expense. If the testing is not completed within 6 months of the startup of the unit, the unit will have been deemed to have met any and all performance requirements.

Enclosed Flare Stack Specification Sheet

Client:	Audobon Engineering	Zeeco Ref.: 2018-02438FL-01		Date:	22-May-18
Location:	Carlsbad, NM	Client Ref.: 018193001-AE-RFQ		Rev.	1

General Information:

Tag No.:	EGF-1
Overall Height:	40 ft
Model No.	EF-9/40

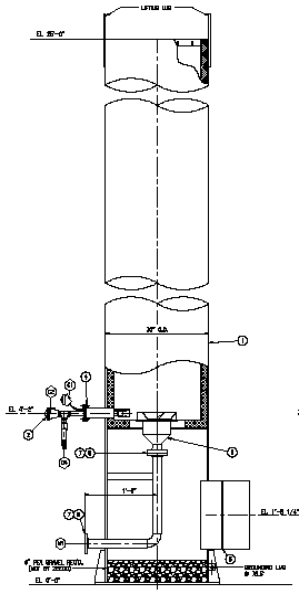

(Typical drawing only)

Design Criteria:

Wind Design Code:	ASCE 7-10	
Seismic Design Code:	ASCE 7-10	
Importance Factor:	1.25	
Structural Design Code:	AISC	
Wind Speed (Structural):	120	mph
Seismic Zone:	0	
Max. Design Temperature:	300	Deg. F
Min. Design Temperature:	20	Deg. F
Design Pressure:	Atmospheric	
Stack Corrosion Allow.:	0.000	in.

Construction:

Stack Material:	Carbon Steel	Ladders & Step-offs:	None
Stack Height (approx.)	40 ft	Platform at tip:	None
Stack Width (approx.):	9 ft	Additional Platforms:	None
Flare Gas Inlet Diameter:	8 in		

Surface Preparation:	SSPC-SP-6	Primer:	Inorganic Zinc
		Finish Paint:	Per Specification

Utility piping:

Per Attached Utility Piping Scope of Supply

Miscellaneous Notes:

Confidential and Proprietary

Generators

Manufacturer Data

G3520H

GENSET - WITHOUT RADIATOR

GAS ENGINE SITE SPECIFIC TECHNICAL DATA
Audubon - XTO Husky

CATERPILLAR®

ENGINE SPEED (rpm):	1500	RATING STRATEGY:	HUMIDITY/FUEL TOLERANT
COMPRESSION RATIO:	11.1	RATING LEVEL:	CONTINUOUS
AFTERCOOLER TYPE:	SCAC	FUEL SYSTEM:	CAT LOW PRESSURE WITH AIR FUEL RATIO CONTROL
AFTERCOOLER - STAGE 2 INLET (°F):	130		
AFTERCOOLER - STAGE 1 INLET (°F):	192	**SITE CONDITIONS:**	
JACKET WATER OUTLET (°F):	210	FUEL:	Audubon Huskt - Rich GAS
ASPIRATION:	TA	FUEL PRESSURE RANGE(psig): (See note 1)	2.0-5.0
COOLING SYSTEM:	JW+OC+1AC, 2AC+GB	FUEL METHANE NUMBER:	57.3
CONTROL SYSTEM:	ADEM4 W/ IM	FUEL LHV (Btu/scf):	1187
EXHAUST MANIFOLD:	DRY	ALTITUDE(ft):	3150
COMBUSTION:	LOW EMISSION	INLET AIR TEMPERATURE(°F):	97
NOx EMISSION LEVEL (g/bhp-hr NOx):	1.0	STANDARD RATED POWER:	3448 bhp@1500rpm
ANCILLARY LOAD (ekW):	60	POWER FACTOR:	1.0
SET POINT TIMING:	16	VOLTAGE(V):	4160-13800

				MAXIMUM RATING	SITE RATING AT MAXIMUM INLET AIR TEMPERATURE		
RATING		**NOTES**	**LOAD**	**100%**	**100%**	**75%**	**57%**
GENSET POWER	(WITH ANCILLARY LOAD, WITH GEARBOX)	(2)(3)	ekW	2048	2048	1536	1159
GENSET POWER	(WITH ANCILLARY LOAD, WITH GEARBOX)	(2)(3)	kVA	2048	2048	1536	1159
ENGINE POWER	(WITHOUT GEARBOX, WITHOUT FAN)	(3)	bhp	2932	2932	2232	1714
INLET AIR TEMPERATURE			°F	97	97	97	97
GENERATOR EFFICIENCY		(2)	%	97.2	97.2	96.7	96.1
GENSET EFFICIENCY	(ISO 3046/1)	(4)(5)	%	41.6	41.6	40.1	38.1
THERMAL EFFICIENCY		(4)(6)	%	43.0	43.0	44.4	46.4
TOTAL EFFICIENCY		(4)(7)	%	84.6	84.6	84.5	84.5
ENGINE DATA							
GENSET FUEL CONSUMPTION	(ISO 3046/1)	(8)	Btu/ekW-hr	8209	8209	8511	8963
GENSET FUEL CONSUMPTION	(NOMINAL)	(8)	Btu/ekW-hr	8492	8492	8805	9272
ENGINE FUEL CONSUMPTION	(NOMINAL)	(8)	Btu/bhp-hr	5932	5932	6061	6269
AIR FLOW (@inlet air temp, 14.7 psia)	(WET)	(9)	ft3/min	5482	5482	4123	3138
AIR FLOW	(WET)	(9)	lb/hr	23435	23435	17623	13414
FUEL FLOW (60ºF, 14.7 psia)			scfm	244	244	190	151
INLET MANIFOLD PRESSURE		(10)	in Hg(abs)	114.9	114.9	87.8	68.3
EXHAUST TEMPERATURE - ENGINE OUTLET		(11)	°F	815	815	873	949
EXHAUST GAS FLOW (@engine outlet temp, 14.5 psia)	(WET)	(12)	ft3/min	13455	13455	10601	8550
EXHAUST GAS MASS FLOW	(WET)	(12)	lb/hr	24284	24284	18283	13939
MAX INLET RESTRICTION		(13)	in H2O	14.53	14.53	10.30	8.22
MAX EXHAUST RESTRICTION		(13)	in H2O	20.15	20.15	11.73	7.33
EMISSIONS DATA - ENGINE OUT							
NOx (as NO2)		(14)(15)	g/bhp-hr	1.00	1.00	1.00	1.00
CO		(14)(15)	g/bhp-hr	1.68	1.68	1.59	1.61
THC (mol. wt. of 15.84)		(14)(15)	g/bhp-hr	1.44	1.44	1.52	1.46
NMHC (mol. wt. of 15.84)		(14)(15)	g/bhp-hr	0.70	0.70	0.74	0.71
NMNEHC (VOCs) (mol. wt. of 15.84)		(14)(15)(16)	g/bhp-hr	0.37	0.37	0.39	0.38
HCHO (Formaldehyde)		(14)(15)	g/bhp-hr	0.25	0.25	0.24	0.24
CO2		(14)(15)	g/bhp-hr	413	413	472	462
EXHAUST OXYGEN		(14)(17)	% DRY	9.2	9.2	8.9	8.5
HEAT REJECTION							
LHV INPUT		(18)	Btu/min	289909	289909	225441	179057
HEAT REJ. TO JACKET WATER (JW)		(19)	Btu/min	31352	31352	26115	23490
HEAT REJ. TO ATMOSPHERE	(INCLUDES GENERATOR)	(19)	Btu/min	9164	9164	7586	6549
HEAT REJ. TO LUBE OIL (OC)		(19)	Btu/min	12096	12096	10912	9874
HEAT REJECTION TO EXHAUST (LHV TO 248°F)		(19)	Btu/min	61340	61340	51221	44098
HEAT REJ. TO A/C - STAGE 1 (1AC)		(19)(21)	Btu/min	21172	21172	12661	6480
HEAT REJ. TO A/C - STAGE 2 (2AC)		(19)(21)	Btu/min	12748	12748	9150	6105
HEAT REJECTION FROM GEARBOX (GB)		(19)	Btu/min	982	982	748	574
PUMP POWER		(20)	Btu/min	859	859	859	859

COOLING SYSTEM SIZING CRITERIA				
TOTAL JACKET WATER CIRCUIT (JW+OC+1AC)	(22)	Btu/min	77417	77417
TOTAL STAGE 2 AFTERCOOLER CIRCUIT (2AC+GB)	(22)	Btu/min	16210	16210
HEAT REJECTION TO EXHAUST (LHV TO 248°F)	(22)	Btu/min	67474	67474
A cooling system safety factor of 0% has been added to the cooling system sizing criteria.				

MINIMUM HEAT RECOVERY				
TOTAL JACKET WATER CIRCUIT (JW+OC+1AC)	(23)	Btu/min	58007	58007
TOTAL STAGE 2 AFTERCOOLER CIRCUIT (2AC+GB)	(23)	Btu/min	13044	13044
HEAT REJECTION TO EXHAUST(LHV TO 248°F)	(23)	Btu/min	48048	48048

CONDITIONS AND DEFINITIONS

Engine rating obtained and presented in accordance with ISO 3046/1, adjusted for fuel, site altitude and site inlet air temperature. 100% rating at maximum inlet air temperature is the maximum engine capability for the specified fuel at site altitude and maximum site inlet air temperature. Maximum rating is the maximum capability at the specified aftercooler inlet temperature for the specified fuel at site altitude and reduced inlet air temperature. Lowest load point is the lowest continuous duty operating load allowed. No overload permitted at rating shown.

For notes information consult page three.

PREPARED BY: Donny Corley, Mustang CAT
Data generated by Gas Engine Rating Pro Version 6.09.02
Ref. Data Set EM3735-00-001, Printed 25Feb2019

Engine Power vs. Inlet Air Temperature

Data represents temperature sweep at 3150 ft and 1500 rpm

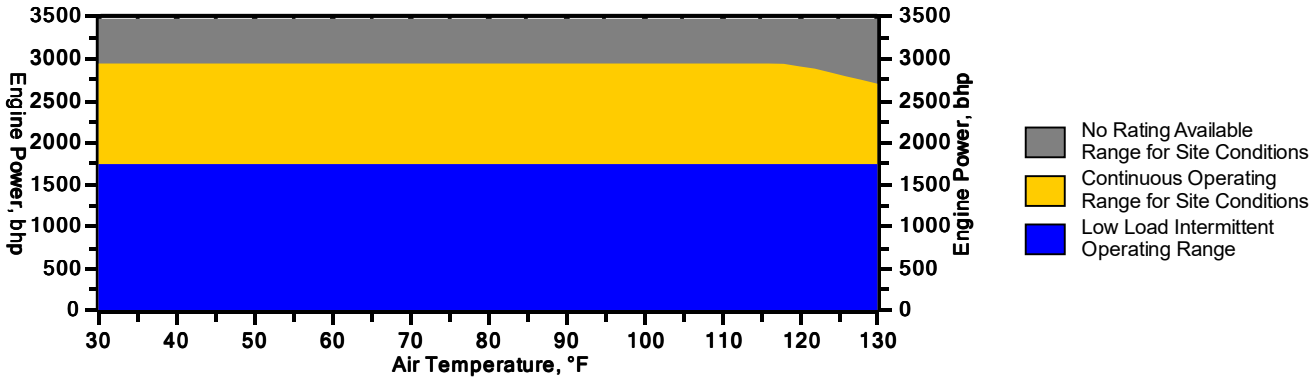

NOTES

1. Fuel pressure range specified is to the engine fuel control valve. Additional fuel train components should be considered in pressure and flow calculations.

2. Generator efficiencies, power factor, and voltage are based on standard generator. [Genset Power (ekW) is calculated as: ((Engine Power (bkW) - Gearbox Power (bkW)) x Generator Efficiency) - Ancillary Load (ekW)], [Genset Power (kVA) is calculated as: (((Engine Power (bkW) - Gearbox Power (bkW)) x Generator Efficiency) - Ancillary Load (ekW)) / Power Factor]

3. Rating is with two engine driven water pumps. Tolerance is (+)3, (-)0% of full load. All derates are applied without pumps , then pump power is subtracted to obtain final rating.

4. Efficiency represents a Closed Crankcase Ventilation (CCV) system installed on the engine.

5. Genset Effieciency published in accordance with ISO 3046/1.

6. Thermal Efficiency is calculated based on energy recovery from the jacket water, lube oil, 1st stage aftercooler, and exhaust to 248ºF with engine operation at ISO 3046/1 Genset Efficiency, and assumes unburned fuel is converted in an oxidation catalyst.

7. Total efficiency is calculated as: Genset Efficiency + Thermal Efficiency. Tolerance is ±10% of full load data.

8. ISO 3046/1 Genset fuel consumption tolerance is (+)5, (-)0% at the specified power factor. Nominal genset and engine fuel consumption tolerance is ± 1.5% of full load data at the specified power factor.

9. Air flow value is on a 'wet' basis. Flow is a nominal value with a tolerance of ± 5 %.

10. Inlet manifold pressure is a nominal value with a tolerance of ± 5 %.

11. Exhaust temperature is a nominal value with a tolerance of (+)63°F, (-)54°F.

12. Exhaust flow value is on a "wet" basis. Flow is a nominal value with a tolerance of ± 6 %.

13. Inlet and Exhaust Restrictions are maximum allowed values at the corresponding loads. Increasing restrictions beyond what is specified will result in a significant engine derate.

14. Emissions data is at engine exhaust flange prior to any after treatment.

15. NOx tolerance's are ± 18% of specified value. All other emission values listed are higher than nominal levels to allow for instrumentation, measurement, and engine-to-engine variations. They indicate the maximum values expected under steady state conditions. Fuel methane number cannot vary more than ± 3. THC, NMHC, and NMNEHC do not include aldehydes

16. VOCs - Volatile organic compounds as defined in US EPA 40 CFR 60, subpart JJJJ

17. Exhaust Oxygen level is the result of adjusting the engine to operate at the specified NOx level. Tolerance is ± 0.5.

18. LHV rate tolerance is ± 1.5%.

19. Heat rejection values are representative of site conditions. Tolerances, based on treated water, are ± 10% for jacket water circuit, ± 50% for atmosphere, ± 20% for lube oil circuit, ± 10% for exhaust, ± 5% for aftercooler circuit, and ± 5% for Gearbox.

20. Pump power includes engine driven jacket water and aftercooler water pumps. Engine brake power includes effects of pump power.

21. Aftercooler heat rejection is nominal for site conditions and does not include an aftercooler heat rejection factor. Aftercooler heat rejection values at part load are for reference only.

22. Cooling system sizing criteria represent the expected maximum circuit heat rejection for the ratings at site, with applied plus tolerances. Total circuit heat rejection is calculated using formulas referenced in the notes on the standard tech data sheet with the following qualifications. Aftercooler heat rejection data (1AC & 2AC) is based on the standard rating. Jacket Water (JW), Oil Cooler (OC), and Gearbox (GB) heat rejection values are based on the respective site or maximum column. Aftercooler heat rejection factors (ACHRF) are specific for the site elevation and inlet air temperature specified in the site or maximum column, referenced from the table on the standard data sheet

23. Minimum heat recovery values represent the expected minimum heat recovery for the site, with applied minus tolerances. Do not use these values for cooling system sizing.

Constituent	Abbrev	Mole %	Norm
Water Vapor	H2O	0.0000	0.0000
Methane	CH4	71.2300	71.2942
Ethane	C2H6	16.0000	16.0144
Propane	C3H8	8.0000	8.0072
Isobutane	iso-C4H1O	0.8000	0.8007
Norbutane	nor-C4H1O	1.6800	1.6815
Isopentane	iso-C5H12	0.2200	0.2202
Norpentane	nor-C5H12	0.1800	0.1802
Hexane	C6H14	0.0000	0.0000
Heptane	C7H16	0.0000	0.0000
Nitrogen	N2	1.6200	1.6215
Carbon Dioxide	CO2	0.1800	0.1802
Hydrogen Sulfide	H2S	0.0000	0.0000
Carbon Monoxide	CO	0.0000	0.0000
Hydrogen	H2	0.0000	0.0000
Oxygen	O2	0.0000	0.0000
Helium	HE	0.0000	0.0000
Neopentane	neo-C5H12	0.0000	0.0000
Octane	C8H18	0.0000	0.0000
Nonane	C9H20	0.0000	0.0000
Ethylene	C2H4	0.0000	0.0000
Propylene	C3H6	0.0000	0.0000
TOTAL (Volume %)		99.9100	100.0000

Fuel Makeup:	Audubon Huskt - Rich
Unit of Measure:	English

Calculated Fuel Properties

Caterpillar Methane Number:	57.3
Lower Heating Value (Btu/scf):	1187
Higher Heating Value (Btu/scf):	1307
WOBBE Index (Btu/scf):	1360
THC: Free Inert Ratio:	54.5
Total % Inerts (% N2, CO2, He):	1.8%
RPC (%) (To 905 Btu/scf Fuel):	100%
Compressibility Factor:	0.996
Stoich A/F Ratio (Vol/Vol):	12.29
Stoich A/F Ratio (Mass/Mass):	16.15
Specific Gravity (Relative to Air):	0.761
Fuel Specific Heat Ratio (K):	1.274

CONDITIONS AND DEFINITIONS

Caterpillar Methane Number represents the knock resistance of a gaseous fuel. It should be used with the Caterpillar Fuel Usage Guide for the engine and rating to determine the rating for the fuel specified. A Fuel Usage Guide for each rating is included on page 2 of its standard technical data sheet.

RPC always applies to naturally aspirated (NA) engines, and turbocharged (TA or LE) engines only when they are derated for altitude and ambient site conditions.

Project specific technical data sheets generated by the Caterpillar Gas Engine Rating Pro program take the Caterpillar Methane Number and RPC into account when generating a site rating.

Fuel properties for Btu/scf calculations are at 60F and 14.696 psia.

Caterpillar shall have no liability in law or equity, for damages, consequently or otherwise, arising from use of program and related material or any part thereof.

FUEL LIQUIDS

Field gases, well head gases, and associated gases typically contain liquid water and heavy hydrocarbons entrained in the gas. To prevent detonation and severe damage to the engine, hydrocarbon liquids must not be allowed to enter the engine fuel system. To remove liquids, a liquid separator and coalescing filter are recommended, with an automatic drain and collection tank to prevent contamination of the ground in accordance with local codes and standards.

To avoid water condensation in the engine or fuel lines, limit the relative humidity of water in the fuel to 80% at the minimum fuel operating temperature.

External Combustion

AP-42 Section 1.4 - Heaters and Flare

TABLE 1.4-2. EMISSION FACTORS FOR CRITERIA POLLUTANTS AND GREENHOUSE GASES FROM NATURAL GAS COMBUSTION[a]

Pollutant	Emission Factor ($lb/10^6$ scf)	Emission Factor Rating
CO_2[b]	120,000	A
Lead	0.0005	D
N_2O (Uncontrolled)	2.2	E
N_2O (Controlled-low-NO_X burner)	0.64	E
PM (Total)[c]	7.6	D
PM (Condensable)[c]	5.7	D
PM (Filterable)[c]	1.9	B
SO_2[d]	0.6	A
TOC	11	B
Methane	2.3	B
VOC	5.5	C

[a] Reference 11. Units are in pounds of pollutant per million standard cubic feet of natural gas fired. Data are for all natural gas combustion sources. To convert from $lb/10^6$ scf to $kg/10^6$ m^3, multiply by 16. To convert from $lb/10^6$ scf to 1b/MMBtu, divide by 1,020. The emission factors in this table may be converted to other natural gas heating values by multiplying the given emission factor by the ratio of the specified heating value to this average heating value. TOC = Total Organic Compounds. VOC = Volatile Organic Compounds.

[b] Based on approximately 100% conversion of fuel carbon to CO_2. $CO_2[lb/10^6 scf] = (3.67) (CON) (C)(D)$, where CON = fractional conversion of fuel carbon to CO_2, C = carbon content of fuel by weight (0.76), and D = density of fuel, $4.2x10^4$ $lb/10^6$ scf.

[c] All PM (total, condensible, and filterable) is assumed to be less than 1.0 micrometer in diameter. Therefore, the PM emission factors presented here may be used to estimate PM_{10}, $PM_{2.5}$ or PM_1 emissions. Total PM is the sum of the filterable PM and condensible PM. Condensible PM is the particulate matter collected using EPA Method 202 (or equivalent). Filterable PM is the particulate matter collected on, or prior to, the filter of an EPA Method 5 (or equivalent) sampling train.

[d] Based on 100% conversion of fuel sulfur to SO_2. Assumes sulfur content is natural gas of 2,000 grains/10^6 scf. The SO_2 emission factor in this table can be converted to other natural gas sulfur contents by multiplying the SO_2 emission factor by the ratio of the site-specific sulfur content (grains/10^6 scf) to 2,000 grains/10^6 scf.

TABLE 1.4-3. EMISSION FACTORS FOR SPECIATED ORGANIC COMPOUNDS FROM NATURAL GAS COMBUSTION[a]

CAS No.	Pollutant	Emission Factor ($lb/10^6$ scf)	Emission Factor Rating
91-57-6	2-Methylnaphthalene[b, c]	2.4E-05	D
56-49-5	3-Methylchloranthrene[b, c]	<1.8E-06	E
	7,12-Dimethylbenz(a)anthracene[b,c]	<1.6E-05	E
83-32-9	Acenaphthene[b,c]	<1.8E-06	E
203-96-8	Acenaphthylene[b,c]	<1.8E-06	E
120-12-7	Anthracene[b,c]	<2.4E-06	E
56-55-3	Benz(a)anthracene[b,c]	<1.8E-06	E
71-43-2	Benzene[b]	2.1E-03	B
50-32-8	Benzo(a)pyrene[b,c]	<1.2E-06	E
205-99-2	Benzo(b)fluoranthene[b,c]	<1.8E-06	E
191-24-2	Benzo(g,h,i)perylene[b,c]	<1.2E-06	E
205-82-3	Benzo(k)fluoranthene[b,c]	<1.8E-06	E
106-97-8	Butane	2.1E+00	E
218-01-9	Chrysene[b,c]	<1.8E-06	E
53-70-3	Dibenzo(a,h)anthracene[b,c]	<1.2E-06	E
25321-22-6	Dichlorobenzene[b]	1.2E-03	E
74-84-0	Ethane	3.1E+00	E
206-44-0	Fluoranthene[b,c]	3.0E-06	E
86-73-7	Fluorene[b,c]	2.8E-06	E
50-00-0	Formaldehyde[b]	7.5E-02	B
110-54-3	Hexane[b]	1.8E+00	E
193-39-5	Indeno(1,2,3-cd)pyrene[b,c]	<1.8E-06	E
91-20-3	Naphthalene[b]	6.1E-04	E
109-66-0	Pentane	2.6E+00	E
85-01-8	Phenanathrene[b,c]	1.7E-05	D

TABLE 1.4-3. EMISSION FACTORS FOR SPECIATED ORGANIC COMPOUNDS FROM NATURAL GAS COMBUSTION (Continued)

CAS No.	Pollutant	Emission Factor ($lb/10^6$ scf)	Emission Factor Rating
74-98-6	Propane	1.6E+00	E
129-00-0	Pyrene[b, c]	5.0E-06	E
108-88-3	Toluene[b]	3.4E-03	C

[a] Reference 11. Units are in pounds of pollutant per million standard cubic feet of natural gas fired. Data are for all natural gas combustion sources. To convert from $lb/10^6$ scf to $kg/10^6$ m^3, multiply by 16. To convert from $1b/10^6$ scf to lb/MMBtu, divide by 1,020. Emission Factors preceeded with a less-than symbol are based on method detection limits.

[b] Hazardous Air Pollutant (HAP) as defined by Section 112(b) of the Clean Air Act.

[c] HAP because it is Polycyclic Organic Matter (POM). POM is a HAP as defined by Section 112(b) of the Clean Air Act.

[d] The sum of individual organic compounds may exceed the VOC and TOC emission factors due to differences in test methods and the availability of test data for each pollutant.

TABLE 1.4-4. EMISSION FACTORS FOR METALS FROM NATURAL GAS COMBUSTION[a]

CAS No.	Pollutant	Emission Factor ($lb/10^6$ scf)	Emission Factor Rating
7440-38-2	Arsenic[b]	2.0E-04	E
7440-39-3	Barium	4.4E-03	D
7440-41-7	Beryllium[b]	<1.2E-05	E
7440-43-9	Cadmium[b]	1.1E-03	D
7440-47-3	Chromium[b]	1.4E-03	D
7440-48-4	Cobalt[b]	8.4E-05	D
7440-50-8	Copper	8.5E-04	C
7439-96-5	Manganese[b]	3.8E-04	D
7439-97-6	Mercury[b]	2.6E-04	D
7439-98-7	Molybdenum	1.1E-03	D
7440-02-0	Nickel[b]	2.1E-03	C
7782-49-2	Selenium[b]	<2.4E-05	E
7440-62-2	Vanadium	2.3E-03	D
7440-66-6	Zinc	2.9E-02	E

[a] Reference 11. Units are in pounds of pollutant per million standard cubic feet of natural gas fired. Data are for all natural gas combustion sources. Emission factors preceeded by a less-than symbol are based on method detection limits. To convert from $lb/10^6$ scf to $kg/10^6$ m^3, multiply by l6. To convert from $lb/10^6$ scf to 1b/MMBtu, divide by 1,020.

[b] Hazardous Air Pollutant as defined by Section 112(b) of the Clean Air Act.

Stationary Gas Turbines

AP-42 Section 3.1

Table 3.1-3. EMISSION FACTORS FOR HAZARDOUS AIR POLLUTANTS FROM NATURAL GAS-FIRED STATIONARY GAS TURBINES[a]

Emission Factors[b] - Uncontrolled		
Pollutant	Emission Factor (lb/MMBtu)[c]	Emission Factor Rating
1,3-Butadiene[d]	< 4.3 E-07	D
Acetaldehyde	4.0 E-05	C
Acrolein	6.4 E-06	C
Benzene[e]	1.2 E-05	A
Ethylbenzene	3.2 E-05	C
Formaldehyde[f]	7.1 E-04	A
Naphthalene	1.3 E-06	C
PAH	2.2 E-06	C
Propylene Oxide[d]	< 2.9 E-05	D
Toluene	1.3 E-04	C
Xylenes	6.4 E-05	C

[a] SCC for natural gas-fired turbines include 2-01-002-01, 2-02-002-01, 2-02-002-03, 2-03-002-02, and 2-03-002-03. Hazardous Air Pollutants as defined in Section 112 (b) of the *Clean Air Act*.

[b] Factors are derived from units operating at high loads (≥ 80 percent load) only. For information on units operating at other loads, consult the background report for this chapter (Reference 16), available at "www.epa.gov/ttn/chief".

[c] Emission factors based on an average natural gas heating value (HHV) of 1020 Btu/scf at 60°F. To convert from (lb/MMBtu) to (lb/10^6 scf), multiply by 1020. These emission factors can be converted to other natural gas heating values by multiplying the given emission factor by the ratio of the specified heating value to this heating value.

[d] Compound was not detected. The presented emission value is based on one-half of the detection limit.

[e] Benzene with SCONOX catalyst is 9.1 E-07, rating of D.

[f] Formaldehyde with SCONOX catalyst is 2.0 E-05, rating of D.

Transportation of Petroleum Liquids

AP-42 Section 5.2 and

EPA Compendium on GHG Calculation Methodologies

loading operation, resulting in high levels of vapor generation and loss. If the turbulence is great enough, liquid droplets will be entrained in the vented vapors.

A second method of loading is submerged loading. Two types are the submerged fill pipe method and the bottom loading method. In the submerged fill pipe method, the fill pipe extends almost to the bottom of the cargo tank. In the bottom loading method, a permanent fill pipe is attached to the cargo tank bottom. During most of submerged loading by both methods, the fill pipe opening is below the liquid surface level. Liquid turbulence is controlled significantly during submerged loading, resulting in much lower vapor generation than encountered during splash loading.

The recent loading history of a cargo carrier is just as important a factor in loading losses as the method of loading. If the carrier has carried a nonvolatile liquid such as fuel oil, or has just been cleaned, it will contain vapor-free air. If it has just carried gasoline and has not been vented, the air in the carrier tank will contain volatile organic vapors, which will be expelled during the loading operation along with newly generated vapors.

Cargo carriers are sometimes designated to transport only one product, and in such cases are practicing "dedicated service". Dedicated gasoline cargo tanks return to a loading terminal containing air fully or partially saturated with vapor from the previous load. Cargo tanks may also be "switch loaded" with various products, so that a nonvolatile product being loaded may expel the vapors remaining from a previous load of a volatile product such as gasoline. These circumstances vary with the type of cargo tank and with the ownership of the carrier, the petroleum liquids being transported, geographic location, and season of the year.

One control measure for vapors displaced during liquid loading is called "vapor balance service", in which the cargo tank retrieves the vapors displaced during product unloading at bulk plants or service stations and transports the vapors back to the loading terminal. Figure 5.2-5 shows a tank truck in vapor balance service filling a service station underground tank and taking on displaced gasoline vapors for return to the terminal. A cargo tank returning to a bulk terminal in vapor balance service normally is saturated with organic vapors, and the presence of these vapors at the start of submerged loading of the tanker truck results in greater loading losses than encountered during nonvapor balance, or "normal", service. Vapor balance service is usually not practiced with marine vessels, although some vessels practice emission control by means of vapor transfer within their own cargo tanks during ballasting operations, discussed below.

Emissions from loading petroleum liquid can be estimated (with a probable error of ±30 percent)[4] using the following expression:

$$L_L = 12.46 \frac{SPM}{T} \qquad (1)$$

where:

L_L = loading loss, pounds per 1000 gallons ($lb/10^3$ gal) of liquid loaded

S = a saturation factor (see Table 5.2-1)
P = true vapor pressure of liquid loaded, pounds per square inch absolute (psia) (see Section 7.1, "Organic Liquid Storage Tanks")
M = molecular weight of vapors, pounds per pound-mole (lb/lb-mole) (see Section 7.1, "Organic Liquid Storage Tanks")
T = temperature of bulk liquid loaded, °R (°F + 460)

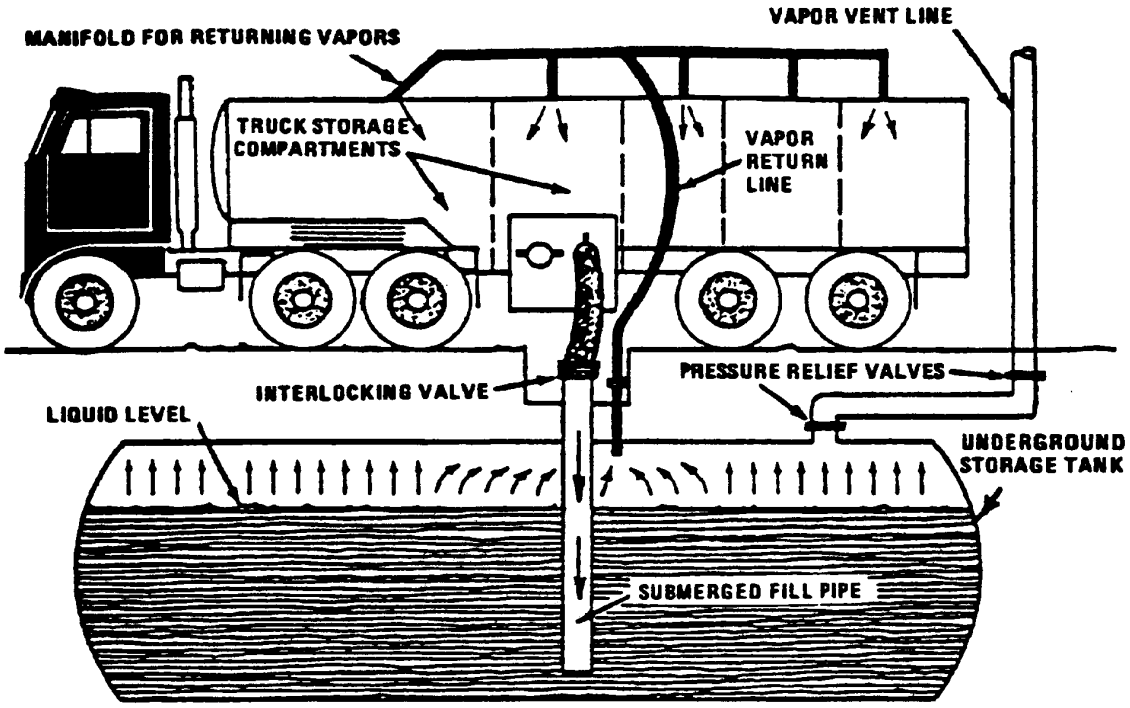

Figure 5.2-5. Tank truck unloading into a service station underground storage tank and practicing "vapor balance" form of emission control.

Table 5.2-1. SATURATION (S) FACTORS FOR CALCULATING PETROLEUM LIQUID LOADING LOSSES

Cargo Carrier	Mode Of Operation	S Factor
Tank trucks and rail tank cars	Submerged loading of a clean cargo tank	0.50
	Submerged loading: dedicated normal service	0.60
	Submerged loading: dedicated vapor balance service	1.00
	Splash loading of a clean cargo tank	1.45
	Splash loading: dedicated normal service	1.45
	Splash loading: dedicated vapor balance service	1.00
Marine vessels[a]	Submerged loading: ships	0.2
	Submerged loading: barges	0.5

[a] For products other than gasoline and crude oil. For marine loading of gasoline, use factors from Table 5.2-2. For marine loading of crude oil, use Equations 2 and 3 and Table 5.2-3.

5.5.1 Loading Loss Emissions

Table 5-12 provides simplified TOC emission factors for loading loss emissions for crude oil (EPA, AP-42 Section 5.2, 2008). TOC emissions should be converted to CH_4 (or CO_2, if present) emissions based on the CH_4 (or CO_2) content of the loading vapors.

Table 5-12. Simplified TOC Emission Factors for Loading Losses

Loading Type	Units		Crude Oil [a,b,c]
Rail / Truck Loading [d] Submerged Loading – Dedicated normal service	Original Units	lb TOC/10^3 gal loaded	2
		mg TOC/L loaded	240
	Converted Units [e]	tonne TOC/ 10^6 gal loaded	0.91
		tonne TOC/10^3 m^3 loaded	0.240
Rail / Truck Loading [d] Submerged Loading – Vapor balance service	Original Units	lb TOC/10^3 gal loaded	3
		mg TOC/L loaded	400
	Converted Units [e]	tonne TOC/ 10^6 gal loaded	1.51
		tonne TOC/10^3 m^3 loaded	0.400
Rail / Truck Loading [d] Splash Loading – Dedicated normal service	Original Units	lb TOC/10^3 gal loaded	5
		mg TOC/L loaded	580
	Converted Units [e]	tonne TOC/ 10^6 gal loaded	2.20
		tonne TOC/10^3 m^3 loaded	0.580
Rail / Truck Loading [d] Splash Loading – Vapor balance service	Original Units	lb TOC/10^3 gal loaded	3
		mg TOC/L loaded	400
	Converted Units [e]	tonne TOC/ 10^6 gal loaded	1.51
		tonne TOC/10^3 m^3 loaded	0.400
Marine Loading [f] – Ships/ocean barges	Original Units	lb TOC/10^3 gal loaded	0.61
		mg TOC/L loaded	73
	Converted Units [e]	tonne TOC/ 10^6 gal loaded	0.28
		tonne TOC/10^3 m^3 loaded	0.073
Marine Loading [f] – Barges	Original Units	lb TOC/10^3 gal loaded	1.0
		mg TOC/L loaded	120
	Converted Units [e]	tonne TOC/ 10^6 gal loaded	0.45
		tonne TOC/10^3 m^3 loaded	0.120

Footnotes and Sources:
[a] The factors shown are for total organic compounds. AP-42 reports that the VOC comprises approximately 85% of the TOC for crude oil. Thus, a simplifying assumption for the CH_4 content of the TOC is 15% in the absence of site-specific data, recognizing that this will likely overestimate emissions.
[b] EPA, AP-42, Section 5, Tables 5.2-5 and 5.2-6, 2008.
[c] The example crude oil has an RVP of 5 psia.
[d] The rail/truck loading emission factors were derived using Equation B-5 assuming a liquid temperature of 60°F.
[e] Converted from original emission factors provided in units of mg/L in AP-42. Thus, round-off errors may result in some small differences when converting from the emission factors provided in units of lb/10^3 gallons.
[f] Marine loading factors based on a loaded liquid temperature of 60°F.

Exhibit 5.19 provides a sample calculation illustrating the use of the loading loss emission factors for crude oil loading.

©2009 American Petroleum Institute

EXHIBIT 5.19: Sample Calculation for Estimating Loading Loss CH_4 Emissions Using Simplified Emission Factor Approach

INPUT DATA:
50,000 bbl/yr of crude oil is loaded into rail tankers via splash loading and dedicated normal service. The crude vapors contain 12 wt% CH_4. Calculate the CH_4 emissions.

CALCULATION METHODOLOGY:
From Table 5-12, the emission factor corresponding to crude loading losses from rail splash loading, dedicated service is 2.20 tonnes TOC/million gallons loaded. The loading emissions are calculated by converting the TOC emissions to CH_4 and applying the annual loading rate, as shown below:

$$E_{CH_4} = \frac{2.20 \text{ tonnes TOC}}{10^6 \text{ gal}} \times \frac{42 \text{ gal}}{\text{bbl}} \times \frac{50{,}000 \text{ bbl}}{\text{yr}} \times \frac{12 \text{ tonne } CH_4}{100 \text{ tonne TOC}}$$

$$\underline{E_{CH_4} = 0.554 \text{ tonnes } CH_4 / \text{yr}}$$

5.5.2 Ballasting Emissions

Ballasting operations are used to improve the stability of empty tanker ships after their cargo tanks have been unloaded. After the ships filled with petroleum liquid are unloaded at marine terminals, sea water or "ballast" water is loaded into the empty cargo tank compartment. The ballast water displaces the vapor in the "empty" cargo tank to the atmosphere resulting in ballasting emissions.

Table 5-13 provides average emission factors for estimating TOC emissions from crude ballasting operations (EPA, AP-42 Table 5.2-4, 2008).

The emission factors are for TOC and should be converted to CH_4 (or CO_2, if present) emissions based on the CH_4 (or CO_2) content of the ballasting vapors. The factors are categorized according to how full the cargo tank is prior to discharge. The "fully loaded" cargo category applies to those compartments that have a true ullage of less than 5 feet prior to crude discharge ("ullage" refers to the distance between the cargo surface level and the deck level). The "lightered or previously short loaded" category applies to those cargoes that have an arrival ullage of more than 5 feet.

Exhibit 5.20 demonstrates the use of the crude oil ballasting emission factors.

©2009 American Petroleum Institute

Natural Gas Engines

AP-42 Section 3.2

Table 3.2-2. UNCONTROLLED EMISSION FACTORS FOR 4-STROKE LEAN-BURN ENGINES[a]
(SCC 2-02-002-54)

Pollutant	Emission Factor (lb/MMBtu)[b] (fuel input)	Emission Factor Rating
Criteria Pollutants and Greenhouse Gases		
NO_x[c] 90 - 105% Load	4.08 E+00	B
NO_x[c] <90% Load	8.47 E-01	B
CO[c] 90 - 105% Load	3.17 E-01	C
CO[c] <90% Load	5.57 E-01	B
CO_2[d]	1.10 E+02	A
SO_2[e]	5.88 E-04	A
TOC[f]	1.47 E+00	A
Methane[g]	1.25 E+00	C
VOC[h]	1.18 E-01	C
PM10 (filterable)[i]	7.71 E-05	D
PM2.5 (filterable)[i]	7.71 E-05	D
PM Condensable[j]	9.91 E-03	D
Trace Organic Compounds		
1,1,2,2-Tetrachloroethane[k]	<4.00 E-05	E
1,1,2-Trichloroethane[k]	<3.18 E-05	E
1,1-Dichloroethane	<2.36 E-05	E
1,2,3-Trimethylbenzene	2.30 E-05	D
1,2,4-Trimethylbenzene	1.43 E-05	C
1,2-Dichloroethane	<2.36 E-05	E
1,2-Dichloropropane	<2.69 E-05	E
1,3,5-Trimethylbenzene	3.38 E-05	D
1,3-Butadiene[k]	2.67E-04	D
1,3-Dichloropropene[k]	<2.64 E-05	E
2-Methylnaphthalene[k]	3.32 E-05	C
2,2,4-Trimethylpentane[k]	2.50 E-04	C
Acenaphthene[k]	1.25 E-06	C

Table 3.2-2. UNCONTROLLED EMISSION FACTORS FOR 4-STROKE LEAN-BURN ENGINES (Continued)

Pollutant	Emission Factor (lb/MMBtu)[b] (fuel input)	Emission Factor Rating
Acenaphthylene[k]	5.53 E-06	C
Acetaldehyde[k,l]	8.36 E-03	A
Acrolein[k,l]	5.14 E-03	A
Benzene[k]	4.40 E-04	A
Benzo(b)fluoranthene[k]	1.66 E-07	D
Benzo(e)pyrene[k]	4.15 E-07	D
Benzo(g,h,i)perylene[k]	4.14 E-07	D
Biphenyl[k]	2.12 E-04	D
Butane	5.41 E-04	D
Butyr/Isobutyraldehyde	1.01 E-04	C
Carbon Tetrachloride[k]	<3.67 E-05	E
Chlorobenzene[k]	<3.04 E-05	E
Chloroethane	1.87 E-06	D
Chloroform[k]	<2.85 E-05	E
Chrysene[k]	6.93 E-07	C
Cyclopentane	2.27 E-04	C
Ethane	1.05 E-01	C
Ethylbenzene[k]	3.97 E-05	B
Ethylene Dibromide[k]	<4.43 E-05	E
Fluoranthene[k]	1.11 E-06	C
Fluorene[k]	5.67 E-06	C
Formaldehyde[k,l]	5.28 E-02	A
Methanol[k]	2.50 E-03	B
Methylcyclohexane	1.23 E-03	C
Methylene Chloride[k]	2.00 E-05	C
n-Hexane[k]	1.11 E-03	C
n-Nonane	1.10 E-04	C

Table 3.2-2. UNCONTROLLED EMISSION FACTORS FOR 4-STROKE LEAN-BURN ENGINES
(Continued)

Pollutant	Emission Factor (lb/MMBtu)[b] (fuel input)	Emission Factor Rating
n-Octane	3.51 E-04	C
n-Pentane	2.60 E-03	C
Naphthalene[k]	7.44 E-05	C
PAH[k]	2.69 E-05	D
Phenanthrene[k]	1.04 E-05	D
Phenol[k]	2.40 E-05	D
Propane	4.19 E-02	C
Pyrene[k]	1.36 E-06	C
Styrene[k]	<2.36 E-05	E
Tetrachloroethane[k]	2.48 E-06	D
Toluene[k]	4.08 E-04	B
Vinyl Chloride[k]	1.49 E-05	C
Xylene[k]	1.84 E-04	B

[a] Reference 7. Factors represent uncontrolled levels. For NO_x, CO, and PM10, "uncontrolled" means no combustion or add-on controls; however, the factor may include turbocharged units. For all other pollutants, "uncontrolled" means no oxidation control; the data set may include units with control techniques used for NOx control, such as PCC and SCR for lean burn engines, and PSC for rich burn engines. Factors are based on large population of engines. Factors are for engines at all loads, except as indicated. SCC = Source Classification Code. TOC = Total Organic Compounds. PM-10 = Particulate Matter ≤ 10 microns (μm) aerodynamic diameter. A "<" sign in front of a factor means that the corresponding emission factor is based on one-half of the method detection limit.

[b] Emission factors were calculated in units of (lb/MMBtu) based on procedures in EPA Method 19. To convert from (lb/MMBtu) to (lb/10^6 scf), multiply by the heat content of the fuel. If the heat content is not available, use 1020 Btu/scf. To convert from (lb/MMBtu) to (lb/hp-hr) use the following equation:

$$\text{lb/hp-hr} = (\text{lb/MMBtu})\ (\text{heat input, MMBtu/hr})\ (\text{1/operating HP, 1/hp})$$

[c] Emission tests with unreported load conditions were not included in the data set.

[d] Based on 99.5% conversion of the fuel carbon to CO_2. CO_2 [lb/MMBtu] = (3.67)(%CON)(C)(D)(1/h), where %CON = percent conversion of fuel carbon to CO_2, C = carbon content of fuel by weight (0.75), D = density of fuel, 4.1 E+04 lb/10^6 scf, and

GHG Emissions

40 CFR 98

ELECTRONIC CODE OF FEDERAL REGULATIONS

e-CFR data is current as of August 23, 2017

Title 40: Protection of Environment
PART 98—MANDATORY GREENHOUSE GAS REPORTING
Subpart C—General Stationary Fuel Combustion Sources

Table C-1 to Subpart C of Part 98—Default CO_2 Emission Factors and High Heat Values for Various Types of Fuel

Link to an amendment published at 81 FR 89252, Dec. 9, 2016.

Default CO_2 Emission Factors and High Heat Values for Various Types of Fuel

Fuel type	Default high heat value	Default CO_2 emission factor
Coal and coke	mmBtu/short ton	kg CO_2/mmBtu
Anthracite	25.09	103.69
Bituminous	24.93	93.28
Subbituminous	17.25	97.17
Lignite	14.21	97.72
Coal Coke	24.80	113.67
Mixed (Commercial sector)	21.39	94.27
Mixed (Industrial coking)	26.28	93.90
Mixed (Industrial sector)	22.35	94.67
Mixed (Electric Power sector)	19.73	95.52
Natural gas	mmBtu/scf	kg CO_2/mmBtu
(Weighted U.S. Average)	1.026×10^{-3}	53.06
Petroleum products	mmBtu/gallon	kg CO_2/mmBtu
Distillate Fuel Oil No. 1	0.139	73.25
Distillate Fuel Oil No. 2	0.138	73.96
Distillate Fuel Oil No. 4	0.146	75.04
Residual Fuel Oil No. 5	0.140	72.93
Residual Fuel Oil No. 6	0.150	75.10
Used Oil	0.138	74.00
Kerosene	0.135	75.20
Liquefied petroleum gases (LPG)[1]	0.092	61.71
Propane[1]	0.091	62.87
Propylene[2]	0.091	67.77
Ethane[1]	0.068	59.60
Ethanol	0.084	68.44
Ethylene[2]	0.058	65.96
Isobutane[1]	0.099	64.94
Isobutylene[1]	0.103	68.86
Butane[1]	0.103	64.77
Butylene[1]	0.105	68.72
Naphtha (<401 deg F)	0.125	68.02
Natural Gasoline	0.110	66.88
Other Oil (>401 deg F)	0.139	76.22
Pentanes Plus	0.110	70.02
Petrochemical Feedstocks	0.125	71.02
Petroleum Coke	0.143	102.41
Special Naphtha	0.125	72.34
Unfinished Oils	0.139	74.54
Heavy Gas Oils	0.148	74.92
Lubricants	0.144	74.27
Motor Gasoline	0.125	70.22
Aviation Gasoline	0.120	69.25
Kerosene-Type Jet Fuel	0.135	72.22
Asphalt and Road Oil	0.158	75.36
Crude Oil	0.138	74.54
Other fuels—solid	mmBtu/short ton	kg CO_2/mmBtu
Municipal Solid Waste	9.95[3]	90.7
Tires	28.00	85.97
Plastics	38.00	75.00

Petroleum Coke	30.00	102.41
Other fuels—gaseous	mmBtu/scf	kg CO_2/mmBtu
Blast Furnace Gas	0.092×10^{-3}	274.32
Coke Oven Gas	0.599×10^{-3}	46.85
Propane Gas	2.516×10^{-3}	61.46
Fuel Gas[4]	1.388×10^{-3}	59.00
Biomass fuels—solid	mmBtu/short ton	kg CO_2/mmBtu
Wood and Wood Residuals (dry basis)[5]	17.48	93.80
Agricultural Byproducts	8.25	118.17
Peat	8.00	111.84
Solid Byproducts	10.39	105.51
Biomass fuels—gaseous	mmBtu/scf	kg CO_2/mmBtu
Landfill Gas	0.485×10^{-3}	52.07
Other Biomass Gases	0.655×10^{-3}	52.07
Biomass Fuels—Liquid	mmBtu/gallon	kg CO_2/mmBtu
Ethanol	0.084	68.44
Biodiesel (100%)	0.128	73.84
Rendered Animal Fat	0.125	71.06
Vegetable Oil	0.120	81.55

[1]The HHV for components of LPG determined at 60 °F and saturation pressure with the exception of ethylene.

[2]Ethylene HHV determined at 41 °F (5 °C) and saturation pressure.

[3]Use of this default HHV is allowed only for: (a) Units that combust MSW, do not generate steam, and are allowed to use Tier 1; (b) units that derive no more than 10 percent of their annual heat input from MSW and/or tires; and (c) small batch incinerators that combust no more than 1,000 tons of MSW per year.

[4]Reporters subject to subpart X of this part that are complying with §98.243(d) or subpart Y of this part may only use the default HHV and the default CO_2 emission factor for fuel gas combustion under the conditions prescribed in §98.243(d)(2)(i) and (d)(2)(ii) and §98.252(a)(1) and (a)(2), respectively. Otherwise, reporters subject to subpart X or subpart Y shall use either Tier 3 (Equation C-5) or Tier 4.

[5]Use the following formula to calculate a wet basis HHV for use in Equation C-1: $HHV_w = ((100 - M)/100)*HHV_d$ where HHV_w = wet basis HHV, M = moisture content (percent) and HHV_d = dry basis HHV from Table C-1.

[78 FR 71950, Nov. 29, 2013]

Need assistance?

ELECTRONIC CODE OF FEDERAL REGULATIONS

e-CFR data is current as of August 23, 2017

Title 40: Protection of Environment
PART 98—MANDATORY GREENHOUSE GAS REPORTING
Subpart C—General Stationary Fuel Combustion Sources

TABLE C-2 TO SUBPART C OF PART 98—DEFAULT CH_4 AND N_2O EMISSION FACTORS FOR VARIOUS TYPES OF FUEL

Link to an amendment published at 81 FR 89252, Dec. 9, 2016.

Fuel type	Default CH_4 emission factor (kg CH_4/mmBtu)	Default N_2O emission factor (kg N_2O/mmBtu)
Coal and Coke (All fuel types in Table C-1)	1.1×10^{-02}	1.6×10^{-03}
Natural Gas	1.0×10^{-03}	1.0×10^{-04}
Petroleum (All fuel types in Table C-1)	3.0×10^{-03}	6.0×10^{-04}
Fuel Gas	3.0×10^{-03}	6.0×10^{-04}
Municipal Solid Waste	3.2×10^{-02}	4.2×10^{-03}
Tires	3.2×10^{-02}	4.2×10^{-03}
Blast Furnace Gas	2.2×10^{-05}	1.0×10^{-04}
Coke Oven Gas	4.8×10^{-04}	1.0×10^{-04}
Biomass Fuels—Solid (All fuel types in Table C-1, except wood and wood residuals)	3.2×10^{-02}	4.2×10^{-03}
Wood and wood residuals	7.2×10^{-03}	3.6×10^{-03}
Biomass Fuels—Gaseous (All fuel types in Table C-1)	3.2×10^{-03}	6.3×10^{-04}
Biomass Fuels—Liquid (All fuel types in Table C-1)	1.1×10^{-03}	1.1×10^{-04}

Note: Those employing this table are assumed to fall under the IPCC definitions of the “Energy Industry” or “Manufacturing Industries and Construction”. In all fuels except for coal the values for these two categories are identical. For coal combustion, those who fall within the IPCC “Energy Industry” category may employ a value of 1g of CH_4/mmBtu.

[78 FR 71952, Nov. 29, 2013]

Need assistance?

ugiti e Emissions

TCEQ APDG 6422 and

EPA-453/R-95-017

Table II: Facility/Compound Specific Fugitive Emission Factors

Equipment/Service	Compound Specific See Section I for more information			Facility Specific[1]					
	Ethylene Oxide[2] w/LDAR	Phosgene[3] w/LDAR	Butadiene w/LDAR[4]	Petroleum Marketing Terminal[5, 6] w/28PET	Oil and Gas ProductionOperation[6]				Refinery[6]
					Gas	Heavy Oil < 20 API	Light Oil	Water/ Light Oil	
Valves					0.00992	0.0000185	0.0055	0.000216	
Gas/Vapor	0.000444	0.00000216	0.001105	0.0000287					0.059
Light Liquid	0.00055	0.00000199	0.00314	0.0000948					0.024
Heavy Liquid				0.0000948					0.00051
Pumps	0.042651	0.0000201	0.05634		0.00529	0.00113[7]	0.02866	0.000052	
Light Liquid				0.00119					0.251
Heavy Liquid				0.00119					0.046
Flanges/Connectors[11]	0.000555	0.00000011	0.000307		0.00086	0.00000086	0.000243	0.000006	0.00055
					0.00044	0.0000165	0.000463	0.000243	
Gas/Vapor				0.000092604					
Light Liquid				0.00001762					
Heavy Liquid				0.0000176					
Compressors	0.000767		0.000004		0.0194	0.0000683	0.0165	0.0309	1.399
Relief Valve	0.000165	0.0000162	0.02996		0.0194	0.0000683	0.0165	0.0309	0.35
Open-ended Lines[8]	0.001078	0.00000007	0.00012		0.00441	0.000309	0.00309	0.00055	0.0051
Sampling[9]	0.000088		0.00012						0.033
Other[10]					0.0194	0.0000683	0.0165	0.0309	
Gas/Vapor				0.000265					
Light/Heavy Liquid				0.000287					
Process Drains					0.0194	0.0000683	0.0165	0.0309	0.07

Endnotes Table II

1. **Factors give the total organic compound emission rate. Multiply by the weight percent of non-methane, non-ethane organics to get the VOC emission rate.**
2. **These emission factors require the use of the 28MID fugitive program. Monitoring must occur at a leak definition of 500 ppmv. No additional control credit can be applied to these factors except 28CNTQ and 28CNTA. Emission factors are from EOIC Fugitive Emission Study, summer 1988.**
3. **These emission factors require the use of the 28MID fugitive program. Monitoring must occur at a leak definition of 50 ppmv. No additional control credit can be applied to these factors. Emission factors are from Phosgene Panel Study, summer 1988.**
4. **These emission factors require the use of the 28MID fugitive program. Monitoring must occur at a leak definition of 100 ppmv. No additional control credit can be applied to these factors. Emission factors are from Randall, J. L., et al., Radian Corporation. Fugitive Emissions from the 1,3-butadiene Production Industry: A Field Study. Final Report. Prepared for the 1,3-Butadiene Panel for the Chemical Manufacturers Association. April 1989.**
5. **Control credit is included in the factor; no additional control credit can be applied to these factors. Monthly 28 PET inspection is required.**
6. **Factors are taken from EPA Document EPA-453/R-95-017, November 1995, pages 2-13, 2-14, and 2-15.**
7. **Heavy liquid oil – Pump factor was not derived during the API study. The factor is the SOCMI without C_2 Heavy Liquid – Pump factor with a 93% reduction credit for the physical inspection.**

TABLE 5-2. CONTROL EFFECTIVENESS FOR AN LDAR PROGRAM AT A SOCMI PROCESS UNIT

Equipment type and service	Control effectiveness (%)		
	Monthly monitoring 10,000 ppmv leak definition	Quarterly monitoring 10,000 ppmv leak definition	HON reg neg[a]
Valves - gas	87	67	92
Valves - light liquid	84	61	88
Pumps - light liquid	69	45	75
Connectors - all	b	b	93

[a] Control effectiveness attributable to the requirements of the proposed hazardous organic NESHAP equipment leak negotiated regulation are estimated based on equipment-specific leak definitions and performance levels.

[b] Data are not available to estimate control effectiveness.

Road Emissions

AP-42 Section 13.2 and NM AQB Guidance

Table 13.2.2-1. TYPICAL SILT CONTENT VALUES OF SURFACE MATERIAL ON INDUSTRIAL UNPAVED ROADS[a]

Industry	Road Use Or Surface Material	Plant Sites	No. Of Samples	Silt Content (%)	
				Range	Mean
Copper smelting	Plant road	1	3	16 - 19	17
Iron and steel production	Plant road	19	135	0.2 - 19	6.0
Sand and gravel processing	Plant road	1	3	4.1 - 6.0	4.8
	Material storage area	1	1	-	7.1
Stone quarrying and processing	Plant road	2	10	2.4 - 16	10
	Haul road to/from pit	4	20	5.0-15	8.3
Taconite mining and processing	Service road	1	8	2.4 - 7.1	4.3
	Haul road to/from pit	1	12	3.9 - 9.7	5.8
Western surface coal mining	Haul road to/from pit	3	21	2.8 - 18	8.4
	Plant road	2	2	4.9 - 5.3	5.1
	Scraper route	3	10	7.2 - 25	17
	Haul road (freshly graded)	2	5	18 - 29	24
Construction sites	Scraper routes	7	20	0.56-23	8.5
Lumber sawmills	Log yards	2	2	4.8-12	8.4
Municipal solid waste landfills	Disposal routes	4	20	2.2 - 21	6.4

[a]References 1,5-15.

The following empirical expressions may be used to estimate the quantity in pounds (lb) of size-specific particulate emissions from an unpaved road, per vehicle mile traveled (VMT):

For vehicles traveling on unpaved surfaces at industrial sites, emissions are estimated from the following equation:

$$E = k\,(s/12)^a (W/3)^b \quad (1a)$$

and, for vehicles traveling on publicly accessible roads, dominated by light duty vehicles, emissions may be estimated from the following:

$$E = \frac{k\,(s/12)^a (S/30)^d}{(M/0.5)^c} - C \quad (1b)$$

where k, a, b, c and d are empirical constants (Reference 6) given below and

E = size-specific emission factor (lb/VMT)
s = surface material silt content (%)
W = mean vehicle weight (tons)
M = surface material moisture content (%)
S = mean vehicle speed (mph)
C = emission factor for 1980's vehicle fleet exhaust, brake wear and tire wear.

The source characteristics s, W and M are referred to as correction parameters for adjusting the emission estimates to local conditions. The metric conversion from lb/VMT to grams (g) per vehicle kilometer traveled (VKT) is as follows:

1 lb/VMT = 281.9 g/VKT

The constants for Equations 1a and 1b based on the stated aerodynamic particle sizes are shown in Tables 13.2.2-2 and 13.2.2-4. The PM-2.5 particle size multipliers (k-factors) are taken from Reference 27.

Table 13.2.2-2. CONSTANTS FOR EQUATIONS 1a AND 1b

Constant	Industrial Roads (Equation 1a)			Public Roads (Equation 1b)		
	PM-2.5	PM-10	PM-30*	PM-2.5	PM-10	PM-30*
k (lb/VMT)	0.15	1.5	4.9	0.18	1.8	6.0
a	0.9	0.9	0.7	1	1	1
b	0.45	0.45	0.45	-	-	-
c	-	-	-	0.2	0.2	0.3
d	-	-	-	0.5	0.5	0.3
Quality Rating	B	B	B	B	B	B

*Assumed equivalent to total suspended particulate matter (TSP)
"-" = not used in the emission factor equation

Table 13.2.2-2 also contains the quality ratings for the various size-specific versions of Equation 1a and 1b. The equation retains the assigned quality rating, if applied within the ranges of source conditions, shown in Table 13.2.2-3, that were tested in developing the equation:

Table 13.2.2-3. RANGE OF SOURCE CONDITIONS USED IN DEVELOPING EQUATION 1a AND 1b

Emission Factor	Surface Silt Content, %	Mean Vehicle Weight		Mean Vehicle Speed		Mean No. of Wheels	Surface Moisture Content, %
		Mg	ton	km/hr	mph		
Industrial Roads (Equation 1a)	1.8-25.2	1.8-260	2-290	8-69	5-43	4-17[a]	0.03-13
Public Roads (Equation 1b)	1.8-35	1.4-2.7	1.5-3	16-88	10-55	4-4.8	0.03-13

[a] See discussion in text.

As noted earlier, the models presented as Equations 1a and 1b were developed from tests of traffic on unpaved surfaces. Unpaved roads have a hard, generally nonporous surface that usually dries quickly after a rainfall or watering, because of traffic-enhanced natural evaporation. (Factors influencing how fast a road dries are discussed in Section 13.2.2.3, below.) The quality ratings given above pertain to the mid-range of the measured source conditions for the equation. A higher mean vehicle weight and a higher than normal traffic rate may be justified when performing a worst-case analysis of emissions from unpaved roads.

The emission factors for the exhaust, brake wear and tire wear of a 1980's vehicle fleet (*C*) was obtained from EPA's MOBILE6.2 model [23]. The emission factor also varies with aerodynamic size range

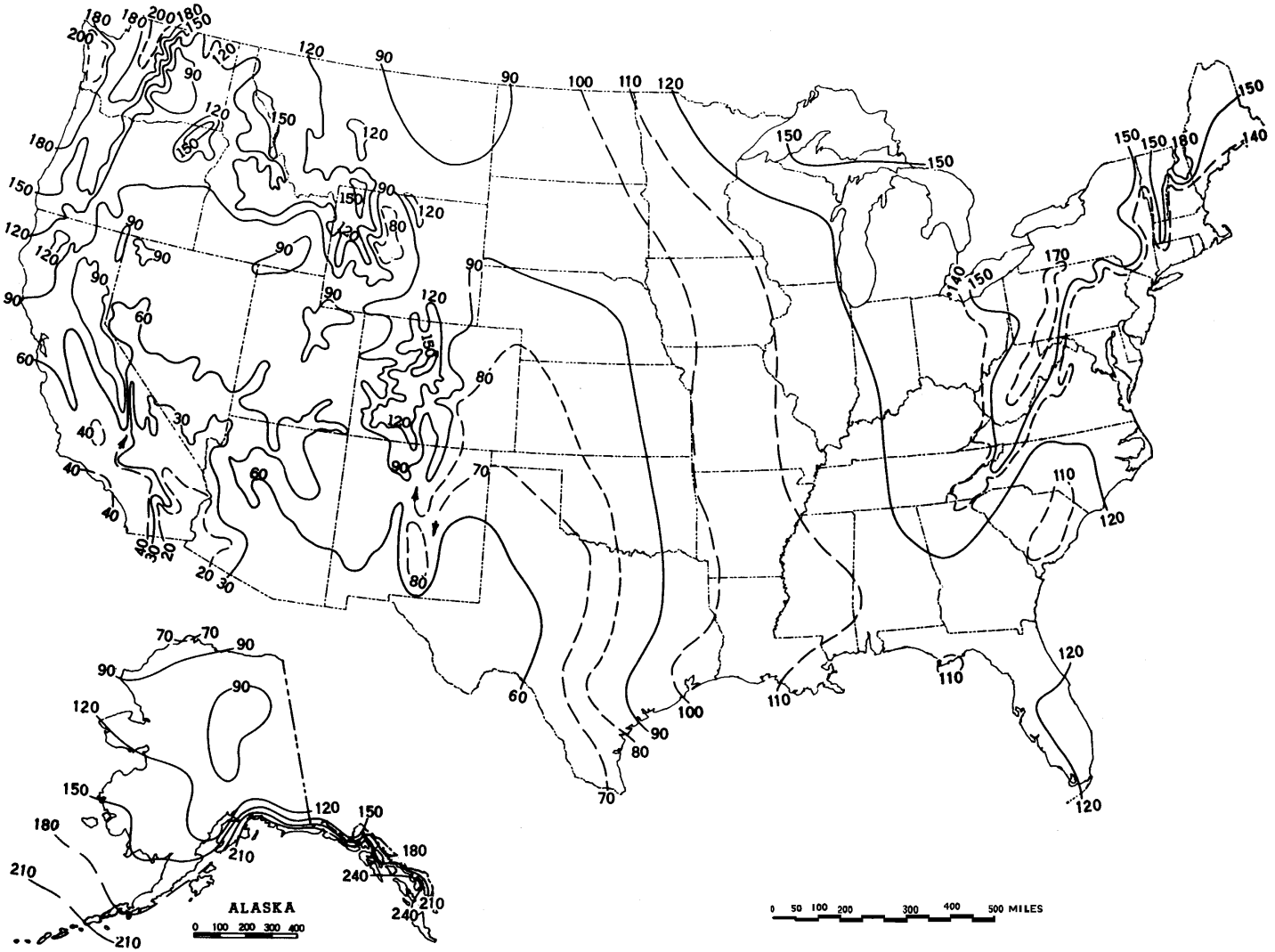

Figure 13.2.2-1. Mean number of days with 0.01 inch or more of precipitation in United States.

New Mexico
ENVIRONMENT DEPARTMENT

505 Camino de los Marquez, Suite 1
Santa Fe, NM 87505
Phone (505) 476-4300
Fax (505) 476-4375
www.env.nm.gov

SUSANA MARTINEZ
GOVERNOR

JOHN A. SANCHEZ
LIEUTENANT GOVERNOR

BUTCH TONGATE
CABINET SECRETARY-
DESIGATE

JC BORREGO
DEPUTY SECRETARY

DEPARTMENT ACCEPTED VALUES FOR:
AGGREGATE HANDLING, STORAGE PILE, and HAUL ROAD EMISSIONS

TO: Applicants and Air Quality Bureau Permitting Staff

SUBJECT: Department accepted default values for percent silt, wind speed, moisture content, and control efficiencies for haul road control measures

This guidance document provides the Department accepted default values for correction parameters in the emission calculation equations for aggregate handling and storage piles emissions in construction permit applications and notices of intent submitted under 20.2.72 and 20.2.73 NMAC; and the Department accepted control efficiencies for haul road control measures for applications submitted under 20.2.72 NMAC.

Aggregate Handling and Storage Pile Emission Calculations

Applicants should calculate the particulate matter emissions from aggregate handling and storage piles using the EPA's AP-42 Chapter 13.2.4.
http://www3.epa.gov/ttn/chief/ap42/ch13/final/c13s0204.pdf

Equation 1 from Chapter 13.2.4 requires users to input values for two correction parameters, U and M, where U = mean wind speed and M = material moisture content. Below are the accepted values for U and M:

Default Values for Chapter 13.2.4, Equation 1:

Parameter	Default Value
U = Mean wind speed (miles per hour)	11 mph
M = Material moisture content (% water)	2%

Applicants must receive preapproval from the Department if they wish to assume a higher moisture content and/or a lower wind speed in these calculations. Higher moisture contents may require site specific testing either as a permit condition or submitted with the application. Applicants may assume higher wind speeds and lower percent moisture content in their calculations without prior approval from the Department.

Haul Road Emissions and Control Measure Efficiencies

Applicants should calculate the particulate matter emissions from unpaved haul roads using the EPA's AP-42 Chapter 13.2.2. http://www3.epa.gov/ttn/chief/ap42/ch13/final/c13s0202.pdf

Equation 1(a) from Chapter 13.2.2 requires users to input values for two correction parameters, s and W, where s = surface material silt content (%) and W = mean vehicle weight (tons). The applicant should calculate the mean vehicle weight in accordance with the chapter's instructions. Below is the accepted value for the parameter s:

Default Values for Chapter 13.2.2, Equation 1(a):

Parameter	Default Value
s = surface material silt content (%)	4.8%

Applicants may use a higher silt content without prior approval from the Department. Use of a lower silt content requires prior approval from the Department and may require site specific testing in support of the request.

Equation 2 from Chapter 13.2.2 allows users to take credit for the number of days that receive precipitation in excess of 0.01 inches, in the annual emissions calculation, where P = number of days in a year with at least 0.01 inches of precipitation.

Default Values for Chapter 13.2.2, Equation 2:

Parameter	Default Value
P = number of days in a year with at least 0.01 inches of precipitation	70 days

Applications submitted under Part 72 may request to apply control measures to reduce the particulate matter emissions from facility haul roads. Applications submitted under Part 73 may not consider any emission reduction from control measures in the potential emission rate calculation, as registrations issued under Part 73 are not federally enforceable under the Clean Air Act or the New Mexico Air Quality Control Act. In order for those control measures to be federally enforceable, the controls must be a requirement in an air quality permit.

Below are the Department accepted control efficiencies for various haul road control measures:

Haul Road Control Measures and Control Efficiency:

Control Measure	Control Efficiency
None	0%
Base course **or** watering	60%
Base course **and** watering	80%
Base course **and** surfactant	90%
Paved **and** Swept	95%

Fugitive Dust Control Measures Applicable for the WRAP Region

Source Category	Control Measure	Published PM10 Control Efficiency
Agricultural Tilling	Reduce tilling during high winds	1 – 5%
	Roughen surface	15 – 64%
	Modify equipment	50%
	Employ sequential cropping	50%
	Increase soil moisture	90%
	Use other conservation management practices	25 - 100%
Agricultural Harvesting	Limited activity during high winds	5 – 70%
	Modify equipment	50%
	Night farming	10%
	New techniques for drying fruit	25 –60%
Construction/Demolition	Water unpaved surfaces	10 – 74%
	Limit on-site vehicle speed to 15 mph	57%
	Apply dust suppressant to unpaved areas	84%
	Prohibit activities during high winds	98%
Materials Handling	Implement wet suppression	50 – 90%
	Erect 3-sided enclosure around storage piles	75%
	Cover storage pile with a tarp during high winds	90%
Paved Roads	Sweep streets	4 – 26%
	Minimize trackout	40 – 80%
	Remove deposits on road ASAP	> 90%
Unpaved Roads	Limit vehicle speed to 25 mph	44%
	Apply water	10 – 74%
	Apply dust suppressant	84%
	Pave the surface	>90%
Mineral Products Industry	Cyclone or muliclone	68 –79%
	Wet scrubber	78 –98%
	Fabric filter	99 – 99.8%
	Electrostatic precipitator	90 – 99.5%
Abrasive Blasting	Water spray	50 – 93%
	Fabric filter	> 95%
Livestock Husbandry	Daily watering of corrals and pens	> 10%
	Add wood chips or mulch to working pens	> 10%
Wind Erosion (agricultural, open area, and storage piles)	Plant trees or shrubs as a windbreak	25%
	Create cross-wind ridges	24 – 93%
	Erect artificial wind barriers	4 – 88%
	Apply dust suppressant or gravel	84%
	Revegetate; apply cover crop	90%
	Water exposed area before high winds	90%

Tab 8
Section 8 - Map(s)

Section 8

Map(s)

A map such as a 7.5 minute topographic quadrangle showing the exact location of the source. The map shall also include the following:

The UTM or Longitudinal coordinate system on both axes	An indicator showing which direction is north
A minimum radius around the plant of 0.8km (0.5 miles)	Access and haul roads
Topographic features of the area	Facility property boundaries
The name of the map	The area which will be restricted to public access
A graphical scale	

A site location map and aerial image illustrating the property boundary and surrounding access roads is provided.

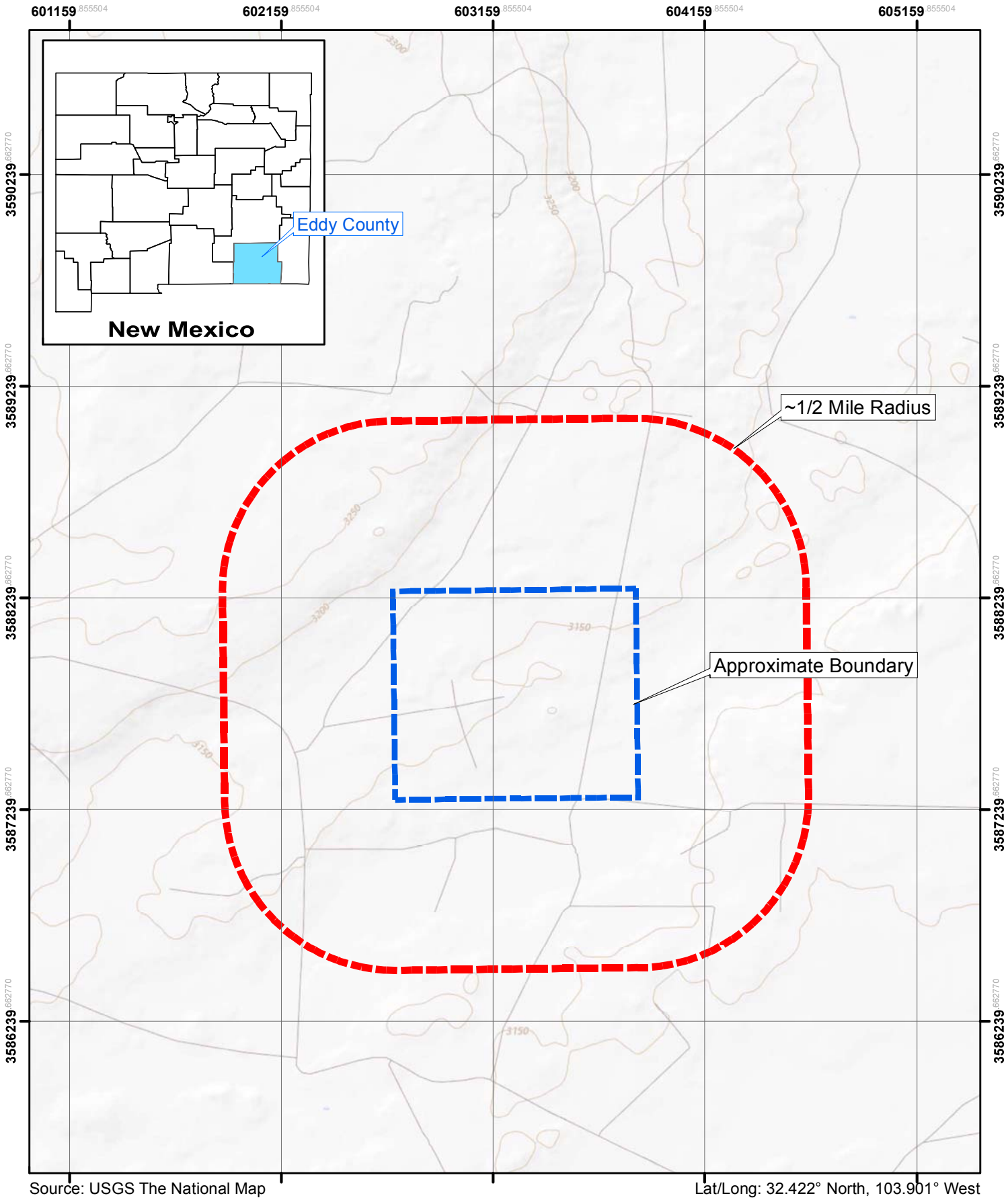

Source: USGS The National Map

Lat/Long: 32.422° North, 103.901° West

0 1,000 2,000

Feet

Coordinate System:
NAD 1983 UTM Zone 13N

XTO ENERGY, INC.
HUSKY CDP
EDDY COUNTY, NEW MEXICO

11157432-01
Jan 15, 2019

SITE LOCATION MAP

FIGURE 3

GIS File: I:\GIS\Projects\8 digits\1115----\11157432-XTO-Energy\11157432-01(NMED002)GIS-DL001.mxd

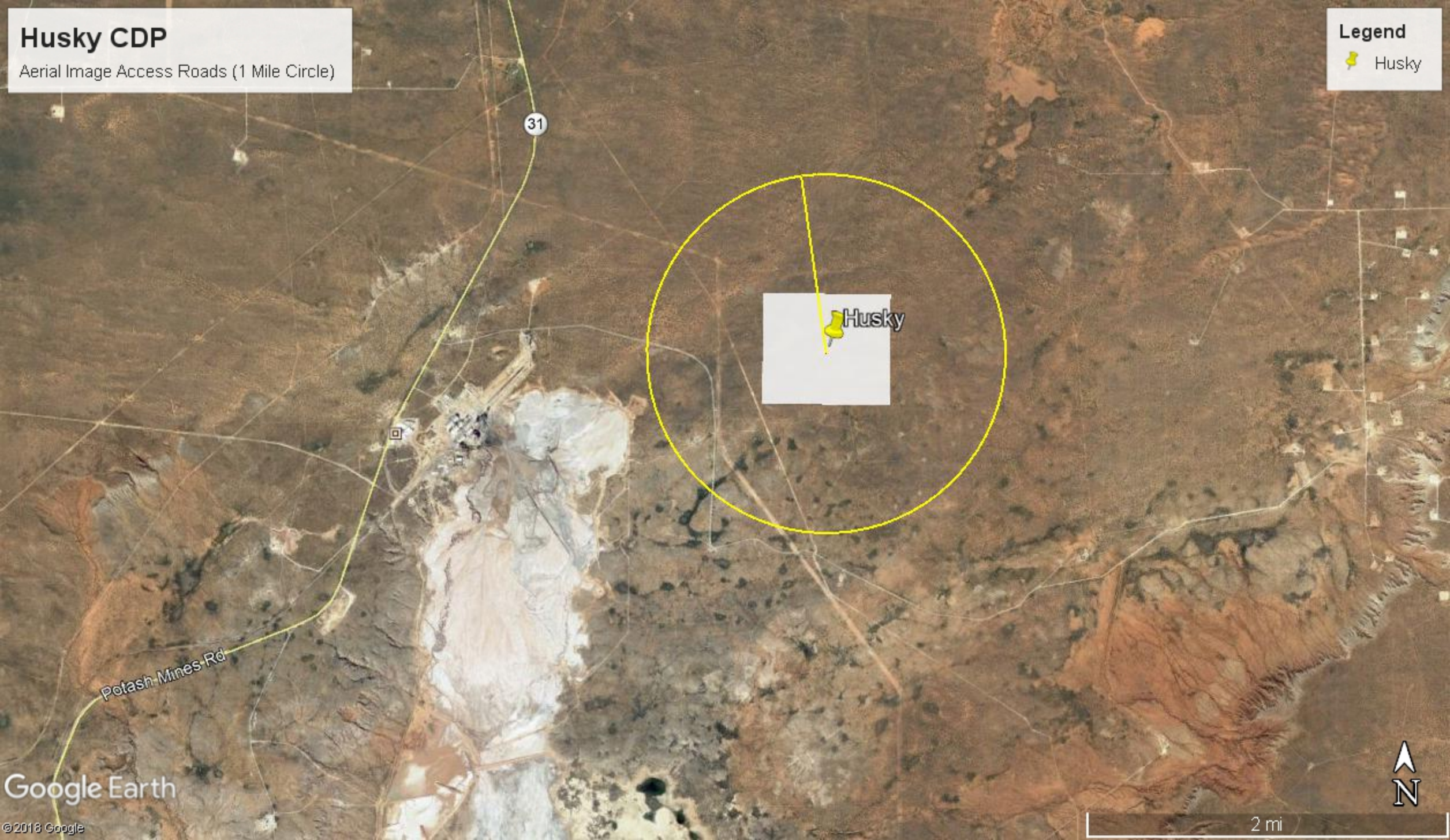
Husky CDP
Aerial Image Access Roads (1 Mile Circle)
Legend
Husky
31
Husky
Potash Mines Rd
Google Earth
© 2018 Google
N
2 mi

Class I Areas Within 300 km of Husky

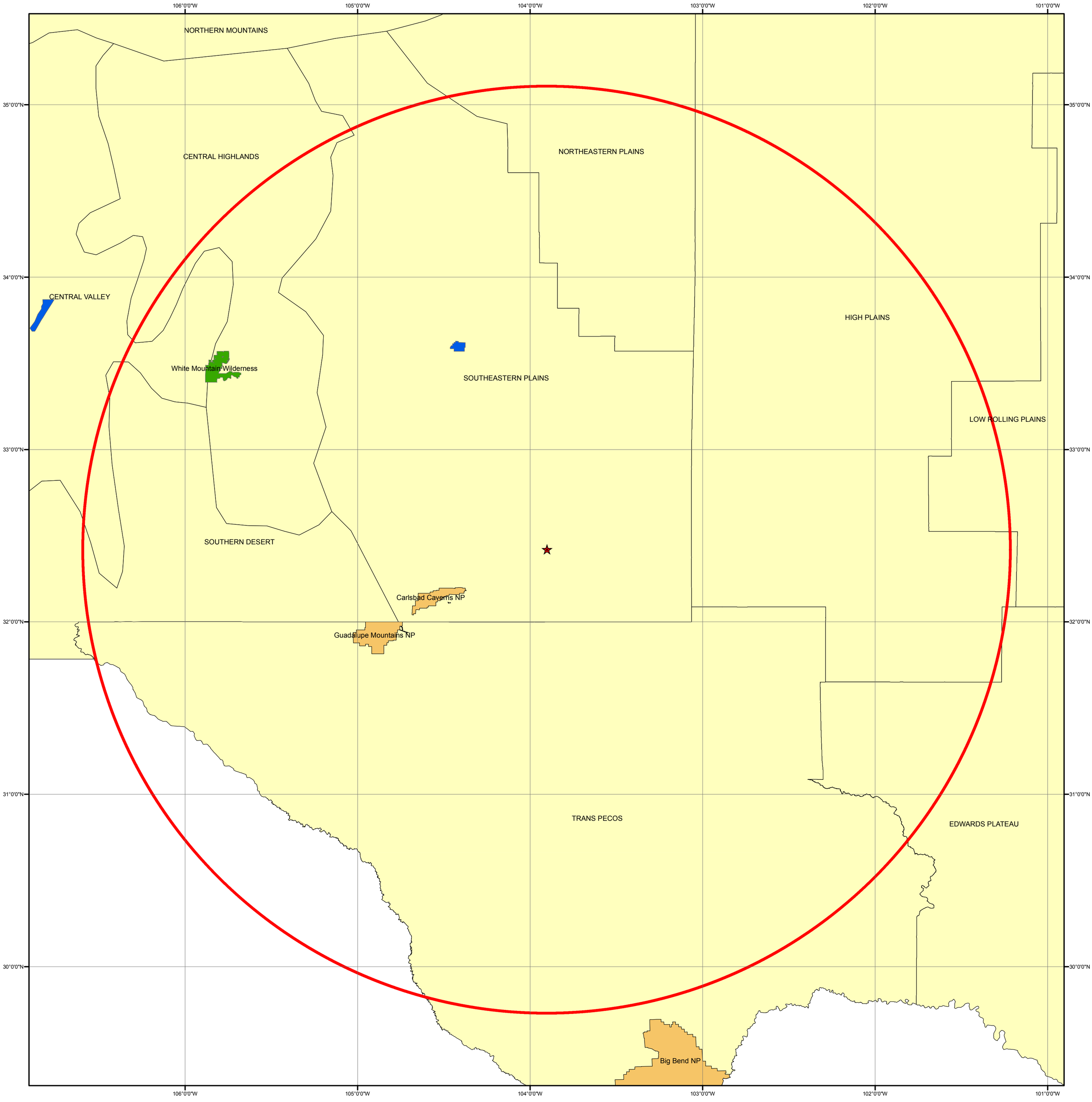

Legend

- US Forest Service
- National Park Service
- Fish & Wildlife
- Climate Divisions

1:1,600,000

0 12.5 25 50 75 100 Miles

Tab 9
Section 9 - Proof of Public Notice

Section 9

Proof of Public Notice

(for NSR applications submitting under 20.2.72 or 20.2.74 NMAC)
(This proof is required by: 20.2.72.203.A.14 NMAC "Documentary Proof of applicant's public notice")

☑ **I have read the AQB "Guidelines for Public Notification for Air Quality Permit Applications"**
This document provides detailed instructions about public notice requirements for various permitting actions. It also provides public notice examples and certification forms. Material mistakes in the public notice will require a re-notice before issuance of the permit.

Unless otherwise allowed elsewhere in this document, the following items document proof of the applicant's Public Notification. Please include this page in your proof of public notice submittal with checkmarks indicating which documents are being submitted with the application.

New Permit and **Significant Permit Revision** public notices must include all items in this list.

Technical Revision public notices require only items 1, 5, 9, and 10.

Per the Guidelines for Public Notification document mentioned above, include:

1. ☑ A copy of the certified letter receipts with post marks (20.2.72.203.B NMAC)
2. ☑ A list of the places where the public notice has been posted in at least four publicly accessible and conspicuous places, including the proposed or existing facility entrance. (e.g: post office, library, grocery, etc.)
3. ☑ A copy of the property tax record (20.2.72.203.B NMAC).
4. ☑ A sample of the letters sent to the owners of record.
5. ☑ A sample of the letters sent to counties, municipalities, and Indian tribes.
6. ☑ A sample of the public notice posted and a verification of the local postings.
7. ☑ A table of the noticed citizens, counties, municipalities and tribes and to whom the notices were sent in each group.
8. ☑ A copy of the public service announcement (PSA) sent to a local radio station and documentary proof of submittal.
9. ☑ A copy of the classified or legal ad including the page header (date and newspaper title) or its affidavit of publication stating the ad date, and a copy of the ad. When appropriate, this ad shall be printed in both English and Spanish.
10. ☑ A copy of the display ad including the page header (date and newspaper title) or its affidavit of publication stating the ad date, and a copy of the ad. When appropriate, this ad shall be printed in both English and Spanish.
11. ☑ A map with a graphic scale showing the facility boundary and the surrounding area in which owners of record were notified by mail. This is necessary for verification that the correct facility boundary was used in determining distance for notifying land owners of record.

Certified Mail Receipts with Postmarks

7017 3040 0000 9587 9619

U.S. Postal Service™
CERTIFIED MAIL® RECEIPT
Domestic Mail Only

For delivery information, visit our website at www.usps.com®.

OFFICIAL USE

Certified Mail Fee
$

Extra Services & Fees (check box, add fee as appropriate)
- ☐ Return Receipt (hardcopy) $
- ☐ Return Receipt (electronic) $
- ☐ Certified Mail Restricted Delivery $
- ☐ Adult Signature Required $
- ☐ Adult Signature Restricted Delivery $

Postage
$

Total Postage and Fees
$ 6.36

Postmark Here
OCT 23 2019

Sent To: Lea County Manager
Street and Apt. No., or PO Box No.: 100 N. Main - Suite 4
City, State, ZIP+4®: Lovington, NM 88260

PS Form 3800, April 2015 PSN 7530-02-000-9047 See Reverse for Instructions

7017 3040 0000 9587 9596

U.S. Postal Service™
CERTIFIED MAIL® RECEIPT
Domestic Mail Only

For delivery information, visit our website at www.usps.com®.

OFFICIAL USE

Certified Mail Fee
$

Extra Services & Fees (check box, add fee as appropriate)
- ☐ Return Receipt (hardcopy) $
- ☐ Return Receipt (electronic) $
- ☐ Certified Mail Restricted Delivery $
- ☐ Adult Signature Required $
- ☐ Adult Signature Restricted Delivery $

Postage
$

Total Postage and Fees
$ 6.36

Postmark Here
OCT 23 2019

Sent To: BLM
Street and Apt. No., or PO Box No.: 620 E. Greene St
City, State, ZIP+4®: Carlsbad, NM 88220-6292

PS Form 3800, April 2015 PSN 7530-02-000-9047 See Reverse for Instructions

7017 3040 0000 9587 9626

U.S. Postal Service™
CERTIFIED MAIL® RECEIPT
Domestic Mail Only

For delivery information, visit our website at www.usps.com®.

OFFICIAL USE

Certified Mail Fee
$

Extra Services & Fees (check box, add fee as appropriate)
- ☐ Return Receipt (hardcopy) $
- ☐ Return Receipt (electronic) $
- ☐ Certified Mail Restricted Delivery $
- ☐ Adult Signature Required $
- ☐ Adult Signature Restricted Delivery $

Postage
$

Total Postage and Fees
$ 6.36

Postmark Here
OCT 23 2019

Sent To: State of NM Land Office
Street and Apt. No., or PO Box No.: 310 Old Santa Fe Trail
City, State, ZIP+4®: Santa Fe, NM 87501

PS Form 3800, April 2015 PSN 7530-02-000-9047 See Reverse for Instructions

7017 3040 0000 9587 9602

U.S. Postal Service™
CERTIFIED MAIL® RECEIPT
Domestic Mail Only

For delivery information, visit our website at www.usps.com®.

OFFICIAL USE

Certified Mail Fee
$

Extra Services & Fees (check box, add fee as appropriate)
- ☐ Return Receipt (hardcopy) $
- ☐ Return Receipt (electronic) $
- ☐ Certified Mail Restricted Delivery $
- ☐ Adult Signature Required $
- ☐ Adult Signature Restricted Delivery $

Postage
$

Total Postage and Fees
$ 6.36

Postmark Here
OCT 23 2019
6.36

Sent To: Eddy County Manager
Street and Apt. No., or PO Box No.: 101 W Greene St - Ste 110
City, State, ZIP+4®: Carlsbad, NM 88220

PS Form 3800, April 2015 PSN 7530-02-000-9047 See Reverse for Instructions

List of Places Posted

Site Location

Albertson's - Carlsbad

Carlsbad Library

Carlsbad Post Office

General Posting of Notices – Certification

Husky CDP

I, Brayden Hamlin, the undersigned, certify that on 10/23/2019, a true and correct copy of the attached Public Notice was posted in the following publicly accessible and conspicuous places in Carlsbad, Eddy County, State of New Mexico on the following dates:

1. Facility
2. Post office
3. Library
4. Albertsons

Signed this 23rd day of October, 2019.

Brayden Hamlin
Signature

10/23/2019
Date

Brayden Hamlin
Printed Name

Safety Environmental
Title {APPLICANT OR RELATIONSHIP TO APPLICANT}

Scanned with CamScanner



Scanned with CamScanner

Property Tax Records

Property Record Card

Eddy Assessor

BUREAU OF LAND MANAGEMENT

Account: R094690

Tax Area: CO_NR - CARLSBAD-OUT (Nonresidential)

Acres: 0.000

Parcel: 4-175-126-285-264

Situs Address:

Value Summary

Value By:	Market	Override
Land (1)	$3,114	N/A
Total	**$3,114**	**$3,114**

Legal Description

Quarter: NE S: 31 T: 21S R: 30E Quarter: NW S: 31 T: 21S R: 30E Quarter: SW S: 31 T: 21S R: 30E Quarter: SE S: 31 T: 21S R: 30E ALL MAP# 207-31 LOC E OF CARLSBAD EXEMPT

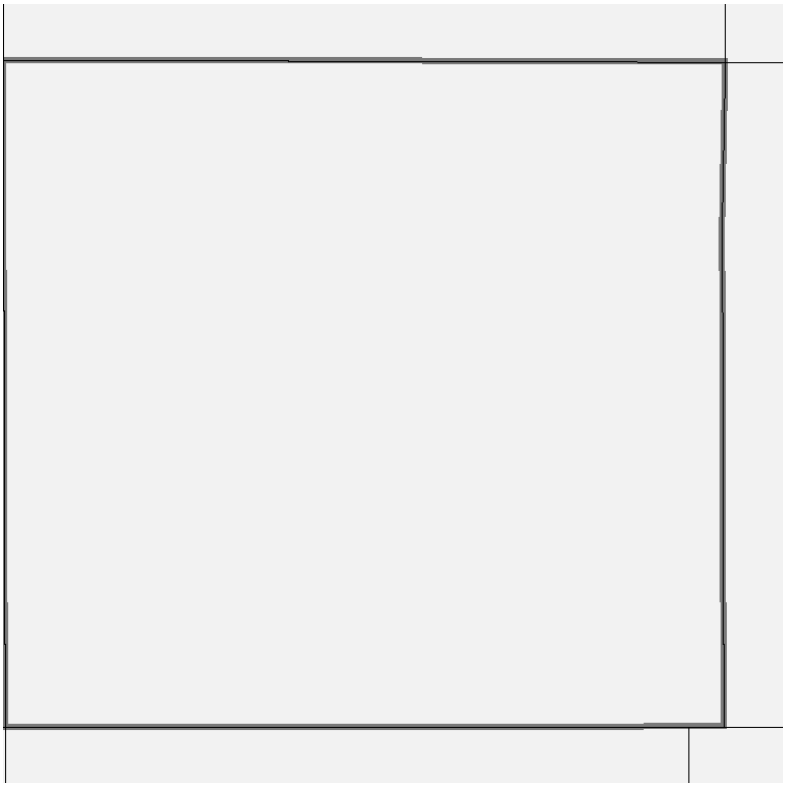

Land Occurrence 1

Property Code	9200 - EXEMPT NON-RESIDENTIAL LAND	Land Code	141_4_5 - Grazing E Federal - 4.5

Abstract Summary

Code	Classification	Actual Value Value	Taxable Value	Actual Value Override	Taxable Override
9200	EXEMPT NON-RESIDENTIAL LAND	$3,114	$1,038	NA	NA
Total		**$3,114**	**$1,038**	**NA**	**NA**

Property Record Card

Eddy Assessor

BUREAU OF LAND MANAGEMENT

Account: R094691

Tax Area: CO_NR - CARLSBAD-OUT (Nonresidential)

Acres: 0.000

Parcel: 4-177-126-263-264

Situs Address:

Value Summary

Value By:	Market	Override
Land (1)	$2,880	N/A
Total	**$2,880**	**$2,880**

Legal Description

Quarter: NE S: 33 T: 21S R: 30E Quarter: NW S: 33 T: 21S R: 30E Quarter: SW S: 33 T: 21S R: 30E Quarter: SE S: 33 T: 21S R: 30E ALL MAP# 207-33 LOC E OF CARLSBAD EXEMPT

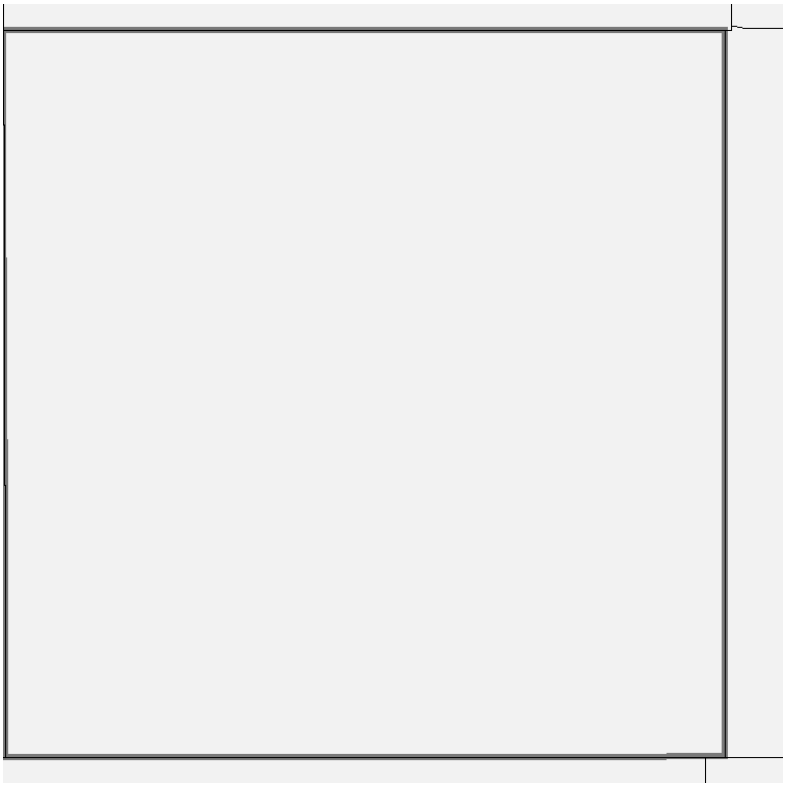

Land Occurrence 1

Property Code	9200 - EXEMPT NON-RESIDENTIAL LAND	Land Code	141_4_5 - Grazing E Federal - 4.5

Abstract Summary

Code	Classification	Actual Value Value	Taxable Value	Actual Value Override	Taxable Override
9200	EXEMPT NON-RESIDENTIAL LAND	$2,880	$960	NA	NA
Total		**$2,880**	**$960**	**NA**	**NA**

Property Record Card

Eddy Assessor

STATE OF NEW MEXICO
310 OLD SANTA FE TRAIL
SANTA FE, NM 87504

Account: R094703
Tax Area: CO_NR - CARLSBAD-OUT (Nonresidential)
Acres: 0.000

Parcel: 4-176-126-264-264
Situs Address:

Value Summary

Value By:	Market	Override
Land (1)	$2,880	N/A
Total	**$2,880**	**$2,880**

Legal Description

Quarter: NE S: 32 T: 21S R: 30E Quarter: NW S: 32 T: 21S R: 30E Quarter: SW S: 32 T: 21S R: 30E Quarter: SE S: 32 T: 21S R: 30E ALL MAP# 207-32 LOC E OF CARLSBAD EXEMPT

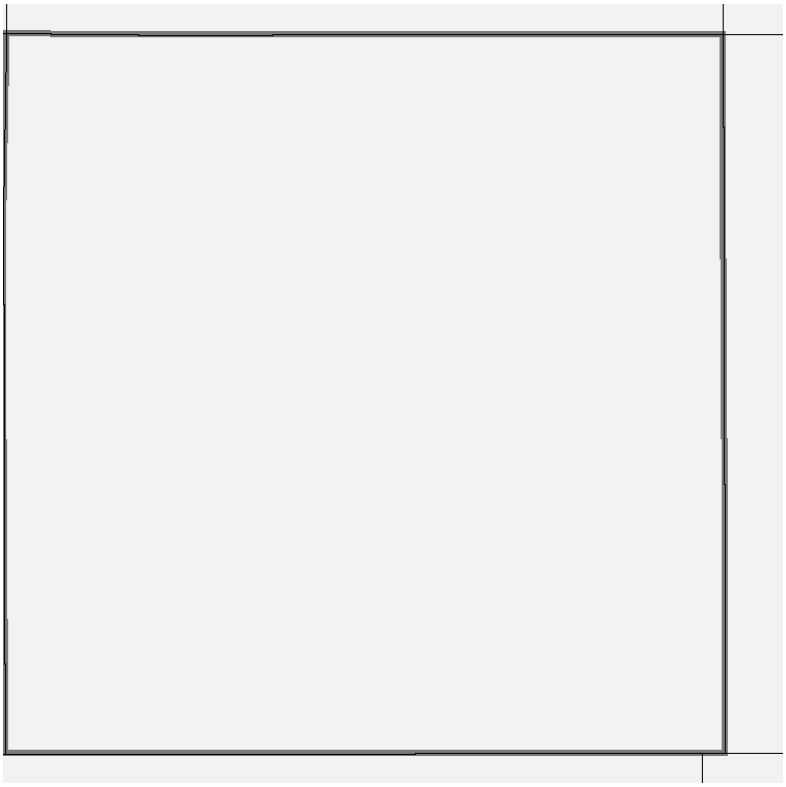

Land Occurrence 1

Property Code	9200 - EXEMPT NON-RESIDENTIAL LAND	Land Code	153_4_5 - Grazing E NM - 4.5

Abstract Summary

Code	Classification	Actual Value Value	Taxable Value	Actual Value Override	Taxable Override
9200	EXEMPT NON-RESIDENTIAL LAND	$2,880	$960	NA	NA
Total		**$2,880**	**$960**	**NA**	**NA**

Property Record Card

Eddy Assessor

BUREAU OF LAND MANAGEMENT

Account: R094783

Tax Area: CO_NR - CARLSBAD-OUT (Nonresidential)

Acres: 0.000

Parcel: 4-176-127-268-264

Situs Address:
POTASH MINES ROAD

Value Summary

Value By:	Market	Override
Land (1)	$2,934	N/A
Total	**$2,934**	**$2,934**

Legal Description

Quarter: NE S: 6 T: 22S R: 30E Quarter: NW S: 6 T: 22S R: 30E Quarter: SW S: 6 T: 22S R: 30E Quarter: SE S: 6 T: 22S R: 30E ALL MAP# 279-6 LOC E 1434 POTASH MINES RD EXEMPT

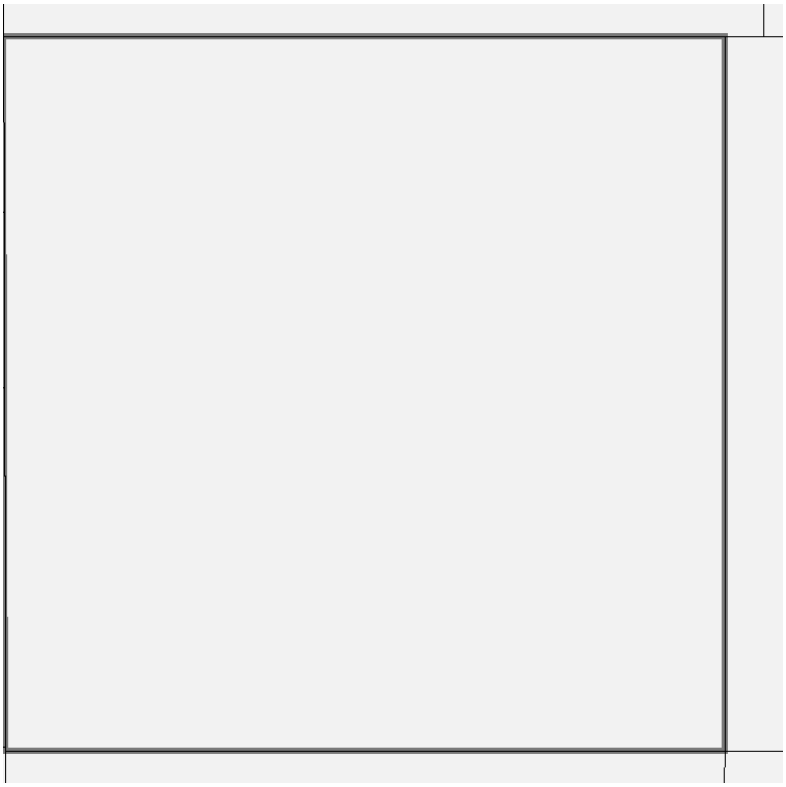

Land Occurrence 1

Property Code	9200 - EXEMPT NON-RESIDENTIAL LAND	Land Code	141_4_5 - Grazing E Federal - 4.5

Abstract Summary

Code	Classification	Actual Value Value	Taxable Value	Actual Value Override	Taxable Override
9200	EXEMPT NON-RESIDENTIAL LAND	$2,934	$978	NA	NA
Total		**$2,934**	**$978**	**NA**	**NA**

Property Record Card

Eddy Assessor

BUREAU OF LAND MANAGEMENT

Account: R094784

Tax Area: CO_NR - CARLSBAD-OUT (Nonresidential)

Acres: 0.000

Parcel: 4-175-128-268-263

Situs Address:

Value Summary

Value By:	Market	Override
Land (1)	$2,928	N/A
Total	**$2,928**	**$2,928**

Legal Description

Quarter: NE S: 7 T: 22S R: 30E Quarter: NW S: 7 T: 22S R: 30E Quarter: SW S: 7 T: 22S R: 30E Quarter: SE S: 7 T: 22S R: 30E ALL MAP# 279-7 LOC E OF CARLSBAD EXEMPT

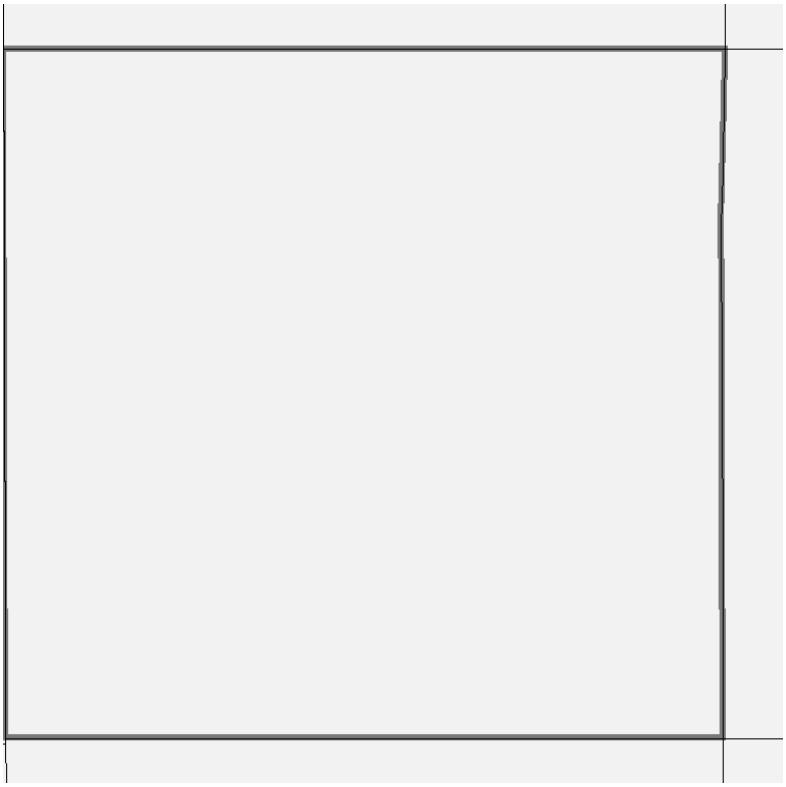

Land Occurrence 1

Property Code	9200 - EXEMPT NON-RESIDENTIAL LAND	Land Code	141_4_5 - Grazing E Federal - 4.5

Abstract Summary

Code	Classification	Actual Value Value	Taxable Value	Actual Value Override	Taxable Override
9200	EXEMPT NON-RESIDENTIAL LAND	$2,928	$976	NA	NA
Total		**$2,928**	**$976**	**NA**	**NA**

Property Record Card

Eddy Assessor

STATE OF NEW MEXICO
310 OLD SANTA FE TRAIL
SANTA FE, NM 87504

Account: R094808
Tax Area: CO_NR - CARLSBAD-OUT (Nonresidential)
Acres: 0.000

Parcel: 4-177-127-267-264
Situs Address:

Value Summary

Value By:	Market	Override
Land (1)	$2,922	N/A
Total	**$2,922**	**$2,922**

Legal Description

Quarter: NE S: 4 T: 22S R: 30E Quarter: NW S: 4 T: 22S R: 30E Quarter: SW S: 4 T: 22S R: 30E Quarter: SE S: 4 T: 22S R: 30E ALL MAP# 279-4 LOC E OF CARLSBAD EXEMPT

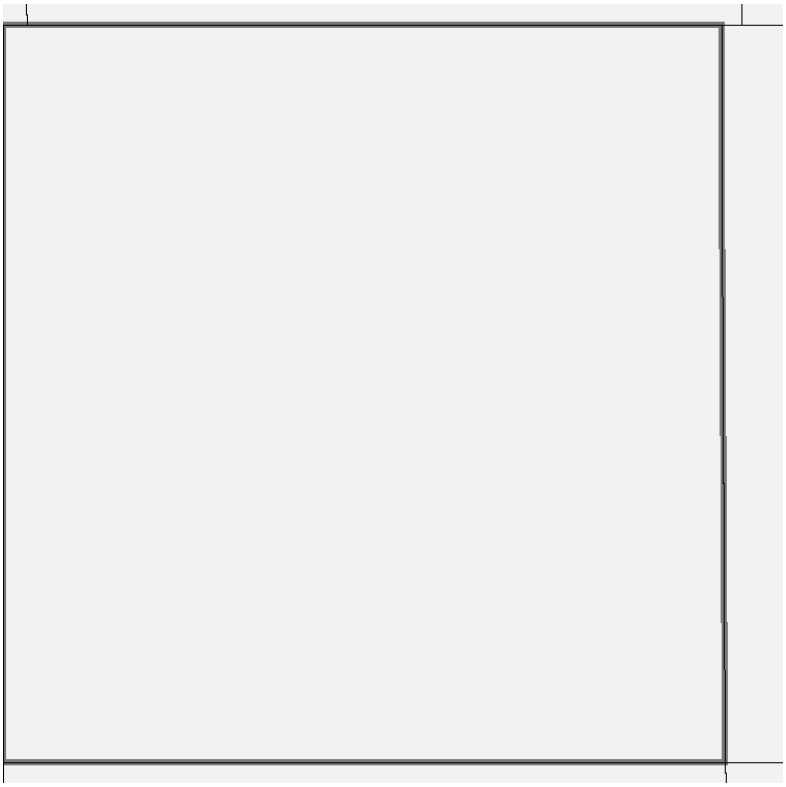

Land Occurrence 1

Property Code	9200 - EXEMPT NON-RESIDENTIAL LAND	Land Code	153_4_5 - Grazing E NM - 4.5

Abstract Summary

Code	Classification	Actual Value Value	Taxable Value	Actual Value Override	Taxable Override
9200	EXEMPT NON-RESIDENTIAL LAND	$2,922	$974	NA	NA
Total		**$2,922**	**$974**	**NA**	**NA**

Property Record Card

Eddy Assessor

STATE OF NEW MEXICO
310 OLD SANTA FE TRAIL
SANTA FE, NM 87504

Account: R094809
Tax Area: CO_NR - CARLSBAD-OUT (Nonresidential)
Acres: 0.000

Parcel: 4-176-127-267-264
Situs Address:

Value Summary

Value By:	Market	Override
Land (1)	$2,922	N/A
Total	**$2,922**	**$2,922**

Legal Description

Quarter: NE S: 5 T: 22S R: 30E Quarter: NW S: 5 T: 22S R: 30E Quarter: SW S: 5 T: 22S R: 30E Quarter: SE S: 5 T: 22S R: 30E ALL MAP# 279-5 LOC E OF CARLSBAD EXEMPT

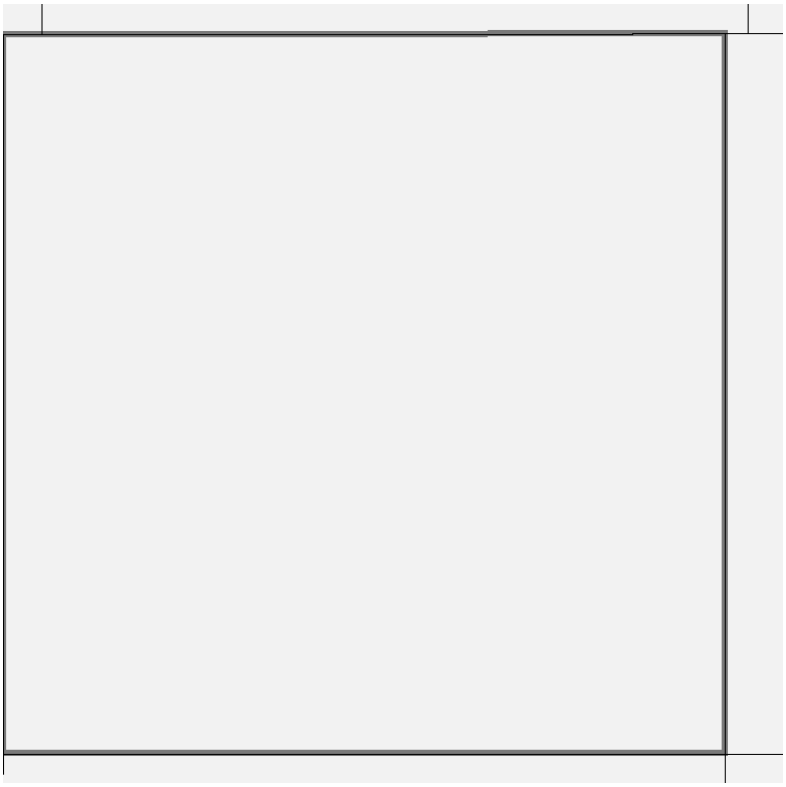

Land Occurrence 1

Property Code	9200 - EXEMPT NON-RESIDENTIAL LAND	Land Code	153_4_5 - Grazing E NM - 4.5

Abstract Summary

Code	Classification	Actual Value Value	Taxable Value	Actual Value Override	Taxable Override
9200	EXEMPT NON-RESIDENTIAL LAND	$2,922	$974	NA	NA
Total		**$2,922**	**$974**	**NA**	**NA**

Property Record Card

Eddy Assessor

STATE OF NEW MEXICO
310 OLD SANTA FE TRAIL
SANTA FE, NM 87504

Account: R094810
Tax Area: CO_NR - CARLSBAD-OUT (Nonresidential)
Acres: 0.000

Parcel: 4-176-128-267-263
Situs Address:

Value Summary

Value By:	Market	Override
Land (1)	$2,913	N/A
Total	**$2,913**	**$2,913**

Legal Description

Quarter: NE S: 8 T: 22S R: 30E Quarter: NW S: 8 T: 22S R: 30E Quarter: SW S: 8 T: 22S R: 30E Quarter: SE S: 8 T: 22S R: 30E ALL MAP# 279-8 LOC E OF CARLSBAD EXEMPT

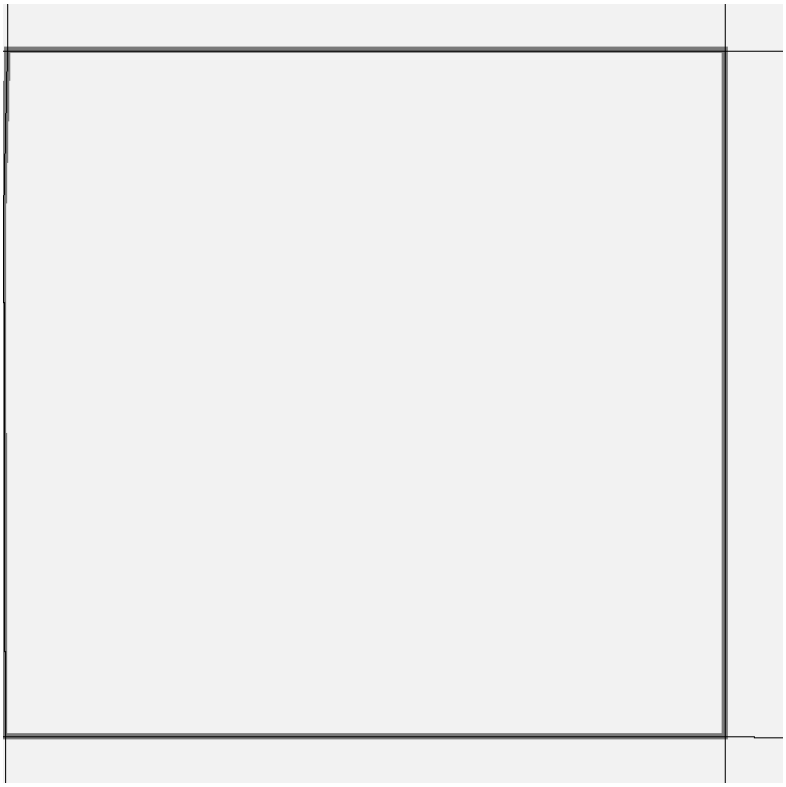

Land Occurrence 1

Property Code	9200 - EXEMPT NON-RESIDENTIAL LAND	Land Code	153_4_5 - Grazing E NM - 4.5

Abstract Summary

Code	Classification	Actual Value Value	Taxable Value	Actual Value Override	Taxable Override
9200	EXEMPT NON-RESIDENTIAL LAND	$2,913	$971	NA	NA
Total		**$2,913**	**$971**	**NA**	**NA**

Property Record Card

Eddy Assessor

STATE OF NEW MEXICO
310 OLD SANTA FE TRAIL
SANTA FE, NM 87504

Account: R094811
Tax Area: CO_NR - CARLSBAD-OUT (Nonresidential)
Acres: 0.000

Parcel: 4-177-128-268-263
Situs Address:

Value Summary

Value By:	Market	Override
Land (1)	$2,559	N/A
Total	**$2,559**	**$2,559**

Legal Description

Quarter: NE S: 9 T: 22S R: 30E Quarter: NW S: 9 T: 22S R: 30E Quarter: SW S: 9 T: 22S R: 30E Quarter: SE S: 9 T: 22S R: 30E N2, SW, W2SE MAP# 279-9 LOC E OF CARLSBAD EXEMPT

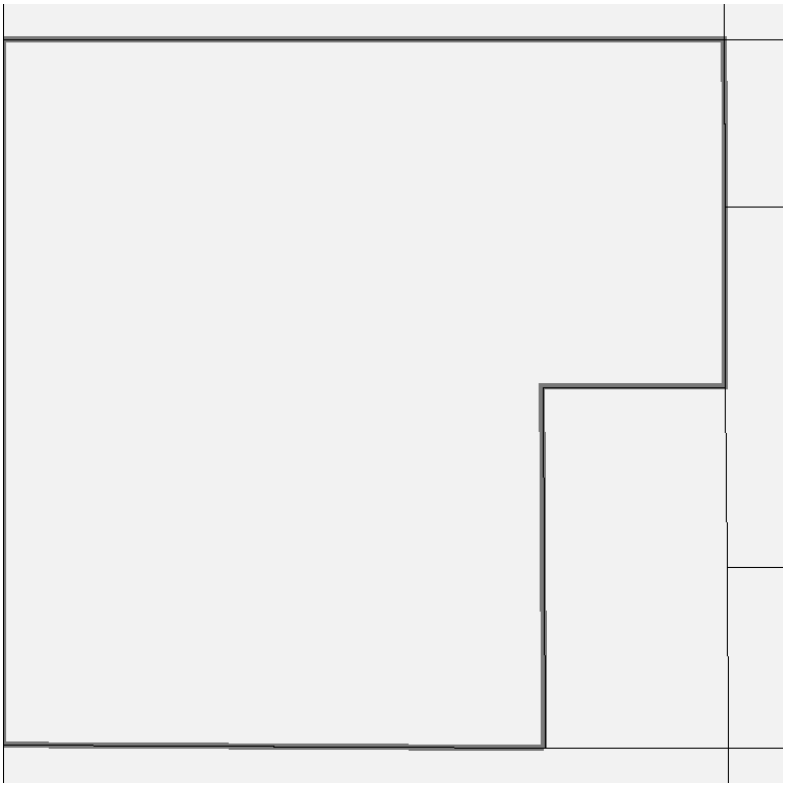

Land Occurrence 1

Property Code	9200 - EXEMPT NON-RESIDENTIAL LAND	Land Code	153_4_5 - Grazing E NM - 4.5

Abstract Summary

Code	Classification	Actual Value Value	Taxable Value	Actual Value Override	Taxable Override
9200	EXEMPT NON-RESIDENTIAL LAND	$2,559	$853	NA	NA
Total		**$2,559**	**$853**	**NA**	**NA**

Letters to Owners of Record and Applicable Counties, Municipalities, and Tribes

October 22, 2019

Certified Mail 7017 3040 000 9587 9596

Bureau of Land Management
620 E. Greene St.
Carlsbad, New Mexico, 88220-6292

RE: NSR Permit Application
Husky CDP
XTO Energy Inc.

Dear Federal Official,

In accordance with the application requirements of 20.2.72 NMAC, XTO Energy Inc. is providing notification of the planned construction of the Husky CDP near your property in Eddy County, NM. A public notice will be posted in the Carlsbad Current Argus newspaper, at the proposed site location, and three other locations in Carlsbad, NM. A copy of the notice is attached. Please contact me at (832) 625-0106 or ethan_boor@xtoenergy.com should you have any questions.

Sincerely,

Ethan Boor
Environmental Engineer

Attachment: Public Notice

October 22, 2019

Certified Mail 7017 3040 0000 9587 9602

Eddy County Manager
101 W. Greene St.
Suite 110
Carlsbad, New Mexico, 88220

RE: NSR Permit Application
Husky CDP
XTO Energy Inc.

Dear County Manager,

In accordance with the application requirements of 20.2.72 NMAC, XTO Energy Inc. is providing notification of the planned construction of the Husky CDP near your property in Eddy County, NM. A public notice will be posted in the Carlsbad Current Argus newspaper, at the proposed site location, and three other locations in Carlsbad, NM. A copy of the notice is attached. Please contact me at (832) 625-0106 or ethan_boor@xtoenergy.com should you have any questions.

Sincerely,

Ethan Boor
Environmental Engineer

Attachment: Public Notice

October 22, 2019

Certified Mail 7017 3040 0000 9587 9619

Lea County Manager
100 N. Main Avenue
Suite 4
Lovington, New Mexico, 88260

RE: NSR Permit Application
Husky CDP
XTO Energy Inc.

Dear County Manager,

In accordance with the application requirements of 20.2.72 NMAC, XTO Energy Inc. is providing notification of the planned construction of the Husky CDP near your property in Eddy County, NM. A public notice will be posted in the Carlsbad Current Argus newspaper, at the proposed site location, and three other locations in Carlsbad, NM. A copy of the notice is attached. Please contact me at (832) 625-0106 or ethan_boor@xtoenergy.com should you have any questions.

Sincerely,

Ethan Boor
Environmental Engineer

Attachment: Public Notice

October 22, 2019

Certified Mail 7017 3040 000 9587 9626

State of New Mexico Land Office
310 Old Santa Fe Trail
Santa Fe, New Mexico, 87501

RE: NSR Permit Application
Husky CDP
XTO Energy Inc.

Dear Commissioner,

In accordance with the application requirements of 20.2.72 NMAC, XTO Energy Inc. is providing notification of the planned construction of the Husky CDP on your property in Eddy County, NM. A public notice will be posted in the Artesia Daily Press newspaper, at the proposed site location, and three other locations in Carlsbad, NM. A copy of the notice is attached. Please contact me at (832) 625-0106 or ethan_boor@xtoenergy.com should you have any questions.

Sincerely,

Ethan Boor
Environmental Engineer

Attachment: Public Notice

NOTICE OF AIR QUALITY PERMIT APPLICATION

XTO Energy Inc. announces its application to the New Mexico Environment Department for an air quality permit for the construction of a natural gas central processing and oil/natural gas liquid (NGL) central delivery point. The application will be submitted to the Air Quality Bureau around October 24, 2019.

The exact location for the facility known as the Husky CDP will be latitude 32 deg, 25 min, 21 sec and longitude -103 deg, 54 min, 5 sec. The approximate location of this facility is 14.3 miles northeast of Loving in Eddy County, New Mexico. The proposed facility consists of hot oil heaters, regen heaters, thermal oxidizers, a combustor, emergency flares, internal floating roof tanks, fixed roof tanks, gas fired turbines, and loading operations.

The estimated maximum quantities of any regulated air contaminants will be as follows in pound per hour (pph) and tons per year (tpy). These reported emissions could change slightly during the course of the Department's review:

Pollutant:	Pounds per hour	Tons per year
Total Suspended Particulates (TSP)	55	210
PM_{10}	55	205
$PM_{2.5}$	55	205
Sulfur Dioxide (SO_2)	15	55
Nitrogen Oxides (NO_x)	170	280
Carbon Monoxide (CO)	265	265
Volatile Organic Compounds (VOC)	500	500
Total sum of all Hazardous Air Pollutants (HAPs)	25	30
Toxic Air Pollutant (TAP)	70	310
Green House Gas Emissions as Total CO_2e	n/a	2,700,000

The standard and maximum operating schedule of the facility will be 24 hours per day, 7 days a week and a maximum of 52 weeks per year. The owner and/or operator of the Facility is: XTO Energy, Inc.; 22777 Springwoods Village Pkwy-W4.6B.355; Spring, Texas 77389.

If you have any comments about the construction or operation of this facility, and you want your comments to be made as part of the permit review process, you must submit your comments in writing to this address: Permit Programs Manager; New Mexico Environment Department; Air Quality Bureau; 525 Camino de los Marquez, Suite 1; Santa Fe, New Mexico; 87505-1816; (505) 476-4300; 1 800 224-7009; https://www.env.nm.gov/aqb/permit/aqb_draft_permits.html. Other comments and questions may be submitted verbally.

With your comments, please refer to the company name and facility name, or send a copy of this notice along with your comments. This information is necessary since the Department may have not yet received the permit application. Please include a legible return mailing address. Once the Department has completed its preliminary review of the application and its air quality impacts, the Department's notice will be published in the legal section of a newspaper circulated near the facility location.

Attención

Este es un aviso de la oficina de Calidad del Aire del Departamento del Medio Ambiente de Nuevo México, acerca de las emisiones producidas por un establecimiento en esta área. Si usted desea información en español, por favor comuníquese con esa oficina al teléfono 505-476-5557.

Notice of Non-Discrimination

NMED does not discriminate on the basis of race, color, national origin, disability, age or sex in the administration of its programs or activities, as required by applicable laws and regulations. NMED is responsible for coordination of compliance efforts and receipt of inquiries concerning non-discrimination requirements implemented by 40 C.F.R. Part 7, including Title VI of the Civil Rights Act of 1964, as amended; Section 504 of the Rehabilitation Act of 1973; the Age Discrimination Act of 1975, Title IX of the Education Amendments of 1972, and Section 13 of the Federal Water Pollution Control Act Amendments of 1972. If you have any questions about this notice or any of NMED's non-discrimination programs, policies or procedures, or if you believe that you have been discriminated against with respect to a NMED program or activity, you may contact: Kristine Yurdin, Non-Discrimination Coordinator, NMED, 1190 St. Francis Dr., Suite N4050, P.O. Box 5469, Santa Fe, NM 87502, (505) 827-2855, nd.coordinator@state.nm.us. You may also visit our website at https://www.env.nm.gov/non-employee-discrimination-complaint-page/ to learn how and where to file a complaint of discrimination.

Sample of Notice posted and

Verification of Postings

NOTICE

XTO Energy Inc. announces its application to the New Mexico Environment Department for an air quality permit for the construction of a natural gas central processing and oil/natural gas liquid (NGL) central delivery point. The application will be submitted to the Air Quality Bureau around October 24, 2019. The exact location for the facility known as the Husky CDP will be latitude 32 deg, 25 min, 21 sec and longitude -103 deg, 54 min, 5 sec. The approximate location of this facility is 14.3 miles northeast of Loving in Eddy County, New Mexico. The proposed facility consists of hot oil heaters, regen heaters, thermal oxidizers, a combustor, emergency flares, internal floating roof tanks, fixed roof tanks, gas fired turbines, and loading operations.

The estimated maximum quantities of any regulated air contaminants will be as follows in pound per hour (pph) and tons per year (tpy). These reported emissions could change slightly during the course of the Department's review:

Pollutant:	Pounds per hour	Tons per year
Total Suspended Particulates (TSP)	55	210
PM_{10}	55	205
$PM_{2.5}$	55	205
Sulfur Dioxide (SO_2)	15	55
Nitrogen Oxides (NO_x)	170	280
Carbon Monoxide (CO)	265	265
Volatile Organic Compounds (VOC)	500	500
Total sum of all Hazardous Air Pollutants (HAPs)	25	30
Toxic Air Pollutant (TAP)	70	310
Green House Gas Emissions as Total CO_2e	n/a	2,700,000

The standard and maximum operating schedule of the facility will be 24 hours per day, 7 days a week and a maximum of 52 weeks per year. The owner and/or operator of the Facility is: XTO Energy, Inc.; 22777 Springwoods Village Pkwy-W4.6B.355; Spring, Texas 77389.

If you have any comments about the construction or operation of this facility, and you want your comments to be made as part of the permit review process, you must submit your comments in writing to this address: Permit Programs Manager; New Mexico Environment Department; Air Quality Bureau; 525 Camino de los Marquez, Suite 1; Santa Fe, New Mexico; 87505-1816; (505) 476-4300; 1 800 224-7009; https://www.env.nm.gov/aqb/permit/aqb_draft_permits.html. Other comments and questions may be submitted verbally.

With your comments, please refer to the company name and facility name, or send a copy of this notice along with your comments. This information is necessary since the Department may have not yet received the permit application. Please include a legible return mailing address. Once the Department has completed its preliminary review of the application and its air quality impacts, the Department's notice will be published in the legal section of a newspaper circulated near the facility location.

Attención

Este es un aviso de la oficina de Calidad del Aire del Departamento del Medio Ambiente de Nuevo México, acerca de las emisiones producidas por un establecimiento en esta área. Si usted desea información en español, por favor comuníquese con esa oficina al teléfono 505-476-5557.

Notice of Non-Discrimination

NMED does not discriminate on the basis of race, color, national origin, disability, age or sex in the administration of its programs or activities, as required by applicable laws and regulations. NMED is responsible for coordination of compliance efforts and receipt of inquiries concerning non-discrimination requirements implemented by 40 C.F.R. Part 7, including Title VI of the Civil Rights Act of 1964, as amended; Section 504 of the Rehabilitation Act of 1973; the Age Discrimination Act of 1975, Title IX of the Education Amendments of 1972, and Section 13 of the Federal Water Pollution Control Act Amendments of 1972. If you have any questions about this notice or any of NMED's non-discrimination programs, policies or procedures, or if you believe that you have been discriminated against with respect to a NMED program or activity, you may contact: Kristine Yurdin, Non-Discrimination Coordinator, NMED, 1190 St. Francis Dr., Suite N4050, P.O. Box 5469, Santa Fe, NM 87502, (505) 827-2855, nd.coordinator@state.nm.us. You may also visit our website at https://www.env.nm.gov/non-employee-discrimination-complaint-page/ to learn how and where to file a complaint of discrimination.

Noticed Citizens, Counties, Municipalities, and Tribes

Eddy County: Eddy County Manager

Lea County: Lea County Manager

Bureau Of Land Management: BLM Carlsbad Field Office

State of NM: Commissioner

Public Service Announcement Documentation

Submittal of Public Service Announcement – Certification

I, Evan Tullos, the undersigned, certify that on **October 23, 2019**, submitted a public service announcement to **Carlsbad Radio** that serves Carlsbad, **Eddy** County, New Mexico, in which the source is or is proposed to be located and that Carlsbad Radio did not respond regarding the airing of the announcement.

Signed this 23rd day of October, 2019,



Signature

10/23/19
Date

Evan Tullos
Printed Name

Vice President - Consultant for XTO Energy
Title {APPLICANT OR RELATIONSHIP TO APPLICANT}

Portnoy Environmental, Inc

Phone: (281) 705-3926
Fax: (832) 295-6404

Fax

To: KATK FM

From: Evan Tullos

Fax: 5758877000

Pages: 3

Re: PSA for XTO Husky CDP

Date: October 23, 2019

Please review the attached PSA request. I can be reached at (865) 850-2007.

Thank you.

1414 W. Sam Houston Pkwy N, #170, Houston, TX 77043

October 23, 2019

KATK 92.1 FM
(575) 887-7000

Re: Public Service Announcement

As part of the air quality permitting process in New Mexico, applicants for certain air permits must attempt to provide notice to the public of the proposed permit action via public service announcement (PSA). The announcement is attached. Will you air the PSA? Thank you.

Evan Tullos
PEI
(865) 850-2007

NOTICE OF AIR QUALITY PERMIT APPLICATION

XTO Energy, Inc. announces its application to the New Mexico Environment Department for an air quality permit for the construction of the Husky CDP. The expected date of application submittal to the Air Quality Bureau is October 24, 2019. This will be a newly constructed natural gas central processing and oil/natural gas liquid (NGL) central delivery point.

The exact location for this site will be latitude 32 deg, 25 min, 21 sec and longitude -103 deg, 54 min, 5 sec. The approximate location of this facility is 14.3 miles northeast of Loving in Eddy County, New Mexico.

The notice was posted at the facility and three other public locations in Carlsbad such as the library, post office, and grocery store. If you have any comments about the construction or operation of the above facility, and you want your comments to be made as part of the permit review process, you must submit your comments in writing to the address below:

Permit Programs Manager
New Mexico Environment Department
Air Quality Bureau
525 Camino de los Marquez, Suite 1
Santa Fe, New Mexico 87505-1816
(505) 476-4300

Transmission Status

Your transmission has completed.

DOC Identifier : 57964981
Fax Number : 5758877000
Recipient : KATK FM
Status Classification : "Success"
Status Outcome : "Success"
Last Attempt Date : 10/23/2019
Last Attempt Time : 10:12:56
Pages Scheduled : 3
Pages Sent : 3
Baud Rate : 31200
Duration (in seconds) : 43
Number of Retries : 1
Remote CSID : "15758877000"

Cover page

Public Service Announcement_Husky.pdf

Legal Ad

Carlsbad Current Argus.

Affidavit of Publication

Ad # 0003857141

PORTNOY ENVIRONMENTA L, INC.
5 CARDINAL CT

EDWARDSVILLE, IL 62025

I, a legal clerk of the **Carlsbad Current Argus**, a newspaper published daily at the City of Carlsbad, in said county of Eddy, state of New Mexico and of general paid circulation in said county; that the same is a duly qualified newspaper under the laws of the State wherein legal notices and advertisements may be published; that the printed notice attached hereto was published in the regular and entire edition of said newspaper and not in supplement thereof on the date as follows, to wit:

October 22, 2019

Legal Clerk

Subscribed and sworn before me this October 22, 2019:

State of WI, County of Brown
NOTARY PUBLIC

9-19-21
My commission expires

VICKY FELTY
NOTARY
PUBLIC
STATE OF WISCONSIN

Ad # 0003857141
PO #: Husky CDP
# of Affidavits : 1

NOTICE OF AIR QUALITY PERMIT APPLICATION

XTO Energy Inc. announces its application to the New Mexico Environment Department for an air quality permit for the construction of a natural gas central processing and oil/natural gas liquid (NGL) central delivery point. The application will be submitted to the Air Quality Bureau around October 24, 2019.

The exact location for the facility known as the Husky CDP will be latitude 32 deg, 25 min, 21 sec and longitude -103 deg, 54 min, 5 sec. The approximate location of this facility is 14.3 miles northeast of Loving in Eddy County, New Mexico. The proposed facility consists of hot oil heaters, regen heaters, thermal oxidizers, a combustor, emergency flares, internal floating roof tanks, fixed roof tanks, gas fired turbines, and loading operations.

The estimated maximum quantities of any regulated air contaminants will be as follows in pound per hour (pph) and tons per year (tpy). These reported emissions could change slightly during the course of the Department's review:

Pollutant:	Pounds per hour	Tons per year
Total Suspended Particulates (TSP)	55	210
PM 10	55	205
PM 2.5	55	205
Sulfur Dioxide (SO2)	15	55
Nitrogen Oxides (NOx)	170	280
Carbon Monoxide (CO)	265	265
Volatile Organic Compounds (VOC)	500	500
Total sum of all Hazardous Air Pollutants (HAPs)	25	30
Toxic Air Pollutant (TAP)	70	310
Green House Gas Emissions as Total CO2e	n/a	2,700,000

The standard and maximum operating schedule of the facility will be 24 hours per day, 7 days a week and a maximum of 52 weeks per year. The owner and/or operator of the Facility is: XTO Energy, Inc.; 22777 Springwoods Village Pkwy-W4.6B.355; Spring, Texas 77389.

If you have any comments about the construction or operation of this facility, and you want your comments to be made as part of the permit review process, you must submit your comments in writing to this address: Permit Programs Manager; New Mexico Environment Department; Air Quality Bureau; 525 Camino de los Marquez, Suite 1; Santa Fe, New Mexico; 87505-1816; (505) 476-4300; 1 800 224-7009; https://www.env.nm.gov/aqb/permit/aqb_draft_permits.html. Other comments and questions may be submitted verbally.

With your comments, please refer to the company name and facility name, or send a copy of this notice along with your comments. This information is necessary since the Department may have not yet received the permit application. Please include a legible return mailing address. Once the Department has completed its preliminary review of the application and its air quality impacts, the Department's notice will be published in the legal section of a newspaper circulated near the facility location.

Attención

Este es un aviso de la oficina de Calidad del Aire del Departamento del Medio Ambiente de Nuevo México, acerca de las emisiones producidas por un establecimiento en esta área. Si usted desea información en español, por favor comuníquese con esa oficina al teléfono 505-476-5557.

Notice of Non-Discrimination

NMED does not discriminate on the basis of race, color, national origin, disability, age or sex in the administration of its programs or activities, as required by applicable laws and regulations. NMED is responsible for coordination of compliance efforts and receipt of inquiries concerning non-discrimination requirements implemented by 40 C.F.R. Part 7, including Title VI of the Civil Rights Act of 1964, as amended; Section 504 of the Rehabilitation Act of 1973; the Age Discrimination Act of 1975, Title IX of the Education Amendments of 1972, and Section 13 of the Federal Water Pollution Control Act Amendments of 1972. If you have any questions about this notice or any of NMED's non-discrimination programs, policies or procedures, or if you believe that you have been discriminated against with respect to a NMED program or activity, you may contact: Kristine Yurdin, Non-Discrimination Coordinator, NMED, 1190 St. Francis Dr., Suite N4050, P.O. Box 5469, Santa Fe, NM 87502, (505) 827-2855, nd.coordinator@state.nm.us. You may also visit our website at https://www.env.nm.gov/non-employee-discrimination-complaint-page/ to learn how and where to file a complaint of discrimination.

#3857141, Current Argus, Oct. 22, 2019

Display Ad

CARLSBAD
CURRENT-ARGUS

AFFIDAVIT OF PUBLICATION

Ad No.
GCI0294613

PORTNOY ENVIRONMENTAL, INC.
5 CARDINAL CT
EDWARDSVILLE, IL 62025

I, a legal clerk of the Carlsbad Current-Argus, a newspaper published daily at the City of Carlsbad, in said county of Eddy, state of New Mexico and of general paid circulation in said county; that the same is a duly qualified newspaper under the laws of the State wherein legal notices and advertisements may be published; that the printed notice attached hereto was published in the regular and entire edition of said newspaper and not in supplement thereof on the date as follows, to wit:

10/22/19

Kathleen Allen
Legal Clerk

Subscribed and sworn before me this
22nd of October 2019.

Vicky Felty
State of WI, County of Brown
NOTARY PUBLIC

9-19-22
My Commission Expires

VICKY FELTY
NOTARY
PUBLIC
STATE OF WISCONSIN

Ad#: GCI0294613
P O :
# of Affidavits : 1

NOTICE OF AIR QUALITY PERMIT APPLICATION

XTO Energy Inc. announces its application to the New Mexico Environment Department for an air quality permit for the construction of a natural gas central processing and oil/ natural gas liquid (NGL) central delivery point. The application will be submitted to the Air Quality Bureau around October 24, 2019.

The exact location for the facility known as the Husky CDP will be latitude 32 deg, 25 min, 21 sec and longitude -103 deg, 54 min, 5 sec. The approximate location of this facility is 14.3 miles northeast of Loving in Eddy County, New Mexico. The proposed facility consists of hot oil heaters, regen heaters, thermal oxidizers, a combustor, emergency flares, internal floating roof tanks, fixed roof tanks, gas fired turbines, and loading operations.

The estimated maximum quantities of any regulated air contaminants will be as follows in pound per hour (pph) and tons per year (tpy). These reported emissions could change slightly during the course of the Department's review:

Pollutant:	Pounds per hour	Tons per year
Total Suspended Particulates (TSP)	55	210
PM_{10}	55	205
$PM_{2.5}$	55	205
Sulfur Dioxide (SO_2)	15	55
Nitrogen Oxides (NO_x)	170	280
Carbon Monoxide (CO)	265	265
Volatile Organic Compounds (VOC)	500	500
Total sum of all Hazardous Air Pollutants (HAPs)	25	30
Toxic Air Pollutant (TAP)	70	310
Green House Gas Emissions as Total CO_{2e}	n/a	2,700,000

The standard and maximum operating schedule of the facility will be 24 hours per day, 7 days a week and a maximum of 52 weeks per year. The owner and/or operator of the Facility is: XTO Energy, Inc.; 22777 Springwoods Village Pkwy-W4.6B.355; Spring, Texas 77389.

If you have any comments about the construction or operation of this facility, and you want your comments to be made as part of the permit review process, you must submit your comments in writing to this address: Permit Programs Manager; New Mexico Environment Department; Air Quality Bureau; 525 Camino de los Marquez, Suite 1; Santa Fe, New Mexico; 87505-1816; (505) 476-4300; 1 800 224-7009; https://www.env.nm.gov/aqb/permit/aqb_draft_permits.html. Other comments and questions may be submitted verbally.

With your comments, please refer to the company name and facility name, or send a copy of this notice along with your comments. This information is necessary since the Department may have not yet received the permit application. Please include a legible return mailing address. Once the Department has completed its preliminary review of the application and its air quality impacts, the Department's notice will be published in the legal section of a newspaper circulated near the facility location.

Attención

Este es un aviso de la oficina de Calidad del Aire del Departamento del Medio Ambiente de Nuevo México. acerca de las emisiones producidas por un establecimiento en esta área. Si usted desea información en español, por favor comuníquese con esa oficina al teléfono 505-476-5557.

Notice of Non-Discrimination

NMED does not discriminate on the basis of race, color, national origin, disability, age or sex in the administration of its programs or activities, as required by applicable laws and regulations. NMED is responsible for coordination of compliance efforts and receipt of inquiries concerning non-discrimination requirements implemented by 40 C.F.R. Part 7, including Title VI of the Civil Rights Act of 1964, as amended; Section 504 of the Rehabilitation Act of 1973; the Age Discrimination Act of 1975, Title IX of the Education Amendments of 1972, and Section 13 of the Federal Water Pollution Control Act Amendments of 1972. If you have any questions about this notice or any of NMED's non-discrimination programs, policies or procedures, or if you believe that you have been discriminated against with respect to a NMED program or activity, you may contact: Kristine Yurdin, Non-Discrimination Coordinator, NMED, 1190 St. Francis Dr., Suite N4050, P.O. Box 5469, Santa Fe, NM 87502, (505) 827-2855, nd.coordinator@state.nm.us. You may also visit our website at https://www.env.nm.gov/non-employee-discrimination-complaint-page/ to learn how and where to file a complaint of discrimination.

TX-GCI0294613-01

Eddy County Property Tax Map



Legend

- Roads
- Railroads
- Water
- Geographic
- Section
- Subdivision
- Parcel

Husky Surrounding Properties

Web Print: 10/22/2019

0 3,009 6,019 Feet

This map is a user generated static output from an Internet mapping site and is for reference only. Data layers that appear on this map may or may not be accurate, current, or otherwise reliable.

©2019 Sidwell. All rights reserved.



OBJECTID_12_13_14: 32495
UPC: 4-176-127-268-264
UPC_join: 4176127268264
ACCOUNTNUMBER: R094783
LEGALSUMMARY: Quarter: NE S: 6 T: 22S R: 30E Quarter: NW S: 6 T: 22S R: 30E Quarter: SW S: 6 T: 22S R: 30E Quarter: SE S: 6 T: 22S R: 30E ALL MAP# 279-6 LOC E 1434 POTASH MINES RD EXEMPT
OWNERNAME: BUREAU OF LAND MANAGEMENT
SITUS: POTASH MINES ROAD
LANDACTUAL: 2934
OBJECTID_1: 63292
TAXYEAR_1: 2019
ACCOUNTNUMBER_1: R094783
SEQUENCE_R: 0
OWNER_OCCURENCE: 0
INTERNALID: C20160020093.1451631600000
DOCUMEN_TTYPE: Owner
ACTIVE_1: A
CONFIDENTIAL: 0
OWNERID_1: C20160020093
OBJECTID_12: 52849
TAXYEAR_12: 2019
ACCOUNTNUMBER_12: R094783
SEQUENCE_R_1: 0
INTERNALID_1: R094783.LAND2768726.1511267090314
MODEL_TYPE: Land
ACCOUNTNUMBER_12_13: R094783
ACTUALAREA: 652.3
LANDCODE: 141_4_5
TAXAREA: CO_NR
VERSIONEND_1: 9223372036854775807
VERSIONSTART_1: 1511267090314

This map is a user generated static output from an Internet mapping site and is for reference only. Data layers that appear on this map may or may not be accurate, current, or otherwise reliable.

©2019 Sidwell. All rights reserved.

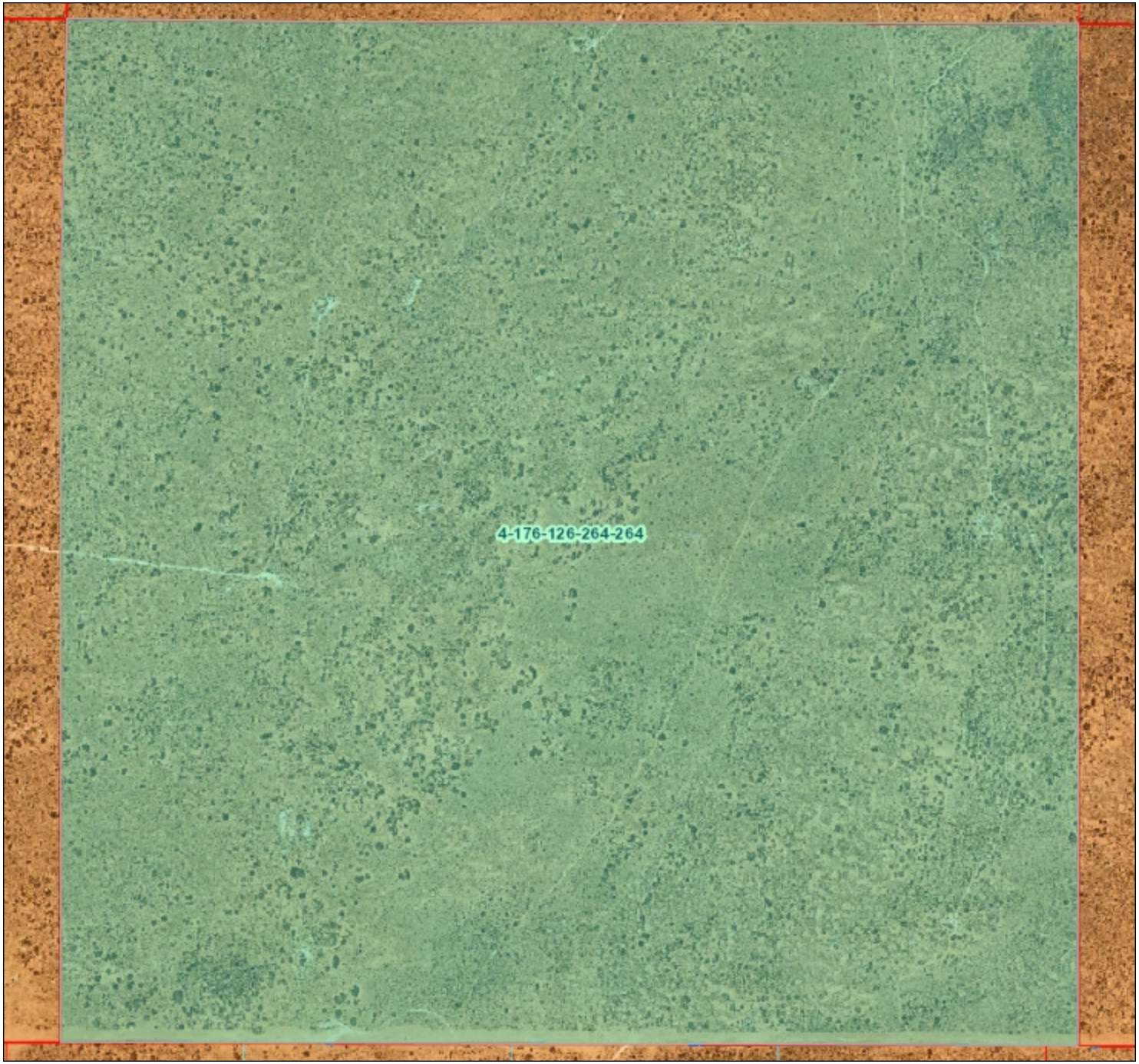

OBJECTID_12_13_14: 5582
UPC: 4-176-126-264-264
UPC_join: 4176126264264
ACCOUNTNUMBER: R094703
LEGALSUMMARY: Quarter: NE S: 32 T: 21S R: 30E Quarter: NW S: 32 T: 21S R: 30E Quarter: SW S: 32 T: 21S R: 30E Quarter: SE S: 32 T: 21S R: 30E ALL MAP# 207-32 LOC E OF CARLSBAD EXEMPT
OWNERNAME: STATE OF NEW MEXICO
LANDACTUAL: 2880
OBJECTID_1: 63222
TAXYEAR_1: 2019
ACCOUNTNUMBER_1: R094703
SEQUENCE_R: 0
OWNER_OCCURENCE: 0
INTERNALID: C20160020105.1451631600000
DOCUMEN_TTYPE: Owner
ACTIVE_1: A
CONFIDENTIAL: 0
OWNERADDRESS_ADDRESS1: 310 OLD SANTA FE TRAIL
OWNERADDRESS_CITY: SANTA FE
OWNERADDRESS_STATE: NM
OWNERADDRESS_ZIP: 87504
OWNERID_1: C20160020105
OBJECTID_12: 52777
TAXYEAR_12: 2019
ACCOUNTNUMBER_12: R094703
SEQUENCE_R_1: 0
INTERNALID_1: R094703.LAND2769326.1511267047099
MODEL_TYPE: Land
ACCOUNTNUMBER_12_13: R094703
ACTUALAREA: 640
LANDCODE: 153_4_5
TAXAREA: CO_NR
VERSIONEND_1: 9223372036854775807
VERSIONSTART_1: 1511267047099

This map is a user generated static output from an Internet mapping site and is for reference only. Data layers that appear on this map may or may not be accurate, current, or otherwise reliable.

©2019 Sidwell. All rights reserved.

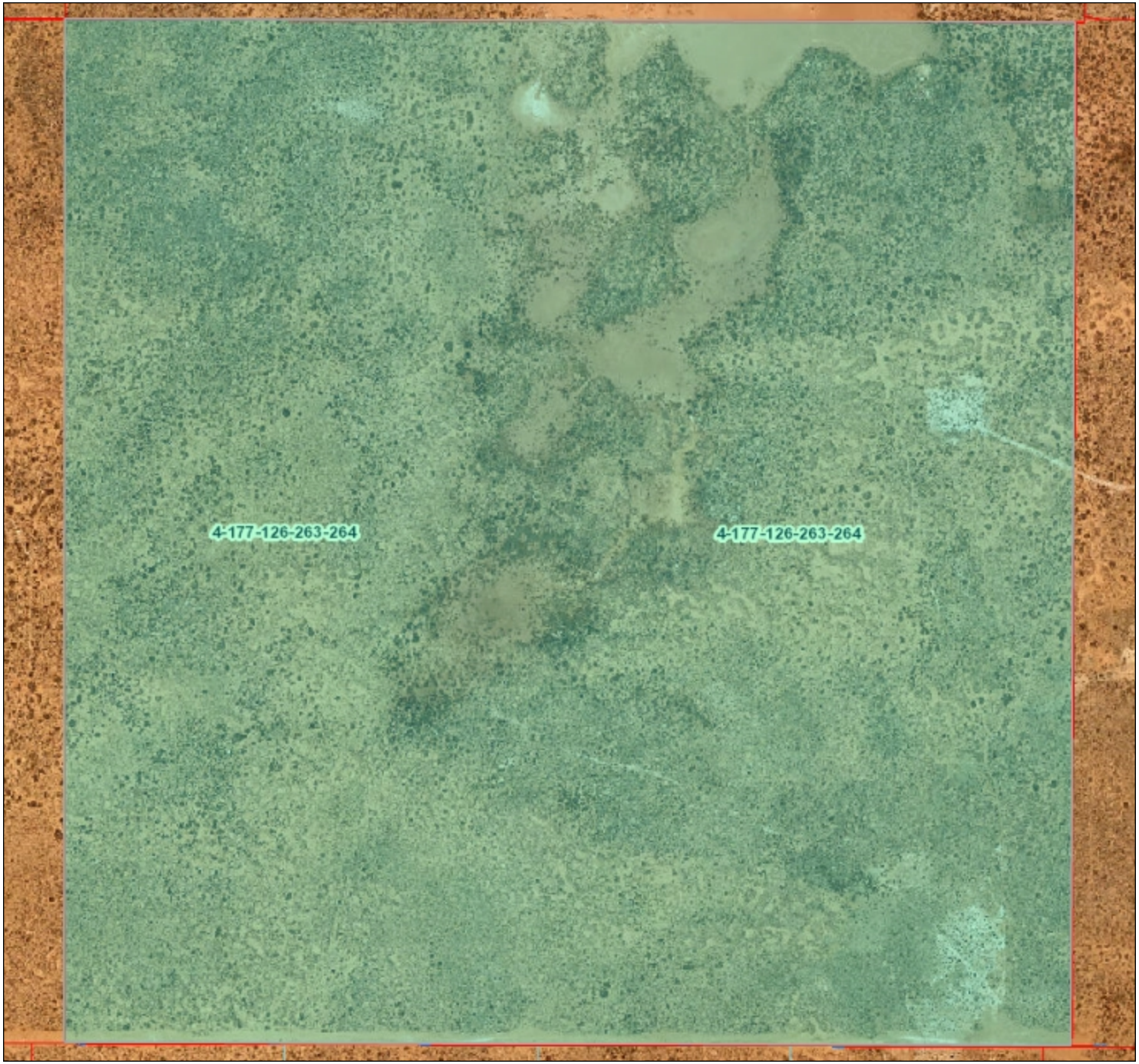

OBJECTID_12_13_14: 5600
UPC: 4-177-126-263-264
UPC_join: 4177126263264
ACCOUNTNUMBER: R094691
LEGALSUMMARY: Quarter: NE S: 33 T: 21S R: 30E Quarter: NW S: 33 T: 21S R: 30E Quarter: SW S: 33 T: 21S R: 30E Quarter: SE S: 33 T: 21S R: 30E ALL MAP# 207-33 LOC E OF CARLSBAD EXEMPT
OWNERNAME: BUREAU OF LAND MANAGEMENT
LANDACTUAL: 2880
OBJECTID_1: 63210
TAXYEAR_1: 2019
ACCOUNTNUMBER_1: R094691
SEQUENCE_R: 0
OWNER_OCCURENCE: 0
INTERNALID: C20160020093.1451631600000
DOCUMEN_TTYPE: Owner
ACTIVE_1: A
CONFIDENTIAL: 0
OWNERID_1: C20160020093
OBJECTID_12: 52765
TAXYEAR_12: 2019
ACCOUNTNUMBER_12: R094691
SEQUENCE_R_1: 0
INTERNALID_1: R094691.LAND2768914.1511267039515
MODEL_TYPE: Land
ACCOUNTNUMBER_12_13: R094691
ACTUALAREA: 640
LANDCODE: 141_4_5
TAXAREA: CO_NR
VERSIONEND_1: 9223372036854775807
VERSIONSTART_1: 1511267039515

This map is a user generated static output from an Internet mapping site and is for reference only. Data layers that appear on this map may or may not be accurate, current, or otherwise reliable.

©2019 Sidwell. All rights reserved.

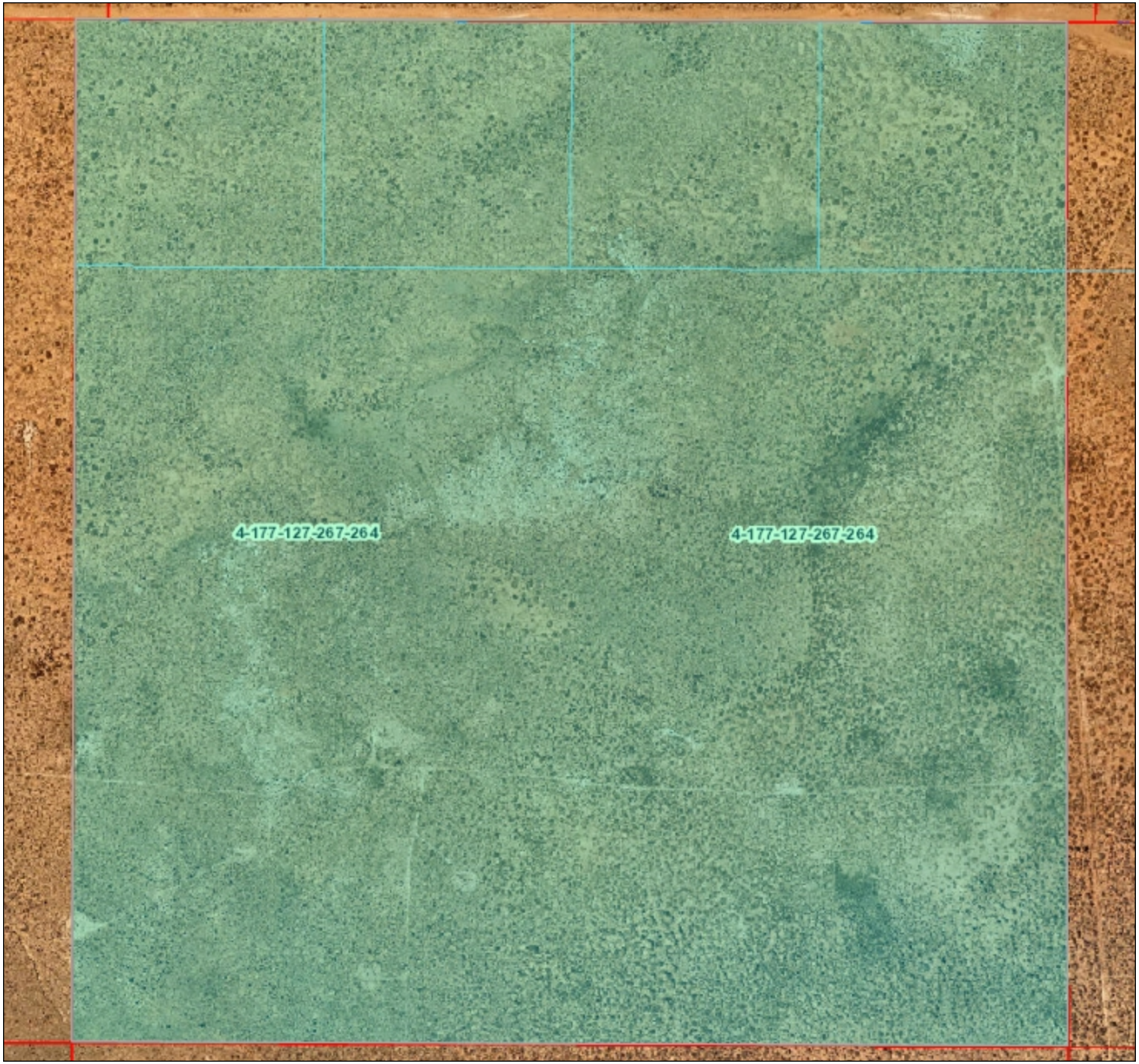

OBJECTID_12_13_14: 20963
UPC: 4-177-127-267-264
UPC_join: 4177127267264
ACCOUNTNUMBER: R094808
LEGALSUMMARY: Quarter: NE S: 4 T: 22S R: 30E Quarter: NW S: 4 T: 22S R: 30E Quarter: SW S: 4 T: 22S R: 30E Quarter: SE S: 4 T: 22S R: 30E ALL MAP# 279-4 LOC E OF CARLSBAD EXEMPT
OWNERNAME: STATE OF NEW MEXICO
LANDACTUAL: 2922
OBJECTID_1: 63917
TAXYEAR_1: 2019
ACCOUNTNUMBER_1: R094808
SEQUENCE_R: 0
OWNER_OCCURENCE: 0
INTERNALID: C20160020105.1451631600000
DOCUMEN_TTYPE: Owner
ACTIVE_1: A
CONFIDENTIAL: 0
OWNERADDRESS_ADDRESS1: 310 OLD SANTA FE TRAIL
OWNERADDRESS_CITY: SANTA FE
OWNERADDRESS_STATE: NM
OWNERADDRESS_ZIP: 87504
OWNERID_1: C20160020105
OBJECTID_12: 52874
TAXYEAR_12: 2019
ACCOUNTNUMBER_12: R094808
SEQUENCE_R_1: 0
INTERNALID_1: R094808.LAND2769343.1511267104887
MODEL_TYPE: Land
ACCOUNTNUMBER_12_13: R094808
ACTUALAREA: 649.1
LANDCODE: 153_4_5
TAXAREA: CO_NR
VERSIONEND_1: 9223372036854775807
VERSIONSTART_1: 1511267104887

This map is a user generated static output from an Internet mapping site and is for reference only. Data layers that appear on this map may or may not be accurate, current, or otherwise reliable.

©2019 Sidwell. All rights reserved.



OBJECTID_12_13_14: 20897
UPC: 4-175-128-268-263
UPC_join: 4175128268263
ACCOUNTNUMBER: R094784
LEGALSUMMARY: Quarter: NE S: 7 T: 22S R: 30E Quarter: NW S: 7 T: 22S R: 30E Quarter: SW S: 7 T: 22S R: 30E Quarter: SE S: 7 T: 22S R: 30E ALL MAP# 279-7 LOC E OF CARLSBAD EXEMPT
OWNERNAME: BUREAU OF LAND MANAGEMENT
LANDACTUAL: 2928
OBJECTID_1: 63293
TAXYEAR_1: 2019
ACCOUNTNUMBER_1: R094784
SEQUENCE_R: 0
OWNER_OCCURENCE: 0
INTERNALID: C20160020093.1451631600000
DOCUMEN_TTYPE: Owner
ACTIVE_1: A
CONFIDENTIAL: 0
OWNERID_1: C20160020093
OBJECTID_12: 52850
TAXYEAR_12: 2019
ACCOUNTNUMBER_12: R094784
SEQUENCE_R_1: 0
INTERNALID_1: R094784.LAND2768727.1511267090814
MODEL_TYPE: Land
ACCOUNTNUMBER_12_13: R094784
ACTUALAREA: 650.7
LANDCODE: 141_4_5
TAXAREA: CO_NR
VERSIONEND_1: 9223372036854775807
VERSIONSTART_1: 1511267090814

This map is a user generated static output from an Internet mapping site and is for reference only. Data layers that appear on this map may or may not be accurate, current, or otherwise reliable.

©2019 Sidwell. All rights reserved.

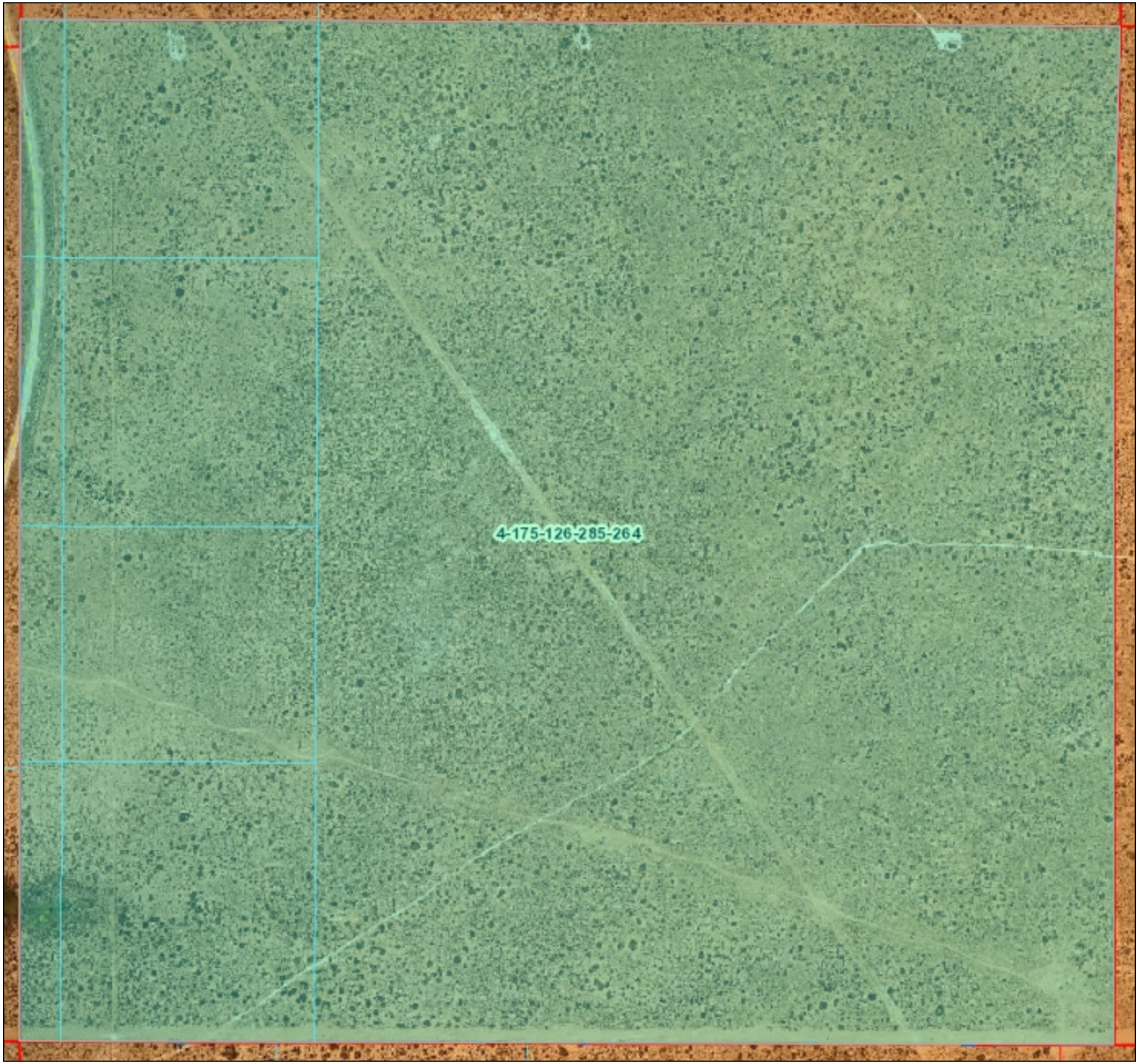

OBJECTID_12_13_14: 5561
UPC: 4-175-126-285-264
UPC_join: 4175126285264
ACCOUNTNUMBER: R094690
LEGALSUMMARY: Quarter: NE S: 31 T: 21S R: 30E Quarter: NW S: 31 T: 21S R: 30E Quarter: SW S: 31 T: 21S R: 30E Quarter: SE S: 31 T: 21S R: 30E ALL MAP# 207-31 LOC E OF CARLSBAD EXEMPT
OWNERNAME: BUREAU OF LAND MANAGEMENT
LANDACTUAL: 3114
OBJECTID_1: 63209
TAXYEAR_1: 2019
ACCOUNTNUMBER_1: R094690
SEQUENCE_R: 0
OWNER_OCCURENCE: 0
INTERNALID: C20160020093.1451631600000
DOCUMEN_TTYPE: Owner
ACTIVE_1: A
CONFIDENTIAL: 0
OWNERID_1: C20160020093
OBJECTID_12: 52764
TAXYEAR_12: 2019
ACCOUNTNUMBER_12: R094690
SEQUENCE_R_1: 0
INTERNALID_1: R094690.LAND2768913.1511267038984
MODEL_TYPE: Land
ACCOUNTNUMBER_12_13: R094690
ACTUALAREA: 692
LANDCODE: 141_4_5
TAXAREA: CO_NR
VERSIONEND_1: 9223372036854775807
VERSIONSTART_1: 1511267038984

This map is a user generated static output from an Internet mapping site and is for reference only. Data layers that appear on this map may or may not be accurate, current, or otherwise reliable.

©2019 Sidwell. All rights reserved.



OBJECTID_12_13_14: 32494
UPC: 4-176-127-267-264
UPC_join: 4176127267264
ACCOUNTNUMBER: R094809
LEGALSUMMARY: Quarter: NE S: 5 T: 22S R: 30E Quarter: NW S: 5 T: 22S R: 30E Quarter: SW S: 5 T: 22S R: 30E Quarter: SE S: 5 T: 22S R: 30E ALL MAP# 279-5 LOC E OF CARLSBAD EXEMPT
OWNERNAME: STATE OF NEW MEXICO
LANDACTUAL: 2922
OBJECTID_1: 63918
TAXYEAR_1: 2019
ACCOUNTNUMBER_1: R094809
SEQUENCE_R: 0
OWNER_OCCURENCE: 0
INTERNALID: C20160020105.1451631600000
DOCUMEN_TTYPE: Owner
ACTIVE_1: A
CONFIDENTIAL: 0
OWNERADDRESS_ADDRESS1: 310 OLD SANTA FE TRAIL
OWNERADDRESS_CITY: SANTA FE
OWNERADDRESS_STATE: NM
OWNERADDRESS_ZIP: 87504
OWNERID_1: C20160020105
OBJECTID_12: 52875
TAXYEAR_12: 2019
ACCOUNTNUMBER_12: R094809
SEQUENCE_R_1: 0
INTERNALID_1: R094809.LAND2769344.1511267105434
MODEL_TYPE: Land
ACCOUNTNUMBER_12_13: R094809
ACTUALAREA: 649.2
LANDCODE: 153_4_5
TAXAREA: CO_NR
VERSIONEND_1: 9223372036854775807
VERSIONSTART_1: 1511267105434

This map is a user generated static output from an Internet mapping site and is for reference only. Data layers that appear on this map may or may not be accurate, current, or otherwise reliable.

©2019 Sidwell. All rights reserved.



OBJECTID_12_13_14: 20964
UPC: 4-177-128-268-263
UPC_join: 4177128268263
ACCOUNTNUMBER: R094811
LEGALSUMMARY: Quarter: NE S: 9 T: 22S R: 30E Quarter: NW S: 9 T: 22S R: 30E Quarter: SW S: 9 T: 22S R: 30E Quarter: SE S: 9 T: 22S R: 30E N2, SW, W2SE MAP# 279-9 LOC E OF CARLSBAD EXEMPT
OWNERNAME: STATE OF NEW MEXICO
LANDACTUAL: 2559
OBJECTID_1: 63920
TAXYEAR_1: 2019
ACCOUNTNUMBER_1: R094811
SEQUENCE_R: 0
OWNER_OCCURENCE: 0
INTERNALID: C20160020105.1451631600000
DOCUMEN_TTYPE: Owner
ACTIVE_1: A
CONFIDENTIAL: 0
OWNERADDRESS_ADDRESS1: 310 OLD SANTA FE TRAIL
OWNERADDRESS_CITY: SANTA FE
OWNERADDRESS_STATE: NM
OWNERADDRESS_ZIP: 87504
OWNERID_1: C20160020105
OBJECTID_12: 52877
TAXYEAR_12: 2019
ACCOUNTNUMBER_12: R094811
SEQUENCE_R_1: 0
INTERNALID_1: R094811.LAND2769346.1511267106481
MODEL_TYPE: Land
ACCOUNTNUMBER_12_13: R094811
ACTUALAREA: 568.5
LANDCODE: 153_4_5
TAXAREA: CO_NR
VERSIONEND_1: 9223372036854775807
VERSIONSTART_1: 1511267106481

This map is a user generated static output from an Internet mapping site and is for reference only. Data layers that appear on this map may or may not be accurate, current, or otherwise reliable.

©2019 Sidwell. All rights reserved.



OBJECTID_12_13_14: 20933
UPC: 4-176-128-267-263
UPC_join: 4176128267263
ACCOUNTNUMBER: R094810
LEGALSUMMARY: Quarter: NE S: 8 T: 22S R: 30E Quarter: NW S: 8 T: 22S R: 30E Quarter: SW S: 8 T: 22S R: 30E Quarter: SE S: 8 T: 22S R: 30E ALL MAP# 279-8 LOC E OF CARLSBAD EXEMPT
OWNERNAME: STATE OF NEW MEXICO
LANDACTUAL: 2913
OBJECTID_1: 63919
TAXYEAR_1: 2019
ACCOUNTNUMBER_1: R094810
SEQUENCE_R: 0
OWNER_OCCURENCE: 0
INTERNALID: C20160020105.1451631600000
DOCUMEN_TTYPE: Owner
ACTIVE_1: A
CONFIDENTIAL: 0
OWNERADDRESS_ADDRESS1: 310 OLD SANTA FE TRAIL
OWNERADDRESS_CITY: SANTA FE
OWNERADDRESS_STATE: NM
OWNERADDRESS_ZIP: 87504
OWNERID_1: C20160020105
OBJECTID_12: 52876
TAXYEAR_12: 2019
ACCOUNTNUMBER_12: R094810
SEQUENCE_R_1: 0
INTERNALID_1: R094810.LAND2769345.1511267105950
MODEL_TYPE: Land
ACCOUNTNUMBER_12_13: R094810
ACTUALAREA: 647.6
LANDCODE: 153_4_5
TAXAREA: CO_NR
VERSIONEND_1: 9223372036854775807
VERSIONSTART_1: 1511267105950

This map is a user generated static output from an Internet mapping site and is for reference only. Data layers that appear on this map may or may not be accurate, current, or otherwise reliable.

©2019 Sidwell. All rights reserved.

Tab 10
Section 10 - Written Description of the Routine Operations of the Facility

Section 10

Written Description of the Routine Operations of the Facility

---

A written description of the routine operations of the facility. Include a description of how each piece of equipment will be operated, how controls will be used, and the fate of both the products and waste generated. For modifications and/or revisions, explain how the changes will affect the existing process. In a separate paragraph describe the major process bottlenecks that limit production. The purpose of this description is to provide sufficient information about plant operations for the permit writer to determine appropriate emission sources.

The Husky Central Delivery Point (CDP) is a gas processing facility with oil and NGL stabilization. The facility will produce sales gas, Y-Grade NGL, and spec oil products. The Husky CDP will be built over multiple phases to reach a full processing capacity of 1.5 BCFD of Natural Gas, 200,000 BPD of Oil Stabilization and 190,000 BPD of NGL Stabilization. The overall facility will be designed to accommodate three (3) cryogenic (cryo) trains. In addition to the gas processing and CDP equipment, XTO Energy is planning the construction of four (4) Cogen turbines to provide power and auxiliary heat to the facility.

Natural Gas System
The Husky CDP gas handling system will be fed by natural gas gathering lines, delivering sweet natural gas to the facility. At the inlet of the facility, these pipelines will be routed to the inlet slug catcher where condensate is separated and routed to the NGL stabilizers to produce Y-Grade NGL product. Gas from the slug catcher will feed each of the three (3) cryo trains. Each cryo train will have a dedicated amine unit (AU1-AU3) to remove CO2 and a molecular sieve dehydration unit to remove water. The gas will first be treated using MDEA and piperizine in the amine unit to remove carbon dioxide from the gas streams. In the amine regeneration unit for each train, flash gas from the amine flash tank and amine still will be routed to a thermal oxidizer (TO1-TO3) to destroy hazardous air pollutants (HAPs) and volatile organic compounds (VOCs). In the molecular sieve dehydration units, molecular sieve beds are used as to dehydrate the treated gas. The units are not point sources of emissions and therefore not included in Table 2A. In this two-unit design, one unit operates in dehydration mode while the other operates in regeneration mode. Switching from dehydration to regeneration is done by use of automatic switching valves. As the dehydrated unit becomes saturated with water vapor, it is automatically switched to regeneration mode while the regeneration unit becomes active in dehydration mode. When the beds require regeneration due to saturation, a fired regeneration gas heater (RHTR1-RHTR3) with a maximum heat input rate of 39.14 MMBtu/hr will be used to remove water from the mol sieve beds. Following dehydration, the dry gas is cooled and expanded in the cryo units before being boosted by electric drive residue compressor engines into the sales gas pipeline.

NGL System
Natural gas liquids (NGLs) are gathered from surrounding compressor stations and piped into the facility. These pipelines will be combined with the condensate dropout from the slug catcher. This combined liquid stream will be processed through a two-tower condensate stabilization system to produce a “Y-Grade” NGL and a 9 RVP stabilized spec oil. From the first stabilization tower, the overhead gas will be compressed using electric drive compressor engine and sent to the cryo trains, whereas the liquids will be sent to the second tower to produce Y-Grade NGL. The Y-Grade liquids from the second tower will be stored in pressurized bullets and pumped to the NGL sales pipeline. Any gas from the second tower is routed to the cryo trains. Note that the NGLs from the cryo trains will also be pumped to and exported via the same pipeline. The stabilized oil from the second tower will be pumped to the internal floating roof oil storage tanks (IFR1-IFR4), where it is combined with on-spec oil, then routed to the oil sales pipeline. Heat for the stabilization process is provided by twelve (12) heaters, each with a maximum heat input rate of 64.83 MMBtu/hr (SHTR1-SHTR12).

Oil System
Oil from surrounding batteries will be routed through the oil inlet surge vessel, which provides initial phase separation of oil and water. Any free water dropout will be routed through a 1,000 bbl gunbarrel separator (GBS1). From GBS1, skimmed oil will be sent to the 500 bbl slop oil tank (OTK7) and the heavier water will be sent to 750 bbl produced water tanks (PWTK1-PWTK2). All tanks are gas blanketed. Slop oil will be pumped back to oil stabilization or trucked offsite. Produced water will be transported offsite via pipeline; however, XTO included produced water loading in the permit application.

Under normal circumstances, the oil received at the CDP is sent directly from the inlet surge vessel to IFR1-IFR4 for temporary storage before transporting the oil offsite via pipeline. If the incoming oil RVP does not meet sales specifications, it is sent to the oil stabilization process. Following stabilization, on-spec oil product will be sent to IFR1-IFR4. For flexibility, the

inlet oil may be blended with the oil stabilization product to create desired product. Flash gas from oil stabilization will be recompressed to liquid and routed to the NGL stabilizers.

In addition to receiving oil at the Husky CDP via pipeline, stabilized oil may also be received from third party operators via truck unloading. Husky is designed to process up to 8,000 BOPD of third party oil via truck unloading. Husky will have truck unloading terminals where the stabilized oil will be routed to OTK1-OTK6. Normal emissions for truck unloading are captured in the combustor by the off gas produced in OTK1-OTK6.

Hot Oil System
Closed-loop natural gas-fired heater hot oil systems will be used to provide process heat to the NGL and oil stabilization packages, as well as the amine and the cryo units. The systems will be packaged units with fired heating, expansion vessel, pumps, and filtration. All NGL stabilizers will be served by a common hot oil loop operating with a 500°F supply temperature. All oil stabilizer will be served by a common hot oil loop operating with a 400°F supply temperature. Supply to each oil/NGL stabilizer hot oil loop will be from 64.83 MMBtu/hr burner packages (SHTR1-SHTR12) and circulation pump skids, which can be set to run at either temperature. Each oil or condensate stabilization package has a nominal maximum duty requirement of 25 MMBtu/hr. Each Amine/Cryo train will have its own dedicated hot oil loop operating with a 350°F supply temperature, served by a 103.96 MMBtu/hr burner package (CHTR1-CHTR3) and pump skid with expansion vessel. During operation of Cogen, auxiliary heat for the hot oil system will be provided by the HRSGs on the turbines, not by the heaters. The number and type of heaters operating will depend upon the number of turbines operating,

Flare System
All automated vents and process reliefs will be routed to either the low pressure or high pressure headers for the dual-tip flare system, which consists of three dual-tip flares (FL1-FL3). The flares are permitted to manage pilot, purge, and process vessel SSM gas. Any gas that must be removed from the system during an emergency would also be routed to FL1-FL3. Gas may be routed to one or all of the flares at any given time.

Combustor
A combustor (ECD1) is used collect and dispose of vapors emitted from OTK1-OTK7, GBS1, and PWTK1-PWTK2. The combustor will also control vapors emitted during the loading of slop oil.

Turbines
The Cogen turbines (TUR1-TUR4), equipped with heat recovery steam generators (HRSGs), will be used to provide power to the Husky CDP and other XTO facilities. The HRSGs will replace supplemental heat from the stabilizer and cryo heaters for the Husky facility while in operation.

Emergency Generators
The emergency generators for the CDP portion of the plant (GEN1-GEN5) will be used to power safety-sensitive equipment in the event of grid power outages. The generators for the Cogen portion of the plant (GEN6-GEN8) will be used to black start the turbines in the event of grid power outages.

Tab 11
Section 11 -Source Determination

Section 11
Source Determination
Source submitting under 20.2.70, 20.2.72, 20.2.73, and 20.2.74 NMAC

Sources applying for a construction permit, PSD permit, or operating permit shall evaluate surrounding and/or associated sources (including those sources directly connected to this source for business reasons) and complete this section. Responses to the following questions shall be consistent with the Air Quality Bureau's permitting guidance, Single Source Determination Guidance, which may be found on the Applications Page in the Permitting Section of the Air Quality Bureau website.

Typically, buildings, structures, installations, or facilities that have the same SIC code, that are under common ownership or control, and that are contiguous or adjacent constitute a single stationary source for 20.2.70, 20.2.72, 20.2.73, and 20.2.74 NMAC applicability purposes. Submission of your analysis of these factors in support of the responses below is optional, unless requested by NMED.

A. Identify the emission sources evaluated in this section (list and describe)**:**
See Table 2A

B. Apply the 3 criteria for determining a single source:

SIC Code: Surrounding or associated sources belong to the same 2-digit industrial grouping (2-digit SIC code) as this facility, OR surrounding or associated sources that belong to different 2-digit SIC codes are support facilities for this source.

☑ **Yes** ☐ **No**

Common Ownership or Control: Surrounding or associated sources are under common ownership or control as this source.

☑ **Yes** ☐ **No**

Contiguous or Adjacent: Surrounding or associated sources are contiguous or adjacent with this source.

☑ **Yes** ☐ **No**

C. Make a determination:

☑ The source, as described in this application, constitutes the entire source for 20.2.70, 20.2.72, 20.2.73, or 20.2.74 NMAC applicability purposes. If in "A" above you evaluated only the source that is the subject of this application, all "**YES**" boxes should be checked. If in "A" above you evaluated other sources as well, you must check **AT LEAST ONE** of the boxes "**NO**" to conclude that the source, as described in the application, is the entire source for 20.2.70, 20.2.72, 20.2.73, and 20.2.74 NMAC applicability purposes.

☐ The source, as described in this application, **does not** constitute the entire source for 20.2.70, 20.2.72, 20.2.73, or 20.2.74 NMAC applicability purposes (A permit may be issued for a portion of a source). The entire source consists of the following facilities or emissions sources (list and describe):

Tab 12
Section 12 - PSD Applicability Determination for All Sources

Section 12

Section 12.A
PSD Applicability Determination for All Sources

(Submitting under 20.2.72, 20.2.74 NMAC)

A PSD applicability determination for all sources. For sources applying for a significant permit revision, apply the applicable requirements of 20.2.74.AG and 20.2.74.200 NMAC and to determine whether this facility is a major or minor PSD source, and whether this modification is a major or a minor PSD modification. It may be helpful to refer to the procedures for Determining the Net Emissions Change at a Source as specified by Table A-5 (Page A.45) of the EPA New Source Review Workshop Manual to determine if the revision is subject to PSD review.

A. This facility is:

- ☐ **a minor PSD source before and after this modification (if so, delete C and D below).**
- ☐ **a major PSD source before this modification. This modification will make this a PSD minor source.**
- ☐ **an existing PSD Major Source that has never had a major modification requiring a BACT analysis.**
- ☐ **an existing PSD Major Source that has had a major modification requiring a BACT analysis**
- ☑ **a new PSD Major Source after this modification. (Note: This is a proposed new site, not a modification.)**

B. This facility is two of the listed 20.2.74.501 Table I – PSD Source Categories. The "project" emissions for this facilty are significant. Facility PTE is as follows [see Table 2 in 20.2.74.502 NMAC for a complete list of significance levels]:

a. **NOx: 259.9 TPY**
b. **CO: 234.7TPY**
c. **VOC: 489.2 TPY**
d. **SOx: 51.2 TPY**
e. **PM: 183.6TPY**
f. **PM10: 177.0 TPY**
g. **PM2.5: 175.0 TPY**
h. **Fluorides: 0.0 TPY**
i. **Lead: 0.0 TPY**
j. **Sulfur compounds (listed in Table 2): 0.0 TPY**
k. **GHG: 2,640,840 TPY**

C. Netting is not required since this is not a modification.

D. BACT is required. The BACT Analysis is provided in Section 12B.

E. If this is an existing PSD major source, or any facility with emissions greater than 250 TPY (or 100 TPY for 20.2.74.501 Table 1 – PSD Source Categories), determine whether any permit modifications are related, or could be considered a single project with this action, and provide an explanation for your determination whether a PSD modification is triggered. – Not applicable since this is a new source.

Section 12.B
Special Requirements for a PSD Application

(Submitting under 20.2.74 NMAC)

Prior *to Submitting a PSD application*, the permittee shall:

- ☑ Submit the BACT analysis for review prior to submittal of the application. No application will be ruled complete until the final determination regarding BACT is made, as this determination can ultimately affect information to be provided in the application. A pre-application meeting is recommended to discuss the requirements of the BACT analysis.
- ☑ Submit a modeling protocol prior to submitting the permit application. **[Except for GHG]**
- ☑ Submit the monitoring exemption analysis protocol prior to submitting the application. **[Except for GHG]**

For PSD applications, the permittee shall also include the following:

- ☑ Documentation containing an analysis on the impact on visibility. **[Except for GHG]**
- ☑ Documentation containing an analysis on the impact on soil. **[Except for GHG]**
- ☑ Documentation containing an analysis on the impact on vegetation, including state and federal threatened and endangered species. **[Except for GHG]**
- ☑ Documentation containing an analysis on the impact on water consumption and quality. **[Except for GHG]**
- ☑ Documentation that the federal land manager of a Class I area within 100 km of the site has been notified and provided a copy of the application, including the BACT and modeling results. The name of any Class I Federal area located within one hundred (100) kilometers of the facility.

The following items are included with Section 12B:

- BACT Analysis
- Additional Impacts Analysis
- FLM Notification

BACT Analysis

BEST AVAILABLE CONTROL TECHNOLOGY REVIEW

XTO Energy Inc. > Husky Central Delivery Point

Prepared By:

XTO Energy Inc.
22777 Springwoods Village Parkway
Spring, TX 77389
(832) 625-0106

Robert Liles – Regional Director
Latha Kambham – Managing Consultant
Michael Celente – Senior Consultant

TRINITY CONSULTANTS
9400 Holly Blvd NE
Building 3, Suite 300
Albuquerque, NM 87122
(505) 266-6611

October 2019

Project 193201.0154

Environmental solutions delivered uncommonly well

TABLE OF CONTENTS

1. BACT DEFINITION 1-1
- 1.1. Emission Limitation 1-1
- 1.2. Each Pollutant 1-2
- 1.3. BACT Applies to the Proposed Source 1-2
- 1.4. Case-By-Case Basis 1-2
- 1.5. Achievable 1-3
- 1.6. Production Process 1-4
- 1.7. Available 1-4
- 1.8. Floor 1-4

2. PROJECT DEFINITION 2-5

3. BACT ASSESSMENT METHODOLOGY 3-6
- 3.1. Step 1 – Identify All Available Control Technologies 3-6
- 3.2. Step 2 – Eliminate Technically Infeasible Options 3-7
- 3.3. Step 3 – Rank Remaining Control Technologies by Control Effectiveness 3-7
- 3.4. Step 4 – Evaluate Most Effective Controls and Document Results 3-8
- 3.5. Step 5 – Select BACT 3-8

4. BACT REQUIREMENT 4-9
- 4.1. Identification of Potential Control Technologies 4-11
- 4.2. Proposed Primary BACT Limits Summary 4-12
- 4.3. Overall Project Efficiency Considerations 4-14

5. BACT EVALUATION FOR NATURAL GAS-FIRED COMBINED CYCLE TURBINES 5-16
- 5.1. NO_X BACT 5-16
  - *5.1.1. Background on Pollutant Formation 5-16*
  - *5.1.2. Identify All Available Control Technologies 5-16*
  - *5.1.3. Selection of BACT for NO_X 5-17*
- 5.2. CO BACT 5-19
  - *5.2.1. Background on Pollutant Formation 5-19*
  - *5.2.2. Identify All Available Control Technologies 5-19*
  - *5.2.3. Selection of BACT for CO 5-19*
- 5.3. VOC BACT 5-21
  - *5.3.1. Background on Pollutant Formation 5-21*
  - *5.3.2. Identify All Available Control Technologies 5-21*
  - *5.3.3. Selection of BACT for VOC 5-21*
- 5.4. $PM_{10}/PM_{2.5}$ BACT 5-23
  - *5.4.1. Background on Pollutant Formation 5-23*
  - *5.4.2. Identify All Available Control Technologies 5-23*
  - *5.4.3. Selection of BACT for $PM_{10}/PM_{2.5}$ 5-23*
- 5.5. H_2SO_4 BACT 5-25
  - *5.5.1. Background on Pollutant Formation 5-25*
  - *5.5.2. Identify All Available Control Technologies 5-25*
  - *5.5.3. Selection of BACT for H_2SO_4 5-25*
- 5.6. GHG BACT 5-27
  - *5.6.1. Background on Pollutant Formation 5-27*

5.6.2. Step 1 - Identification of Potential Control Technologies *5-27*
5.6.2.1. Carbon Capture and Sequestration (CCS) 5-27
5.6.2.2. Efficient Turbine Design 5-27
5.6.2.3. Fuel Selection 5-27
5.6.2.4. Good Combustion Practices 5-28
5.6.3. Step 2 - Elimination of Technically Infeasible Control Options *5-28*
5.6.3.1. Carbon Capture and Sequestration (CCS) 5-28
5.6.3.2. Efficient Turbine Design 5-32
5.6.3.3. Fuel Selection 5-32
5.6.4. Step 3 - Ranking of Remaining Control Technologies *5-32*
5.6.5. Step 4 - Evaluation of Most Stringent Controls *5-32*
5.6.6. Selection of BACT (Step 5) *5-32*
5.7. TURBINE BACT SUMMARY **5-33**

6. BACT EVALUATION FOR EMERGENCY ENGINES **6-34**
6.1. NO_X BACT **6-34**
6.1.1. Background on Pollutant Formation *6-34*
6.1.2. Identify All Available Control Technologies *6-34*
6.1.3. Selection of BACT for NO_X *6-34*
6.2. CO BACT **6-36**
6.2.1. Background on Pollutant Formation *6-36*
6.2.2. Identify All Available Control Technologies *6-36*
6.2.3. Selection of BACT for CO *6-36*
6.3. VOC BACT **6-38**
6.3.1. Background on Pollutant Formation *6-38*
6.3.2. Identify All Available Control Technologies *6-38*
6.3.3. Selection of BACT for VOC *6-38*
6.4. $PM_{10}/PM_{2.5}$ BACT **6-40**
6.4.1. Background on Pollutant Formation *6-40*
6.4.2. Identify All Available Control Technologies *6-40*
6.4.3. Selection of BACT for $PM_{10}/PM_{2.5}$ *6-40*
6.5. GHG BACT **6-42**
6.5.1. Background on Pollutant formation *6-42*
6.5.2. Step 1 - Identify All Available Control Technologies *6-42*
6.5.2.1. Carbon Capture and Sequestration 6-42
6.5.2.2. Efficient Engine Design 6-42
6.5.2.3. Low Carbon Fuel Selection 6-42
6.5.2.4. Good Combustion, Operating, and Maintenance Practices 6-42
6.5.3. Step 2 - Eliminate Technically Infeasible Options *6-42*
6.5.4. Step 3 - Rank Remaining Control Technologies by Control Effectiveness *6-42*
6.5.5. Step 4 - Evaluate Most Effective Control Options *6-43*
6.5.6. Step 5 - Select BACT for the Emergency Engines *6-43*

7. BACT EVALUATION FOR HEATERS **7-44**
7.1. NO_x BACT **7-44**
7.1.1. Background on Pollutant Formation *7-44*
7.1.2. Identify All Available Control Technologies *7-44*
7.1.3. Selection of BACT for NO_x *7-44*
7.2. CO BACT **7-46**
7.2.1. Background on Pollutant Formation *7-46*

7.2.2. Identify All Available Control Technologies *7-46*
7.2.3. Selection of BACT for CO *7-46*
7.3. VOC BACT **7-48**
7.3.1. Background on Pollutant Formation *7-48*
7.3.2. Identify All Available Control Technologies *7-48*
7.3.3. Selection of BACT for VOC *7-48*
7.4. $PM_{10}/PM_{2.5}$ BACT **7-50**
7.4.1. Background on Pollutant Formation *7-50*
7.4.2. Identify All Available Control Technologies *7-50*
7.4.3. Selection of BACT for $PM_{10}/PM_{2.5}$ *7-50*
7.5. GHG BACT **7-52**
7.5.1. Background on Pollution Formation *7-52*
7.5.2. Step 1 - Identification of Potential Control Technologies *7-52*
7.5.2.1. Carbon Capture and Sequestration 7-52
7.5.2.2. Efficient Heater Design 7-53
7.5.2.3. Heat Integration 7-53
7.5.2.4. Low Carbon Fuel Selection 7-53
7.5.2.5. Good Combustion Practices 7-53
7.5.3. Step 2 - Elimination of Technically Infeasible Control Technologies *7-53*
7.5.4. Step 3 - Ranking of Remaining Control Technologies *7-53*
7.5.5. Step 4 - Evaluation of Most Stringent Controls *7-53*
7.5.6. Step 5- Selection of BACT *7-54*
7.6. Heaters BACT summary **7-54**

8. BACT EVALUATION FOR FLARES **8-55**
8.1. BACT for VOC, CO, NO_x, $PM_{10}/PM_{2.5}$ and SO_2 ..... **8-55**
8.1.1. Background on Pollutant formation *8-55*
8.1.2. Identify all Available Control Technologies *8-55*
8.1.3. Selection of BACT for VOC, CO, NO_X, $PM_{2.5}/PM_{10}$ *8-55*
8.2. BACT for GHG **8-57**
8.2.1. Background on Pollutant formation *8-57*
8.2.2. Step 1 - Identify All Available Control Technologies *8-57*
8.2.2.1. Carbon Capture and Sequestration 8-57
8.2.2.2. Fuel Selection 8-57
8.2.2.3. Flare Gas Recovery 8-57
8.2.2.4. Good Combustion, Operating, and Maintenance Practices 8-57
8.2.2.5. Good Flare Design 8-57
8.2.2.6. Limited Vent Gas Releases to Flare 8-57
8.2.3. Step 2 - Eliminate Technically Infeasible Options *8-58*
8.2.3.1. Carbon Capture and Sequestration 8-58
8.2.3.2. Flare Gas Recovery 8-58
8.2.4. Step 3 - Rank Remaining Control Technologies by Control Effectiveness *8-58*
8.2.5. Step 4 - Evaluate Most Effective Control Options *8-58*
8.2.6. Step 5 - Select BACT for the Flare *8-58*

9. BACT EVALUATION FOR VAPOR COMBUSTION DEVICE **9-59**
9.1. NO_x BACT **9-59**
9.1.1. Background on Pollutant Formation *9-59*
9.1.2. Identify all Available Control Technologies *9-59*
9.1.3. Selection of BACT for NO_x *9-59*

9.2. CO BACT 9-59
9.2.1. Background on Pollutant Formation 9-59
9.2.2. Identify all Available Control Technologies 9-59
9.2.3. Selection of BACT for CO 9-59
9.3. VOC BACT 9-60
9.3.1. Background on Pollutant Formation 9-60
9.3.2. Identify all Available Control Technologies 9-60
9.3.3. Selection of BACT for VOC 9-60
9.4. $PM_{10}/PM_{2.5}$ BACT 9-60
9.4.1. Background on Pollutant Formation 9-60
9.4.2. Identify all Available Control Technologies 9-60
9.4.3. Selection of BACT for $PM_{10}/PM_{2.5}$ 9-60
9.5. GHG BACT 9-62
9.5.1. Background on Pollutant Formation 9-62
9.5.1.1. Carbon Capture and Sequestration 9-62
9.5.1.2. Proper Design 9-62
9.5.1.3. Low Carbon Fuel Selection 9-62
9.5.1.4. Good Combustion, Operating, and Maintenance Practices 9-62
9.5.2. Step 2 - Elimination of Technically Infeasible Control Technologies 9-62
9.5.3. Step 3 - Ranking of Remaining Control Technologies 9-62
9.5.4. Step 4 - Evaluation of Most Stringent Controls 9-63
9.5.5. Step 5 - Selection of BACT 9-63
9.6. VCD BACT Summary 9-63

10. BACT EVALUATION FOR THERMAL OXIDIZERS 10-64
10.1. NO_x BACT 10-64
10.1.1. Background on Pollutant Formation 10-64
10.1.2. Identify All Available Control Technologies 10-64
10.1.3. Selection of BACT for NO_x 10-64
10.2. CO BACT 10-66
10.2.1. Background on Pollutant Formation 10-66
10.2.2. Identify All Available Control Technologies 10-66
10.2.3. Selection of BACT for CO 10-66
10.3. VOC BACT 10-68
10.3.1. Background on Pollutant Formation 10-68
10.3.2. Identify All Available Control Technologies 10-68
10.3.3. Selection of BACT for VOC 10-68
10.4. BACT for GHG 10-70
10.4.1. Background on Pollutant formation 10-70
10.4.2. Step 1 - Identify All Available Control Technologies 10-70
10.4.2.1. Carbon Capture and Sequestration 10-70
10.4.2.2. Proper Design 10-70
10.4.2.3. Low Carbon Fuel Selection 10-70
10.4.2.4. Good Combustion, Operating, and Maintenance Practices 10-70
10.4.3. Step 2 - Eliminate Technically Infeasible Options 10-70
10.4.4. Step 3 - Rank Remaining Control Technologies by Control Effectiveness 10-70
10.4.5. Step 4 - Evaluate Most Effective Control Options 10-71
10.4.6. Step 5 - Select BACT for the Thermal Oxidizers 10-71

11. BACT EVALUATION FOR PRODUCED WATER STORAGE TANKS 11-72

11.1. VOC BACT 11-72
11.1.1. Background on Pollutant Formation 11-72
11.1.2. Identify all Available Control Technologies 11-72
11.1.3. Selection of BACT for VOC 11-72

12. BACT EVALUATION FOR SLOP STORAGE TANK 12-74
12.1. VOC BACT 12-74
12.1.1. Background on Pollutant Formation 12-74
12.1.2. Identify all Available Control Technologies 12-74
12.1.3. Selection of BACT for VOC 12-74

13. BACT EVALUATION FOR CONDENSATE STORAGE TANKS 13-76
13.1. VOC BACT 13-76
13.1.1. Background on Pollutant Formation 13-76
13.1.2. Identify all Available Control Technologies 13-76
13.1.3. Selection of BACT for VOC 13-76

14. BACT EVALUATION FOR GUNBARREL SEPARATOR 14-78
14.1. VOC BACT 14-78
14.1.1. Background on Pollutant Formation 14-78
14.1.2. Identify all Available Control Technologies 14-78
14.1.3. Selection of BACT for VOC 14-78

15. BACT EVALUATION FOR INTERNAL FLOATING ROOF (IFR) TANKS 15-80
15.1. VOC BACT 15-80
15.1.1. Background on Pollutant Formation 15-80
15.1.2. Identify all Available Control Technologies 15-80
15.1.3. Selection of BACT for VOC 15-80

16. BACT EVALUATION FOR FIXED ROOF TANK CLEANINGS 16-82
16.1. VOC BACT 16-82
16.1.1. Background on Pollutant Formation 16-82
16.1.2. Identify all Available Control Technologies 16-82
16.1.3. Selection of BACT for VOC 16-82

17. BACT EVALUATION FOR IFR TANK CLEANINGS AND LANDINGS 17-84
17.1. VOC BACT 17-84
17.1.1. Background on Pollutant Formation 17-84
17.1.2. Identify all Available Control Technologies 17-84
17.1.3. Selection of BACT for VOC 17-84

18. BACT EVALUATION FOR TRUCK UNLOADING OF CONDENSATE 18-86
18.1. VOC BACT 18-86
18.1.1. Background on Pollutant Formation 18-86
18.1.2. Identify all Available Control Technologies 18-86
18.1.3. Selection of BACT for VOC 18-86

19. BACT EVALUATION FOR PRODUCED WATER AND SLOP LOADING 19-88
19.1. VOC BACT 19-88
19.1.1. Background on Pollutant Formation 19-88
19.1.2. Identify all Available Control Technologies 19-88

19.1.3. Selection of BACT for VOC *19-88*

20. BACT EVALUATION FOR FUGITIVE EMISSIONS **20-90**

20.1. BACT for VOC and GHG **20-90**

20.1.1. Step 1 - Identify All Available Control Technologies *20-90*

20.1.1.1. Leakless Technology Components 20-90

20.1.1.2. LDAR Programs 20-90

20.1.1.3. Alternative Monitoring Program 20-90

20.1.1.4. AVO Monitoring Program 20-90

20.1.1.5. High Quality Components 20-91

20.1.2. Step 2 - Eliminate Technically Infeasible Options *20-91*

20.1.3. Step 3 - Rank Remaining Control Technologies by Control Effectiveness *20-91*

20.1.3.1. LDAR Programs 20-91

20.1.3.2. Alternative Monitoring Program 20-91

20.1.3.3. AVO Monitoring Program 20-91

20.1.3.4. High Quality Components 20-91

20.1.4. Step 4 - Evaluate Most Effective Control Options *20-92*

20.1.5. Step 5 - Select BACT for Fugitive Emissions *20-92*

21. BACT EVALUATION FOR AMINE UNIT STILL VENTS **21-94**

21.1. VOC BACT **21-94**

21.1.1. Background on Pollutant Formation *21-94*

21.1.2. Step 1- Identify all Available Control Technologies *21-94*

21.1.2.1. Best Practices 21-94

21.1.2.2. Operation and maintenance of the equipment in accordance with good air pollution control practices results in less VOC emissions. Thermal Incineration 21-94

21.1.3. Step 2 - Eliminate Technically Infeasible Options *21-94*

21.1.4. Step 3 - Rank the technically feasible control technologies by control effectiveness *21-94*

21.1.5. Step 4 - Evaluate most effective controls *21-94*

21.1.6. Step 5 - Select BACT *21-94*

21.2. GHG BACT **21-95**

21.2.1. Background on Pollutant Formation *21-95*

21.2.2. Step 1 - Identify all Available Control Technologies *21-95*

21.2.2.1. Carbon Capture and Sequestration 21-95

21.2.2.2. Flare 21-96

21.2.2.3. Thermal Oxidizer 21-97

21.2.2.4. Condenser 21-97

21.2.2.5. Proper Design and Operations 21-97

21.2.2.6. Use of Tank Flash Gas Recovery Systems 21-97

21.2.3. Step 2 - Eliminate Technically Infeasible Options *21-97*

21.2.4. Step 3 - Rank the technically feasible control technologies by control effectiveness *21-97*

21.2.5. Step 4 - Evaluate most effective controls *21-98*

21.2.5.1. Carbon Capture and Sequestration 21-98

21.2.6. Step 5 - Select BACT *21-101*

22. BACT EVALUATION FOR HAUL ROADS **22-102**

22.1.1. Background on Pollutant Formation *22-102*

22.1.2. Step 1 - Identify all Available Control Technologies *22-102*

22.1.3. Step 2 - Eliminate Technically Infeasible Options *22-102*

22.1.4. Step 3 - Rank Remaining Control Technologies by Control Effectiveness *22-102*

22.1.5. Step 4 - Evaluate Most Effective Control Options *22-102*
22.1.6. Step 5 - Select BACT for Haul Roads *22-103*

23. BACT EVALUATION FOR SSM ACTIVITIES **23-105**
23.1. VOC BACT **23-105**
23.1.1. Background on Pollutant Formation *23-105*
23.1.2. Identify all Available Control Technologies *23-105*
23.1.3. Selection of BACT for VOC *23-105*

APPENDIX A. RBLC TABLES **23-107**

LIST OF TABLES

Table 4-1. Pollutants Evaluated in the BACT Analysis for Each Emission Unit 4-9

Table 4-2. Proposed Primary BACT Limits Summary 4-12

Table 4-3. Summary of Proposed Good Combustion Practices 4-15

Table 5-1. BACT Analysis for Natural Gas-Fired Combined Cycle Turbines - NO_X 5-18

Table 5-2. BACT Analysis for Natural Gas-Fired Combined Cycle Turbines - CO 5-20

Table 5-3. BACT Analysis for Natural Gas-Fired Combined Cycle Turbines - VOC 5-22

Table 5-4. BACT Analysis for Natural Gas-Fired Combined Cycle Turbines – $PM_{10}/PM_{2.5}$ 5-24

Table 5-5. BACT Analysis for Natural Gas-Fired Combined Cycle Turbines – H_2SO_4 5-26

Table 5-6. Recent (2010 and Later) CCS Projects in the United States 5-31

Table 5-7 Turbine BACT Summary 5-33

Table 6-1. BACT Analysis for Natural Gas-Fired Reciprocating Internal Combustion Engines - NO_X 6-35

Table 6-2. BACT Analysis for Natural Gas-Fired Reciprocating Internal Combustion Engines - CO 6-37

Table 6-3. BACT Analysis for Natural Gas-Fired Reciprocating Internal Combustion Engines - VOC 6-39

Table 6-4. BACT Analysis for Natural Gas-Fired Reciprocating Internal Combustion Engines – $PM_{10}/PM_{2.5}$ 6-41

Table 7-1. BACT Analysis for Natural Gas-Fired Heaters – NO_X 7-45

Table 7-2. BACT Analysis for Natural Gas-Fired Heaters – CO 7-47

Table 7-3. BACT Analysis for Natural Gas-Fired Heaters – VOC 7-49

Table 7-4. BACT Analysis for Natural Gas-Fired Heaters – $PM_{10}/PM_{2.5}$ 7-51

Table 7-5 <100 MMBTU/hr Heaters BACT Summary 7-54

Table 8-1. BACT Analysis for Fuel Combustion Emissions from Flares – NO_X, CO, VOC and $PM_{10}/PM_{2.5}$ 8-56

Table 9-1. BACT Analysis for Vapor Combustion Device – NO_X, CO, VOC, and $PM_{10}/PM_{2.5}$ 9-61

Table 9-2 VCD BACT Summary 9-63

Table 10-1. BACT Analysis for Thermal Oxidizers – NO_X 10-65

Table 10-2. BACT Analysis for Thermal Oxidizers – CO 10-67

Table 10-3. BACT Analysis for Thermal Oxidizers – VOC 10-69

Table 11-1. BACT Analysis for Produced Water Storage Tanks – VOC 11-73

Table 12-1. BACT Analysis for Slop Storage Tank – VOC 12-75

Table 13-1. BACT Analysis for Condensate Storage Tanks – VOC 13-77

Table 14-1. BACT Analysis for Gunbarrel Separator – VOC 14-79

Table 15-1. BACT Analysis for IFR Tanks – VOC 15-81

Table 16-1. BACT Analysis for Fixed Roof Tank Cleanings – VOC 16-83

Table 17-1. BACT Analysis for IFR Tank Cleanings and Landings – VOC 17-85

Table 18-1. BACT Analysis for Truck Unloading of Condensate – VOC 18-87

Table 19-1. BACT Analysis for Produced Water and Slop Truck Loading – VOC 19-89

Table 20-1. BACT Analysis for Fugitive Emissions – VOC and GHG 20-93

Table 21-1. GHG Reduction Efficiencies and Ranking 21-98

Table 22-1. BACT Analysis for Haul Road Emissions – $PM_{10}/PM_{2.5}$ 22-104

Table 23-1. BACT Analysis for SSM Activities – VOC 23-106

1. BACT DEFINITION

This report discusses the regulatory basis and approach used in completing the Best Available Control Technology (BACT) analysis for pollutants triggering this requirement for the XTO Energy Inc. (XTO) Husky Central Delivery Point (Husky). In addition, this report also documents the emission units for which the BACT analyses were performed.

The requirement to conduct a BACT analysis is set forth in the PSD regulations in 40 CFR §52.21(j)(2):

(j) Control Technology Review.

(2) A new major stationary source shall apply best available control technology for each regulated NSR pollutant that it would have the potential to emit in significant amounts.

BACT is defined in the PSD regulations 40 CFR §52.21(b)(12)(emphasis added) in relevant part as:

…an emissions limitation (including a visible emission standard) based on the maximum degree of reduction for each pollutant subject to regulation under Act which would be emitted from any proposed major stationary source or major modification which the Administrator, on a case-by-case basis taking into account energy, environmental, and economic impacts and other costs, determines is achievable for such a source or modification through application of production processes or available methods, systems, and techniques, including fuel cleaning or treatment or innovative fuel combustion techniques for control of such pollutant. In no event shall application of best available control technology result in emissions of any pollutant which would exceed the emissions allowed by any applicable standard under 40 CFR parts 60 and 61.

Although this definition was not changed by the Tailoring Rule, differences in the characteristics of criteria pollutant and GHG emissions from large industrial sources present several GHG-specific considerations under the BACT definition, which warrants further discussion. Those underlined terms in the BACT definition are addressed further below.

1.1. EMISSION LIMITATION

BACT is "an emission limitation," not an emission reduction rate or a specific technology. While BACT is prefaced upon the application of technologies reflecting the maximum reduction rate achievable, the final result of BACT is an emission limit. Typically, when quantifiable and measurable,[1] this limit would be expressed as an emission rate limit of a pollutant (e.g., lb/MMBtu, ppm, or lb/hr).[2] Furthermore, EPA's guidance on GHG BACT has indicated that GHG BACT limitations should be averaged over long-term timeframes such as 30- or 365-day rolling average.[3]

[1] The definition of BACT allows use of a work practice where emissions are not easily measured or enforceable. 40 CFR §52.21(b)(12).

[2] Emission limits can be broadly differentiated as "rate-based" or "mass-based." For a turbine, a rate-based limit would typically be in units of lb/MMBtu (mass emissions per heat input). In contrast, a typical mass-based limit would be in units of lb/hr (mass emissions per time).

[3] *PSD and Title V Permitting Guidance for Greenhouse Gases*. March 2011, page 46.

1.2. EACH POLLUTANT

Since BACT applies to "each pollutant subject to regulation under the Act," the BACT evaluation process is typically conducted for each regulated NSR pollutant individually and not for a combination of pollutants.[4] For PSD applicability assessments involving GHGs, the regulated NSR pollutant subject to regulation under the Clean Air Act (CAA) is the sum of six greenhouse gases and not a single pollutant.[5] In the final Tailoring Rule preamble, EPA went beyond applying this combined pollutant approach for GHGs to PSD applicability and made the following recommendations that suggest applicants should conduct a single GHG BACT evaluation on a CO_2e basis for emission sources that emit more than one GHG:

> *However, we disagree with the commenter's ultimate conclusion that BACT will be required for each constituent gas rather than for the regulated pollutant, which is defined as the combination of the six well-mixed GHGs. To the contrary, we believe that, in combination with the sum-of-six gases approach described above, the use of the CO_2e metric will enable the implementation of flexible approaches to design and implement mitigation and control strategies that look across all six of the constituent gases comprising the air pollutant (e.g., flexibility to account for the benefits of certain CH_4 control options, even though those options may increase CO_2). Moreover, we believe that the CO_2e metric is the best way to achieve this goal because it allows for tradeoffs among the constituent gases to be evaluated using a common currency.*[6]

For the proposed project, the GHG emissions are driven primarily by CO_2. CO_2 emissions represent more than 99% of the total CO_2e for the project as a whole. As such, the top-down GHG BACT analysis in the relevant sections should and will focus on CO_2.

1.3. BACT APPLIES TO THE PROPOSED SOURCE

BACT applies to the type of source proposed by the applicant. BACT does not redefine the source. The applicant defines the source (i.e., its goals, aims, and objectives). Although BACT is based on the type of source as proposed by the applicant, the scope of the applicant's ability to define the source is not absolute. A key task for the reviewing agency is to determine which parts of the proposed process are inherent to the applicant's purpose and which parts may be changed without changing that purpose. The proposed project is discussed in Form UA3, Section 3 and a process description has been included in Form UA3, Section 10 of this application to guide the technical reviewers in the areas of need and scope of this project and how BACT should be reviewed in light of this detailed information.

1.4. CASE-BY-CASE BASIS

Unlike many of the CAA programs, the PSD program's BACT evaluation is case-by-case. BACT permit limits are not simply the requirement for a control technology because of its application elsewhere or the direct transference of the lowest emission rate found in other permits for similar sources, applied to the proposed source. EPA has explained how the top-down BACT analysis process works on a case-by-case basis. To assist applicants and regulators with the case-by-case process, in 1990 EPA issued a Draft Manual on New Source Review permitting which included a "top-down" BACT analysis.

> *In brief, the top-down process provides that all available control technologies be ranked in descending order of control effectiveness. The PSD applicant first examines the most stringent--or "top"--alternative.*

---

[4] 40 CFR §52.21(b)(12)

[5] 40 CFR § 52.21(b)(49)(i)

[6] 75 FR 31,531, Prevention of Significant Deterioration and Title V Greenhouse Gas Tailoring Rule; Final Rule, June 3, 2010.

That alternative is established as BACT unless the applicant demonstrates, and the permitting authority in its informed judgment agrees, that technical considerations, or energy, environmental, or economic impacts justify a conclusion that the most stringent technology is not "achievable" in that case. If the most stringent technology is eliminated in this fashion, then the next most stringent alternative is considered, and so on.[7]

The five steps in a top-down BACT evaluation can be summarized as follows:

- Step 1. Identify all available control technologies;
- Step 2. Eliminate technically infeasible options;
- Step 3. Rank the technically feasible control technologies by control effectiveness;
- Step 4. Evaluate most effective controls; and
- Step 5. Select BACT.

Additionally, it is important to note that the top-down process is conducted on a unit-by-unit, pollutant-by-pollutant basis and only considers the portions of the facility that are considered "emission units" as defined under the PSD regulations.[8]

1.5. ACHIEVABLE

BACT is to be set at the lowest value that is "achievable." However, there is an important distinction between emission rates achieved at a specific time on a specific unit, and an emission limitation that a unit must be able to meet continuously over its operating life. As discussed by the DC Circuit Court of Appeals:

In National Lime Ass'n v. EPA, 627 F.2d 416, 431 n.46 (D.C. Cir. 1980), we said that where a statute requires that a standard be "achievable," it must be achievable" under most adverse circumstances which can reasonably be expected to recur."[9]

EPA has reached similar conclusions in prior determinations for PSD permits.

Agency guidance and our prior decisions recognize a distinction between, on the one hand, measured 'emissions rates,' which are necessarily data obtained from a particular facility at a specific time, and on the other hand, the 'emissions limitation' determined to be BACT and set forth in the permit, which the facility is required to continuously meet throughout the facility's life. Stated simply, if there is uncontrollable fluctuation or variability in the measured emission rate, then the lowest measured emission rate will necessarily be more stringent than the "emissions limitation" that is "achievable" for that pollution control method over the life of the facility. Accordingly, because the "emissions limitation" is applicable for the facility's life, it is wholly appropriate for the permit issuer to consider, as part of the BACT analysis, the

---

[7] Draft NSR Manual at B-2. "The NSR Manual has been used as a guidance document in conjunction with new source review workshops and training, and as a simple guide for state and federal permitting officials with respect to PSD requirements and policy. Although it is not binding Agency regulation, the NSR Manual has been looked to be this Board as a statement of the Agency's thinking on certain PSD issues. E.g., *In re RockGen Energy Ctr.*, 8 E.A.D. 536, 542 n. 10 (EAB 1999), *In re Knauf Fiber Glass, GmbH*, 8 E.A.D. 121, 129 n. 13 (EAB 1999)." *In re Prairie State Generating Company* 13 E.A.D. 1, 13 n 2 (2006)

[8] Pursuant to 40 CFR §52.21(a)(7), emission unit means any part of a stationary source that emits or would have the potential to emit any regulated NSR pollutant.

[9] As quoted in Sierra Club v. U.S. EPA (97-1686).

extent to which the available data demonstrate whether the emissions rate at issue has been achieved by other facilities over a long term.[10]

Thus, BACT must be set at the lowest feasible emission rate recognizing that the facility must be in compliance with that limit for the lifetime of the facility on a continuous basis. While viewing individual unit performance can be instructive in evaluating what BACT might be, any actual performance data must be viewed carefully, as rarely will the data be adequate to truly assess the performance that a unit will achieve during its entire operating life.

To assist in meeting the BACT limit, the source must consider production processes or available methods, systems or techniques, as long as those considerations do not redefine the source.

1.6. PRODUCTION PROCESS

The definition of BACT lists both production processes and control technologies as possible means for reducing emissions.

1.7. AVAILABLE

The term "available" in the definition of BACT is implemented through a feasibility analysis – a determination that the technology being evaluated is demonstrated or available and applicable.

1.8. FLOOR

For criteria pollutants, the least stringent emission rate allowable for BACT is any applicable limit under either New Source Performance Standards (NSPS – Part 60) or National Emission Standards for Hazardous Air Pollutants (NESHAP – Parts 61). Since no GHG limits have been incorporated into any existing NSPS or Part 61 NESHAPs, no floor for a GHG BACT analysis is available for consideration.

[10] U.S. EPA Environmental Appeals Board decision, *In re: Newmont Nevada Energy Investment L.L.C.* PSD Appeal No. 05-04, decided December 21, 2005. Environmental Administrative Decisions, Volume 12, Page 442.

XTO is proposing to construct a natural gas processing and central delivery point located approximately 13.9 miles northeast of Loving, NM in Eddy County. The Husky Central Delivery Point (CDP) is a gas processing facility with oil and NGL stabilization and will produce sales gas, Y-grade NGL, and spec oil products. The Husky CDP will be built over multiple phases to reach a full processing capacity of 1.5 BCFD of natural gas, 200,000 BPD of oil stabilization and 190,000 BPD of NGL stabilization. The overall facility will be designed to accommodate three (3) cryogenic (cryo) trains. Additionally, XTO Energy is planning the construction of four (4) cogeneration turbines to provide power and auxiliary heat to the CDP. As discusses in Section 3 of the UA3, there are three (3) proposed operating scenarios: (1) Operation of the facility without cogeneration turbines and full heater buildout; (2) Operation of the facility with cogeneration turbines with reduced heater buildout; and (3) Combination of turbine and heater use during turbine downtime. For the purposes of this BACT Review, equipment from any of these three scenarios is included as detailed below:

- Twelve (12) Stabilization Hot Oil Heaters rated at 64.83 MMBtu/hr (Units SHTR1 through SHTR12);
- Three (3) Cryo Hot Oil Heaters rated at 103.99 MMBtu/hr (Units CHTR1 through CHTR3);
- Three (3) Regen Heaters rated at 39.14 MMBtu/hr (Units RHTR1 through RHTR3);
- Three (3) Dual-Tip Flares (Units FL1 through FL3);
- Four (4) 100,000 bbl Internal Floating Roof Tanks (Units IFR1 through IFR4);
- Six (6) 2,000 bbl Fixed Roof Oil Storage Tanks (Units OTK1 through OTK6);
- One (1) Vapor Combustor (Unit ECD1);
- Three (3) Thermal Oxidizers (Units TO1 through TO3);
- Facility Fugitives (Unit FUG);
- Storage Tank SSM Emissions (Unit SSM);
- Haul Road Fugitives (Unit ROAD);
- Two (2) 750 bbl Produced Water Tanks (Units PWTK1 through PWTK2);
- Produced Water Loading (Unit PWTL);
- Slop Oil Loading (Unit OTL);
- Three (3) Amine Units rated at 250 MMSCFD (Units AU1 through AU3);
- One (1) 1,000 bbl Gunbarrel Tank (Unit GBS1);
- One (1) 500 bbl Slop Oil Tank (Unit OTK7);
- Four (4) Natural Gas-Fired Turbines for Cogeneration (Units TUR1 through TUR4); and
- Eight (8) Natural Gas-Fired Emergency Generators rated at 2485 kW (Units GEN1 through GEN8).

BACT for the proposed project has been evaluated via a "top-down" approach which includes the steps outlined in the following subsections.

Additionally, EPA's March 2011 GHG Permitting Guidance generally directed that a BACT review for GHGs should be done in the same manner as it is done for any other regulated pollutant.[11] It should be noted that the scope of a BACT review was clarified in two ways with respect to GHGs:

- EPA stressed that applicants should clearly define the scope of the project being reviewed.[12] XTO has provided this information in Section 1 and Section 9 (Attachment G) of this application.
- EPA clarified that the scope of the BACT should focus on the project's largest contributors to CO_2e and may subject less significant contributors for CO_2e to less stringent BACT review.[13]

3.1. STEP 1 – IDENTIFY ALL AVAILABLE CONTROL TECHNOLOGIES

Available control technologies with the practical potential for application to the emission unit and regulated air pollutant in question are identified. Available control options include the application of alternate production processes and control methods, systems, and techniques including fuel cleaning and innovative fuel combustion, when applicable and consistent with the proposed project. The application of demonstrated control technologies in other similar source categories to the emission unit in question can also be considered. While identified technologies may be eliminated in subsequent steps in the analysis based on technical and economic infeasibility or environmental, energy, economic or other impacts, control technologies with potential application to the emission unit under review are identified in this step.

Under Step 1 of a criteria pollutant BACT analysis, the following resources are typically consulted when identifying potential technologies:

1. EPA's Reasonably Available Control Technology (RACT)/Best Available Control Technology (BACT)/Lowest Achievable Emission Reduction (LAER) Clearinghouse (RBLC) database;
2. Determinations of BACT by regulatory agencies for other similar sources or air permits and permit files from federal or state agencies;
3. Engineering experience with similar control applications;
4. Information provided by air pollution control equipment vendors with significant market share in the industry; and/or
5. Review of literature from industrial technical or trade organizations.

For GHGs, XTO will rely on items (2) through (5) and preliminary information from the EPA BACT GHG Workgroup for data to establish BACT.

EPA's "top-down" BACT analysis procedure also recommends the consideration of inherently lower emitting processes as available control options under Step 1.[14] For GHG BACT analyses, low-carbon intensity fuel selection is the primary control option that can be considered a lower emitting process. XTO proposes the use of

[11] *PSD and Title V Permitting Guidance for Greenhouse Gases*. March 2011, page 17.

[12] Ibid, pages 22-23.

[13] Ibid, page 31.

[14] Ibid, page 24.

pipeline quality natural gas only for all combustion equipment associated with the proposed project. Table C-1 of 40 CFR Part 98 shows CO_2 emissions per unit heat input (MMBtu) for a wide variety of industrial fuel types. Only biogas (captured methane) and coke oven gas result in lower CO_2 emissions per unit heat input than natural gas, but these fuel types are not readily available for this project.

Additionally, EPA's GHG BACT guidance suggests that carbon capture and sequestration (CCS) be evaluated as an available control for substantial, large projects such as steel mills, refineries, and cement plants where CO_2e emissions levels are in the order of 1,000,000 tpy, or for industrial facilities with high-purity CO_2 streams.[15] However, EPA explained that "this does not necessarily mean CCS should be selected as BACT for such sources."

3.2. STEP 2 – ELIMINATE TECHNICALLY INFEASIBLE OPTIONS

After the available control technologies have been identified, each technology is evaluated with respect to its technical feasibility in controlling individual pollutant emissions from the source in question. The first question in determining whether a technology is feasible is whether it is demonstrated. Whether or not a control technology is demonstrated is a relatively straightforward determination, although a source may cite specific site-specific differences to eliminate a technology form consideration.

> Demonstrated "means that it has been installed and operated successfully elsewhere on a similar facility." *Prairie State*, slip op. at 45. "This step should be straightforward for control technologies that are demonstrated--if the control technology has been installed and operated successfully on the type of source under review, it is demonstrated, and it is technically feasible."[16]

An undemonstrated technology is only technically feasible if it is "available" and "applicable." A control technology or process is only considered available if it has reached the licensing and commercial sales phase of development and is "commercially available".[17] Control technologies in the R&D and pilot scale phases are not considered available. Based on EPA guidance, an available control technology is presumed to be applicable if it has been permitted or actually implemented by a similar source. Decisions about technical feasibility of a control option consider the physical or chemical properties of the emissions stream in comparison to emissions streams from similar sources successfully implementing the control alternative. The NSR Manual explains the concept of applicability as follows: "An available technology is "applicable" if it can reasonably be installed and operated on the source type under consideration."[18] Applicability of a technology is determined by technical judgment and consideration of the use of the technology on similar sources as described in the NSR Manual.

3.3. STEP 3 – RANK REMAINING CONTROL TECHNOLOGIES BY CONTROL EFFECTIVENESS

All remaining technically feasible control options are ranked based on their overall control effectiveness for the pollutant under review. For GHGs, this ranking may be based on energy efficiency and/or emission rate.

---

[15] *PSD and Title V Permitting Guidance for Greenhouse Gases*. March 2011, pages 32-33.

[16] NSR Workshop Manual (Draft), Prevention of Significant Deterioration (PSD) and Nonattainment New Source Review (NNSR) Permitting, page B.17.

[17] Ibid, page B.18.

[18] Ibid, page B.18.

3.4. STEP 4 – EVALUATE MOST EFFECTIVE CONTROLS AND DOCUMENT RESULTS

After identifying and ranking available and technically feasible control technologies, the economic, environmental, and energy impacts are evaluated to select the best control option. If adverse collateral impacts do not disqualify the top-ranked option from consideration it is selected as the basis for the BACT limit. Alternatively, in the judgment of the permitting agency, if unreasonable adverse economic, environmental, or energy impacts are associated with the top control option, the next most stringent option is evaluated. This process continues until a control technology is identified. EPA recognized in its BACT guidance for GHGs that "[e]ven if not eliminated at Step 2 of the BACT analysis, on the basis of the current costs of CCS, we expect that CCS will often be eliminated from consideration in Step 4 of the BACT analysis, even in some cases where underground storage of the captured CO_2 near the power plant is feasible."[19]

The energy, environment, and economic impacts analysis under Step 4 of a GHG BACT assessment presents a unique challenge with respect to the evaluation of CO_2 and CH_4 emissions. The technologies that are most frequently used to control emissions of CH_4 in hydrocarbon-rich streams (e.g., flares, combustors and thermal oxidizers) actually convert CH_4 emissions to CO_2 emissions. Consequently, the reduction of one GHG (i.e., CH_4) results in a proportional increase in emissions of another GHG (i.e., CO_2). However, since the GWP of CH_4 is 21 times higher than CO_2, conversion of CH_4 emissions to CO_2 results in a net reduction of CO_2e emissions.

Permitting authorities have historically considered the effects of multiple pollutants in the application of BACT as part of the PSD review process, including the environmental impacts of collateral emissions resulting from the implementation of emission control technologies. To clarify the permitting agency's expectations with respect to the BACT evaluation process, states have sometimes prioritized the reduction of one pollutant above another. For example, technologies historically used to control NO_X emissions frequently caused increases in CO emissions. Accordingly, several states prioritized the reduction of NO_X emissions above the reduction of CO emissions, approving low NO_X control strategies as BACT that result in higher CO emissions relative to the uncontrolled emissions scenario.

3.5. STEP 5 – SELECT BACT

In the final step, the BACT emission limit is determined for each emission unit under review based on evaluations from the previous step.

Although the first four steps of the top-down BACT process involve technical and economic evaluations of potential control options (i.e., defining the appropriate technology), the selection of BACT in the fifth step involves an evaluation of emission rates achievable with the selected control technology. BACT is an emission limit unless technological or economic limitations of the measurement methodology would make the imposition of an emissions standard infeasible, in which case a work practice or operating standard can be imposed.

Establishing an appropriate averaging period for the BACT limit is a key consideration under Step 5 of the BACT process. Localized GHG emissions are not known to cause adverse public health or environmental impacts. Rather, EPA has determined that GHG emissions are anticipated to contribute to long-term environmental consequences on a global scale. Accordingly, EPA's Climate Change Workgroup has characterized the category of regulated GHGs as a "global pollutant." Given the global nature of impacts from GHG emissions, NAAQS are not established for GHGs in the Tailoring Rule and a dispersion modeling analysis for GHG emissions is not a required element of a PSD permit application for GHGs. Since localized short-term health and environmental effects from GHG emissions are not recognized, XTO proposes only an annual average GHG BACT limit.

---

[19] *PSD and Title V Permitting Guidance for Greenhouse Gases*. March 2011, pages 42-43.

For the Husky CDP, the BACT requirement applies to each emission unit from which there are emissions increases of pollutants subject to PSD review. The proposed facility is subject to PSD permitting for CO, NO_X, VOC, PM_{10}, $PM_{2.5}$, H_2SO_4 and GHGs. Therefore, the proposed project is subject to BACT analysis for these pollutants.

Table 4-1 identifies the pollutants considered in the PSD BACT analysis for each emission unit.

Table 4-1. Pollutants Evaluated in the BACT Analysis for Each Emission Unit

Equipment	NO_X (Yes/No)	CO (Yes/No)	$PM_{10}/PM_{2.5}$ (Yes/No)	VOC (Yes/No)	H_2SO_4 (Yes/No)	GHG (Yes/No)
Natural Gas-Fired Turbines	**Yes**	**Yes**	**Yes**	**Yes**	**Yes**	**Yes**
Emergency Natural Gas-Fired RICE	**Yes**	**Yes**	**Yes**	**Yes**	No	**Yes**
Heaters < 100 MMBtu/hr	**Yes**	**Yes**	**Yes**	**Yes**	No	**Yes**
Flares	**Yes**	**Yes**	**Yes**	**Yes**	No	**Yes**
VCD	**Yes**	**Yes**	**Yes**	**Yes**	No	**Yes**
Thermal Oxidizers	**Yes**	**Yes**	No	**Yes**	No	**Yes**
Produced Water Storage Tanks	No	No	No	**Yes**	No	No*
Slop Storage Tank	No	No	No	**Yes**	No	No*
Condensate Storage Tanks	No	No	No	**Yes**	No	No*
Gunbarrel Tank	No	No	No	**Yes**	No	No*
Internal Floating Roof (IFR) Tanks	No	No	No	**Yes**	No	No*
Fixed Roof Tank Cleanings	No	No	No	**Yes**	No	No*
IFR Tank Cleanings and Landings	No	No	No	**Yes**	No	No*
Truck Unloading of Condensate	No	No	No	**Yes**	No	No*
Truck Loading of Produced Water and Slop	No	No	No	**Yes**	No	No*
Process Fugitives	No	No	No	**Yes**	No	**Yes**
Amine Still Vents	No	No	No	**Yes**	No	**Yes**
Haul Roads	No	No	**Yes**	No	No	No*
Startup, Shutdown and Maintenance Activities	No	No	No	**Yes**	No	No*

* There are no methane or carbon dioxide fractions associated with these units; therefore, no GHG BACT is evaluated for this source.

The following sections provide detail on the BACT assessment methodology utilized in preparing the BACT analysis for the proposed Husky facility. The minimum control efficiency to be considered in a BACT assessment must result in an emission rate less than or equal to any applicable NSPS or NESHAP emission rate for the source.

4.1. IDENTIFICATION OF POTENTIAL CONTROL TECHNOLOGIES

Potentially applicable emission control technologies were identified by researching the U.S. EPA control technology database RACT/BACT/LAER Clearinghouse (RBLC), The Texas Commission on Environmental Quality's (TCEQ) BACT Guidelines, the California Air Resources Board's (CARB) Interim BACT Clearinghouse, technical literature, control equipment vendor information, state permitting authority files, and by using process knowledge and engineering experience. The RBLC, a database made available to the public through the U.S. EPA's Office of Air Quality Planning and Standards (OAQPS) Technology Transfer Network (TTN), lists technologies and corresponding emission limits that have been approved by regulatory agencies in major source permit actions. These technologies are grouped into industry categories and can be referenced in determining what emissions levels were proposed for similar types of emissions units.

A RBLC database search was performed in October 2019, to identify the emission control technologies and emission levels that were determined by permitting authorities as BACT within the past ten years for sources comparable to those proposed for Husky. The following categories were searched:

- Large Combined Cycle Combustion Turbines > 25MW (RBLC Code 15.210);
- Large Internal Combustion Engines > 500 hp (RBLC Code 17.130);
- Heaters > 100 MMBtu/hr (RBLC Code 12.310);
- Heaters < 100 MMBtu/hr (RBLC Code 13.310);
- Flares (RBLC Codes 19.330 and 19.390);
- Vapor Combustion (RBLC Codes 19.200 and 19.900);
- Fixed Roof Storage tanks (RBLC Codes 42.005 and 42.009);
- Internal Floating Roof Storage Tanks (RBLC Codes 42.006 and 42.009);
- Truck loading and unloading (RBLC Codes, 42.002, 42.010, 50.004 and 50.999);
- Fugitives (RBLC Code 50.007);
- Amine Units (RBLC Codes 50.002 and 50.006);
- Unpaved haul roads (RBLC Code 99.150); and
- SSM Activities (RBLC Codes 19.300, 42.004, 42.006 and 42.010)

Appendix A includes the RBLC search results. Since the RBLC database is still very limited in the number of entries for GHG emissions, XTO relied on items (2) through (5) and preliminary information from the EPA BACT GHG Workgroup for data to establish BACT.

Additionally, the following guidance documents were utilized as resources in completing the GHG BACT evaluation for the proposed project:

- *PSD and Title V Permitting Guidance for Greenhouse Gases (hereafter referred to as General GHG Permitting Guidance)*[20]
- *Available and Emerging Technologies for Reducing Greenhouse Gas Emissions from Industrial, Commercial, and Industrial Boilers (hereafter referred to as GHG BACT Guidance for Boilers)*[21]
- *Available and Emerging Technologies for Reducing Greenhouse Gas Emissions from the Petroleum Refining Industry (hereafter referred to as GHG BACT Guidance for Refineries)*[22]

---

[20] U.S. EPA, Office of Air and Radiation, Office of Air Quality Planning and Standards, (Research Triangle Park, NC: March 2011). http://www.epa.gov/nsr/ghgdocs/ghgpermittingguidance.pdf

[21] U.S. EPA, Office of Air and Radiation, Office of Air Quality Planning and Standards, (Research Triangle Park, NC: October 2010). http://www.epa.gov/nsr/ghgdocs/iciboilers.pdf

[22] U.S. EPA, Office of Air and Radiation, Office of Air Quality Planning and Standards, (Research Triangle Park, NC: October 2010). http://www.epa.gov/nsr/ghgdocs/refineries.pdf

4.2. PROPOSED PRIMARY BACT LIMITS SUMMARY

Based on BACT assessment, XTO proposes the BACT limits shown in Table 4-2. A detailed discussion of the determination for each emission source is provided in the following Sections of this report.

Table 4-2. Proposed Primary BACT Limits Summary

Unit	Pollutant	Limit	Proposed BACT
>25 MW Natural Gas Fired Combined Cycle Turbine	NO_x	2 ppmv @ 15% O_2	Dry Low-NO_x combustion and SCR
	CO	2 ppmv @ 15% O_2	Catalytic oxidation and good combustion practices
	VOC	4.6 ppmv @ 15% O_2	Catalytic oxidation and good combustion practices
	$PM_{10}/PM_{2.5}$ (filterable)	0.00786 lb/MMBtu	Natural gas fuel and good combustion practices
	H_2SO_4	0.75 gr S/scf	Natural gas fuel and good combustion practices
	CO_2e	117 lb/MMBtu	Natural gas fuel, good combustion practices
Large Stationary Reciprocating Internal Combustion Engines (Emergency Generators)	NO_x	1.00 g/hp-hr	Clean burn technology and good combustion practices
	CO	1.50 g/hp-hr	Good combustion practices
	VOC	0.21 g/hp-hr	Good combustion practices
	$PM_{10}/PM_{2.5}$ (filterable)	7.71E-05 lb/MMBtu	Natural gas fuel and good combustion practices
	CO_2e	379 g/hp-hr	Natural gas fuel and good combustion practices
Heaters < 100 MMBtu/hr	NO_x	0.0267 lb/MMBtu (Stab. & Regen)	Low NO_x burners and good combustion controls
	NO_x	0.034 lb/MMBtu (Cryo)	Low NO_x burners and good combustion controls
	CO	0.0163 lb/MMBtu	Good combustion controls
	VOC	0.0064 lb/MMBtu	Good combustion controls
	$PM_{10}/PM_{2.5}$ (filterable)	0.013 lb/MMBtu	Good combustion practices
	CO_2e	117 lb/MMBtu	Natural gas fuel and good combustion practices
Flare	NO_x, CO, VOC, $PM_{10}/PM_{2.5}$, CO_2e		Good flare design, good combustion, operating and maintenance practices and use of natural gas
VCD	NO_x, CO, VOC, $PM_{10}/PM_{2.5}$	Permitted Emission Rate	Good combustor design, good combustion, operating and maintenance practices and use of natural gas
	CO_2e	0.25 lb/scf	Good combustor design, good combustion, operating and maintenance practices and use of natural gas

Thermal Oxidizer	NO_x	30 ppmv @ 3% O_2	Low NO_X burners and good combustion controls
	CO	50 ppmv @ 3% O_2	Good combustion controls
	VOC	Permitted Emission Rate	Good combustion controls
	CO_2e		Proper design, low carbon fuel selection, good combustion, operating and maintenance practices.
Fixed Roof Tanks	VOC	99% DRE	Routed to vapor combustion device.
Internal Floating Roof Tanks	VOC		Floating roof, white or aluminum. Primary and secondary seal. Tanks vented to control device.
Truck Loading and Unloading	VOC	99% DRE	Routed to vapor combustion device.
Fugitives	VOC		LDAR Program under 40 CFR 60 Subpart OOOOa
Amine Units	VOC	99% DRE	Good combustion design controls, good combustion, operating and maintenance practices. Vented to thermal oxidizers.
	CO_2e		Thermal incineration, condensers, flash gas recovery and proper design and operation.
Haul Roads	$PM_{10}/PM_{2.5}$	57% & 60% Reduction	Speed limit and base course, respectively.
SSM Activities	VOC	98% DRE	Good combustion design controls, good combustion, operating and maintenance practices. Vented to a control device.

4.3. OVERALL PROJECT EFFICIENCY CONSIDERATIONS

While the five-step BACT analysis is the EPA's preferred methodology with respect to selection of control technologies for pollutants, EPA has also indicated that an overarching evaluation of energy efficiency should take place as increases in energy efficiency will inherently reduce the total amount of GHG emissions produced by the source. As such, overall energy efficiency was a basic design criterion in the selection of technologies and processing alternatives to be installed at the proposed Husky Central Delivery Point.

The Husky Central Delivery Point will be designed and constructed using new or updated energy efficient equipment. The plant was designed with heat and process integration in mind for increased energy efficiency. Where feasible, the facility will utilize available process streams to transfer heat which reduces combustion heating requirements in the process. In addition, as provided in Section 3 of the application, XTO is proposing three operating scenarios: 1) Operation of the facility without cogeneration turbines and full heater buildout, 2) Operation of the facility with cogeneration turbines with reduced heater buildout, and 3) Combination of turbines and heater use during turbine downtime. The combustion turbines will also include steam recovery to generate additional electricity for the proposed plant as well as other XTO facilities. Equipment (vessels), piping, and components in hot service to will be designed to prevent heat loss to the atmosphere from equipment containing hot streams.

The facility will recycle the flash gas from the amine units, and flash gas and still vent heat from the TEG reboiler back to the fuel gas system instead of sending these vents to a control device. The recycling of this material will reduce the amount of natural gas required to fuel the facility's combustion sources and will avoid the formation of additional GHG from combusting this material in a control device.

Process control instrumentation and pneumatic components will be operated using compressed air rather than fuel gas or off-gas; therefore, no GHG emissions will be emitted to the atmosphere from these components. The plant will be built using new, state-of-the-art equipment and process instrumentation and controls. XTO operating and maintenance policies will maintain all equipment according to manufacturer specifications in order to keep all equipment operating efficiently.

Table 4-3 Summary of Proposed Good Combustion Practices [1]

Good Combustion Technique	Practice	Applicable Units	Standard
Operator practices	• Official documented operating procedures, updated as required for equipment or practice change • Procedures include startup, shutdown, malfunction • Operating logs/record keeping	All combustion units	• Maintain written site-specific operating procedures in accordance with GCPs, including startup, shutdown, and malfunction
Maintenance knowledge	• Training on applicable equipment & procedures	All combustion units	• Equipment maintained by personnel with training specific to equipment
Maintenance practices	• Official documented maintenance procedures, updated as required for equipment or practice change • Routinely scheduled evaluation, inspection, overhaul as appropriate for equipment involved • Maintenance logs/record keeping	All combustion units	• Maintain site specific procedures for best/optimum maintenance practices • Scheduled periodic evaluation, inspection, and overhaul as appropriate
Firebox (furnace) residence time, temperature, turbulence	• Supplemental stream injection into active flame zone • Residence time by design (incinerators) • Minimum combustion chamber temperature (incinerators)	Thermal Oxidizers and Flares	
Fuel quality analysis and fuel handling	• Monitor fuel quality • Periodic fuel sampling and analysis • Fuel handling practices • DBJVG will use clean and treated field gas as fuel	All combustion units	• Fuel analysis where composition could vary • Fuel handling procedures applicable to the fuel
Combustion air distribution	• Adjustment of air distribution system based on visual observations • Adjustment of air distribution based on continuous or periodic monitoring	All combustion units	• Routine & periodic adjustments & checks

[1] EPA Guidance document "Good Combustion Practices" available at: http://www.epa.gov/ttn/atw/iccr/dirss/gcp.pdf.

5. BACT EVALUATION FOR NATURAL GAS-FIRED COMBINED CYCLE TURBINES

The BACT evaluation for the proposed natural gas-fired combined cycle turbines (Units TUR1 through TUR4) for NO_X, CO, VOC, $PM_{10}/PM_{2.5}$, H_2SO_4 and GHG (as CO_2e) is provided in Sections 5.1 through 5.6. Appendix A provides a summary of RBLC and permit search results.

5.1. NO_X BACT

5.1.1. Background on Pollutant Formation

In combustion processes, NO_X is formed by two fundamentally different mechanisms known as "fuel NO_X" and "thermal NO_X". NO_X formation from natural gas combustion is primarily thermal NO_X.

"Fuel NO_X" forms when fuels containing nitrogen are burned. When these fuels are burned, the nitrogen bonds break and some of the resulting free nitrogen oxidizes to form NO_X. With excess air, the degree of fuel NO_X formation is primarily a function of the nitrogen content of the fuel. Therefore, since natural gas contains little or no fuel-bound nitrogen, fuel NO_X is not a major contributor to NO_X emissions from natural gas-fired turbines.[23]

Thermal NO_X is formed by a series of chemical reactions in which oxygen and nitrogen present in the combustion air dissociate and react to form NO_X. Prompt NO_X, a form of thermal NO_X, is formed in the proximity of the flame front as intermediate combustion products (e.g., HCN, N, and NH) are oxidized to form NO_X. In addition to prompt NO_X, thermal NO_X is formed through the Zeldovich mechanism. The amount of NO_X generated through this mechanism increases exponentially as a function of temperature and linearly as a function of residence time. The rate of NO_X generation decreases significantly at temperatures below 2,780 ˚F. Therefore, reducing combustion temperature is a common approach to reducing NO_X emissions.[24]

In lean premix combustion systems such as those to be used at Husky, atmospheric nitrogen acts as a diluent as fuel is mixed with air upstream of the combustor at fuel-lean conditions. The air-to-fuel ratio is maintained well below the ideal stoichiometric level to limit NO_X formation as lean conditions do not produce the high temperatures that create thermal NO_X. In addition, premixing prevents local "hot spots" within the combustor that can lead to significant NO_X formation. [25]

5.1.2. Identify All Available Control Technologies

NO_X reduction in natural gas-fired turbines can be accomplished by combustion control techniques and post-combustion control methods. Combustion control techniques incorporate fuel or air staging that affect the kinetics of NO_X formation (i.e., by reducing peak flame temperature) or introduce inerts (combustion products, for example) that limit initial NO_X formation, or both. Post-combustion NO_X control technologies employ various strategies to chemically reduce NO_X to elemental nitrogen (N_2) with or without the use of a catalyst.

Using the RBLC search and permit review results, as well as a review of technical literature, potentially applicable NO_X control technologies for natural gas-fired combined cycle turbines were identified based on the

[23] U.S. DOE, Office of Fossil Energy, National Technology Energy Laboratory, *The Gas Turbine Handbook*, 2006. http://www.netl.doe.gov/technologies/coalpower/turbines/refshelf/handbook/TableofContents.html

[24] Ibid.

[25] Ibid.

principles of control technology and engineering experience for general combustion units. Table 5-1 outlines the top down BACT analysis for NO_X emissions from the turbines.

5.1.3. Selection of BACT for NO_X

The most stringent RBLC and permit entries for NO_X control are provided in Appendix A. XTO has determined that NO_X BACT for normal operation is a limit of 2 ppmv @ 15% O_2 utilizing Selective Catalytic Reduction (SCR) and good combustion practices.

Table 5-1. BACT Analysis for Natural Gas-Fired Combined Cycle Turbines - NO_X

Table 5-1 BACT Analysis for Natural Gas Fired Combined Cycle Turbines – NO_X

		Control Technology	Selective Catalytic Reduction (SCR)[a]	Low NO_X Burners[b]	Combustion Design Controls	Water/Steam Injection[d]	Good Combustion Controls (Dry Low-NO_X Combustors)[e]
Step 1.	IDENTIFY AIR POLLUTION CONTROL TECHNOLOGIES	Control Technology Description	A nitrogen-based reagent (e.g., ammonia, urea) is injected into the exhaust stream downstream of the combustion unit. The reagent reacts selectively with NO_X to produce molecular N_2 and water in a reactor vessel containing a metallic or ceramic catalyst.	NOx control from these special burners is based on combustion modification techniques. Precise mixing of fuel and air is used to keep the flame temperature low and to dissipate heat quickly through the use of low excess air, off stoichiometric combustion and combustion gas recirculation.	NO_X emissions are caused by oxidation of nitrogen gas in the combustion air during fuel combustion. This occurs due to high combustion temperatures and insufficiently mixed air and fuel in the cylinder where pockets of excess oxygen occur. These effects can be minimized through air-to-fuel ratio control, ignition timing reduction, and exhaust gas recirculation.	Injected water/steam acts as a heat sink, lowing combustion zone peak temperatures, resulting in a decrease in thermal NO_X.	Low NOx burners reduce NOx by accomplishing the combustion process in stages. Staging partially delays the combustion process, resulting in a cooler flame which suppresses thermal NOx formation.
		Typical Operating Temperature	480 - 800 °F (variations of ± 200 °F)	N/A	N/A	N/A	N/A
		Typical Waste Stream Inlet Flow Rate	N/A	N/A	N/A	N/A	N/A
		Typical Waste Stream Inlet Pollutant Concentration	As low as 20 ppm (efficiency improves with increased concentration up to 150 ppm)	N/A	N/A	N/A	N/A
		Other Considerations	Unreacted reagent may form ammonium sulfates which may plug or corrode downstream equipment. Particulate-laden streams may blind the catalyst and may necessitate the application of a sootblower.	N/A	N/A	Results in a small efficiency penalty but an increase in power output. May increase CO and VOC emissions.	N/A
Step 2.	ELIMINATE TECHNICALLY INFEASIBLE OPTIONS	RBLC Database Information	Included in RBLC for the control of NO_X emissions from natural gas fired turbines.	Included in RBLC for the control of NO_X emissions from natural gas fired turbines.	Included in RBLC for the control of NO_X emissions from natural gas fired turbines.	Included in RBLC for the control of NO_X emissions from large combustion turbines.	Included in RBLC for the control of NO_X emissions from large combustion turbines.
		Feasibility Discussion	Technically feasible.	Technically feasible.	Technically feasible.	Technically Feasible	Technically Feasible
Step 3.	RANK REMAINING CONTROL TECHNOLOGIES	Overall Control Efficiency	70 - 90+% (2 ppmv)	80%	Base Case	30-50%	40-85%
Step 4.	EVALUATE AND DOCUMENT MOST EFFECTIVE CONTROLS	Cost Effectiveness ($/ton)					
Step 5.	SELECT BACT		2 ppmv NO_X @ 15% O_2[c]				

a. U.S. EPA, Office of Air Quality Planning and Standards, "Air Pollution Control Technology Fact Sheet (Selective Catalytic Reduction (SCR))," EPA-452/F-03-032.
b. U.S. EPA, Office of Air Quality Planning and Standards, "Technical Bulletin Nitrogen Oxides (NOx), Why and How They are Controlled)," EPA 456/F-99-006R.
c. Per manufacture emission specifications.
d. U.S. EPA, AP-42 Section 3.1, "Stationary Gas Turbines"
e. U.S. EPA, AP-42 Section 1.4, "Natural Gas Combustion"

5.2. CO BACT

5.2.1. Background on Pollutant Formation

CO from natural gas-fired turbines is a by-product of incomplete combustion. Conditions leading to incomplete combustion include insufficient oxygen availability, poor fuel/air mixing, reduced combustion temperature, reduced combustion gas residence time, and load reduction.

5.2.2. Identify All Available Control Technologies

Using the RBLC search and permit review results, as well as a review of technical literature, potentially applicable CO control technologies for combined cycle turbines were identified based on the principles of control technology and engineering experience for general combustion units. Table 5-2 outlines the top-down BACT analysis for CO emissions from the turbine.

5.2.3. Selection of BACT for CO

The most stringent RBLC and permit entries for CO control are provided in Appendix A. XTO has determined that CO BACT for normal operation is a limit of 2 ppmv @ 15% O_2 using catalytic oxidation and good combustion practices.

Table 5-2. BACT Analysis for Natural Gas-Fired Combined Cycle Turbines - CO

Table 5-2 BACT Analysis for Natural Gas Fired Combined Cycle Turbines – CO

		Control Technology	Regenerative Thermal Oxidizer [b]	Recuperative Thermal Oxidizer [b,c]	Catalytic Oxidation[e]	Good Combustion Controls
Step 1.	IDENTIFY AIR POLLUTION CONTROL TECHNOLOGIES	Control Technology Description	Oxidizes combustible materials by raising the temperature of the material above the auto-ignition point in the presence of oxygen and maintaining the high temperature for sufficient time to complete combustion. Regenerative oxidizers usually use multiple energy recovery chambers and ceramic media to store the heat used to pre-heat the inlet stream.	Oxidizes combustible materials by raising the temperature of the material above the auto-ignition point in the presence of oxygen and maintaining the high temperature for sufficient time to complete combustion. Recuperative oxidizers utilize the process exhaust vent stream to preheat the inlet stream entering the oxidizer.	Similar to thermal oxidation; waste stream is heated by a flame and then passes through a catalyst bed that increases the oxidation rate more quickly and at lower temperatures.	Operation of the unit at the appropriate oxygen range and temperature to promote complete combustion and minimize CO formation.
		Typical Operating Temperature	1,400 - 1,500 °F	1,100 - 1,200 °F	600 - 800 °F (not to exceed 1,250 °F)	N/A
		Typical Waste Stream Inlet Flow Rate	5,000 - 500,000 scfm	500 - 50,000 scfm	700 - 50,000 scfm	N/A
		Typical Waste Stream Inlet Pollutant Concentration	As low as 100 ppmv or less	As low as 100 ppmv or less	As low as 2 ppmv	N/A
		Other Considerations	Additional fuel is required to reach the ignition temperature of the waste gas stream. Oxidizers are not recommended for controlling gases with sulfur containing compounds because of the formation of highly corrosive acid gases.[a]	Additional fuel is required to reach the ignition temperature of the waste gas stream. Oxidizers are not recommended for controlling gases with sulfur containing compounds because of the formation of highly corrosive acid gases.[c]	Oxidation efficiency depends on exhaust flow rate and composition. Residence time required for oxidation to take place at the active sites of the catalyst may not be achieved if exhaust flow rates exceed design specifications. Also, sulfur and other compounds may foul the catalyst, leading to decreased efficiency.	N/A
Step 2.	ELIMINATE TECHNICALLY INFEASIBLE OPTIONS	RBLC Database Information	Not included in RBLC for the control of CO emissions from large natural gas-fired turbines.	Not included in RBLC for the control of CO emissions from large natural gas-fired turbines.	Included in RBLC for control of CO emissions from natural gas-fired turbines.	Included in RBLC for the control of CO emissions from natural gas-fired turbines.
		Feasibility Discussion	Technically infeasible. Thermal oxidizers do not reduce emissions of CO from properly operated natural gas combustion units without the use of a catalyst.	Technically infeasible. Thermal oxidizers do not reduce emissions of CO from properly operated natural gas combustion units without the use of a catalyst.	Feasible	Feasible
Step 3.	RANK REMAINING CONTROL TECHNOLOGIES	Overall Control Efficiency			70-90% (min. 2 ppmv)	Base Case
Step 4.	EVALUATE AND DOCUMENT MOST EFFECTIVE CONTROLS	Cost Effectiveness ($/ton)				
Step 5.	SELECT BACT				2 ppmv CO @ 15% O_2 [f]	

a. U.S. EPA, Office of Air Quality Planning and Standards, "Air Pollution Control Technology Fact Sheet (Thermal Incinerator)," EPA-452/F-03-022.
b. U.S. EPA, Office of Air Quality Planning and Standards, "Air Pollution Control Technology Fact Sheet (Regenerative Incinerator)," EPA-452/F-03-021.
c. U.S. EPA, Office of Air Quality Planning and Standards, "Air Pollution Control Technology Fact Sheet (Recuperative Incinerator)," EPA-452/F-03-020.
d. California EPA, Air Resources Board, "Report to the Legislature: Gas-Fired Power Plant NO_X Emission Controls and Related Environmental Impacts," http://www.arb.ca.gov/research/apr/reports/l2069.pdf.
e. U.S. EPA, Office of Air Quality Planning and Standards, "Air Pollution Control Technology Fact Sheet (Catalytic Incinerator)," EPA-452/F-03-018.

5.3. VOC BACT

5.3.1. Background on Pollutant Formation

The formation of VOC is the result of incomplete combustion. VOC results when there is insufficient residence time at high temperature to complete the final step in hydrocarbon oxidation.

5.3.2. Identify All Available Control Technologies

Using the RBLC search and permit review results, as well as a review of technical literature, potentially applicable VOC control technologies for natural gas-fired turbines were identified based on the principles of control technology and engineering experience for general combustion units. Table 5-3 outlines the top-down BACT analysis for VOC emissions from the turbine. Generally, the control technologies for VOC are identical to those for CO.

5.3.3. Selection of BACT for VOC

The most stringent RBLC and permit entries for VOC control are provided in Appendix A. XTO has determined that VOC BACT for normal operation is a limit of 4.6 ppmv @ 15% O_2 using catalytic oxidation and good combustion practices.

Table 5-3. BACT Analysis for Natural Gas-Fired Combined Cycle Turbines - VOC

Table 5-3 BACT Analysis for Natural Gas Fired Combined Cycle Turbines – VOC

Step 1.	**IDENTIFY AIR POLLUTION CONTROL TECHNOLOGIES**	**Control Technology**	**Regenerative Thermal Oxidizer** [b]	**Recuperative Thermal Oxidizer** [b,c]	**Catalytic Oxidation** [d]	**Good Combustion Controls**
		Control Technology Description	Oxidizes combustible materials by raising the temperature of the material above the auto-ignition point in the presence of oxygen and maintaining the high temperature for sufficient time to complete combustion. Regenerative oxidizers usually use multiple energy recovery chambers and ceramic media to store the heat used to pre-heat the inlet stream.	Oxidizes combustible materials by raising the temperature of the material above the auto-ignition point in the presence of oxygen and maintaining the high temperature for sufficient time to complete combustion. Recuperative oxidizers utilize the process exhaust vent stream to preheat the inlet stream entering the oxidizer.	Similar to thermal oxidation; waste stream is heated by a flame and then passes through a catalyst bed that increases the oxidation rate more quickly and at lower temperatures.	Operation of the unit at the appropriate oxygen range and temperature to promote complete combustion and minimize CO formation.
		Typical Operating Temperature	1,400 - 1,500 °F	1,100 - 1,200 °F	600 - 800 °F (not to exceed 1,250 °F)	N/A
		Typical Waste Stream Inlet Flow Rate	5,000 - 500,000 scfm	500 - 50,000 scfm	700 - 50,000 scfm	N/A
		Typical Waste Stream Inlet Pollutant Concentration	As low as 100 ppmv or less	As low as 100 ppmv or less	As low as 1 ppmv	N/A
		Other Considerations	Additional fuel is required to reach the ignition temperature of the waste gas stream. Oxidizers are not recommended for controlling gases with sulfur containing compounds because of the formation of highly corrosive acid gases.[a]	Additional fuel is required to reach the ignition temperature of the waste gas stream. Oxidizers are not recommended for controlling gases with sulfur containing compounds because of the formation of highly corrosive acid gases.[c]	Oxidation efficiency depends on exhaust flow rate and composition. Residence time required for oxidation to take place at the active sites of the catalyst may not be achieved if exhaust flow rates exceed design specifications. Also, sulfur and other compounds may foul the catalyst, leading to decreased efficiency.	N/A
Step 2.	**ELIMINATE TECHNICALLY INFEASIBLE OPTIONS**	**RBLC Database Information**	Not included in RBLC for the control of VOC emissions from large natural gas-fired turbines.	Not included in RBLC for the control of VOC emissions from large natural gas-fired turbines.	Included in RBLC for control of VOC emissions from natural gas-fired turbines.	Included in RBLC for the control of VOC emissions from natural gas fired turbines.
		Feasibility Discussion	Technically infeasible. Thermal oxidizers do not reduce emissions of VOC from properly operated natural gas combustion units without the use of a catalyst.	Technically infeasible. Thermal oxidizers do not reduce emissions of VOC from properly operated natural gas combustion units without the use of a catalyst.	Feasible	Feasible
Step 3.	**RANK REMAINING CONTROL TECHNOLOGIES**	**Overall Control Efficiency**			20-40%	Base Case
Step 4.	**EVALUATE AND DOCUMENT MOST EFFECTIVE CONTROLS**	**Cost Effectiveness ($/ton)**				
Step 5.	**SELECT BACT**				4.6 ppmv CO @ 15% O_2 [e]	

a. U.S. EPA, Office of Air Quality Planning and Standards, "Air Pollution Control Technology Fact Sheet (Thermal Incinerator)," EPA-452/F-03-022.
b. U.S. EPA, Office of Air Quality Planning and Standards, "Air Pollution Control Technology Fact Sheet (Regenerative Incinerator)," EPA-452/F-03-021.
c. U.S. EPA, Office of Air Quality Planning and Standards, "Air Pollution Control Technology Fact Sheet (Recuperative Incinerator)," EPA-452/F-03-020.
d. U.S. EPA, Office of Air Quality Planning and Standards, "Air Pollution Control Technology Fact Sheet (Catalytic Incinerator)," EPA-452/F-03-018.
e. Per manufacture emission specifications.

5.4. $PM_{10}/PM_{2.5}$ BACT

5.4.1. Background on Pollutant Formation

Filterable PM emissions from combustion are formed by ash and sulfur in the fuel. Combustion of natural gas generates low filterable PM emissions in comparison to other fuels due to its low ash and sulfur contents. Condensable particulate matter results from sulfur in the fuel and the resultant H_2SO_4 and NO_X being oxidized to nitric acid (HNO_3) and high molecular weight organics.

5.4.2. Identify All Available Control Technologies

Using the RBLC search and permit review results, as well as a review of technical literature, potentially applicable particulate control technologies were identified based on the principles of control technology and engineering experience for general combustion units. Table 5-4 outlines the top-down BACT analysis for particulate emissions from the turbines.

5.4.3. Selection of BACT for $PM_{10}/PM_{2.5}$

Based on the review of the RBLC search and other permit review results, XTO has determined that the $PM_{10}/PM_{2.5}$ BACT limit is 0.00786 lb/MMBtu, which can be achieved by implementing good combustion practices and the use of only pipeline quality natural gas (fuel specifications).

Table 5-4. BACT Analysis for Natural Gas-Fired Combined Cycle Turbines – $PM_{10}/PM_{2.5}$

Table 5-4 BACT Analysis for Natural Gas Fired Combined Cycle Turbines – PM_{10} and $PM_{2.5}$

Step 1.	**IDENTIFY AIR POLLUTION CONTROL TECHNOLOGIES**	**Control Technology**	**Baghouse / Fabric Filter[a]**	**Electrostatic Precipitator (ESP)[b,c,d]**	**Cyclone[e]**	**Fuel Specifications**	**Good Combustion Practices**
		Control Technology Description	Process exhaust gas passes through a tightly woven or felted fabric arranged in sheets, cartridges, or bags that collect PM via sieving and other mechanisms. The dust cake that accumulates on the filters increases collection efficiency. Various cleaning techniques include pulse-jet, reverse-air, and shaker technologies.	Electrodes stimulate the waste gas and induce an electrical charge in the entrained particles. The resulting electrical field forces the charged particles to the collector walls from which the material may be mechanically dislodged and collected in dry systems or washed with a water deluge in wet systems.	Centrifugal forces drive particles in the gas stream toward the cyclone walls as the waste gas flows through the conical unit. The captured particles are collected in a material hopper below the unit.	Use of pipeline quality natural gas results in minimal emissions.	Operate and maintain the equipment in accordance with good combustion practices.
		Typical Operating Temperature	Up to 500 °F (Typical)	Up to 1,300 °F (dry) Lower than 170 - 190 °F (wet)	Up to 1,000 °F	N/A	N/A
		Typical Waste Stream Inlet Flow Rate	100 - 100,000 scfm (Standard) 100,000 - 1,000,000 scfm (Custom)	1,000 - 100,000 scfm (Wire-Pipe) 100,000 - 1,000,000 scfm (Wire-Plate)	1.1 - 63,500 scfm (single) Up to 106,000 scfm (in parallel)	N/A	N/A
		Typical Waste Stream Inlet Pollutant Concentration	0.5 - 10 gr/dscf (Typical) 0.05 - 100 gr/dscf (Achievable)	0.5 - 5 gr/dscf (Wire-Pipe) 1 - 50 gr/dscf (Wire-Plate)	0.44 - 7,000 gr/dscf	N/A	N/A
		Other Considerations	Fabric filters are susceptible to corrosion and blinding by moisture. Appropriate fabrics must be selected for specific process conditions. Accumulations of dust may present fire or explosion hazards.	Dry ESP efficiency varies significantly with dust resistivity. Air leakage and acid condensation may cause corrosion. ESPs are not generally suitable for highly variable processes. Equipment footprint is often substantial.	Cyclones typically exhibit lower efficiencies when collecting smaller particles. High-efficiency units may require substantial pressure drop.	N/A	N/A
Step 2.	**ELIMINATE TECHNICALLY INFEASIBLE OPTIONS**	**RBLC Database Information**	Not included in RBLC for the control of PM emissions for natural gas-fired turbines.	Not included in RBLC for the control of PM emissions for natural gas-fired turbines.	Not included in RBLC for the control of PM emissions for natural gas-fired turbines.	Included in RBLC for the control of PM emissions from large natural gas-fired turbines.	Included in RBLC for the control of PM emissions from large natural gas-fired turbines.
		Feasibility Discussion	Technically Infeasible. Natural-gas fired turbines generate low PM emissions and have large exhaust flowrates, resulting in very low concentrations of PM. Add-on control devices would not provide any measurable emission reduction.	Technically Infeasible. Natural-gas fired turbines generate low PM emissions and have large exhaust flowrates, resulting in very low concentrations of PM. Add-on control devices would not provide any measurable emission reduction.	Technically Infeasible. Natural-gas fired turbines generate low PM emissions and have large exhaust flowrates, resulting in very low concentrations of PM. Add-on control devices would not provide any measurable emission reduction.	Feasible	Feasible
Step 3.	**RANK REMAINING CONTROL TECHNOLOGIES**	**Overall Control Efficiency**				Base Case	Base Case
Step 4.	**EVALUATE AND DOCUMENT MOST EFFECTIVE CONTROLS**	**Cost Effectiveness ($/ton)**					
Step 5.	**SELECT BACT**					0.00786 lb/MMBtu	

a. U.S. EPA, Office of Air Quality Planning and Standards, "Air Pollution Control Technology Fact Sheet (Fabric Filter - Pulse-Jet Cleaned Type)," EPA-452/F-03-025.
b. U.S. EPA, Office of Air Quality Planning and Standards, "Air Pollution Control Technology Fact Sheet (Dry Electrostatic Precipitator (ESP) - Wire-Pipe Type)," EPA-452/F-03-027.
c. U.S. EPA, Office of Air Quality Planning and Standards, "Air Pollution Control Technology Fact Sheet (Dry Electrostatic Precipitator (ESP) - Wire-Plate Type)," EPA-452/F-03-028.
d. U.S. EPA, Office of Air Quality Planning and Standards, "Air Pollution Control Technology Fact Sheet (Wet Electrostatic Precipitator(ESP) - Wire-Pipe Type)," EPA-452/F-03-029.
e. U.S. EPA, Office of Air Quality Planning and Standards, "Air Pollution Control Technology Fact Sheet (Cyclone)," EPA-452/F-03-005.

5.5. H_2SO_4 BACT

5.5.1. Background on Pollutant Formation

During normal operations, fuel sulfur oxidizes to form SO_2; however, a small portion of the sulfur may initially oxidize directly to SO_3. Additionally, a small portion of the fuel sulfur which initially oxidizes to form SO_2 may subsequently oxidize to form SO_3 prior to being emitted. SO_2 is expected to convert to SO_3 as it passes through both the oxidation catalyst and SCR system. This SO_3 then reacts with water vapor in the effluent gas to form H_2SO_4.

5.5.2. Identify All Available Control Technologies

Using the RBLC search and permit review results, as well as a review of technical literature, potentially applicable control technologies were identified based on the principles of control technology and engineering experience for general combustion units. Table 5-5 outlines the top-down BACT analysis for H_2SO_4 emissions from the turbines.

5.5.3. Selection of BACT for H_2SO_4

Based on the review of the RBLC search and other permit review results, XTO has determined that the formation of sulfuric acid mist will be limited by limiting the fuel sulfur content of the natural gas. XTO has determined that the H_2SO_4 BACT limit is 0.75 gr S/scf, which can be achieved by implementing good combustion practices and the use of only pipeline quality natural gas (fuel specifications).

Table 5-5. BACT Analysis for Natural Gas-Fired Combined Cycle Turbines – H_2SO_4

Table 5-5. BACT Analysis for Natural Gas Fired Combined Cycle Turbines – H_2SO_4

		Control Technology	Flue Gas Desulfurization[a]	Electrostatic Precipitator (ESP)[b,c,d]	Fuel Specifications
Step 1.	IDENTIFY AIR POLLUTION CONTROL TECHNOLOGIES	Control Technology Description	Acid gas is contacted with an alkaline reagent, which results in the formation of neutral salts. Wet systems employ reagents using packed or spray towers and generate wastewater streams, while dry systems inject slurry reagent into the exhaust stream to react, dry and be removed downstream by particulate control equipment.	Electrodes stimulate the waste gas and induce an electrical charge in the entrained particles. The resulting electrical field forces the charged acid mist particles to the collector walls from which the material may be mechanically dislodged and collected in dry systems or washed with a water deluge in wet systems.	Combusting only natural gas, which has an inherently low sulfur content, rather than higher sulfur content fuels alone or in combination with natural gas.
		Typical Operating Temperature	300 - 700 °F (wet) 300 - 1,830 °F (dry)	Up to 1,300 °F (dry) Lower than 170 - 190 °F (wet)	N/A
		Typical Waste Stream Inlet Flow Rate	N/A	1,000 - 100,000 scfm (Wire-Pipe) 100,000 - 1,000,000 scfm (Wire-Plate)	N/A
		Typical Waste Stream Inlet Pollutant Concentration	2,000 ppmv	0.5 - 5 gr/dscf (Wire-Pipe) 1 - 50 gr/dscf (Wire-Plate)	N/A
		Other Considerations	Chlorine emissions can result in salt deposition within the absorber and in downstream equipment. Wet systems may require flue gas re-heating downstream of the absorber to prevent corrosive condensation. Inlet streams for dry systems must be cooled as appropriate, and dry systems require use of particulate controls to collect the solid neutral salts.	Dry ESP efficiency varies significantly with dust resistivity. Air leakage and acid condensation may cause corrosion. ESPs are not generally suitable for highly variable processes. Equipment footprint is often substantial.	N/A
Step 2.	ELIMINATE TECHNICALLY INFEASIBLE OPTIONS	RBLC Database Information	Not included in RBLC for the control of H_2SO_4 emissions for natural gas-fired turbines.	Not included in RBLC for the control of H_2SO_4 emissions for natural gas-fired turbines.	Included in RBLC for the control of H_2SO_4 from natural gas-fired turbines.
		Feasibility Discussion	Technically infeasible. Technology has not been applied to natural gas turbines due to very low H_2SO_4 emissions. Controls would not provide any measurable emission reduction.	Technically infeasible. Technology has not been applied to natural gas turbines due to very low H_2SO_4 emissions. Controls would not provide any measurable emission reduction.	Feasible
Step 3.	RANK REMAINING CONTROL TECHNOLOGIES	Overall Control Efficiency			Base Case
Step 4.	EVALUATE AND DOCUMENT MOST EFFECTIVE CONTROLS	Cost Effectiveness ($/ton)			
Step 5.	SELECT BACT				0.75 gr S/scf

a. U.S. EPA, Office of Air Quality Planning and Standards, "Air Pollution Control Technology Fact Sheet (Flue Gas Desulfurization)," EPA-452/F-03-034.
b. U.S. EPA, Office of Air Quality Planning and Standards, "Air Pollution Control Technology Fact Sheet (Dry Electrostatic Precipitator (ESP) - Wire-Pipe Type)," EPA-452/F-03-027.
c. U.S. EPA, Office of Air Quality Planning and Standards, "Air Pollution Control Technology Fact Sheet (Dry Electrostatic Precipitator (ESP) - Wire-Plate Type)," EPA-452/F-03-028.
d. U.S. EPA, Office of Air Quality Planning and Standards, "Air Pollution Control Technology Fact Sheet (Wet Electrostatic Precipitator(ESP) - Wire-Pipe Type)," EPA-452/F-03-029.

5.6. GHG BACT

5.6.1. Background on Pollutant Formation

The combustion of natural gas in the generating units results in emissions of CO_2, CH_4, and N_2O. Nearly one-hundred percent of combustion-related GHG emissions are in the form of CO_2 on a mass basis, since each carbon atom combusted in the fuel stream results in nearly one molecule of CO_2 emissions.[26] CH_4 and N_2O form as the result of incomplete combustion and are formed in much lower quantities. Even when scaling CH_4 and N_2O by their relative global warming potentials (GWPs), these constituents combined contribute approximately one percent of the total GHG emissions (on CO_2e basis) resulting from the combustion of natural gas. Therefore, the BACT assessment for the CCCT generating units is focused on CO_2. In addition, using CO_2 as a surrogate for CO_2e BACT analysis is consistent with federal regulations.[27] The following section presents a GHG BACT evaluation for the proposed CCCT generating units. This section details the BACT steps versus using a tabular format similar to the other pollutants due to the extent of the carbon capture and sequestration (CCS) discussion.

5.6.2. Step 1 - Identification of Potential Control Technologies

The available control technologies for controlling GHG emissions from the generating units are:

- Carbon Capture and Sequestration (CCS)
- Efficient Turbine Design
- Fuel Selection
- Good Combustion Practices

5.6.2.1. Carbon Capture and Sequestration (CCS)

CCS for the generating units would involve post-combustion capture of CO_2 emissions. The emissions are sequestered in some fashion, decreasing emissions of CO_2 to the atmosphere. One option is to use the captured CO_2 for Enhanced Oil Recovery (EOR). Carbon capture can be achieved with low pressure scrubbing of CO_2 from the exhaust stream with either solvents (e.g., amines or ammonia), solid sorbents, or membranes. However, only solvents have been used to-date on a commercial scale while the others are in the research and development phase.

Since the majority of GHG emissions from a combustion turbine are in the form of CO_2, decreasing CO_2 emissions would decrease GHG emissions by nearly the same fraction.

5.6.2.2. Efficient Turbine Design

In general, turbines which operate at higher temperatures have highest efficiencies. Increasing the efficiency of the turbines directly decreases GHG emissions as less fuel is combusted per unit output.

5.6.2.3. Fuel Selection

Fuels containing less carbon have lower potential CO_2 and CH_4 emissions. Choosing a less carbonaceous fuel will decrease CO_2 and CH_4 emissions as fewer carbon atoms are available.

---

[26] Although small fractions of fuel carbon convert to combustion byproducts such as CO and CH_4, the majority of carbon combusted in the fuel stream is converted to CO_2.

[27] 40 CFR § 52.21(b)(49)(i).

5.6.2.4. Good Combustion Practices

Good combustion and operating practices (GCPs) are a potential control option by improving the fuel efficiency of the generating units. GCPs also include proper maintenance and tune-up of the units as recommended by the manufacturer.

5.6.3. Step 2 - Elimination of Technically Infeasible Control Options

5.6.3.1. Carbon Capture and Sequestration (CCS)

CCS involves "capturing" and separating the CO_2 from the exhaust of the emission source, transporting the CO_2 to an appropriate injection site, and then storing CO_2 at a suitable sequestration site. The following sections describe the technical feasibility of each of the three steps necessary for the successful implementation of CCS. The CO_2 transfer options include both transfer to a pipeline or use in EOR.

CCS would involve post combustion capture of the CO_2 from the combustion turbines and sequestration of the CO_2 in some fashion; for example, in EOR. In theory, carbon capture could be accomplished with low pressure scrubbing of CO_2 from the exhaust stream with either solvents (e.g., amines and ammonia), solid sorbents, or membranes. [28]

The most commonly used solvent for CO_2 capture is monothanolamine (MEA). CO_2 from the flue gas is separated via absorption in an aqueous solution of MEA. CO_2 captured from this process can then be stored or used in EOR applications.

As part of the technical feasibility analysis, XTO reviewed developments in CCS technology and application for CCCTs around the world. Details are provided in this section.

Per the National Energy Technology Laboratory's (NETL) CCS Database, which includes a summary of world-wide development in the CCS technology as of April 2018, CO_2 capture using solvents, solid sorbents or membranes has been used on the coal-fired power plants and other industrial applications (e.g., food processing), which contain high concentrations of CO_2 in the flue gas (12 to 15 percent) compared to low-purity CO_2 resulting from the natural gas combined cycle (NGCC) units (approximately 3-4 percent). As presented in the NETL's database, none of the post-combustion CO_2 capture technologies have been demonstrated for full-scale, NGCC plants.[29]

The full-scale power plant CCS projects implemented are all coal-fired power plants.[30] While 2 full scale CCS projects for NGCC units were planned, one of these projects has been cancelled (Peterhead, Scottland, UK)[31] and the Masdar CCS Project in Abu Dhabi, United Arab Emirates is in the development phase. [32,33] Per the Masdar CCS Initiatives project website, the CO_2 would be captured for use in EOR operations.

---

[28] Post Combustion CO_2 Capture: https://www.netl.doe.gov/coal/carbon-capture/post-combustion
[29] NETL CCS Database available at: https://www.netl.doe.gov/coal/carbon-storage/worldwide-ccs-database
[30] https://sequestration.mit.edu/tools/projects/index_capture.html
[31] https://sequestration.mit.edu/tools/projects/peterhead.html
[32] https://sequestration.mit.edu/tools/projects/taweelah.html
[33] http://www.zeroco2.no/projects/masdar-initiative-ccs-projects

While CO_2 capture has been demonstrated on a pilot scale by NET Power in La Porte, Texas, the plant uses oxy-combustion process, where fuel is burned with oxygen to greatly reduce the volume of flue gas that must be processed. The project has been implemented for a 50 MW power plant and this technology has not been demonstrated for full scale NGCC plants.[34]

In addition, in a recent study conducted by the Prairie Research Institute, which was initiated in March 2017 and completed in May 2019, feasibility of CCS was evaluated for fossil fuel-base power generation (i.e., coal), ethanol production, chemical fertilizer plants, and refineries (CarbonSAFE Illinois East Sub-Basin project).[35] As included in this report, CCS was evaluated for industries that produce high purity CO_2 streams and none included CO_2 emissions from CCCTs.

In order to be considered available as BACT, a technology must be demonstrated, and "**technologies in the pilot scale testing stages of development would not be considered available for BACT review.**"[36] In this case, CCS is still in the pilot stage with significant public funding for potential applications and has not been demonstrated for full-scale NGCC units.

The 2011 EPA GHG PSD Guidance also reiterated the challenges associated with CCS:

> *EPA recognizes the significant logistical hurdles that the installation and operation of a CCS system presents and that sets it apart from other add-on controls that are typically used to reduce emissions of other regulated pollutants and already have an existing reasonably accessible infrastructure in place to address waste disposal and other offsite needs. Logistical hurdles for CCS may include obtaining contracts for offsite land acquisition (including the availability of land), the need for funding (including, for example, government subsidies), timing of available transportation infrastructure, and developing a site for secure long-term storage. . . . Based on these considerations, a permitting authority may conclude that CCS is not applicable to a particular source, and consequently not technically feasible, even if the type of equipment needed to accomplish the compression, capture, and storage of GHGs are determined to be generally available from commercial vendors.*[37]

Although CCS has many hurdles for implementation at any source, EPA has stated specific technical concerns when applying CCS to natural gas-fired sources. On October 23, 2015, EPA published an NSPS proposal for emissions of carbon dioxide for new fossil fuel–fired electric generating units ("EGU"). As part of the development of the EGU NSPS EPA conducted a best system of emission reduction ("BSER") analysis for natural gas combined cycle turbines ("NGCC") with CCS. EPA again came to the conclusion that CCS was not technically feasible for natural gas-fired turbines, as follows:

[34] https://sequestration.mit.edu/tools/projects/net_power.html
[35] https://www.osti.gov/servlets/purl/1523190
[36] EPA, New Source Review Workshop Manual, B.18 (Oct. 1990).
[37] USEPA, *PSD and Title V Permitting Guidance for Greenhouse Gases*, EPA-457/B-11-001, March 2011, page 36.

NGCC with CCS is not a configuration that is being built today. The EPA considered whether NGCC with CCS could be identified as the BSER adequately demonstrated for new stationary combustion turbines, and we decided that it could not. At this time, CCS has not been implemented for NGCC units, and we believe there is insufficient information to make a determination regarding the technical feasibility of implementing CCS at these types of units.[38]

EPA's NSPS proposal for NGCC eliminates CCS as a technically feasible control technology for NGCC turbines. This conclusion also supports a technically infeasible determination for CCS applicability to the natural gas turbines at the proposed gas plant.

In particular for the proposed gas plant, an integrated CCS application is technically infeasible due to the short-term and long-term uncertainty and risks surrounding the design, installation and operation of a CCS project; the dependence upon a third party commercial contract for CO_2 disposition, *i.e.*, enhanced oil recovery ("EOR"), for the life of the proposed power plant; and the absence of a regulatory infrastructure to oversee and regulate long-term CO_2 storage.

These risks are not unique to the proposed gas plant. The Interagency Task Force Report highlights the general short and long term CCS regulatory and market demand uncertainties:

- The existence of market failures, particularly the lack of a cohesive climate policy setting a price on carbon and encouraging emission reductions;
- The need for a legal and regulatory framework for CCS projects that facilitates project development, protects human health and the environment, and addresses public concerns whether CO_2 can be stored safely and securely;
- Improved industry confidence regarding the long-term liability for CO_2 storage, particularly regarding obligations for stewardship after closure and obligations to compensate parties for various types and forms of legally compensable losses or damages; and
- Integration of public information, education, and outreach throughout the CCS project lifecycle in order to foster public understanding and to build trust between communities and project developers.[39]

Large-scale (greater than 1 million metric tons CO_2 injected) projects using carbon sequestration are at the early stages of testing and development. It is still unclear, at this time, what the long-term outcome of these projects will be. The NETL, which is part of the Department of Energy (DOE)'s national laboratory system, is currently working on (and in some instances economically supporting) a number of large scale field tests in different geologic storage formations to confirm that CO_2 capture, transportation, injection, and storage can be achieved safely, permanently, and economically over extended periods of time.

Table 5-6 presents examples of current sequestration projects that are taking place in the United States and their respective states of development.

[38] Federal Register 1430 & 1436 / Vol. 79, No. 5, January 8, 2014 - *Standards of Performance for Greenhouse Gas Emissions from New Stationary Sources: Electric Utility Generating Units*.

[39] CCS Task Force Report, August 2010, page 53.

Table 5-6. Recent (2010 and Later) CCS Projects in the United States

Project Name	Project Location	Reservoir	Approximate Distance to Storage Location	Sequestration Amount (tons per year)	Current State of Development
Century Plant	Pecos County, TX	Oil Field (EOR)	40-150 miles	8.4 million	Phase 1 CO_2 capture began in 2010 Phase 2 CO_2 capture began in 2012
Air Products Steam Methane Reformer EOR Project	Port Arthur, Texas	Oil Field (EOR)	12 miles to existing CO_2 pipeline	1 million	CO_2 capture began in January 2013
Coffeyville Gasification Plant	Coffeyville, Kansas	Pennsylvanian Burbank Sandstone	70 miles	1 million	CO_2 capture began in 2013
Lost Cabin Gas Plant	Fremont County, Wyoming	Oil Field (EOR)	232 miles	0.9 million	CO_2 capture began in 2013
Illinois Industrial Carbon Capture and Storage Project	Decatur, Illinois	Mount Simon Sandstone	On-site	1 million	CO_2 capture began in April 2017[1]
Petra Nova Carbon Capture Project	Thompsons, Texas	Oil Field (EOR)	82 miles	1.4 million	CO_2 capture began in January 2017
Kemper County Energy Facility	Kemper County, Mississippi	Oil Field (EOR)	61 miles	3 million	CO_2 capture estimated to begin in 2017
Texas Clean Energy Project	Penwell, Texas	Oil Field (EOR)	Not specified, CO_2 enters the Kinder Morgan pipeline system	3 million	CO_2 capture estimated to begin in 2021
Riley Ridge Gas Plant	Big Piney, Wyoming	Oil Field (EOR)	N/A	2.5 million	CO_2 capture estimated to begin in 2020

[1] http://www.agweb.com/article/major-adm-carbon-capture-project-underway-naa-associated-press/

Although a number of large-scale sequestration projects have begun the first steps (i.e., injection of CO_2) for demonstration of CO_2 sequestration technology since 2010, it has not yet been proven that these injection sites provide a permanent location for CO_2 storage. Before concluding that these field tests accomplish their goal of permanently capturing and storing CO_2, periodic monitoring (including tracking the CO_2 plume to ensure it stays within the intended containment zone) must demonstrate successful long-term containment.

In summary, carbon capture technology has not developed to the level that it can be considered feasible full-scale CCCT units, such as the proposed turbine. As such, XTO determined that CCS is technically infeasible control technology option and eliminates CCS from further review under this BACT analysis.

5.6.3.2. Efficient Turbine Design

Using highly efficient combustion turbines is technically feasible for minimizing GHG emissions. The proposed combustion turbine is comparable or more efficient than other potential combustion turbine models. The design base load heat rate on a "new and clean" basis, without duct firing at steady state is 9,165 Btu/kWh (LHV, net) for the proposed turbine.

The combustion turbine generating unit proposed by XTO are highly efficient. This method of reducing emissions is already included in the defined project and it is not technically feasible to significantly improve efficiency.

5.6.3.3. Fuel Selection

Selecting a low-carbon fuel is a technically feasible method of controlling GHG emissions from a CCCT generating unit. XTO is proposing to burn natural gas in the units. Natural gas has a relatively low carbon content compared to other possible fuels. Other typical fuels for use in a CCCT generating unit include fuel oil and synthetic natural gas (SNG). The combustion of fuel oil creates nearly 40 percent more CO_2 than combustion of natural gas, as well as 3 times and 6 times as much CH_4 and N_2O, respectively.[40] SNG is relatively equivalent to natural gas in terms of GHG emissions; however, natural gas is much more readily available near the proposed project site making natural gas a more logistically feasible option. Natural gas is already the best choice in terms of possible fuels for reducing GHG emissions and natural gas is also part of the defined project. Decreasing GHG emissions beyond the proposed design by switching fuels is not technically feasible as natural gas is already the fuel of choice.

5.6.4. Step 3 - Ranking of Remaining Control Technologies

As discussed above, CCS is deemed technically infeasible for control of GHG emissions from the combustion turbines. All other control technologies discussed above are technically feasible.

5.6.5. Step 4 - Evaluation of Most Stringent Controls

After identifying and ranking available and technically feasible control technologies, the economic, environmental, and energy impacts are evaluated to select the best control option. For all identified technically feasible control technologies, XTO has not identified any adverse energy, environmental, or economic impacts.

5.6.6. Selection of BACT (Step 5)

XTO proposes the following design elements and work practices as BACT for the combustion turbine generating units:

- Selection of efficient generating units;
- Use of pipeline natural gas as fuel; and
- Implementation of good combustion, operating, and maintenance practices.

[40] Based on emission factors for natural gas and No. 2 fuel oil in Tables C-1 and C-2 of Subpart C of 40 CFR 98.

As noted in Section 13, the proposed combustion turbines will not be subject to NSPS Subpart TTTT, since the power will not be sold to a utility system. XTO proposes a BACT limit of 117 lb of CO_2/MMBtu, for the CCCT generating unit. The proposed emission limit represents maximum emissions across all load conditions and ambient temperatures. The compliance with the proposed emission limits will be demonstrated on 12-operating month annual average basis.

5.7. TURBINE BACT SUMMARY

Based on the BACT analysis presented in the preceding subsections, Table 5-7 summarizes the BACT determinations for the turbine.

Table 5-7 Turbine BACT Summary

>25 MW Natural Gas Fired Combined Cycle Turbine	NO_x	2 ppmv @ 15% O_2	Dry Low-NO_x combustion and SCR
	CO	2 ppmv @ 15% O_2	Catalytic oxidation and good combustion practices
	VOC	4.6 ppmv @ 15% O_2	Catalytic oxidation and good combustion practices
	$PM_{10}/PM_{2.5}$ (filterable)	0.00786 lb/MMBtu	Natural gas fuel and good combustion practices
	H_2SO_4	0.75 gr S/scf	Natural gas fuel and good combustion practices
	CO_2e	117 lb/MMBtu	Natural gas fuel, good combustion practices

XTO proposes to use eight (8) emergency engines (Units GEN1 through GEN8) to supply power during the loss of commercial power in emergency situations. These generators will use natural gas fuel and will be limited to less than 500 hours of operation per year. The BACT evaluation for combustion emissions from the proposed engines for NO_X, CO, VOC, $PM_{10}/PM_{2.5}$, and GHG (as CO_2e) are provided in this section. Appendix A provides a summary of RBLC and permit search results.

6.1. NO_X BACT

6.1.1. Background on Pollutant Formation

The formation of NO_X in engines and turbines follow the same mechanisms, and thermal NO_X is the dominant mechanism for both. Please refer to Section 5.1.1 for a detailed description of NO_X formation.

6.1.2. Identify All Available Control Technologies

NO_X reduction in natural gas-fired reciprocating internal combustion engines can be accomplished by combustion control techniques and post-combustion control methods. Combustion control techniques incorporate fuel or air staging that affect the kinetics of NO_X formation (i.e., reducing peak flame temperature) or introduce inerts (combustion products, for example) that limit initial NO_X formation, or both. Post-combustion NO_X control technologies employ various strategies to chemically reduce NO_X to elemental nitrogen (N_2).

Using the RBLC search and permit review results, as well as a review of technical literature, potentially applicable NO_X control technologies for natural gas-fired reciprocating internal combustion engines were identified based on the principles of control technology and engineering experience for general combustion units. Table 6-1 outlines the top down BACT analysis for NO_X emissions from the engines.

6.1.3. Selection of BACT for NO_X

The most stringent RBLC and permit entries for NO_X control are provided in Appendix A. XTO has determined that NO_X BACT for normal operation is a limit of 1.0 g/hp-hr utilizing clean burn technology and combustion design controls.

Table 6-1. BACT Analysis for Natural Gas-Fired Reciprocating Internal Combustion Engines - NO_X

Table 6-1 BACT Analysis for Natural Gas Fired Internal Combustion Engines – NO_X

		Control Technology	Selective Catalytic Reduction (SCR)[a]	Non-Selective Catalytic Reduction (NSCR)[b]	Clean Burn Technology	Combustion Design Controls
Step 1.	IDENTIFY AIR POLLUTION CONTROL TECHNOLOGIES	Control Technology Description	A nitrogen-based reagent (e.g., ammonia, urea) is injected into the exhaust stream downstream of the combustion unit. The reagent reacts selectively with NO_X to produce molecular N_2 and water in a reactor vessel containing a metallic or ceramic catalyst.	This technique uses residual hydrocarbons and CO in rich-burn engine exhaust as a reducing agent for NO_X. In an NSCR, hydrocarbons and CO are oxidized by O_2 and NO_X. The excess hydrocarbons, CO, and NO_X pass over a catalyst (usually a noble metal such as platinum, rhodium, or palladium) that oxidizes the excess hydrocarbons and CO to H_2O and CO_2, while reducing NO_X to N_2.	Natural gas fueled engines that operate with a fuel-lean air/fuel ratio are capable of low NO_X emissions.	NO_X emissions are caused by oxidation of nitrogen gas in the combustion air during fuel combustion. This occurs due to high combustion temperatures and insufficiently mixed air and fuel in the cylinder where pockets of excess oxygen occur. These effects can be minimized through air-to-fuel ratio control, ignition timing reduction, and exhaust gas recirculation.
		Typical Operating Temperature	480 - 800 °F (variations of ± 200 °F)	N/A	N/A	N/A
		Typical Waste Stream Inlet Flow Rate	N/A	N/A	N/A	N/A
		Typical Waste Stream Inlet Pollutant Concentration	As low as 20 ppm (efficiency improves with increased concentration up to 150 ppm)	N/A	N/A	N/A
		Other Considerations	Unreacted reagent may form ammonium sulfates which may plug or corrode downstream equipment. Particulate-laden streams may blind the catalyst and may necessitate the application of a sootblower.	N/A	N/A	N/A
Step 2.	ELIMINATE TECHNICALLY INFEASIBLE OPTIONS	RBLC Database Information	Not included in RBLC for the control of NO_X emissions from large natural gas-fired lean-burn stationary internal combustion emergency engines.	Not included in RBLC for the control of NO_X emissions from large natural gas-fired lean-burn stationary internal combustion emergency engines.	Included in RBLC for the control of NO_X emissions from large stationary internal combustion emergency engines.	Included in RBLC for the control of NO_X emissions from large stationary internal combustion emergency engines.
		Feasibility Discussion	Technically infeasible. For engines which typically operate at variable loads, such as engines on gas transmission pipelines, an SCR system may not function effectively, causing either periods of ammonia slip or insufficient ammonia to gain the reductions needed.	Technically infeasible. The NSCR technique is limited to engines with normal exhaust oxygen levels of 4 percent or less. This includes 4-stroke rich-burn naturally aspirated engines and some 4-stroke rich burn turbocharged engines. Lean-burn engines could not be retrofitted with NSCR control because of the reduced exhaust temperatures.	Technically feasible.	Technically feasible.
Step 3.	RANK REMAINING CONTROL TECHNOLOGIES	Overall Control Efficiency			Base Case	
Step 4.	EVALUATE AND DOCUMENT MOST EFFECTIVE CONTROLS	Cost Effectiveness ($/ton)				
Step 5.	SELECT BACT				1.0 g/hp-hr	

a. U.S. EPA, Office of Air Quality Planning and Standards, "Air Pollution Control Technology Fact Sheet (Selective Catalytic Reduction (SCR))," EPA-452/F-03-032.
b. U.S. EPA, AP-42, Section 3.2, "Natural Gas-Fired Reciprocating Engines".

6.2. CO BACT

6.2.1. Background on Pollutant Formation

CO from natural gas-fired reciprocating internal combustion engines is a by-product of incomplete combustion. Conditions leading to incomplete combustion include insufficient oxygen availability, poor fuel/air mixing, reduced combustion temperature, reduced combustion gas residence time, and load reduction.

6.2.2. Identify All Available Control Technologies

Using the RBLC search and permit review results, as well as a review of technical literature, potentially applicable CO control technologies for reciprocating internal combustion engines were identified based on the principles of control technology and engineering experience for general combustion units. Table 7-2 outlines the top-down BACT analysis for CO emissions from the engines.

6.2.3. Selection of BACT for CO

The most stringent RBLC and permit entries for CO control are provided in Appendix A. XTO has determined that CO BACT for normal operation is a limit of 1.5 g/hp-hr using good combustion practices.

Table 6-2. BACT Analysis for Natural Gas-Fired Reciprocating Internal Combustion Engines - CO

Table 6-2 BACT Analysis for Natural Gas Fired Internal Combustion Engines – CO

		Control Technology	Regenerative Thermal Oxidizer [a,b]	Recuperative Thermal Oxidizer [b,c]	Catalytic Oxidation[e]	Good Combustion Controls
Step 1.	IDENTIFY AIR POLLUTION CONTROL TECHNOLOGIES	Control Technology Description	Oxidizes combustible materials by raising the temperature of the material above the auto-ignition point in the presence of oxygen and maintaining the high temperature for sufficient time to complete combustion. Regenerative oxidizers usually use multiple energy recovery chambers and ceramic media to store the heat used to pre-heat the inlet stream.	Oxidizes combustible materials by raising the temperature of the material above the auto-ignition point in the presence of oxygen and maintaining the high temperature for sufficient time to complete combustion. Recuperative oxidizers utilize the process exhaust vent stream to preheat the inlet stream entering the oxidizer.	Similar to thermal oxidation; waste stream is heated by a flame and then passes through a catalyst bed that increases the oxidation rate more quickly and at lower temperatures.	Operation of the RICE at the appropriate oxygen range and temperature to promote complete combustion and minimize CO formation.
		Typical Operating Temperature	1,400 - 1,500 °F	1,100 - 1,200 °F	600 - 800 °F (not to exceed 1,250 °F)	N/A
		Typical Waste Stream Inlet Flow Rate	5,000 - 500,000 scfm	500 - 50,000 scfm	700 - 50,000 scfm	N/A
		Typical Waste Stream Inlet Pollutant Concentration	As low as 100 ppmv or less	As low as 100 ppmv or less	As low as 1 ppmv	N/A
		Other Considerations	Additional fuel is required to reach the ignition temperature of the waste gas stream. Oxidizers are not recommended for controlling gases with sulfur containing compounds because of the formation of highly corrosive acid gases.	Additional fuel is required to reach the ignition temperature of the waste gas stream. Oxidizers are not recommended for controlling gases with sulfur containing compounds because of the formation of highly corrosive acid gases.	Oxidation efficiency depends on exhaust flow rate and composition. Residence time required for oxidation to take place at the active sites of the catalyst may not be achieved if exhaust flow rates exceed design specifications. Also, sulfur and other compounds may foul the catalyst, leading to decreased efficiency.	N/A
Step 2.	ELIMINATE TECHNICALLY INFEASIBLE OPTIONS	RBLC Database Information	Not included in RBLC for the control of CO emissions from large natural gas-fired lean-burn stationary internal combustion emergency engines.	Not included in RBLC for the control of CO emissions from large natural gas-fired lean-burn stationary internal combustion emergency engines.	Included in RBLC for the control of CO emissions from large natural gas-fired lean-burn stationary internal combustion emergency engines.	Included in RBLC for the control of CO emissions from internal combustion emergency engines.
		Feasibility Discussion	Technically infeasible. Thermal oxidizers do not reduce emissions of CO from properly operated natural gas combustion units without the use of a catalyst.	Technically infeasible. Thermal oxidizers do not reduce emissions of CO from properly operated natural gas combustion units without the use of a catalyst.	Technically feasible. However, engines already meet NSPS JJJJ emission limits based on manufacture specifications. Based on limited hours of operation and emergency use, use of catalytic oxidation does not provide enough of a emissions reduction to be feasible for emergency units. NSPS JJJJ Limits for Emergency Engines > 130 hp (g/hp-hr): NO_X: 2.0; CO: 4.0; VOC: 1.0 Emergency Generator MFG Emissions (g/hp-hr) NOX: 1.0; CO: 1.5; VOC 0.21	Feasible
Step 3.	RANK REMAINING CONTROL TECHNOLOGIES	Overall Control Efficiency			70-90%	Base Case
Step 4.	EVALUATE AND DOCUMENT MOST EFFECTIVE CONTROLS	Cost Effectiveness ($/ton)				
Step 5.	SELECT BACT					1.5 g/hp-hr

a. U.S. EPA, Office of Air Quality Planning and Standards, "Air Pollution Control Technology Fact Sheet (Thermal Incinerator)," EPA-452/F-03-022.
b. U.S. EPA, Office of Air Quality Planning and Standards, "Air Pollution Control Technology Fact Sheet (Regenerative Incinerator)," EPA-452/F-03-021.
c. U.S. EPA, Office of Air Quality Planning and Standards, "Air Pollution Control Technology Fact Sheet (Recuperative Incinerator)," EPA-452/F-03-020.
d. California EPA, Air Resources Board, "Report to the Legislature: Gas-Fired Power Plant NO_X Emission Controls and Related Environmental Impacts," http://www.arb.ca.gov/research/apr/reports/l2069.pdf
e. U.S. EPA, Office of Air Quality Planning and Standards, "Air Pollution Control Technology Fact Sheet (Catalytic Incinerator)," EPA-452/F-03-018.

6.3. VOC BACT

6.3.1. Background on Pollutant Formation

The formation of VOC is the result of incomplete combustion. VOC results when there is insufficient residence time at high temperature to complete the final step in hydrocarbon oxidation.

6.3.2. Identify All Available Control Technologies

Using the RBLC search and permit review results, as well as a review of technical literature, potentially applicable VOC control technologies for natural gas-fired reciprocating internal combustion engines were identified based on the principles of control technology and engineering experience for general combustion units. Table 6-3 outlines the top-down BACT analysis for VOC emissions from the engines. Generally, the control technologies for VOC are identical to those for CO.

6.3.3. Selection of BACT for VOC

The most stringent RBLC and permit entries for VOC control are provided in Appendix A. XTO has determined that VOC BACT for normal operation is a limit of 0.21 g/hp-hr using good combustion practices.

Table 6-3. BACT Analysis for Natural Gas-Fired Reciprocating Internal Combustion Engines - VOC

Table 6-3 BACT Analysis for Natural Gas Fired Internal Combustion Engines – VOC

		Control Technology	Regenerative Thermal Oxidizer [a,b]	Recuperative Thermal Oxidizer [b,c]	Catalytic Oxidation[d]	Good Combustion Controls
Step 1.	IDENTIFY AIR POLLUTION CONTROL TECHNOLOGIES	Control Technology Description	Oxidizes combustible materials by raising the temperature of the material above the auto-ignition point in the presence of oxygen and maintaining the high temperature for sufficient time to complete combustion. Regenerative oxidizers usually use multiple energy recovery chambers and ceramic media to store the heat used to pre-heat the inlet stream.	Oxidizes combustible materials by raising the temperature of the material above the auto-ignition point in the presence of oxygen and maintaining the high temperature for sufficient time to complete combustion. Recuperative oxidizers utilize the process exhaust vent stream to preheat the inlet stream entering the oxidizer.	Similar to thermal oxidation; waste stream is heated by a flame and then passes through a catalyst bed that increases the oxidation rate more quickly and at lower temperatures.	Operation of the RICE at the appropriate oxygen range and temperature to promote complete combustion and minimize VOC formation.
		Typical Operating Temperature	1,400 - 1,500 °F	1,100 - 1,200 °F	600 - 800 °F (not to exceed 1,250 °F)	N/A
		Typical Waste Stream Inlet Flow Rate	5,000 - 500,000 scfm	500 - 50,000 scfm	700 - 50,000 scfm	N/A
		Typical Waste Stream Inlet Pollutant Concentration	As low as 100 ppmv or less	As low as 100 ppmv or less	As low as 1 ppmv	N/A
		Other Considerations	Additional fuel is required to reach the ignition temperature of the waste gas stream. Oxidizers are not recommended for controlling gases with sulfur containing compounds because of the formation of highly corrosive acid gases.	Additional fuel is required to reach the ignition temperature of the waste gas stream. Oxidizers are not recommended for controlling gases with sulfur containing compounds because of the formation of highly corrosive acid gases.	Oxidation efficiency depends on exhaust flow rate and composition. Residence time required for oxidation to take place at the active sites of the catalyst may not be achieved if exhaust flow rates exceed design specifications. Also, sulfur and other compounds may foul the catalyst, leading to decreased efficiency.	N/A
Step 2.	ELIMINATE TECHNICALLY INFEASIBLE OPTIONS	RBLC Database Information	Not included in RBLC for the control of VOC emissions for natural gas-fired stationary internal combustion emergency engines.	Not included in RBLC for the control of VOC emissions for natural gas-fired stationary internal combustion emergency engines.	Included in RBLC for the control of VOC emissions for natural gas-fired stationary internal combustion emergency engines.	Included in RBLC for the control of VOC emissions from natural gas-fired stationary internal combustion emergency engines.
		Feasibility Discussion	Technically infeasible. Thermal oxidizers do not reduce emissions of VOC from properly operated natural gas combustion units without the use of a catalyst.	Technically infeasible. Thermal oxidizers do not reduce emissions of VOC from properly operated natural gas combustion units without the use of a catalyst.	Technically feasible. However, engines already meet NSPS JJJJ emission limits based on manufacture specifications. Based on limited hours of operation and emergency use, use of catalytic oxidation does not provide enough of a emissions reduction to be feasible for emergency units. NSPS JJJJ Limits for Emergency Engines > 130 hp (g/hp-hr): NO_X: 2.0; CO: 4.0; VOC: 1.0 Emergency Generator MFG Emissions (g/hp-hr) NOX: 1.0; CO: 1.5; VOC 0.21	Feasible
Step 3.	RANK REMAINING CONTROL TECHNOLOGIES	Overall Control Efficiency			20-40%	Base Case
Step 4.	EVALUATE AND DOCUMENT MOST EFFECTIVE CONTROLS	Cost Effectiveness ($/ton)				
Step 5.	SELECT BACT					0.21 g/hp-hr

a. U.S. EPA, Office of Air Quality Planning and Standards, "Air Pollution Control Technology Fact Sheet (Thermal Incinerator)," EPA-452/F-03-022.
b. U.S. EPA, Office of Air Quality Planning and Standards, "Air Pollution Control Technology Fact Sheet (Regenerative Incinerator)," EPA-452/F-03-021.
c. U.S. EPA, Office of Air Quality Planning and Standards, "Air Pollution Control Technology Fact Sheet (Recuperative Incinerator)," EPA-452/F-03-020.
d. U.S. EPA, Office of Air Quality Planning and Standards, "Air Pollution Control Technology Fact Sheet (Catalytic Incinerator)," EPA-452/F-03-018.

6.4. $PM_{10}/PM_{2.5}$ BACT

6.4.1. Background on Pollutant Formation

Filterable PM emissions from combustion are formed by ash and sulfur in the fuel. Combustion of natural gas generates low filterable PM emissions in comparison to other fuels due to its low ash and sulfur contents.

6.4.2. Identify All Available Control Technologies

Using the RBLC search and permit review results, as well as a review of technical literature, potentially applicable particulate control technologies were identified based on the principles of control technology and engineering experience for general combustion units. Table 6-4 outlines the top-down BACT analysis for particulate emissions from the engines.

6.4.3. Selection of BACT for $PM_{10}/PM_{2.5}$

Based on the review of the RBLC search and other permit review results, XTO has determined that the $PM_{10}/PM_{2.5}$ BACT limit is 7.71E-05 lb/MMBtu (filterable) by implementing good combustion practices and use of pipeline quality natural gas (fuel specifications).

Table 6-4. BACT Analysis for Natural Gas-Fired Reciprocating Internal Combustion Engines – $PM_{10}/PM_{2.5}$

Table 6-4 BACT Analysis for Natural Gas Fired Internal Combustion Engines – PM_{10} and $PM_{2.5}$

		Control Technology	Baghouse / Fabric Filter[a]	Electrostatic Precipitator (ESP)[b,c,d]	Cyclone[e]	Fuel Specifications	Good Combustion Practices
Step 1.	IDENTIFY AIR POLLUTION CONTROL TECHNOLOGIES	Control Technology Description	Process exhaust gas passes through a tightly woven or felted fabric arranged in sheets, cartridges, or bags that collect PM via sieving and other mechanisms. The dust cake that accumulates on the filters increases collection efficiency. Various cleaning techniques include pulse-jet, reverse-air, and shaker technologies.	Electrodes stimulate the waste gas and induce an electrical charge in the entrained particles. The resulting electrical field forces the charged particles to the collector walls from which the material may be mechanically dislodged and collected in dry systems or washed with a water deluge in wet systems.	Centrifugal forces drive particles in the gas stream toward the cyclone walls as the waste gas flows through the conical unit. The captured particles are collected in a material hopper below the unit.	Combusting only natural gas, which has an inherently low sulfur content, rather than higher sulfur content fuels alone or in combination with natural gas.	Operate and maintain the equipment in accordance with good air pollution control practices and with good combustion practices.
		Typical Operating Temperature	Up to 500 °F (Typical)	Up to 1,300 °F (dry) Lower than 170 - 190 °F (wet)	Up to 1,000 °F	N/A	N/A
		Typical Waste Stream Inlet Flow Rate	100 - 100,000 scfm (Standard) 100,000 - 1,000,000 scfm (Custom)	1,000 - 100,000 scfm (Wire-Pipe) 100,000 - 1,000,000 scfm (Wire-Plate)	1.1 - 63,500 scfm (single) Up to 106,000 scfm (in parallel)	N/A	N/A
		Typical Waste Stream Inlet Pollutant Concentration	0.5 - 10 gr/dscf (Typical) 0.05 - 100 gr/dscf (Achievable)	0.5 - 5 gr/dscf (Wire-Pipe) 1 - 50 gr/dscf (Wire-Plate)	0.44 - 7,000 gr/dscf	N/A	N/A
		Other Considerations	Fabric filters are susceptible to corrosion and blinding by moisture. Appropriate fabrics must be selected for specific process conditions. Accumulations of dust may present fire or explosion hazards.	Dry ESP efficiency varies significantly with dust resistivity. Air leakage and acid condensation may cause corrosion. ESPs are not generally suitable for highly variable processes. Equipment footprint is often substantial.	Cyclones typically exhibit lower efficiencies when collecting smaller particles. High-efficiency units may require substantial pressure drop.	N/A	N/A
Step 2.	ELIMINATE TECHNICALLY INFEASIBLE OPTIONS	RBLC Database Information	Not included in RBLC for the control of PM emissions for natural gas-fired stationary internal combustion emergency engines.	Not included in RBLC for the control of PM emissions for natural gas-fired stationary internal combustion emergency engines.	Not included in RBLC for the control of PM emissions for natural gas-fired stationary internal combustion emergency engines.	Included in RBLC for the control of PM emissions from large natural gas-fired lean-burn stationary internal combustion emergency engines.	Included in RBLC for the control of PM emissions from large natural gas-fired lean-burn stationary internal combustion emergency engines.
		Feasibility Discussion	Technically Infeasible. Natural-gas fired internal combustion engines generate low PM emissions and have large exhaust flowrates, resulting in very low concentrations of PM. Add-on control devices would not provide any measurable emission reduction.	Technically Infeasible. Natural-gas fired internal combustion engines generate low PM emissions and have large exhaust flowrates, resulting in very low concentrations of PM. Add-on control devices would not provide any measurable emission reduction.	Technically Infeasible. Natural-gas fired internal combustion engines generate low PM emissions and have large exhaust flowrates, resulting in very low concentrations of PM. Add-on control devices would not provide any measurable emission reduction.	Feasible	Feasible
Step 3.	RANK REMAINING CONTROL TECHNOLOGIES	Overall Control Efficiency				Base Case	Base Case
Step 4.	EVALUATE AND DOCUMENT MOST EFFECTIVE CONTROLS	Cost Effectiveness ($/ton)					
Step 5.	SELECT BACT					7.71E-05 lb/MMBtu	

a. U.S. EPA, Office of Air Quality Planning and Standards, "Air Pollution Control Technology Fact Sheet (Fabric Filter - Pulse-Jet Cleaned Type)," EPA-452/F-03-025.
b. U.S. EPA, Office of Air Quality Planning and Standards, "Air Pollution Control Technology Fact Sheet (Dry Electrostatic Precipitator (ESP) - Wire-Pipe Type)," EPA-452/F-03-027.
c. U.S. EPA, Office of Air Quality Planning and Standards, "Air Pollution Control Technology Fact Sheet (Dry Electrostatic Precipitator (ESP) - Wire-Plate Type)," EPA-452/F-03-028.
d. U.S. EPA, Office of Air Quality Planning and Standards, "Air Pollution Control Technology Fact Sheet (Wet Electrostatic Precipitator(ESP) - Wire-Pipe Type)," EPA-452/F-03-029.
e. U.S. EPA, Office of Air Quality Planning and Standards, "Air Pollution Control Technology Fact Sheet (Cyclone)," EPA-452/F-03-005.

6.5. GHG BACT

6.5.1. Background on Pollutant formation

Emissions result from combustion of natural gas in the engines.

6.5.2. Step 1 - Identify All Available Control Technologies

The available GHG emission control strategies for the emergency engine combustion emissions include:

- Carbon Capture and Sequestration
- Efficient Engine Design
- Low Carbon Fuel Selection
- Good Combustion, Operating, and Maintenance Practices

6.5.2.1. *Carbon Capture and Sequestration*

A detailed discussion of CCS technology is provided in previous sections. Due to limited hours of operation and low CO_2 emissions from engines, CCS has not been implemented for emergency engines.

6.5.2.2. *Efficient Engine Design*

Good engine design can be employed to optimize combustion efficiency and meet the emergency requirements for the proposed plant.

6.5.2.3. *Low Carbon Fuel Selection*

The fuel for firing the proposed engines will be limited to natural gas fuel. Natural gas has the lowest carbon intensity of any available fuel for the engines.

6.5.2.4. *Good Combustion, Operating, and Maintenance Practices*

Good combustion and operating practices are a potential control option for maintaining the combustion efficiency of the emergency equipment. Good combustion practices include proper maintenance and tune-up of the engines per the manufacturer's specifications.

6.5.3. Step 2 - Eliminate Technically Infeasible Options

CCS is not considered an available control option for emergency equipment that operates on an intermittent basis and must be immediately available during plant emergencies without the constraint of starting up the CCS process. Therefore, CCS is not technically feasible for the emergency equipment. Therefore, it has been eliminated from further consideration in the remaining steps of the analysis.

All other control technologies are considered feasible.

6.5.4. Step 3 - Rank Remaining Control Technologies by Control Effectiveness

XTO will select all feasible control technologies to minimize GHG emissions from the engines.

6.5.5. Step 4 - Evaluate Most Effective Control Options

No significant adverse energy or environmental impacts (that would influence the GHG BACT selection process) associated with the above-mentioned technically feasible control options are expected.

6.5.6. Step 5 - Select BACT for the Emergency Engines

XTO proposes a BACT limit of 379 g/hp-hr of CO_2 for the emergency engines. This limit will be achieved through the selection of fuel-efficient engines, use of natural gas fuel, and implementation of good combustion practices, including proper maintenance and operation.

The BACT evaluation for combustion emissions from the proposed heaters rated < 100 MMBtu/hr (Units SHTR1 through SHTR12, CHTR1 through CHTR3, and RHTR1 through RHTR3) for NO_X, CO, VOC, $PM_{10}/PM_{2.5}$, and GHG (as CO_2e) are provided in Sections 7.1 through 7.5. Appendix A provides a summary of RBLC and permit search results.

7.1. NO_X BACT

7.1.1. Background on Pollutant Formation

The formation of NO_X in heaters and turbines follow the same mechanisms, and thermal NO_X is the dominant mechanism. Please refer to Section 5.1.1 for a detailed description of NO_X formation.

7.1.2. Identify All Available Control Technologies

Using the RBLC search and permit review results, as well as a review of technical literature, potentially applicable NO_X control technologies for heaters rated < 100 MMBtu/hr were identified. The cryo heaters are rated at 103.99 MMBtu/hr; and a RBLC search was completed for heaters between 100 MMBtu/hr and 250 MMBtu/hr. No significant differences in control technologies or BACT limits were found for the 103.99 MMBtu/hr heaters. Table 7-1 outlines the top-down BACT analysis for NO_X emissions from the heaters.

7.1.3. Selection of BACT for NO_x

The most stringent RBLC and permit entries for NO_X control are provided in Appendix A. XTO has determined that the NO_X BACT is utilizing low NO_x burners and good combustion controls with limits of 0.0267 lb/MMBtu for heaters less than 90 MMBtu/hr and 0.034 lb/MMBtu for heaters greater than 90 MMBtu/hr.

Table 7-1. BACT Analysis for Natural Gas-Fired Heaters – NO_X

Table 7-1 BACT Analysis for Natural Gas-Fired Heaters (< 100 MMBtu/hr) – NO_X

Step 1.	**IDENTIFY AIR POLLUTION CONTROL TECHNOLOGIES**	**Control Technology**	**Selective Catalytic Reduction (SCR)[a]**	**Selective Non-Catalytic Reduction (SNCR)[b]**	**Low NO_X Burners[c]**	**Good Combustion Practices and Fuel Selection**
		Control Technology Description	A nitrogen-based reagent (e.g., ammonia, urea) is injected into the exhaust stream downstream of the combustion unit. The reagent reacts selectively with NO_X to produce molecular N_2 and water in a reactor vessel containing a metallic or ceramic catalyst.	A nitrogen-based reagent (e.g., ammonia, urea) is injected into the exhaust stream downstream of the combustion unit. The reagent reacts with NO_X to produce molecular N_2 and water. However, unlike SCR, this reaction is non-catalyzed as the NO_X reduction reaction is favored for a specific temperature range in the presence of oxygen.	NOx control from these special burners is based on combustion modification techniques. Precise mixing of fuel and air is used to keep the flame temperature low and to dissipate heat quickly through the use of low excess air, off stoichiometric combustion and combustion gas recirculation	Operation at the appropriate oxygen range and temperature to promote complete combustion and minimize NO_X formation.
		Typical Operating Temperature	480 - 800 °F (variations of ± 200 °F)	1600 - 2400 °F	N/A	N/A
		Typical Waste Stream Inlet Flow Rate	N/A	N/A	N/A	N/A
		Typical Waste Stream Inlet Pollutant Concentration	As low as 20 ppm (efficiency improves with increased concentration up to 150 ppm)	Concentrations above 200 ppm	N/A	N/A
		Other Considerations	Unreacted reagent may form ammonium sulfates which may plug or corrode downstream equipment. Particulate-laden streams may blind the catalyst and may necessitate the application of a soot blower.	N/A	N/A	N/A
Step 2.	**ELIMINATE TECHNICALLY INFEASIBLE OPTIONS**	**RBLC Database Information**	Not included in RBLC for the control of NO_X emissions from natural gas fired-heaters (< 100 MMBtu/hr)	Not included in RBLC for the control of NO_X emissions from natural gas fired-heaters (< 100 MMBtu/hr)	Included in RBLC for the control of NO_X emissions from natural gas fired-heaters (< 100 MMBtu/hr) (0.036 lb/MMbtu - 0.045 lb/MMBtu)	Included in RBLC for the control of NO_X emissions from natural gas fired-heaters (< 100 MMBtu/hr)
		Feasibility Discussion	Technically infeasible. Not implemented on heaters of this size.	Technically infeasible. Not implemented on heaters of this size.	Technically feasible.	Technically feasible.
Step 3.	**RANK REMAINING CONTROL TECHNOLOGIES**	**Overall Control Efficiency**			80%	Base Case
Step 4.	**EVALUATE AND DOCUMENT MOST EFFECTIVE CONTROLS**	**Cost Effectiveness ($/ton)**				
Step 5.	**SELECT BACT**				**0.0267 lb/MMBtu** (for the 64.83 MMBtu/hr and 39.14 MMBtu/hr units) **0.034 lb/MMBtu** (for the 103.99 MMBtu/hr unit)	

a. U.S. EPA, Office of Air Quality Planning and Standards, "Air Pollution Control Technology Fact Sheet (Selective Catalytic Reduction (SCR))," EPA-452/F-03-032.
b. U.S. EPA, Office of Air Quality Planning and Standards, "EPA Air Pollution Control Cost Manual - Section 4 - NO_X Controls: Chapter 1 - Selective Non-Catalytic Reduction (Revised)".
c. U.S. EPA, Office of Air Quality Planning and Standards, "Technical Bulletin Nitrogen Oxides (NOx), Why and How They are Controlled" EPA 456/F-99-006R.

7.2. CO BACT

7.2.1. Background on Pollutant Formation

CO from combustion sources is a by-product of incomplete combustion. Conditions leading to incomplete combustion include insufficient oxygen availability, poor fuel/air mixing, reduced combustion temperature, reduced combustion gas residence time, and load reduction.

7.2.2. Identify All Available Control Technologies

Using the RBLC search and permit review results, as well as a review of technical literature, potentially applicable CO control technologies for the heaters were identified. Table 7-2 outlines the top-down BACT analysis for CO emissions from the heaters.

7.2.3. Selection of BACT for CO

Based on the review of the RBLC search and other permit review results, XTO has determined that the CO BACT is 0.0163 lb/MMBtu by utilizing good combustion practices and fuel selection.

Table 7-2. BACT Analysis for Natural Gas-Fired Heaters – CO

Table 7-2 BACT Analysis for Natural Gas-Fired Heaters (< 100 MMBtu/hr) – CO

Step 1.	**IDENTIFY AIR POLLUTION CONTROL TECHNOLOGIES**	**Control Technology**	**Catalytic Oxidation[a]**	**Good Combustion Practices and Fuel Selection**
		Control Technology Description	Waste stream is heated by a flame and then passes through a catalyst bed that increases the oxidation rate more quickly and at lower temperatures.	Operation at the appropriate oxygen range and temperature to promote complete combustion and minimize CO formation.
		Typical Operating Temperature	600 - 800 °F (not to exceed 1,250 °F)	N/A
		Typical Waste Stream Inlet Flow Rate	700 - 50,000 scfm	N/A
		Typical Waste Stream Inlet Pollutant Concentration	As low as 1 ppmv	N/A
		Other Considerations	Oxidation efficiency depends on exhaust flow rate and composition. Residence time required for oxidation to take place at the active sites of the catalyst may not be achieved if exhaust flow rates exceed design specifications. Also, sulfur and other compounds may foul the catalyst, leading to decreased efficiency.	N/A
Step 2.	**ELIMINATE TECHNICALLY INFEASIBLE OPTIONS**	**RBLC Database Information**	Not listed in RBLC. Not implemented on heaters of this size.	Included in RBLC for the control of CO emissions from natural gas fired-heaters (< 100 MMBtu/hr).
		Feasibility Discussion	Technically infeasible. Not implemented on heaters of this size.	Feasible
Step 3.	**RANK REMAINING CONTROL TECHNOLOGIES**	**Overall Control Efficiency**		Base Case
Step 4.	**EVALUATE AND DOCUMENT MOST EFFECTIVE CONTROLS**	**Cost Effectiveness ($/ton)**		
Step 5.	**SELECT BACT**			0.0163 lb/MMBtu

a. U.S. EPA, Office of Air Quality Planning and Standards, "Air Pollution Control Technology Fact Sheet (Catalytic Incinerator)," EPA-452/F-03-018.

7.3. VOC BACT

7.3.1. Background on Pollutant Formation

The formation of VOC is the result of incompletion combustion from natural gas. VOC results when there is insufficient residence time at high temperature to complete the final step in hydrocarbon oxidation.

7.3.2. Identify All Available Control Technologies

Using the RBLC search and permit review results, as well as a review of technical literature, potentially applicable VOC control technologies for the heaters were identified. Table 7-3 outlines the top-down BACT analysis for VOC emissions from the heaters.

7.3.3. Selection of BACT for VOC

Based on the review of the RBLC search and other permit review results, XTO has determined that the VOC BACT is 0.0064 lb/MMBtu by utilizing good combustion practices and fuel selection.

Table 7-3. BACT Analysis for Natural Gas-Fired Heaters – VOC

Table 7-3 BACT Analysis for Natural Gas-Fired Heaters (< 100 MMBtu/hr) – VOC

Step 1.	**IDENTIFY AIR POLLUTION CONTROL TECHNOLOGIES**	**Control Technology**	**Catalytic Oxidation[a]**	**Good Combustion Practices and Fuel Selection**
		Control Technology Description	Waste stream is heated by a flame and then passes through a catalyst bed that increases the oxidation rate more quickly and at lower temperatures.	Operation at the appropriate oxygen range and temperature to promote complete combustion and minimize VOC formation.
		Typical Operating Temperature	600 - 800 °F (not to exceed 1,250 °F)	N/A
		Typical Waste Stream Inlet Flow Rate	700 - 50,000 scfm	N/A
		Typical Waste Stream Inlet Pollutant Concentration	As low as 1 ppmv	N/A
		Other Considerations	Oxidation efficiency depends on exhaust flow rate and composition. Residence time required for oxidation to take place at the active sites of the catalyst may not be achieved if exhaust flow rates exceed design specifications. Also, sulfur and other compounds may foul the catalyst, leading to decreased efficiency.	N/A
Step 2.	**ELIMINATE TECHNICALLY INFEASIBLE OPTIONS**	**RBLC Database Information**	Not listed in RBLC. Not implemented on heaters of this size.	Included in RBLC for the control of VOC emissions from natural gas fired-heaters (< 100 MMBtu/hr).
		Feasibility Discussion	Not implemented on heaters of this size.	Feasible
Step 3.	**RANK REMAINING CONTROL TECHNOLOGIES**	**Overall Control Efficiency**		Base Case
Step 4.	**EVALUATE AND DOCUMENT MOST EFFECTIVE CONTROLS**	**Cost Effectiveness ($/ton)**		
Step 5.	**SELECT BACT**			0.0064 lb/MMBtu

a. U.S. EPA, Office of Air Quality Planning and Standards, "Air Pollution Control Technology Fact Sheet (Catalytic Incinerator)," EPA-452/F-03-018.

7.4. $PM_{10}/PM_{2.5}$ BACT

7.4.1. Background on Pollutant Formation

Filterable PM emissions from combustion are formed by ash and sulfur in the fuel. Combustion of natural gas generates low filterable PM emissions in comparison to other fuels due to its low ash and sulfur contents.

7.4.2. Identify All Available Control Technologies

Using the RBLC search and permit review results, as well as a review of technical literature, potentially applicable $PM_{2.5}/PM_{10}$ control technologies for the heaters were identified. Table 7-4 outlines the top-down BACT analysis for $PM_{2.5}/PM_{10}$ emissions from the heaters.

7.4.3. Selection of BACT for $PM_{10}/PM_{2.5}$

Based on the review of the RBLC search and other permit review results, XTO has determined that the $PM_{10}/PM_{2.5}$ BACT is 0.0134 lb/MMBtu (filterable) by utilizing good combustion practices and use of pipeline quality natural gas.

Table 7-4. BACT Analysis for Natural Gas-Fired Heaters – $PM_{10}/PM_{2.5}$

Table 7-4 BACT Analysis for Natural Gas-Fired Heaters (< 100 MMBtu/hr) – PM_{10} and $PM_{2.5}$

		Control Technology	Baghouse / Fabric Filter[a]	Electrostatic Precipitator (ESP)[b,c,d]	Cyclone[e]	Good Combustion Practices	Fuel Selection
Step 1.	IDENTIFY AIR POLLUTION CONTROL TECHNOLOGIES	Control Technology Description	Process exhaust gas passes through a tightly woven or felted fabric arranged in sheets, cartridges, or bags that collect PM via sieving and other mechanisms. The dust cake that accumulates on the filters increases collection efficiency. Various cleaning techniques include pulse-jet, reverse-air, and shaker technologies.	Electrodes stimulate the waste gas and induce an electrical charge in the entrained particles. The resulting electrical field forces the charged particles to the collector walls from which the material may be mechanically dislodged and collected in dry systems or washed with a water deluge in wet systems.	Centrifugal forces drive particles in the gas stream toward the cyclone walls as the waste gas flows through the conical unit. The captured particles are collected in a material hopper below the unit.	Operate and maintain the equipment in accordance with good air pollution control practices and with good combustion practices.	Use of pipeline quality natural gas results in lower emissions.
		Typical Operating Temperature	Up to 500 °F (Typical)	Up to 1,300 °F (dry) Lower than 170 - 190 °F (wet)	Up to 1,000 °F	N/A	N/A
		Typical Waste Stream Inlet Flow Rate	100 - 100,000 scfm (Standard) 100,000 - 1,000,000 scfm (Custom)	1,000 - 100,000 scfm (Wire-Pipe) 100,000 - 1,000,000 scfm (Wire-Plate)	1.1 - 63,500 scfm (single) Up to 106,000 scfm (in parallel)	N/A	N/A
		Typical Waste Stream Inlet Pollutant Concentration	0.5 - 10 gr/dscf (Typical) 0.05 - 100 gr/dscf (Achievable)	0.5 - 5 gr/dscf (Wire-Pipe) 1 - 50 gr/dscf (Wire-Plate)	0.44 - 7,000 gr/dscf	N/A	N/A
		Other Considerations	Fabric filters are susceptible to corrosion and blinding by moisture. Appropriate fabrics must be selected for specific process conditions. Accumulations of dust may present fire or explosion hazards.	Dry ESP efficiency varies significantly with dust resistivity. Air leakage and acid condensation may cause corrosion. ESPs are not generally suitable for highly variable processes. Equipment footprint is often substantial.	Cyclones typically exhibit lower efficiencies when collecting smaller particles. High-efficiency units may require substantial pressure drop.	N/A	N/A
Step 2.	ELIMINATE TECHNICALLY INFEASIBLE OPTIONS	RBLC Database Information	Not included in RBLC for control of PM emissions from natural gas fired-heaters (< 100 MMBtu/hr).	Not included in RBLC for control of PM emissions from natural gas fired-heaters (< 100 MMBtu/hr).	Not included in RBLC for control of PM emissions from natural gas fired-heaters (< 100 MMBtu/hr).	Included in RBLC for the control of PM emissions from natural gas fired-heaters (< 100 MMBtu/hr).	Included in RBLC for the control of PM emissions from natural gas fired-heaters (< 100 MMBtu/hr).
		Feasibility Discussion	Technically Infeasible. Not implemented on natural gas-fired heaters of this size.	Technically Infeasible. Not implemented on natural gas-fired heaters of this size.	Technically Infeasible. Not implemented on natural gas-fired heaters of this size.	Feasible	Feasible
Step 3.	RANK REMAINING CONTROL TECHNOLOGIES	Overall Control Efficiency				Base Case	Base Case
Step 4.	EVALUATE AND DOCUMENT MOST EFFECTIVE CONTROLS	Cost Effectiveness ($/ton)					
Step 5.	SELECT BACT					0.0134 lb/MMBtu	

a. U.S. EPA, Office of Air Quality Planning and Standards, "Air Pollution Control Technology Fact Sheet (Fabric Filter - Pulse-Jet Cleaned Type)," EPA-452/F-03-025.
b. U.S. EPA, Office of Air Quality Planning and Standards, "Air Pollution Control Technology Fact Sheet (Dry Electrostatic Precipitator (ESP) - Wire-Pipe Type)," EPA-452/F-03-027.
b. U.S. EPA, Office of Air Quality Planning and Standards, "Air Pollution Control Technology Fact Sheet (Dry Electrostatic Precipitator (ESP) - Wire-Plate Type)," EPA-452/F-03-028.
d. U.S. EPA, Office of Air Quality Planning and Standards, "Air Pollution Control Technology Fact Sheet (Wet Electrostatic Precipitator(ESP) - Wire-Pipe Type)," EPA-452/F-03-029.
e. U.S. EPA, Office of Air Quality Planning and Standards, "Air Pollution Control Technology Fact Sheet (Cyclone)," EPA-452/F-03-005.

7.5. GHG BACT

7.5.1. Background on Pollution Formation

The combustion of natural gas in the heater results in emissions of CO_2, CH_4, and N_2O. Nearly one-hundred percent of combustion-related GHG emissions are in the form of CO_2 on a mass basis, since each carbon atom combusted in the fuel stream results in nearly one molecule of CO_2 emissions.[41] CH_4 and N_2O form as the result of incomplete combustion and are formed in much lower quantities. Even when scaling CH_4 and N_2O by their relative global warming potentials (GWPs), these constituents combined contribute approximately one percent of the total GHG emissions (on CO_2e basis) resulting from the combustion of natural gas. Therefore, BACT assessment for the heaters is focused on CO_2. In addition, using CO_2 as a surrogate for a CO_2e BACT analysis is consistent with federal regulations.[42] The following section presents a GHG BACT evaluation for the proposed heaters.

7.5.2. Step 1 - Identification of Potential Control Technologies

The available GHG emission control strategies for the heaters are:

- Carbon Capture and Sequestration
- Efficient Heater Design
- Heat Integration
- Low Carbon Fuel Selection
- Good Combustion Practices

7.5.2.1. *Carbon Capture and Sequestration*

The contribution of CO_2e emissions from the heaters is a fraction of the scale for sources where CCS might ultimately be feasible. Although we believe that it is obvious that CCS is not BACT in this case, as directly supported in EPA's GHG BACT Guidance, a detailed rationale is provided to support this conclusion.

For the heaters, CCS would involve post combustion capture of the CO_2 from the heaters and sequestration of the CO_2 in some fashion. In general, carbon capture could be accomplished with low pressure scrubbing of CO_2 from the exhaust stream with solvents (e.g., amines and ammonia), solid sorbents, or membranes. However, only solvents have been used to-date on a commercial (yet slip stream) scale and solid sorbents and membranes are only in the research and development phase. A number of post-combustion carbon capture projects have taken place on slip streams at coal-fired power plants. Although these projects have demonstrated the technical feasibility of small-scale CO_2 capture on a slipstream of a power plant's emissions using various solvent based scrubbing processes, until these post-combustion technologies are installed fully on a power plant, they are not considered "available" in terms of BACT.

Larger scale CCS demonstration projects have been proposed through the DOE Clean Coal Power Initiative (CCPI); however, none of these facilities are operating, and, in fact, they have not yet been fully designed or constructed.[43] Additionally, these demonstration projects are for post-combustion capture on a pulverized coal (PC) plant using a slip stream versus the full exhaust stream. The exhaust from a PC plant would have a significantly higher concentration of CO_2 in the slipstream as compared to a more dilute stream from the

[41] Although small fractions of fuel carbon convert to combustion byproducts such as CO and CH_4, the majority of carbon combusted in the fuel stream is converted to CO_2.

[42] 40 CFR § 52.21(b)(49)(i).

[43] Report of the Interagency Task Force on Carbon Capture & Storage, August 2010, p. 32.

combustion of natural gas.[44] Finally, the compression of the CO_2 would require additional power demand, resulting in additional fuel consumption (and CO_2 emissions).[45]

7.5.2.2. *Efficient Heater Design*

Efficient heater design and proper air-to-fuel ratio improve mixing of fuel and create more efficient heat transfer. Since XTO is proposing to install new heaters, these heaters will be designed to optimize combustion efficiency.

7.5.2.3. *Heat Integration*

The plant is equipped with multiple process-to-process cross heat exchangers for maximum heat integration and high efficiency mass transfer equipment to recover heat and reduce the overall energy use at the plant. The process-to-process cross heat exchangers minimize the size of the heaters to meet the process demands of the train.

7.5.2.4. *Low Carbon Fuel Selection*

Natural gas has the lowest carbon intensity of any available fuel for the heaters. The proposed heaters will be fired with only natural gas fuel.

7.5.2.5. *Good Combustion Practices*

Good combustion and operating practices are a potential control option by improving the fuel efficiency of the heaters. Good combustion practices also include proper maintenance and tune-up of the heaters at least annually per the manufacturer's specifications.

7.5.3. Step 2 - Elimination of Technically Infeasible Control Technologies

CCS is not feasible for small combustion units such as the <100 MMBtu/hr heaters proposed with this project. However, since the proposed project also includes large combustion sources (i.e., CCCTs), it is potentially feasible to capture and transfer CO_2 emissions from these smaller units and combine. As discussed in Section 5.6, CCS is eliminated as a control technology for the CCCT generating units. Therefore, this option is not evaluated in the subsequent analysis. In addition, the RBLC data does not include CCS as a control option for any of the listed sources.

All other control technologies are considered feasible.

7.5.4. Step 3 - Ranking of Remaining Control Technologies

XTO will select all other technically feasible controls to minimize GHG emissions. Therefore, no ranking is necessary.

7.5.5. Step 4 - Evaluation of Most Stringent Controls

No adverse energy, environmental, or economic impacts are associated with the above-mentioned technically feasible control options.

---

[44] Report of the Interagency Task Force on Carbon Capture & Storage, August 2010, p. A-7.

[45] Report of the Interagency Task Force on Carbon Capture & Storage, August 2010, http://www.epa.gov/climatechange/downloads/CCS-Task-Force-Report-2010.pdf, p. 29

7.5.6. Step 5- Selection of BACT

Based on the selection of an efficient heaters, use of pipeline natural gas as fuel, heat integration, and implementing good combustion practices, XTO proposes a CO_2e BACT limit of 117 lb of CO_2e/MMBtu on a rolling 12-month basis. The RBLC data show an emission limit range of 117-120 lb CO_2e /MMBtu as well as annual emission limits based on hours of operation. Therefore, BACT is satisfied for the GHG emissions.

7.6. HEATERS BACT SUMMARY

Based on the BACT analysis presented in the preceding subsections, Table 7-55 summarizes the BACT determinations for the heaters.

Table 7-5 <100 MMBTU/hr Heaters BACT Summary

Heaters	NO_x	0.0267 lb/MMBtu (Stab. & Regen)	Low NO_X burners and good combustion controls
	NO_x	0.034 lb/MMBtu (Cryo)	Low NO_X burners and good combustion controls
	CO	0.0163 lb/MMBtu	Good combustion controls
	VOC	0.0064 lb/MMBtu	Good combustion controls
	$PM_{10}/PM_{2.5}$ (filterable)	0.013 lb/MMBtu	Good combustion practices
	CO_2e	117 lb/MMBtu	Natural gas fuel and good combustion practices

The plant flare and acid gas flare are used during maintenance or upset conditions. The BACT evaluation for fuel combustion emissions from the proposed flares (Units FL1 through FL3) for NO_X, CO, VOC, $PM_{10}/PM_{2.5}$ and CO_2e is provided in Section 8.1. Appendix A provides a summary of RBLC and permit search results.

8.1. BACT FOR VOC, CO, NO_X, $PM_{10}/PM_{2.5}$ AND SO_2

8.1.1. Background on Pollutant formation

Emissions result from the destruction of the off-gas produced during the emergency situations and during planned maintenance, startup, and shutdown activities. The flare is an example of a control device in which the control of certain pollutants causes the formation of collateral GHG emissions. Specifically, the control of CH_4 in the process gas at the flare results in the creation of additional CO_2 emissions. However, given the relative GWPs of CO_2 and CH_4 and the destruction of VOC, it is appropriate to apply combustion controls to CH_4 emissions even though it will form additional CO_2 emissions.

8.1.2. Identify all Available Control Technologies

Using the RBLC search and permit review results, as well as a review of technical literature, potentially applicable control technologies for flares were identified. Table 8-1 outlines the top-down BACT analysis for criteria pollutant emissions from flares.

8.1.3. Selection of BACT for VOC, CO, NO_X, $PM_{2.5}/PM_{10}$

The flares will meet the minimum requirements set out in 40 CFR §60.18 (General control device and work practice requirements) with the following control efficiency requirements.

- Destruction efficiency of 98% for VOC, methane, and H_2S;
- No flaring of halogenated compounds allowed.

Based on the review of the RBLC search and other permit review results, XTO has determined that the BACT for flares is good flare design, good combustion, operating and maintenance practices and use of natural gas as fuel.

Table 8-1. BACT Analysis for Fuel Combustion Emissions from Flares – NO_X, CO, VOC and $PM_{10}/PM_{2.5}$

Table 8-1 BACT Analysis for Fuel Combustion Emissions from Flares – NO_X, CO, VOC and $PM_{10}/PM_{2.5}$

Step 1.	**IDENTIFY AIR POLLUTION CONTROL TECHNOLOGIES**	**Control Technology**	**Fuel Selection (for CO, SO_2, PM_{10}, and $PM_{2.5}$)**	**Good Combustion, Operating, and Maintenance Practices (for all criteria pollutants)**	**Good Flare Design (for all criteria pollutants)**
		Control Technology Description	Use of low-sulfur, natural gas as fuel results in low CO, SO_2, PM_{10} and $PM_{2.5}$ emissions.	Good combustion and operating practices are a potential control option for improving the combustion efficiency of the flare. Good combustion practices include proper operation, maintenance, and tune-up of the flare at least annually per the manufacturer's specifications.	Good flare design can be employed to destroy large fractions of the flare gas. Good flare design includes pilot flame monitoring, flow measurement, and monitoring/control of waste gas heating value.
		Typical Operating Temperature	N/A	N/A	N/A
		Typical Waste Stream Inlet Flow Rate	N/A	N/A	N/A
		Typical Waste Stream Inlet Pollutant Concentration	N/A	N/A	N/A
		Other Considerations	N/A	N/A	N/A
Step 2.	**ELIMINATE TECHNICALLY INFEASIBLE OPTIONS**	**RBLC Database Information**	Included in RBLC	Included in RBLC	Included in RBLC
		Feasibility Discussion	Feasible	Feasible	Feasible
Step 3.	**RANK REMAINING CONTROL TECHNOLOGIES**	**Overall Control Efficiency**	Base Case	Base Case	Base Case
Step 4.	**EVALUATE AND DOCUMENT MOST EFFECTIVE CONTROLS**	**Cost Effectiveness ($/ton)**			
Step 5.	**SELECT BACT**		Permitted emission rate	Permitted emission rate	Permitted emission rate

8.2. BACT FOR GHG

8.2.1. Background on Pollutant formation

Emissions result from the destruction of the off-gas produced during the emergency situations and during planned maintenance, startup and shutdown activities.

8.2.2. Step 1 - Identify All Available Control Technologies

The available GHG emission control strategies for the flare combustion emissions include:

- Carbon Capture and Sequestration;
- Low Carbon Fuel Selection;
- Flare Gas Recovery;
- Good Combustion, Operating, Maintenance Practices;
- Good Flare Design; and
- Limited vent gas releases to flare.

8.2.2.1. *Carbon Capture and Sequestration*

A detailed discussion of CCS technology is provided in previous sections. The emission unit evaluated in this step for the flare is the pilot for the flare.

8.2.2.2. *Fuel Selection*

The fuel for firing the proposed flare will be limited to natural gas fuel. Natural gas has the lowest carbon intensity of any available fuel for the Flare.

8.2.2.3. *Flare Gas Recovery*

Flaring can be reduced by installation of commercially available recovery systems, including recovery compressors and collection and storage tanks. The recovered gas is then utilized by introducing it into the fuel system as applicable.

8.2.2.4. *Good Combustion, Operating, and Maintenance Practices*

Good combustion and operating practices are a potential control option for improving the combustion efficiency of the flare. Good combustion practices include proper operation, maintenance, and tune-up of the flare at least annually per the manufacturer's specifications.

8.2.2.5. *Good Flare Design*

Good flare design can be employed to destroy large fractions of the flare gas. Much work has been done by flare and flare tip manufacturers to assure high reliability and destruction efficiencies. Good flare design includes pilot flame monitoring, flow measurement, and monitoring/control of waste gas heating value.

8.2.2.6. *Limited Vent Gas Releases to Flare*

Minimizing the number and duration of MSS activities and therefore limiting vent gases routed to the flare will help reduce emissions from MSS activities.

8.2.3. Step 2 - Eliminate Technically Infeasible Options

The technical infeasibility of CCS to control flare combustion emissions and flare gas recovery is discussed below. All other control technologies listed in Step 1 are considered technically feasible to control process emissions sent to the flare.

8.2.3.1. *Carbon Capture and Sequestration*

With no ability to collect exhaust gas from a flare other than using an enclosure, post combustion capture is technically infeasible and not an available control option.

8.2.3.2. *Flare Gas Recovery*

Flare gas recovery is deemed technically infeasible for control of GHG emissions from the flares. Specifically, the process gas sent to the flares is rich in CO_2 and cannot be used as fuel gas for the facility. The heat input of the process gas is so low, supplemental fuel will be mixed with the dehydrator waste streams to bring the heating value of combusted gas up to 300 Btu/scf as required by 40 CFR § 60.18.

The flares are also used for control of emissions from emergency situations and MSS activities. Due to the infrequent MSS activities and the amount of gas sent to the flares, it is technically infeasible to re-route the flare gas to a process fuel system and hence, the gas will be combusted by the flares for control. Therefore, flare gas recovery is not feasible for the control of MSS activities. For this project, flare gas recovery is technically infeasible and has been eliminated from further consideration in the remaining steps of the analysis.

8.2.4. Step 3 - Rank Remaining Control Technologies by Control Effectiveness

XTO will select all remaining feasible control technologies to minimize GHG emissions from the flares as listed in Step 1.

8.2.5. Step 4 - Evaluate Most Effective Control Options

No significant adverse energy or environmental impacts (that would influence the GHG BACT selection process) associated with the above-mentioned technically feasible control options are expected.

8.2.6. Step 5 - Select BACT for the Flare

XTO proposes the following design elements and work practices as BACT for the Flare:

- Low carbon fuel selection;
- Good combustion, operating, and maintenance practices;
- Good flare design; and
- Limited vent gas releases to flare.

The flare will meet the requirements of 40 CFR §60.18, and will be properly instrumented and controlled. Emission sources whose MSS emissions are routed to the flare will be operated in a manner to minimize the frequency and duration of such MSS activities and therefore, the amount of MSS vent gas released to the flare.

Emissions from the produced water, slop, and condensate storage tanks, the gunbarrel separator, and truck loading will be routed to a VCD (Unit ECD1). Emissions will be generated by the combustion of natural gas as well as the combustion of the vapors sent to the VCD. The BACT evaluation for the proposed VCD for NO_X, CO, VOC, and GHG (as CO_2e) is provided in Sections 9.1 through 9.5. Appendix A provides a summary of RBLC and permit search results.

9.1. NO_X BACT

9.1.1. Background on Pollutant Formation

The formation of NO_X in the VCD follows the same mechanisms as in engines, turbines, and heaters. Thermal NO_X is the dominant mechanism. Please refer to Section 5.1.1 for a detailed description of NO_X formation.

9.1.2. Identify all Available Control Technologies

Using the RBLC search and permit review results, as well as a review of technical literature, potentially applicable NO_X control technologies for flares, which are similar to VCDs, were identified. Table 9-1 outlines the top-down BACT analysis for NO_X emissions from the VCD.

9.1.3. Selection of BACT for NO_x

Based on the review of the RBLC search and other permit review results, XTO has determined that NO_X BACT for the VCD is the permitted emission rate, which is achievable by utilizing good combustion, operating, and maintenance practices as well as proper fuel selection.

9.2. CO BACT

9.2.1. Background on Pollutant Formation

CO from combustion sources is a by-product of incomplete combustion. Conditions leading to incomplete combustion include insufficient oxygen availability, poor fuel/air mixing, reduced combustion temperature, reduced combustion gas residence time, and load reduction.

9.2.2. Identify all Available Control Technologies

Using the RBLC search and permit review results, as well as a review of technical literature, potentially applicable CO control technologies for flares, which are similar to VCDs, were identified. Table 9-1 outlines the top-down BACT analysis for CO emissions from the VCD.

9.2.3. Selection of BACT for CO

Based on the review of the RBLC search and other permit review results, XTO has determined that CO BACT for the VCD is the permitted emission rate, which is achievable by utilizing good combustion, operating, and maintenance practices as well as proper fuel selection.

9.3. VOC BACT

9.3.1. Background on Pollutant Formation

The formation of VOC is the result of incompletion combustion from natural gas. VOC results when there is insufficient residence time at high temperature to complete the final step in hydrocarbon oxidation. Additionally, the VCD is a unit that is used to control emissions of VOC from the glycol dehydrator still vent, condensate storage tanks, and truck loading operations. In addition to incomplete combustion emissions, additional emissions of VOC result from the un-destructed portion of these vent streams.

9.3.2. Identify all Available Control Technologies

Using the RBLC search and permit review results, as well as a review of technical literature, potentially applicable VOC control technologies for flares, which are similar to VCDs, were identified. Table 9-1 outlines the top-down BACT analysis for VOC emissions from the VCD.

9.3.3. Selection of BACT for VOC

Based on the review of the RBLC search and other permit review results, XTO has determined that VOC BACT for the VCD is the permitted emission rate, which is achievable by utilizing good combustion, operating, and maintenance practices as well as proper fuel selection.

9.4. $PM_{10}/PM_{2.5}$ BACT

9.4.1. Background on Pollutant Formation

Filterable PM emissions from combustion are formed by ash and sulfur in the fuel and, in the case of the VCD, in the vent gases. Combustion of natural gas generates low filterable PM emissions in comparison to other fuels due to its low ash and sulfur contents.

9.4.2. Identify all Available Control Technologies

Using the RBLC search and permit review results, as well as a review of technical literature, potentially applicable $PM_{2.5}/PM_{10}$ control technologies for flares, which are similar to VCDs, were identified. Table 9-1 outlines the top-down BACT analysis for $PM_{2.5}/PM_{10}$ emissions from the VCD.

9.4.3. Selection of BACT for $PM_{10}/PM_{2.5}$

Based on the review of the RBLC search and other permit review results, XTO has determined that $PM_{2.5}/PM_{10}$ BACT for the VCD is the permitted emission rate, which is achievable by utilizing good combustion, operating, and maintenance practices as well as proper fuel selection.

Table 9-1. BACT Analysis for Vapor Combustion Device – NO_X, CO, VOC, and $PM_{10}/PM_{2.5}$

Table 9-1 BACT Analysis for Vapor Combustion Device – NO_X, CO, VOC and $PM_{10}/PM_{2.5}$

Step 1.	**IDENTIFY AIR POLLUTION CONTROL TECHNOLOGIES**	**Control Technology**	**Low NOx Burners** [a]	**Fuel Selection (for CO, SO_2, PM_{10}, and $PM_{2.5}$)**	**Good Combustion, Operating, and Maintenance Practices (for all criteria pollutants)**
		Control Technology Description	Reduce NOx by accomplishing the combustion process in stages. Staging delays the combustion process resulting in a cooler flame which suppresses NOx formation.	Use of low-sulfur, natural gas as fuel results in low CO, SO_2, PM_{10} and $PM_{2.5}$ emissions.	Good combustion and operating practices are a potential control option for improving the combustion efficiency of the vapor combustion device (VCD). Good combustion practices include proper operation, maintenance, and tune-up of the VCD at least annually per the manufacturer's specifications.
		Typical Operating Temperature	1400 °F	N/A	N/A
		Typical Waste Stream Inlet Flow Rate	N/A	N/A	N/A
		Typical Waste Stream Inlet Pollutant Concentration	N/A	N/A	N/A
		Other Considerations		N/A	N/A
Step 2.	**ELIMINATE TECHNICALLY INFEASIBLE OPTIONS**	**RBLC Database Information**	Included in RBLC for the control of NO_X emissions from VCDs.	Included in RBLC	Included in RBLC
		Feasibility Discussion	Per vendor, technically infeasible for this specific application based on low pressure and low flow streams.	Feasible	Feasible
Step 3.	**RANK REMAINING CONTROL TECHNOLOGIES**	**Overall Control Efficiency**		Base Case	Base Case
Step 4.	**EVALUATE AND DOCUMENT MOST EFFECTIVE CONTROLS**	**Cost Effectiveness ($/ton)**			
Step 5.	**SELECT BACT**			Permitted emission rate	Permitted emission rate

9.5. GHG BACT

9.5.1. Background on Pollutant Formation

Emissions from the produced water, slop, and condensate storage tanks, gunbarrel separator, and truck loading are routed to a VCD. GHG Emissions will be generated by the combustion of natural gas as well as the combustion of the vapors sent to the VCD.

The available GHG emission control strategies for the VCDs are:

- Carbon Capture and Sequestration;
- Proper Design;
- Low Carbon Fuel Selection; and
- Good Combustion, Operating, and Maintenance Practices.

9.5.1.1. *Carbon Capture and Sequestration*

A detailed discussion of CCS technology is provided in previous sections. The emission units evaluated in this step for the VCD are the burners on the VCD and CO_2 from combustion of the vapors routed to the VCD. The employment of CCS for the emissions from process units that vent through the heaters were deemed technically infeasible as discussed in Section 7.5.3. Therefore, controlling these minimal emissions generated from the VCD are not technically feasible.

9.5.1.2. *Proper Design*

Good VCD design can be employed to destroy any VOCs and CH_4 entrained in the waste gas from the tanks and loading operations. Good VCD design includes flow measurement and monitoring/control of waste gas heating values.

9.5.1.3. *Low Carbon Fuel Selection*

The fuel for firing the proposed VCD will be limited to natural gas fuel. Natural gas has the lowest carbon intensity of any available fuel for the VCD.

9.5.1.4. *Good Combustion, Operating, and Maintenance Practices*

Good combustion and operating practices are a potential control option by improving the fuel efficiency of the VCD. Good combustion practices also include proper maintenance and tune-up of the VCD at least annually per the manufacturer's specifications.

9.5.2. Step 2 - Elimination of Technically Infeasible Control Technologies

As discussed above in Section 7.5.3, the use of CCS is technically infeasible.

9.5.3. Step 3 - Ranking of Remaining Control Technologies

XTO will select all other technically feasible controls to minimize GHG emissions. Therefore, no ranking is necessary.

9.5.4. Step 4 - Evaluation of Most Stringent Controls

No adverse energy, environmental, or economic impacts are associated with the above-mentioned technically feasible control options.

9.5.5. Step 5 - Selection of BACT

Based on the selection of a properly designed VCD, use of pipeline natural gas as fuel, and implementing good combustion practices, XTO proposes a CO_2e BACT limit of 0.25 lb of CO_2e/scf of gas on a rolling 12-month basis.

9.6. VCD BACT SUMMARY

Based on the BACT analysis presented in the preceding subsections, Table 9-2 summarizes the BACT determinations for the VCD.

Table 9-2 VCD BACT Summary

VCD	NO_x, CO, VOC, $PM_{10}/PM_{2.5}$	Permitted Emission Rate	Good combustor design, good combustion, operating and maintenance practices and use of natural gas
	CO_2e	0.25 lb/scf	Good combustor design, good combustion, operating and maintenance practices and use of natural gas

Emissions from the proposed amine units will be controlled by thermal oxidizers. The thermal oxidizers (TOs) utilize natural gas as fuel and thus result in combustion emissions from fuel as well as combustion of the vent gases. The BACT evaluation for fuel combustion emissions from the proposed thermal oxidizers (Units TO1 through TO3) for NO_X, CO, VOC, $PM_{10}/PM_{2.5}$, and CO_2e is provided in this section8.1. Appendix A provides a summary of RBLC and permit search results.

10.1. NO_X BACT

10.1.1. Background on Pollutant Formation

The formation of NO_X in thermal oxidizers follows a similar mechanism as in other combustion devices. Please refer to Section 5.1.1 for a detailed description of NO_X formation.

10.1.2. Identify All Available Control Technologies

Using the RBLC search and permit review results, as well as a review of technical literature, potentially applicable NO_X control technologies for thermal oxidizers were identified. Table 10-1 outlines the top-down BACT analysis for NO_X emissions from the TOs.

10.1.3. Selection of BACT for NO_x

The most stringent RBLC and permit entries for NO_X control are provided in Appendix A. XTO has determined that the NO_X BACT is utilizing low NO_x burners and good combustion controls with a limit of 30 ppmvd @ 3% O_2.

Table 10-1. BACT Analysis for Thermal Oxidizers – NO_X

Table 10-1. BACT Analysis for Thermal Oxidizer – NOx

Step 1.	**IDENTIFY AIR POLLUTION CONTROL TECHNOLOGIES**	**Control Technology**	**Low NOx Burners** [a]	**Good Combustion Practices**
		Control Technology Description	Reduce NOx by accomplishing the combustion process in stages. Staging delays the combustion process resulting in a cooler flame which suppresses NOx formation.	Operate and maintain the equipment in accordance with good air pollution control practices and with good combustion practices.
		Typical Operating Temperature	1400 °F	N/A
		Typical Waste Stream Inlet Flow Rate	N/A	N/A
		Typical Waste Stream Inlet Pollutant Concentration	N/A	N/A
		Other Considerations	N/A	N/A
Step 2.	**ELIMINATE TECHNICALLY INFEASIBLE OPTIONS**	**RBLC Database Information**	Included in RBLC for the control of NO_X emissions from TOs.	Included in RBLC for the control of NO_X emissions from TOs.
		Feasibility Discussion	Feasible	Feasible
Step 3.	**RANK REMAINING CONTROL TECHNOLOGIES**	**Overall Control Efficiency**	99.9%	Base Case
Step 4.	**EVALUATE AND DOCUMENT MOST EFFECTIVE CONTROLS**	**Cost Effectiveness ($/ton)**		
Step 5.	**SELECT BACT**		30 ppmvd @ 3% O_2	

a. U.S. EPA, Office of Air Quality Planning and Standards, "Technical Bulletin Nitrogen Oxides (NOx), Why and How They are Controlled" EPA 456/F-99-006R.
b. TCEQ Chemical Sources: Current BACT Requirements *Vapor Oxidizers* (2011).

10.2. CO BACT

10.2.1. Background on Pollutant Formation

CO from combustion sources is a by-product of incomplete combustion. Conditions leading to incomplete combustion include insufficient oxygen availability, poor fuel/air mixing, reduced combustion temperature, reduced combustion gas residence time, and load reduction.

10.2.2. Identify All Available Control Technologies

Using the RBLC search and permit review results, as well as a review of technical literature, potentially applicable CO control technologies for the TOs were identified. Table 10-2 outlines the top-down BACT analysis for CO emissions from the TOs.

10.2.3. Selection of BACT for CO

Based on the review of the RBLC search and other permit review results, XTO has determined that the CO BACT is 50 ppmv at 3% O_2 by utilizing good combustion practices.

Table 10-2. BACT Analysis for Thermal Oxidizers – CO

Table 10-2. BACT Analysis for Thermal Oxidizer – CO

Step 1.	**IDENTIFY AIR POLLUTION CONTROL TECHNOLOGIES**	**Control Technology**	**Good Combustion Practices**
		Control Technology Description	Operate and maintain the equipment in accordance with good air pollution control practices and with good combustion practices.
		Typical Operating Temperature	N/A
		Typical Waste Stream Inlet Flow Rate	N/A
		Typical Waste Stream Inlet Pollutant Concentration	N/A
		Other Considerations	N/A
Step 2.	**ELIMINATE TECHNICALLY INFEASIBLE OPTIONS**	**RBLC Database Information**	Included in RBLC for the control of CO emissions from thermal oxidizers or amine units.
		Feasibility Discussion	Feasible
Step 3.	**RANK REMAINING CONTROL TECHNOLOGIES**	**Overall Control Efficiency**	Base Case
Step 4.	**EVALUATE AND DOCUMENT MOST EFFECTIVE CONTROLS**	**Cost Effectiveness ($/ton)**	
Step 5.	**SELECT BACT**		50 ppmvd @ 3%O_2

10.3. VOC BACT

10.3.1. Background on Pollutant Formation

The formation of VOC is the result of incompletion combustion from natural gas. VOC results when there is insufficient residence time at high temperature to complete the final step in hydrocarbon oxidation.

10.3.2. Identify All Available Control Technologies

Using the RBLC search and permit review results, as well as a review of technical literature, potentially applicable VOC control technologies for the TOs were identified. Table 10-3 outlines the top-down BACT analysis for VOC emissions from the TOs.

10.3.3. Selection of BACT for VOC

Based on the review of the RBLC search and other permit review results, XTO has determined that the VOC BACT is the permitted emission rate, achievable by utilizing good combustion practices.

Table 10-3. BACT Analysis for Thermal Oxidizers – VOC

Table 10-3. BACT Analysis for Thermal Oxidizer – VOC

Step 1.	**IDENTIFY AIR POLLUTION CONTROL TECHNOLOGIES**	**Control Technology**	**Proper Equipment Design & Good Combustion Practices**
		Control Technology Description	Operate and maintain the equipment in accordance with good air pollution control practices and with good combustion practices.
		Typical Operating Temperature	N/A
		Typical Waste Stream Inlet Flow Rate	N/A
		Typical Waste Stream Inlet Pollutant Concentration	N/A
		Other Considerations	Oxidizer will be fueled by natural gas, which is a clean fuel that reduces emissions.
Step 2.	**ELIMINATE TECHNICALLY INFEASIBLE OPTIONS**	**RBLC Database Information**	Included in RBLC for the control of VOC emissions from thermal oxidizers.
		Feasibility Discussion	Feasible
Step 3.	**RANK REMAINING CONTROL TECHNOLOGIES**	**Overall Control Efficiency**	Base Case
Step 4.	**EVALUATE AND DOCUMENT MOST EFFECTIVE CONTROLS**	**Cost Effectiveness ($/ton)**	
Step 5.	**SELECT BACT**		Permitted emission rate

10.4. BACT FOR GHG

10.4.1. Background on Pollutant formation

Emissions result from combustion of natural gas as well as amine unit vent gases routed to the thermal oxidizers. The thermal oxidizer is an example of a control device in which the control of certain pollutants causes the formation of collateral GHG emissions. Specifically, the control of CH_4 in the process gas at the TO results in the creation of additional CO_2 emissions via the combustion reaction mechanism. However, given the relative GWPs of CO_2 and CH_4 and the destruction of VOCs and HAPs, it is appropriate to apply combustion controls to CH_4 emissions even though it will form additional CO_2 emissions.

10.4.2. Step 1 - Identify All Available Control Technologies

The available GHG emission control strategies for the thermal oxidizer combustion emissions include:

- Carbon Capture and Sequestration;
- Proper Design;
- Low Carbon Fuel Selection; and
- Good Combustion, Operating, and Maintenance Practices

10.4.2.1. *Carbon Capture and Sequestration*

A detailed discussion of CCS technology is provided in previous sections. The burners, which are the units of interest will have low CO_2 emissions, similar to the heaters.

10.4.2.2. *Proper Design*

Good thermal oxidizer design can be employed to destroy any VOCs and CH_4 entrained in the waste gas from the amine unit. Good thermal oxidizer design includes flow measurement and monitoring/control of waste gas heating values.

10.4.2.3. *Low Carbon Fuel Selection*

The fuel for firing the proposed thermal oxidizers will be limited to natural gas fuel. Natural gas has the lowest carbon intensity of any available fuel for the thermal oxidizers.

10.4.2.4. *Good Combustion, Operating, and Maintenance Practices*

Good combustion and operating practices are a potential control option by improving the fuel efficiency of the thermal oxidizers. Good combustion practices also include proper maintenance and tune-up of the thermal oxidizers at least annually per the manufacturer's specifications.

10.4.3. Step 2 - Eliminate Technically Infeasible Options

As discussed above, the burners are the unit of interest in this section; therefore, the use of CCS is technically infeasible as illustrated in Section 7.5.3 for heaters that use natural gas as fuel. All other control technologies listed in Step 1 are considered technically feasible.

10.4.4. Step 3 - Rank Remaining Control Technologies by Control Effectiveness

XTO will select all feasible control technologies to minimize GHG emissions from the thermal oxidizers.

10.4.5. Step 4 - Evaluate Most Effective Control Options

No significant adverse energy or environmental impacts (that would influence the GHG BACT selection process) associated with the above-mentioned technically feasible control options are expected.

10.4.6. Step 5 - Select BACT for the Thermal Oxidizers

XTO proposes the following design elements and work practices as BACT for the thermal oxidizers:

- Proper Design;
- Low Carbon Fuel Selection (natural gas as fuel); and
- Good combustion, Operating, and Maintenance Practices.

11. BACT EVALUATION FOR PRODUCED WATER STORAGE TANKS

The BACT evaluation for the proposed produced water storage tanks (Units PWTK1 through PWTK2) for VOC is provided in Section 11.1. Appendix A provides a summary of RBLC and permit search results. There are no CH_4 or CO_2 fractions in the produced water; therefore, no GHG BACT is evaluated for this source.

11.1. VOC BACT

11.1.1. Background on Pollutant Formation

VOC emissions from tanks are formed as a result of working and breathing losses. The produced water is processed through a stabilization process before entering the storage tanks. Stabilized produced water has no flashing losses.

11.1.2. Identify all Available Control Technologies

Using the RBLC search and permit review results, as well as a review of technical literature, potentially applicable VOC control technologies were identified based on the principles of control technology and engineering experience for storage tanks. Table 11-1 outlines the top-down BACT analysis for VOC emissions from the produced water storage tanks.

11.1.3. Selection of BACT for VOC

The most stringent RBLC and permit entries for VOC control are provided in Appendix A. XTO has determined that VOC BACT is utilizing a VCD with 99% efficiency for the produced water storage tanks.

Table 11-1. BACT Analysis for Produced Water Storage Tanks – VOC

Table 11-1 BACT Analysis for Produced Water Tanks with Fixed Roof – VOC

Step 1.	**IDENTIFY AIR POLLUTION CONTROL TECHNOLOGIES**	**Control Technology**	**Thermal Incineration[a]**	**Submerged fill, mechanical/liquid mounted seals**
		Control Technology Description	A high temperature control device used for disposing of waste gas streams.	Filling tanks via a submerged fill, white or aluminum paint.
		Typical Operating Temperature	1100 - 1200 °F	N/A
		Typical Waste Stream Inlet Flow Rate	500 - 50,000 scfm	N/A
		Typical Waste Stream Inlet Pollutant Concentration	1500 - 3000 ppmv	N/A
		Other Considerations	Typically not utilized for low-concentration, high-flow organic vapor streams.	N/A
Step 2.	**ELIMINATE TECHNICALLY INFEASIBLE OPTIONS**	**RBLC Database Information**	Included in RBLC for the control of VOC emissions from produced water tanks.	Included in RBLC for the control of VOC emissions from produced water tanks.
		Feasibility Discussion	Feasible	Feasible
Step 3.	**RANK REMAINING CONTROL TECHNOLOGIES**	**Overall Control Efficiency**	99%	Base Case
Step 4.	**EVALUATE AND DOCUMENT MOST EFFECTIVE CONTROLS**	**Cost Effectiveness ($/ton)**		
Step 5.	**SELECT BACT**		99% DRE[b]	

a. U.S. EPA, Office of Air Quality Planning and Standards, "Air Pollution Control Technology Fact Sheet (Thermal Incineration)," EPA-452/F-03-022.

The BACT evaluation for the proposed slop storage tank (Unit OTK7) for VOC is provided in Section 12.1. Appendix A provides a summary of RBLC and permit search results. There are no CH_4 or CO_2 fractions in the slop tank; therefore, no GHG BACT is evaluated for this source.

12.1. VOC BACT

12.1.1. Background on Pollutant Formation

VOC emissions from tanks are formed as a result of working and breathing losses. The slop is processed through a stabilization process before entering the storage tanks. Stabilized slop has no flashing losses.

12.1.2. Identify all Available Control Technologies

Using the RBLC search and permit review results, as well as a review of technical literature, potentially applicable VOC control technologies were identified based on the principles of control technology and engineering experience for storage tanks. Table 12-1 outlines the top-down BACT analysis for VOC emissions from storage tanks.

12.1.3. Selection of BACT for VOC

The most stringent RBLC and permit entries for VOC control are provided in Appendix A. XTO has determined that VOC BACT is utilizing a VCD with 99% efficiency for the slop storage tank.

Table 12-1. BACT Analysis for Slop Storage Tank – VOC

Table 12-1 BACT Analysis for Slop Tank with Fixed Roof – VOC

Step 1.	**IDENTIFY AIR POLLUTION CONTROL TECHNOLOGIES**	**Control Technology**	**Thermal Incineration[a]**	**Submerged fill, mechanical/liquid mounted seals**
		Control Technology Description	A high temperature control device used for disposing of waste gas streams.	Filling tanks via a submerged fill, white or aluminum paint.
		Typical Operating Temperature	1100-1200 °F	N/A
		Typical Waste Stream Inlet Flow Rate	500 - 50,000 scfm	N/A
		Typical Waste Stream Inlet Pollutant Concentration	1500 - 3000 ppmv	N/A
		Other Considerations	Typically not utilized for low-concentration, high-flow organic vapor streams.	N/A
Step 2.	**ELIMINATE TECHNICALLY INFEASIBLE OPTIONS**	**RBLC Database Information**	Included in RBLC for the control of VOC emissions from slop tanks.	Included in RBLC for the control of VOC emissions from slop tanks.
		Feasibility Discussion	Feasible	Feasible
Step 3.	**RANK REMAINING CONTROL TECHNOLOGIES**	**Overall Control Efficiency**	99%	
Step 4.	**EVALUATE AND DOCUMENT MOST EFFECTIVE CONTROLS**	**Cost Effectiveness ($/ton)**		
Step 5.	**SELECT BACT**		99% DRE[b]	

a. U.S. EPA, Office of Air Quality Planning and Standards, "Air Pollution Control Technology Fact Sheet (Thermal Incineration)," EPA-452/F-03-022.
b. As thermal incineration is the most protective option with a DRE of 99%, other options are not considered.

13. BACT EVALUATION FOR CONDENSATE STORAGE TANKS

The BACT evaluation for the proposed condensate storage tanks (Units OTK1 through OTK6) for VOC is provided in Section 13.1 Appendix A provides a summary of RBLC and permit search results. There are no CH_4 or CO_2 fractions in the stabilized condensate; therefore, no GHG BACT is evaluated for this source.

13.1. VOC BACT

13.1.1. Background on Pollutant Formation

VOC emissions in tanks are formed as a result of working and breathing losses. The condensate is processed through a stabilization process before entering the storage tanks. Stabilized condensate has no flashing losses.

13.1.2. Identify all Available Control Technologies

Using the RBLC search and permit review results, as well as a review of technical literature, potentially applicable VOC control technologies were identified based on the principles of control technology and engineering experience for storage tanks. Table 13-1 outlines the top-down BACT analysis for VOC emissions from storage tanks.

13.1.3. Selection of BACT for VOC

The most stringent RBLC and permit entries for VOC control are provided in Appendix A. XTO has determined that VOC BACT is utilizing a VCD with 99% efficiency for the condensate storage tanks.

Table 13-1. BACT Analysis for Condensate Storage Tanks – VOC

Table 13-1 BACT Analysis for Condensate Storage Tanks with Fixed Roof – VOC

Step 1.	**IDENTIFY AIR POLLUTION CONTROL TECHNOLOGIES**	**Control Technology**	**Thermal Incineration[a]**	**Submerged fill, mechanical/liquid mounted seals**
		Control Technology Description	A high temperature control device used for disposing of waste gas streams.	Filling tanks via a submerged fill, white or aluminum paint.
		Typical Operating Temperature	1100-1200 °F	N/A
		Typical Waste Stream Inlet Flow Rate	500 - 50,000 scfm	N/A
		Typical Waste Stream Inlet Pollutant Concentration	1500 - 3000 ppmv	N/A
		Other Considerations	Typically not utilized for low-concentration, high-flow organic vapor streams.	N/A
Step 2.	**ELIMINATE TECHNICALLY INFEASIBLE OPTIONS**	**RBLC Database Information**	Included in RBLC for the control of VOC emissions from condensate tanks.	Included in RBLC for the control of VOC emissions from condensate tanks.
		Feasibility Discussion	Feasible	Feasible
Step 3.	**RANK REMAINING CONTROL TECHNOLOGIES**	**Overall Control Efficiency**	99%	
Step 4.	**EVALUATE AND DOCUMENT MOST EFFECTIVE CONTROLS**	**Cost Effectiveness ($/ton)**		
Step 5.	**SELECT BACT**		99% DRE[b]	

a. U.S. EPA, Office of Air Quality Planning and Standards, "Air Pollution Control Technology Fact Sheet (Thermal Incineration)," EPA-452/F-03-022.
b. As thermal incineration is the most protective option with a DRE of 99%, other options are not considered.

The BACT evaluation for the proposed gunbarrel separator (Unit GBS1) for VOC is provided in Section 14.1. Appendix A provides a summary of RBLC and permit search results. There are no CH_4 or CO_2 fractions in the gunbarrel; therefore, no GHG BACT is evaluated for this source.

14.1. VOC BACT

14.1.1. Background on Pollutant Formation

VOC emissions in the gunbarrel separate are formed as a result of working and breathing losses. The product is processed through a stabilization process before entering the separator. The stabilized product has no flashing losses.

14.1.2. Identify all Available Control Technologies

Using the RBLC search and permit review results, as well as a review of technical literature, potentially applicable VOC control technologies were identified based on the principles of control technology and engineering experience for separators. Table 14-1 outlines the top-down BACT analysis for VOC emissions from the gunbarrel separator.

14.1.3. Selection of BACT for VOC

The most stringent RBLC and permit entries for VOC control are provided in Appendix A. XTO has determined that the VOC BACT is utilizing a VCD with 99% efficiency for the gunbarrel separator.

Table 14-1. BACT Analysis for Gunbarrel Separator – VOC

Table 14-1 BACT Analysis for Gunbarrel with Fixed Roof – VOC

Step 1.	**IDENTIFY AIR POLLUTION CONTROL TECHNOLOGIES**	**Control Technology**	**Thermal Incineration[a]**	**Submerged fill, mechanical/liquid mounted seals**
		Control Technology Description	A high temperature control device used for disposing of waste gas streams.	Filling tanks via a submerged fill, white or aluminum paint.
		Typical Operating Temperature	1100-1200 °F	N/A
		Typical Waste Stream Inlet Flow Rate	500 - 50,000 scfm	N/A
		Typical Waste Stream Inlet Pollutant Concentration	1500 - 3000 ppmv	N/A
		Other Considerations	Typically not utilized for low-concentration, high-flow organic vapor streams.	N/A
Step 2.	**ELIMINATE TECHNICALLY INFEASIBLE OPTIONS**	**RBLC Database Information**	Included in RBLC for the control of VOC emissions from gunbarrel separators.	Included in RBLC for the control of VOC emissions from gunbarrel separators.
		Feasibility Discussion	Feasible	Feasible
Step 3.	**RANK REMAINING CONTROL TECHNOLOGIES**	**Overall Control Efficiency**	99%	
Step 4.	**EVALUATE AND DOCUMENT MOST EFFECTIVE CONTROLS**	**Cost Effectiveness ($/ton)**		
Step 5.	**SELECT BACT**		99% DRE[b]	

a. U.S. EPA, Office of Air Quality Planning and Standards, "Air Pollution Control Technology Fact Sheet (Thermal Incineration)," EPA-452/F-03-022.
b. As thermal incineration is the most protective option with a DRE of 99%, other options are not considered.

15. BACT EVALUATION FOR INTERNAL FLOATING ROOF (IFR) TANKS

The BACT evaluation for the proposed IFR storage tanks (Units IFR1 through IFR4) for VOC is provided in Section 15.1. Appendix A provides a summary of RBLC and permit search results. There are no CH_4 or CO_2 fractions in the stabilized product; therefore, no GHG BACT is evaluated for this source.

15.1. VOC BACT

15.1.1. Background on Pollutant Formation

VOC emissions from tanks are formed as a result of working and breathing losses. The product is processed through a stabilization process before entering the storage tanks. The stabilized product has no flashing losses.

15.1.2. Identify all Available Control Technologies

Using the RBLC search and permit review results, as well as a review of technical literature, potentially applicable VOC control technologies were identified based on the principles of control technology and engineering experience for storage tanks. Table 15-1 outlines the top-down BACT analysis for VOC emissions from storage tanks.

15.1.3. Selection of BACT for VOC

The most stringent RBLC and permit entries for VOC control are provided in Appendix A. XTO has determined that the VOC BACT is utilizing white or aluminum tanks with drain dry design, storing liquids with a TVP less than 11 psia, and utilizing primary and secondary seals for routine operations. Tank cleanings and landings for IFR tanks are considered in Section 17.1.

Table 15-1. BACT Analysis for IFR Tanks – VOC

Table 15-1 BACT Analysis for Condensate Storage Tanks with Internal Floating Roof – VOC

Step 1.	**IDENTIFY AIR POLLUTION CONTROL TECHNOLOGIES**	**Control Technology**	**Thermal Incineration** [a]	**Submerged fill, mechanical/liquid mounted seals**
		Control Technology Description	A high temperature control device used for disposing of waste gas streams.	Tanks painted white or aluminum with drain dry design. Store liquids with TVP less than 11 psia. Primary and secondary seal.
		Typical Operating Temperature	1100-1200 °F	N/A
		Typical Waste Stream Inlet Flow Rate	500 - 50,000 scfm	N/A
		Typical Waste Stream Inlet Pollutant Concentration	1500 - 3000 ppmv	N/A
		Other Considerations	Typically not utilized for low-concentration, high-flow organic vapor streams.	N/A
Step 2.	**ELIMINATE TECHNICALLY INFEASIBLE OPTIONS**	**RBLC Database Information**	Included in RBLC for the control of VOC emissions from storage tanks.	Included in RBLC for the control of VOC emissions from storage tanks.
		Feasibility Discussion	Technically infeasible - portable thermal incineration is included in RBLC for the control of VOC emissions during tank landings and cleanings, but not for routine operations.	Feasible
Step 3.	**RANK REMAINING CONTROL TECHNOLOGIES**	**Overall Control Efficiency**		
Step 4.	**EVALUATE AND DOCUMENT MOST EFFECTIVE CONTROLS**	**Cost Effectiveness ($/ton)**		
Step 5.	**SELECT BACT**			Permitted emission rate

a. U.S. EPA, Office of Air Quality Planning and Standards, "Air Pollution Control Technology Fact Sheet (Thermal Incineration)," EPA-452/F-03-022.

The BACT evaluation for the proposed fixed roof tank cleaning events (Unit SSM) for VOC is provided in Section 16.1. Appendix A provides a summary of RBLC and permit search results. No GHG BACT is evaluated for this source.

16.1. VOC BACT

16.1.1. Background on Pollutant Formation

VOC emissions are released during tank cleaning events as emissions are vented to the atmosphere during these maintenance activities.

16.1.2. Identify all Available Control Technologies

Using the RBLC search and permit review results, as well as a review of technical literature, potentially applicable VOC control technologies were identified based on the principles of control technology and engineering experience for storage tanks. Table 11-1 outlines the top-down BACT analysis for VOC emissions during cleaning events from the fixed roof storage tanks.

16.1.3. Selection of BACT for VOC

The most stringent RBLC and permit entries for VOC control are provided in Appendix A. XTO has determined that VOC BACT is limiting the number of tank cleanings per any 12 consecutive month period to reduce emissions vented to the atmosphere.

Table 16-1. BACT Analysis for Fixed Roof Tank Cleanings – VOC

Table 16-1 BACT Analysis for Condensate Storage Tank Cleanings – VOC

Step 1.	**IDENTIFY AIR POLLUTION CONTROL TECHNOLOGIES**	**Control Technology**	**Reduction in Number of Tank Cleanings**	**Thermal Incineration[a]**
		Control Technology Description	Limit the number of tank cleanings per any 12 consecutive month period to reduce emissions vented to atmosphere.	A high temperature control device used for disposing of waste gas streams.
		Typical Operating Temperature	N/A	1100-1200 °F
		Typical Waste Stream Inlet Flow Rate	N/A	500 - 50,000 scfm
		Typical Waste Stream Inlet Pollutant Concentration	N/A	1500 - 3000 ppmv
		Other Considerations	N/A	Typically not utilized for low-concentration, high-flow organic vapor streams.
Step 2.	**ELIMINATE TECHNICALLY INFEASIBLE OPTIONS**	**RBLC Database Information**	Included in RBLC for the control of VOC emissions from storage tanks during SSM associated with tank cleaning. Thermal incineration has been deemed technically infeasible for SSM events associated with cleaning based on magnitude and frequency of tank cleanings. Tank cleaning emissions are well within the requested 10 tpy allowable limit.	Not included in RBLC for the control of VOC emissions from condensate tanks during tank cleanings.
		Feasibility Discussion	Feasible	Technically infeasible. Not implemented for the cleaning of fixed roof tanks with a capacity ≤ 2000 bbl.
Step 3.	**RANK REMAINING CONTROL TECHNOLOGIES**	**Overall Control Efficiency**		
Step 4.	**EVALUATE AND DOCUMENT MOST EFFECTIVE CONTROLS**	**Cost Effectiveness ($/ton)**		
Step 5.	**SELECT BACT**		Permitted emission rate	

a. U.S. EPA, Office of Air Quality Planning and Standards, "Air Pollution Control Technology Fact Sheet (Thermal Incineration)," EPA-452/F-03-022.

17. BACT EVALUATION FOR IFR TANK CLEANINGS AND LANDINGS

The BACT evaluation for the proposed IFR Tank cleanings and landings (Unit SSM) for VOC is provided in Section 17.1. Appendix A provides a summary of RBLC and permit search results. No GHG BACT is evaluated for this source.

17.1. VOC BACT

17.1.1. Background on Pollutant Formation

VOC emissions are formed during IFR landing and tank cleaning activities as emissions are released to the atmosphere.

17.1.2. Identify all Available Control Technologies

Using the RBLC search and permit review results, as well as a review of technical literature, potentially applicable VOC control technologies were identified based on the principles of control technology and engineering experience for IFR tanks. Table 17-1 outlines the top-down BACT analysis for VOC emissions from maintenance events associated with the IFR tanks.

17.1.3. Selection of BACT for VOC

The most stringent RBLC and permit entries for VOC control are provided in Appendix A. XTO has determined that the VOC BACT is limiting the number of roof landings and tank cleanings per any 12 consecutive month period to reduce emissions vented to the atmosphere.

Table 17-1. BACT Analysis for IFR Tank Cleanings and Landings – VOC

Table 17-1 BACT Analysis for Condensate Storage Tanks with Internal Floating Roof – VOC

Step 1.	**IDENTIFY AIR POLLUTION CONTROL TECHNOLOGIES**	**Control Technology**	**Reduction in Number of Tank Landings and Cleanings**	**Thermal Incineration[a]**
		Control Technology Description	Limit the number of roof landings and tank cleanings per any 12 consecutive month period to reduce emissions vented to atmosphere.	A high temperature control device used for disposing of waste gas streams.
		Typical Operating Temperature	N/A	1100-1200 °F
		Typical Waste Stream Inlet Flow Rate	N/A	500 - 50,000 scfm
		Typical Waste Stream Inlet Pollutant Concentration	N/A	1500 - 3000 ppmv
		Other Considerations	N/A	Typically not utilized for low-concentration, high-flow organic vapor streams.
Step 2.	**ELIMINATE TECHNICALLY INFEASIBLE OPTIONS**	**RBLC Database Information**	Included in RBLC for the control of VOC emissions from storage tanks during SSM associated with tank landings and tank cleaning.	Included in RBLC for the control of VOC emissions from storage tanks during tank landings and tank cleaning.
		Feasibility Discussion	Feasible	Technically infeasible based on magnitude and frequency of tank landings and cleanings. Calculations show IFR tank landing emissions to be 1.66 tpy VOC, and cleaning emissions to be 0.66 tpy VOC. Total emissions are well within the requested 10 tpy allowable limit.
Step 3.	**RANK REMAINING CONTROL TECHNOLOGIES**	**Overall Control Efficiency**		
Step 4.	**EVALUATE AND DOCUMENT MOST EFFECTIVE CONTROLS**	**Cost Effectiveness ($/ton)**		
Step 5.	**SELECT BACT**		Permitted emission rate	

a. U.S. EPA, Office of Air Quality Planning and Standards, "Air Pollution Control Technology Fact Sheet (Thermal Incineration)," EPA-452/F-03-022.

18. BACT EVALUATION FOR TRUCK UNLOADING OF CONDENSATE

The BACT evaluation for the proposed condensate truck unloading for VOC is provided in Section 18.1. Appendix A provides a summary of RBLC and permit search results. There are no CH_4 or CO_2 fractions in the stabilized condensate; therefore, no GHG BACT is evaluated for this source.

18.1. VOC BACT

18.1.1. Background on Pollutant Formation

VOC emissions are formed as a result of evaporative losses of the condensate during unloading into tanks.

18.1.2. Identify all Available Control Technologies

Using the RBLC search and permit review results, as well as a review of technical literature, potentially applicable VOC control technologies were identified based on the principles of control technology and engineering experience for unloading operations. Table 18-1 outlines the top-down BACT analysis for VOC emissions from truck unloading.

18.1.3. Selection of BACT for VOC

The most stringent RBLC and permit entries for VOC control are provided in Appendix A. XTO has chosen to use a VCD for VOC BACT with 99% efficiency for the unloading operations.

Table 18-1. BACT Analysis for Truck Unloading of Condensate – VOC

Table 18-1 BACT Analysis for Truck Unloading (RVP 10.4) – VOC

Step 1.	**IDENTIFY AIR POLLUTION CONTROL TECHNOLOGIES**	**Control Technology**	**Thermal Incineration[a]**	**Dry Break Hoses and Specialized Connection**
		Control Technology Description	A high temperature control device used for disposing of waste gas streams.	Specialized connection system of transfer valves to minimize vapors released. Dry break hoses.
		Typical Operating Temperature	1100-1200°F	N/A
		Typical Waste Stream Inlet Flow Rate	500 - 50,000 scfm	N/A
		Typical Waste Stream Inlet Pollutant Concentration	1500 - 3000 ppmv	N/A
		Other Considerations	Typically not utilized for low-concentration, high-flow organic vapor streams.	N/A
Step 2.	**ELIMINATE TECHNICALLY INFEASIBLE OPTIONS**	**RBLC Database Information**	Included in RBLC for the control of VOC emissions from truck unloading.	Included in RBLC for the control of VOC emissions from truck unloading.
		Feasibility Discussion	Feasible. Emissions will occur through the receiving tank, which is controlled by thermal incineration.	Feasible
Step 3.	**RANK REMAINING CONTROL TECHNOLOGIES**	**Overall Control Efficiency**		
Step 4.	**EVALUATE AND DOCUMENT MOST EFFECTIVE CONTROLS**	**Cost Effectiveness ($/ton)**		
Step 5.	**SELECT BACT**		99% DRE	

a. U.S. EPA, Office of Air Quality Planning and Standards, "Air Pollution Control Technology Fact Sheet (Thermal Incineration)," EPA-452/F-03-022.

19. BACT EVALUATION FOR PRODUCED WATER AND SLOP LOADING

The BACT evaluation for the proposed produced water truck loading (Units PWTL and OTL) for VOC is provided in Section 19.1. Appendix A provides a summary of RBLC and permit search results. There are no CH_4 or CO_2 fractions in the stabilized product; therefore, no GHG BACT is evaluated for this source.

19.1. VOC BACT

19.1.1. Background on Pollutant Formation

VOC emissions are formed as a result of evaporative losses of the produced water and slop during loading on to trucks.

19.1.2. Identify all Available Control Technologies

Using the RBLC search and permit review results, as well as a review of technical literature, potentially applicable VOC control technologies were identified based on the principles of control technology and engineering experience for loading operations. Table 19-1 outlines the top-down BACT analysis for VOC emissions from truck loading.

19.1.3. Selection of BACT for VOC

The most stringent RBLC and permit entries for VOC control are provided in Appendix A. XTO has chosen to use a VCD for VOC BACT with 99% efficiency for the loading operations.

Table 19-1. BACT Analysis for Produced Water and Slop Truck Loading – VOC

Table 19-1 BACT Analysis for Truck Loading (Produced Water and Slop Oil) – VOC

Step 1.	**IDENTIFY AIR POLLUTION CONTROL TECHNOLOGIES**	**Control Technology**	**Thermal Incineration**[a]	**Submerged fill, mechanical/liquid mounted seals**
		Control Technology Description	A high temperature control device used for disposing of waste gas streams.	Filling-trucks via a submerged fill pipe and equipping trucks with floating roofs or mechanical/liquid mounted primary and secondary seals helps contain fugitive vapors.
		Typical Operating Temperature	1100-1200°F	N/A
		Typical Waste Stream Inlet Flow Rate	500 - 50,000 scfm	N/A
		Typical Waste Stream Inlet Pollutant Concentration	1500 - 3000 ppmv	N/A
		Other Considerations	Typically not utilized for low-concentration, high-flow organic vapor streams.	N/A
Step 2.	**ELIMINATE TECHNICALLY INFEASIBLE OPTIONS**	**RBLC Database Information**	Included in RBLC for the control of VOC emissions from truck loading.	Included in RBLC for the control of VOC emissions from truck loading.
		Feasibility Discussion	Feasible	Feasible
Step 3.	**RANK REMAINING CONTROL TECHNOLOGIES**	**Overall Control Efficiency**		
Step 4.	**EVALUATE AND DOCUMENT MOST EFFECTIVE CONTROLS**	**Cost Effectiveness ($/ton)**		
Step 5.	**SELECT BACT**		99% DRE	

a. U.S. EPA, Office of Air Quality Planning and Standards, "Air Pollution Control Technology Fact Sheet (Thermal Incineration)," EPA-452/F-03-022.

20.1. BACT FOR VOC AND GHG

The following sections present a BACT evaluation of fugitive VOC and GHG (CO_2 and CH_4) emissions (Unit FUG). It is anticipated that the fugitive emission controls presented in this analysis will provide similar levels of emission reduction for VOC, CO_2, and CH_4. Fugitive components included in the proposed facility include traditional components such as valves and flanges.

20.1.1. Step 1 - Identify All Available Control Technologies

In determining whether a technology is available for controlling VOC and GHG emissions from fugitive components, permits, permit applications, and EPA's RBLC were consulted. Based on these resources, the following available control technologies were identified and are discussed below:

- Installing leakless technology components to eliminate fugitive emission sources;
- Implementing various LDAR programs in accordance with applicable state and federal air regulations;
- Implementing an alternative monitoring program using a remote sensing technology such as infrared camera monitoring;
- Implementing an audio/visual/olfactory (AVO) monitoring program for odorous compounds; and
- Designing and constructing facilities with high quality components and materials of construction compatible with the process.

20.1.1.1. *Leakless Technology Components*

Leakless technology valves are available and currently in use, primarily where highly toxic or otherwise hazardous materials are used. These technologies are generally considered cost prohibitive except for specialized service. Some leakless technologies, such as bellows valves, if they fail, cannot be repaired without a unit shutdown, which often generates additional emissions.

20.1.1.2. *LDAR Programs*

LDAR programs have traditionally been implemented for the control of VOC emissions. BACT determinations related to control of VOC emissions rely on technical feasibility, economic reasonableness, reduction of potential environmental impacts, and regulatory requirements for these instrumented programs. Monitoring direct emissions of CO_2 is not feasible with the normally used instrumentation for fugitive emissions monitoring. However, instrumented monitoring is technically feasible for components in CH_4 service.

20.1.1.3. *Alternative Monitoring Program*

Alternate monitoring programs such as remote sensing technologies have been proven effective in leak detection and repair. The use of sensitive infrared camera technology has become widely accepted as a cost-effective means for identifying leaks of hydrocarbons.

20.1.1.4. *AVO Monitoring Program*

Leaking fugitive components can be identified through AVO methods. The gases and process fluids in the piping components are expected to have discernable odor, making them detectable by olfactory means. A large leak can be detected by sound (audio) and sight. The visual detection can be a direct viewing of leaking gases or a secondary indicator such as condensation around a leaking source due to cooling of the expanding gas as it leaves the leak interface. AVO programs are commonplace in the industry.

20.1.1.5. *High Quality Components*

A key element in the control of fugitive emissions is the use of high-quality equipment that is designed for the specific service in which it is employed. For example, a valve that has been manufactured under high quality conditions can be expected to have lower runout on the valve stem, and the valve stem is typically polished to a smoother surface. Both of these factors greatly reduce the likelihood of leaking.

20.1.2. **Step 2 - Eliminate Technically Infeasible Options**

Recognizing that leakless technologies have not been universally adopted as LAER or BACT, even for toxic or extremely hazardous services, it is reasonable to state that these technologies are impractical for control of VOC and GHG emissions whose impacts have not been quantified. Any further consideration of available leakless technologies for VOC and GHG controls is unwarranted.

All other control options are considered technically feasible.

20.1.3. **Step 3 - Rank Remaining Control Technologies by Control Effectiveness**

20.1.3.1. *LDAR Programs*

Instrumented monitoring is effective for identifying leaking VOC and CH_4, but may be wholly ineffective for finding leaks of CO_2. With CH_4 having a global warming potential greater than CO_2, instrumented monitoring of the fuel and feed systems for CH_4 would be an effective method for control of GHG emissions. Quarterly instrumented monitoring with a leak definition of 500 ppmv (2,000 ppmv for pumps and compressors), accompanied by intense directed maintenance, is generally assigned a control effectiveness of 97% (85% for pumps and compressors).[46]

20.1.3.2. *Alternative Monitoring Program*

Remote sensing using infrared imaging has proven effective for identification of leaks, including leaks of CO_2. The process has been the subject of EPA rulemaking as an alternative monitoring method to the EPA's Method 21. Effectiveness is likely comparable to EPA Method 21 when cost is included in the consideration.

20.1.3.3. *AVO Monitoring Program*

Audio/Visual/Olfactory means of identifying leaks owes its effectiveness to the frequency of observation opportunities. Those opportunities arise as operating technicians make rounds, inspecting equipment during those routine tours of the operating areas. This method cannot generally identify leaks at a low leak rates as instrumented reading can identify; however, low leak rates have lower potential impacts than do larger leaks. This method, due to frequency of observation is effective for identification of larger leaks.

20.1.3.4. *High Quality Components*

Use of high-quality components is effective in preventing emissions of VOC and GHG relative to use of lower quality components.

---

[46] TCEQ published BACT guidelines for fugitive emissions in the document *Air Permit Technical Guidance for Chemical Sources: Equipment Leak Fugitives*, October 2000.

20.1.4. Step 4 - Evaluate Most Effective Control Options

No adverse energy, environmental, or economic impacts are associated with the above-mentioned technically feasible control options.

20.1.5. Step 5 - Select BACT for Fugitive Emissions

Monitoring will be conducted at the facility following the protocol established in 40 CFR 60 Subpart OOOOa. Any leaks discovered will be repaired as quickly as practical. The selected BACT for the fugitives was compared to the RBLC results. Several facilities proposed implementation of LDAR as BACT for fugitive emissions.

Since XTO is implementing the most effective control options available, additional analysis is not necessary. In addition, because fugitive VOC and GHG emissions are estimations only, XTO proposes no numerical BACT limit; but rather proposes to comply with the LDAR provisions detailed in 40 CFR 60 Subpart OOOOa.

Table 20-1. BACT Analysis for Fugitive Emissions – VOC and GHG

Table 20-1 BACT Analysis for Fugitive Emissions – VOC

		Control Technology	Installation of Leakless Equipment	Implementation of LDAR under NSPS OOOOa [a]	Alternative Monitoring Program - Remote Sensors / Infrared Technologies	Audio/Visual/Olfactory (AVO) Monitoring Program[a]	Use High Quality Components and Materials of Construction Compatible with Process
Step 1.	IDENTIFY AIR POLLUTION CONTROL TECHNOLOGIES	Control Technology Description	Leakless technology valves are available and currently in use, primarily where highly toxic or otherwise hazardous materials are used.	The LDAR program has traditionally been developed for the control of VOC emissions. The facility is an onshore natural gas processing plant and is subject to NSPS OOOOa. The facility is required to comply with the monitoring and repair requirements for a LDAR Program per 40 CFR 60, Subpart VVa.	Alternate monitoring programs such as remote sensing technologies have been proven effective in leak detection and repair. The use of sensitive infrared camera technology has become widely accepted as a cost effective means for identifying leaks of hydrocarbons.	Leaking fugitive components can be identified through audio, visual, or olfactory (AVO) methods.	The use of high quality equipment that is designed for the specific service in which it is employed results in effective control of fugitive emissions.
		Typical Operating Temperature	–	–	–	–	–
		Typical Waste Stream Inlet Flow Rate	–	–	–	–	–
		Typical Waste Stream Inlet Pollutant Concentration	–	–	–	–	–
		Other Considerations	–	–	–	–	–
Step 2.	ELIMINATE TECHNICALLY INFEASIBLE OPTIONS	RBLC Database Information	–	Included in RBLC for the control of VOC emissions from fugitive VOC sources.	–	–	–
		Feasibility Discussion	Technically Infeasible. Used for highly toxic or otherwise hazardous material; not implemented or included in RBLC for VOC streams at gas plants.	Technically feasible.	Technically feasible.	Technically feasible for the identification of larger leaks.	Technically feasible.
Step 3.	RANK REMAINING CONTROL TECHNOLOGIES	Overall Control Efficiency		Varies with LDAR program and type of component			–
Step 4.	EVALUATE AND DOCUMENT MOST EFFECTIVE CONTROLS	Cost Effectiveness ($/ton)			Cost effective method for identifying leaks of hydrocarbons.		
Step 5.	SELECT BACT			NSPS OOOOa			

a. EPA document "Leak Detection and Repair - A Best Practices Guide" (http://www.epa.gov/Compliance/resources/publications/assistance/ldarguide.pdf)

The BACT evaluation for the proposed amine unit still vents (Units AU1 through AU3) is provided in this section. Appendix A provides a summary of RBLC and permit search results.

21.1. VOC BACT

21.1.1. Background on Pollutant Formation

VOC emissions are formed as a result of removal of acidic contaminants from natural gas.

21.1.2. Step 1- Identify all Available Control Technologies

Using the RBLC search and permit review results, as well as a review of technical literature, potentially applicable VOC control technologies were identified based on the principles of control technology and engineering experience for amine units. The available emission control options include:

- Best Practices; and
- Catalytic or thermal oxidation.

21.1.2.1. *Best Practices*

Best practices involve ensuring the amine system is maintained and operating with operational specifications.

21.1.2.2. *Operation and maintenance of the equipment in accordance with good air pollution control practices results in less VOC emissions. Thermal Incineration*

A high temperature control device is utilized for disposing the waste gas streams. This control option offers 99% control of VOC emissions.

21.1.3. Step 2 - Eliminate Technically Infeasible Options

The options in Step 1 are considered technically feasible for the amine unit still vents.

21.1.4. Step 3 - Rank the technically feasible control technologies by control effectiveness

Best practices is the base case. Thermal incineration provides 99% overall control technology and is technically feasible for this site.

21.1.5. Step 4 - Evaluate most effective controls

Thermal incineration results in 99% destruction efficiency of VOC and is selected as BACT.

21.1.6. Step 5 - Select BACT

XTO proposes thermal incineration as the control mechanism for the amine unit still vent stream. By controlling the acid gases from this stream, the VOC will also be controlled 99%.

21.2. GHG BACT

21.2.1. Background on Pollutant Formation

The amine units will be used to absorb CO_2 from a fractionated ethane gas stream to produce a treated gas stream with lower CO_2 content. Because the amine units are designed to remove CO_2 from the fractionated gas stream, the generation of CO_2 is inherent to the process, and a reduction of the CO_2 emissions by process changes would reduce the process efficiency. This would result in more CO_2 in the ethane and natural gas liquids that would eventually be emitted.

21.2.2. Step 1 - Identify all Available Control Technologies

The available GHG emission control options for the process emissions include:

- Carbon Capture and Sequestration;
- Flare;
- Thermal Oxidizer;
- Condenser;
- Proper Design and Operations; and
- Use of Tank Flash Gas Recovery System.

21.2.2.1. *Carbon Capture and Sequestration*

As CO_2 separation is one of the primary objectives of the amine unit, the amine regeneration unit produces a gas stream with a high CO_2 content. Accordingly, CCS is one possible option for control of GHG emissions from the amine regeneration unit. CCS has been shown to have a CO_2 control efficiency between 80-90%.

An effective CCS system would require three elements:

- Separation technology for the CO_2 exhaust stream (i.e., "carbon capture" technology),
- Transportation of CO_2 to a storage site, and
- A viable location for long-term storage of CO_2.

These three elements work in series. To execute a CCS program as BACT, all three elements must be available for this project. Geological sequestration of CO_2 can be achieved by one of three methods: (1) a well dedicated to CCS (i.e., a Class VI well) can be drilled and permitted, or (2) CO_2 can be used in Enhanced Oil Recovery (EOR) projects, or (3) CO_2 and other acid gases can be injected in an acid gas injection (AGI) Class II well.

<u>CCS and Class VI wells:</u>

XTO conducted research and analysis to determine the technical feasibility of CO_2 capture and transfer. Since most of the CO_2 emissions from the proposed project are generated from the amine unit, XTO evaluated potential options to capture and transfer the CO_2 from the amine unit still vent to an off-site facility for injection. The CO_2 portion of the amine unit still vent stream will need to be separated from the other components such as VOC from the stream in order to be routed to a CO_2 transfer pipeline.

Class VI wells are wells used for injection of CO_2 into underground subsurface rock formations for long-term storage. A Class VI well requires monitoring and testing to ensure the well is constructed and operated appropriately. The permitting requirements for Class VI wells are listed under 40 CFR 146 Subpart H promulgated pursuant to the Safe Drinking Water Act. The wells are designed to sequester only CO_2, and the requirements for these wells are considerable including the submittal of five specific project plans including the area of review and correction action, testing and monitoring, injection well plugging, post-injection site care and closure, and emergency and remedial response.[47]

Based on the results of these studies, capture and transfer of CO_2 from the amine treatment unit is technically feasible assuming that a Class VI well is available for injection of CO_2. In order to satisfy BACT requirements, this option is further evaluated for energy, environmental, and economic impacts assuming a Class VI injection well is available.

Enhanced Oil Recovery:

EOR technology enhances oil recovery rates by re-injecting CO_2 and hydrocarbon gases recovered from the well (and CO_2 from external sources, as needed) into the geologic formation to maintain well pressure. This technology also requires separation of CO_2 from the other components of the amine unit still vent such as VOC, which would require subsequent treatment prior to being released. CO_2 is a good choice for EOR because CO_2 is partially miscible in oil and lowers the viscosity and surface tension of the fluid for easy displacement.[48] EOR is designed to maintain pressure in an active well, rather than for the long-term sequestration of CO_2. Consequently, EOR projects are not designed with the same considerations for permanent CO_2 sequestration when compared to Class VI wells intended specifically for CCS.

Acid Gas Injection and Class II Wells:

XTO is assessing a third form of capture that can be achieved by AGI wells, specifically dry gas injection systems. AGI stores the acid gas in an isolated subsurface reservoir (Class II wells) that are regulated by New Mexico's Oil Conservation District pursuant to the New Mexico Administrative Code (NMAC) 19.15.26. There are a number of Class II injection wells in New Mexico that have been installed for H_2S injection.[49] However, no wells have been installed for CO_2-only injection. As opposed to Class VI wells that are specific to CO_2 injection, Class II wells are intended for all oil and gas related fluid injection. Specifically, acid gas injection wells are designed to accept CO_2 as well as other acid gases from sour gas processing streams, such as the amine still vent stream at the proposed Husky Plant. The additional processing required for injection into a Class VI well with regards to separating out the CO_2 portion is not required for a Class II well, which saves energy as well as reduces other pollutants such as VOC associated with the emission source.

The ideal reservoir for AGI wells should be located in areas that cannot be compromised by future exploration of oil and gas resources and are far enough below any potable water sources. Reliability of the sequestration depends on natural geologic features of the chosen reservoir such as faulting or fracturing that could allow the acid gas to escape from the reservoir.[50]

Since capture and transfer of CO_2 for off-site transfer is technically feasible for the proposed project, this option is further evaluated for energy, environmental, and economic impacts, in Section 21.2.5.1.

---

[47] EPA Underground Injection Control Geologic Sequestration Rule Training Workshop: UIC GS Rule Elements http://water.epa.gov/type/groundwater/uic/class6/upload/module03permitinfo.pdf

[48] James P. Meyer PhD American Petroleum Institute, "Summary of Carbon Dioxide Enhanced Oil Recovery (CO_2 EOR) Injection Well Technology.

[49] http://water.epa.gov/type/groundwater/uic/upload/UIC-Well-Inventory_2010-2.pdf

[50] Dr. David T. Lescinsky. Acid Gas Injection in the Permian and San Juan Basins: Recent Case Studies from New Mexico. Chapter 1. August 31, 2010

21.2.2.2. *Flare*

One option to reduce the GHGs emitted from the Husky Plant is to send stripped amine acid gases to a flare. The flare is an example of a control device in which the control of certain pollutants causes the formation of collateral GHG emissions. Controlling the amine vent streams with a flare would also require supplemental fuel to increase the heating value of the gas to the point that it can be effectively combusted in a flare at 300 Btu/ft^3. This has collateral CO_2 and CH_4 emissions from the additional combustion of the fuel gas. However, given the relative GWPs of CO_2 and CH_4 and the destruction of VOCs and HAPs, it is appropriate to apply combustion controls to CH_4 emissions even though it will form additional CO_2 emissions. In general, flares have a destruction efficiency rate (DRE) of 98%, resulting in minor CH_4 emissions from the process flare due to incomplete combustion of CH_4. Additionally, the flare requires the use of a continuous pilot ignition system or equivalent that results in additional GHG emissions.

21.2.2.3. *Thermal Oxidizer*

Another option to reduce the GHGs emitted from the Husky Plant is to send stripped amine acid gases to a thermal oxidizer (TO). The TO is an example of a control device in which the control of certain pollutants causes the formation of collateral GHG emissions, the control of CH_4 in the process gas at the TO results in the creation of additional CO_2 emissions via the combustion reaction mechanism. However, given the relative GWPs of CO_2 and CH_4 and the destruction of VOCs and HAPs, it is appropriate to apply combustion controls to CH_4 emissions even though it will form additional CO_2 emissions. In general, TOs have a destruction efficiency rate (DRE) greater than of 99%, resulting in minor CH_4 emissions from the process flare due to incomplete combustion of CH_4.

21.2.2.4. *Condenser*

Condensers provide supplemental emissions control by reducing the temperature of the still column vent vapors on amine units to condense water and VOCs, including CH_4. The condensed liquids are then collected for further treatment or disposal. The reduction efficiency of the condensers is variable and depends on the type of condenser and the composition of the waste gas, ranging from 50-98% of the CH_4 emissions in the waste gas stream.

21.2.2.5. *Proper Design and Operations*

The amine units will be new equipment installed on site. New equipment has better energy efficiency, hence reducing the GHGs emitted during combustion. The new equipment will operate at a minimum circulation rate with consistent amine concentrations. By minimizing the circulation rate, the equipment avoids pulling out additional VOCs and GHGs in amine streams, which would increase VOC and GHG emissions into the atmosphere.

21.2.2.6. *Use of Tank Flash Gas Recovery Systems*

The amine units will be equipped with flash tanks. The flash tanks will be used to recycle off-gases formed as the pressure of the rich glycol/rich amine streams drops to remove lighter compounds in the stream prior to entering the reboiler. These off-gases are recycled back into the plant for reprocessing, instead of venting to the atmosphere or combustion device. The use of flash tanks increases the effectiveness of other downstream control devices.

21.2.3. **Step 2 - Eliminate Technically Infeasible Options**

All above options are considered technically feasible for the amine unit still vents.

21.2.4. Step 3 - Rank the technically feasible control technologies by control effectiveness

The control options for minimizing GHG emissions from the amine units are ranked below:

Table 21-1. GHG Reduction Efficiencies and Ranking

Rank	Control Technology	Estimated CO_2e Reduction	Reduction Details	Reference
1	Carbon Capture and Sequestration	80%	Reduction of all GHGs.	Available and Emerging Technologies for Reducing Greenhouse Gas Emissions from the Petroleum Refining Industry issued by EPA October 2010 Section 5.1.4 Carbon Capture. *(Also noted that industrial application of this technology is not expected to be available for 10 years.)*
2	Proper Design and Operation	1% - 10%	Reduction of all GHGs.	Available and Emerging Technologies for Reducing Greenhouse Gas Emissions from the Petroleum Refining Industry issued by EPA October 2010 Section 5.1.1.5 Improved Maintenance
3	Condenser	50-98% for CH_4	Reduction of CH_4 in acid gas	
4	Use of Tank Flash Gas Recovery Systems	< 0.25%	Reduction of CH_4 in flash gas only.	Hard piped back into the system
5	Thermal Oxidizer	--	Reduction in acid gas CH_4. Increase in CO_2 due to acid gas combustion and supplemental fuel	Vendor Data
6	Flare	--	Reduction in acid gas CH_4. Increase in CO_2 due to acid gas, supplemental fuel, and pilot gas combustion.	http://www.tceq.texas.gov/permitting/air/guidance/newsourcereview/flares/

21.2.5. Step 4 - Evaluate most effective controls

The only option that is technically feasible, but could have a significant adverse energy or environmental impacts (that would influence the GHG BACT selection process) is the use of CCS as discussed below. All other control technologies listed in Step 1 are considered technically feasible with no significant adverse energy or environmental impacts (that would influence the GHG BACT selection process).

21.2.5.1. *Carbon Capture and Sequestration*

While the amine acid gas stream routed to the TO is relatively high in CO_2 content, additional processing of the exhaust gas will be required to implement CCS. These include separation (removal of other pollutants from the combustion gases), capture, and compression of CO_2, transfer of the CO_2 stream and sequestration of the CO_2 stream. These processes require additional equipment to reduce the exhaust temperature, compress the gas, and transport the gas via pipelines. These units would require additional electricity and generate additional air emissions, of both criteria pollutants and GHG pollutants. This would result in negative environmental and energy impacts.

As part of the CO_2 transfer feasibility analysis, XTO reviewed currently active CO_2 injection wells identified on the ArcGIS website, which was compiled by the New Mexico Energy, Minerals, and Natural Resources Department.[51] This website provides the details of oil, gas, and CO_2 production wells as well as injection and salt water disposal wells in the State of New Mexico. Most of the wells are permitted to inject saltwater and not permitted for CO_2 injection. Therefore, XTO refined that search to identify CO_2 injection wells. Figure 21-1 shows a map of the location of the Husky Plant and the CO_2 injection wells, that are active. The nearest active CO_2 wells, operated by OXY USA Inc (Bravo Dome), are located approximately 200 miles from the proposed Husky Plant.[52]

[51] Energy Production Wells, New Mexico, 2018 - NM_Wells_District_All_UTM_NAD83_Z13_SHP, available at: https://www.arcgis.com/home/item.html?id=8381d83488c749e19a20412ebc08edd1

[52] https://wwwapps.emnrd.state.nm.us/ocd/ocdpermitting/Data/WellDetails.aspx?api=30-021-20428

Figure 21-1. Map of Husky Plant and Nearest CO_2 Injection Wells

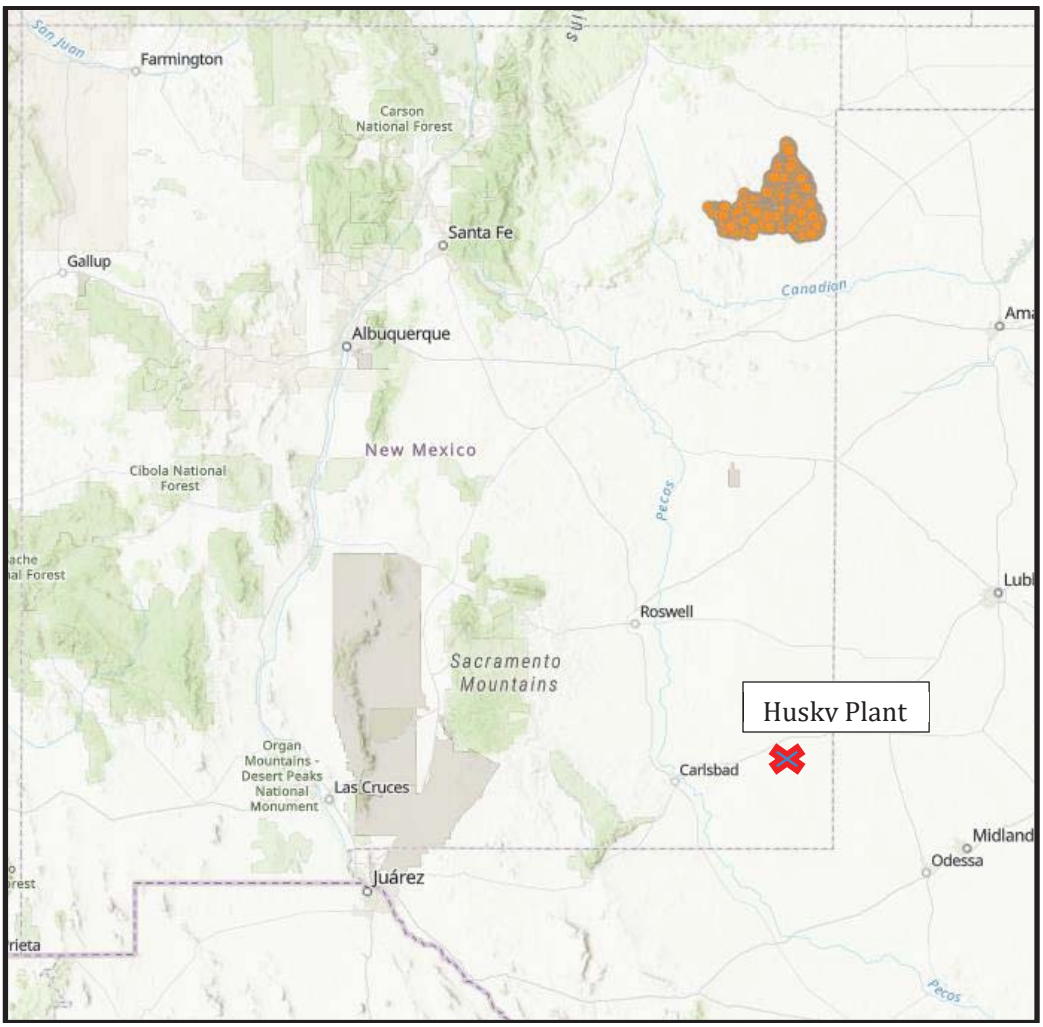

In addition, XTO reviewed CO_2 transfer pipelines available to transfer CO_2 to a nearby pipeline for EOR. An exhibit from the National Energy Technology Laboratory (NETL)'s publication "A Review of the CO_2 Pipeline Infrastructure in the U.S.", dated April 21, 2015 (DOE/NETL-2014/1681) shows the CO_2 pipelines in the Permian Basin. This is included in Figure 21-2 below.

Figure 21-2. CO_2 Pipelines in Permian Basin

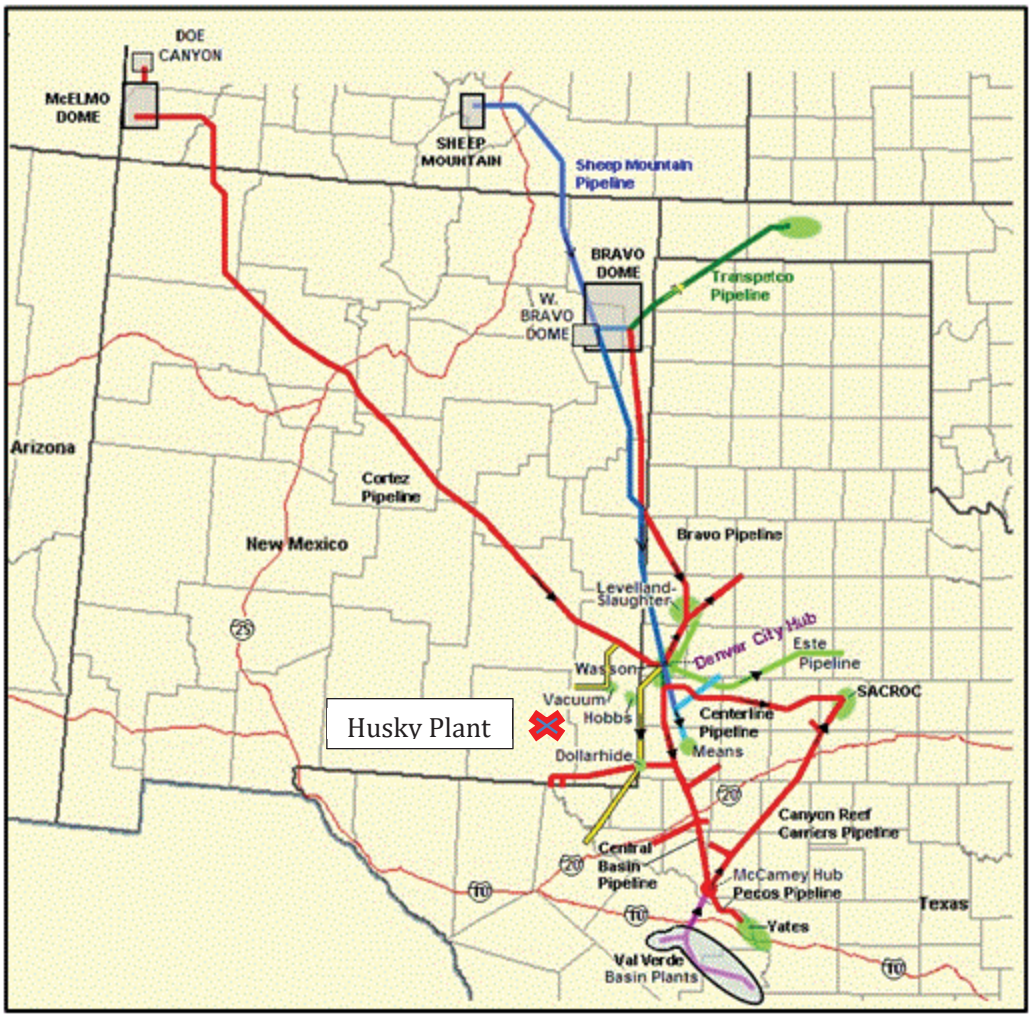

The closest pipeline is approximately 29 miles, located on the south of the Husky Plant (near Texas and New Mexico border). Therefore, XTO estimated the cost of pipeline installation and operation to transfer the CO_2 from the Amine Vents. These costs were obtained from the National Energy Technology Laboratory (NETL)'s Document Quality Guidelines for Energy System Studies Estimating Carbon Dioxide Transport and Storage Costs DOE/NETL-2010/1447, dated March 2010.[53] Per this document, the pipeline costs include pipeline installation costs, other related capital costs, and operation and maintenance (O&M) costs.

Based on the total CO_2 emissions from the Amine Units, a 90% capture efficiency for CCS, and pipeline distance of 29 miles, the estimated cost of CO_2 pipeline installation and operation cost is $18.18 per ton of CO_2 removed, which is economically not viable. As such, XTO contends that CCS is an economically infeasible control technology option and eliminates CCS from further review under this BACT analysis. The cost analysis is provided at the end of this section.

Therefore, based on the comparison between the pipeline transfer cost and the project's annualized cost, although technically feasible, off-site transfer is not regarded as a viable or economically feasible CO_2 control

[53] Quality Guidelines for Energy System Studies Estimating Carbon Dioxide Transport and Storage Costs DOE/NETL-2010/1447

option. Additionally, CO_2 capture and transfer would have negative environmental and energy impacts, as discussed above.

21.2.6. Step 5 - Select BACT

XTO proposes the use of thermal incineration, condensers, flash gas recovery, and proper design and operation as BACT for the amine units.

This section presents the BACT analysis for haul roads (Unit ROAD). Haul roads include roads where trucks travel either to unload condensate or load produced water and/or slop.

22.1.1. Background on Pollutant Formation

Haul roads have the potential to generate dust particles as vehicles traveling on the roads cause particles on the surface of the roads to become suspended in the atmosphere. The particle loading of the road surfaces is an indicator of the potential for vehicles traveling on the roads to generate these suspended dust particles. Unpaved haul roads have a higher potential for particle loading than paved haul roads, as vehicles traveling on unpaved roads can cause pulverization of the unpaved road surface, and the pulverized material contributes to the particle loading of the road.

The dust particles that are generated as vehicles travel on haul roads are filterable particulate matter. Therefore, the BACT evaluation for the haul roads addresses filterable particulate matter. The BACT analysis has been evaluated using the top down approach as shown in Table 22-1 .

22.1.2. Step 1 - Identify all Available Control Technologies

Control options for haul roads are designed to suppress or eliminate road dust. PM reduction options from haul roads include:

- Speed reduction and base course;
- Water application; and
- Paving.

22.1.3. Step 2 - Eliminate Technically Infeasible Options

Paving of roads is not feasible for industrial roads subject to very heavy vehicles. In addition, water application/sweeping is not technically feasible based on the very limited availability of water in the facility's proposed location as well as meteorological and climatological conditions at the proposed facility. Speed reduction and base course are the only technically feasible options remaining for control of PM from haul roads at Husky CDP.

22.1.4. Step 3 - Rank Remaining Control Technologies by Control Effectiveness

Speed reduction and base course are the remaining control technologies for reducing particulate matter from the surface of the roads.

22.1.5. Step 4 - Evaluate Most Effective Control Options

The particulate emissions from the haul roads are less than 5% of facility-wide PM totals. The impacts from this source are a small fraction of the proposed facility. Limiting the speed at the facility to 15 mph provides 57% control and base course provides a 60% reduction.[54] XTO has determined that these control options are sufficient for the low-emission source.

[54] WRAP Fugitive Dust Handbook, Fugitive Dust Control Measures Applicable for the WRAP Region (September 7, 2006).

22.1.6. Step 5 - Select BACT for Haul Roads

XTO proposes to limit the speed of haul trucks to 15 mph by posting speed limit signs at regular intervals along the haul road. XTO will also apply an aggregate base course. This will result in a 57% and 60% control of the particulate matter emissions respectively.

Table 22-1. BACT Analysis for Haul Road Emissions – $PM_{10}/PM_{2.5}$

Table 22-1 BACT Analysis for Haul Road Emissions – $PM_{10}/PM_{2.5}$

Step 1.	**IDENTIFY AIR POLLUTION CONTROL TECHNOLOGIES**	**Control Technology**	**Speed Reduction and Base Course**[a]	**Water Application/Sweeping**	**Paving**
		Control Technology Description	A limit on the speed of the vehicular traffic and use of aggregate base course prevents disturbance of particulate matter from the surface of the road.	Spraying water on the roads has been found to reduce fugitive emissions from unpaved haul roads.	A durable surface material like asphalt or concrete is laid out on the road, to sustain vehicular traffic.
		Typical Operating Temperature	–	–	–
		Typical Waste Stream Inlet Flow Rate	–	–	–
		Typical Waste Stream Inlet Pollutant Concentration	–	–	–
		Other Considerations	–	–	–
Step 2.	**ELIMINATE TECHNICALLY INFEASIBLE OPTIONS**	**RBLC Database Information**	Included in RBLC	Included in RBLC	Included in RBLC
		Feasibility Discussion	Feasible	Technically infeasible based on the very limited availability of water in the facility's proposed location as well as meteorological and climatological conditions at facility.	Technically infeasible for industrial roads which are subject to very heavy vehicles and pavement breakage. Paving is not common for O&G facilities in the area.
Step 3.	**RANK REMAINING CONTROL TECHNOLOGIES**	**Overall Control Efficiency**	Since the emissions from this source are minor, limiting the speed at the facility to 15 mph provides a 57% control, and base course provides a 60% control. These controls provide a cost effective method of controlling emissions.		
Step 4.	**EVALUATE AND DOCUMENT MOST EFFECTIVE CONTROLS**	**Cost Effectiveness ($/ton)**			
Step 5.	**SELECT BACT**		57% Reduction - Speed Limit 60% Reduction - Base Course		

[a] WRAP Fugitive Dust Handbook, Fugitive Dust Control Measures Applicable for the WRAP Region (September 7, 2006).

The BACT evaluation for the proposed SSM activities (Unit SSM) for VOC is provided in Section 23.1. Appendix A provides a summary of RBLC and permit search results. No GHG BACT is evaluated for the SSM activities.

23.1. VOC BACT

23.1.1. Background on Pollutant Formation

VOC emissions are formed as a result of startup, shutdown, and maintenance activities such as during plant turnarounds, pigging, purging, and other maintenance.

23.1.2. Identify all Available Control Technologies

Using the RBLC search and permit review results, as well as a review of technical literature, potentially applicable VOC control technologies were identified based on the principles of control technology and engineering experience for SSM activities. Table 23-1 outlines the top-down BACT analysis for VOC emissions from SSM activities.

23.1.3. Selection of BACT for VOC

The most stringent RBLC and permit entries for VOC control are provided in Appendix A. XTO has chosen to send SSM emissions to a flare for VOC BACT with a 98% DRE during plant turnarounds and will implement best practices for pigging, purging, and other maintenance activities.

Table 23-1. BACT Analysis for SSM Activities – VOC

Table 23-1. BACT Analysis for SSM Activities – VOC

Step 1.	**IDENTIFY AIR POLLUTION CONTROL TECHNOLOGIES**	**Control Technology**	**Thermal Incineration[a]**	**Best Practices**
		Control Technology Description	A high temperature control device used for disposing of waste gas streams.	Operate and maintain the equipment in accordance with good air pollution control practices and with good combustion practices.
		Typical Operating Temperature	1100-1600 °F	N/A
		Typical Waste Stream Inlet Flow Rate	500 - 50,000 scfm	N/A
		Typical Waste Stream Inlet Pollutant Concentration	1500 - 3000 ppmv	N/A
		Other Considerations		N/A
Step 2.	**ELIMINATE TECHNICALLY INFEASIBLE OPTIONS**	**RBLC Database Information**	Included in RBLC for the control of VOC emissions from SSM activities.	Included in RBLC for the control of VOC emissions from SSM activities.
		Feasibility Discussion	Feasible	Feasible
Step 3.	**RANK REMAINING CONTROL TECHNOLOGIES**	**Overall Control Efficiency**	Flare: 98%	Base Case
Step 4.	**EVALUATE AND DOCUMENT MOST EFFECTIVE CONTROLS**	**Cost Effectiveness ($/ton)**		
Step 5.	**SELECT BACT**		BACT for plant turnarounds emissions sent to the flare (98% DRE).	BACT for pigging, purging & general maintenance.

a. U.S. EPA, Office of Air Quality Planning and Standards, "Air Pollution Control Technology Fact Sheet (Thermal Incineration)," EPA-452/F-03-022.

APPENDIX A. RBLC TABLES

APPENDIX A – RBLC TABLES

XTO Energy Inc. > Husky Central Delivery Point

October 2019

Project 193201.0154

Trinity Consultants

Environmental solutions delivered uncommonly well

1. LARGE COMBUSTION CYCLE TURBINES > 25MW (RLBC CODE 15.210)

RBLC SUMMARY FOR COMBUSTION TURBINES - NO_x										
RBLCID	FACILITY_NAME	PERMIT_ISSUANCE_DATE	PROCESS_NAME	THROUGHPUT	THROUGHPUT_UNIT	POLLUTANT	CONTROL_METHOD_DESCRIPTION	EMISSION_LIMIT_1	EMISSION_LIMIT_1_UNIT	EMISSION_LIMIT_1_AVG_TIME_CONDITION
AK-0071	INTERNATIONAL STATION POWER PLANT	12/20/2010 ACT	GE LM6000PF-2S Turbines (4)	59900	hp ISO	Nitrogen Oxides (NOx)	Selective Catalytic Reduction and Dry Low NOx Combustion	5	PPMDV	4-HOUR AVERAGE
CA-1177	OTAY MESA ENERGY CENTER LLC	07/22/2009 ACT	Gas turbine combined cycle	171.7	MW	Nitrogen Oxides (NOx)	SCR	2	PPMVD@15% OXYGEN	1 HOUR
CA-1191	VICTORVILLE 2 HYBRID POWER PROJECT	03/11/2010 ACT	COMBUSTION TURBINE #1 (COLD STARTUP PERIODS)	154	MW	Nitrogen Oxides (NOx)	SCR	52.4	LB/H	COLD STARTUP PERIODS
CA-1191	VICTORVILLE 2 HYBRID POWER PROJECT	03/11/2010 ACT	COMBUSTION TURBINE #1 (WARM & HOT STARTUP PERIODS)	154	MW	Nitrogen Oxides (NOx)	SCR	30	LB/H	WARM & HOT STARTUP PERIODS
CA-1191	VICTORVILLE 2 HYBRID POWER PROJECT	03/11/2010 ACT	COMBUSTION TURBINE #1 (SHUTDOWN PERIODS)	154	MW	Nitrogen Oxides (NOx)	SCR	114	LB/H	SHUTDOWN PERIODS
CA-1191	VICTORVILLE 2 HYBRID POWER PROJECT	03/11/2010 ACT	COMBUSTION TURBINE #2 (NORMAL OPERATION, NO DUCT BURNING)	154	MW	Nitrogen Dioxide (NO2)	SCR	2	PPMVD	@15% O2, 1-HR AVG (NO DUCT BURNING)
CA-1191	VICTORVILLE 2 HYBRID POWER PROJECT	03/11/2010 ACT	COMBUSTION TURBINE #2 (COLD STARTUP PERIODS)	154	MW	Nitrogen Oxides (NOx)	SCR	52.4	LB/H	COLD STARTUP PERIODS
CA-1191	VICTORVILLE 2 HYBRID POWER PROJECT	03/11/2010 ACT	COMBUSTION TURBINE #2 (WARM & HOT STARTUP PERIODS)	154	MW	Nitrogen Oxides (NOx)	SCR	30	LB/H	WARM & HOW STARTUP PERIODS
CA-1191	VICTORVILLE 2 HYBRID POWER PROJECT	03/11/2010 ACT	COMBUSTION TURBINE #2 (SHUTDOWN PERIODS)	154	MW	Nitrogen Oxides (NOx)	SCR	114	LB/H	SHUTDOWN PERIODS
CA-1191	VICTORVILLE 2 HYBRID POWER PROJECT	03/11/2010 ACT	COMBUSTION TURBINE #2 (NORMAL OPERATION, WITH DUCT BURNING)	154	MW	Nitrogen Dioxide (NO2)	SCR	2	PPMVD	@15% O2, 1-HR AVG (W/ DUCT BURNING)
CA-1191	VICTORVILLE 2 HYBRID POWER PROJECT	03/11/2010 ACT	COMBUSTION TURBINE #1 (NORMAL OPERATION, NO DUCT BURNING)	154	MW	Nitrogen Dioxide (NO2)	SCR	2	PPMVD	1-HR AVG, @15% O2 (NO DUCT BURNING)
CA-1191	VICTORVILLE 2 HYBRID POWER PROJECT	03/11/2010 ACT	COMBUSTION TURBINE #1 (NORMAL OPERATION, WITH DUCT BURNING)	154	MW	Nitrogen Dioxide (NO2)	SCR	2	PPMVD	@15% O2, 1-HR AVG (W/ DUCT BURNING)
CA-1192	AVENAL ENERGY PROJECT	06/21/2011 ACT	COMBUSTION TURBINE #1 (NORMAL OPERATION, NO DUCT BURNING)	180	MW	Nitrogen Oxides (NOx)	SCR, DRY LOW NOX COMBUSTORS	2	PPMVD	@15% O2, 1-HR AVG
CA-1192	AVENAL ENERGY PROJECT	06/21/2011 ACT	COMBUSTION TURBINE #1 (NORMAL OPERATION, WITH DUCT BURNING)	180	MW	Nitrogen Oxides (NOx)	SCR, DRY LOW NOX COMBUSTORS	2	PPMVD	@15% O2, 1-HR AVG
CA-1192	AVENAL ENERGY PROJECT	06/21/2011 ACT	COMBUSTION TURBINE #1 (STARTUP & SHUTDOWN PERIODS)	180	MW	Nitrogen Oxides (NOx)	SCR, DRY LOW NOX COMBUSTORS	160	LB/H	EACH TURBINE & HRSG
CA-1192	AVENAL ENERGY PROJECT	06/21/2011 ACT	COMBUSTION TURBINE #2 (NORMAL OPERATION, NO DUCT BURNING)	180	MW	Nitrogen Oxides (NOx)	SCR, DRY LOW NOX COMBUSTORS	2	PPMVD	@15% O2, 1-HR AVG
CA-1192	AVENAL ENERGY PROJECT	06/21/2011 ACT	COMBUSTION TURBINE #2 (NORMAL OPERATION, WITH DUCT BURNING)	180	MW	Nitrogen Oxides (NOx)	SCR, DRY LOW NOX COMBUSTORS	2	PPMVD	@15% O2, 1-HR AVG
CA-1192	AVENAL ENERGY PROJECT	06/21/2011 ACT	COMBUSTION TURBINE #2 (STARTUP & SHUTDOWN PERIODS)	180	MW	Nitrogen Oxides (NOx)	SCR, DRY LOW NOX COMBUSTORS	160	LB/H	EACH TURBINE & HRSG
CA-1209	HIGH DESERT POWER PROJECT	03/11/2010 ACT	COMBUSTION TURBINE GENERATORS (NORMAL OPERATION)	190	MW	Nitrogen Oxides (NOx)	DRY LOW NOX BURNERS (LNB), SELECTIVE CATALYTIC REDUCTION (SCR)	2.5	PPMVD	@15% O2, 1-HR AVG
CA-1209	HIGH DESERT POWER PROJECT	03/11/2010 ACT	COMBUSTION TURBINE GENERATOR (STARTUP PERIODS)	190	MW	Nitrogen Oxides (NOx)	DRY LOW NOX BURNERS (LNB), SELECTIVE CATALYTIC REDUCTION (SCR)	3541	LB/COLD STARTUP	COLD STARTUP PERIODS
CA-1209	HIGH DESERT POWER PROJECT	03/11/2010 ACT	COMBUSTION TURBINE GENERATOR (SHUTDOWN PERIODS)	190	MW	Nitrogen Oxides (NOx)	DRY LOW NOX BURNERS (LNB), SELECTIVE CATALYTIC REDUCTION (SCR)	97	LB/SHUTDOWN	SHUTDOWN PERIODS
CA-1211	COLUSA GENERATING STATION	03/11/2011 ACT	COMBUSTION TURBINES (WARM STARTUP PERIODS)	172	MW	Nitrogen Oxides (NOx)	DRY LOW NOX BURNERS (LNB), SELECTIVE CATALYTIC REDUCTION (SCR)	249.9	LB/H	WARM STARTUP PERIODS
CA-1211	COLUSA GENERATING STATION	03/11/2011 ACT	COMBUSTION TURBINES (HOT STARTUP PERIODS)	172	MW	Nitrogen Oxides (NOx)	DRY LOW NOX BURNERS (LNB), SELECTIVE CATALYTIC REDUCTION (SCR)	152	LB/H	HOT STARTUP PERIODS
CA-1211	COLUSA GENERATING STATION	03/11/2011 ACT	COMBUSTION TURBINES (SHUTDOWN PERIODS)	172	MW	Nitrogen Oxides (NOx)	DRY LOW NOX BURNERS (LNB), SELECTIVE CATALYTIC REDUCTION (SCR)	115	LB/H	TURBINE SHUTDOWN PERIODS
CA-1211	COLUSA GENERATING STATION	03/11/2011 ACT	COMBUSTION TURBINES (NORMAL OPERATION)	172	MW	Nitrogen Oxides (NOx)	DRY LOW NOX BURNERS (LNB), SELECTIVE CATALYTIC REDUCTION (SCR)	2	PPMVD	@15% O2, 1-HR ROLLING AVG
CA-1211	COLUSA GENERATING STATION	03/11/2011 ACT	COMBUSTION TURBINES (COLD STARTUP PERIODS)	172	MW	Nitrogen Oxides (NOx)	DRY LOW NOX BURNERS (LNB), SELECTIVE CATALYTIC REDUCTION (SCR)	333.3	LB/H	COLD STARTUP PERIODS
CA-1212	PALMDALE HYBRID POWER PROJECT	10/18/2011 ACT	COMBUSTION TURBINES (NORMAL OPERATION)	154	MW	Nitrogen Oxides (NOx)	DRY LOW NOX (DLN) COMBUSTORS, SELECTIVE CATALYTIC REDUCTION (SCR)	2	PPMVD	@15% O2, 1-HR AVG
CA-1212	PALMDALE HYBRID POWER PROJECT	10/18/2011 ACT	COMBUSTION TURBINES (STARTUP PERIODS)	154	MW	Nitrogen Oxides (NOx)	DRY LOW NOX (DLN) COMBUSTORS, SELECTIVE CATALYTIC REDUCTION (SCR)	96	LB/EVENT	COLD STARTUP PERIODS
CA-1212	PALMDALE HYBRID POWER PROJECT	10/18/2011 ACT	COMBUSTION TURBINES (SHUTDOWN PERIODS)	110	MMBTU/H	Nitrogen Oxides (NOx)	DRY LOW NOX (DLN) COMBUSTORS, SELECTIVE CATALYTIC REDUCTION (SCR)	57	LB/EVENT	SHUTDOWN PERIODS
CO-0073	PUEBLO AIRPORT GENERATING STATION	07/22/2010 ACT	Three simple cycle combustion turbines	799.7	MMBTU/H	Nitrogen Oxides (NOx)	Good combustor design, Water Injection and Selective Catalytic Reduction (SCR)	5	PPMVD AT 15% O2	1-HR AVE
CO-0073	PUEBLO AIRPORT GENERATING STATION	07/22/2010 ACT	Four combined cycle combustion turbines	373	MMBTU/H	Nitrogen Oxides (NOx)	Dry Low NOx (DLN) Combustor and Selective Catalytic Reduction (SCR)	3	PPMVD AT 15% O2	1-HR AVE
CO-0076	PUEBLO AIRPORT GENERATING STATION	12/11/2014 ACT	Turbines - two simple cycle gas	799.7	MMBTU/H each	Nitrogen Oxides (NOx)	SCR and dry low NOx burners	23	LB/H	1-HR AVE / STARTUP AND SHUTDOWN
CO-0076	PUEBLO AIRPORT GENERATING STATION	12/11/2014 ACT	Four combined cycle combustion turbines	373	MMBTU/H each	Nitrogen Oxides (NOx)	SCR and dry low NOx burners	8	LB/H	4-HR ROLLING AVE / STARTUP AND SHUTDOWN
GA-0138	LIVE OAKS POWER PLANT	04/08/2010 ACT	COMBINED CYCLE COMBUSTION TURBINE - ELECTRIC GENERATING PLANT	600	MW	Nitrogen Oxides (NOx)	DRY LOW NOx BURNERS, SELECTIVE CATALYTIC REDUCTION	2.5	PPM@15%02	3 HOUR AVERAGE/CONDITION 2.11
IA-0107	MARSHALLTOWN GENERATING STATION	04/14/2014 ACT	Combustion turbine #1 - combined cycle	2258	mmBtu/hr	Nitrogen Oxides (NOx)	Low-NOx burners and SCR	2	PPM	30-DAY ROLLING AVG. @15% O2
IA-0107	MARSHALLTOWN GENERATING STATION	04/14/2014 ACT	Combustion turbine #2 -combined cycle	2258	mmBtu/hr	Nitrogen Oxides (NOx)	SCR, Low-NOx burner	2	PPM	30-DAY ROLLING AVERAGE
ID-0018	LANGLEY GULCH POWER PLANT	06/25/2010 ACT	COMBUSTION TURBINE, COMBINED CYCLE W/ DUCT BURNER	2375.28	MMBTU/H	Nitrogen Oxides (NOx)	SELECTIVE CATALYTIC REDUCTION (SCR), DRY LOW NOX (DLN), GOOD COMBUSTION PRACTICES (GCP)	2	PPMVD	3-HR ROLLING / 15% O2
IL-0129	CPV THREE RIVERS ENERGY CENTER	07/30/2018 ACT	Combined Cycle Combustion Turbines	3474	mmBtu/hr	Nitrogen Oxides (NOx)	Selective catalytic reduction (SCR) and low-NOx combustion technology (dry low-NOx co	2	PPMV @ 15% O2	3-UNIT OPERATING HOURS
*IL-0130	JACKSON ENERGY CENTER	12/31/2018 ACT	Combined-Cycle Combustion Turbine	3864	mmBtu/hr	Nitrogen Oxides (NOx)	Selective Catalytic Reduction (SCR) and low-NOx technology (dry low-NOx combustion te	2	PPMV	3-UNIT OPERATING HOURS @ 15% O2
IN-0158	ST. JOSEPH ENEGRY CENTER, LLC	12/03/2012 ACT	FOUR (4) NATURAL GAS COMBINED CYCLE COMBUSTION TURBINES	2300	MMBTU/H	Nitrogen Oxides (NOx)	SELECTIVE CATALYTIC REDUCTION AND DRY LOW NOX BURNERS	2	PPMVD	3 HOURS
IN-0158	ST. JOSEPH ENEGRY CENTER, LLC	12/03/2012 ACT	FOUR (4) NATURAL GAS COMBINED CYCLE COMBUSTION TURBINES - START UP/SHUT	2300	MMBTU/H	Nitrogen Oxides (NOx)		443	LB	EVENT*
LA-0257	SABINE PASS LNG TERMINAL	12/06/2011 ACT	Simple Cycle Refrigeration Compressor Turbines (16)	286	MMBTU/H	Nitrogen Oxides (NOx)	water injection	22.94	LB/H	HOURLY MAXIMUM
LA-0257	SABINE PASS LNG TERMINAL	12/06/2011 ACT	Combined Cycle Refrigeration Compressor Turbines (8)	286	MMBTU/H	Nitrogen Oxides (NOx)	water injection	22.94	LB/H	HOURLY MAXIMUM
LA-0257	SABINE PASS LNG TERMINAL	12/06/2011 ACT	Simple Cycle Generation Turbines (2)	286	MMBTU/H	Nitrogen Oxides (NOx)	water injection	28.68	LB/H	HOURLY MAXIMUM
LA-0308	MORGAN CITY POWER PLANT	09/26/2013 ACT	Combustion Turbine with SCR/HRSG	607.1	MMBTU/hr	Nitrogen Oxides (NOx)	Selective Catalytic Reduction (SCR) and Water/Steam Injection	11.89	LB/H	HOURLY MAXIMUM
LA-0331	CALCASIEU PASS LNG PROJECT	09/21/2018 ACT	Combined Cycle Combustion Turbines (CCCT1 to CCCT5)	921	MM BTU/h	Nitrogen Oxides (NOx)	Low NOx Burners, SCR, and Good Combustion Practices	2.5	PPMV	30 DAY ROLLING AVERAGE
LA-0331	CALCASIEU PASS LNG PROJECT	09/21/2018 ACT	Aeroderivative Simple Cycle Combustion Turbine	263	MM BTU/h	Nitrogen Oxides (NOx)	Selective Catalytic Reduction (SCR), exclusive combustion of fuel gas, and good combust	25	PPMV	30 DAY ROLLING AVERAGE
LA-0331	CALCASIEU PASS LNG PROJECT	09/21/2018 ACT	Simple Cycle Combustion Turbines (SCCT1 to SCCT3)	927	MM BTU/h	Nitrogen Oxides (NOx)	Dry Low NOx Combustor Design, Good Combustion Practices, and Natural Gas Combusti	9	PPMV	30 DAY ROLLING AVERAGE
MA-0039	SALEM HARBOR STATION REDEVELOPMENT	01/30/2014 ACT	Combustion Turbine with Duct Burner	2449	MMBTU/H	Nitrogen Oxides (NOx)	Dry Low NOx Combustors & Selective Catalytic Reduction	2	PPMVD @ 15% O2	1 HR BLOCK AVG/DO NOT APPLY DURING SS
MD-0041	CPV ST. CHARLES	04/23/2014 ACT	2 COMBINED-CYCLE COMBUSTION TURBINES	725	MEGAWATT	Nitrogen Oxides (NOx)	DRY LOW-NOX COMBUSTOR DESIGN AND SELECTIVE CATALYTIC REDUCTION (SCR)	2	PPMVD @ 15% O2	3-HOUR BLOCK AVERAGE, EXCLUDING SU/SD
*MD-0042	WILDCAT POINT GENERATION FACILITY	04/08/2014 ACT	2 COMBINED CYCLE COMBUSTION TURBINES, WITH DUCT FIRING	1000	MW	Nitrogen Oxides (NOx)	USE OF DRY LOW-NOX COMBUSTOR TURBINE DESIGN , USE OF PIPELINE QUALITY NATU	2	PPMVD @ 15% O2	3-HOUR BLOCK AVERAGE, EXCLUDING SU/SD
MD-0045	MATTAWOMAN ENERGY CENTER	11/13/2015 ACT	2 COMBINED-CYCLE COMBUSTION TURBINES - COLD STARTUP	286	MW	Nitrogen Oxides (NOx)	GOOD COMBUSTION PRACTICES, DRY LOW-NOX COMBUSTOR DESIGN AND SELECTIVE C	153	LB/EVENT	COLD STARTUP
MD-0045	MATTAWOMAN ENERGY CENTER	11/13/2015 ACT	2 COMBINED-CYCLE COMBUSTION TURBINES	286	MW	Nitrogen Oxides (NOx)	GOOD COMBUSTION PRACTICES, DRY LOW-NOX COMBUSTOR DESIGN AND SELECTIVE C	2	PPMVD @ 15% O2	3-HOUR BLOCK AVERAGE (EXCLUDING SU/SD)
MD-0045	MATTAWOMAN ENERGY CENTER	11/13/2015 ACT	2 COMBINED-CYCLE COMBUSTION TURBINES - WARM STARTUP	286	MW	Nitrogen Oxides (NOx)	GOOD COMBUSTION PRACTICES, DRY LOW-NOX COMBUSTOR DESIGN AND SELECTIVE C	132	LB/EVENT	WARM STARTUP
MD-0045	MATTAWOMAN ENERGY CENTER	11/13/2015 ACT	2 COMBINED-CYCLE COMBUSTION TURBINES - HOT STARTUP	286	MW	Nitrogen Oxides (NOx)	GOOD COMBUSTION PRACTICES, DRY LOW-NOX COMBUSTOR DESIGN AND SELECTIVE C	105	LB/EVENT	HOT STARTUP
MD-0045	MATTAWOMAN ENERGY CENTER	11/13/2015 ACT	2 COMBINED-CYCLE COMBUSTION TURBINES - SHUTDOWN	286	MW	Nitrogen Oxides (NOx)	DRY LOW-NOX COMBUSTOR DESIGN, GOOD COMBUSTION PRACTICES AND SELECTIVE C	23	LB/EVENT	SHUT DOWN
MD-0046	KEYS ENERGY CENTER	10/31/2014 ACT	2 COMBINED-CYCLE COMBUSTION TURBINES	235	MW	Nitrogen Oxides (NOx)	GOOD COMBUSTION PRACTICES, DRY LOW-NOX COMBUSTOR DESIGN AND SELECTIVE C	2	PPMVD @ 15% O2	3-HOUR BLOCK AVERAGE, EXCLUDING SU/SD
MD-0046	KEYS ENERGY CENTER	10/31/2014 ACT	2 COMBINED-CYCLE COMBUSTION TURBINES - COLD STARTUP	235	MW	Nitrogen Oxides (NOx)	GOOD COMBUSTION PRACTICES, DRY LOW-NOX COMBUSTOR DESIGN AND SELECTIVE C	245.2	LB/EVENT	COLD STARTUP
MD-0046	KEYS ENERGY CENTER	10/31/2014 ACT	2 COMBINED-CYCLE COMBUSTION TURBINES - WARM STARTUP	235	MW	Nitrogen Oxides (NOx)	GOOD COMBUSTION PRACTICES, DRY LOW-NOX COMBUSTOR DESIGN AND SELECTIVE C	82.9	LB/EVENT	WARM STARTUP
MD-0046	KEYS ENERGY CENTER	10/31/2014 ACT	2 COMBINED-CYCLE COMBUSTION TURBINES - HOT STARTUP	235	MW	Nitrogen Oxides (NOx)	GOOD COMBUSTION PRACTICES, DRY LOW-NOX COMBUSTOR DESIGN AND SELECTIVE C	71.4	LB/EVENT	HOT STARTUP
MD-0046	KEYS ENERGY CENTER	10/31/2014 ACT	2 COMBINED-CYCLE COMBUSTION TURBINES - SHUTDOWN	235	MW	Nitrogen Oxides (NOx)	DRY LOW-NOX COMBUSTOR DESIGN, GOOD COMBUSTION PRACTICES AND SELECTIVE C	60	LB/EVENT	SHUTDOWN
MI-0402	SUMPTER POWER PLANT	11/17/2011 ACT	Combined cycle combustion turbine w/ HRSG	130	MW electrical output	Nitrogen Oxides (NOx)	Low NOx burners	9	PPM	24-HR ROLLING AVERAGE
MI-0405	MIDLAND COGENERATION VENTURE	04/23/2013 ACT	Natural gas fueled combined cycle combustion turbine generators (CTG) with HRSG	2237	MMBTU/H	Nitrogen Oxides (NOx)	Dry low NOx (DLN) burner and selective catalytic reduction (SCR) system.	2	PPM	EACH CTG; 24-H ROLLING AVG.
MI-0405	MIDLAND COGENERATION VENTURE	04/23/2013 ACT	Natural gas fueled combined cycle combustion turbine generators (CTG) with HRSG a	2486	MMBTU/H	Nitrogen Oxides (NOx)	Dry low NOx (DLN) burners and selective catalytic reduction (SCR) system.	2	PPM	24-H ROLLING AVG
MI-0405	MIDLAND COGENERATION VENTURE	04/23/2013 ACT	Natural gas fueled combined cycle combustion turbine generators (CTG) with HRSG--S	2237	MMBTU/H each	Nitrogen Oxides (NOx)	Dry low NOx (DLN) burner and selective catalytic reduction (SCR)	185.7	LB/H	HOURLY DURING STARTUP
MI-0406	RENAISSANCE POWER LLC	11/01/2013 ACT	FG-CTG1-4 Natural gas fueled combined cycle combustion turbine generators (CTG)	2147	MMBTU/H	Nitrogen Oxides (NOx)	Dry Low NOx burners (DLN) and Selective Catalytic Reduction (SCR) system.	2	PPMVOL	3-H ROLL AVG., EXCEPT STARTUP/SHUTDOWN
MI-0406	RENAISSANCE POWER LLC	11/01/2013 ACT	FG-CTG/DB1-4 Natural gas fueled combined cycle combustion turbine generators; du	2807	MMBTU/H	Nitrogen Oxides (NOx)	Dry low NOx burner (DLN) and selective catalytic reduction system (SCR).	2	PPMVOL	3-H ROLL AVG., EXCEPT STARTUP/SHUTDOWN
MI-0410	THETFORD GENERATING STATION	07/25/2013 ACT	FG-PEAKERS: 2 natural gas fired simple cycle combustion turbines	171	MMBTU/H	Nitrogen Oxides (NOx)	Dry low-NOx combustors	0.09	LB/MMBTU	TEST PROTOCOL WILL SPECIFY AVG. TIME.
MI-0432	NEWCOVERT GENERATING FACILITY	07/30/2018 ACT	FG-TURB/DB1-3 (3 combined cycle combustion turbine and heat recovery steam gene	1230	MW	Nitrogen Oxides (NOx)	Good combustion practices, DLN burners and SCR.	2	PPMVD	AT 15%O2; EACH INDIV. CT/HRSG TRAIN
MI-0433	MEC NORTH, LLC AND MEC SOUTH LLC	06/29/2018 ACT	EUCTGHRSG (South Plant): A combined cycle natural gas-fired combustion turbine ge	500	MW	Nitrogen Oxides (NOx)	SCR with DLNB (Selective catalytic reduction with dry low NOx burners).	2	PPMV	AT 15%O2; 24-HR ROLL AVG NOT S.S.
MI-0433	MEC NORTH, LLC AND MEC SOUTH LLC	06/29/2018 ACT	EUCTGHRSG (North Plant): A combined cycle natural gas-fired combustion turbine ge	500	MW	Nitrogen Oxides (NOx)	SCR with DLNB (Selective catalytic reduction with Dry Low NOx burners).	2	PPMVD	AT 15%O2; 24-H ROLL AVG; NOT S.S.
*MI-0441	LBWL-ERICKSON STATION	12/21/2018 ACT	EUCTGHRSG1--A 667 MMBTU/H NG fired combustion turbine generator coupled with	667	MMBTU/H	Nitrogen Oxides (NOx)	Dry low NOx burners and selective catalytic reduction for NOx control.	3	PPM	PPMVD@15%O2; 24-H ROLL AVG; SEE NOTES
NJ-0079	WOODBRIDGE ENERGY CENTER	07/25/2012 ACT	Combined Cycle Combustion Turbine with Duct Burner	40297.6	mmcubic ft/year	Nitrogen Oxides (NOx)	Low NOx burners and Selective Catalytic Reduction System	19.8	LB/H	AVERAGE OF THREE 1- HOUR TESTS
NJ-0079	WOODBRIDGE ENERGY CENTER	07/25/2012 ACT	Combined Cycle Combustion Turbine w/o duct burner	40297.6	mmcubic ft/year	Nitrogen Oxides (NOx)	DLN combustion system with SCR on each of the two combustion turbines and use of or	2	PPMVD	3-HR ROLLING AVE BASED ON 1-HR BLOCK
NJ-0080	HESS NEWARK ENERGY CENTER	11/01/2012 ACT	Combined cylce turbine with duct burner	39463	mmcubic ft/year*	Nitrogen Oxides (NOx)	Selelctive catalytic reduction (SCR) system	2	PPMVD	3-HR ROLLING AVERAGE BASED ON 1-HR BLOCK
NJ-0080	HESS NEWARK ENERGY CENTER	11/01/2012 ACT	Combined Cycle Combustion Turbine	39463	MMCubic ft/yr	Nitrogen Oxides (NOx)	Selective Catalytic Reduction (SCR) System and use of natural gas a clean burning fuel	0.75	LB/H	AVERAGE OF THREE TESTS
NJ-0081	PSEG FOSSIL LLC SEWAREN GENERATING STATION	03/07/2014 ACT	Combined Cycle Combustion Turbine -Siemens turbine without Duct Burner	33691	MMCF/YR	Nitrogen Oxides (NOx)	Selective Catalytic Reduction and Dry Low NOx	2	PPMVD@ 15% O2	3-HR ROLLING AVE BASED ON 1-HR BLOCK
NJ-0081	PSEG FOSSIL LLC SEWAREN GENERATING STATION	03/07/2014 ACT	COMBINED CYCLE COMBUSTION TURBINE WITH DUCT BURNER - SIEMENS	33691	MMCF/YR	Nitrogen Oxides (NOx)	Selective Catalytic Reduction System (SCR)	2	PPMVD	3-HR ROLLING AVE BASED ON 1-HR BLOCK AVE
NJ-0081	PSEG FOSSIL LLC SEWAREN GENERATING STATION	03/07/2014 ACT	COMBINED CYCLE COMBUSTION TURBINE WITH DUCT BURNER - GENERAL ELECTRIC	33691	MMCF/YR	Nitrogen Oxides (NOx)	Selective Catalytic Reduction Systems(SCR) and Dry Low NOx	2	PPMVD@15%O2	3-HR BLOCK AVERAGE BASED ON 1-HR BLOCK
NJ-0081	PSEG FOSSIL LLC SEWAREN GENERATING STATION	03/07/2014 ACT	COMBINED CYCLE COMBUSTION TURBINE WITHOUT DUCT BURNER - GENERAL ELECT	33691	MMCF/YR	Nitrogen Oxides (NOx)	Selective Catalytic Reduction System (SCR) and Dry Low NOx	2	PPMVD@15%O2	3-HR ROLLING AVERAE BASED ON 1-HR BLOCK
NJ-0082	WEST DEPTFORD ENERGY STATION	07/18/2014 ACT	Combined Cycle Combustion Turbine without Duct Burner	20282	MMCF/YR	Nitrogen Oxides (NOx)	Selective Catalytic Reduction System (SCR) and use of natural gas a clean burning fuel	2	PPMVD@15%O2	3-HR ROLLING AVE BASED ON 1-HR BLOCK
NJ-0082	WEST DEPTFORD ENERGY STATION	07/18/2014 ACT	Combined Cycle Combustion Turbine with Duct Burner	20282	MMCF/YR	Nitrogen Oxides (NOx)	Selective Catalytic reduction (SCR) and use of natural gas a clean burning fuel	23	LB/H	3-HR ROLLING AVE BASED ON 1-HR BLOCK
NJ-0085	MIDDLESEX ENERGY CENTER, LLC	07/19/2016 ACT	Combined Cycle Combustion Turbine firing Natural Gas with Duct Burner	4000	h/yr	Nitrogen Oxides (NOx)	SELECTIVE CATALYTIC REDUCTION AND DRY LOW NOX	2	PPMVD@15%O2	3 H ROLLING AV BASED ON ONE H BLOCK AV
NJ-0085	MIDDLESEX ENERGY CENTER, LLC	07/19/2016 ACT	Combined Cycle Combustion Turbine firing Natural Gas without Duct Burner	8040	H/YR	Nitrogen Oxides (NOx)	Selective Catalytic Reduction System and Dry Low NOx	2	PPMVD@15%O2	3 H ROLLING AV BASED ON ONE H BLOCK AV
NJ-0085	MIDDLESEX ENERGY CENTER, LLC	07/19/2016 ACT	COMBINED CYCLE COMBUSTION TURBINE FIRING ULTRA LOW SULFUR DISTILLATE OIL	720	H/YR	Nitrogen Oxides (NOx)	Selective catalytic Reduction Systems and Dry Low NOx	4	PPMVD@15% O2	3 H ROLLING AV BASED ON ONE H BLOCK AV

NY-0104	CPV VALLEY ENERGY CENTER	08/01/2013 ACT	Turbines - diesel fuel	0		Nitrogen Oxides (NOx)	Water injection and selective catalytic reduction.	6	PPMVD @ 15% O2	1 H	
NY-0104	CPV VALLEY ENERGY CENTER	08/01/2013 ACT	Turbines and duct burners - NG	0		Nitrogen Oxides (NOx)	Dry low NOx combustion technology and selective catalytic reduction.	2	PPMVD @ 15% O2	1 H	
OH-0352	OREGON CLEAN ENERGY CENTER	06/18/2013 ACT	2 Combined Cycle Combustion Turbines-Siemens, without duct burners	515600	MMSCF/rolling 12-months	Nitrogen Oxides (NOx)	selective catalytic reduction (SCR); dry low NOx combustors; lean fuel technology	22	LB/H		
OH-0352	OREGON CLEAN ENERGY CENTER	06/18/2013 ACT	2 Combined Cycle Combustion Turbines-Siemens, with duct burners	51560	MMSCF/rolling 12-MO	Nitrogen Oxides (NOx)	selective catalytic reduction (SCR); dry low NOx combustors; lean fuel technology	21	LB/H		
OH-0352	OREGON CLEAN ENERGY CENTER	06/18/2013 ACT	2 Combined Cycle Combustion Turbines-Mitsubishi, without duct burners	47917	MMSCF/rolling 12-MO	Nitrogen Oxides (NOx)	selective catalytic reduction (SCR); dry low NOx combustors; lean fuel technology	22.6	LB/H		
OH-0352	OREGON CLEAN ENERGY CENTER	06/18/2013 ACT	2 Combined Cycle Combustion Turbines-Mitsubishi, with duct burners	47917	MMSCF/rolling 12-MO	Nitrogen Oxides (NOx)	selective catalytic reduction (SCR); dry low NOx combustors; lean fuel technology	20.8	LB/H		
OH-0356	DUKE ENERGY HANGING ROCK ENERGY	12/18/2012 ACT	Turbines (4) (model GE 7FA) Duct Burners Off	172	MW	Nitrogen Oxides (NOx)	Dry Low NOx burners and Selective Catalytic Reduction	21.1	LB/H		
OH-0356	DUKE ENERGY HANGING ROCK ENERGY	12/18/2012 ACT	Turbines (4) (model GE 7FA) Duct Burners On	172	MW	Nitrogen Oxides (NOx)	Dry Low NOx burners and Selective Catalytic Reduction	27.6	LB/H		
OH-0360	CARROLL COUNTY ENERGY	11/05/2013 ACT	Combined Cycle Combustion Turbines (two, identical) (P001 and P002)	2045	MMBTU/H	Nitrogen Oxides (NOx)	selective catalytic reduction (SCR) and dry low NOx combustors	20.5	LB/H		WITH DUCT BURNER. SEE NOTES.
OH-0363	NTE OHIO, LLC	11/05/2014 ACT	Turbine generator with HRSG and duct burners (P001)	3278.5	MMBTU/H	Nitrogen Oxides (NOx)	Use of natural gas, low NOx burner, and selective catalytic reduction (SCR).	27.7	LB/H		WITH DUCT BURNER. SEE NOTES.
OH-0365	ROLLING HILLS GENERATING, LLC	05/20/2015 ACT	Combustion Turbines, Scenario 1 (4, identical) (P001, P002, P004, P005)	2022	MMBTU/H	Nitrogen Oxides (NOx)	dry-low NOx (DLN) burner and selective catalytic reduction (SCR)	14.7	LB/H		WITHOUT DUCT BURNERS. SEE NOTES.
OH-0365	ROLLING HILLS GENERATING, LLC	05/20/2015 ACT	Combustion Turbines, Scenario 2 (4, identical) (P001, P002, P004, P005)	2144	MMBTU/H	Nitrogen Oxides (NOx)	dry-low NOx (DLN) burner and selective catalytic reduction (SCR)	15.6	LB/H		WITHOUT DUCT BURNERS. SEE NOTES.
OH-0366	CLEAN ENERGY FUTURE - LORDSTOWN, LLC	08/25/2015 ACT	Combined Cycle Combustion Turbines (two, identical) (P001 and P002)	2725	MMBTU/H	Nitrogen Oxides (NOx)	dry low NOx combustors, selective catalytic reduction (SCR)	23.5	LB/H		WITH DUCT BURNER. SEE NOTES.
OH-0367	SOUTH FIELD ENERGY LLC	09/23/2016 ACT	Combined Cycle Combustion Turbines (two, identical) (P001 and P002)	3131	MMBTU/H	Nitrogen Oxides (NOx)	Dry low NOx (DLN) burners for natural gas firing, wet injection when firing ultra low sulfu	30.51	LB/H		WITH DUCT BURNER. SEE NOTES.
OH-0370	TRUMBULL ENERGY CENTER	09/07/2017 ACT	Combined Cycle Combustion Turbines (two, identical) (P001 and P002)	3025	MMBTU/H	Nitrogen Oxides (NOx)	dry low NOx combustors (DLN) and selective catalytic reduction (SCR)	25.3	LB/H		WITH DUCT BURNER. SEE NOTES.
OH-0372	OREGON ENERGY CENTER	09/27/2017 ACT	Combined Cycle Combustion Turbines (two, identical) (P001 and P002)	3055	MMBTU/H	Nitrogen Oxides (NOx)	Dry low NOX combustors and selective catalytic reduction (SCR)	25.3	LB/H		WITH DUCT BURNER. SEE NOTES.
OH-0374	GUERNSEY POWER STATION LLC	10/23/2017 ACT	Combined Cycle Combustion Turbines (3, identical) (P001 to P003)	3516	MMBTU/H	Nitrogen Oxides (NOx)	dry low NOx burners and SCR	33.85	LB/H		WITH DUCT BURNER. SEE NOTES.
OH-0375	LONG RIDGE ENERGY GENERATION LLC - HANNIBAL POWER	11/07/2017 ACT	General Electric Combustion Turbine (P004)	3544	MMBTU/H	Nitrogen Oxides (NOx)	dry low NOx burners and an SCR system	26.1	LB/H		EXCEPT STARTUP AND SHUTDOWN. SEE NOTES
OH-0375	LONG RIDGE ENERGY GENERATION LLC - HANNIBAL POWER	11/07/2017 ACT	Mitsubishi Combustion Turbine (P005)	3320	MMBTU/H	Nitrogen Oxides (NOx)	dry low NOx burners and an SCR system	25.1	LB/H		WITH DUCT BURNER. SEE NOTES.
OH-0375	LONG RIDGE ENERGY GENERATION LLC - HANNIBAL POWER	11/07/2017 ACT	Siemens Combustion Turbine (P006)	3602	MMBTU/H	Nitrogen Oxides (NOx)	dry low NOx burners and an SCR system	27.1	LB/H		WITH DUCT BURNER. SEE NOTES.
OH-0377	HARRISON POWER	04/19/2018 ACT	General Electric (GE) Combustion Turbines (P005 & P006)	3459.6	MMBTU/H	Nitrogen Oxides (NOx)	dry low NOx burners and an SCR system	29.5	LB/H		WITH DUCT BURNER. SEE NOTES.
OH-0377	HARRISON POWER	04/19/2018 ACT	Mitsubishi Hitachi Power Systems (MHPS) Combustion Turbines (P007 & P008)	3231	MMBTU/H	Nitrogen Oxides (NOx)	dry low NOx burners and an SCR system	28	LB/H		WITH DUCT BURNER. SEE NOTES.
OK-0154	MOORELAND GENERATING STA	07/02/2013 ACT	Combustion Turbine	360	MW	Nitrogen Oxides (NOx)	Dry Low-NOx burners with SCR.	2	PPMVD@15% O2	ONE-HR	
OK-0154	MOORELAND GENERATING STA	07/02/2013 ACT	COMBUSTION TURBINE	360	MW	Nitrogen Oxides (NOx)	DRY LOW-NOx BURNER WITH SCR.	2	PPMVD@15% O2	ONE-HR	
OK-0169	PSO COMANCHE POWER STATION	10/08/2015 ACT	COMBINED CYCLE COMBUSTION TURBINE	1250	MMBTUH	Nitrogen Oxides (NOx)	Use of Dry Low NOx Burners	0.15	LB/MMBTU	30-DAY ROLLING AVG	
OR-0050	TROUTDALE ENERGY CENTER, LLC	03/05/2014 ACT	Mitsubishi M501-GAC combustion turbine, combined cycle configuration with duct bu	2988	MMBTU/H	Nitrogen Oxides (NOx)	Utilize dry low-NOx burners when combusting natural gas; Utilize water injection when combusting ULSD; Utilize selective catalytic reduction (SCR) with aqueous ammonia injection at all times except during startup and shutdown; Limit the time in startup or shutdown.	2	PPMDV AT 15% O2	3-HR ROLLING AVERAGE ON NG	
OR-0050	TROUTDALE ENERGY CENTER, LLC	03/05/2014 ACT	GE LM5-100 combustion turbines, simple cycle with water injection	1690	MMBTU/H	Nitrogen Oxides (NOx)	Utilize water injection when combusting natural gas or ULSD; Utilize selective catalytic reduction (SCR) with aqueous ammonia injection at all times except during startup and shutdown; Limit the time in startup or shutdown.	2.5	PPMDV AT 15% O2	3-HR ROLLING AVERAGE ON NG	
PA-0278	MOXIE LIBERTY LLC/ASYLUM POWER PLT	10/10/2012 ACT	Combined-cycle Turbines (2) - Natural gas fired	3277	MMBTU/H	Nitrogen Oxides (NOx)	Dry low-NOx (DLN) combustor and selective catalytic reduction (SCR)	2	PPMVD		
PA-0288	SUNBURY GENERATION LP/SUNBURY SES	04/01/2013 ACT	Combined Cycle Combustion Turbine AND DUCT BURNER (3)	2538000	MMBTU/H	Nitrogen Oxides (NOx)	SCR	2	PPM	CORRECTED TO 15% OXYGEN	
PA-0296	BERKS HOLLOW ENERGY ASSOC LLC/ONTELAUNEE	12/17/2013 ACT	Turbine, Combined Cycle, #1 and #2	3046	MMBTU/H	Nitrogen Oxides (NOx)	SCR	131.6	TPY	12-MONTH ROLLING TOTAL	
*PA-0298	FUTURE POWER PA/GOOD SPRINGS NGCC FACILITY	03/04/2014 ACT	Turbine, COMBINED CYCLE UNIT (Siemens 5000)	2267	MMBTU/H	Nitrogen Oxides (NOx)	SCR	2	PPMVD	@ 15% OXYGEN	
PA-0306	TENASKA PA PARTNERS/WESTMORELAND GEN FAC	02/12/2016 ACT	Large combustion turbine	0		Nitrogen Oxides (NOx)	SCR, DLN, and good combustion practice	2	PPMVD@15% O2		
PA-0307	YORK ENERGY CENTER BLOCK 2 ELECTRICITY GENERATION PROJECT	06/15/2015 ACT	Two combined cycle combustion turbines ULSD fired with duct burner NG fired	0		Nitrogen Oxides (NOx)	SCR and good combustion practices with ULSD fuels	6	PPMDV @ 15% O2		
PA-0307	YORK ENERGY CENTER BLOCK 2 ELECTRICITY GENERATION PROJECT	06/15/2015 ACT	Two Combine Cycle Combustion Turbine with Duct Burner	3001.57	MCF/hr	Nitrogen Oxides (NOx)	SCR, Dry Lo-NOx combustor, good combustion practices and low sulfur fuels	2	PPVDM @ 15 O2		
PA-0309	LACKAWANNA ENERGY CTR/JESSUP	12/23/2015 ACT	Combustion turbine with duct burner	3304.3	MMBtu/hr	Nitrogen Oxides (NOx)	Dry low-NOx burners, SCR, exclusive natural gas	2	PPMDV @15% O2		
PA-0310	CPV FAIRVIEW ENERGY CENTER	09/02/2016 ACT	Combustion turbine and HRSG with duct burner NG only	3338	MMBtu/hr	Nitrogen Oxides (NOx)	Dry Low NOx combustion technology, SCR at all steady state operating loads, good com	2	PPMDV @ 15% O2		
PA-0310	CPV FAIRVIEW ENERGY CENTER	09/02/2016 ACT	Combustion turbine and HRSG without duct burner ULSD	0		Nitrogen Oxides (NOx)	Water/steam injection, SCR, good combustion practices	6	PPMDV @ 15% O2		
PA-0310	CPV FAIRVIEW ENERGY CENTER	09/02/2016 ACT	Combustion turbine and HRSG with duct burner - firing NG blend with ethane	0		Nitrogen Oxides (NOx)		0			
PA-0310	CPV FAIRVIEW ENERGY CENTER	09/02/2016 ACT	Combustion turbine and HRSG without duct burner - firing NG blend with ethane	0		Nitrogen Oxides (NOx)		0			
PA-0311	MOXIE FREEDOM GENERATION PLANT	09/01/2015 ACT	Combustion Turbine With Duct Burner	3727	MMBtu/hr	Nitrogen Oxides (NOx)	DLN burner, SCR, good engineering practice	2	PPMDV @ 15% O2		
PA-0311	MOXIE FREEDOM GENERATION PLANT	09/01/2015 ACT	Combustion Turbine without Duct Burner	0		Nitrogen Oxides (NOx)	DLN burners, SCR, good engineering practice	2	PPMDV @15% O2		
*PA-0315	HILLTOP ENERGY CENTER, LLC	04/12/2017 ACT	Combustion Turbine without Duct Burner	3509	MMBtu/hr	Nitrogen Oxides (NOx)		2	PPMDV	CORRECTED TO 15% O2	
*PA-0316	RENOVO ENERGY CENTER, LLC	01/26/2018 ACT	Combustion Turbine Firing NG	0		Nitrogen Oxides (NOx)	SCR	2	PPMDV	CORRECTED TO 15% O2	
*PA-0316	RENOVO ENERGY CENTER, LLC	01/26/2018 ACT	Cobustion Turbine firing ULSD	0		Nitrogen Oxides (NOx)	SCR	4	PPMDV	CORRECTED TO 15% O2	
*PA-0319	RENAISSANCE ENERGY CENTER	08/27/2018 ACT	COMBUSTION TURBINE UNIT w/o DUCT BURNERS UNIT	2665.9	MMBtu/hr	Nitrogen Oxides (NOx)	SCR	2	PPMDV	@15% O2	
TN-0162	JOHNSONVILLE COGENERATION	04/19/2016 ACT	Natural Gas-Fired Combustion Turbine with HRSG	1339	MMBtu/hr	Nitrogen Oxides (NOx)	Good combustion design and practices, selective catalytic reduction (SCR)	2	PPMVD @ 15% O2	30 UNIT-OPERATING-DAY MOVING AVERAGE	
TX-0590	KING POWER STATION	08/05/2010 ACT	Turbine	1350	MW	Nitrogen Oxides (NOx)	DLN burners and SCR	2	PPMVD AT 15% O2	1-HOUR AVERAGE	
TX-0600	THOMAS C. FERGUSON POWER PLANT	09/01/2011 ACT	Natural gas-fired turbines	390	MW	Nitrogen Oxides (NOx)	Dry low NOx burners and Selective Catalytic Reduction	2	PPMVD	ROLLING 24-HR AT 15%OXYGEN	
TX-0618	CHANNEL ENERGY CENTER LLC	10/15/2012 ACT	Combined Cycle Turbine	180	MW	Nitrogen Oxides (NOx)	Selective catalytic reduction	2	PPMVD	@15% O2 ON A 3-HR ROLLING AVG	
TX-0619	DEER PARK ENERGY CENTER	09/26/2012 ACT	Combined Cycle Turbine	180	MW	Nitrogen Oxides (NOx)	Selective Catalytic Reduction	2	PPMVD	@15% O2, 3-HR ROLLING AVG	
TX-0620	ES JOSLIN POWER PLANT	09/12/2012 ACT	Combined cycle gas turbine	195	MW	Nitrogen Oxides (NOx)	Selective catalytic reduction	2	PPMVD	@15% O2, 24-HR ROLLING AVG	
TX-0641	PINECREST ENERGY CENTER	11/12/2013 ACT	combined cycle turbine	700	MW	Nitrogen Oxides (NOx)	selective catalytic reduction	2	PPMVD	24-HR ROLLING AVG, 15%OXYGEN	
*TX-0660	FGE TEXAS POWER I AND FGE TEXAS POWER II	03/24/2014 ACT	Alstom Turbine	230.7	MW	Nitrogen Oxides (NOx)	Selective catalytic reduction	2	PPMVD	CORRECTED TO 15% O2, ROLLING 24 HR AVE	
TX-0672	CORPUS CHRISTI LIQUEFACTION PLANT	09/12/2014 ACT	Refrigeration compressor turbines	40000	hp	Nitrogen Oxides (NOx)	Dry low emission combustors	25	PPMVD	@ 15% O2, 4 HOUR ROLLING AVG	
TX-0672	CORPUS CHRISTI LIQUEFACTION PLANT	09/12/2014 ACT	Refrigeration compressor turbines	40000	hp	Nitrogen Oxides (NOx)	dry low emission combustors	25	PPMVD	@15% O2, 4 HOUR ROLLING AVERAGE	
TX-0678	FREEPORT LNG PRETREATMENT FACILITY	07/16/2014 ACT	Combustion Turbine	87	MW	Nitrogen Oxides (NOx)	Selective Catalytic Reduction	2	PPMVD	15@ O2, 3 HOUR ROLLING AVERAGE	
TX-0689	CEDAR BAYOU ELECTRIC GENERATION STATION	08/29/2014 ACT	Combined cycle natural gas turbines	225	MW	Nitrogen Oxides (NOx)	DLN, SCR	2	PPM	24HR ROLLING AVG.	
TX-0698	BAYPORT COMPLEX	09/05/2013 ACT	(4) cogeneration turbines	90	MW	Nitrogen Oxides (NOx)	DLN and Closed Loop Emissions Controls (CLEC)	5	PPMVD	@15% O2, 3-HR ROLLING AVERAGE	
TX-0708	LA PALOMA ENERGY CENTER	02/07/2013 ACT	(2) combined cycle turbines	650	MW	Nitrogen Oxides (NOx)	Selective Catalytic Reduction	2	PPMVD	@15% O2, 24-HR ROLLING AVERAGE	
TX-0709	SAND HILL ENERGY CENTER	09/13/2013 ACT	Natural gas-fired combined cycle turbines	173.9	MW	Nitrogen Oxides (NOx)	SCR	2	PPM	24HR ROLLING AVG.	
TX-0710	VICTORIA POWER STATION	12/01/2014 ACT	combined cycle turbine	197	MW	Nitrogen Oxides (NOx)	Selective Catalytic Reduction	2	PPMVD	@15% O2, 24-HR ROLLING AVERAGE	
TX-0712	TRINIDAD GENERATING FACILITY	11/20/2014 ACT	combined cycle turbine	497	MW	Nitrogen Oxides (NOx)	Selective Catalytic Reduction	2	PPMVD	@15% O2, 24-HR ROLLING AVERAGE	
TX-0713	TENASKA BROWNSVILLE GENERATING STATION	04/29/2014 ACT	(2) combined cycle turbines	274	MW	Nitrogen Oxides (NOx)	Selective Catalytic Reduction	2	PPMVD	@15% O2, 24-HR ROLLING AVERAGE	
TX-0714	S R BERTRON ELECTRIC GENERATING STATION	12/19/2014 ACT	(2) combined cycle turbines	240	MW	Nitrogen Oxides (NOx)	Selective Catalytic Reduction	2	PPMVD	@15% O2, 24-HR ROLLING AVERAGE	
TX-0730	COLORADO BEND ENERGY CENTER	04/01/2015 ACT	Combined-cycle gas turbine electric generating facility	1100	MW	Nitrogen Oxides (NOx)	SCR and oxidation catalyst	2	PPMVD @ 15% O2	24-HR AVERAGE	
TX-0751	EAGLE MOUNTAIN STEAM ELECTRIC STATION	06/18/2015 ACT	Combined Cycle Turbines (>25 MW) â€" natural gas	210	MW	Nitrogen Oxides (NOx)	Selective Catalytic Reduction	2	PPM	ROLLING 24-HR AVERAGE	
TX-0767	LON C. HILL POWER STATION	10/02/2015 ACT	Combined Cycle Turbines (>25 MW)	195	MW	Nitrogen Oxides (NOx)	Selective Catalytic Reduction	2	PPM	ROLLING 24-HR AVERAGE	
TX-0773	FGE EAGLE PINES PROJECT	11/04/2015 ACT	Combined Cycle Turbines (>25 MW)	321	MW	Nitrogen Oxides (NOx)	Selective Catalytic Reduction	2	PPM	24-HR AVERAGE	
TX-0788	NECHES STATION	03/24/2016 ACT	Large Combustion Turbines > 25 MW	232	MW	Nitrogen Oxides (NOx)	Dry low-NOx burners (DLN), good combustion practices	9	PPM		
TX-0790	PORT ARTHUR LNG EXPORT TERMINAL	02/17/2016 ACT	Refrigeration Compression Turbines	10	M TONNES/YR	Nitrogen Oxides (NOx)	Dry low NOx burners and good combustion practices	9	PPM	ROLLING 24-HR AVERAGE	
TX-0790	PORT ARTHUR LNG EXPORT TERMINAL	02/17/2016 ACT	Simple Cycle Electrical Generation Gas Turbines 15.210	34	MW	Nitrogen Oxides (NOx)	SELECTIVE CATALYTIC REDUCTION	5	PPM	ROLLING 24-HR AVERAGE	
TX-0819	GAINES COUNTY POWER PLANT	04/28/2017 ACT	Simple Cycle Turbine	227.5	MW	Nitrogen Oxides (NOx)	Dry Low NOx burners (control), natural gas, good combustion practices, limited operatin	9	PPMV	15% O2 3-H AVG	
TX-0819	GAINES COUNTY POWER PLANT	04/28/2017 ACT	Combined Cycle Turbine with Heat Recovery Steam Generator, fired Duct Burners, an	426	MW	Nitrogen Oxides (NOx)	Selective Catalytic Reduction (SCR) and Dry Low NOx burners	2	PPMVD	15% O2 3-H AVG	
TX-0834	MONTGOMERY COUNTY POWER STATIOIN	03/30/2018 ACT	Combined Cycle Turbine	2635	MMBTU/HR/UNIT	Nitrogen Oxides (NOx)	SCR and Dry Low NOx burners	2	PPMVD	15%O2 1-HOUR AVERAGE	
TX-0834	MONTGOMERY COUNTY POWER STATIOIN	03/30/2018 ACT	COMBINED CYCLE TURBINE MSS REDUCED LOAD	0		Nitrogen Oxides (NOx)	minimizing duration of startup / shutdown events, engaging the pollution control equip	170	LB/H		
VA-0315	WARREN COUNTY POWER PLANT - DOMINION	12/17/2010 ACT	COMBINED CYCLE TURBINE & DUCT BURNER, 3	2996	MMBTU/H	Nitrogen Oxides (NOx)	Two-stage, lean pre-mix dry low-NOx combustor and a selective catalytic reduction (SCR	2	PPMVD@15%O2	ONE HOUR AVERAGE	
VA-0321	BRUNSWICK COUNTY POWER STATION	03/12/2013 ACT	COMBUSTION TURBINE GENERATORS, (3)	3442	MMBTU/H	Nitrogen Oxides (NOx)	Selective catalytic reduction and ultra low NOx burners.	2	PPMVD @ 15% O2	1 H AVG	
VA-0322	GREEN ENERGY PARTNERS/ STONEWALL, LLC	04/30/2013 ACT	Large combustion turbines (>25MW) CCT1 and CCT2	2.23	MMBTU/H	Nitrogen Oxides (NOx)	Selective Catalytic Reduction (SCR), with ammonia injection and dry low NOx combusion	0			
VA-0325	GREENSVILLE POWER STATION	06/17/2016 ACT	COMBUSTION TURBINE GENERATOR WITH DUCT-FIRED HEAT RECOVERY STEAM GEN	3227	MMBTU/HR	Nitrogen Oxides (NOx)	SCR	2	PPMVD	1 HR AVG	
VA-0328	C4GT, LLC	04/26/2018 ACT	GE Combustion Turbine - Option 1 - Normal Operation	34000	MMCF/YR	Nitrogen Oxides (NOx)	dry, low NOx burners and selective catalytic reduction	2	PPMVD @ 15% O2	1 H AV	
VA-0328	C4GT, LLC	04/26/2018 ACT	Siemens Combusion Turbine - Option 2 - Normal Operation	35000	MMCF/YR	Nitrogen Oxides (NOx)	DRY, LOW NOx BURNERS & SCR	2	PPMVD @ 15% O2	1 H AV	
VA-0328	C4GT, LLC	04/26/2018 ACT	GE Combustion Turbine - Tuning & Water Washing	34000	MMCF/YR	Nitrogen Oxides (NOx)	dry, low NOx burners and SCR	638	LB/TURBINE/CAL DAY	24 HR AV	
VA-0328	C4GT, LLC	04/26/2018 ACT	GE Combustion Turbine - Startup and Shutdown	34000	MMCF/YR	Nitrogen Oxides (NOx)	Dry, low NOx burners and SCR	273	LB/TURBINE/EVENT	COLD START 60 MIN OR LESS	
VA-0328	C4GT, LLC	04/26/2018 ACT	Siemens Combustion Turbine - Tuning & Water Washing	35000	MMCF/YR	Nitrogen Oxides (NOx)	dry, low NOx burners and SCR	564	LB/TURBINE CAL DAY	24 HR AV	
VA-0328	C4GT, LLC	04/26/2018 ACT	Siemens Combustion Turbine - Startup & Shutdown	35000	MMCF/YR	Nitrogen Oxides (NOx)	dry, low NOx burners and SCR	95	LB/TURBINE/EVENT	COLD START 55 MIN OR LESS	
WV-0025	MOUNDSVILLE COMBINED CYCLE POWER PLANT	11/21/2014 ACT	Combined Cycle Turbine/Duct Burner	2419.61	mmBtu/Hr	Nitrogen Oxides (NOx)	SCR & Dry Low-NOx Burners	15.2	LB/H		
*WV-0029	HARRISON COUNTY POWER PLANT	03/27/2018 ACT	GE 7HA.02 Turbine	3496.2	mmBtu/hr	Nitrogen Oxides (NOx)	Dry-Low NOx Burners, SCR	32.9	LB/HR	1-HOUR AVERAGE	
*WV-0032	BROOKE COUNTY POWER PLANT	09/18/2018 ACT	GE 7HA.01 Turbine	2737.7	mmBtu/hr	Nitrogen Oxides (NOx)	Dry-Low NOx Burners, SCR	23.2	LB/HR		
WY-0070	CHEYENNE PRAIRIE GENERATING STATION	08/28/2012 ACT	Simple Cycle Turbine (EP03)	40	MW	Nitrogen Oxides (NOx)	SCR	5	PPMV AT 15% O2	1-HOUR	
WY-0070	CHEYENNE PRAIRIE GENERATING STATION	08/28/2012 ACT	Combined Cycle Turbine (EP01)	40	MW	Nitrogen Oxides (NOx)	SCR	3	PPMV AT 15% O2	1-HOUR	
WY-0070	CHEYENNE PRAIRIE GENERATING STATION	08/28/2012 ACT	Combined Cycle Turbine (EP02)	40	MW	Nitrogen Oxides (NOx)	SCR	3	PPMV AT 15% O2	1-HOUR	
WY-0070	CHEYENNE PRAIRIE GENERATING STATION	08/28/2012 ACT	Simple Cycle Turbine (EP05)	40	MW	Nitrogen Oxides (NOx)	SCR	5	PPMV AT 15% O2	1-HOUR	

RBLC SUMMARY FOR COMBUSTION TURBINES - CO

RBLCID	FACILITY_NAME	PERMIT_ISSUANCE_DATE	PROCESS_NAME	THROUGHPUT	THROUGHPUT_UNIT	POLLUTANT	CONTROL_METHOD_DESCRIPTION	EMISSION_LIMIT_1	EMISSION_LIMIT_1_UNIT	EMISSION_LIMIT_1_AVG_TIME_CONDITION
CA-1191	VICTORVILLE 2 HYBRID POWER PROJECT	03/11/2010 ACT	COMBUSTION TURBINE #1 (COLD STARTUP PERIODS)	154	MW	Carbon Monoxide	OXIDATION CATALYST SYSTEM	224	LB/H	COLD STARTUP PERIODS
CA-1191	VICTORVILLE 2 HYBRID POWER PROJECT	03/11/2010 ACT	COMBUSTION TURBINE #1 (WARM & HOT STARTUP PERIODS)	154	MW	Carbon Monoxide	OXIDATION CATALYST SYSTEM	247	LB/H	WARM & HOT STARTUP PERIODS
CA-1191	VICTORVILLE 2 HYBRID POWER PROJECT	03/11/2010 ACT	COMBUSTION TURBINE #1 (SHUTDOWN PERIODS)	154	MW	Carbon Monoxide	OXIDATION CATALYST SYSTEM	674	LB/H	SHUTDOWN PERIODS
CA-1191	VICTORVILLE 2 HYBRID POWER PROJECT	03/11/2010 ACT	COMBUSTION TURBINE #2 (NORMAL OPERATION, NO DUCT BURNING)	154	MW	Carbon Monoxide	OXIDATION CATALYST SYSTEM	2	PPMVD	@15% O2, 1-HR AVG (NO DUCT BURNING)
CA-1191	VICTORVILLE 2 HYBRID POWER PROJECT	03/11/2010 ACT	COMBUSTION TURBINE #2 (COLD STARTUP PERIODS)	154	MW	Carbon Monoxide	OXIDATION CATALYST SYSTEM	224	LB/H	COLD STARTUP PERIODS
CA-1191	VICTORVILLE 2 HYBRID POWER PROJECT	03/11/2010 ACT	COMBUSTION TURBINE #2 (WARM & HOT STARTUP PERIODS)	154	MW	Carbon Monoxide	OXIDATION CATALYST SYSTEM	247	LB/H	WARM & HOW STARTUP PERIODS
CA-1191	VICTORVILLE 2 HYBRID POWER PROJECT	03/11/2010 ACT	COMBUSTION TURBINE #2 (SHUTDOWN PERIODS)	154	MW	Carbon Monoxide	OXIDATION CATALYST SYSTEM	674	LB/H	SHUTDOWN PERIODS
CA-1191	VICTORVILLE 2 HYBRID POWER PROJECT	03/11/2010 ACT	COMBUSTION TURBINE #2 (NORMAL OPERATION, WITH DUCT BURNING)	154	MW	Carbon Monoxide	OXIDATION CATALYST SYSTEM	3	PPMVD	@15% O2, 1-HR AVG (W/ DUCT BURNING)
CA-1191	VICTORVILLE 2 HYBRID POWER PROJECT	03/11/2010 ACT	COMBUSTION TURBINE #1 (NORMAL OPERATION, NO DUCT BURNING)	154	MW	Carbon Monoxide	OXIDATION CATALYST SYSTEM	2	PPMVD	@15% O2, 1-HR AVG (NO DUCT BURNING)
CA-1191	VICTORVILLE 2 HYBRID POWER PROJECT	03/11/2010 ACT	COMBUSTION TURBINE #1 (NORMAL OPERATION, WITH DUCT BURNING)	154	MW	Carbon Monoxide	OXIDATION CATALYST SYSTEM	3	PPMVD	@15% O2, 1-HR AVG (W/ DUCT BURNING)
CA-1192	AVENAL ENERGY PROJECT	06/21/2011 ACT	COMBUSTION TURBINE #1 (NORMAL OPERATION, NO DUCT BURNING)	180	MW	Carbon Monoxide	OXIDATION CATALYST SYSTEM	1.5	PPMVD	@15% O2, 1-HR AVG
CA-1192	AVENAL ENERGY PROJECT	06/21/2011 ACT	COMBUSTION TURBINE #1 (NORMAL OPERATION, WITH DUCT BURNING)	180	MW	Carbon Monoxide	OXIDATION CATALYST SYSTEM	2	PPMVD	@15% O2, 1-HR AVG
CA-1192	AVENAL ENERGY PROJECT	06/21/2011 ACT	COMBUSTION TURBINE #1 (STARTUP & SHUTDOWN PERIODS)	180	MW	Carbon Monoxide	OXIDATION CATALYST SYSTEM	1000	LB/H	EACH TURBINE & HRSG
CA-1192	AVENAL ENERGY PROJECT	06/21/2011 ACT	COMBUSTION TURBINE #2 (NORMAL OPERATION, NO DUCT BURNING)	180	MW	Carbon Monoxide	OXIDATION CATALYST SYSTEM	1.5	PPMVD	@15% O2, 1-HR AVG
CA-1192	AVENAL ENERGY PROJECT	06/21/2011 ACT	COMBUSTION TURBINE #2 (NORMAL OPERATION, WITH DUCT BURNING)	180	MW	Carbon Monoxide	OXIDATION CATALYST SYSTEM	2	PPMVD	@15% O2, 1-HR AVG (W/ DUCT FIRING)
CA-1192	AVENAL ENERGY PROJECT	06/21/2011 ACT	COMBUSTION TURBINE #2 (STARTUP & SHUTDOWN PERIODS)	180	MW	Carbon Monoxide	OXIDATION CATALYST SYSTEM	1000	LB/H	EACH TURBINE & HRSG
CA-1209	HIGH DESERT POWER PROJECT	03/11/2010 ACT	COMBUSTION TURBINE GENERATORS (NORMAL OPERATION)	190	MW	Carbon Monoxide	OXIDATION CATALYST SYSTEM	4	PPMVD	@15% O2, 24-HR AVG
CA-1209	HIGH DESERT POWER PROJECT	03/11/2010 ACT	COMBUSTION TURBINE GENERATOR (STARTUP PERIODS)	190	MW	Carbon Monoxide	OXIDATION CATALYST SYSTEM	189	LB/COLD STARTUP	COLD STARTUP PERIODS
CA-1209	HIGH DESERT POWER PROJECT	03/11/2010 ACT	COMBUSTION TURBINE GENERATOR (SHUTDOWN PERIODS)	190	MW	Carbon Monoxide	OXIDATION CATALYST SYSTEM	239	LB/SHUTDOWN	SHUTDOWN PERIODS
CA-1211	COLUSA GENERATING STATION	03/11/2011 ACT	COMBUSTION TURBINES (WARM STARTUP PERIODS)	172	MW	Carbon Monoxide	CATALYTIC OXIDATION SYSTEM	373.6	LB/H	WARM STARTUP PERIODS
CA-1211	COLUSA GENERATING STATION	03/11/2011 ACT	COMBUSTION TURBINES (HOT STARTUP PERIODS)	172	MW	Carbon Monoxide	CATALYTIC OXIDATION SYSTEM	370.3	LB/H	HOT STARTUP PERIODS
CA-1211	COLUSA GENERATING STATION	03/11/2011 ACT	COMBUSTION TURBINES (SHUTDOWN PERIODS)	172	MW	Carbon Monoxide	CATALYTIC OXIDATION SYSTEM	483.5	LB/H	TURBINE SHUTDOWN PERIODS
CA-1211	COLUSA GENERATING STATION	03/11/2011 ACT	COMBUSTION TURBINES (NORMAL OPERATION)	172	MW	Carbon Monoxide	CATALYTIC OXIDATION SYSTEM	3	PPMVD	@15% O2, 3-HR ROLLING AVG
CA-1211	COLUSA GENERATING STATION	03/11/2011 ACT	COMBUSTION TURBINES (COLD STARTUP PERIODS)	172	MW	Carbon Monoxide	CATALYTIC OXIDATION SYSTEM	429.6	LB/H	COLD STARTUP PERIODS
CA-1212	PALMDALE HYBRID POWER PROJECT	10/18/2011 ACT	COMBUSTION TURBINES (NORMAL OPERATION)	154	MW	Carbon Monoxide	OXIDATION CATALYST SYSTEM	1.5	PPMVD	@15% O2, 1-HR AVG (NO DUCT BURNING)
CA-1212	PALMDALE HYBRID POWER PROJECT	10/18/2011 ACT	COMBUSTION TURBINES (STARTUP PERIODS)	154	MW	Carbon Monoxide	CATALYST OXIDATION SYSTEM	410	LB/EVENT	COLD STARTUP PERIODS
CA-1212	PALMDALE HYBRID POWER PROJECT	10/18/2011 ACT	COMBUSTION TURBINES (SHUTDOWN PERIODS)	110	MMBTU/H	Carbon Monoxide	OXIDATION CATALYST SYSTEM	337	LB/EVENT	SHUTDOWN PERIODS
CO-0073	PUEBLO AIRPORT GENERATING STATION	07/22/2010 ACT	Three simple cycle combustion turbines	799.7	MMBTU/H	Carbon Monoxide	Good Combustion Control and Catalytic Oxidation (CatOx)	10	PPMVD AT 15% O2	1-HR AVE
CO-0073	PUEBLO AIRPORT GENERATING STATION	07/22/2010 ACT	Four combined cycle combustion turbines	373	MMBTU/H	Carbon Monoxide	Good combustion control and catalytic oxidation	4	PPMVD AT 15% O2	1-HR AVE
CO-0076	PUEBLO AIRPORT GENERATING STATION	12/11/2014 ACT	Turbines - two simple cycle gas	799.7	MMBTU/H each	Carbon Monoxide	Catalytic Oxidation.	55	LB/H	1-HR AVE / START-UP AND SHUTDOWN
CO-0076	PUEBLO AIRPORT GENERATING STATION	12/11/2014 ACT	Four combined cycle combustion turbines	373	MMBTU/H each	Carbon Monoxide	Catalytic Oxidation.	38	LB/H	4-HR ROLLING AVE / START-UP AND SHUTDOWN
GA-0138	LIVE OAKS POWER PLANT	04/08/2010 ACT	COMBINED CYCLE COMBUSTION TURBINE - ELECTRIC GENERATING PLANT	600	MW	Carbon Monoxide	GOOD COMBUSTION PRACTICES AND CATALYTIC OXIDATION	2	PPM@15%02	3 HOUR AVERAGE WO/D DUCT FIRING/CONDITIO
IA-0107	MARSHALLTOWN GENERATING STATION	04/14/2014 ACT	Combustion turbine #1 - combined cycle	2258	mmBtu/hr	Carbon Monoxide	catalytic oxidizer	2	PPM	30-DAY ROLLING AVG. @15% O2
IA-0107	MARSHALLTOWN GENERATING STATION	04/14/2014 ACT	Combustion turbine #2 -combined cycle	2258	mmBtu/hr	Carbon Monoxide	CO catalyst	2	PPM	30-DAY ROLLING AVERAGE
ID-0018	LANGLEY GULCH POWER PLANT	06/25/2010 ACT	COMBUSTION TURBINE, COMBINED CYCLE W/ DUCT BURNER	2375.28	MMBTU/H	Carbon Monoxide	CATALYTIC OXIDATION (CATOX),	2	PPMVD	3-HR ROLLING / 15% O2
IL-0129	CPV THREE RIVERS ENERGY CENTER	07/30/2018 ACT	Combined Cycle Combustion Turbines	3474	mmBtu/hr	Carbon Monoxide	Oxidation catalyst	2	PPMV @ 15 % O2	3 OPERATING-HOUR, ROLLED HOURLY, AVERAGE
*IL-0130	JACKSON ENERGY CENTER	12/31/2018 ACT	Combined-Cycle Combustion Turbine	3864	mmBtu/hr	Carbon Monoxide	Oxidation catalyst	2	PPMV	3 OPERATING HOUR AVERAGE @ 15% O2
IN-0158	ST. JOSEPH ENERGY CENTER, LLC	12/03/2012 ACT	FOUR (4) NATURAL GAS COMBINED CYCLE COMBUSTION TURBINES	2300	MMBTU/H	Carbon Monoxide	OXIDATION CATALYST	2	PPMVD	3 HOURS
IN-0158	ST. JOSEPH ENERGY CENTER, LLC	12/03/2012 ACT	FOUR (4) NATURAL GAS COMBINED CYCLE COMBUSTION TURBINES - START UP/SHUTDOWN CYCLE	2300	MMBTU/H	Carbon Monoxide		2125	LB	*EVENT
LA-0254	NINEMILE POINT ELECTRIC GENERATING PLANT	08/16/2011 ACT	COMBINED CYCLE TURBINE GENERATORS (UNITS 6A & 6B)	7146	MMBTU/H	Carbon Monoxide	OXIDATION CATALYST AND GOOD COMBUSTION PRACTICES	3	PPMVD @ 15% O2	HOURLY AVERAGE
LA-0257	SABINE PASS LNG TERMINAL	12/06/2011 ACT	Simple Cycle Refrigeration Compressor Turbines (16)	286	MMBTU/H	Carbon Monoxide	Good combustion practices and fueled by natural gas	43.6	LB/H	HOURLY MAXIMUM
LA-0257	SABINE PASS LNG TERMINAL	12/06/2011 ACT	Combined Cycle Refrigeration Compressor Turbines (8)	286	MMBTU/H	Carbon Monoxide	Good combustion practices and fueled by natural gas	43.6	LB/H	HOURLY MAXIMUM
LA-0257	SABINE PASS LNG TERMINAL	12/06/2011 ACT	Simple Cycle Generation Turbines (2)	286	MMBTU/H	Carbon Monoxide	Good combustion practices and fueled by natural gas	17.46	LB/H	HOURLY MAXIMUM
LA-0331	CALCASIEU PASS LNG PROJECT	09/21/2018 ACT	Combined Cycle Combustion Turbines (CCCT1 to CCCT5)	921	MM BTU/h	Carbon Monoxide	Oxidation Catalyst, Proper Design, Good Combustion Practices.	5	PPMV	30 DAY ROLLING AVERAGE
LA-0331	CALCASIEU PASS LNG PROJECT	09/21/2018 ACT	Aeroderivative Simple Cycle Combustion Turbine	263	MM BTU/h	Carbon Monoxide	Proper Equipment Design, Proper Operation, and Good Combustion Practi	36	PPMV	30 DAY ROLLING AVERAGE
LA-0331	CALCASIEU PASS LNG PROJECT	09/21/2018 ACT	Simple Cycle Combustion Turbines (SCCT1 to SCCT3)	927	MM BTU/h	Carbon Monoxide	Proper Equipment Design, Proper Operation, and Good Combustion Practi	25	PPMV	30 DAY ROLLING AVERAGE
MA-0039	SALEM HARBOR STATION REDEVELOPMENT	01/30/2014 ACT	Combustion Turbine with Duct Burner	2449	MMBTU/H	Carbon Monoxide	oxidation catalyst	2	PPMVD@15% O2	1 HR AVG, DOES NOT APPLY DURING SS
MD-0041	CPV ST. CHARLES	04/23/2014 ACT	2 COMBINED-CYCLE COMBUSTION TURBINES	725	MEGAWATT	Carbon Monoxide	OXIDATION CATALYST AND GOOD COMBUSTION PRACTICES	2	PPMVD @ 15% O2	3-HOUR BLOCK AVERAGE, EXCLUDING SU/SD
*MD-0042	WILDCAT POINT GENERATION FACILITY	04/08/2014 ACT	2 COMBINED CYCLE COMBUSTION TURBINES, WITHOUT DUCT FIRING	270	MW	Carbon Monoxide	EXCLUSIVE USE OF PIPELINE QUALITY NATURAL GAS, USE OF AN OXIDATIO	1.5	PPMVD @ 15% O2	3-HOUR BLOCK AVERAGE, EXCLUDING SU/SD
MD-0045	MATTAWOMAN ENERGY CENTER	11/13/2015 ACT	2 COMBINED-CYCLE COMBUSTION TURBINES - COLD STARTUP	286	MW	Carbon Monoxide	GOOD COMBUSTION PRACTICES AND OXIDATION CATALYST	1772	LB/EVENT	CO LD STARTUP
MD-0045	MATTAWOMAN ENERGY CENTER	11/13/2015 ACT	2 COMBINED-CYCLE COMBUSTION TURBINES	286	MW	Carbon Monoxide	GOOD COMBUSTION PRACTICES AND OXIDATION CATALYST	2	PPMVD @ 15% O2	3-HOUR BLOCK AVERAGE (EXCLUDING SU/SD)
MD-0045	MATTAWOMAN ENERGY CENTER	11/13/2015 ACT	2 COMBINED-CYCLE COMBUSTION TURBINES - WARM STARTUP	286	MW	Carbon Monoxide	GOOD COMBUSTION PRACTICES AND OXIDATION CATALYST	1461	LB/EVENT	WARM STARTUP
MD-0045	MATTAWOMAN ENERGY CENTER	11/13/2015 ACT	2 COMBINED-CYCLE COMBUSTION TURBINES - HOT STARTUP	286	MW	Carbon Monoxide	GOOD COMBUSTION PRACTICES AND OXIDATION CATALYST	1216	LB/EVENT	HOT STARTUP
MD-0045	MATTAWOMAN ENERGY CENTER	11/13/2015 ACT	2 COMBINED-CYCLE COMBUSTION TURBINES - SHUTDOWN	286	MW	Carbon Monoxide	GOOD COMBUSTION PRACTICES AND OXIDATION CATALYST	156	LB/EVENT	SHUTDOWN
MD-0046	KEYS ENERGY CENTER	10/31/2014 ACT	2 COMBINED-CYCLE COMBUSTION TURBINES	235	MW	Carbon Monoxide	GOOD COMBUSTION PRACTICES AND OXIDATION CATALYST	2	PPMVD @ 15% O2	3-HOUR BLOCK AVERAGE
MD-0046	KEYS ENERGY CENTER	10/31/2014 ACT	2 COMBINED-CYCLE COMBUSTION TURBINES - COLD STARTUP	235	MW	Carbon Monoxide	GOOD COMBUSTION PRACTICES AND OXIDATION CATALYST	1064	LB/EVENT	CO LD STARTUP
MD-0046	KEYS ENERGY CENTER	10/31/2014 ACT	2 COMBINED-CYCLE COMBUSTION TURBINES - WARM STARTUP	235	MW	Carbon Monoxide	GOOD COMBUSTION PRACTICES AND OXIDATION CATALYST	311	LB/EVENT	WARM STARTUP
MD-0046	KEYS ENERGY CENTER	10/31/2014 ACT	2 COMBINED-CYCLE COMBUSTION TURBINES - HOT STARTUP	235	MW	Carbon Monoxide	GOOD COMBUSTION PRACTICES AND OXIDATION CATALYST	269	LB/EVENT	HOT STARTUP
MD-0046	KEYS ENERGY CENTER	10/31/2014 ACT	2 COMBINED-CYCLE COMBUSTION TURBINES - SHUTDOWN	235	MW	Carbon Monoxide	GOOD COMBUSTION PRACTICES AND OXIDATION CATALYST	60	LB/EVENT	SHUTDOWN
MI-0402	SUMPTER POWER PLANT	11/17/2011 ACT	Combined cycle combustion turbine w/ HRSG	130	MW electrical output	Carbon Monoxide		0.048	LB/MMBTU	24-HR ROLLING AVERAGE
MI-0405	MIDLAND COGENERATION VENTURE	04/23/2013 ACT	Natural gas fueled combined cycle combustion turbine generators (CTG) with HRSG	2237	MMBTU/H	Carbon Monoxide	Good combustion practices	9	PPM	EACH CTG; 24-H ROLLING AVG.
MI-0405	MIDLAND COGENERATION VENTURE	04/23/2013 ACT	Natural gas fueled combined cycle combustion turbine generators (CTG) with HRSG and duct burner (DB)	2486	MMBTU/H	Carbon Monoxide	Good combustion practices	10.5	PPM	EACH CTG/DB; 24-H ROLLING AVG.
MI-0405	MIDLAND COGENERATION VENTURE	04/23/2013 ACT	Natural gas fueled combined cycle combustion turbine generators (CTG) with HRSG--Startup/Shutdown	2237	MMBTU/H each	Carbon Monoxide	Good combustion practices	3123	LB/H	HOURLY DURING STARTUP
MI-0406	RENAISSANCE POWER LLC	11/01/2013 ACT	FG-CTG1-4 Natural gas fueled combined cycle combustion turbine generators (CTG)	2147	MMBTU/H	Carbon Monoxide	Catalytic oxidation system	11.4	LB/H	24-H ROLL AVG.; EACH HR OPERATE; NOT SS
MI-0406	RENAISSANCE POWER LLC	11/01/2013 ACT	FG-CTG/DB1-4 Natural gas fueled combined cycle combustion turbine generators; duct burner on HRSG	2807	MMBTU/H	Carbon Monoxide	Catalytic oxidation system (COS)	14.5	LB/H	24-H ROLL AVG.; EACH HR TURBINE OPERATES
MI-0410	THETFORD GENERATING STATION	07/25/2013 ACT	FG-PEAKERS: 2 natural gas fired simple cycle combustion turbines	171	MMBTU/H	Carbon Monoxide	Efficient combustion	0.11	LB/MMBTU	TEST PROTOCOL WILL SPECIFY AVG. TIME
MI-0432	NEW COVERT GENERATING FACILITY	07/30/2018 ACT	FG-TURB/DB1-3 (3 combined cycle combustion turbine and heat recovery steam generator trains)	1230	MW	Carbon Monoxide	Oxidation catalyst technology and good combustion practices.	2	PPMVD	EACH CT/HRSG TRAIN; 24-HR ROLL AVG
MI-0433	MEC NORTH, LLC AND MEC SOUTH LLC	06/29/2018 ACT	EUCTGHRSG (South Plant): A combined cycle natural gas-fired combustion turbine generator with heat recove	500	MW	Carbon Monoxide	Oxidation catalyst technology and good combustion practices.	4	PPMV	AT 15%O2; 240HR ROLL AVG; NOT S.S.
MI-0433	MEC NORTH, LLC AND MEC SOUTH LLC	06/29/2018 ACT	EUCTGHRSG (North Plant): A combined-cycle natural gas-fired combustion turbine generator with heat recove	500	MW	Carbon Monoxide	Oxidation catalyst technology and good combustion practices.	4	PPMVD	AT 15%O2; 24-H ROLLAVG; NOT INCLS T/SH
*MI-0441	LBWL--ERICKSON STATION	12/21/2018 ACT	EUCTGHRSG1--A 667 MMBTU/H NG fired combustion turbine generator coupled with a heat recovery steam g	667	MMBTU/H	Carbon Monoxide	An oxidation catalyst for CO control for each CTG/HRSG unit; good combus	4	PPM	PPMVD@15%O2;24-H ROLL AVG; SEE NOTES
NJ-0079	WOODBRIDGE ENERGY CENTER	07/25/2012 ACT	Combined Cycle Combustion Turbine with Duct Burner	40297.6	mmcubic ft/year	Carbon Monoxide	Oxidation Catalyst; Good Combustion Practices	12.1	LB/H	AVERAGE OF THREE 1-HOUR TESTS
NJ-0079	WOODBRIDGE ENERGY CENTER	07/25/2012 ACT	Combined Cycle Combustion Turbine w/o duct burner	40297.6	mmcubic ft/year	Carbon Monoxide	Oxidation Catalyst, good combustion practices and use only natural gas a c	2	PPMVD	3-HR ROLLING AVE BASED ON 1-HR BLOCK
NJ-0080	HESS NEWARK ENERGY CENTER	11/01/2012 ACT	Combined cylce turbine with duct burner	3946.3	mmcubic ft/year*	Carbon Monoxide	Oxidation catalyst	2	PPMVD	3-HR ROLLING AVERAGE BASED ON 1-HR BLOCK
NJ-0080	HESS NEWARK ENERGY CENTER	11/01/2012 ACT	Combined Cycle Combustion Turbine	3946.3	MMCubic ft/yr	Carbon Monoxide	Oxidation Catalyst and Good combustion Practices and use of natural gas a	10.2	LB/H	AVERAGE OF THREE TESTS
NJ-0081	PSEG FOSSIL LLC SEWAREN GENERATING STATION	03/07/2014 ACT	Combined Cycle Combustion Turbine -Siemens turbine without Duct Burner	3369.1	MMCF/YR	Carbon Monoxide	CO Oxidation Catalyst and Good Combustion Practices and use of Natural g	2	PPMVD@15% O2	3-HR ROLLING AVE BASED ON 1-HR BLOCK
NJ-0081	PSEG FOSSIL LLC SEWAREN GENERATING STATION	03/07/2014 ACT	COMBINED CYCLE COMBUSTION TURBINE WITH DUCT BURNER - SIEMENS	3369.1	MMCF/YR	Carbon Monoxide	Oxidation catalyst and use of only natural gas a clean burning fuel	2	PPMVD	3-HR ROLLING AVE BASED ON 1-HR BLOCK AVE
NJ-0081	PSEG FOSSIL LLC SEWAREN GENERATING STATION	03/07/2014 ACT	COMBINED CYCLE COMBUSTION TURBINE WITH DUCT BURNER - GENERAL ELECTRIC	3369.1	MMCF/YR	Carbon Monoxide	CO Oxidation catalyst and good combustion practices and use of natural ga	2	PPMVD@15%O2	3-HR ROLLING AVERAGE BASED ON 1-HR BLOCK
NJ-0081	PSEG FOSSIL LLC SEWAREN GENERATING STATION	03/07/2014 ACT	COMBINED CYCLE COMBUSTION TURBINE WITHOUT DUCT BURNER - GENERAL ELECTRIC	3369.1	MMCF/YR	Carbon Monoxide	CO Oxidation Catalyst and Good Combustion Practices and use of Natural g	2	PPMVD@15%O2	3-HR ROLLING AVE BASED ON 1-HR BLOCK
NJ-0082	WEST DEPTFORD ENERGY STATION	07/18/2014 ACT	Combined Cycle Combustion Turbine without Duct Burner	2028.2	MMCF/YR	Carbon Monoxide	Oxidation Catalyst and Use of Natural gas a clean burning fuel	0.9	PPMVD@15%O2	3-HR ROLLING AVE BASED ON 1-HR BLOCK
NJ-0082	WEST DEPTFORD ENERGY STATION	07/18/2014 ACT	Combined Cycle Combustion Turbine with Duct Burner	2028.2	MMCF/YR	Carbon Monoxide	Oxidation catalyst and use of natural gas a clean burning fuel	1.5	PPMVD@15%O2	3-HR ROLLING AVE BASED ON 1-HR BLOCK
NJ-0085	MIDDLESEX ENERGY CENTER, LLC	07/19/2016 ACT	Combined Cycle Combustion Turbine firing Natural Gas with Duct Burner	4000	h/yr	Carbon Monoxide	Oxidation Catalyst and good combustion practices	2	PPMVD@15% O2	3 H ROLLING AV BASED ON ONE H BLOCK AV
NJ-0085	MIDDLESEX ENERGY CENTER, LLC	07/19/2016 ACT	Combined Cycle Combustion Turbine firing Natural Gas without Duct Burner	8040	H/YR	Carbon Monoxide	OXIDATION CATALYST AND GOOD COMBUSTION PRACTICES	2	PPMVD@15% O2	3 H ROLLING AV BASED ON ONE H BLOCK AV
NJ-0085	MIDDLESEX ENERGY CENTER, LLC	07/19/2016 ACT	COMBINED CYCLE COMBUSTION TURBINE FIRING ULTRA LOW SULFUR DISTILLATE OIL	720	H/YR	Carbon Monoxide	Oxidation Catalyst and good combustion practices	2	PPMVD@15%O2	3 H ROLLING AV BASED ON ONE H BLOCK AV
NY-0104	CPV VALLEY ENERGY CENTER	08/01/2013 ACT	Turbines - diesel fuel	0		Carbon Monoxide	Good combustion practice and oxidation catalyst.	2	PPMVD @ 15% O2	1 H
NY-0104	CPV VALLEY ENERGY CENTER	08/01/2013 ACT	Turbines and duct burners - NG	0		Carbon Monoxide	Good combustion practice and oxidation catalyst.	2	PPMVD @ 15% O2	1 H
OH-0352	OREGON CLEAN ENERGY CENTER	06/18/2013 ACT	2 Combined Cycle Combustion Turbines-Siemens, without duct burners	515600	MMSCF/rolling 12-months	Carbon Monoxide	oxidation catalyst	13	LB/H	
OH-0352	OREGON CLEAN ENERGY CENTER	06/18/2013 ACT	2 Combined Cycle Combustion Turbines-Siemens, with duct burners	51560	MMSCF/rolling 12-MO	Carbon Monoxide	oxidation catalyst	13	LB/H	
OH-0352	OREGON CLEAN ENERGY CENTER	06/18/2013 ACT	2 Combined Cycle Combustion Turbines-Mitsubishi, without duct burners	47917	MMSCF/rolling 12-MO	Carbon Monoxide	oxidation catalyst	13.7	LB/H	
OH-0352	OREGON CLEAN ENERGY CENTER	06/18/2013 ACT	2 Combined Cycle Combustion Turbines-Mitsubishi, with duct burners	47917	MMSCF/rolling 12-MO	Carbon Monoxide	oxidation catalyst	12.7	LB/H	
OH-0356	DUKE ENERGY HANGING ROCK ENERGY	12/18/2012 ACT	Turbines (4) (model GE 7FA) Duct Burners Off	172	MW	Carbon Monoxide	Good combustion practices burning natural gas	25.7	LB/H	
OH-0356	DUKE ENERGY HANGING ROCK ENERGY	12/18/2012 ACT	Turbines (4) (model GE 7FA) Duct Burners On	172	MW	Carbon Monoxide	Good combustion practices burning natural gas	45.9	LB/H	
OH-0360	CARROLL COUNTY ENERGY	11/05/2013 ACT	Combined Cycle Combustion Turbines (two, identical) (P001 and P002)	2045	MMBTU/H	Carbon Monoxide	oxidation catalyst	12.5	LB/H	WITH DUCT BURNER. SEE NOTES.

OH-0363	NTE OHIO, LLC	11/05/2014 ACT	Turbine generator with HRSG and duct burners (P001)	3278.5	MMBTU/H	Carbon Monoxide	Used of natural gas, combustion controls, and catalytic oxidation	16.8	LB/H	WITH DUCT BURNER. SEE NOTES.
OH-0365	ROLLING HILLS GENERATING, LLC	05/20/2015 ACT	Combustion Turbines, Scenario 1 (4, identical) (P001, P002, P004, P005)	2022	MMBTU/H	Carbon Monoxide	Oxidation catalyst	10.4	LB/H	WITHOUT DUCT BURNERS. SEE NOTES.
OH-0365	ROLLING HILLS GENERATING, LLC	05/20/2015 ACT	Combustion Turbines, Scenario 2 (4, identical) (P001, P002, P004, P005)	2144	MMBTU/H	Carbon Monoxide	Oxidation catalyst	12	LB/H	WITH DUCT BURNER. SEE NOTES.
OH-0366	CLEAN ENERGY FUTURE - LORDSTOWN, LLC	08/25/2015 ACT	Combined Cycle Combustion Turbines (two, identical) (P001 and P002)	2725	MMBTU/H	Carbon Monoxide	Good combustion controls and oxidation catalyst	14.3	LB/H	WITH DUCT BURNER. SEE NOTES.
OH-0367	SOUTH FIELD ENERGY LLC	09/23/2016 ACT	Combined Cycle Combustion Turbines (two, identical) (P001 and P002)	3131	MMBTU/H	Carbon Monoxide	Good combustion controls and oxidation catalyst	18.57	LB/H	WITH DUCT BURNER. SEE NOTES.
OH-0370	TRUMBULL ENERGY CENTER	09/07/2017 ACT	Combined Cycle Combustion Turbines (two, identical) (P001 and P002)	3025	MMBTU/H	Carbon Monoxide	Good combustion controls and oxidation catalyst	15.3	LB/H	WITH DUCT BURNER. SEE NOTES.
OH-0372	OREGON ENERGY CENTER	09/27/2017 ACT	Combined Cycle Combustion Turbines (two, identical) (P001 and P002)	3055	MMBTU/H	Carbon Monoxide	oxidation catalysts and good combustion control	15.5	LB/H	WITH DUCT BURNER. SEE NOTES.
OH-0374	GUERNSEY POWER STATION LLC	10/23/2017 ACT	Combined Cycle Combustion Turbines (3, identical) (P001 to P003)	3516	MMBTU/H	Carbon Monoxide	oxidation catalysts and good combustion practices as recommended by the	20.76	LB/H	WITH DUCT BURNER. SEE NOTES.
OH-0375	LONG RIDGE ENERGY GENERATION LLC - HANNIBAL POWER	11/07/2017 ACT	General Electric Combustion Turbine (P004)	3544	MMBTU/H	Carbon Monoxide	Oxidation catalyst and good combustion practices as recommended by the	15.9	LB/H	EXCEPT STARTUP AND SHUTDOWN. SEE NOTES
OH-0375	LONG RIDGE ENERGY GENERATION LLC - HANNIBAL POWER	11/07/2017 ACT	Mitsubishi Combustion Turbine (P005)	3320	MMBTU/H	Carbon Monoxide	oxidation catalysts and shall operate the emissions unit in accordance with g	15.3	LB/H	WITH DUCT BURNER. SEE NOTES.
OH-0375	LONG RIDGE ENERGY GENERATION LLC - HANNIBAL POWER	11/07/2017 ACT	Siemens Combustion Turbine (P006)	3602	MMBTU/H	Carbon Monoxide	oxidation catalysts and shall operate the emissions unit in accordance with g	16.5	LB/H	WITH DUCT BURNER. SEE NOTES.
OH-0377	HARRISON POWER	04/19/2018 ACT	General Electric (GE) Combustion Turbines (P005 & P006)	3459.6	MMBTU/H	Carbon Monoxide	Good combustion practices and oxidation catalyst	17.9	LB/H	WITH DUCT BURNER. SEE NOTES.
OH-0377	HARRISON POWER	04/19/2018 ACT	Mitsubishi Hitachi Power Systems (MHPS) Combustion Turbines (P007 & P008)	3231	MMBTU/H	Carbon Monoxide	Good combustion practices and oxidation catalyst	17.1	LB/H	WITH DUCT BURNER. SEE NOTES.
OK-0154	MOORELAND GENERATING STA	07/02/2013 ACT	Combustion Turbine	360	MW	Carbon Monoxide	Oxidation catalyst and good combustion practice.	2	PPMVD@15%O2	3-HR
OK-0154	MOORELAND GENERATING STA	07/02/2013 ACT	COMBUSTION TURBINE	360	MW	Carbon Monoxide	OXIDATION CATALYST AND GOOD COMBUSTION PRACTICES.	2	PPMVD@15% O2	3-HR
OK-0157	CHOUTEAU POWER PLANT	09/05/2013 ACT	LARGE COMBUSTION TURBINES-COMBINED CYCLE & COGEN	182	MMBTU	Carbon Monoxide		1750	LB/EVENT	2-HRS/HOT STARTUP
OK-0157	CHOUTEAU POWER PLANT	09/05/2013 ACT	Turbine	178	MW	Carbon Monoxide	Minimize time spent in startup/shutdown.	4500	LB/EVENT	2 HOURS / CD LD STARTUP
OK-0169	PSO COMANCHE POWER STATION	10/08/2015 ACT	COMBINED CYCLE COMBUSTION TURBINE	1250	MMBTUH	Carbon Monoxide	Controlled Startup and Shutdown procedures with respect to Dry Low NOx	0.0785	LB/MMBTU	3-HR AVG NORMAL OPERATION
OR-0050	TROUTDALE ENERGY CENTER, LLC	03/05/2014 ACT	Mitsubishi M501-GAC combustion turbine, combined cycle configuration with duct burner.	2988	MMBTU/H	Carbon Monoxide	Oxidation catalyst; Limit the time in startup or shutdown.	3.3	PPMDV AT 15% O2	3-HR ROLLING AVERAGE ON NG
OR-0050	TROUTDALE ENERGY CENTER, LLC	03/05/2014 ACT	GE LMS-100 combustion turbines, simple cycle with water injection	1690	MMBTU/H	Carbon Monoxide	Oxidation catalyst; Limit the time in startup or shutdown.	6	PPMDV AT 15% O2	3-HR ROLLING AVERAGE ON NG
PA-0278	MOXIE LIBERTY LLC/ASYLUM POWER PLT	10/10/2012 ACT	Combined-cycle Turbines (2) - Natural gas fired	3277	MMBTU/H	Carbon Monoxide	Oxidation Catalyst	2	PPMVD	@15% O2
PA-0288	SUNBURY GENERATION LP/SUNBURY SES	04/01/2013 ACT	Combined Cycle Combustion Turbine AND DUCT BURNER (3)	2538000	MMBTU/H	Carbon Monoxide	Oxidation Catalyst	2	PPM	CORRECTED TO 15% OXYGEN
PA-0296	BERKS HOLLOW ENERGY ASSOC LLC/ONTELAUNEE	12/17/2013 ACT	Turbine, Combined Cycle, #1 and #2	3046	MMBTU/H	Carbon Monoxide	CO Catalyst	211.92	TPY	12-MONTH ROLLING TOTAL
*PA-0298	FUTURE POWER PA/GOOD SPRINGS NGCC FACILITY	03/04/2014 ACT	Turbine, COMBINED CYCLE UNIT (Siemens 5000)	2267	MMBTU/H	Carbon Monoxide	CO Catalyst	3	PPMVD	@ 15% OXYGEN
PA-0306	TENASKA PA PARTNERS/WESTMORELAND GEN FAC	02/12/2016 ACT	Large combustion turbine	0		Carbon Monoxide	Oxidation Catalyst and good combustion practice	15.9	LB/HR	3 HR AVERAGE
PA-0307	YORK ENERGY CENTER BLOCK 2 ELECTRICITY GENERATION PROJECT	06/15/2015 ACT	Two combined cycle combustion turbines ULSD fired with duct burner NG fired	0		Carbon Monoxide	Oxidation catalyst, good combustion practices and low sulfur fuels	3.5	PPMDV @ 15% O2	
PA-0307	YORK ENERGY CENTER BLOCK 2 ELECTRICITY GENERATION PROJECT	06/15/2015 ACT	Two Combine Cycle Combustion Turbine with Duct Burner	3001.57	MCF/hr	Carbon Monoxide	Oxidation catalyst and good combustion practices	2	PPMDV @ 15% O2	
PA-0309	LACKAWANNA ENERGY CTR/JESSUP	12/23/2015 ACT	Combustion turbine with duct burner	3304.3	MMBtu/hr	Carbon Monoxide	Oxidation catalyst, combustion controls, exclusive natural gas	2	PPMDV @ 15 % O2	
PA-0310	CPV FAIRVIEW ENERGY CENTER	09/02/2016 ACT	Combustion turbine and HRSG with duct burner NG only	3338	MMBtu/hr	Carbon Monoxide	Oxidation catalyst operated at all steady state operating loads and good co	2	PPMDV @ 15% O2	
PA-0310	CPV FAIRVIEW ENERGY CENTER	09/02/2016 ACT	Combustion turbine and HRSG with duct burner - firing NG blend with ethane	0		Carbon Monoxide		0		
PA-0310	CPV FAIRVIEW ENERGY CENTER	09/02/2016 ACT	Combustion turbine and HRSG without duct burner - firing NG blend with ethane	0		Carbon Monoxide		0		
PA-0311	MOXIE FREEDOM GENERATION PLANT	09/01/2015 ACT	Combustion Turbine With Duct Burner	3727	MMBtu/hr	Carbon Monoxide	Oxidation catalyst and good combustion practices	2	PPMDV @ 15% O2	
PA-0311	MOXIE FREEDOM GENERATION PLANT	09/01/2015 ACT	Combustion Turbine without Duct Burner	0		Carbon Monoxide	Oxidation catalyst, good engineering practice	2	PPMDV @ 15% O2	
*PA-0315	HILLTOP ENERGY CENTER, LLC	04/12/2017 ACT	Combustion Turbine without Duct Burner	3509	MMBtu/hr	Carbon Monoxide	Oxidation Catalyst	2	PPMDV	CORRECTED TO 15% O2
*PA-0319	RENAISSANCE ENERGY CENTER	08/27/2018 ACT	COMBUSTION TURBINE UNIT w/o DUCT BURNERS UNIT	2665.9	MMBtu/hr	Carbon Monoxide	Oxidation Catalyst	2	PPDV	@15% O2
TN-0162	JOHNSONVILLE COGENERATION	04/19/2016 ACT	Natural Gas-Fired Combustion Turbine with HRSG	1339	MMBtu/hr	Carbon Monoxide	Good combustion design and practices, oxidation catalyst	2	PPMVD @ 15% O2	30 UNIT-OPERATING-DAY MOVING AVERAGE
TX-0590	KING POWER STATION	08/05/2010 ACT	Turbine	1350	MW	Carbon Monoxide	good combustion practices with an oxidation catalyst	2	PPMVD AT 15% O2	THREE-HOUR ROLLING
TX-0600	THOMAS C. FERGUSON POWER PLANT	09/01/2011 ACT	Natural gas-fired turbines	390	MW	Carbon Monoxide	Good combustion practices and oxidation catalyst	4	PPMVD	ROLLING 3-HR AT 15% OXYGEN/LOAD >= 60%
TX-0618	CHANNEL ENERGY CENTER LLC	10/15/2012 ACT	Combined Cycle Turbine	180	MW	Carbon Monoxide	Good combustion	4	PPMVD	@ 15% O2 ON A 24-HR ROLLING AVG
TX-0619	DEER PARK ENERGY CENTER	09/26/2012 ACT	Combined Cycle Turbine	180	MW	Carbon Monoxide	good combustion	4	PPMVD	@15% O2, 24-HR ROLLING AVG
TX-0620	ES JOSUN POWER PLANT	09/12/2012 ACT	Combined cycle gas turbine	195	MW	Carbon Monoxide	good combustion	4	PPMVD	@15% O2, 24-HR ROLLING AVG
TX-0641	PINECREST ENERGY CENTER	11/12/2013 ACT	combined cycle turbine	700	MW	Carbon Monoxide	oxidation catalyst	2	PPMVD	3-HR ROLL AVG, 15% OXYGEN, 80-100% LOAD
*TX-0660	FGE TEXAS POWER I AND FGE TEXAS POWER II	03/24/2014 ACT	Alstom Turbine	230.7	MW	Carbon Monoxide	Oxidation catalyst	2	PPMVD	CORRECTED TO 15% O2, ROLLING 3 HR AVE
TX-0672	CORPUS CHRISTI LIQUEFACTION PLANT	09/12/2014 ACT	Refrigeration compressor turbines	40000	hp	Carbon Monoxide	dry low emission combustors	29	PPMVD	@15% O2, 4 HOUR ROLLING AVERAGE
TX-0672	CORPUS CHRISTI LIQUEFACTION PLANT	09/12/2014 ACT	Refrigeration compressor turbines	40000	hp	Carbon Monoxide	dry low emission combustors	29	PPMVD	@15% O2, 4 HOUR ROLLING AVERAGE
TX-0678	FREEPORT LNG PRETREATMENT FACILITY	07/16/2014 ACT	Combustion Turbine	87	MW	Carbon Monoxide	oxidation catalyst	4	PPMVD	@15% O2, 3 HOUR ROLLING AVERAGE
TX-0687	WEST PLANT AND EAST PLANT CENTRAL HEAT AND POWER	10/13/2014 ACT	Two Combustion Turbine-Generators	13	MW	Carbon Monoxide	Good combustion practices	50	PPM	15% O2, 24HR ROLLING AVG.
TX-0689	CEDAR BAYOU ELECTRIC GENERATION STATION	08/29/2014 ACT	Combined cycle natural gas turbines	225	MW	Carbon Monoxide	OC	2	PPM	ROLLING 12 MONTHS
TX-0698	BAYPORT COMPLEX	09/05/2013 ACT	(4) cogeneration turbines	90	MW	Carbon Monoxide	DLN and Closed Loop Emissions Controls (CLEC)	15	PPMVD	@15% O2
TX-0708	LA PALOMA ENERGY CENTER	02/07/2013 ACT	(2) combined cycle turbines	650	MW	Carbon Monoxide	oxidation catalyst	2	PPMVD	@15% O2, 3-HR ROLLING, 80-100% LOAD
TX-0709	SAND HILL ENERGY CENTER	09/13/2013 ACT	Natural gas-fired combined cycle turbines	173.9	MW	Carbon Monoxide	OC	2	PPM	1HR AVG.
TX-0710	VICTORIA POWER STATION	12/01/2014 ACT	combined cycle turbine	197	MW	Carbon Monoxide	oxidation catalyst	4	PPMVD	@15% O2, 3-HR ROLLING AVERAGE
TX-0712	TRINIDAD GENERATING FACILITY	11/20/2014 ACT	combined cycle turbine	497	MW	Carbon Monoxide	oxidation catalyst	4	PPMVD	@15% O2, 24-HR ROLLING AVERAGE
TX-0713	TENASKA BROWNSVILLE GENERATING STATION	04/29/2014 ACT	(2) combined cycle turbines	274	MW	Carbon Monoxide	oxidation catalyst	2	PPMVD	@15% O2, 24-HR ROLLING AVERAGE
TX-0714	S R BERTRON ELECTRIC GENERATING STATION	12/19/2014 ACT	(2) combined cycle turbines	240	MW	Carbon Monoxide	oxidation catalyst	4	PPMVD	@15% O2, ONE HOUR
TX-0727	CEDAR BAYOU ELECTRIC GENERATING STATION	03/31/2015 ACT	Combined cycle turbines	187	MW/turbine	Carbon Monoxide	Oxidation catalysts	15	PPMVD	15%O2
TX-0730	COLORADO BEND ENERGY CENTER	04/01/2015 ACT	Combined-cycle gas turbine electric generating facility	1100	MW	Carbon Monoxide	SCR and oxidation catalyst	4	PPMVD @ 15% O2	3-HR AVERAGE
TX-0751	EAGLE MOUNTAIN STEAM ELECTRIC STATION	06/18/2015 ACT	Combined Cycle Turbines (>25 MW) â€" natural gas	210	MW	Carbon Monoxide	Oxidation catalyst	2	PPM	ROLLING 24-HR AVERAGE
TX-0767	LON C. HILL POWER STATION	10/02/2015 ACT	Combined Cycle Turbines (>25 MW)	195	MW	Carbon Monoxide	Oxidation Catalyst	2	PPM	ROLLING 24-HR AVERAGE
TX-0773	FGE EAGLE PINES PROJECT	11/04/2015 ACT	Combined Cycle Turbines (>25 MW)	321	MW	Carbon Monoxide	Oxidation Catalyst	2	PPM	3-HR AVERAGE
TX-0788	NECHES STATION	03/24/2016 ACT	Large Combustion Turbines > 25 MW	232	MW	Carbon Monoxide	good combustion practices	9	PPM	
TX-0790	PORT ARTHUR LNG EXPORT TERMINAL	02/17/2016 ACT	Refrigeration Compression Turbines	10	M TONNES/YR	Carbon Monoxide	Dry low NOx burners and good combustion practices	25	PPM	ROLLING 3-HR AVERAGE
TX-0790	PORT ARTHUR LNG EXPORT TERMINAL	02/17/2016 ACT	Simple Cycle Electrical Generation Gas Turbines 15 210	34	MW	Carbon Monoxide	OXIDATION CATALYST	9	PPM	ROLLING 3-HR AVERAGE
TX-0819	GAINES COUNTY POWER PLANT	04/28/2017 ACT	Simple Cycle Turbine	227.5	MW	Carbon Monoxide	Good combustion practices; limited operating hours	9	PPMVD	3% O2 3-H AVG
TX-0819	GAINES COUNTY POWER PLANT	04/28/2017 ACT	Combined Cycle Turbine with Heat Recovery Steam Generator, fired Duct Burners, and Steam Turbine Generat	426	MW	Carbon Monoxide	Selective Catalytic Reduction (SCR) and Dry Low NOx burners	2	PPMVD	15% O2 3-H AVG
TX-0834	MONTGOMERY COUNTY POWER STATIOIN	03/30/2018 ACT	Combined Cycle Turbine	2635	MMBTU/HR/UNIT	Carbon Monoxide	OXIDATION CATALYST	2	PPMVD	15% O2 3 HOUR AVERAGE
TX-0834	MONTGOMERY COUNTY POWER STATIOIN	03/30/2018 ACT	COMBINED CYCLE TURBINE MSS REDUCED LOAD	0		Carbon Monoxide	minimizing duration of startup / shutdown events, engaging the pollution c	8000	LB/H	
VA-0315	WARREN COUNTY POWER PLANT - DOMINION	12/17/2010 ACT	COMBINED CYCLE TURBINE & DUCT BURNER, 3	2996	MMBTU/H	Carbon Monoxide	Oxidation catalyst and good combustion practices.	1.5	PPMVD	ONE HR AVERAGE (W/O DUCT BURNER FIRING)
VA-0321	BRUNSWICK COUNTY POWER STATION	03/12/2013 ACT	COMBUSTION TURBINE GENERATORS, (3)	3442	MMBTU/H	Carbon Monoxide	Oxidation catalyst; good combustion practices.	1.5	PPMVD	3 H AVG/WITHOUT DUCT BURNING
VA-0321	BRUNSWICK COUNTY POWER STATION	03/12/2013 ACT	Three Mitsubishi M501 GAC Turbines (3,442 mmBtu/hr each)	0	ls	Carbon Monoxide	Oxidation catalyst and good combustion practices including the minimizati	1.5	PPMVD	3-HOUR ROLLING AVG W/O DUCT BURNER
VA-0322	GREEN ENERGY PARTNERS/ STONEWALL, LLC	04/30/2013 ACT	Large combustion turbines (>25MW) CCT1 and CCT2	2.23	MMBTU/H	Carbon Monoxide	Catalytic Oxidizer	0		
VA-0325	GREENSVILLE POWER STATION	06/17/2016 ACT	COMBUSTION TURBINE GENERATOR WITH DUCT-FIRED HEAT RECOVERY STEAM GENERATORS (3)	3227	MMBTU/HR	Carbon Monoxide	Oxidation Catalyst	1.6	PPMVD	3 HR AVG
VA-0328	C4GT, LLC	04/26/2018 ACT	GE Combustion Turbine - Option 1 - Normal Operation	34000	MMCF/YR	Carbon Monoxide	Oxidation catalyst and good combustion practices	1	PPMVD@ 15% O2	3 HR AV/WITHOUT DB
VA-0328	C4GT, LLC	04/26/2018 ACT	Siemens Combustion Turbine - Option 2 - Normal Operation	35000	MMCF/YR	Carbon Monoxide	Oxidation catalyst & good combustion practice	1.8	PPMVD @ 15% O2	3 H AV/WITH OR WITHOUT DB
VA-0328	C4GT, LLC	04/26/2018 ACT	GE Combustion Turbine - Tuning & Water Washing	34000	MMCF/YR	Carbon Monoxide	Oxidation catalyst and good combustion practices	194	LB/TURBINE/DAY	24 HR AV
VA-0328	C4GT, LLC	04/26/2018 ACT	GE Combustion Turbine - Startup and Shutdown	34000	MMCF/YR	Carbon Monoxide	Oxidation catalyst and good combustion practice	840	LB/TURBINE/EVENT	CD LD START 60 MIN OR LESS
VA-0328	C4GT, LLC	04/26/2018 ACT	Siemens Combustion Turbine - Tuning & Water Washing	35000	MMCF/YR	Carbon Monoxide	Oxidation catalyst and good combustion practices	309	LB/TURBINE/DAY	24 HR AV
VA-0328	C4GT, LLC	04/26/2018 ACT	Siemens Combustion Turbine - Startup & Shutdown	35000	MMCF/YR	Carbon Monoxide	Oxidation catalyst and good combustion practices	434	LB/TURBINE/EVENT	CD LD START 55 MIN OR LESS
WV-0025	MOUNDSVILLE COMBINED CYCLE POWER PLANT	11/21/2014 ACT	Combined Cycle Turbine/Duct Burner	2419.61	mmBtu/Hr	Carbon Monoxide	Oxidation Catalyst + Combustion Controls	9.2	LB/H	
*WV-0029	HARRISON COUNTY POWER PLANT	03/27/2018 ACT	GE 7HA.02 Turbine	3496.2	mmBtu/hr	Carbon Monoxide	Oxidation Catalyst, Good Combustion Practices	20	LB/HR	1-HOUR AVERAGE
*WV-0032	BROOKE COUNTY POWER PLANT	09/18/2018 ACT	GE 7HA.01 Turbine	2737.7	mmBtu/hr	Carbon Monoxide	Oxidation Catalyst, Good Combustion Practices	14.1	LB/HR	
WY-0070	CHEYENNE PRAIRIE GENERATING STATION	08/28/2012 ACT	Simple Cycle Turbine (EP03)	40	MW	Carbon Monoxide	Oxidation Catalyst	6	PPMV AT 15% O2	1-HOUR
WY-0070	CHEYENNE PRAIRIE GENERATING STATION	08/28/2012 ACT	Combined Cycle Turbine (EP01)	40	MW	Carbon Monoxide	Oxidation Catalyst	4	PPMV AT 15% O2	1-HOUR
WY-0070	CHEYENNE PRAIRIE GENERATING STATION	08/28/2012 ACT	Combined Cycle Turbine (EP02)	40	MW	Carbon Monoxide	Oxidation Catalyst	4	PPMV AT 15% O2	1-HOUR
WY-0070	CHEYENNE PRAIRIE GENERATING STATION	08/28/2012 ACT	Simple Cycle Turbine (EP05)	40	MW	Carbon Monoxide	Oxidation Catalyst	6	PPMV AT 15% O2	1-HOUR AVERAGE

RBLCSUMMARY FOR COMBUSTION TURBINES - VOC

RBLCID	FACILITY_NAME	PERMIT_ISSUANCE_DATE	PROCESS_NAME	THROUGHPUT	THROUGHPUT_UNIT	POLLUTANT	CONTROL_METHOD_DESCRIPTION	EMISSION_LIMIT_1	EMISSION_LIMIT_1_UNIT	EMISSION_LIMIT_1_AVG_TIME_CONDITION
CA-1177	OTAY MESA ENERGY CENTER LLC	07/22/2009 ACT	Gas turbine combined cycle	171.7	MW	Volatile Organic Compounds (VOC)		2	PPMVD@15% OXYGEN	1 HOUR
CA-1211	COLUSA GENERATING STATION	03/11/2011 ACT	COMBUSTION TURBINES (WARM STARTUP PERIODS)	172	MW	Volatile Organic Compounds (VOC)		27.7	LB/H	WARM STARTUP PERIODS
CA-1211	COLUSA GENERATING STATION	03/11/2011 ACT	COMBUSTION TURBINES (HOT STARTUP PERIODS)	172	MW	Volatile Organic Compounds (VOC)		27.7	LB/H	HOT STARTUP PERIODS
CA-1211	COLUSA GENERATING STATION	03/11/2011 ACT	COMBUSTION TURBINES (SHUTDOWN PERIODS)	172	MW	Volatile Organic Compounds (VOC)		23.9	LB/H	TURBINE SHUTDOWN PERIODS
CA-1211	COLUSA GENERATING STATION	03/11/2011 ACT	COMBUSTION TURBINES (NORMAL OPERATION)	172	MW	Volatile Organic Compounds (VOC)		2	PPMVD	@15% O2, 1-HR ROLLING AVG
CA-1211	COLUSA GENERATING STATION	03/11/2011 ACT	COMBUSTION TURBINES (COLD STARTUP PERIODS)	172	MW	Volatile Organic Compounds (VOC)		27.7	LB/H	COLD STARTUP PERIODS
CO-0073	PUEBLO AIRPORT GENERATING STATION	07/22/2010 ACT	Three simple cycle combustion turbines	799.7	MMBTU/H	Volatile Organic Compounds (VOC)	Good Combustion Control and Catalytic Oxidation (CatOx)	2.5	PPMVD AT 15% O2	AVE OVER STACK TEST LENGTH
CO-0073	PUEBLO AIRPORT GENERATING STATION	07/22/2010 ACT	Four combined cycle combustion turbines	373	MMBTU/H	Volatile Organic Compounds (VOC)	good combustion control and catalytic oxidation	4	PPMVD AT 15% O2	AVE OVER STACK TEST LENGTH
GA-0138	LIVE OAKS POWER PLANT	04/08/2010 ACT	COMBINED CYCLE COMBUSTION TURBINE - ELECTRIC GENERATING PLANT	600	MW	Volatile Organic Compounds (VOC)	GOOD COMBUSTION PRACTICES, CATALYTIC OXIDATION	2	PPM@15%O2	3-HOUR AVERAGE/CONDITION 2.11
IA-0107	MARSHALLTOWN GENERATING STATION	04/14/2014 ACT	Combustion turbine #1 - combined cycle	2258	mmBtu/hr	Volatile Organic Compounds (VOC)	catalytic oxidizer	1	PPM	AVG. OF 3 ONE HOUR TEST RUNS
IA-0107	MARSHALLTOWN GENERATING STATION	04/14/2014 ACT	Combustion turbine #2 -combined cycle	2258	mmBtu/hr	Volatile Organic Compounds (VOC)		1	PPM	AVERAGE OF 3 ONE-HOUR TEST RUNS
ID-0018	LANGLEY GULCH POWER PLANT	06/25/2010 ACT	COMBUSTION TURBINE, COMBINED CYCLE W/ DUCT BURNER	2375.28	MMBTU/H	Volatile Organic Compounds (VOC)	DRY LOW NOX (DLN),	2	PPMVD	3-HR ROLLING / 15% O2
IN-0158	ST. JOSEPH ENEGRY CENTER, LLC	12/03/2012 ACT	FOUR (4) NATURAL GAS COMBINED CYCLE COMBUSTION TURBINES	2300	MMBTU/H	Volatile Organic Compounds (VOC)	OXIDIZED CATALYST	1	PPMVD	3 HOURS
IN-0158	ST. JOSEPH ENEGRY CENTER, LLC	12/03/2012 ACT	TURBINE LUBE DEMISTER VENTS	0		Volatile Organic Compounds (VOC)	GOOD DESIGN AND OPERATING PRACTICES	0		
IN-0158	ST. JOSEPH ENEGRY CENTER, LLC	12/03/2012 ACT	TURBINE LUBE OIL STORAGE TANKS	6800	GALLONS EACH	Volatile Organic Compounds (VOC)	GOOD COMBUSTION PRACTICE AND FUEL SPECIFICATION	0		
IN-0158	ST. JOSEPH ENEGRY CENTER, LLC	12/03/2012 ACT	FOUR (4) NATURAL GAS COMBINED CYCLE COMBUSTION TURBINES - START UP/SHUTDOWN CYCLE	2300	MMBTU/H	Volatile Organic Compounds (VOC)		22	TONS	12 CONSECUTIVE MONTH PERIOD
LA-0254	NINEMILE POINT ELECTRIC GENERATING PLANT	08/16/2011 ACT	COMBINED CYCLE TURBINE GENERATORS (UNITS 6A & 6B)	7146	MMBTU/H	Volatile Organic Compounds (VOC)	GOOD COMBUSTION PRACTICES	1.4	PPMVD @ 15% O2	HOURLY AVERAGE W/O DUCT BURNER
LA-0257	SABINE PASS LNG TERMINAL	12/06/2011 ACT	Simple Cycle Refrigeration Compressor Turbines (16)	286	MMBTU/H	Volatile Organic Compounds (VOC)	Good combustion practices and fueled by natural gas	0.66	LB/H	HOURLY MAXIMUM
LA-0257	SABINE PASS LNG TERMINAL	12/06/2011 ACT	Combined Cycle Refrigeration Compressor Turbines (8)	286	MMBTU/H	Volatile Organic Compounds (VOC)	Good combustion practices and fueled by natural gas	0.66	LB/H	HOURLY MAXIMUM
LA-0257	SABINE PASS LNG TERMINAL	12/06/2011 ACT	Simple Cycle Generation Turbines (2)	286	MMBTU/H	Volatile Organic Compounds (VOC)	Good combustion practices and fueled by natural gas	0.66	LB/H	HOURLY MAXIMUM
LA-0331	CALCASIEU PASS LNG PROJECT	09/21/2018 ACT	Combined Cycle Combustion Turbines (CCCT1 to CCCT5)	921	MM BTU/h	Volatile Organic Compounds (VOC)	Catalytic Oxidation, Proper Equipment Design and Good Combustion Practices.	1.1	PPMV	3 HOUR AVERAGE
LA-0331	CALCASIEU PASS LNG PROJECT	09/21/2018 ACT	Aeroderivative Simple Cycle Combustion Turbine	263	MM BTU/h	Volatile Organic Compounds (VOC)	Proper Equipment Design, Proper Operation, and Good Combustion Practices.	1.5	PPMV	3 HOUR AVERAGE
LA-0331	CALCASIEU PASS LNG PROJECT	09/21/2018 ACT	Simple Cycle Combustion Turbines (SCCT1 to SCCT3)	927	MM BTU/h	Volatile Organic Compounds (VOC)	Proper Equipment Design, Proper Operation, and Good Combustion Practices.	1.4	PPMV	3 HOUR AVERAGE
MA-0039	SALEM HARBOR STATION REDEVELOPMENT	01/30/2014 ACT	Combustion Turbine with Duct Burner	2449	MMBTU/H	Volatile Organic Compounds (VOC)	Oxidation catalyst	1	PPMVD@15% O2	1 HR AVG EXCLUDING SS/NO DUCT FIRING
MD-0041	CPV ST. CHARLES	04/23/2014 ACT	2 COMBINED-CYCLE COMBUSTION TURBINES	725	MEGAWATT	Volatile Organic Compounds (VOC)	OXIDATION CATALYST AND GOOD COMBUSTION PRACTICES	1	PPMVD @ 15% O2	3-HOUR BLOCK AVERAGE, EXCLUDING SU/SD
MD-0041	CPV ST. CHARLES	04/23/2014 ACT	2 COMBINED CYCLE COMBUSTION TURBINES, WITH DUCT FIRING	725	MW	Volatile Organic Compounds (VOC)	EXCLUSIVE USE OF NATURAL GAS, AND AN OXIDATION CATALYST	2	PPMVD @ 15% O2	3-HOUR BLOCK AVERAGE, EXCLUDING SU/SD
*MD-0042	WILDCAT POINT GENERATION FACILITY	04/08/2014 ACT	2 COMBINED CYCLE COMBUSTION TURBINES, WITH DUCT FIRING	1000	MW	Volatile Organic Compounds (VOC)	USE OF PIPELINE NATURAL GAS, GOOD COMBUSTION PRACTICES, AND USE OF AN OXIDATION CATA	1.6	PPMVD @ 15% O2	3-HOUR BLOCK AVERAGE, EXCLUDING SU/SD
MD-0045	MATTAWOMAN ENERGY CENTER	11/13/2015 ACT	2 COMBINED-CYCLE COMBUSTION TURBINES - COLD STARTUP	286	MW	Volatile Organic Compounds (VOC)	OXIDATION CATALYST AND GOOD COMBUSTION PRACTICES	301	LB/EVENT	COLD STARTUP
MD-0045	MATTAWOMAN ENERGY CENTER	11/13/2015 ACT	2 COMBINED-CYCLE COMBUSTION TURBINES	286	MW	Volatile Organic Compounds (VOC)	OXIDATION CATALYST AND GOOD COMBUSTION PRACTICES	1	PPMVD @ 15% O2	3-HR BLOCK AVG. W/OUT DUCT FIRING
MD-0045	MATTAWOMAN ENERGY CENTER	11/13/2015 ACT	2 COMBINED-CYCLE COMBUSTION TURBINES - WARM STARTUP	286	MW	Volatile Organic Compounds (VOC)	OXIDATION CATALYST AND GOOD COMBUSTION PRACTICES	258	LB/EVENT	WARM STARTUP
MD-0045	MATTAWOMAN ENERGY CENTER	11/13/2015 ACT	2 COMBINED-CYCLE COMBUSTION TURBINES - HOT STARTUP	286	MW	Volatile Organic Compounds (VOC)	OXIDATION CATALYST AND GOOD COMBUSTION PRACTICES	207	LB/EVENT	HOT STARTUP
MD-0045	MATTAWOMAN ENERGY CENTER	11/13/2015 ACT	2 COMBINED-CYCLE COMBUSTION TURBINES - SHUTDOWN	286	MW	Volatile Organic Compounds (VOC)	GOOD COMBUSTION PRACTICES AND OXIDATION CATALYST	63	LB/EVENT	SHUTDOWN
MD-0046	KEYS ENERGY CENTER	10/31/2014 ACT	2 COMBINED-CYCLE COMBUSTION TURBINES	235	MW	Volatile Organic Compounds (VOC)	OXIDATION CATALYST AND GOOD COMBUSTION PRACTICES	1	PPMVD @ 15% O2	W/OUT DUCT FIRING, 3-HR BLOCK AVG
MD-0046	KEYS ENERGY CENTER	10/31/2014 ACT	2 COMBINED-CYCLE COMBUSTION TURBINES - COLD STARTUP	235	MW	Volatile Organic Compounds (VOC)	OXIDATION CATALYST AND GOOD COMBUSTION PRACTICES	164	LB/EVENT	COLD STARTUP
MD-0046	KEYS ENERGY CENTER	10/31/2014 ACT	2 COMBINED-CYCLE COMBUSTION TURBINES - WARM STARTUP	235	MW	Volatile Organic Compounds (VOC)	OXIDATION CATALYST AND GOOD COMBUSTION PRACTICES	63	LB/EVENT	WARM STARTUP
MD-0046	KEYS ENERGY CENTER	10/31/2014 ACT	2 COMBINED-CYCLE COMBUSTION TURBINES - HOT STARTUP	235	MW	Volatile Organic Compounds (VOC)	OXIDATION CATALYST AND GOOD COMBUSTION PRACTICES	52.6	LB/EVENT	HOT STARTUP
MD-0046	KEYS ENERGY CENTER	10/31/2014 ACT	2 COMBINED-CYCLE COMBUSTION TURBINES - SHUTDOWN	235	MW	Volatile Organic Compounds (VOC)	OXIDATION CATALYST AND GOOD COMBUSTION PRACTICES	12	LB/EVENT	SHUTDOWN
MI-0405	MIDLAND COGENERATION VENTURE	04/23/2013 ACT	Natural gas fueled combined cycle combustion turbine generators (CTG) with HRSG	2237	MMBTU/H	Volatile Organic Compounds (VOC)	Good combustion practices	0.0018	LB/MMBTU	EACH CTG; TEST PROTOCOL
MI-0405	MIDLAND COGENERATION VENTURE	04/23/2013 ACT	Natural gas fueled combined cycle combustion turbine generators (CTG) with HRSG and duct burner (DB)	2486	MMBTU/H	Volatile Organic Compounds (VOC)	Good combustion practices	0.004	LB/MMBTU	TEST PROTOCOL
MI-0406	RENAISSANCE POWER LLC	11/01/2013 ACT	FG-CTG1-4 Natural gas fueled combined cycle combustion turbine generators (CTG)	2147	MMBTU/H	Volatile Organic Compounds (VOC)	Catalytic oxidation system (COS)	2	PPMVOL	DRY AT 15% OXYGEN
MI-0406	RENAISSANCE POWER LLC	11/01/2013 ACT	FG-CTG/DB1-4 Natural gas fueled combined cycle combustion turbine generators; duct burner on HRSG	2807	MMBTU/H	Volatile Organic Compounds (VOC)	Catalytic oxidation system (COS)	2	PPMVOL	DRY AT 15% OXYGEN
MI-0410	THETFORD GENERATING STATION	07/25/2013 ACT	FG-PEAKERS: 2 natural gas fired simple cycle combustion turbines	171	MMBTU/H	Volatile Organic Compounds (VOC)	Efficient combustion; natural gas fuel.	0.017	LB/MMBTU	TEST PROTOCOL WILL SPECIFY AVG. TIME.
MI-0432	NEW COVERT GENERATING FACILITY	07/30/2018 ACT	FG-TURB/DB1-3 (3 combined cycle combustion turbine and heat recovery steam generator trains)	1230	MW	Volatile Organic Compounds (VOC)	An oxidation catalyst and good combustion practices.	1	PPMVD	HOURLY; EACH CT/HRSG TRAIN
MI-0433	MEC NORTH, LLC AND MEC SOUTH LLC	06/29/2018 ACT	EUCTGHRSG (South Plant): A combined cycle natural gas-fired combustion turbine generator with heat recove	500	MW	Volatile Organic Compounds (VOC)	Oxidation catalyst technology and good combustion practices.	4	PPMVD	AT 15%O2; NOT INCL. STARTUP/SHUTDOWN
MI-0433	MEC NORTH, LLC AND MEC SOUTH LLC	06/29/2018 ACT	EUCTGHRSG (North Plant): A combined-cycle natural gas-fired combustion turbine generator with heat recove	500	MW	Volatile Organic Compounds (VOC)	Oxidation catalyst technology and good combustion practices.	4	PPMVD	AT 15%O2; HOURLY
*MI-0441	LBWL - ERICKSON STATION	12/21/2018 ACT	EUCTGHRSG1 - A 667 MMBTU/H NG fired combustion turbine generator coupled with a heat recovery steam g	667	MMBTU/H	Volatile Organic Compounds (VOC)	An oxidation catalyst for VOC control for each CTG/HRSG units, good combustion practices.	3	PPM	PPMVD@15%O2; HOURLY EXC.START/SHUT; NOTE
NJ-0079	WOODBRIDGE ENERGY CENTER	07/25/2012 ACT	Combined Cycle Combustion Turbine with Duct Burner	40297.6	mmcubic ft/year	Volatile Organic Compounds (VOC)	oxidation Catalyst and Good Combustion Practices and use of Clean fuel (Natural gas)	2	PPMVD	3-HR ROLLING AVERAGE BASED ON 1-HR BLK
NJ-0079	WOODBRIDGE ENERGY CENTER	07/25/2012 ACT	Combined Cycle Combustion Turbine w/o duct burner	40297.6	mmcubic ft/year	Volatile Organic Compounds (VOC)	Oxidation catalyst and good combustion practices, use of natural gas a clean burning fuel	2.9	LB/H	AVERAGE OF THREE TESTS
NJ-0080	HESS NEWARK ENERGY CENTER	11/01/2012 ACT	Combined cylce turbine with duct burner	39463	mmcubic ft/year*	Volatile Organic Compounds (VOC)	Oxidation catalyst	1	PPMVD	3-HR ROLLING AVERAGE BASED ON 1-HR BLOCK
NJ-0080	HESS NEWARK ENERGY CENTER	11/01/2012 ACT	Combined Cycle Combustion Turbine	39463	MMCubic ft/yr	Volatile Organic Compounds (VOC)	Oxidation Catalyst and Good combustion Practices and use of natural gas a clean burning fuel	2.9	LB/H	AVERAGE OF THREE TESTS
NJ-0081	PSEG FOSSIL LLC SEWAREN GENERATING STATION	03/07/2014 ACT	Combined Cycle Combustion Turbine -Siemens turbine without Duct Burner	33691	MMCF/YR	Volatile Organic Compounds (VOC)	Good Combustion Practices and use of Natural gas as a clean burning fuel	1	PPMVD@ 15%O2	AVERAGE OF THREE TESTS
NJ-0081	PSEG FOSSIL LLC SEWAREN GENERATING STATION	03/07/2014 ACT	COMBINED CYCLE COMBUSTION TURBINE WITH DUCT BURNER - SIEMENS	33691	MMCF/YR	Volatile Organic Compounds (VOC)	Oxidation catalyst and pollution prevention (use of natural gas a clean burning fuel)	2	PPMVD	AVERAGE OF THREE ONE HOUR TESTS
NJ-0081	PSEG FOSSIL LLC SEWAREN GENERATING STATION	03/07/2014 ACT	COMBINED CYCLE COMBUSTION TURBINE WITH DUCT BURNER - GENERAL ELECTRIC	33691	MMCF/YR	Volatile Organic Compounds (VOC)	CO Oxidation Catalyst and good combustion practices and use natural gas only as a clean burning fu	2	PPMVD@15%O2	AVERAGE OF THREE ONE HOUR TESTS
NJ-0081	PSEG FOSSIL LLC SEWAREN GENERATING STATION	03/07/2014 ACT	COMBINED CYCLE COMBUSTION TURBINE WITHOUT DUCT BURNER - GENERAL ELECTRIC	33691	MMCF/YR	Volatile Organic Compounds (VOC)	Oxidation Catalyst and use of natural gas a clean burning fuel	1	PPMVD@15%O2	AVERAGE OF THREE ONE-HOUR TESTS
NJ-0082	WEST DEPTFORD ENERGY STATION	07/18/2014 ACT	Combined Cycle Combustion Turbine without Duct Burner	20282	MMCF/YR	Volatile Organic Compounds (VOC)	Oxidation catalysts and use of Natural gas a clean burning fuel	0.7	PPMVD 15%O2	AVERAGE OF THREE ONE HOUR STACK TESTS
NJ-0082	WEST DEPTFORD ENERGY STATION	07/18/2014 ACT	Combined Cycle Combustion Turbine with Duct Burner	20282	MMCF/YR	Volatile Organic Compounds (VOC)	Oxidation catalyst and use of natural gas a clean burning fuel	1	PPMVD@15%O2	AVERAGE OF THREE STACK TEST RUNS
NJ-0085	MIDDLESEX ENERGY CENTER, LLC	07/19/2016 ACT	Combined Cycle Combustion Turbine firing Natural Gas with Duct Burner	4000	ft/yr	Volatile Organic Compounds (VOC)	Oxidation Catalyst and good combustion practices	2	PPMVD@15%O2	AV OF THREE ONE HSTACK TESTS EVERY 5 YR
NJ-0085	MIDDLESEX ENERGY CENTER, LLC	07/19/2016 ACT	Combined Cycle Combustion Turbine firing Natural Gas without Duct Burner	8040	H/YR	Volatile Organic Compounds (VOC)	Oxidation catalyst and good combustion practices	1	PPMVD@15%O2	AV OF THREE ONE HSTACK TESTS EVERY 5 YR
NJ-0085	MIDDLESEX ENERGY CENTER, LLC	07/19/2016 ACT	COMBINED CYCLE COMBUSTION TURBINE FIRING ULTRA LOW SULFUR DISTILLATE OIL	720	H/YR	Volatile Organic Compounds (VOC)	oxidation catalyst and good combustion practices	2	PPMVD@15%O2	AV OF THREE ONE HSTACK TESTS EVERY 5 YR
NY-0104	CPV VALLEY ENERGY CENTER	08/01/2013 ACT	Turbines - diesel fuel	0		Volatile Organic Compounds (VOC)	Good combustion practice and oxidation catalyst.	0.7	PPMVD @ 15% O2	1 H
NY-0104	CPV VALLEY ENERGY CENTER	08/01/2013 ACT	Turbines and duct burners - NG	0		Volatile Organic Compounds (VOC)	Good combustion practice and oxidation catalyst.	0.7	PPMVD @ 15% O2	1 H
OH-0352	OREGON CLEAN ENERGY CENTER	06/18/2013 ACT	2 Combined Cycle Combustion Turbines-Siemens, without duct burners	515600	MMSCF/rolling 12-months	Volatile Organic Compounds (VOC)	oxidation catalyst	3.9	LB/H	
OH-0352	OREGON CLEAN ENERGY CENTER	06/18/2013 ACT	2 Combined Cycle Combustion Turbines-Siemens, with duct burners	51560	MMSCF/rolling 12-MO	Volatile Organic Compounds (VOC)	oxidation catalyst	5.9	LB/H	
OH-0352	OREGON CLEAN ENERGY CENTER	06/18/2013 ACT	2 Combined Cycle Combustion Turbines-Mitsubishi, without duct burners	47917	MMSCF/rolling 12-MO	Volatile Organic Compounds (VOC)	oxidation catalyst	7.9	LB/H	
OH-0352	OREGON CLEAN ENERGY CENTER	06/18/2013 ACT	2 Combined Cycle Combustion Turbines-Mitsubishi, with duct burners	47917	MMSCF/rolling 12-MO	Volatile Organic Compounds (VOC)	oxidation catalyst	7.3	LB/H	
OH-0356	DUKE ENERGY HANGING ROCK ENERGY	12/18/2012 ACT	Turbines (4) (model GE 7FA) Duct Burners Off	172	MW	Volatile Organic Compounds (VOC)	Using efficient combustion technology	3.2	LB/H	
OH-0356	DUKE ENERGY HANGING ROCK ENERGY	12/18/2012 ACT	Turbines (4) (model GE 7FA) Duct Burners On	172	MW	Volatile Organic Compounds (VOC)	Using efficient combustion technology	7.3	LB/H	
OH-0360	CARROLL COUNTY ENERGY	11/05/2013 ACT	Combined Cycle Combustion Turbines (two, identical) (P001 and P002)	2045	MMBTU/H	Volatile Organic Compounds (VOC)	oxidation catalyst	7.1	LB/H	WITH DUCT BURNER. SEE NOTES.
OH-0365	ROLLING HILLS GENERATING, LLC	05/20/2015 ACT	Combustion Turbines, Scenario 1 (4, identical) (P001, P002, P004, P005)	2022	MMBTU/H	Volatile Organic Compounds (VOC)	good combustion practices along with clean fuels	611.38	T/YR	PER ROLLING 12 MONTH PERIOD. SEE NOTES.
OH-0365	ROLLING HILLS GENERATING, LLC	05/20/2015 ACT	Combustion Turbines, Scenario 2 (4, identical) (P001, P002, P004, P005)	2144	MMBTU/H	Volatile Organic Compounds (VOC)	good combustion practices along with clean fuels	0		
OH-0366	CLEAN ENERGY FUTURE - LORDSTOWN, LLC	08/25/2015 ACT	Combined Cycle Combustion Turbines (two, identical) (P001 and P002)	2725	MMBTU/H	Volatile Organic Compounds (VOC)	Good combustion controls and oxidation catalyst	8.2	LB/H	WITH DUCT BURNER. SEE NOTES.
OH-0367	SOUTH FIELD ENERGY LLC	09/23/2016 ACT	Combined Cycle Combustion Turbines (two, identical) (P001 and P002)	3131	MMBTU/H	Volatile Organic Compounds (VOC)	Good combustion controls and oxidation catalyst	10.64	LB/H	WITH DUCT BURNER. SEE NOTES.
OH-0370	TRUMBULL ENERGY CENTER	09/07/2017 ACT	Combined Cycle Combustion Turbines (two, identical) (P001 and P002)	3025	MMBTU/H	Volatile Organic Compounds (VOC)	Good combustion controls and oxidation catalyst	8.8	LB/H	WITH DUCT BURNER. SEE NOTES.
OH-0372	OREGON ENERGY CENTER	09/27/2017 ACT	Combined Cycle Combustion Turbines (two, identical) (P001 and P002)	3055	MMBTU/H	Volatile Organic Compounds (VOC)	oxidation catalyst and good combustion control	8.8	LB/H	WITH DUCT BURNER. SEE NOTES.
OH-0374	GUERNSEY POWER STATION LLC	10/23/2017 ACT	Combined Cycle Combustion Turbines (3, identical) (P001 to P003)	3516	MMBTU/H	Volatile Organic Compounds (VOC)	oxidation catalyst and good combustion practices as recommended by the manufacturer	11.73	LB/H	WITH DUCT BURNER. SEE NOTES.
OH-0375	LONG RIDGE ENERGY GENERATION LLC - HANNIBAL POWE	11/07/2017 ACT	General Electric Combustion Turbine (P004)	3544	MMBTU/H	Volatile Organic Compounds (VOC)	Oxidation catalyst and good combustion practices as recommended by the manufacturer.	4.54	LB/H	EXCEPT STARTUP AND SHUTDOWN. SEE NOTES
OH-0375	LONG RIDGE ENERGY GENERATION LLC - HANNIBAL POWE	11/07/2017 ACT	Mitsubishi Combustion Turbine (P005)	3320	MMBTU/H	Volatile Organic Compounds (VOC)	oxidation catalyst and shall operate the emissions unit in accordance with good combustion practice	8.8	LB/H	WITH DUCT BURNER. SEE NOTES.
OH-0375	LONG RIDGE ENERGY GENERATION LLC - HANNIBAL POWE	11/07/2017 ACT	Siemens Combustion Turbine (P006)	3602	MMBTU/H	Volatile Organic Compounds (VOC)	oxidation catalyst and shall operate the emissions unit in accordance with good combustion practice	9.5	LB/H	WITH DUCT BURNER. SEE NOTES.
OH-0377	HARRISON POWER	04/19/2018 ACT	General Electric (GE) Combustion Turbines (P005 & P006)	3459.6	MMBTU/H	Volatile Organic Compounds (VOC)	Good combustion practices and oxidation catalyst	4.36	LB/H	WITH DUCT BURNER. SEE NOTES.
OH-0377	HARRISON POWER	04/19/2018 ACT	Mitsubishi Hitachi Power Systems (MHPS) Combustion Turbines (P007 & P008)	3231	MMBTU/H	Volatile Organic Compounds (VOC)	Good combustion practices and oxidation catalyst	9.8	LB/H	WITH DUCT BURNER. SEE NOTES.
OK-0154	MOORELAND GENERATING STA	07/02/2013 ACT	Combustion Turbine	360	MW	Volatile Organic Compounds (VOC)	Oxidation catalyst and good combustion practices.	5	PPMVD@15%O2	30-DAY
OK-0154	MOORELAND GENERATING STA	07/02/2013 ACT	COMBUSTION TURBINE	360	MW	Volatile Organic Compounds (VOC)	OXIDATION CATALYST AND GOOD COMBUSTION PRACTICES.	5	PPMVD@15% O2	30-DAY
OR-0050	TROUTDALE ENERGY CENTER, LLC	03/05/2014 ACT	Mitsubishi M501-GAC combustion turbine, combined cycle configuration with duct burner.	2988	MMBTU/H	Volatile Organic Compounds (VOC)	Oxidation catalyst;	2	PPMDV AT 15% O2	3-HR ROLLING AVERAGE ON NG

OR-0050	TROUTDALE ENERGY CENTER, LLC	03/05/2014 ACT	GE LMS-100 combustion turbines, simple cycle with water injection	1690	MMBTU/H	Volatile Organic Compounds (VOC)	Oxidation catalyst;	0		
PA-0278	MOXIE LIBERTY LLC/ASYLUM POWER PLT	10/10/2012 ACT	Combined-cycle Turbines (2) - Natural gas fired	3277	MMBTU/H	Volatile Organic Compounds (VOC)	Oxidation Catalyst	1	PPMVD	WITHOUT DUCT BURNER
PA-0288	SUNBURY GENERATION LP/SUNBURY SES	04/01/2013 ACT	Combined Cycle Combustion Turbine AND DUCT BURNER (3)	2538000	MMBTU/H	Volatile Organic Compounds (VOC)	Oxidation Catalyst	1	PPM	3 LB/HR, DUCT BURN NOT OPERATING, 15% O2
PA-0296	BERKS HOLLOW ENERGY ASSO C LLC/ONTELAUNEE	12/17/2013 ACT	Turbine, Combined Cycle, #1 and #2	3046	MMBTU/H	Volatile Organic Compounds (VOC)		93.85	T/YR	12-MONTH ROLLING TOTAL
*PA-0298	FUTURE POWER PA/GOOD SPRINGS NGCC FACILITY	03/04/2014 ACT	Turbine, COMBINED CYCLE UNIT (Siemens 5000)	2267	MMBTU/H	Volatile Organic Compounds (VOC)	CO Catalyst	2	PPMVD	@ 15% OXYGEN
PA-0306	TENASKA PA PARTNERS/WESTMORELAND GEN FAC	02/12/2016 ACT	Large Combustion turbine	0		Volatile Organic Compounds (VOC)	Ox Cat and good combustion practices	1.4	PPMVD @ 15% O2	
PA-0306	TENASKA PA PARTNERS/WESTMORELAND GEN FAC	02/12/2016 ACT	Large combustion turbine	0		Volatile Organic Compounds (VOC)	Ox Cat and good combustion practices	2.4	PPMDV@15% O2	
PA-0307	YORK ENERGY CENTER BLOCK 2 ELECTRICITY GENERATION	06/15/2015 ACT	Two combined cycle turbines with out duct burner	2291.64	MCF/hr	Volatile Organic Compounds (VOC)	Oxidation catalyst, good combustion practices and low sulfur fuels	1.5	PPMDV @ 15% O2	
PA-0307	YORK ENERGY CENTER BLOCK 2 ELECTRICITY GENERATION	06/15/2015 ACT	Two combined cycle combustion turbines ULSD fired with duct burner NG fired	0		Volatile Organic Compounds (VOC)	Oxidation catalyst, good combustion practices and low sulfur fuels	1.9	PPMDV @ 15% O2	
PA-0307	YORK ENERGY CENTER BLOCK 2 ELECTRICITY GENERATION	06/15/2015 ACT	Two Combine Cycle Combustion Turbine with Duct Burner	3001.57	MCF/hr	Volatile Organic Compounds (VOC)	Oxidation catalyst, good combustion practices and low sulfur fuels	1.9	PPMDV @ 15% O2	
PA-0309	LACKAWANNA ENERGY CTR/JESSUP	12/23/2015 ACT	Combustion turbine with duct burner	3304.3	MMBtu/hr	Volatile Organic Compounds (VOC)	Oxidation catalyst, combustion controls, exclusive natural gas	1.5	PPMDV @ 15% O2	
PA-0309	LACKAWANNA ENERGY CTR/JESSUP	12/23/2015 ACT	Combustion turbine without duct burner	0		Volatile Organic Compounds (VOC)	Oxidation catalyst, combustion controls, exclusive natural gas	1	PPNDV @ 15% O2	
PA-0310	CPV FAIRVIEW ENERGY CENTER	09/02/2016 ACT	Combustion turbine and HRSG with duct burner NG only	3338	MMBtu/hr	Volatile Organic Compounds (VOC)	Oxidation catalyst and good combustion practices	1.5	PPMDV @ 15% O2	
PA-0310	CPV FAIRVIEW ENERGY CENTER	09/02/2016 ACT	Combustion turbine and HRSG without duct burner NG only	0		Volatile Organic Compounds (VOC)		1	PPMDV @ 15% O2	
PA-0310	CPV FAIRVIEW ENERGY CENTER	09/02/2016 ACT	Combustion turbine and HRSG without duct burner ULSD	0		Volatile Organic Compounds (VOC)	Oxidation catalyst, water/steam injection, good combustion practices	2	PPMDV @ 15% O2	
PA-0310	CPV FAIRVIEW ENERGY CENTER	09/02/2016 ACT	Combustion turbine and HRSG with duct burner - firing NG blend with ethane	0		Volatile Organic Compounds (VOC)		0		
PA-0310	CPV FAIRVIEW ENERGY CENTER	09/02/2016 ACT	Combustion turbine and HRSG without duct burner - firing NG blend with ethane	0		Volatile Organic Compounds (VOC)		0		
PA-0311	MOXIE FREEDOM GENERATION PLANT	09/01/2015 ACT	Combustion Turbine With Duct Burner	3727	MMBtu/hr	Volatile Organic Compounds (VOC)	Oxidation catalyst and good engineering practice	1.5	PPMDV @ 15% O2	
PA-0311	MOXIE FREEDOM GENERATION PLANT	09/01/2015 ACT	Combustion Turbine without Duct Burner	0		Volatile Organic Compounds (VOC)	Oxidation catalyst, and good engineering practice	1.5	LB/MMBTU	
*PA-0315	HILLTOP ENERGY CENTER, LLC	04/12/2017 ACT	Combustion Turbine without Duct Burner	3509	MMBtu/hr	Volatile Organic Compounds (VOC)		1	PPMDV	CORRECTED TO 15% O2
*PA-0315	HILLTOP ENERGY CENTER, LLC	04/12/2017 ACT	Combustion Turbine With Duct Burner	4367	MMBtu/hr	Volatile Organic Compounds (VOC)		2	PPMDV	CORRECTED TO 15% O2
*PA-0316	RENOVO ENERGY CENTER, LLC	01/26/2018 ACT	Combustion Turbine Firing NG	0		Volatile Organic Compounds (VOC)		1	PPMDV	CORRTECTED TO 15% O2
*PA-0316	RENOVO ENERGY CENTER, LLC	01/26/2018 ACT	Cobustion Turbine firing ULSD	0		Volatile Organic Compounds (VOC)		2	PPMDV	CORRECTED TO 15% O2
*PA-0319	RENAISSANCE ENERGY CENTER	08/27/2018 ACT	COMBUSTION TURBINE UNIT w/o DUCT BURNERS UNIT	2665.9	MMBtu/hr	Volatile Organic Compounds (VOC)	Oxidation Catalyst	1	PPMDV	@15% O2
*PA-0319	RENAISSANCE ENERGY CENTER	08/27/2018 ACT	COMBUSTION TURBINE UNIT with DUCT BURNERS UNIT	0		Volatile Organic Compounds (VOC)		1.4	PPMDV	@15% O2
TX-0590	KING POWER STATION	08/05/2010 ACT	Turbine	1350	MW	Volatile Organic Compounds (VOC)	DLN burners in combination with an oxidation catalyst	1.8	PPMVD AT 15% O2	THREE-HOUR ROLLING AVERAGE
TX-0600	THOMAS C. FERGUSON POWER PLANT	09/01/2011 ACT	Natural gas-fired turbines	390	MW	Volatile Organic Compounds (VOC)	Natural gas, good combustion practices and oxidation catalyst	2	PPMVD	3-HR AT 15% OXYGEN
TX-0618	CHANNEL ENERGY CENTER LLC	10/15/2012 ACT	Combined Cycle Turbine	180	MW	Volatile Organic Compounds (VOC)	Good combustion	2	PPMVD	@15% O2
TX-0619	DEER PARK ENERGY CENTER	09/26/2012 ACT	Combined Cycle Turbine	180	MW	Volatile Organic Compounds (VOC)	good combustion, use of natural gas	2	PPMVD	@15% O2
TX-0620	ES JOSLIN POWER PLANT	09/12/2012 ACT	Combined cycle gas turbine	195	MW	Volatile Organic Compounds (VOC)	good combustion and natural gas as fuel	2	PPMVD	@15% O2
TX-0641	PINECREST ENERGY CENTER	11/12/2013 ACT	combined cycle turbine	700	MW	Volatile Organic Compounds (VOC)	oxidation catalyst	2	PPMVD	INITIAL STACK TEST, 15% OXYGEN
*TX-0660	FGE TEXAS POWER I AND FGE TEXAS POWER II	03/24/2014 ACT	Alstom Turbine	230.7	MW	Volatile Organic Compounds (VOC)	Oxidation catalyst, good combustion practices	2	PPMVD	CORRECTED TO 15% O2, ROLLING 3 HR AVE
TX-0672	CORPUS CHRISTI LIQUEFACTION PLANT	09/12/2014 ACT	Refrigeration compressor turbines	40000	hp	Volatile Organic Compounds (VOC)	good combustion practices	0.6	LB/H	1 HOUR
TX-0672	CORPUS CHRISTI LIQUEFACTION PLANT	09/12/2014 ACT	Refrigeration compressor turbines	40000	hp	Volatile Organic Compounds (VOC)	good combustion practices	0.6	LB/H	1 HOUR
TX-0678	FREEPORT LNG PRETREATMENT FACILITY	07/16/2014 ACT	Combustion Turbine	87	MW	Volatile Organic Compounds (VOC)	oxidation catalyst	2	PPMVD	1 HOUR BASED ON STACK TEST
TX-0708	LA PALOMA ENERGY CENTER	02/07/2013 ACT	(2) combined cycle turbines	650	MW	Volatile Organic Compounds (VOC)	oxidation catalyst	2	PPMVD	@15% O2, 3-HR ROLLING
TX-0709	SAND HILL ENERGY CENTER	09/13/2013 ACT	Natural gas-fired combined cycle turbines	173.9	MW	Volatile Organic Compounds (VOC)		2	PPM	1HR. AVG.
TX-0710	VICTORIA POWER STATION	12/01/2014 ACT	combined cycle turbine	197	MW	Volatile Organic Compounds (VOC)	oxidation catalyst	4	PPMVD	@15% O2, 3-HR ROLLING AVERAGE
TX-0712	TRINIDAD GENERATING FACILITY	11/20/2014 ACT	combined cycle turbine	497	MW	Volatile Organic Compounds (VOC)	oxidation catalyst	4	PPMVD	@15% O2 1-HR
TX-0713	TENASKA BROWNSVILLE GENERATING STATION	04/29/2014 ACT	(2) combined cycle turbines	274	MW	Volatile Organic Compounds (VOC)	oxidation catalyst	2	PPMVD	@15% O2, 3-HR AVERAGE
TX-0714	S R BERTRON ELECTRIC GENERATING STATION	12/19/2014 ACT	(2) combined cycle turbines	240	MW	Volatile Organic Compounds (VOC)	oxidation catalyst	1	PPMVD	@15% O2
TX-0730	COLORADO BEND ENERGY CENTER	04/01/2015 ACT	Combined-cycle gas turbine electric generating facility	1100	MW	Volatile Organic Compounds (VOC)	SCR and oxidation catalyst	4	PPMVD @ 15% O2	3-HR AVERAGE
TX-0751	EAGLE MOUNTAIN STEAM ELECTRIC STATION	06/18/2015 ACT	Combined Cycle Turbines (> 25 MW) â€“ natural gas	210	MW	Volatile Organic Compounds (VOC)	Oxidation catalyst	2	PPM	
TX-0767	LON C. HILL POWER STATION	10/02/2015 ACT	Combined Cycle Turbines (> 25 MW)	195	MW	Volatile Organic Compounds (VOC)	oxidation catalyst	2	PPM	
TX-0773	FGE EAGLE PINES PROJECT	11/04/2015 ACT	Combined Cycle Turbines (> 25 MW)	321	MW	Volatile Organic Compounds (VOC)	Oxidation Catalyst	2	PPM	
TX-0788	NECHES STATION	03/24/2016 ACT	Large Combustion Turbines > 25 MW	232	MW	Volatile Organic Compounds (VOC)	good combustion practices	2	PPM	
TX-0790	PORT ARTHUR LNG EXPORT TERMINAL	02/17/2016 ACT	Refrigeration Compression Turbines	10	M TONNES/YR	Volatile Organic Compounds (VOC)	Dry low NOx burners and good combustion practices	2	PPM	3-HR AVG
TX-0790	PORT ARTHUR LNG EXPORT TERMINAL	02/17/2016 ACT	Simple Cycle Electrical Generation Gas Turbines 15.2.10	34	MW	Volatile Organic Compounds (VOC)	OXIDATION CATALYST	2	PPM	3-HR AVERAGE
TX-0819	GAINES COUNTY POWER PLANT	04/28/2017 ACT	Simple Cycle Turbine	227.5	MW	Volatile Organic Compounds (VOC)	Pipeline quality natural gas; limited hours; good combustion practices	2	PPMVD	145% O2
TX-0819	GAINES COUNTY POWER PLANT	04/28/2017 ACT	Combined Cycle Turbine with Heat Recovery Steam Generator, fired Duct Burners, and Steam Turbine Genera	426	MW	Volatile Organic Compounds (VOC)	Oxidation catalyst and good combustion practices	3.5	PPMVD	15% O2
TX-0834	MONTGOMERY COUNTY POWER STATIOIN	03/30/2018 ACT	Combined Cycle Turbine	2635	MMBTU/HR/UNIT	Volatile Organic Compounds (VOC)	Oxidation catalyst	2	PPMVD	15% O2 3 HOUR AVERAGE
TX-0834	MONTGOMERY COUNTY POWER STATIOIN	03/30/2018 ACT	COMBINED CYCLE TURBINE MSS REDUCED LOAD	0		Volatile Organic Compounds (VOC)	minimizing duration of startup / shutdown events, engaging the pollution control equipment as soo	2000	LB/H	
VA-0315	WARREN COUNTY POWER PLANT - DOMINION	12/17/2010 ACT	COMBINED CYCLE TURBINE & DUCT BURNER, 3	2996	MMBTU/H	Volatile Organic Compounds (VOC)	Oxidation catalyst and good combustion practices.	2.6	LB/H	3 HR AVG. (WITHOUT DUCT BURNER FIRING)
VA-0321	BRUNSWICK COUNTY POWER STATION	03/12/2013 ACT	COMBUSTION TURBINE GENERATORS, (3)	3442	MMBTU/H	Volatile Organic Compounds (VOC)	Oxidation catalyst; good combustion practices.	0.7	PPMVD	3 HAVG/WITHOUT DUCT BURNING
VA-0325	GREENSVILLE POWER STATION	06/17/2016 ACT	COMBUSTION TURBINE GENERATOR WITH DUCT-FIRED HEAT RECOVERY STEAM GENERATORS (3)	3227	MMBTU/HR	Volatile Organic Compounds (VOC)	Oxidation Catalyst and good combustion practices	1.4	PPMVD	
VA-0328	C4GT, LLC	04/26/2018 ACT	GE Combustion Turbine - Option 1 - Normal Operation	34000	MMCF/YR	Volatile Organic Compounds (VOC)	Oxidation catalyst and good combustion practices	0.7	PPMVD @ 15% O2	3 HR AV/WITHOUT DB
VA-0328	C4GT, LLC	04/26/2018 ACT	Siemens Combusion Turbine - Option 2 - Normal Operation	35000	MMCF/YR	Volatile Organic Compounds (VOC)	Oxidation catalyst and good combustion practice	1	PPMVD @ 15% O2	3 H AV/WITHOUT DB
VA-0328	C4GT, LLC	04/26/2018 ACT	GE Combustion Turbine - Startup and Shutdown	34000	MMCF/YR	Volatile Organic Compounds (VOC)	Oxidation catalyst and good combustion practices	60	LB/TURBINE/EVENT	COLD START 60 MIN OR LESS
VA-0328	C4GT, LLC	04/26/2018 ACT	Siemens Combustion Turbine - Startup & Shutdown	35000	MMCF/YR	Volatile Organic Compounds (VOC)	Oxidation catalyst and good combustion practices	37	LB/TURBINE/EVENT	COLD START 55 MIN OR LESS
WV-0025	MOUNDSVILLE COMBINED CYCLE POWER PLANT	11/21/2014 ACT	Combined Cycle Turbine/Duct Burner	2419.61	mmBtu/Hr	Volatile Organic Compounds (VOC)	Oxidation Catalyst & Good Combustion Practices	5.3	LB/H	
*WV-0029	HARRISON COUNTY POWER PLANT	03/27/2018 ACT	GE 7HA.02 Turbine	3496.2	mmBtu/hr	Volatile Organic Compounds (VOC)	Oxidation Catalyst, Good Combustion Practices	11.4	LB/HR	
*WV-0032	BROOKE COUNTY POWER PLANT	09/18/2018 ACT	GE 7HA.01 Turbine	2737.7	mmBtu/hr	Volatile Organic Compounds (VOC)	Oxidation Catalyst, Good Combustion Practices	8.1	LB/HR	
WY-0070	CHEYENNE PRAIRIE GENERATING STATION	08/28/2012 ACT	Simple Cycle Turbine (EP03)	40	MW	Volatile Organic Compounds (VOC)	Oxidation Catalyst	3	PPMV AT 15% O2	3-HOUR AVERAGE
WY-0070	CHEYENNE PRAIRIE GENERATING STATION	08/28/2012 ACT	Combined Cycle Turbine (EP01)	40	MW	Volatile Organic Compounds (VOC)	Oxidation Catalyst	3	PPMV AT 15% O2	1-HOUR
WY-0070	CHEYENNE PRAIRIE GENERATING STATION	08/28/2012 ACT	Combined Cycle Turbine (EP02)	40	MW	Volatile Organic Compounds (VOC)	Oxidation Catalyst	3	PPMV AT 15% O2	3-HOUR AVERAGE
WY-0070	CHEYENNE PRAIRIE GENERATING STATION	08/28/2012 ACT	Simple Cycle Turbine (EP05)	40	MW	Volatile Organic Compounds (VOC)	Oxidation Catalyst	3	PPMV AT 15% O2	3-HOUR AVERAGE

						RBLC SUMMARY FOR COMBUSTION TURBINES - PM				
RBLCID	FACILITY_NAME	PERMIT_ISSUANCE_DATE	PROCESS_NAME	THROUGHPUT	THROUGHPUT_UNIT	POLLUTANT	CONTROL_METHOD_DESCRIPTION	EMISSION_LIMIT_1	EMISSION_LIMIT_1_UNIT	EMISSION_LIMIT_1_AVG_TIME_CONDITION
AK-0071	INTERNATIONAL STATION POWER PLANT	12/20/2010 ACT	GE LM6000PF-2S Turbines (4)	59900	hp ISO	Particulate matter, total (TPM)	Good Combustion Practices	0.0066	LB/MMBTU	3-HOUR AVERAGE
AK-0071	INTERNATIONAL STATION POWER PLANT	12/20/2010 ACT	GE LM6000PF-2S Turbines (4)	59900	hp ISO	Particulate matter, total < 10 µ (TPM10)	Good Combustion Practices	0.0066	LB/MMBTU	3-HOUR AVERAGE
AK-0071	INTERNATIONAL STATION POWER PLANT	12/20/2010 ACT	GE LM6000PF-2S Turbines (4)	59900	hp ISO	Particulate matter, total < 2.5 µ (TPM2.5)	Good Combustion Practices	0.0066	LB/MMBTU	3-HOUR AVERAGE
CA-1191	VICTORVILLE 2 HYBRID POWER PROJECT	08/11/2010 ACT	COMBUSTION TURBINE #2 (NORMAL OPERATION, NO DUCT BURNING)	154	MW	Particulate matter, total (TPM)	PUC QUALITY NATURAL GAS	12	LB/H	12-MONTH ROLLING AVG (NO DUCT BURNING)
CA-1191	VICTORVILLE 2 HYBRID POWER PROJECT	08/11/2010 ACT	COMBUSTION TURBINE #2 (NORMAL OPERATION, NO DUCT BURNING)	154	MW	Particulate matter, total < 2.5 µ (TPM2.5)	PUC QUALITY NATURAL GAS	12	LB/H	PUC QUALITY NATURAL GAS
CA-1191	VICTORVILLE 2 HYBRID POWER PROJECT	08/11/2010 ACT	COMBUSTION TURBINE #2 (NORMAL OPERATION, WITH DUCT BURNING)	154	MW	Particulate matter, total (TPM)	PUC QUALITY NATURAL GAS	18	LB/H	12-MONTH ROLLING AVG (W/ DUCT BURNING)
CA-1191	VICTORVILLE 2 HYBRID POWER PROJECT	08/11/2010 ACT	COMBUSTION TURBINE #2 (NORMAL OPERATION, WITH DUCT BURNING)	154	MW	Particulate matter, total < 2.5 µ (TPM2.5)	PUC QUALITY NATURAL GAS	18	LB/H	12-MONTH ROLLING AVG (W/ DUCT BURNING)
CA-1191	VICTORVILLE 2 HYBRID POWER PROJECT	08/11/2010 ACT	COMBUSTION TURBINE #1 (NORMAL OPERATION, NO DUCT BURNING)	154	MW	Particulate matter, total (TPM)	PUC QUALITY NATURAL GAS	12	LB/H	12-MONTH ROLLING AVG (NO DUCT BURNING)
CA-1191	VICTORVILLE 2 HYBRID POWER PROJECT	08/11/2010 ACT	COMBUSTION TURBINE #1 (NORMAL OPERATION, NO DUCT BURNING)	154	MW	Particulate matter, total < 2.5 µ (TPM2.5)	PUC QUALITY NATURAL GAS	12	LB/H	12-MONTH ROLLING AVG (NO DUCT BURNING)
CA-1191	VICTORVILLE 2 HYBRID POWER PROJECT	08/11/2010 ACT	COMBUSTION TURBINE #1 (NORMAL OPERATION, WITH DUCT BURNING)	154	MW	Particulate matter, total (TPM)	USE PUC QUALITY NATURAL GAS	18	LB/H	12-MONTH ROLLING AVG (W/ DUCT BURNING)
CA-1191	VICTORVILLE 2 HYBRID POWER PROJECT	08/11/2010 ACT	COMBUSTION TURBINE #1 (NORMAL OPERATION, WITH DUCT BURNING)	154	MW	Particulate matter, total < 2.5 µ (TPM2.5)	PUC QUALITY NATURAL GAS	18	LB/H	12-MONTH ROLLING AVG (W/ DUCT BURNING)
CA-1192	AVENAL ENERGY PROJECT	06/21/2011 ACT	COMBUSTION TURBINE #1 (NORMAL OPERATION, NO DUCT BURNING)	180	MW	Particulate matter, total (TPM)	USE PUC QUALITY NATURAL GAS	8.91	LB/H	12-MONTH ROLLING AVG
CA-1192	AVENAL ENERGY PROJECT	06/21/2011 ACT	COMBUSTION TURBINE #1 (NORMAL OPERATION, NO DUCT BURNING)	180	MW	Particulate matter, total < 10 µ (TPM10)	USE PUC QUALITY NATURAL GAS	8.91	LB/H	12-MONTH ROLLING AVG
CA-1192	AVENAL ENERGY PROJECT	06/21/2011 ACT	COMBUSTION TURBINE #1 (NORMAL OPERATION, WITH DUCT BURNING)	180	MW	Particulate matter, total (TPM)	USE PUC QUALITY NATURAL GAS	11.78	LB/H	12-MONTH ROLLING AVG
CA-1192	AVENAL ENERGY PROJECT	06/21/2011 ACT	COMBUSTION TURBINE #1 (NORMAL OPERATION, WITH DUCT BURNING)	180	MW	Particulate matter, total < 10 µ (TPM10)	USE PUC QUALITY NATURAL GAS	11.78	LB/H	12-MONTH ROLLING AVG
CA-1192	AVENAL ENERGY PROJECT	06/21/2011 ACT	COMBUSTION TURBINE #2 (NORMAL OPERATION, NO DUCT BURNING)	180	MW	Particulate matter, total (TPM)	USE PUC QUALITY NATURAL GAS	8.91	LB/H	12-MONTH ROLLING AVG
CA-1192	AVENAL ENERGY PROJECT	06/21/2011 ACT	COMBUSTION TURBINE #2 (NORMAL OPERATION, NO DUCT BURNING)	180	MW	Particulate matter, total < 10 µ (TPM10)	USE PUC QUALITY NATURAL GAS	8.91	LB/H	12-MONTH ROLLING AVG
CA-1192	AVENAL ENERGY PROJECT	06/21/2011 ACT	COMBUSTION TURBINE #2 (NORMAL OPERATION, WITH DUCT BURNING)	180	MW	Particulate matter, total (TPM)	USE PUC QUALITY NATURAL GAS	11.78	LB/H	12-MONTH ROLLING AVG
CA-1192	AVENAL ENERGY PROJECT	06/21/2011 ACT	COMBUSTION TURBINE #2 (NORMAL OPERATION, WITH DUCT BURNING)	180	MW	Particulate matter, total < 10 µ (TPM10)	USE PUC QUALITY NATURAL GAS	11.78	LB/H	12-MONTH ROLLING AVG
CA-1211	COLUSA GENERATING STATION	03/11/2011 ACT	COMBUSTION TURBINES (WARM STARTUP PERIODS)	172	MW	Particulate matter, total (TPM)	USE NATURAL GAS	12	LB/H	WARM STARTUP PERIODS
CA-1211	COLUSA GENERATING STATION	03/11/2011 ACT	COMBUSTION TURBINES (WARM STARTUP PERIODS)	172	MW	Particulate matter, total < 10 µ (TPM10)	USE NATURAL GAS	12	LB/H	WARM STARTUP PERIODS
CA-1211	COLUSA GENERATING STATION	03/11/2011 ACT	COMBUSTION TURBINES (HOT STARTUP PERIODS)	172	MW	Particulate matter, total (TPM)	USE NATURAL GAS	12	LB/H	HOT STARTUP PERIODS
CA-1211	COLUSA GENERATING STATION	03/11/2011 ACT	COMBUSTION TURBINES (HOT STARTUP PERIODS)	172	MW	Particulate matter, total < 10 µ (TPM10)	USE NATURAL GAS	12	LB/H	HOT STARTUP PERIODS
CA-1211	COLUSA GENERATING STATION	03/11/2011 ACT	COMBUSTION TURBINES (SHUTDOWN PERIODS)	172	MW	Particulate matter, total (TPM)	USE NATURAL GAS	6	LB/H	TURBINE SHUTDOWN PERIODS
CA-1211	COLUSA GENERATING STATION	03/11/2011 ACT	COMBUSTION TURBINES (SHUTDOWN PERIODS)	172	MW	Particulate matter, total < 10 µ (TPM10)	USE NATURAL GAS	6	LB/H	TURBINE SHUTDOWN PERIODS
CA-1211	COLUSA GENERATING STATION	03/11/2011 ACT	COMBUSTION TURBINES (NORMAL OPERATION)	172	MW	Particulate matter, total < 10 µ (TPM10)	USE NATURAL GAS	13.5	LB/H	STACK TEST
CA-1211	COLUSA GENERATING STATION	03/11/2011 ACT	COMBUSTION TURBINES (NORMAL OPERATION)	172	MW	Particulate matter, filterable (FPM)	USE NATURAL GAS	13.5	LB/H	STACK TEST
CA-1211	COLUSA GENERATING STATION	03/11/2011 ACT	COMBUSTION TURBINES (COLD STARTUP PERIODS)	172	MW	Particulate matter, filterable (FPM)	USE NATURAL GAS	12	LB/H	COLD STARTUP PERIODS
CA-1211	COLUSA GENERATING STATION	03/11/2011 ACT	COMBUSTION TURBINES (COLD STARTUP PERIODS)	172	MW	Particulate matter, total < 10 µ (TPM10)	USE NATURAL GAS	12	LB/H	COLD STARTUP PERIODS
CA-1212	PALMDALE HYBRID POWER PROJECT	10/18/2011 ACT	COMBUSTION TURBINES (NORMAL OPERATION)	154	MW	Particulate matter, total (TPM)	USE PUC QUALITY NATURAL GAS	0.0048	LB/MMBTU	9-HR AVG (NO DUCT BURNING)
CA-1212	PALMDALE HYBRID POWER PROJECT	10/18/2011 ACT	COMBUSTION TURBINES (NORMAL OPERATION)	154	MW	Particulate matter, total < 10 µ (TPM10)	USE PUC QUALITY NATURAL GAS	0.0048	LB/MMBTU	9-HR AVG (NO DUCT BURNING)
CA-1212	PALMDALE HYBRID POWER PROJECT	10/18/2011 ACT	COMBUSTION TURBINES (NORMAL OPERATION)	154	MW	Particulate matter, total < 2.5 µ (TPM2.5)	USE PUC QUALITY NATURAL GAS	0.0048	LB/MMBTU	9-HR AVG (NO DUCT BURNING)
CO-0073	PUEBLO AIRPORT GENERATING STATION	07/22/2010 ACT	Three simple cycle combustion turbines	799.7	MMBTU/H	Particulate matter, total (TPM)	Use of pipeline quality natural gas and good combustor design	6.6	LB/H	AVE OVER STACK TEST LENGTH
CO-0073	PUEBLO AIRPORT GENERATING STATION	07/22/2010 ACT	Three simple cycle combustion turbines	799.7	MMBTU/H	Particulate matter, total < 10 µ (TPM10)	Use of pipeline quality natural gas and good combustor design	6.6	LB/H	AVE OVER STACK TEST LENGTH
CO-0073	PUEBLO AIRPORT GENERATING STATION	07/22/2010 ACT	Four combined cycle combustion turbines	373	MMBTU/H	Particulate matter, total (TPM)	Use of pipeline quality natural gas and good combustor design	4.3	LB/H	AVE OVER STACK TEST LENGTH
CO-0073	PUEBLO AIRPORT GENERATING STATION	07/22/2010 ACT	Four combined cycle combustion turbines	373	MMBTU/H	Particulate matter, total < 10 µ (TPM10)	Use of pipeline quality natural gas and good combustor design	4.3	LB/H	AVE OVER STACK TEST LENGTH
IA-0107	MARSHALLTOWN GENERATING STATION	04/14/2014 ACT	Combustion turbine #1 - combined cycle	2258	mmBtu/hr	Particulate matter, total (TPM)		0.01	LB/MMBTU	AVG. OF 3 ONE HOUR TEST RUNS
IA-0107	MARSHALLTOWN GENERATING STATION	04/14/2014 ACT	Combustion turbine #2 -combined cycle	2258	mmBtu/hr	Particulate matter, total (TPM)		0.01	LB/MMBTU	AVERAGE OF 3 ONE-HOUR TEST RUNS
ID-0018	LANGLEY GULCH POWER PLANT	06/25/2012 ACT	COMBUSTION TURBINE (MB) IN COMBINED CYCLE W/ DUCT BURNER	2375.28	MMBTU/H	Particulate matter, filterable < 10 µ (FPM10)	GOOD COMBUSTION PRACTICES (GCP)	0		SEE NOTE
IL-0129	CPV THREE RIVERS ENERGY CENTER	07/30/2018 ACT	Combined Cycle Combustion Turbines	3474	mmBtu/hr	Particulate matter, filterable (FPM)	Good combustion practices	0.0087	LB/MMBTU	3-HOUR BLOCK AVERAGE
IL-0129	CPV THREE RIVERS ENERGY CENTER	07/30/2018 ACT	Combined Cycle Combustion Turbines	3474	mmBtu/hr	Particulate matter, total < 10 µ (TPM10)	Good combustion practice	0.0069	LB/MMBTU	3-HOUR BLOCK AVERAGE
*IL-0130	JACKSON ENERGY CENTER	12/31/2018 ACT	Combined-Cycle Combustion Turbine	3864	mmBtu/hr	Particulate matter, total < 10 µ (TPM10)	Good combustion practices	0.0026	LB/MMBTU	3-HR BLOCK AVERAGE
IN-0138	ST. JOSEPH ENEGRY CENTER, LLC	12/03/2012 ACT	FOUR (4) NATURAL GAS COMBINED CYCLE COMBUSTION TURBINES	2300	MMBTU/H	Particulate matter, filterable (PM)	GOOD CUMBUSTION PRACTICE AND FUEL SPECIFICATION	18	LB/H	3 HOURS
IN-0138	ST. JOSEPH ENEGRY CENTER, LLC	12/03/2012 ACT	FOUR (4) NATURAL GAS COMBINED CYCLE COMBUSTION TURBINES	2300	MMBTU/H	Particulate matter, filterable < 10 µ (PM10)	GOOD CUMBUSTION PRACTICE AND FUEL SPECIFICATION	18	LB/H	3 HOURS
IN-0138	ST. JOSEPH ENEGRY CENTER, LLC	12/03/2012 ACT	FOUR (4) NATURAL GAS COMBINED CYCLE COMBUSTION TURBINES	2300	MMBTU/H	Particulate matter, filterable < 2.5 µ (PM2.5)	GOOD COMBUSTION PRACTICE AND FUEL SPECIFICATION	18	LB/H	3 HOURS
IN-0138	ST. JOSEPH ENEGRY CENTER, LLC	12/03/2012 ACT	TURBINE LUBE DEMISTER VENTS	0		Particulate matter, filterable (PM)	GOOD DESIGN AND OPERATING PRACTICES	0		
IN-0138	ST. JOSEPH ENEGRY CENTER, LLC	12/03/2012 ACT	TURBINE LUBE DEMISTER VENTS	0		Particulate matter, filterable < 10 µ (PM10)	GOOD DESIGN AND OPERATING PRACTICES	0		
IN-0138	ST. JOSEPH ENEGRY CENTER, LLC	12/03/2012 ACT	TURBINE LUBE DEMISTER VENTS	0		Particulate matter, filterable < 2.5 µ (PM2.5)	GOOD DESIGN AND OPERATING PRACTICES	0		
IS-0029	THE EMPIRE DISTRICT ELECTRIC COMPANY	07/14/2015 ACT	Combined cycle combustion turbine	250	MW	Particulate matter, total < 2.5 µ (TPM2.5)	heat recovery steam generator (HRSG)	30.2	LB/H	
IS-0029	THE EMPIRE DISTRICT ELECTRIC COMPANY	07/14/2015 ACT	Combined cycle combustion turbine	250	MW	Particulate matter, total < 10 µ (TPM10)	heat recovery steam generator (HRSG)	30.2	LB/H	
IS-0029	THE EMPIRE DISTRICT ELECTRIC COMPANY	07/14/2015 ACT	Combined cycle combustion turbine	250	MW	Particulate matter, total (TPM)	heat recovery steam generator (HRSG)	30.2	LB/H	
LA-0254	NINEMILE POINT ELECTRIC GENERATING PLANT	08/16/2011 ACT	COMBINED CYCLE TURBINE GENERATORS (UNITS 6A & 6B)	7346	MMBTU/H	Particulate matter, total < 2.5 µ (TPM2.5)	PRACTICES	26.23	LB/H	HOURLY AVERAGE W/O DUCT BURNER
LA-0254	NINEMILE POINT ELECTRIC GENERATING PLANT	08/16/2011 ACT	COMBINED CYCLE TURBINE GENERATORS (UNITS 6A & 6B)	7346	MMBTU/H	Particulate matter, total < 10 µ (TPM10)	PRACTICES	26.23	LB/H	HOURLY AVERAGE W/O DUCT BURNER
LA-0257	SABINE PASS LNG TERMINAL	12/06/2011 ACT	Simple Cycle Refrigeration Compressor Turbines (16)	286	MMBTU/H	Particulate matter, total (TPM)	Good combustion practices and fueled by natural gas	2.08	LB/H	HOURLY MAXIMUM
LA-0257	SABINE PASS LNG TERMINAL	12/06/2011 ACT	Combined Cycle Refrigeration Compressor Turbines (8)	286	MMBTU/H	Particulate matter, total (TPM)	Good combustion practices and fueled by natural gas	2.08	LB/H	HOURLY MAXIMUM
LA-0257	SABINE PASS LNG TERMINAL	12/06/2011 ACT	Simple Cycle Generation Turbines (2)	286	MMBTU/H	Particulate matter, total (TPM)	Good combustion practices and fueled by natural gas	2.08	LB/H	HOURLY MAXIMUM
LA-0308	MORGAN CITY POWER PLANT	09/26/2013 ACT	Combustion Turbine with SCR/HRSG	607.1	MMBTU/hr	Particulate matter, filterable < 10 µ (FPM10)	Good combustion practices and clean burning fuels (natural gas)	12.03	LB/H	HOURLY MAXIMUM
LA-0308	MORGAN CITY POWER PLANT	09/26/2013 ACT	Combustion Turbine with SCR/HRSG	607.1	MMBTU/hr	Particulate matter, filterable < 2.5 µ (FPM2.5)	Good combustion practices and clean burning fuel (natural gas)	12.03	LB/H	HOURLY MAXIMUM
LA-0331	CALCASIEU PASS LNG PROJECT	09/21/2018 ACT	Combined Cycle Combustion Turbines (CCCT1 to CCCT5)	921	MM BTU/h	Particulate matter, total < 10 µ (TPM10)	Exclusive Combustion of Fuel Gas and Good Combustion Practices.	9.53	LB/H	3 HOUR AVERAGE
LA-0331	CALCASIEU PASS LNG PROJECT	09/21/2018 ACT	Combined Cycle Combustion Turbines (CCCT1 to CCCT5)	921	MM BTU/h	Particulate matter, total < 2.5 µ (TPM2.5)	Exclusive Combustion of Fuel Gas and Good Combustion Practices.	9.53	LB/H	3 HOUR AVERAGE
LA-0331	CALCASIEU PASS LNG PROJECT	09/21/2018 ACT	Aeroderivative Simple Cycle Combustion Turbine	263	MM BTU/h	Particulate matter, total < 10 µ (TPM10)	Exclusive Combustion of Fuel Gas, Good Combustion Practices Including Proper Burner Design.	4.5	LB/H	3 HOUR AVERAGE
LA-0331	CALCASIEU PASS LNG PROJECT	09/21/2018 ACT	Aeroderivative Simple Cycle Combustion Turbine	263	MM BTU/h	Particulate matter, total < 2.5 µ (TPM2.5)	Exclusive Combustion of Fuel Gas, Good Combustion Practices Including Proper Burner Design.	4.5	LB/H	3 HOUR AVERAGE
LA-0331	CALCASIEU PASS LNG PROJECT	09/21/2018 ACT	Simple Cycle Combustion Turbines (SCCT1 to SCCT3)	927	MM BTU/h	Particulate matter, total < 10 µ (TPM10)	Exclusive Combustion of Fuel Gas and Good Combustion Practices, including Proper Burner Design.	8	LB/H	3 HOUR AVERAGE
LA-0331	CALCASIEU PASS LNG PROJECT	09/21/2018 ACT	Simple Cycle Combustion Turbines (SCCT1 to SCCT3)	927	MM BTU/h	Particulate matter, total < 2.5 µ (TPM2.5)	Exclusive Combustion of Fuel Gas and Good Combustion Practices, including Proper Burner Design.	8	LB/H	3 HOUR AVERAGE
MA-0039	SALEM HARBOR STATION REDEVELOPMENT	01/30/2014 ACT	Combustion Turbine with Duct Burner	2449	MMBTU/H	Particulate matter, total < 10 µ (TPM10)		0.0062	LB/MMBTU	1 HR AVG/DO NOT APPLY DURING SS
MA-0039	SALEM HARBOR STATION REDEVELOPMENT	01/30/2014 ACT	Combustion Turbine with Duct Burner	2449	MMBTU/H	Particulate matter, total < 2.5 µ (TPM2.5)		0.0062	LB/MMBTU	1 HR AVG/DO NOT APPLY DURING SS
MD-0041	CPV ST. CHARLES	04/23/2014 ACT	2 COMBINED-CYCLE COMBUSTION TURBINES	725	MEGAWATT	Particulate matter, filterable (FPM)	USE OF PIPELINE-QUALITY NATURAL GAS EXCLUSIVELY AND GOOD COMBUSTION PRACTICE	0.005	LB/MMBTU	3-HOUR BLOCK AVERAGE
MD-0041	CPV ST. CHARLES	04/23/2014 ACT	2 COMBINED-CYCLE COMBUSTION TURBINES	725	MEGAWATT	Particulate matter, total < 10 µ (TPM10)	USE OF PIPELINE-QUALITY NATURAL GAS EXCLUSIVELY AND GOOD COMBUSTION PRACTICE	0.008	LB/MMBTU	AVERAGE OF THREE STACK TEST RUNS
*MD-0042	WILDCAT POINT GENERATION FACILITY	04/08/2014 ACT	2 COMBINED CYCLE COMBUSTION TURBINES, WITH DUCT FIRING	1000	MW	Particulate matter, filterable (PM)	EXCLUSIVE USE OF PIPELINE QUALITY NATURAL GAS AND EFFICIENT TURBINE DESIGN	22.8	LB/H	3-HOUR BLOCK AVERAGE
*MD-0042	WILDCAT POINT GENERATION FACILITY	04/08/2014 ACT	2 COMBINED CYCLE COMBUSTION TURBINES, WITH DUCT FIRING	1000	MW	Particulate matter, total < 10 µ (TPM10)	EXCLUSIVE USE OF PIPELINE QUALITY NATURAL GAS AN EFFICIENT TURBINE DESIGN	38	LB/H	AVERAGE OF 3 STACK TEST RUNS
*MD-0042	WILDCAT POINT GENERATION FACILITY	04/08/2014 ACT	2 COMBINED CYCLE COMBUSTION TURBINES, WITH DUCT FIRING	1000	MW	Particulate matter, total < 2.5 µ (TPM2.5)	EXCLUSIVE USE OF PIPELINE QUALITY NATURAL GAS AN EFFICIENT TURBINE DESIGN	38	LB/H	AVERAGE OF 3 STACK TEST RUNS
*MD-0042	WILDCAT POINT GENERATION FACILITY	04/08/2014 ACT	2 COMBINED CYCLE COMBUSTION TURBINES, WITHOUT DUCT FIRING	270	MW	Particulate matter, filterable (PM)	EXCLUSIVE USE OF PIPELINE QUALITY NATURAL GAS AN EFFICIENT TURBINE DESIGN	15	LB/H	3-HOUR BLOCK AVERAGE
*MD-0042	WILDCAT POINT GENERATION FACILITY	04/08/2014 ACT	2 COMBINED CYCLE COMBUSTION TURBINES, WITHOUT DUCT FIRING	270	MW	Particulate matter, total < 10 µ (TPM10)	EXCLUSIVE USE OF PIPELINE QUALITY NATURAL GAS AN EFFICIENT TURBINE DESIGN	25.1	LB/H	AVERAGE OF 3 STACK TEST RUNS
*MD-0042	WILDCAT POINT GENERATION FACILITY	04/08/2014 ACT	2 COMBINED CYCLE COMBUSTION TURBINES, WITHOUT DUCT FIRING	270	MW	Particulate matter, total < 2.5 µ (TPM2.5)	EXCLUSIVE USE OF PIPELINE QUALITY NATURAL GAS AN EFFICIENT TURBINE DESIGN	25.1	LB/H	AVERAGE OF 3 STACK TEST RUNS
MD-0045	MATTAWOMAN ENERGY CENTER	11/13/2015 ACT	2 COMBINED-CYCLE COMBUSTION TURBINES	286	MW	Particulate matter, filterable (PM)	USE OF PIPELINE-QUALITY NATURAL GAS EXCLUSIVELY AND GOOD COMBUSTION PRACTICE	8.9	LB/H	3-HOUR BLOCK AVERAGE, W/OUT DUCT FIRING)
MD-0045	MATTAWOMAN ENERGY CENTER	11/13/2015 ACT	2 COMBINED-CYCLE COMBUSTION TURBINES	286	MW	Particulate matter, total < 10 µ (TPM10)	USE OF PIPELINE-QUALITY NATURAL GAS EXCLUSIVELY AND GOOD COMBUSTION PRACTICES	17.9	LB/H	W/OUT DUCT FIRING, AVG. OF 3 STACK TESTS
MD-0045	MATTAWOMAN ENERGY CENTER	11/13/2015 ACT	2 COMBINED-CYCLE COMBUSTION TURBINES	286	MW	Particulate matter, total < 2.5 µ (TPM2.5)	USE OF PIPELINE QUALITY NATURAL GAS EXCLUSIVELY AND GOOD COMBUSTION PRACTICES.	17.9	LB/H	W/OUT DUCT FIRING, AVG. OF 3 STACK TESTS
MD-0046	KEYS ENERGY CENTER	10/31/2014 ACT	2 COMBINED-CYCLE COMBUSTION TURBINES	215	MW	Particulate matter, filterable (PM)	USE OF PIPELINE-QUALITY NATURAL GAS EXCLUSIVELY AND GOOD COMBUSTION PRACTICE	8.8	LB/H	3-HOUR BLOCK AVERAGE, W/OUT DUCT FIRING
MD-0046	KEYS ENERGY CENTER	10/31/2014 ACT	2 COMBINED-CYCLE COMBUSTION TURBINES	215	MW	Particulate matter, total < 10 µ (TPM10)	USE OF PIPELINE-QUALITY NATURAL GAS EXCLUSIVELY AND GOOD COMBUSTION PRACTICES.	11	LB/H	W/OUT DUCT FIRING, AVG. OF 3 STACK TESTS
MI-0402	SUMPTER POWER PLANT	11/17/2011 ACT	Combined cycle combustion turbine w/ HRSG	130	MW electrical output	Particulate matter, total < 10 µ (TPM10)		0.0066	LB/MMBTU	TEST
MI-0402	SUMPTER POWER PLANT	11/17/2011 ACT	Combined cycle combustion turbine w/ HRSG	130	MW electrical output	Particulate matter, total < 2.5 µ (TPM2.5)		0.0066	LB/MMBTU	TEST
MI-0405	MIDLAND COGENERATION VENTURE	04/23/2013 ACT	Natural gas fueled combined cycle combustion turbine generators (CTG) with HRSG	2217	MMBTU/H	Particulate matter, total (TPM)	Good combustion practices	0.005	LB/MMBTU	EACH CTG; TEST PROTOCOL
MI-0405	MIDLAND COGENERATION VENTURE	04/23/2013 ACT	Natural gas fueled combined cycle combustion turbine generators (CTG) with HRSG	2217	MMBTU/H	Particulate matter, total < 10 µ (TPM10)	Good combustion practices	0.006	LB/MMBTU	EACH CTG; TEST PROTOCOL
MI-0405	MIDLAND COGENERATION VENTURE	04/23/2013 ACT	Natural gas fueled combined cycle combustion turbine generators (CTG) with HRSG	2217	MMBTU/H	Particulate matter, total < 2.5 µ (TPM2.5)	Good combustion practices	0.006	LB/MMBTU	EACH CTG; TEST PROTOCOL
MI-0405	MIDLAND COGENERATION VENTURE	04/23/2013 ACT	Natural gas fueled combined cycle combustion turbine generators (CTG) with HRSG and duct burner (DB)	2486	MMBTU/H	Particulate matter, total (TPM)	Good combustion practices	0.004	LB/MMBTU	TEST PROTOCOL
MI-0405	MIDLAND COGENERATION VENTURE	04/23/2013 ACT	Natural gas fueled combined cycle combustion turbine generators (CTG) with HRSG and duct burner (DB)	2486	MMBTU/H	Particulate matter, total < 10 µ (TPM10)	Good combustion practices	0.008	LB/MMBTU	TEST PROTOCOL
MI-0405	MIDLAND COGENERATION VENTURE	04/23/2013 ACT	Natural gas fueled combined cycle combustion turbine generators (CTG) with HRSG and duct burner (DB)	2486	MMBTU/H	Particulate matter, total < 2.5 µ (TPM2.5)	Good combustion practices	0.008	LB/MMBTU	TEST PROTOCOL
MI-0406	RENAISSANCE POWER LLC	11/01/2013 ACT	F G-CTG1-4 Natural gas fueled combined cycle combustion turbine generators (CTG)	2347	MMBTU/H	Particulate matter, filterable (FPM)	Good combustion practices	0.0042	LB/MMBTU	TEST PROTOCOL
MI-0406	RENAISSANCE POWER LLC	11/01/2013 ACT	F G-CTG1-4 Natural gas fueled combined cycle combustion turbine generators (CTG)	2347	MMBTU/H	Particulate matter, total < 10 µ (TPM10)	Good combustion practices	0.0042	LB/MMBTU	TEST PROTOCOL
MI-0406	RENAISSANCE POWER LLC	11/01/2013 ACT	F G-CTG1-4 Natural gas fueled combined cycle combustion turbine generators (CTG)	2347	MMBTU/H	Particulate matter, total < 2.5 µ (TPM2.5)	Good combustion practices	0.0042	LB/MMBTU	TEST PROTOCOL
MI-0406	RENAISSANCE POWER LLC	11/01/2013 ACT	F G-CTG/DB1-4 Natural gas fueled combined cycle combustion turbine generators; duct burner on HRSG	2807	MMBTU/H	Particulate matter, filterable (FPM)	Good combustion practices	0.0073	LB/MMBTU	TEST PROTOCOL
MI-0406	RENAISSANCE POWER LLC	11/01/2013 ACT	F G-CTG/DB1-4 Natural gas fueled combined cycle combustion turbine generators; duct burner on HRSG	2807	MMBTU/H	Particulate matter, total < 10 µ (TPM10)	Good combustion practices	0.0073	LB/MMBTU	TEST PROTOCOL
MI-0406	RENAISSANCE POWER LLC	11/01/2013 ACT	F G-CTG/DB1-4 Natural gas fueled combined cycle combustion turbine generators; duct burner on HRSG	2807	MMBTU/H	Particulate matter, total < 2.5 µ (TPM2.5)	Good combustion practices	0.0073	LB/MMBTU	TEST PROTOCOL
MI-0410	THETFORD GENERATING STATION	07/25/2013 ACT	F G-PEAKERS: 2 natural gas fired simple cycle combustion turbines	171	MMBTU/H	Particulate matter, filterable (FPM)	Efficient combustion; natural gas fuel.	0.01	LB/MMBTU	TEST PROTOCOL WILL SPECIFY AVG. TIME.
MI-0410	THETFORD GENERATING STATION	07/25/2013 ACT	F G-PEAKERS: 2 natural gas fired simple cycle combustion turbines	171	MMBTU/H	Particulate matter, total < 10 µ (TPM10)	Efficient combustion; natural gas fuel.	0.02	LB/MMBTU	TEST PROTOCOL WILL SPECIFY AVG. TIME
MI-0410	THETFORD GENERATING STATION	07/25/2013 ACT	F G-PEAKERS: 2 natural gas fired simple cycle combustion turbines	171	MMBTU/H	Particulate matter, total < 2.5 µ (TPM2.5)	Efficient combustion; natural gas fuel.	0.02	LB/MMBTU	TEST PROTOCOL WILL SPECIFY AVG. TIME
MI-0432	NEW COVERT GENERATING FACILITY	07/30/2018 ACT	FG-TURB/DB1-3 (3 combined cycle combustion turbine and heat recovery steam generator trains)	1230	MW	Particulate matter, total < 10 µ (TPM10)	Use clean fuel (natural gas) and good combustion practices.	30.7	LB/H	HOURLY; EACH CT/HRSG TRAIN
MI-0432	NEW COVERT GENERATING FACILITY	07/30/2018 ACT	FG-TURB/DB1-3 (3 combined cycle combustion turbine and heat recovery steam generator trains)	1230	MW	Particulate matter, total < 2.5 µ (TPM2.5)	Use clean fuel (natural gas) and good combustion practices.	30.7	LB/H	HOURLY; EACH CT/HRSG TRAIN
MI-0433	MEC NORTH, LLC AND MEC SOUTH LLC	06/29/2018 ACT	EUCTGHRSG (South Plant): A combined cycle natural gas-fired combustion turbine generator with heat recovery steam genera	900	MW	Particulate matter, filterable (FPM)	Good combustion practices, inlet air conditioning, and the use of pipeline quality natural gas.	5.8	LB/H	HOURLY
MI-0433	MEC NORTH, LLC AND MEC SOUTH LLC	06/29/2018 ACT	EUCTGHRSG (South Plant): A combined cycle natural gas-fired combustion turbine generator with heat recovery steam genera	900	MW	Particulate matter, total < 10 µ (TPM10)	Good combustion practices, inlet air conditioning, and the use of pipeline quality natural gas.	19.1	LB/H	HOURLY
MI-0433	MEC NORTH, LLC AND MEC SOUTH LLC	06/29/2018 ACT	EUCTGH

NJ-0080	HESS NEWARK ENERGY CENTER	11/01/2012 ACT	Combined cylce turbine with duct burner	39463	mmcubic ft/year*	Particulate matter, filterable < 10 µ (PM10)	Use of natural gas a clean burning fuel	13.2	LB/H	AVERAGE OF THREE TESTS
NJ-0080	HESS NEWARK ENERGY CENTER	11/01/2012 ACT	Combined cylce turbine with duct burner	39463	mmcubic ft/year*	Particulate matter, filterable < 2.5 µ (PM2.5)	Use of natural gas a clean burning fuel	13.2	LB/H	AVERAGE OF THREE TESTS
NJ-0080	HESS NEWARK ENERGY CENTER	11/01/2012 ACT	Combined cylce turbine with duct burner	39463	mmcubic ft/year*	Particulate matter, filterable (PPM)	Use of natural gas a clean burning fuel	7.9	LB/H	AVERAGE OF THREE TESTS
NJ-0080	HESS NEWARK ENERGY CENTER	11/01/2012 ACT	Combined Cycle Combustion Turbine	39463	MMCubic cf/yr	Particulate matter, filterable (PPM)	Good combustion Practices and use of natural gas a clean burning fuel	6.6	LB/H	AVERAGE OF THREE TESTS
NJ-0080	HESS NEWARK ENERGY CENTER	11/01/2012 ACT	Combined Cycle Combustion Turbine	39463	MMCubic cf/yr	Particulate matter, filterable < 10 µ (PM10)	Use of natural gas a clean burning fuel	11	LB/H	AVERAGE OF THREE TESTS
NJ-0080	HESS NEWARK ENERGY CENTER	11/01/2012 ACT	Combined Cycle Combustion Turbine	39463	MMCubic cf/yr	Particulate matter, filterable < 2.5 µ (PM2.5)	Use of Natural Gas a clean burning fuel	11	LB/H	AVERAGE OF THREE TESTS
NJ-0081	PSEG FOSSIL LLC SEWAREN GENERATING STATION	08/07/2014 ACT	Combined Cycle Combustion Turbine -Siemens turbine without Duct Burner	33691	MMCF/YR	Particulate matter, filterable (PPM)	Use of Natural Gas as a clean burning fuel	10.5	LB/H	AVERAGE OF THREE ONE HOUR TESTS
NJ-0081	PSEG FOSSIL LLC SEWAREN GENERATING STATION	08/07/2014 ACT	Combined Cycle Combustion Turbine -Siemens turbine without Duct Burner	33691	MMCF/YR	Particulate matter, total < 10 µ (TPM 10)	USE OF NATURAL GAS A CLEAN BURNING FUEL	13	LB/H	AVERAGE OF THREE ONE HOUR TESTS
NJ-0081	PSEG FOSSIL LLC SEWAREN GENERATING STATION	08/07/2014 ACT	Combined Cycle Combustion Turbine -Siemens turbine without Duct Burner	33691	MMCF/YR	Particulate matter, total < 2.5 µ (TPM2.5)	USE OF NATURAL GAS A CLEAN BURNING FUEL	13	LB/H	AVERAGE OF THREE ONE HOUR TESTS
NJ-0081	PSEG FOSSIL LLC SEWAREN GENERATING STATION	08/07/2014 ACT	COMBINED CYCLE COMBUSTION TURBINE WITH DUCT BURNER - SIEMENS	33691	MMCF/YR	Particulate matter, filterable (PPM)	Use of natural gas a clean burning fuel	10.6	LB/H	AVERAGE OF THREE ONE HOUR TESTS
NJ-0081	PSEG FOSSIL LLC SEWAREN GENERATING STATION	08/07/2014 ACT	COMBINED CYCLE COMBUSTION TURBINE WITH DUCT BURNER - SIEMENS	33691	MMCF/YR	Particulate matter, total < 10 µ (TPM10)	Use of natural gas a clean burning fuel	14	LB/H	AVERAGE OF THREE TESTS
NJ-0081	PSEG FOSSIL LLC SEWAREN GENERATING STATION	08/07/2014 ACT	COMBINED CYCLE COMBUSTION TURBINE WITH DUCT BURNER - SIEMENS	33691	MMCF/YR	Particulate matter, total < 2.5 µ (TPM2.5)	Use of natural gas a clean burning fuel	14	LB/H	AVERAGE OF THREE ONE HOUR TESTS
NJ-0081	PSEG FOSSIL LLC SEWAREN GENERATING STATION	08/07/2014 ACT	COMBINED CYCLE COMBUSTION TURBINE WITH DUCT BURNER - GENERAL ELECTRIC	33691	MMCF/YR	Particulate matter, total < 2.5 µ (TPM2.5)	Use of natural gas only as a clean burning fuel	14.6	LB/H	AVERAGE OF THREE ONE HOUR TESTS
NJ-0081	PSEG FOSSIL LLC SEWAREN GENERATING STATION	08/07/2014 ACT	COMBINED CYCLE COMBUSTION TURBINE WITH DUCT BURNER - GENERAL ELECTRIC	33691	MMCF/YR	Particulate matter, total < 10 µ (TPM10)	Use of natural gas only as a clean burning fuel	14.6	LB/H	AVERAGE OF THREE ONE HOUR TESTS
NJ-0081	PSEG FOSSIL LLC SEWAREN GENERATING STATION	08/07/2014 ACT	COMBINED CYCLE COMBUSTION TURBINE WITH DUCT BURNER - GENERAL ELECTRIC	33691	MMCF/YR	Particulate matter, filterable < 2.5 µ (PM2.5)	Use of Natural Gas a clean burning fuel	9.8	LB/H	AVERAGE OF THREE ONE HOUR TESTS
NJ-0081	PSEG FOSSIL LLC SEWAREN GENERATING STATION	08/07/2014 ACT	COMBINED CYCLE COMBUSTION TURBINE WITHOUT DUCT BURNER - GENERAL ELECTRIC	33691	MMCF/YR	Particulate matter, filterable (PPM)	Use of Natural Gas as a clean burning fuel	8.7	LB/H	AVERAGE OF THREE ONE-HOUR TESTS
NJ-0081	PSEG FOSSIL LLC SEWAREN GENERATING STATION	08/07/2014 ACT	COMBINED CYCLE COMBUSTION TURBINE WITHOUT DUCT BURNER - GENERAL ELECTRIC	33691	MMCF/YR	Particulate matter, total < 10 µ (TPM10)	Use of Natural Gas as a clean burning fuel	12.7	LB/H	AVERAGE OF THREE ONE HOUR TESTS
NJ-0081	PSEG FOSSIL LLC SEWAREN GENERATING STATION	08/07/2014 ACT	COMBINED CYCLE COMBUSTION TURBINE WITHOUT DUCT BURNER - GENERAL ELECTRIC	33691	MMCF/YR	Particulate matter, total < 2.5 µ (TPM2.5)	Use of natural gas as a clean burning fuel	12.7	LB/H	AVERAGE OF THREE ONE HOUR TESTS
NJ-0082	WEST DEPTFORD ENERGY STATION	07/18/2014 ACT	Combined Cycle Combustion Turbine without Duct Burner	20282	MMCF/YR	Particulate matter, filterable (PPM)	Use of natural gas a clean burning fuel	6	LB/H	AVERAGE OF THREE ONE HOUR STACK TESTS
NJ-0082	WEST DEPTFORD ENERGY STATION	07/18/2014 ACT	Combined Cycle Combustion Turbine without Duct Burner	20282	MMCF/YR	Particulate matter, total < 10 µ (TPM10)	Use of natural gas a clean burning fuel	10	LB/H	AVERAGE OF THREE ONE HOUR STACK TESTS
NJ-0082	WEST DEPTFORD ENERGY STATION	07/18/2014 ACT	Combined Cycle Combustion Turbine without Duct Burner	20282	MMCF/YR	Particulate matter, total < 2.5 µ (TPM2.5)	Use of natural gas a clean burning fuel	10	LB/H	AVERAGE OF THREE ONE HOUR STACK TESTS
NJ-0082	WEST DEPTFORD ENERGY STATION	07/18/2014 ACT	Combined Cycle Combustion Turbine with Duct Burner	20282	MMCF/YR	Particulate matter, filterable (PPM)	Use of Natural gas a clean burning fuel	15.1	LB/H	AVERAGE OF THREE STACK TEST RUNS
NJ-0082	WEST DEPTFORD ENERGY STATION	07/18/2014 ACT	Combined Cycle Combustion Turbine with Duct Burner	20282	MMCF/YR	Particulate matter, total < 10 µ (TPM10)	Use of Natural gas a clean burning fuel	21.55	LB/H	AVERAGE OF THREE STACK TEST RUNS
NJ-0082	WEST DEPTFORD ENERGY STATION	07/18/2014 ACT	Combined Cycle Combustion Turbine with Duct Burner	20282	MMCF/YR	Particulate matter, total < 2.5 µ (TPM2.5)	Use of Natural Gas a clean burning fuel	21.55	LB/H	AVERAGE OF THREE STACK TEST RUNS
NJ-0085	MIDDLESEX ENERGY CENTER, LLC	07/19/2016 ACT	Combined Cycle Combustion Turbine firing Natural Gas with Duct Burner	4000	N/yr	Particulate matter, total < 2.5 µ (TPM2.5)	COMPLIANCE BY STACK TESTING	18.3	LB/H	AV OF THREE ONE H STACK TESTS EVERY 5 YR
NJ-0085	MIDDLESEX ENERGY CENTER, LLC	07/19/2016 ACT	Combined Cycle Combustion Turbine firing Natural Gas with Duct Burner	4000	N/yr	Particulate matter, filterable (PPM)	USE OF NATURAL GAS A CLEAN BURNING FUEL	30.4	LB/H	AV OF THREE ONE H STACK TESTS EVERY 5 YR
NJ-0085	MIDDLESEX ENERGY CENTER, LLC	07/19/2016 ACT	Combined Cycle Combustion Turbine firing Natural Gas with Duct Burner	4000	N/yr	Particulate matter, total < 10 µ (TPM10)	COMPLIANCE BY STACK TESTING	18.3	LB/H	AV OF THREE ONE H STACK TESTS EVERY 5 YR
NJ-0085	MIDDLESEX ENERGY CENTER, LLC	07/19/2016 ACT	Combined Cycle Combustion Turbine firing Natural Gas without Duct Burner	8040	H/YR	Particulate matter, filterable (PPM)	USE OF NATURAL GAS A CLEAN BURNING FUEL	4.4	LB/H	AV OF THREE ONE H STACK TESTS EVERY 5 YR
NJ-0085	MIDDLESEX ENERGY CENTER, LLC	07/19/2016 ACT	Combined Cycle Combustion Turbine firing Natural Gas without Duct Burner	8040	H/YR	Particulate matter, total < 10 µ (TPM10)	USE OF NATURAL GAS A CLEAN BURNING FUEL	11.7	LB/H	AV OF THREE ONE H STACK TESTS EVERY 5 YR
NJ-0085	MIDDLESEX ENERGY CENTER, LLC	07/19/2016 ACT	Combined Cycle Combustion Turbine firing Natural Gas without Duct Burner	8040	H/YR	Particulate matter, total < 2.5 µ (TPM2.5)	USE OF NATURAL GAS A CLEAN BURNING FUEL	11.7	LB/H	AV OF THREE ONE H STACK TESTS EVERY 5 YR
NJ-0085	MIDDLESEX ENERGY CENTER, LLC	07/19/2016 ACT	COMBINED CYCLE COMBUSTION TURBINE FIRING ULTRA LOW SULFUR DISTILLATE OIL	720	H/YR	Particulate matter, filterable (PPM)	USE OF ULSD a low sulfur and clean fuel	34.3	LB/H	AV OF THREE ONE H STACK TESTS EVERY 5 YR
NJ-0085	MIDDLESEX ENERGY CENTER, LLC	07/19/2016 ACT	COMBINED CYCLE COMBUSTION TURBINE FIRING ULTRA LOW SULFUR DISTILLATE OIL	720	H/YR	Particulate matter, total < 10 µ (TPM10)	use of ULSD a low sulfur and clean fuel	72	LB/H	AV OF THREE ONE H STACK TESTS EVERY 5 YR
NJ-0085	MIDDLESEX ENERGY CENTER, LLC	07/19/2016 ACT	COMBINED CYCLE COMBUSTION TURBINE FIRING ULTRA LOW SULFUR DISTILLATE OIL	720	H/YR	Particulate matter, total < 2.5 µ (TPM2.5)	Use of ULSD a low sulfur and clean fuel	72	LB/H	AV OF THREE ONE H STACK TESTS EVERY 5 YR
NY-0304	CPV VALLEY ENERGY CENTER	08/01/2013 ACT	Turbines - diesel fuel	0		Particulate matter, filterable (PPM)	Ultra low sulfur diesel with maximum sulfur content 0.0015 percent.	0.0368	LB/MMBTU	1 H
NY-0304	CPV VALLEY ENERGY CENTER	08/01/2013 ACT	Turbines and duct burners - NG	0		Particulate matter, filterable (PPM)	Natural gas	0.0073	LB/MMBTU	1 H
OH-0352	ORDGEN CLEAN ENERGY CENTER	06/18/2013 ACT	2 Combined Cycle Combustion Turbines-Siemens, without duct burners	515600	MMSCF/rolling 12-months	Particulate matter, total < 10 µ (TPM10)	clean burning fuel, only natural gas	13.3	LB/H	
OH-0352	ORDGEN CLEAN ENERGY CENTER	06/18/2013 ACT	2 Combined Cycle Combustion Turbines-Siemens, with duct burners	51560	MMSCF/rolling 12-MO	Particulate matter, total < 10 µ (TPM10)	clean burning fuel, only natural gas	14	LB/H	
OH-0352	ORDGEN CLEAN ENERGY CENTER	06/18/2013 ACT	2 Combined Cycle Combustion Turbines-Mitsubishi, without duct burners	47917	MMSCF/rolling 12-MO	Particulate matter, total < 10 µ (TPM10)	clean burning fuel, only natural gas	11.3	LB/H	
OH-0352	ORDGEN CLEAN ENERGY CENTER	06/18/2013 ACT	2 Combined Cycle Combustion Turbines-Mitsubishi, with duct burners	47917	MMSCF/rolling 12-MO	Particulate matter, total < 10 µ (TPM10)	clean burning fuel, only natural gas	30.1	LB/H	
OH-0356	DUKE ENERGY HANGIN G ROCK ENERGY	12/18/2012 ACT	Turbines (4) (mod el GE 7FA) Duct Burners Off	172	MW	Particulate matter, total < 10 µ (TPM10)	Burning natural gas in an efficient combustion turbine	15	LB/H	
OH-0356	DUKE ENERGY HANGIN G ROCK ENERGY	12/18/2012 ACT	Turbines (4) (mod el GE 7FA) Duct Burners On	172	MW	Particulate matter, total < 10 µ (TPM10)	Burning natural gas in an efficient combustion turbine	19.9	LB/H	
OH-0360	CARROLL COUNTY ENERGY	11/05/2013 ACT	Combined Cycle Combustion Turbines (two, identical) (P001 and P002)	2085	MMBTU/H	Particulate matter, total < 10 µ (TPM10)	natural gas only	19.8	LB/H	WITH DUCT BURNER. SEE NOTES.
OH-0360	CARROLL COUNTY ENERGY	11/05/2013 ACT	Combined Cycle Combustion Turbines (two, identical) (P001 and P002)	2085	MMBTU/H	Particulate matter, total < 2.5 µ (TPM2.5)	Natural gas only	19.8	LB/H	WITH DUCT BURNER. SEE NOTES.
OH-0363	NTE OHIO, LLC	11/05/2014 ACT	Turbine generator with HRSG and duct burners (P001)	3278.5	MMBTU/H	Particulate matter, filterable (PPM)	Exclusive use of natural gas, high efficiency inlet air filters and low NOx burner.	20	LB/H	WITH DUCT BURNER. SEE NOTES.
OH-0363	NTE OHIO, LLC	11/05/2014 ACT	Turbine generator with HRSG and duct burners (P001)	3278.5	MMBTU/H	Particulate matter, total < 10 µ (TPM10)	Exclusive use of natural gas, high efficiency inlet air filters and low NOx burner.	20	LB/H	WITH DUCT BURNER. SEE NOTES.
OH-0363	NTE OHIO, LLC	11/05/2014 ACT	Turbine generator with HRSG and duct burners (P001)	3278.5	MMBTU/H	Particulate matter, total < 2.5 µ (TPM2.5)	Exclusive use of natural gas, high efficiency inlet air filters and low NOx burner.	20	LB/H	WITH DUCT BURNER. SEE NOTES.
OH-0365	ROLLING HILLS GENERATING, LLC	05/20/2015 ACT	Combustion Turbines, Scenario 1 (4, identical) (P001, P002, P004, P005)	2022	MMBTU/H	Particulate matter, total (TPM)	good combustion practices along with clean fuels	0.0068	LB/MMBTU	HHV, 3 HR AVG. SEE NOTES.
OH-0365	ROLLING HILLS GENERATING, LLC	05/20/2015 ACT	Combustion Turbines, Scenario 1 (4, identical) (P001, P002, P004, P005)	2022	MMBTU/H	Particulate matter, total < 10 µ (TPM10)	good combustion practices along with clean fuels	0.0068	LB/MMBTU	HHV, 3 HR AVG. SEE NOTES.
OH-0365	ROLLING HILLS GENERATING, LLC	05/20/2015 ACT	Combustion Turbines, Scenario 1 (4, identical) (P001, P002, P004, P005)	2022	MMBTU/H	Particulate matter, total < 2.5 µ (TPM2.5)	good combustion practices along with clean fuels	0.0068	LB/MMBTU	HHV, 3 HR AVG. SEE NOTES.
OH-0365	ROLLING HILLS GENERATING, LLC	05/20/2015 ACT	Combustion Turbines, Scenario 2 (4, identical) (P001, P002, P004, P005)	2344	MMBTU/H	Particulate matter, total (TPM)	good combustion practices along with clean fuels	0.0085	LB/MMBTU	HHV, 3 HR AVG. SEE NOTES.
OH-0365	ROLLING HILLS GENERATING, LLC	05/20/2015 ACT	Combustion Turbines, Scenario 2 (4, identical) (P001, P002, P004, P005)	2344	MMBTU/H	Particulate matter, total < 10 µ (TPM10)	good combustion practices along with clean fuels	0.0085	LB/MMBTU	HHV, 3 HR AVG. SEE NOTES.
OH-0365	ROLLING HILLS GENERATING, LLC	05/20/2015 ACT	Combustion Turbines, Scenario 2 (4, identical) (P001, P002, P004, P005)	2344	MMBTU/H	Particulate matter, total < 2.5 µ (TPM2.5)	good combustion practices along with clean fuels	0.0085	LB/MMBTU	HHV, 3 HR AVG. SEE NOTES.
OH-0366	CLEAN ENERGY FUTURE - LORDSTOWN, LLC	08/25/2015 ACT	Combined Cycle Combustion Turbines (two, identical) (P001 and P002)	2725	MMBTU/H	Particulate matter, total < 10 µ (TPM10)	Low sulfur fuel	14.9	LB/H	WITH DUCT BURNER. SEE NOTES.
OH-0366	CLEAN ENERGY FUTURE - LORDSTOWN, LLC	08/25/2015 ACT	Combined Cycle Combustion Turbines (two, identical) (P001 and P002)	2725	MMBTU/H	Particulate matter, total < 2.5 µ (TPM2.5)	Low sulfur fuel	14.9	LB/H	WITH DUCT BURNER. SEE NOTES.
OH-0367	SOUTH FIELD ENERGY LLC	09/23/2016 ACT	Combined Cycle Combustion Turbines (two, identical) (P001 and P002)	3331	MMBTU/H	Particulate matter, total < 10 µ (TPM10)	Good combustion controls	25	LB/H	NAT GAS, WITH DUCT BURNER. SEE NOTES.
OH-0367	SOUTH FIELD ENERGY LLC	09/23/2016 ACT	Combined Cycle Combustion Turbines (two, identical) (P001 and P002)	3331	MMBTU/H	Particulate matter, total < 2.5 µ (TPM2.5)	Good combustion controls	25	LB/H	NAT GAS, WITH DUCT BURNER. SEE NOTES.
OH-0370	TRUMBULL ENERGY CENTER	09/07/2017 ACT	Combined Cycle Combustion Turbines (two, identical) (P001 and P002)	3065	MMBTU/H	Particulate matter, total < 10 µ (TPM10)	Good combustion controls and low sulfur fuel	15.2	LB/H	WITH DUCT BURNER. SEE NOTES.
OH-0370	TRUMBULL ENERGY CENTER	09/07/2017 ACT	Combined Cycle Combustion Turbines (two, identical) (P001 and P002)	3065	MMBTU/H	Particulate matter, total < 2.5 µ (TPM2.5)	Good combustion controls and low sulfur fuel	15.2	LB/H	WITH DUCT BURNER. SEE NOTES.
OH-0372	ORDGEN ENERGY CENTER	09/27/2017 ACT	Combined Cycle Combustion Turbines (two, identical) (P001 and P002)	3065	MMBTU/H	Particulate matter, total < 10 µ (TPM10)	good combustion practices and pipeline quality natural gas	15.4	LB/H	WITH DUCT BURNER. SEE NOTES.
OH-0372	ORDGEN ENERGY CENTER	09/27/2017 ACT	Combined Cycle Combustion Turbines (two, identical) (P001 and P002)	3065	MMBTU/H	Particulate matter, total < 2.5 µ (TPM2.5)	good combustion practices and pipeline quality natural gas	15.4	LB/H	WITH DUCT BURNER. SEE NOTES.
OH-0374	GUERNSEY POWER STATION LLC	10/23/2017 ACT	Combined Cycle Combustion Turbines (3, identical) (P001 to P003)	3516	MMBTU/H	Particulate matter, total (TPM)	pipeline quality natural gas	0.0073	LB/MMBTU	SEE NOTES.
OH-0374	GUERNSEY POWER STATION LLC	10/23/2017 ACT	Combined Cycle Combustion Turbines (3, identical) (P001 to P003)	3516	MMBTU/H	Particulate matter, total < 10 µ (TPM10)	pipeline quality natural gas	0.0073	LB/MMBTU	SEE NOTES.
OH-0374	GUERNSEY POWER STATION LLC	10/23/2017 ACT	Combined Cycle Combustion Turbines (3, identical) (P001 to P003)	3516	MMBTU/H	Particulate matter, total < 2.5 µ (TPM2.5)	pipeline quality natural gas	0.0073	LB/MMBTU	SEE NOTES.
OH-0375	LONG RIDGE ENERGY GENERATION LLC - HANNIBAL POWER	11/07/2017 ACT	General Electric Combustion Turbine (P004)	3544	MMBTU/H	Particulate matter, filterable (PPM)	natural gas or a natural gas and ethane mixture only	0.0036	LB/MMBTU	
OH-0375	LONG RIDGE ENERGY GENERATION LLC - HANNIBAL POWER	11/07/2017 ACT	General Electric Combustion Turbine (P004)	3544	MMBTU/H	Particulate matter, total < 10 µ (TPM10)	natural gas or a natural gas and ethane mixture only	0.0036	LB/MMBTU	
OH-0375	LONG RIDGE ENERGY GENERATION LLC - HANNIBAL POWER	11/07/2017 ACT	General Electric Combustion Turbine (P004)	3544	MMBTU/H	Particulate matter, total < 2.5 µ (TPM2.5)	natural gas or a natural gas and ethane mixture only	0.0036	LB/MMBTU	
OH-0375	LONG RIDGE ENERGY GENERATION LLC - HANNIBAL POWER	11/07/2017 ACT	Mitsubishi Combustion Turbine (P005)	3320	MMBTU/H	Particulate matter, filterable (PPM)	natural gas or a natural gas and ethane mixture only	0.004	LB/MMBTU	WITH DUCT BURNER. SEE NOTES.
OH-0375	LONG RIDGE ENERGY GENERATION LLC - HANNIBAL POWER	11/07/2017 ACT	Mitsubishi Combustion Turbine (P005)	3320	MMBTU/H	Particulate matter, total < 10 µ (TPM10)	natural gas or a natural gas and ethane mixture only	0.004	LB/MMBTU	WITH DUCT BURNER. SEE NOTES.
OH-0375	LONG RIDGE ENERGY GENERATION LLC - HANNIBAL POWER	11/07/2017 ACT	Mitsubishi Combustion Turbine (P005)	3320	MMBTU/H	Particulate matter, total < 2.5 µ (TPM2.5)	natural gas or a natural gas and ethane mixture only	0.004	LB/MMBTU	WITH DUCT BURNER. SEE NOTES.
OH-0375	LONG RIDGE ENERGY GENERATION LLC - HANNIBAL POWER	11/07/2017 ACT	Siemens Combustion Turbine (P006)	3602	MMBTU/H	Particulate matter, filterable (PPM)	natural gas or a natural gas and ethane mixture only	0.0057	LB/MMBTU	WITH DUCT BURNER. SEE NOTES.
OH-0375	LONG RIDGE ENERGY GENERATION LLC - HANNIBAL POWER	11/07/2017 ACT	Siemens Combustion Turbine (P006)	3602	MMBTU/H	Particulate matter, total < 10 µ (TPM10)	natural gas or a natural gas and ethane mixture only	0.0057	LB/MMBTU	WITH DUCT BURNER. SEE NOTES.
OH-0375	LONG RIDGE ENERGY GENERATION LLC - HANNIBAL POWER	11/07/2017 ACT	Siemens Combustion Turbine (P006)	3602	MMBTU/H	Particulate matter, total < 2.5 µ (TPM2.5)	natural gas or a natural gas and ethane mixture only	0.0057	LB/MMBTU	WITH DUCT BURNER. SEE NOTES.
OH-0377	HARRISON POWER	04/19/2018 ACT	General Electric (GE) Combustion Turbines (P005 & P006)	3439.6	MMBTU/H	Particulate matter, total < 10 µ (TPM10)	Good combustion practices and pipeline quality natural gas	0.0052	LB/MMBTU	WITH DUCT BURNER. SEE NOTES.
OH-0377	HARRISON POWER	04/19/2018 ACT	General Electric (GE) Combustion Turbines (P005 & P006)	3439.6	MMBTU/H	Particulate matter, total < 2.5 µ (TPM2.5)	Good combustion practices and pipeline quality natural gas	0.0052	LB/MMBTU	WITH DUCT BURNER. SEE NOTES.
OH-0377	HARRISON POWER	04/19/2018 ACT	General Electric (GE) Combustion Turbines (P005 & P006)	3439.6	MMBTU/H	Particulate matter, total (TPM)	Good combustion practices and pipeline quality natural gas	0.0052	LB/MMBTU	WITH DUCT BURNER. SEE NOTES.
OH-0377	HARRISON POWER	04/19/2018 ACT	Mitsubishi Hitachi Power Systems (MHPS) Combustion Turbines (P007 & P008)	3231	MMBTU/H	Particulate matter, total (TPM)	Good combustion practices and pipeline quality natural gas	0.005	LB/MMBTU	WITH DUCT BURNER. SEE NOTES.
OH-0377	HARRISON POWER	04/19/2018 ACT	Mitsubishi Hitachi Power Systems (MHPS) Combustion Turbines (P007 & P008)	3231	MMBTU/H	Particulate matter, total < 10 µ (TPM10)	Good combustion practices and pipeline quality natural gas	0.005	LB/MMBTU	WITH DUCT BURNER. SEE NOTES.
OH-0377	HARRISON POWER	04/19/2018 ACT	Mitsubishi Hitachi Power Systems (MHPS) Combustion Turbines (P007 & P008)	3231	MMBTU/H	Particulate matter, total < 2.5 µ (TPM2.5)	Good combustion practices and pipeline quality natural gas	0.005	LB/MMBTU	WITH DUCT BURNER. SEE NOTES.
OK-0154	MOORELAND GENERATING STA	07/02/2013 ACT	Combustion Turbine	360	MW	Particulate matter, total < 2.5 µ (TPM2.5)	LOW ASH FUEL AND COMBUSTION CONTROL.	22.1	LB/HR	>50% LOAD W/O DUCT FIRING
OK-0154	MOORELAND GENERATING STA	07/02/2013 ACT	COMBUSTION TURBINE	360	MW	Particulate matter, total < 2.5 µ (TPM2.5)	LOW ASH FUEL AND COMBUSTION CONTROL.	22.2	LB/HR	>50% LOAD W/O DUCT FIRING
OR-0050	TROUTDALE ENERGY CENTER, LLC	03/05/2014 ACT	Mitsubishi M501-GAC combustion turbine, combined cycle configuration with duct burner.	2988	MMBTU/H	Particulate matter, total < 10 µ (TPM10)	Utilize only natural gas or ULSD fuel; Limit the time in startu p or shutdown.	23.6	LB/H TOTAL PM	6-HR AVERAGE ON NG
OR-0050	TROUTDALE ENERGY CENTER, LLC	03/05/2014 ACT	GE LM5-100 combustion turbines, simple cycle with water injection	1680	MMBTU/H	Particulate matter, total < 10 µ (TPM10)	Utilize only natural gas or ULSD fuel; Limit the time in startu p or shutdown.	9.1	LB/H TOTAL PM	6-HR AVERAGE ON NG
PA-0278	MOXIE LIBERTY LLC/ATLANTIC POWER PL T	10/10/2012 ACT	Combined-cycle Turbines (2) - Natural gas fired	3277	MMBTU/H	Particulate matter, total (TPM)	Using fuel with little or no ash and sulfur content.	0.004	LB/MMBTU	FOR 468 MW POWERBLOCK
PA-0288	SUNBURY GENERATION LP/SUNBURY SES	04/01/2013 ACT	Combined Cycle Combustion Turbine AND DUCT BURNER (3)	2538000	MMBTU/H	Particulate matter, total (TPM)		0.0088	LB/MMBTU	
PA-0296	BIRKS HOLLOW ENERGY ASSOC LLC/ONTELAUNEE	12/17/2013 ACT	Turbine, Combined Cycle, #1 and #2	3046	MMBTU/H	Particulate matter, filterable < 10 µ (PM10)		48.56	TPY	12-MONTH ROLLING TOTAL
PA-0296	BIRKS HOLLOW ENERGY ASSOC LLC/ONTELAUNEE	12/17/2013 ACT	Turbine, Combined Cycle, #1 and #2	3046	MMBTU/H	Particulate matter, total < 2.5 µ (TPM2.5)		48.56	TPY	12-MONTH ROLLING TOTAL
*PA-0298	FUTURE POWER PA/GOOD SPRINGS NGCC FACILITY	03/04/2014 ACT	Turbine, COMBINED CYCLE UNIT (Siemens 5000)	2267	MMBTU/H	Particulate matter, filterable (PPM)		10.4	LB/H	WITH DUCT BURNER
*PA-0298	FUTURE POWER PA/GOOD SPRINGS NGCC FACILITY	03/04/2014 ACT	Turbine, COMBINED CYCLE UNIT (Siemens 5000)	2267	MMBTU/H	Particulate matter, total < 10 µ (TPM10)		15.6	LB/H	WITH DUCT BURNER
PA-0306	TENASKA PA PARTNERS/WESTMORELAND GEN FAC	02/12/2016 ACT	Large combustion turbine	0		Particulate matter, total (TPM)	Good combustion practices with the use of low ash/sulfer fuels	0.0039	LB/MMBTU	
PA-0306	TENASKA PA PARTNERS/WESTMORELAND GEN FAC	02/12/2016 ACT	Large combustion turbine	0		Particulate matter, total < 10 µ (TPM10)	Good combustion practices with the use of low ash/sulfer fuels	0.0039	LB/MMBTU	
PA-0306	TENASKA PA PARTNERS/WESTMORELAND GEN FAC	02/12/2016 ACT	Large combustion turbine	0		Particulate matter, total < 2.5 µ (TPM2.5)	Good combustion practices	0.0039	LB/MMBTU	
PA-0307	YORK ENERGY CENTER BLOCK 2 ELECTRICITY GENERATION PROJECT	06/15/2015 ACT	Two combined cycle turbines with out duct burner	2291.64	MCF/hr	Particulate matter, total (TPM)	Good combustion practices and low sulfur fuels	0.0068	LB/MMBTU	
PA-0307	YORK ENERGY CENTER BLOCK 2 ELECTRICITY GENERATION PROJECT	06/15/2015 ACT	Two combined cycle turbines with out duct burner	2291.64	MCF/hr	Particulate matter, total < 10 µ (TPM10)	Good combustion practices and low sulfur fuels	0.0068	LB/MMBTU	
PA-0307	YORK ENERGY CENTER BLOCK 2 ELECTRICITY GENERATION PROJECT	06/15/2015 ACT	Two combined cycle turbines with out duct burner	2291.64	MCF/hr	Particulate matter, total < 2.5 µ (TPM2.5)	Good combustion practices and low sulfur fuels	0.0068	LB/MMBTU	
PA-0307	YORK ENERGY CENTER BLOCK 2 ELECTRICITY GENERATION PROJECT	06/15/2015 ACT	Two combined cycle combustion turbines ULSD fired with duct burner NG fired	0		Particulate matter, total (TPM)	Good combustion practices and low sulfur fuels	0.0152	LB/MMBTU	
PA-0307	YORK ENERGY CENTER BLOCK 2 ELECTRICITY GENERATION PROJECT	06/15/2015 ACT	Two combined cycle combustion turbines ULSD fired with duct burner NG fired	0		Particulate matter, total < 10 µ (TPM10)	Good combustion practices and low sulfur fuels	0.0152	LB/MMBTU	
PA-0307	YORK ENERGY CENTER BLOCK 2 ELECTRICITY GENERATION PROJECT	06/15/2015 ACT	Two combined cycle combustion turbines ULSD fired with duct burner NG fired	0		Particulate matter, total < 2.5 µ (TPM2.5)	Good combustion practices and low sulfur fuels	0.0152	LB/MMBTU	
PA-0307	YORK ENERGY CENTER BLOCK 2 ELECTRICITY GENERATION PROJECT	06/15/2015 ACT	Two combined cycle combustion turbines ULSD fired without duct burner	0		Particulate matter, total (TPM)	Good combustion practices and low sulfur fuels	0.0272	LB/MMBTU	
PA-0307	YORK ENERGY CENTER BLOCK 2 ELECTRICITY GENERATION PROJECT	06/15/2015 ACT	Two combined cycle combustion turbines ULSD fired without duct burner	0		Particulate matter, total < 10 µ (TPM10)	Good combustion practices and low sulfur fuels	0.0272	LB/MMBTU	
PA-0307	YORK ENERGY CENTER BLOCK 2 ELECTRICITY GENERAT

PA-0310	CPV FAIRVIEW ENERGY CENTER	09/02/2036 ACT	Combustion turbine and HRSG with out duct burner NG only	0		Particulate matter, total (TPM)	Low sulfur fuels and good combustion practices	0.0068	LB/MMBTU	
PA-0310	CPV FAIRVIEW ENERGY CENTER	09/02/2036 ACT	Combustion turbine and HRSG with out duct burner NG only	0		Particulate matter, total < 2.5 µ (TPM2.5)	Low sulfur fuels and good combustion practices	0.0068	LB/MMBTU	
PA-0310	CPV FAIRVIEW ENERGY CENTER	09/02/2036 ACT	Combustion turbine and HRSG with out duct burner NG only	0		Particulate matter, total < 10 µ (TPM10)	Low sulfur fuels and good combustion practices	0.0068	LB/MMBTU	
PA-0310	CPV FAIRVIEW ENERGY CENTER	09/02/2036 ACT	Combustion turbine and HRSG with out duct burner ULSD	0		Particulate matter, total (TPM)	Water/steam injection, ULSD fuel (CCCT only - duct burner is not fired with ULSD), good combustion p	0.0415	LB/MMBTU	
PA-0310	CPV FAIRVIEW ENERGY CENTER	09/02/2036 ACT	Combustion turbine and HRSG with out duct burner ULSD	0		Particulate matter, total < 10 µ (TPM10)	Water/steam injection, ULSD fuel (CCCT only - duct burner is not fired with ULSD), good combustion p	0.0415	LB/MMBTU	
PA-0310	CPV FAIRVIEW ENERGY CENTER	09/02/2036 ACT	Combustion turbine and HRSG with out duct burner ULSD	0		Particulate matter, total < 2.5 µ (TPM2.5)	Water/steam injection, ULSD fuel (CCCT only - duct burner is not fired with ULSD), good combustion p	0.0415	LB/MMBTU	
PA-0310	CPV FAIRVIEW ENERGY CENTER	09/02/2036 ACT	Combustion turbine and HRSG with duct burner - firing NG blend with ethane	0		Particulate matter, total (TPM)		0		
PA-0310	CPV FAIRVIEW ENERGY CENTER	09/02/2036 ACT	Combustion turbine and HRSG with duct burner - firing NG blend with ethane	0		Particulate matter, total < 10 µ (TPM10)		0		
PA-0310	CPV FAIRVIEW ENERGY CENTER	09/02/2036 ACT	Combustion turbine and HRSG with duct burner - firing NG blend with ethane	0		Particulate matter, total < 2.5 µ (TPM2.5)		0		
PA-0310	CPV FAIRVIEW ENERGY CENTER	09/02/2036 ACT	Combustion turbine and HRSG with out duct burner - firing N G blend with ethane	0		Particulate matter, total (TPM)		0		
PA-0310	CPV FAIRVIEW ENERGY CENTER	09/02/2036 ACT	Combustion turbine and HRSG with out duct burner - firing N G blend with ethane	0		Particulate matter, total < 10 µ (TPM10)		0		
PA-0310	CPV FAIRVIEW ENERGY CENTER	09/02/2036 ACT	Combustion turbine and HRSG with out duct burner - firing N G blend with ethane	0		Particulate matter, total < 2.5 µ (TPM2.5)		0		
PA-0311	MOXIE FREEDOM GENERATION PLANT	09/01/2015 ACT	Combustion Turbine With Duct Burner	3727	MMBtu/hr	Particulate matter, total (TPM)		0.0063	LB/MMBTU	
PA-0311	MOXIE FREEDOM GENERATION PLANT	09/01/2015 ACT	Combustion Turbine With Duct Burner	3727	MMBtu/hr	Particulate matter, total < 10 µ (TPM10)		0.0063	LB/MMBTU	
PA-0311	MOXIE FREEDOM GENERATION PLANT	09/01/2015 ACT	Combustion Turbine With Duct Burner	3727	MMBtu/hr	Particulate matter, total < 2.5 µ (TPM2.5)		0.0063	LB/MMBTU	
PA-0311	MOXIE FREEDOM GENERATION PLANT	09/01/2015 ACT	Combustion Turbine without Duct Burner	0		Particulate matter, total (TPM)		0.0063	LB/MMBTU	
PA-0311	MOXIE FREEDOM GENERATION PLANT	09/01/2015 ACT	Combustion Turbine without Duct Burner	0		Particulate matter, total < 10 µ (TPM10)		0.0063	LB/MMBTU	
PA-0311	MOXIE FREEDOM GENERATION PLANT	09/01/2015 ACT	Combustion Turbine without Duct Burner	0		Particulate matter, total < 2.5 µ (TPM2.5)		0.0063	LB/MMBTU	
*PA-0315	HILLTOP ENERGY CENTER, LLC	04/12/2017 ACT	Combustion Turbine without Duct Burner	3509	MMBtu/hr	Particulate matter, total (TPM)		0.0072	LB	MMBTU
*PA-0315	HILLTOP ENERGY CENTER, LLC	04/12/2017 ACT	Combustion Turbine without Duct Burner	3509	MMBtu/hr	Particulate matter, total < 10 µ (TPM10)		0.0072	LB	MMBTU
*PA-0315	HILLTOP ENERGY CENTER, LLC	04/12/2017 ACT	Combustion Turbine without Duct Burner	3509	MMBtu/hr	Particulate matter, total < 2.5 µ (TPM2.5)		0.0072	LB	MMBTU
*PA-0339	RENAISSANCE ENERGY CENTER	08/27/2018 ACT	COMBUSTION TURBINE UNIT w/o DUCT BURNERS UNIT	2665.9	MMBtu/hr	Particulate matter, total (TPM)		0.0043	LB/MMBTU	
*PA-0339	RENAISSANCE ENERGY CENTER	08/27/2018 ACT	COMBUSTION TURBINE UNIT w/o DUCT BURNERS UNIT	2665.9	MMBtu/hr	Particulate matter, total < 10 µ (TPM10)		0.0043	LB/MMBTU	HR
*PA-0339	RENAISSANCE ENERGY CENTER	08/27/2018 ACT	COMBUSTION TURBINE UNIT w/o DUCT BURNERS UNIT	2665.9	MMBtu/hr	Particulate matter, total < 2.5 µ (TPM2.5)		0.0043	LB/MMBTU	HR
TN-0162	JOHNSONVILLE COGENERATION	04/19/2016 ACT	Natural Gas-Fired Combustion Turbine with HRSG	1319	MMBtu/hr	Particulate matter, total (TPM)	Good combustion design and practices	0.005	LB/MMBTU	
TX-0590	KING POWER STATION	08/05/2030 ACT	Turbine	1350	MW	Particulate matter, total (TPM)	use low ash fuel (natural gas or low sulfur diesel as a backup) and good combustion practices	11.1	LB/H	
TX-0590	KING POWER STATION	08/05/2030 ACT	Turbine	1350	MW	Particulate matter, total < 10 µ (TPM10)	use o flow ash fuel (natural gas or low sulfur diesel as a backup)	11.1	LB/H	
TX-0590	KING POWER STATION	08/05/2030 ACT	Turbine	1350	MW	Particulate matter, total < 2.5 µ (TPM2.5)	use o flow ash fuel (natural gas or low sulfur diesel as a backup)	11.1	LB/H	
TX-0600	THOMAS C. FERGUSON POWER PLANT	09/01/2011 ACT	Natural gas-fired turbines	390	MW	Particulate matter, total < 2.5 µ (TPM2.5)	pipeline quality natural gas	33.43	LB/H	1-H
TX-0618	CHANNEL ENERGY CENTER LLC	10/15/2012 ACT	Combined Cycle Turbine	180	MW	Particulate matter, total (TPM)	Good combustion and the use of gaseous fuel	27	LB/H	
TX-0618	CHANNEL ENERGY CENTER LLC	10/15/2012 ACT	Combined Cycle Turbine	180	MW	Particulate matter, total < 10 µ (TPM10)	good combustion and the use of gaseous fuel	27	LB/H	
TX-0618	CHANNEL ENERGY CENTER LLC	10/15/2012 ACT	Combined Cycle Turbine	180	MW	Particulate matter, total < 2.5 µ (TPM2.5)	good combustion and the use of gaseous fuel	27	LB/H	
TX-0619	DEER PARK ENERGY CENTER	09/26/2012 ACT	Combined Cycle Turbine	180	MW	Particulate matter, total (TPM)	good combustion and use of natural gas	27	LB/H	
TX-0619	DEER PARK ENERGY CENTER	09/26/2012 ACT	Combined Cycle Turbine	180	MW	Particulate matter, total < 10 µ (TPM10)	good combustion and the use of natural gas	27	LB/H	
TX-0619	DEER PARK ENERGY CENTER	09/26/2012 ACT	Combined Cycle Turbine	180	MW	Particulate matter, total < 2.5 µ (TPM2.5)		27	LB/H	
TX-0620	ES JOSLIN POWER PLANT	09/12/2012 ACT	Combined cycle gas turbine	395	MW	Particulate matter, total < 2.5 µ (TPM2.5)		18	LB/H	PER TURBINE
TX-0620	ES JOSLIN POWER PLANT	09/12/2012 ACT	Combined cycle gas turbine	395	MW	Particulate matter, total < 10 µ (TPM10)	good combustion and natural gas as fuel	18	LB/H	PER TURBINE
TX-0620	ES JOSLIN POWER PLANT	09/12/2012 ACT	Combined cycle gas turbine	395	MW	Particulate matter, total (TPM)	good combustion and natural gas as fuel	18	LB/H	PER TURBINE
TX-0641	PINECREST ENERGY CENTER	12/12/2013 ACT	combined cycle turbine	700	MW	Particulate matter, total < 2.5 µ (TPM2.5)	pipeline quality natural gas and good combustion practices	26.2	LB/H	
*TX-0660	FGE TEXAS POWER I AN D FGE TEXAS POWER II	03/24/2034 ACT	Alstom Turbine	2307	MW	Particulate matter, total < 2.5 µ (TPM2.5)	Low sulfur fuel, good combustion practices	2	PPMVD	
TX-0672	CORPUS CHRISTI LIQUEFACTION PLANT	09/12/2014 ACT	Refrigeration compressor turbines	40000	hp	Particulate matter, total < 2.5 µ (TPM2.5)		0.72	LB/H	1 HOUR
TX-0672	CORPUS CHRISTI LIQUEFACTION PLANT	09/12/2014 ACT	Refrigeration compressor turbines	40000	hp	Particulate matter, total < 2.5 µ (TPM2.5)		0.72	LB/H	1 HOUR
TX-0678	FREEPORT LNG PRETREATMENT FACILITY	07/16/2014 ACT	Combustion Turbine	87	MW	Particulate matter, total < 2.5 µ (TPM2.5)		15.22	LB/H	
TX-0689	CEDAR BAYOU ELECTRIC GENERATION STATION	08/29/2014 ACT	Combined cycle natural gas turbines	221	MW	Particulate matter, filterable < 2.5 µ (FPM2.5)	Good combustion practices, natural gas	0		
TX-0698	BAYPORT COMPLEX	09/05/2013 ACT	(4) cogeneration turbines	90	MW	Particulate matter, total < 2.5 µ (TPM2.5)		0		
TX-0708	LA PALOMA ENERGY CENTER	02/07/2013 ACT	(2) combined cycle turbines	650	MW	Particulate matter, total < 2.5 µ (TPM2.5)		0		
TX-0709	SAND HILL ENERGY CENTER	09/13/2013 ACT	Natual gas-fired combined cycle turbines	1719	MW	Particulate matter, total < 2.5 µ (TPM2.5)		0		
TX-0710	VICTORIA POWER STATION	12/01/2014 ACT	combined cycle turbine	897	MW	Particulate matter, total < 2.5 µ (TPM2.5)		0		
TX-0711	TRINIDAD GENERATING FACILITY	11/20/2014 ACT	combined cycle turbine	497	MW	Particulate matter, total < 2.5 µ (TPM2.5)		0		
TX-0713	TENASKA BROWNSVILLE GENERATING STATION	04/29/2014 ACT	(2) combined cycle turbines	774	MW	Particulate matter, total < 2.5 µ (TPM2.5)		0		
TX-0714	S R BERTRON ELECTRIC GENERATING STATION	12/19/2014 ACT	(2) combined cycle turbines	240	MW	Particulate matter, total < 2.5 µ (TPM2.5)		0		
TX-0730	COLORADO BEND ENERGY CENTER	04/01/2015 ACT	Combined-cycle gas turbine electric generating facility	1300	MW	Particulate matter, total (TPM)	efficient combustion, natural gas fuel	43	LB/H	
TX-0730	COLORADO BEND ENERGY CENTER	04/01/2015 ACT	Combined-cycle gas turbine electric generating facility	1300	MW	Particulate matter, total < 10 µ (TPM10)	efficient combustion, natural gas fuel	43	LB/H	
TX-0730	COLORADO BEND ENERGY CENTER	04/01/2015 ACT	Combined-cycle gas turbine electric generating facility	1300	MW	Particulate matter, total < 2.5 µ (TPM2.5)	efficient combustion, natural gas fuel	43	LB/H	
TX-0751	EAGLE MOUNTAIN STEAM ELECTRIC STATION	06/18/2015 ACT	Combined Cycle Turbines (>25 MW) 4E* natural gas	210	MW	Particulate matter, total < 10 µ (TPM10)		35.47	LB/H	
TX-0751	EAGLE MOUNTAIN STEAM ELECTRIC STATION	06/18/2015 ACT	Combined Cycle Turbines (>25 MW) 4E* natural gas	210	MW	Particulate matter, total < 2.5 µ (TPM2.5)		35.47	LB/H	
TX-0767	LON C. HILL POWER STATION	30/02/2015 ACT	Combined Cycle Turbines (>25 MW)	395	MW	Particulate matter, total < 10 µ (TPM10)	Good combustion practices and use of pipeline quality natural gas	16	LB/HR	
TX-0767	LON C. HILL POWER STATION	30/02/2015 ACT	Combined Cycle Turbines (>25 MW)	395	MW	Particulate matter, total < 2.5 µ (TPM2.5)	Good combustion practices and use of pipeline quality natural gas	16	LB/HR	
TX-0773	FGE EAGLE PINES PROJECT	11/04/2015 ACT	Combined Cycle Turbines (>25 MW)	321	MW	Particulate matter, total < 10 µ (TPM10)		21.4	LB/H	
TX-0773	FGE EAGLE PINES PROJECT	11/04/2015 ACT	Combined Cycle Turbines (>25 MW)	321	MW	Particulate matter, total < 2.5 µ (TPM2.5)		21.4	LB/H	
TX-0788	NECHES STATION	03/24/2036 ACT	Large Combustion Turbines >25 MW	212	MW	Particulate matter, total < 10 µ (TPM10)	good combustion practices, low sulfur fuel	13.4	LB/H	
TX-0788	NECHES STATION	03/24/2036 ACT	Large Combustion Turbines >25 MW	212	MW	Particulate matter, total < 2.5 µ (TPM2.5)	good combustion practices, low sulfur fuel	13.4	LB/H	
TX-0790	PORT ARTHUR LNG EXPORT TERMINAL	02/17/2036 ACT	Refrigeration Compression Turbines	10	M TONNES/YR	Particulate matter, total < 10 µ (TPM10)		11.07	LB/H	
TX-0790	PORT ARTHUR LNG EXPORT TERMINAL	02/17/2036 ACT	Refrigeration Compression Turbines	10	M TONNES/YR	Particulate matter, total < 2.5 µ (TPM2.5)		11.07	LB/H	
TX-0790	PORT ARTHUR LNG EXPORT TERMINAL	02/17/2036 ACT	Simple Cycle Electrical Generation Gas Turbines 15.230	34	MW	Particulate matter, total < 10 µ (TPM10)	Good combustion practices and use of low carbon, low sulfur fuel	2.32	LB/H	
TX-0790	PORT ARTHUR LNG EXPORT TERMINAL	02/17/2036 ACT	Simple Cycle Electrical Generation Gas Turbines 15.230	34	MW	Particulate matter, total < 2.5 µ (TPM2.5)	Good combustion practices and use of low carbon, low sulfur fuel	2.32	LB/H	
TX-0819	GAINES COUNTY POWER PLANT	04/28/2017 ACT	Simple Cycle Turbine	2275	MW	Particulate matter, total (TPM)	Pipeline quality natural gas; limited hours; good combustion practices	8.5	TYR	
TX-0819	GAINES COUNTY POWER PLANT	04/28/2017 ACT	Simple Cycle Turbine	2275	MW	Particulate matter, total < 10 µ (TPM10)	Pipeline quality natural gas; limited hours; good combustion practices	8.5	TYR	
TX-0819	GAINES COUNTY POWER PLANT	04/28/2017 ACT	Simple Cycle Turbine	2275	MW	Particulate matter, total < 2.5 µ (TPM2.5)	Pipeline quality natural gas; limited hours; good combustion practices	8.5	TYR	
TX-0819	GAINES COUNTY POWER PLANT	04/28/2017 ACT	Combined Cycle Turbine with Heat Recovery Steam Generator, fired Duct Burners, and Steam Turbine Generator	426	MW	Particulate matter, total (TPM)	Pipeline quality natural gas; good combustion practices	0		
TX-0819	GAINES COUNTY POWER PLANT	04/28/2017 ACT	Combined Cycle Turbine with Heat Recovery Steam Generator, fired Duct Burners, and Steam Turbine Generator	426	MW	Particulate matter, total < 10 µ (TPM10)	Pipeline quality natural gas; good combustion practices	0		
TX-0819	GAINES COUNTY POWER PLANT	04/28/2017 ACT	Combined Cycle Turbine with Heat Recovery Steam Generator, fired Duct Burners, and Steam Turbine Generator	426	MW	Particulate matter, total < 2.5 µ (TPM2.5)	Pipeline quality natural gas; good combustion practices	0		
TX-0834	MONTGOMERY COUNTY POWER STATION	03/30/2018 ACT	Combined Cycle Turbine	2685	MMBTU/HR/UNIT	Particulate matter, total (TPM)	PIPELINE NATURAL GAS, GOOD COMBUSTION	125.7	TON/YR	
TX-0834	MONTGOMERY COUNTY POWER STATION	03/30/2018 ACT	Combined Cycle Turbine	2685	MMBTU/HR/UNIT	Particulate matter, total < 10 µ (TPM10)	PIPELINE NATURAL GAS, GOOD COMBUSTION	125.7	TON/YR	
TX-0834	MONTGOMERY COUNTY POWER STATION	03/30/2018 ACT	Combined Cycle Turbine	2685	MMBTU/HR/UNIT	Particulate matter, total < 2.5 µ (TPM2.5)	PIPELINE NATURAL GAS, GOOD COMBUSTION	125.7	TON/YR	
VA-0315	WARREN COUNTY POWER PLANT - DOMINION	12/17/2030 ACT	COMBINED CYCLE TURBINE & DUCT BURNER, 3	2986	MMBTU/H	Particulate matter, total < 10 µ (TPM10)	Natural Gas only, fuel has maximum sulfur content of 0.0003% by weight.	8	LB/H	3 HR AVG. (WITHOUT DUCT BURNER FIRING)
VA-0315	WARREN COUNTY POWER PLANT - DOMINION	12/17/2030 ACT	COMBINED CYCLE TURBINE & DUCT BURNER, 3	2986	MMBTU/H	Particulate matter, total < 2.5 µ (TPM2.5)	Natural Gas only, fuel has maximum sulfur content of 0.0003% by weight.	8	LB/H	3 HR AVG. (WITHOUT DUCT BURNER FIRING)
VA-0319	GATEWAY COGENERATION 1, LLC - SMART WATER PROJECT	08/27/2012 ACT	COMBUSTION TURBINES, (2)	993	MMBTU/H	Particulate matter, total < 2.5 µ (TPM2.5)	Clean burning fuels and good combustion practices.	5	LB/H	3 H AVG
VA-0319	GATEWAY COGENERATION 1, LLC - SMART WATER PROJECT	08/27/2012 ACT	COMBUSTION TURBINES, (2)	993	MMBTU/H	Particulate matter, total < 10 µ (TPM10)	Clean burning fuels and good combustion practices.	5	LB/H	3 H AVG
VA-0321	BRUNSWICK COUNTY POWER STATION	03/12/2013 ACT	COMBUSTION TURBINE GENERATORS, (3)	3442	MMBTU/H	Particulate matter, total < 2.5 µ (TPM2.5)	Low sulfur/carbon fuel and good combustion practices.	0.0083	LB/MMBTU	3 H AVG/WITHOUT DUCT BURNING
VA-0321	BRUNSWICK COUNTY POWER STATION	03/12/2013 ACT	COMBUSTION TURBINE GENERATORS, (3)	3442	MMBTU/H	Particulate matter, total < 10 µ (TPM10)	Low sulfur/carbon fuel and good combustion practices.	0.0083	LB/MMBTU	3 H AVG/WITHOUT DUCT BURNING
VA-0325	GREENSVILLE POWER STATION	06/17/2036 ACT	COMBUSTION TURBINE GENERATOR WITH DUCT-FIRED HEAT RECOVERY STEAM GENERATORS (3)	3227	MMBTU/HR	Particulate matter, filterable < 2.5 µ (FPM2.5)	Pipeline Quality Natural Gas	0.0039	LB/MMBTU	AVG OF 3 TEST RUNS
VA-0325	GREENSVILLE POWER STATION	06/17/2036 ACT	COMBUSTION TURBINE GENERATOR WITH DUCT-FIRED HEAT RECOVERY STEAM GENERATORS (3)	3227	MMBTU/HR	Particulate matter, total < 10 µ (TPM10)	Low sulfur/carbon fuel and good combustion pratices	0.0039	LB/MMBTU	AVG OF 3 TEST RUNS
VA-0328	C4GT, LLC	04/26/2018 ACT	GE Combustion Turbine - Option 1 - Normal Operation	34000	MMCF/YR	Particulate matter, total < 10 µ (TPM10)	good combustion practices and the use of pipeline quality natural gas with a maximum sulfur conten	0.0069	LB/MMBTU	WITHOUT DUC AV OF 3 TEST RUNS
VA-0328	C4GT, LLC	04/26/2018 ACT	GE Combustion Turbine - Option 1 - Normal Operation	34000	MMCF/YR	Particulate matter, total < 2.5 µ (TPM2.5)	good combustion practices and the use of pipeline quality natural gas with a maximum sulfur conten	0.0069	LB/MMBTU	WITHOUT DUC AV OF 3 TEST RUNS
VA-0328	C4GT, LLC	04/26/2018 ACT	Siemens Combustion Turbine - Option 2 - Normal Operation	35000	MMCF/YR	Particulate matter, total < 10 µ (TPM10)	good combustion practices and the use of pipeline quality natural gas with a maximum sulfur conten	0.0065	LB/MMBTU	AV OF 3 TEST RUNS/WITHOUT DUCT BURNING
VA-0328	C4GT, LLC	04/26/2018 ACT	Siemens Combustion Turbine - Option 2 - Normal Operation	35000	MMCF/YR	Particulate matter, total < 2.5 µ (TPM2.5)	good combustion practices and the use of pipeline quality natural gas with a maximum sulfur conten	0.0065	LB/MMBTU	AV OF 3 TEST RUNS/WITHOUT DUCT BURNING
WV-0025	MOUNDSVILLE COMBINED CYCLE POWER PLANT	11/21/2014 ACT	Combined Cycle Turbine/Duct Burner	2419.61	mmBtu/hr	Particulate matter, total < 2.5 µ (TPM2.5)	Good Combustion Practices, Inlet Air Filtration, & use of Natural Gas	8.9	LB/H	
*WV-0029	HARRISON COUNTY POWER PLANT	01/27/2018 ACT	GE 7HA.02 Turbine	3496.2	mmBtu/hr	Particulate matter, total (TPM)	Air Filter, Use of Natural Gas, Good Combustion Practices	18.2	LB/HR	
*WV-0032	BROOKE COUNTY POWER PLANT	09/18/2018 ACT	GE 7HA.01 Turbine	2737.7	mmBtu/hr	Particulate matter, total (TPM)	Air Filter, Use of Natural Gas, Good Combustion Practices	16.9	LB/HR	
WY-0070	CHEYENNE PRAIRIE GENERATING STATION	08/28/2012 ACT	Simple Cycle Turbine (EP03)	40	MW	Particulate matter, total (TPM)	good combustion practices	4	LB/H	3-HOUR AVERAGE
WY-0070	CHEYENNE PRAIRIE GENERATING STATION	08/28/2012 ACT	Combined Cycle Turbine (EP01)	40	MW	Particulate matter, total (TPM)	good combustion practices	4	LB/H	3-HOUR AVERAGE
WY-0070	CHEYENNE PRAIRIE GENERATING STATION	08/28/2012 ACT	Combined Cycle Turbine (EP02)	40	MW	Particulate matter, total (TPM)	good combustion practices	4	LB/H	3-HOUR AVERAGE
WY-0070	CHEYENNE PRAIRIE GENERATING STATION	08/28/2012 ACT	Simple Cycle Turbine (EP05)	40	MW	Particulate matter, total (TPM)	good combustion practices	4	LB/H	3-HOUR AVERAGE

RBLC SUMMARY FOR COMBUSTION TURBINES - H_2SO_4									
RBLCID	FACILITY_NAME	PERMIT_ISSUANCE_DATE	PROCESS_NAME	THROUGHPUT	THROUGHPUT_UNIT	POLLUTANT	CONTROL_METHOD_DESCRIPTION	EMISSION_LIMIT_1	EMISSION_LIMIT_1_UNIT	EMISSION_LIMIT_1_AVG_TIME_CONDITION
IA-0107	MARSHALLTOWN GENERATING STATION	04/14/2014 ACT	Combustion turbine #1 - combined cycle	2258	mmBtu/hr	Sulfuric Acid (mist, vapors, etc)		0.0032	LB/MMBTU	3 ONE-HOUR TEST RUNS
IA-0107	MARSHALLTOWN GENERATING STATION	04/14/2014 ACT	Combustion turbine #2 -combined cycle	2258	mmBtu/hr	Sulfuric Acid (mist, vapors, etc)		0.0032	LB/MMBTU	AVERAGE OF 3 ONE-HOUR TEST RUNS
IL-0129	CPV THREE RIVERS ENERGY CENTER	07/30/2018 ACT	Combined Cycle Combustion Turbines	3474	mmBtu/hr	Sulfuric Acid (mist, vapors, etc)		0		
*IL-0130	JACKSON ENERGY CENTER	12/31/2018 ACT	Combined-Cycle Combustion Turbine	3864	mmBtu/hr	Sulfuric Acid (mist, vapors, etc)		5	POUNDS/HOUR	3-HR BLOCK AVG
IN-0158	ST. JOSEPH ENEGRY CENTER, LLC	12/03/2012 ACT	FOUR (4) NATURAL GAS COMBINED CYCLE COMBUSTION TURBINES	2300	MMBTU/H	Sulfuric Acid (mist, vapors, etc)	FUEL SPECIFICATION	0.75	GR S/100SCF FUEL	
MA-0039	SALEM HARBOR STATION REDEVELOPMENT	01/30/2014 ACT	Combustion Turbine with Duct Burner	2449	MMBTU/H	Sulfuric Acid (mist, vapors, etc)		0.001	LB/MMBTU	1 HR AVG, DOES NOT APPLY DURING SUSD
MD-0041	CPV ST. CHARLES	04/23/2014 ACT	2 COMBINED-CYCLE COMBUSTION TURBINES	725	MEGAWATT	Sulfuric Acid (mist, vapors, etc)	EXCLUSIVE USE OF PIPELINE QUALITY NATURAL GAS	2.2	LB/H	3 HR BLOCK AVG
*MD-0042	WILDCAT POINT GENERATION FACILITY	04/08/2014 ACT	2 COMBINED CYCLE COMBUSTION TURBINES, WITH DUCT FIRING	1000	MW	Sulfuric Acid (mist, vapors, etc)	EXCLUSIVE USE OF PIPELINE QUALITY NATURAL GAS	12.5	LB/H	3-HOUR BLOCK AVERAGE
*MD-0042	WILDCAT POINT GENERATION FACILITY	04/08/2014 ACT	2 COMBINED CYCLE COMBUSTION TURBINES, WITHOUT DUCT FIRING	270	MW	Sulfuric Acid (mist, vapors, etc)	EXCLUSIVE USE OF PIPELINE QUALITY NATURAL GAS	9.7	LB/H	3-HOUR BLOCK AVERAGE
MD-0045	MATTAWOMAN ENERGY CENTER	11/13/2015 ACT	2 COMBINED-CYCLE COMBUSTION TURBINES	286	MW	Sulfuric Acid (mist, vapors, etc)	INITIAL AND ANNUAL PERFORMANCE TEST USING EPA METHOD 8 OR EQUIVALENT METHOD APPROVED BY MDE	4.6	LB/H	3-HR BLOCK AVERAGE, W/OUT DUCT FIRING
MI-0432	NEW COVERT GENERATING FACILITY	07/30/2018 ACT	FG-TURB/DB1-3 (3 combined cycle combustion turbine and heat recovery steam generators	1230	MW	Sulfuric Acid (mist, vapors, etc)	Use of clean fuel (natural gas) with a fuel sulfur limit of 0.8 grains per 100 standard cubic feet of natural gas.	1	LB/H	HOURLY; EACH CT/HRSG TRAIN
MI-0433	MEC NORTH, LLC AND MEC SOUTH LLC	06/29/2018 ACT	EUCTGHRSG (South Plant): A combined cycle natural gas-fired combustion turbine gen	500	MW	Sulfuric Acid (mist, vapors, etc)	Good combustion practices and the use of pipeline quality natural gas.	2.7	LB/H	HOURLY
MI-0433	MEC NORTH, LLC AND MEC SOUTH LLC	06/29/2018 ACT	EUCTGHRSG (North Plant): A combined-cycle natural gas-fired combustion turbine gen	500	MW	Sulfuric Acid (mist, vapors, etc)	Good combustion practices and the use of pipeline quality natural gas.	2.7	LB/H	HOURLY
NJ-0081	PSEG FOSSIL LLC SEWAREN GENERATING STATION	03/07/2014 ACT	Combined Cycle Combustion Turbine -Siemens turbine without Duct Burner	33691	MMCF/YR	Sulfuric Acid (mist, vapors, etc)	USE OF NATURAL GAS A CLEAN BURNING FUEL	2.79	LB/H	
NJ-0081	PSEG FOSSIL LLC SEWAREN GENERATING STATION	03/07/2014 ACT	COMBINED CYCLE COMBUSTION TURBINE WITH DUCT BURNER - SIEMENS	33691	MMCF/YR	Sulfuric Acid (mist, vapors, etc)	Use of natural gas a clean burning fuel	2.79	LB/H	
NJ-0081	PSEG FOSSIL LLC SEWAREN GENERATING STATION	03/07/2014 ACT	COMBINED CYCLE COMBUSTION TURBINE WITH DUCT BURNER - GENERAL ELECTRIC	33691	MMCF/YR	Sulfuric Acid (mist, vapors, etc)	Use of natural gas a clean burning fuel and a low sulfur fuel	2.93	LB/H	
NJ-0081	PSEG FOSSIL LLC SEWAREN GENERATING STATION	03/07/2014 ACT	COMBINED CYCLE COMBUSTION TURBINE WITHOUT DUCT BURNER - GENERAL ELECTR	33691	MMCF/YR	Sulfuric Acid (mist, vapors, etc)	Use of natural gas a low sulfur fuel	2.74	LB/H	
NJ-0082	WEST DEPTFORD ENERGY STATION	07/18/2014 ACT	Combined Cycle Combustion Turbine without Duct Burner	20282	MMCF/YR	Sulfuric Acid (mist, vapors, etc)	Use of natural gas a clean burning fuel	0.74	LB/H	
NJ-0082	WEST DEPTFORD ENERGY STATION	07/18/2014 ACT	Combined Cycle Combustion Turbine with Duct Burner	20282	MMCF/YR	Sulfuric Acid (mist, vapors, etc)	Use of natural gas a clean burning fuel	0.98	LB/H	
NJ-0085	MIDDLESEX ENERGY CENTER, LLC	07/19/2016 ACT	Combined Cycle Combustion Turbine firing Natural Gas with Duct Burner	4000	h/yr	Sulfuric Acid (mist, vapors, etc)	USE OF NATURAL GAS A LOW SULFUR FUEL	4.26	LB/H	AV OF THREE ONE HSTACK TESTS EVERY 5 YR
NJ-0085	MIDDLESEX ENERGY CENTER, LLC	07/19/2016 ACT	Combined Cycle Combustion Turbine firing Natural Gas without Duct Burner	8040	H/YR	Sulfuric Acid (mist, vapors, etc)	USE OF NATURAL GAS A CLEAN BURNING FUEL	3.61	LB/H	AV OF THREE ONE HSTACK TESTS EVERY 5 YR
NJ-0085	MIDDLESEX ENERGY CENTER, LLC	07/19/2016 ACT	COMBINED CYCLE COMBUSTION TURBINE FIRING ULTRA LOW SULFUR DISTILLATE OIL	720	H/YR	Sulfuric Acid (mist, vapors, etc)	use of ULSD a low sulfur fuel	4.27	LB/H	AV OF THREE ONE HSTACK TESTS EVERY 5 YR
NY-0104	CPV VALLEY ENERGY CENTER	08/01/2013 ACT	Turbines - diesel fuel	0		Sulfuric Acid (mist, vapors, etc)	Ultra low sulfur diesel with maximum sulfur content 0.0015 percent.	0.0005	LB/MMBTU	1 H
NY-0104	CPV VALLEY ENERGY CENTER	08/01/2013 ACT	Turbines and duct burners - NG	0		Sulfuric Acid (mist, vapors, etc)	Natural gas	0.0007	LB/MMBTU	1 H
OH-0356	DUKE ENERGY HANGING ROCK ENERGY	12/18/2012 ACT	Turbines (4) (model GE 7FA) Duct Burners Off	172	MW	Sulfuric Acid (mist, vapors, etc)	Burning natural gas in an efficient combustion turbine and using low sulfur fuel.	0.18	LB/H	
OH-0356	DUKE ENERGY HANGING ROCK ENERGY	12/18/2012 ACT	Turbines (4) (model GE 7FA) Duct Burners On	172	MW	Sulfuric Acid (mist, vapors, etc)	Burning natural gas in an efficient combustion turbine and using low sulfur fuel.	0.23	LB/H	
OH-0360	CARROLL COUNTY ENERGY	11/05/2013 ACT	Combined Cycle Combustion Turbines (two, identical) (P001 and P002)	2045	MMBTU/H	Sulfuric Acid (mist, vapors, etc)	natural gas only with maximum sulfur content of 1.0 gr/dscf	0.0016	LB/MMBTU	WITH DUCT BURNER. SEE NOTES.
OH-0363	NTE OHIO, LLC	11/05/2014 ACT	Turbine generator with HRSG and duct burners (P001)	3278.5	MMBTU/H	Sulfuric Acid (mist, vapors, etc)	Used of natural gas.	4.3	LB/H	WITH DUCT BURNER. SEE NOTES.
OH-0365	ROLLING HILLS GENERATING, LLC	05/20/2015 ACT	Combustion Turbines, Scenario 1 (4, identical) (P001, P002, P004, P005)	2022	MMBTU/H	Sulfuric Acid (mist, vapors, etc)	good combustion practices along with clean fuels. Firing only natural gas with a sulfur content of 0.25 grains per 1	2	T/YR	PER ROLLING 12 MONTH PERIOD. SEE NOTES.
OH-0365	ROLLING HILLS GENERATING, LLC	05/20/2015 ACT	Combustion Turbines, Scenario 2 (4, identical) (P001, P002, P004, P005)	2144	MMBTU/H	Sulfuric Acid (mist, vapors, etc)	good combustion practices along with clean fuels. Firing only natural gas with a sulfur content of 0.25 grains per 1	2.1	T/YR	PER ROLLING 12 MONTH PERIOD. SEE NOTES.
OH-0366	CLEAN ENERGY FUTURE - LORDSTOWN, LLC	08/25/2015 ACT	Combined Cycle Combustion Turbines (two, identical) (P001 and P002)	2725	MMBTU/H	Sulfuric Acid (mist, vapors, etc)	Low sulfur fuel	3.4	LB/H	WITH DUCT BURNER. SEE NOTES.
OH-0367	SOUTH FIELD ENERGY LLC	09/23/2016 ACT	Combined Cycle Combustion Turbines (two, identical) (P001 and P002)	3131	MMBTU/H	Sulfuric Acid (mist, vapors, etc)	Low sulfur fuels	6.96	LB/H	WITH DUCT BURNER. SEE NOTES.
OH-0370	TRUMBULL ENERGY CENTER	09/07/2017 ACT	Combined Cycle Combustion Turbines (two, identical) (P001 and P002)	3025	MMBTU/H	Sulfuric Acid (mist, vapors, etc)	Low sulfur fuel	3.7	LB/H	WITH DUCT BURNER. SEE NOTES.
OH-0372	OREGON ENERGY CENTER	09/27/2017 ACT	Combined Cycle Combustion Turbines (two, identical) (P001 and P002)	3055	MMBTU/H	Sulfuric Acid (mist, vapors, etc)	Low sulfur fuel	3.7	LB/H	WITH DUCT BURNER. SEE NOTES.
OH-0374	GUERNSEY POWER STATION LLC	10/23/2017 ACT	Combined Cycle Combustion Turbines (3, identical) (P001 to P003)	3516	MMBTU/H	Sulfuric Acid (mist, vapors, etc)	pipeline quality natural gas with a maximum sulfur content not exceed 0.50 grain/100 scf	0.0011	LB/MMBTU	SEE NOTES.
OH-0375	LONG RIDGE ENERGY GENERATION LLC - HANNIBAL POWER	11/07/2017 ACT	General Electric Combustion Turbine (P004)	3544	MMBTU/H	Sulfuric Acid (mist, vapors, etc)	natural gas or a natural gas and ethane mixture only	0.0011	LB/MMBTU	
OH-0375	LONG RIDGE ENERGY GENERATION LLC - HANNIBAL POWER	11/07/2017 ACT	Mitsubishi Combustion Turbine (P005)	3320	MMBTU/H	Sulfuric Acid (mist, vapors, etc)	natural gas or a natural gas and ethane mixture only	0.0009	LB/MMBTU	
OH-0375	LONG RIDGE ENERGY GENERATION LLC - HANNIBAL POWER	11/07/2017 ACT	Siemens Combustion Turbine (P006)	3602	MMBTU/H	Sulfuric Acid (mist, vapors, etc)	natural gas or a natural gas and ethane mixture only	5.2	X10-4 LB/MMBTU	WITH DUCT BURNER. SEE NOTES.
OH-0377	HARRISON POWER	04/19/2018 ACT	General Electric (GE) Combustion Turbines (P005 & P006)	3459.6	MMBTU/H	Sulfuric Acid (mist, vapors, etc)	Good combustion practices and pipeline quality natural gas	0.001	LB/MMBTU	WITH DUCT BURNER. SEE NOTES.
OH-0377	HARRISON POWER	04/19/2018 ACT	Mitsubishi Hitachi Power Systems (MHPS) Combustion Turbines (P007 & P008)	3231	MMBTU/H	Sulfuric Acid (mist, vapors, etc)	Good combustion practices and pipeline quality natural gas	0.0022	LB/MMBTU	
OR-0050	TROUTDALE ENERGY CENTER, LLC	03/05/2014 ACT	Mitsubishi M501-GAC combustion turbine, combined cycle configuration with duct bur	2988	MMBTU/H	Sulfuric Acid (mist, vapors, etc)	Utilize only natural gas or ULSD fuel.	0		
OR-0050	TROUTDALE ENERGY CENTER, LLC	03/05/2014 ACT	GE LMS-100 combustion turbines, simple cycle with water injection	1690	MMBTU/H	Sulfuric Acid (mist, vapors, etc)	Utilize only natural gas or ULSD fuel.	0		
PA-0278	MOXIE LIBERTY LLC/ASYLUM POWER PLT	10/10/2012 ACT	Combined-cycle Turbines (2) - Natural gas fired	3277	MMBTU/H	Sulfuric Acid (mist, vapors, etc)		0.0002	LB/MMBTU	
PA-0288	SUNBURY GENERATION LP/SUNBURY SES	04/01/2013 ACT	Combined Cycle Combustion Turbine AND DUCT BURNER (3)	2538000	MMBTU/H	Sulfuric Acid (mist, vapors, etc)		0.0018	LB/MMBTU	
PA-0296	BERKS HOLLOW ENERGY ASSOC LLC/ONTELAUNEE	12/17/2013 ACT	Turbine, Combined Cycle, #1 and #2	3046	MMBTU/H	Sulfuric Acid (mist, vapors, etc)		2.97	T/YR	
*PA-0298	FUTURE POWER PA/GOOD SPRINGS NGCC FACILITY	03/04/2014 ACT	Turbine, COMBINED CYCLE UNIT (Siemens 5000)	2267	MMBTU/H	Sulfuric Acid (mist, vapors, etc)		3.4	LB/H	WITH DUCT BURNER
PA-0306	TENASKA PA PARTNERS/WESTMORELAND GEN FAC	02/12/2016 ACT	Large combustion turbine	0		Sulfuric Acid (mist, vapors, etc)	Low sulfur fuel and good combustion practices	0.0006	LB/MMBTU	HHV
PA-0307	YORK ENERGY CENTER BLOCK 2 ELECTRICITY GENERATION PROJ	06/15/2015 ACT	Two combined cycle combustion turbines ULSD fired with duct burner NG fired	0		Sulfuric Acid (mist, vapors, etc)	Good combustion practices and low sulfur fuels	0.0017	LB/MMBTU	
PA-0307	YORK ENERGY CENTER BLOCK 2 ELECTRICITY GENERATION PROJ	06/15/2015 ACT	Two Combine Cycle Combustion Turbine with Duct Burner	3001.57	MCF/hr	Sulfuric Acid (mist, vapors, etc)		0.0011	LB/MMBTU	
PA-0309	LACKAWANNA ENERGY CTR/JESSUP	12/23/2015 ACT	Combustion turbine with duct burner	3304.3	MMBtu/hr	Sulfuric Acid (mist, vapors, etc)	Exclusive natural gas	0.0009	LB/MMBTU	
PA-0310	CPV FAIRVIEW ENERGY CENTER	09/02/2016 ACT	Combustion turbine and HRSG with duct burner NG only	3338	MMBtu/hr	Sulfuric Acid (mist, vapors, etc)	ULSD fuel (CCCT only - duct burner is not fired with ULSD), good combustion practices	0.0014	LB/MMBTU	
PA-0310	CPV FAIRVIEW ENERGY CENTER	09/02/2016 ACT	Combustion turbine and HRSG without duct burner NG only	0		Sulfuric Acid (mist, vapors, etc)	Low sulfur fuels and good combustion practices	0.0014	LB/MMBTU	
PA-0310	CPV FAIRVIEW ENERGY CENTER	09/02/2016 ACT	Combustion turbine and HRSG without duct burner ULSD	0		Sulfuric Acid (mist, vapors, etc)	Water/steam injection, ULSD fuel (CCCT only - duct burner is not fired with ULSD), good combustion practices	0.0013	LB/MMBTU	
PA-0310	CPV FAIRVIEW ENERGY CENTER	09/02/2016 ACT	Combustion turbine and HRSG with duct burner - firing NG blend with ethane	0		Sulfuric Acid (mist, vapors, etc)		0		
PA-0310	CPV FAIRVIEW ENERGY CENTER	09/02/2016 ACT	Combustion turbine and HRSG without duct burner - firing NG blend with ethane	0		Sulfuric Acid (mist, vapors, etc)		0		
PA-0311	MOXIE FREEDOM GENERATION PLANT	09/01/2015 ACT	Combustion Turbine With Duct Burner	3727	MMBtu/hr	Sulfuric Acid (mist, vapors, etc)		0.0009	LB/MMBTU	
PA-0311	MOXIE FREEDOM GENERATION PLANT	09/01/2015 ACT	Combustion Turbine without Duct Burner	0		Sulfuric Acid (mist, vapors, etc)		0.0009	LB/MMBTU	
*PA-0319	RENAISSANCE ENERGY CENTER	08/27/2018 ACT	COMBUSTION TURBINE UNIT w/o DUCT BURNERS UNIT	2665.9	MMBtu/hr	Sulfuric Acid (mist, vapors, etc)		5.98	TPY	
TX-0600	THOMAS C. FERGUSON POWER PLANT	09/01/2011 ACT	Natural gas-fired turbines	390	MW	Sulfuric Acid (mist, vapors, etc)	pipeline quality natural gas	13.68	LB/H	1-H
TX-0714	S R BERTRON ELECTRIC GENERATING STATION	12/19/2014 ACT	(2) combined cycle turbines	240	MW	Sulfuric Acid (mist, vapors, etc)		0.5	GR S ULFUR/100 DSCF	
TX-0730	COLORADO BEND ENERGY CENTER	04/01/2015 ACT	Combined-cycle gas turbine electric generating facility	1100	MW	Sulfuric Acid (mist, vapors, etc)	efficient combustion, natural gas fuel	2	GR/100 SCF	1-HOUR
TX-0751	EAGLE MOUNTAIN STEAM ELECTRIC STATION	06/18/2015 ACT	Combined Cycle Turbines (>25 MW) â€" natural gas	210	MW	Sulfuric Acid (mist, vapors, etc)		15.56	LB/H	
TX-0773	FGE EAGLE PINES PROJECT	11/04/2015 ACT	Combined Cycle Turbines (>25 MW)	321	MW	Sulfuric Acid (mist, vapors, etc)	low sulfur fuel	10.4	T/YR	
TX-0788	NECHES STATION	03/24/2016 ACT	Large Combustion Turbines > 25 MW	232	MW	Sulfuric Acid (mist, vapors, etc)	good combustion practices, low sulfur fuel	1	GR/100 SCF	HOURLY
TX-0834	MONTGOMERY COUNTY POWER STATIOIN	03/30/2018 ACT	Combined Cycle Turbine	2635	MMBTU/HR/UNIT	Sulfuric Acid (mist, vapors, etc)	PIPELINE QUALITY NATURAL GAS	1	GR/100 DSCF	
VA-0315	WARREN COUNTY POWER PLANT - DOMINION	12/17/2010 ACT	COMBINED CYCLE TURBINE & DUCT BURNER, 3	2996	MMBTU/H	Sulfuric Acid (mist, vapors, etc)	Natural Gas burning.	0.0001	LB/MMBTU	WITHOUT DUCT BURNER FIRING
VA-0321	BRUNSWICK COUNTY POWER STATION	03/12/2013 ACT	COMBUSTION TURBINE GENERATORS, (3)	3442	MMBTU/H	Sulfuric Acid (mist, vapors, etc)	Low sulfur fuel	0.0006	LB/MMBTU	WITHOUT DUCT BURNING
VA-0325	GREENSVILLE POWER STATION	06/17/2016 ACT	COMBUSTION TURBINE GENERATOR WITH DUCT-FIRED HEAT RECOVERY STEAM GENE	3227	MMBTU/HR	Sulfuric Acid (mist, vapors, etc)	Low Sulfur fuel	0.0006	LB/MMBTU	
VA-0328	C4GT, LLC	04/26/2018 ACT	GE Combustion Turbine - Option 1 - Normal Operation	34000	MMCF/YR	Sulfuric Acid (mist, vapors, etc)	use of natural gas with a sulfur content of no more than 0.4 gr/100scf, 12-mo rolling av	2.5	LB/H	3 HAV/WITHOUT DUCT BURNING
VA-0328	C4GT, LLC	04/26/2018 ACT	Siemens Combustion Turbine - Option 2 - Normal Operation	35000	MMCF/YR	Sulfuric Acid (mist, vapors, etc)	use of natural gas with a sulfur content of no more than 0.4 gr/100scf, 12 mo rolling av.	2.2	LB/H	3 HAV/WITHOUT DB
*WV-0029	HARRISON COUNTY POWER PLANT	03/27/2018 ACT	GE 7HA.02 Turbine	3496.2	mmBtu/hr	Sulfuric Acid (mist, vapors, etc)	Use of Natural Gas	3.8	LB/HR	
*WV-0032	BROOKE COUNTY POWER PLANT	09/18/2018 ACT	GE 7HA.01 Turbine	2737.7	mmBtu/hr	Sulfuric Acid (mist, vapors, etc)	Use of Natural Gas	2.6	LB/HR	

RBLC SUMMARY FOR COMBUSTION TURBINES - CO_2e										
RBLCID	FACILITY_NAME	PERMIT_ISSUANCE_DATE	PROCESS_NAME	THROUGHPUT	THROUGHPUT_UNIT	POLLUTANT	CONTROL_METHOD_DESCRIPTION	EMISSION_LIMIT_1	EMISSION_LIMIT_1_UNIT	EMISSION_LIMIT_1_AVG_TIME_CONDITION
CA-1212	PALMDALE HYBRID POWER PROJECT	10/18/2011 ACT	COMBUSTION TURBINES (NORMAL OPERATION)	154	MW	Carbon Dioxide Equivalent (CO2e)		774	LB/MW-H	365-DAY ROLLING AVG (FACILITYWIDE)
IA-0107	MARSHALLTOWN GENERATING STATION	04/14/2014 ACT	Combustion turbine #1 - combined cycle	2258	mmBtu/hr	Carbon Dioxide Equivalent (CO2e)		1318647	TON/YR	12-MONTH ROLLING
IA-0107	MARSHALLTOWN GENERATING STATION	04/14/2014 ACT	Combustion turbine #2 -combined cycle	2258	mmBtu/hr	Carbon Dioxide Equivalent (CO2e)		1318647	TON/YR	12-MONTH ROLLING TOTAL
IL-0129	CPV THREE RIVERS ENERGY CENTER	07/30/2018 ACT	Combined Cycle Combustion Turbines	3474	mmBtu/hr	Carbon Dioxide Equivalent (CO2e)	Equipment design and proper operation	0		
*IL-0130	JACKSON ENERGY CENTER	12/31/2018 ACT	Combined-Cycle Combustion Turbine	3864	mmBtu/hr	Carbon Dioxide Equivalent (CO2e)	Equipment design and proper operation	4733910	TONS/YEAR	12-MONTH ROLLING AVERAGE
IN-0158	ST. JOSEPH ENEGRY CENTER, LLC	12/03/2012 ACT	FOUR (4) NATURAL GAS COMBINED CYCLE COMBUSTION TURBINES	2300	MMBTU/H	Carbon Dioxide Equivalent (CO2e)	HIGH THERMAL EFFICIENCY DESIGN	7646	BTU/KW-H	
KS-0029	THE EMPIRE DISTRICT ELECTRIC COMPANY	07/14/2015 ACT	Combined cycle combustion turbine	250	MW	Carbon Dioxide Equivalent (CO2e)		1022755.9	TONS PER YEAR	12-MONTH ROLLING AVERAGE
LA-0257	SABINE PASS LNG TERMINAL	12/06/2011 ACT	Simple Cycle Refrigeration Compressor Turbines (16)	286	MMBTU/H	Carbon Dioxide Equivalent (CO2e)	Good combustion/operating practices and fueled by natural gas - use GE LM2500+G4 turbines	4872107	TONS/YR	ANNUAL MAXIMUM FROM THE FACILITYWIDE
LA-0257	SABINE PASS LNG TERMINAL	12/06/2011 ACT	Combined Cycle Refrigeration Compressor Turbines (8)	286	MMBTU/H	Carbon Dioxide Equivalent (CO2e)	Good combustion/operating practices and fueled by natural gas - use GE LM2500+G4 turbines	4872107	TONS/YEAR	ANNUAL MAXIMUM FROM THE FACILITYWIDE
LA-0257	SABINE PASS LNG TERMINAL	12/06/2011 ACT	Simple Cycle Generation Turbines (2)	286	MMBTU/H	Carbon Dioxide Equivalent (CO2e)	Good combustion/operating practices and fueled by natural gas - use GE LM2500+G4 turbines	4872107	TONS/YR	ANNUAL MAXIMUM FROM THE FACILITYWIDE
LA-0331	CALCASIEU PASS LNG PROJECT	09/21/2018 ACT	Combined Cycle Combustion Turbines (CCCT1 to CCCT5)	921	MM BTU/h	Carbon Dioxide Equivalent (CO2e)	Combust low carbon fuel gas and good combustion practices	2602275	T/YR	ANNUAL TOTAL
LA-0331	CALCASIEU PASS LNG PROJECT	09/21/2018 ACT	Aeroderivative Simple Cycle Combustion Turbine	263	MM BTU/h	Carbon Dioxide Equivalent (CO2e)	Combust low carbon fuel gas, good combustion practices, good operation and maintenance practices at	134907	T/YR	ANNUAL TOTAL
LA-0331	CALCASIEU PASS LNG PROJECT	09/21/2018 ACT	Simple Cycle Combustion Turbines (SCCT1 to SCCT3)	927	MM BTU/h	Carbon Dioxide Equivalent (CO2e)	Exclusively combust low carbon fuel gas, good combustion practices, good operation and maintenance	1426146	T/YR	ANNUAL TOTAL
MA-0039	SALEM HARBOR STATION REDEVELOPMENT	01/30/2014 ACT	Combustion Turbine with Duct Burner	2449	MMBTU/H	Carbon Dioxide Equivalent (CO2e)		825	LB/MW-H	FULL LOAD WITHOUT DUCT FIRING
MD-0041	CPV ST. CHARLES	04/23/2014 ACT	2 COMBINED-CYCLE COMBUSTION TURBINES	725	MEGAWATT	Carbon Dioxide Equivalent (CO2e)		7109	BTU/KWH	@ ISO CONDITIONS
*MD-0042	WILDCAT POINT GENERATION FACILITY	04/08/2014 ACT	2 COMBINED CYCLE COMBUSTION TURBINES, WITH DUCT FIRING	1000	MW	Carbon Dioxide Equivalent (CO2e)	EXCLUSIVE USE OF PIPELINE-QUALITY NATURAL GAS, AND INSTALLATION OF HIGH-EFFICIENCY CT MOD	946	LB/MW-H (AS CO2)	12-MONTH ROLLING
MD-0045	MATTAWOMAN ENERGY CENTER	11/13/2015 ACT	2 COMBINED-CYCLE COMBUSTION TURBINES	286	MW	Carbon Dioxide Equivalent (CO2e)		865	LB/MW-H	12-MONTH ROLLING AVERAGE
MI-0402	SUMPTER POWER PLANT	11/17/2011 ACT	Combined cycle combustion turbine w/ HRSG	130	MW electrical output	Carbon Dioxide Equivalent (CO2e)		954	LB/MW-H	12-MONTH ROLLING AVERAGE
MI-0405	MIDLAND COGENERATION VENTURE	04/23/2013 ACT	Natural gas fueled combined cycle combustion turbine generators (CTG) with HRSG	2237	MMBTU/H	Carbon Dioxide Equivalent (CO2e)	Good combustion practices and energy efficiency.	995	LB/MW-H	12-MO. ROLLING AVERAGE
MI-0405	MIDLAND COGENERATION VENTURE	04/23/2013 ACT	Natural gas fueled combined cycle combustion turbine generators (CTG) with HRSG and du	2486	MMBTU/H	Carbon Dioxide Equivalent (CO2e)	Good combustion practices and energy efficiency	1071	LB/MW-H	12-MONTH ROLLING AVG.
MI-0406	RENAISSANCE POWER LLC	11/01/2013 ACT	FG-CTG1-4 Natural gas fueled combined cycle combustion turbine generators (CTG)	2147	MMBTU/H	Carbon Dioxide Equivalent (CO2e)	Good combustion practices/energy efficiency	1000	LB/MW-H	12-MONTH ROLLING AVERAGE
MI-0406	RENAISSANCE POWER LLC	11/01/2013 ACT	FG-CTG/DB1-4 Natural gas fueled combined cycle combustion turbine generators; duct bi	2807	MMBTU/H	Carbon Dioxide Equivalent (CO2e)	Good combustion practices/energy efficiency	1000	LB/MW-H	12-MONTH ROLLING AVERAGE
MI-0410	THETFORD GENERATING STATION	07/25/2013 ACT	FG-PEAKERS: 2 natural gas fired simple cycle combustion turbines	171	MMBTU/H	Carbon Dioxide Equivalent (CO2e)	Efficient combustion; energy efficiency	20141	T/YR	12-MO ROLLING TIME PERIOD
MI-0432	NEW COVERT GENERATING FACILITY	07/30/2018 ACT	FG-TURB/DB1-3 (3 combined cycle combustion turbine and heat recovery steam generato	1230	MW	Carbon Dioxide Equivalent (CO2e)	Several energy efficiency measures and the use of natural gas.	1425081	T/YR	EACH CT/HRSG TRAIN; 12-MO. ROLL TIME PER
MI-0433	MEC NORTH, LLC AND MEC SOUTH LLC	06/29/2018 ACT	EUCTGHRSG (South Plant): A combined cycle natural gas-fired combustion turbine genera	500	MW	Carbon Dioxide Equivalent (CO2e)	Energy efficiency measures and the use of a low carbon fuel (pipeline quality natural gas).	1978297	T/YR	12-MO ROLLING TIME PERIOD
MI-0433	MEC NORTH, LLC AND MEC SOUTH LLC	06/29/2018 ACT	EUCTGHRSG (North Plant): A combined-cycle natural gas-fired combustion turbine genera	500	MW	Carbon Dioxide Equivalent (CO2e)	Energy efficiency measures and the use of a low carbon fuel (pipeline quality natural gas).	1978297	T/YR	12-MO ROLL TIME PERIOD
*MI-0441	LBWL--ERICKSON STATION	12/21/2018 ACT	EUCTGHRSG1--A 667 MMBTU/H NG fired combustion turbine generator coupled with a hi	667	MMBTU/H	Carbon Dioxide Equivalent (CO2e)	Low carbon fuel (pipeline quality natural gas), good combustion practices and energy efficiency measure	430349	T/YR	12-MO ROLLING TIME PERIOD
NJ-0079	WOODBRIDGE ENERGY CENTER	07/25/2012 ACT	Combined Cycle Combustion Turbine with Duct Burner	40297.6	mmcubic ft/year	Carbon Dioxide Equivalent (CO2e)	Good combustion practices	925	LB/MW-H	BASED ON 12 MONTH PERIOD, ROLLING 1 MNTH
NJ-0080	HESS NEWARK ENERGY CENTER	11/01/2012 ACT	Combined cycle turbine with duct burner	39463	mmcubic ft/year*	Carbon Dioxide Equivalent (CO2e)	Good Combustion Practices	887	LB/MW-H	CONSCUTV 12 MONTH PERIOD ROLLING 1 MONTH
NJ-0082	WEST DEPTFORD ENERGY STATION	07/18/2014 ACT	Combined Cycle Combustion Turbine with Duct Burner	20282	MMCF/YR	Carbon Dioxide Equivalent (CO2e)	Turbine efficiency and Use of Natural gas a clean burning fuel	1237923	TONS/YEAR	CONSECUTIVE 12 MONTH (ROLLING 1 MONTH)
NJ-0085	MIDDLESEX ENERGY CENTER, LLC	07/19/2016 ACT	Combined Cycle Combustion Turbine firing Natural Gas with Duct Burner	4000	H/yr	Carbon Dioxide Equivalent (CO2e)	USE OS NATURAL GAS A CLEAN BURNING FUEL	888	LB/MW-H	BASED ON CONSECUTIVE 12 MONTH ROLLING
NJ-0085	MIDDLESEX ENERGY CENTER, LLC	07/19/2016 ACT	Combined Cycle Combustion Turbine firing Natural Gas without Duct Burner	8040	H/YR	Carbon Dioxide Equivalent (CO2e)	USE OF NATURAL GAS A CLEAN BURNING FUEL	888	LB/MW-H	BASED ON CONSECUTIVE 12 MONTH ROLLING
NJ-0085	MIDDLESEX ENERGY CENTER, LLC	07/19/2016 ACT	COMBINED CYCLE COMBUSTION TURBINE FIRING ULTRA LOW SULFUR DISTILLATE OIL	720	H/YR	Carbon Dioxide Equivalent (CO2e)	use of ULSD a low sulfur fuel	888	LB/MW-H	BASED ON CONSECUTIVE 12 MONTH ROLLING
OH-0352	OREGON CLEAN ENERGY CENTER	06/18/2013 ACT	2 Combined Cycle Combustion Turbines-Siemens, without duct burners	515600	MMSCF/rolling 12-months	Carbon Dioxide Equivalent (CO2e)	state-of-the-art high efficiency combustion technology	318404	LB/H	
OH-0352	OREGON CLEAN ENERGY CENTER	06/18/2013 ACT	2 Combined Cycle Combustion Turbines-Siemens, with duct burners	51560	MMSCF/rolling 12-MO	Carbon Dioxide Equivalent (CO2e)	state-of-the-art high efficiency combustion technology	318404	LB/H	
OH-0352	OREGON CLEAN ENERGY CENTER	06/18/2013 ACT	2 Combined Cycle Combustion Turbines-Mitsubishi, without duct burners	47917	MMSCF/rolling 12-MO	Carbon Dioxide Equivalent (CO2e)	state-of-the-art high efficiency combustion technology	318404	LB/H	
OH-0352	OREGON CLEAN ENERGY CENTER	06/18/2013 ACT	2 Combined Cycle Combustion Turbines-Mitsubishi, with duct burners	47917	MMSCF/rolling 12-MO	Carbon Dioxide Equivalent (CO2e)	state-of-the-art high efficiency combustion technology	318404	LB/H	
OH-0360	CARROLL COUNTY ENERGY	11/05/2013 ACT	Combined Cycle Combustion Turbines (two, identical) (P001 and P002)	2045	MMBTU/H	Carbon Dioxide Equivalent (CO2e)	state-of-the-art high efficiency combustion technology and natural gas fuel only	307279	LB/H	
OH-0363	NTE OHIO, LLC	11/05/2014 ACT	Turbine generator with HRSG and duct burners (P001)	3278.5	MMBTU/H	Carbon Dioxide Equivalent (CO2e)	Good combustion, oxidation catalysts, used of natural gas, energy efficiency.	880	LB/MW-H	SEE NOTES.
OH-0365	ROLLING HILLS GENERATING, LLC	05/20/2015 ACT	Combustion Turbines, Scenario 1 (4, identical) (P001, P002, P004, P005)	2022	MMBTU/H	Carbon Dioxide Equivalent (CO2e)	high efficiency	7471	BTU/KW-H	HHV NET PER EACH CCT BLOCK. SEE NOTES.
OH-0365	ROLLING HILLS GENERATING, LLC	05/20/2015 ACT	Combustion Turbines, Scenario 2 (4, identical) (P001, P002, P004, P005)	2144	MMBTU/H	Carbon Dioxide Equivalent (CO2e)	high efficiency	7471	BTU/KW-H	HHV NET PER EACH CCT BLOCK. SEE NOTES.
OH-0366	CLEAN ENERGY FUTURE - LORDSTOWN, LLC	08/25/2015 ACT	Combined Cycle Combustion Turbines (two, identical) (P001 and P002)	2725	MMBTU/H	Carbon Dioxide Equivalent (CO2e)	High efficient combustion technology	833	LB/MW-H	WITHOUT DUCT BURNERS. SEE NOTES.
OH-0367	SOUTH FIELD ENERGY LLC	09/23/2016 ACT	Combined Cycle Combustion Turbines (two, identical) (P001 and P002)	3131	MMBTU/H	Carbon Dioxide Equivalent (CO2e)	High efficient combustion technology	481301	LB/H	NAT GAS, WITH DUCT BURNER. SEE NOTES.
OH-0370	TRUMBULL ENERGY CENTER	09/07/2017 ACT	Combined Cycle Combustion Turbines (two, identical) (P001 and P002)	3025	MMBTU/H	Carbon Dioxide Equivalent (CO2e)	High efficient combustion technology	833	LB/MW-H	SEE NOTES.
OH-0372	OREGON ENERGY CENTER	09/27/2017 ACT	Combined Cycle Combustion Turbines (two, identical) (P001 and P002)	3055	MMBTU/H	Carbon Dioxide Equivalent (CO2e)	high efficiency combustion design	401921	LB/H	SEE NOTES.
OH-0374	GUERNSEY POWER STATION LLC	10/23/2017 ACT	Combined Cycle Combustion Turbines (3, identical) (P001 to P003)	3516	MMBTU/H	Carbon Dioxide Equivalent (CO2e)	high efficiency combustion practices as recommended by the manufacturer	846	LB/MW-H	WITHOUT DUCT BURNER. SEE NOTES.
OH-0375	LONG RIDGE ENERGY GENERATION LLC - HANNIBAL PO	11/07/2017 ACT	General Electric Combustion Turbine (P004)	3544	MMBTU/H	Carbon Dioxide Equivalent (CO2e)	high efficiency combustion practices as recommended by the manufacturer	775	LB/MW-H	SEE NOTES.
OH-0375	LONG RIDGE ENERGY GENERATION LLC - HANNIBAL PO	11/07/2017 ACT	Mitsubishi Combustion Turbine (P005)	3320	MMBTU/H	Carbon Dioxide Equivalent (CO2e)	high efficiency combustion practices as recommended by the manufacturer	1000	LB/MW-H	WITH DUCT BURNER. SEE NOTES.
OH-0375	LONG RIDGE ENERGY GENERATION LLC - HANNIBAL PO	11/07/2017 ACT	Siemens Combustion Turbine (P006)	3602	MMBTU/H	Carbon Dioxide Equivalent (CO2e)	high efficiency combustion practices as recommended by the manufacturer	1000	LB/MW-H	WITH DUCT BURNER. SEE NOTES.
OH-0377	HARRISON POWER	04/19/2018 ACT	General Electric (GE) Combustion Turbines (P005 & P006)	3459.6	MMBTU/H	Carbon Dioxide Equivalent (CO2e)	High efficient combustion technology	1000	LB/MW-H	WITH DUCT BURNER. SEE NOTES.
OH-0377	HARRISON POWER	04/19/2018 ACT	Mitsubishi Hitachi Power Systems (MHPS) Combustion Turbines (P007 & P008)	3231	MMBTU/H	Carbon Dioxide Equivalent (CO2e)	High efficient combustion technology	1000	LB/MW-H	WITH DUCT BURNER. SEE NOTES.
OK-0154	MOORELAND GENERATING STA	07/02/2013 ACT	Combustion Turbine	360	MW	Carbon Dioxide Equivalent (CO2e)	EFFICIENT DESIGN AND COMBUSTION.	1000	LB/MW-HR	ANNUAL
OK-0154	MOORELAND GENERATING STA	07/02/2013 ACT	COMBUSTION TURBINE	360	MW	Carbon Dioxide Equivalent (CO2e)	EFFICIENT DESIGN AND COMBUSTION.	1000	LB/MW-HR	ANNUAL
OR-0050	TROUTDALE ENERGY CENTER, LLC	03/05/2014 ACT	Mitsubishi M501-GAC combustion turbine, combined cycle configuration with duct burne	2988	MMBTU/H	Carbon Dioxide Equivalent (CO2e)	Thermal efficiency	1000	PER GROSS MWH	365-DAY ROLLING AVERAGE
OR-0050	TROUTDALE ENERGY CENTER, LLC	03/05/2014 ACT	GE LMS-100 combustion turbines, simple cycle with water injection	1690	MMBTU/H	Carbon Dioxide Equivalent (CO2e)	Thermal efficiency	1707	LB OF CO2 / GROSS MWH	365-DAY ROLLING AVERAGE
PA-0278	MOXIE LIBERTY LLC/ASYLUM POWER PL T	10/10/2012 ACT	Combined-cycle Turbines (2) - Natural gas fired	3277	MMBTU/H	Carbon Dioxide Equivalent (CO2e)	Good combustion practices.	1480086	T/YR	468 MW POWERBLOCK
PA-0288	SUNBURY GENERATION LP/SUNBURY SES	04/01/2013 ACT	Combined Cycle Combustion Turbine AND DUCT BURNER (3)	2538000	MMBTU/H	Carbon Dioxide Equivalent (CO2e)		281727	LB/H	WHEN DUCT BURNERS OPERATING
PA-0296	BERKS HOLLOW ENERGY ASSOC LLC/ONTELAUNEE	12/17/2013 ACT	Turbine, Combined Cycle, #1 and #2	3046	MMBTU/H	Carbon Dioxide Equivalent (CO2e)		1380899	T/YR	
PA-0306	TENASKA PA PARTNERS/WESTMORELAND GEN FAC	02/12/2016 ACT	Large combustion turbine	0		Carbon Dioxide Equivalent (CO2e)	Good combustion practices	1881905	TPY	
PA-0307	YORK ENERGY CENTER BLOCK 2 ELECTRICITY GENERAT	06/15/2015 ACT	Two Combine Cycle Combustion Turbine with Duct Burner	3001.57	MCF/hr	Carbon Dioxide Equivalent (CO2e)	Good combustion practices and oxidation catalyst	883	LB/MW-HR	EXPRESSED AS CO2E (NET)
PA-0309	LACKAWANNA ENERGY CTR/JESSUP	12/23/2015 ACT	Combustion turbine with duct burner	3304.3	MMBtu/hr	Carbon Dioxide Equivalent (CO2e)		1629115	TONS	YEAR
PA-0310	CPV FAIRVIEW ENERGY CENTER	09/02/2016 ACT	Combustion turbine and HRSG with duct burner NG only	3338	MMBtu/hr	Carbon Dioxide Equivalent (CO2e)	low sulfur fuel and good combustion practices	3352086	TONS	12-MONTH ROLLING BASIS
PA-0311	MOXIE FREEDOM GENERATION PLANT	09/01/2015 ACT	Combustion Turbine With Duct Burner	3727	MMBtu/hr	Carbon Dioxide Equivalent (CO2e)		1000	LB CO2/MWH	GROSS ON A 12-MONTH ROLLING BASIS
*PA-0315	HILLTOP ENERGY CENTER, LLC	04/12/2017 ACT	Combustion Turbine With Duct Burner	3505	MMBtu/hr	Carbon Dioxide Equivalent (CO2e)		879	LB	MWH (GROSS)
TN-0162	JOHNSONVILLE COGENERATION	04/19/2016 ACT	Natural Gas-Fired Combustion Turbine with HRSG	1339	MMBtu/hr	Carbon Dioxide Equivalent (CO2e)	Good combustion design and practices	1800	LB/MWH	12-MONTH MOVING AVERAGE
TX-0612	THOMAS C. FERGUSON POWER PLANT	11/10/2011 ACT	COMBINED CYCLE TURBINE GENERATOR U1-STK	1746	MMBTU/H	Carbon Dioxide Equivalent (CO2e)	Good Combustion Practices	908957.6	LB/H	30-DAY ROLLING AVERAGE
TX-0679	CORPUS CHRISTI LIQUEFACTION PLANT	02/27/2015 ACT	Refrigeration Compressor Turbines	40000	hp	Carbon Dioxide Equivalent (CO2e)	installeffi cient turbines, follow the turbine manufacturerâ€™s emission-related written instructions for	146754	TPY	ROLLING 12-MONTH BASIS
TX-0679	CORPUS CHRISTI LIQUEFACTION PLANT	02/27/2015 ACT	Refrigeration Compressor Turbine	40000	hp	Carbon Dioxide Equivalent (CO2e)	installeffi cient turbines, follow the turbine manufacturerâ€™s emission-related written instructions for	146754	TPY	12-MONTH ROLLING BASIS
TX-0739	AIR LIQUIDE, BAYOU COGENERATION PLANT	11/21/2013 ACT	Combustion Turbine with HRSG and Duct Burners	11988	Btu/kWhr (HHV, gross)	Carbon Dioxide Equivalent (CO2e)		7720	BTU/KWH (HHV, GROSS)	365-DAY ROLLING AVERAGE INCLUDES MSS
TX-0743	AUSTIN ENERGY, SAND HILL ENERGY CENTER	09/29/2014 ACT	Combustion Turbine with HRSG, Duct Burners, and SCR	7943	Btu/kWh (HHV, gross)	Carbon Dioxide Equivalent (CO2e)		930	LB CO2/MW H	365-DAY ROLLING AVERAGE
TX-0748	FGE POWER, FGE TEXAS PROJECT	04/28/2014 ACT	Combined Cycle Combustion Turbine with DB, HRSG and SCR	7625	Btu/kWh	Carbon Dioxide Equivalent (CO2e)		889	LB CO2/MW H, GROSS	APPLIES WITH OR WITHOUT DB; INCLUDES MSS
TX-0766	GOLDEN PASS LNG EXPORT TERMINAL	09/11/2015 ACT	Refrigeration Compression Turbines	15.6	MMtpy	Carbon Dioxide Equivalent (CO2e)	Equipment specifications & work practices -	614533	TPY	
TX-0773	FGE EAGLE PINES PROJECT	11/04/2015 ACT	Combined Cycle Turbines (>25 MW)	321	MW	Carbon Dioxide Equivalent (CO2e)	Low carbon fuel, good combustion, efficient combined cycle design	886	LB/MW H	WITHOUT DUCT FIRING
TX-0788	NECHES STATION	03/24/2016 ACT	Large Combustion Turbines > 25 MW	232	MW	Carbon Dioxide Equivalent (CO2e)	good combustion practiceS	1341	LB/MW H	
TX-0790	PORT ARTHUR LNG EXPORT TERMINAL	02/17/2016 ACT	Refrigeration Compression Turbines	10	MTONNES/YR	Carbon Dioxide Equivalent (CO2e)	Equipment specifications & work practices -	504517	T/YR	
TX-0790	PORT ARTHUR LNG EXPORT TERMINAL	02/17/2016 ACT	Simple Cycle Electrical Generation Gas Turbines 15.210	34	MW	Carbon Dioxide Equivalent (CO2e)	Good combustion practices and use of low carbon, low sulfur fuel	156912	T/YR	
TX-0819	GAINES COUNTY POWER PLANT	04/28/2017 ACT	Simple Cycle Turbine	227.5	MW	Carbon Dioxide Equivalent (CO2e)	Pipeline quality natural gas; limited hours; good combustion practices	1300	LB/MW H	
TX-0819	GAINES COUNTY POWER PLANT	04/28/2017 ACT	Combined Cycle Turbine with Heat Recovery Steam Generator, fired Duct Burners, and Sk	426	MW	Carbon Dioxide Equivalent (CO2e)	Pipeline quality natural gas	960	LB / MW H	
TX-0834	MONTGOMERY COUNTY POWER STATIOIN	03/30/2018 ACT	Combined Cycle Turbine	2635	MMBTU/HR/UNIT	Carbon Dioxide Equivalent (CO2e)	PIPELINE QUALITY NATURAL GAS, GOOD COMBUSTION PRACTICES	884	LB/MWH	
TX-0834	MONTGOMERY COUNTY POWER STATIOIN	03/30/2018 ACT	COMBINED CYCLE TURBINE MSS REDUCED LOAD	0		Carbon Dioxide Equivalent (CO2e)	minimizing duration of startup / shutdown events, engaging the pollution control equipment as soon as	223	TON/H	
VA-0319	GATEWAY COGENERATION 1, LLC - SMART WATER PRO	08/27/2012 ACT	COMBUSTION TURBINES, (2)	593	MMBTU/H	Carbon Dioxide Equivalent (CO2e)	Controlled by the use of low carbon fuels and high efficiency design. The heat rate shall be no greater th	295961	T/YR	12 MO ROLLING AVG
VA-0321	BRUNSWICK COUNTY POWER STATION	03/12/2013 ACT	COMBUSTION TURBINE GENERATORS, (3)	3442	MMBTU/H	Carbon Dioxide Equivalent (CO2e)	Energy efficient combustion practices and low GHG fuels.	7500	BTU/KW-H	
VA-0325	GREENSVILLE POWER STATION	06/17/2016 ACT	COMBUSTION TURBINE GENERATOR WITH DUCT-FIRED HEAT RECOVERY STEAM GENERAT	3227	MMBTU/HR	Carbon Dioxide Equivalent (CO2e)		890	LB/MWH	NET OUTPUT AFTER 30 YEARS OF OPERATION
VA-0328	C4GT, LLC	04/26/2018 ACT	GE Combustion Turbine - Option 1 - Normal Operation	34000	MMCF/YR	Carbon Dioxide Equivalent (CO2e)	Energy efficient combustion practices and low GHG fuels	883	LB CO2E/MW-H	12 MO ROLLING TOTAL
VA-0328	C4GT, LLC	04/26/2018 ACT	Siemens Combusion Turbine - Option 2 - Normal Operation	35000	MMCF/YR	Carbon Dioxide Equivalent (CO2e)	Energy efficient combustion practices and low GHG fuels	883	LB CO2E/MW H	12 MO ROLLING TOTAL
WV-0025	MOUNDSVILLE COMBINED CYCLE POWER PLANT	11/21/2014 ACT	Combined Cycle Turbine/Duct Burner	2419.61	mmBtu/Hr	Carbon Dioxide Equivalent (CO2e)	Low Carbon Fuel	272556	LB/H	
*WV-0029	HARRISON COUNTY POWER PLANT	03/27/2018 ACT	GE 7HA.02 Turbine	3496.2	mmBtu/hr	Carbon Dioxide Equivalent (CO2e)	Use of Natural Gas, Model GE7HA	528543	LB/HR	
*WV-0032	BROOKE COUNTY POWER PLANT	09/18/2018 ACT	GE 7HA.01 Turbine	2737.7	mmBtu/hr	Carbon Dioxide Equivalent (CO2e)	Use of Natural Gas, Model GE7HA	417382	LB/HR	

2. LARGE INTERNAL COMBUSTION ENGINES > 500 HP (RLBC CODE 17.130)

RBLC SUMMARY FOR ENGINES - NO_x										
RBLCID	FACILITY_NAME	PERMIT_ISSUANCE_DATE	PROCESS_NAME	THROUGHPUT	THROUGHPUT_UNIT	POLLUTANT	CONTROL_METHOD_DESCRIPTION	EMISSION_LIMIT_1	EMISSION_LIMIT_1_UNIT	EMISSION_LIMIT_1_AVG_TIME_CONDITION
AK-0066	ENDICOTT PRODUCTION FACILITY, LIBERTY DEVELOPMENT PR	06/15/2009 ACT	EU IDS 49 - 56, DRILLING MAIN ENGINES	2889	BHP	Nitrogen Oxides (NOx)	TURBOCHARGERS AND AFTERCOOLERS (GOOD COMBUSTION PRACTICES)	1	G/HP-H	
AK-0066	ENDICOTT PRODUCTION FACILITY, LIBERTY DEVELOPMENT PR	06/15/2009 ACT	EU ID 58, CAMP ENGINE 3	1041	HP	Nitrogen Oxides (NOx)	GOOD COMBUSTION PRACTICES	4.7	G/HP-H	
CA-1192	AVENAL ENERGY PROJECT	06/21/2011 ACT	EMERGENCY IC ENGINE	550	KW	Nitrogen Oxides (NOx)	SCR, OPERATIONAL LIMIT OF 50 HRS/YR	0.21	G/HP-H	
CA-1192	AVENAL ENERGY PROJECT	06/21/2011 ACT	EMERGENCY FIREWATER PUMP ENGINE	288	HP	Nitrogen Oxides (NOx)	EQUIPPED W/ A TURBOCHARGER AND AN INTERCOOLER/AFTERCOOLER	3.4	G/HP-H	
CA-1240	GOLD COAST PACKING	03/17/2017 ACT	Internal Combustion Engine	881	bhp	Nitrogen Oxides (NOx)	SCR catalyst-Urea injection	5	PPMVD	@15%O2
*FL-0368	NUCOR STEEL FLORIDA FACILITY	02/14/2019 ACT	Emergency Engines	0		Nitrogen Oxides (NOx)	Good combustion practices	2	G/HP-HR	
KS-0035	LACEY RANDALL GENERATION FACILITY, LLC	01/24/2014 ACT	spark ignition four stroke lean burn reciprocating internal combustion engine (R	12526	BHP	Nitrogen Oxides (NOx)	Selective Catalytic Reduction (SCR) system and oxidation catalyst	1.45	LBS PER HOUR	1-HR AVERAGING PERIOD, EXCLUDING STARTUP
LA-0257	SABINE PASS LNG TERMINAL	12/06/2011 ACT	Generator Engines (2)	2012	hp	Nitrogen Oxides (NOx)	Comply with 40 CFR 60 Subpart JJJJ	9.76	LB/H	HOURLY MAXIMUM
LA-0287	ALEXANDRIA COMPRESSOR STATION	07/21/2014 ACT	Solar Titan 130 Centrifugal Compressor Turbine Engine #907 (E08, EQT 13)	20405	HP	Nitrogen Oxides (NOx)	Dry low NOx combustion; good combustion practices; annual compliance testing	9.23	LB/HR	HOURLY MAXIMUM
LA-0287	ALEXANDRIA COMPRESSOR STATION	07/21/2014 ACT	Solar Mars 90 Centrifugal Compressor Turbine Engine #908 (E09, EQT 14)	13699	HP	Nitrogen Oxides (NOx)	Dry low NOx combustion; good combustion practices; annual compliance testing	6.64	LB/HR	HOURLY MAXIMUM
LA-0287	ALEXANDRIA COMPRESSOR STATION	07/21/2014 ACT	Emergency Generator Reciprocating Engine (G30, EQT 15)	1175	HP	Nitrogen Oxides (NOx)	Good combustion practices; use of natural gas as fuel; limit non-emergency use to <= 100 ho	5.18	LB/HR	HOURLY MAXIMUM
LA-0292	HOLBROOK COMPRESSOR STATION	01/22/2016 ACT	Waukesha 16V-275GL Compressor Engines Nos. 1-12	5000	HP	Nitrogen Oxides (NOx)	Lean-burn combustion, use of natural gas as fuel, good equipment design, and proper comb	4.96	LB/HR	HOURLY MAXIMUM
MI-0393	RAY COMPRESSOR STATION	10/14/2010 ACT	Five spark ignition internal combustion engines	32	MMBTU/H	Nitrogen Oxides (NOx)	low emission design and good combustion practices	0.5	G/B-H-P-H	ACCORDING TO TEST METHOD
MI-0412	HOLLAND BOARD OF PUBLIC WORKS - EAST 5TH STREET	12/04/2013 ACT	Emergency Engine--natural gas (EUNGENGINE)	1000	kW	Nitrogen Oxides (NOx)	Good combustion practices	2	G/H-P-H	TEST PROTOCOL
MI-0412	HOLLAND BOARD OF PUBLIC WORKS - EAST 5TH STREET	12/04/2013 ACT	Emergency Engine --Diesel Fire Pump (EUFPENGINE)	165	HP	Nitrogen Oxides (NOx)	Good combustion practices	3	G/H-P-H	TEST PROTOCOL
MI-0424	HOLLAND BOARD OF PUBLIC WORKS - EAST 5TH STREET	12/05/2016 ACT	EUNGENGINE (Emergency engine--natural gas)	500	H/YR	Nitrogen Oxides (NOx)	Good combustion practices.	2	G/H-P-H	TEST PROTOCOL WILL SPECIFY AVG TIME
MI-0424	HOLLAND BOARD OF PUBLIC WORKS - EAST 5TH STREET	12/05/2016 ACT	EUFPENGINE (Emergency engine--diesel fire pump)	500	H/YR	Nitrogen Oxides (NOx)	Good combustion practices.	3	G/H-P-H	TEST PROTOCOL WILL SPECIFY AVG TIME
MI-0426	DTE GAS COMPANY - MILFORD COMPRESSOR STATION	03/24/2017 ACT	EUN_EM_GEN (Natural gas emergency engine).	205	H/YR	Nitrogen Oxides (NOx)	Low NOx design (turbo charger and after cooler) and good combustion practices.	4	LB/H	
*MI-0440	MICHIGAN STATE UNIVERSITY	05/22/2019 ACT	FGENGINES	16500	HP	Nitrogen Oxides (NOx)	Selective catalytic reduction	0.5	G/H-P-H	HOURLY EXCEPT DURING STARTUP/SHUTDOWN
*MI-0441	LBWL--ERICKSON STATION	12/21/2018 ACT	EUEMGNG1--A 1500 HP natural gas fueled emergency engine	1500	HP	Nitrogen Oxides (NOx)	Burn natural gas and be NSPS compliant.	2	G/HP-H	HOURLY
*MI-0441	LBWL--ERICKSON STATION	12/21/2018 ACT	EUEMGD1--A 1500 HP diesel fueled emergency engine	1500	HP	Nitrogen Oxides (NOx)	Good combustion practices and will be NSPS compliant.	6.4	G/KW-H	HOURLY
*MI-0441	LBWL--ERICKSON STATION	12/21/2018 ACT	EUEMGD2--A 6000 HP diesel fuel fired emergency engine	6000	HP	Nitrogen Oxides (NOx)	Good combustion practices and will be NSPS compliant.	6.4	G/KW-H	HOURLY
OK-0148	BUFFALO CREEK PROCESSING PLANT	09/12/2012 ACT	Large Internal Combustion Engines (>500 hp)	1775	Horsepower	Nitrogen Oxides (NOx)	Ultra Lean Burn	0.5	GM/HP-HR	1-HR
OK-0148	BUFFALO CREEK PROCESSING PLANT	09/12/2012 ACT	Large Internal Combustion Engines (>500 hp)	2370	Horsepower	Nitrogen Oxides (NOx)	Ultra Lean Burn	0.5	GM/HP-HR	1-HR
OK-0153	ROSE VALLEY PLANT	03/01/2013 ACT	COMPRESSOR ENGINE 1,775-HP CAT G3606LE	1775	HP	Nitrogen Oxides (NOx)		0.5	GM/HP-HR	3-HR AVG
PA-0286	MOXIE ENERGY LLC/PATRIOT GENERATION PLT	01/31/2013 ACT	Fire Pump Engine - 460 BHP	0		Nitrogen Oxides (NOx)		2.6	G/H-P-H	EXPRESSED AS NO2
PA-0286	MOXIE ENERGY LLC/PATRIOT GENERATION PLT	01/31/2013 ACT	EMERGENCY GENERATOR-ENGINE	0		Nitrogen Oxides (NOx)		4.93	GM/B-HP-H	
PA-0287	WELLING COMPRESSOR STATION	09/27/2011 ACT	CATERPILLAR G3516B COMPRESSOR ENGINES (2)	0		Nitrogen Oxides (NOx)		0.5	G/B-H-P-H	EACH ENGINE
PA-0287	WELLING COMPRESSOR STATION	09/27/2011 ACT	WAUKESHA P9390GSI COMPRESSOR ENGINES (4) (1980 BHP)	0		Nitrogen Oxides (NOx)	3-way catalyst, Johnson Matthey	0.2	G/B-HP-H	EACH ENGINE
PA-0287	WELLING COMPRESSOR STATION	09/27/2011 ACT	JOHN DEERE DIESEL ENGINE (197 BHP)	0		Nitrogen Oxides (NOx)		2.86	G/B-HP-H	INCLUDES NMHC
PA-0301	CARPENTER COMPRESSOR STATION	03/31/2014 ACT	Three Four Stroke Lean Burn Engine - Caterpillar G3608 TA, 2370 BHP	0		Nitrogen Oxides (NOx)		0.5	G/BHP-HR	
PA-0301	CARPENTER COMPRESSOR STATION	03/31/2014 ACT	One four stroke lean burn engine, Caterpillar Model G3612 TA, 3550 bhp	0		Nitrogen Oxides (NOx)		0.5	G/BHP-HR	
PA-0302	CLERMONT COMPRESSOR STATION	04/16/2014 ACT	Spark Ignited 4 stroke Rich Burn Engine (7 units)	0		Nitrogen Oxides (NOx)	NSCR	0.2	G/BHP-HR	
TX-0642	SINTON COMPRESSOR STATION	12/20/2013 ACT	Emergency Engine	1328	hp	Nitrogen Oxides (NOx)		2	G/H-P-H	
TX-0680	SONORA GAS PLANT	06/14/2013 ACT	Refrigeration compressor engine	1183	hp	Nitrogen Oxides (NOx)	ultra-lean burn technology	0.5	G/H-P-HR	1 HOUR
TX-0680	SONORA GAS PLANT	06/14/2013 ACT	Recompression compressor engine	1380	hp	Nitrogen Oxides (NOx)	ultra-lean burn technology	0.5	G/H-P-HR	1 HOUR
TX-0692	RED GATE POWER PLANT	12/20/2013 ACT	(12) reciprocating internal combustion engines	18	MW	Nitrogen Oxides (NOx)	Selective Catalytic Reduction (SCR)	0.084	G/H-P-HR	1 HOUR
TX-0755	RAMSEY GAS PLANT	05/21/2015 ACT	Internal Combustion Compressor Engines	206149	MMBtu/yr	Nitrogen Oxides (NOx)	Ultra Lean-burn engines firing natural gas	0.5	G/H-P HR	
AL-0301	NUCOR STEEL TUSCALOOSA, INC.	07/22/2014 ACT	DIESEL FIRED EMERGENCY GENERATOR	800	HP	Nitrogen Oxides (NOx)		0.015	LB/HP-H	
AL-0301	NUCOR STEEL TUSCALOOSA, INC.	07/22/2014 ACT	PROPANE FIRED EMERGENCY GENERATOR	400	KW	Nitrogen Oxides (NOx)		13	LB/1000 GAL	
IN-0167	MAGNETATION LLC	04/16/2013 ACT	EMERGENCY GENERATOR	620	HP	Nitrogen Oxides (NOx)	USE OF NATURAL GAS AND GOOD COMBUSTION PRACTICES	0.5	G/H-P-H	3 HOURS
*KS-0030	MID-KANSAS ELECTRIC COMPANY, LLC - RUBART STATION	03/31/2016 ACT	Spark ignition RICE emergency AC generators	450	kW	Nitrogen Oxides (NOx)		2	G/H-P-HR	EXCLUDES STARTUP, SHUTDOWN & MALFUNCTION
LA-0292	HOLBROOK COMPRESSOR STATION	01/22/2016 ACT	Emergency Generators No. 1 & No. 2	1341	HP	Nitrogen Oxides (NOx)	Good equipment design, proper combustion techniques, use of low sulfur fuel, and compliar	14.16	LB/HR	HOURLY MAXIMUM
MI-0393	RAY COMPRESSOR STATION	10/14/2010 ACT	Emergency generator	500	H/YR	Nitrogen Oxides (NOx)		0.5	G/B-H-P-H	TEST METHOD
MI-0401	MIDLAND POWER STATION	12/21/2011 ACT	Emergency generator	1200	kW output	Nitrogen Oxides (NOx)		0.5	G/H-P-H	CONTINUOUS
*MI-0441	LBWL--ERICKSON STATION	12/21/2018 ACT	EUCTGHRSG 1--A 667 MMBTU/H NG fired combustion turbine generator couple	667	MMBTU/H	Nitrogen Oxides (NOx)	Dry low NOx burners and selective catalytic reduction for NOx control.	3	PPM	PPMVD@15%O2; 24-H ROLL AVG; SEE NOTES
OK-0153	ROSE VALLEY PLANT	03/01/2013 ACT	EMERGENCY GENERATORS 2,889-HP CAT G3520C IM	2889	HP	Nitrogen Oxides (NOx)	LEAN-BURN COMBUSTION.	0.5	GM/HP-HR	3-HR
PA-0286	MOXIE ENERGY LLC/PATRIOT GENERATION PLT	01/31/2013 ACT	EMERGENCY GENERATOR-ENGINE	0		Nitrogen Oxides (NOx)		4.93	GM/B-HP-H	
PA-0297	KELLY IMG ENERGY LLC/KELLY IMG PLT	05/23/2013 ACT	3.11 MW GENERATORS (WAUKESHA) #1 and #2	0		Nitrogen Oxides (NOx)		0.5	G/BHP-HR	PER ENGINE
*PA-0303	NATL FUEL GAS SUPPLY/ELLISBURG STA	02/02/2012 ACT	Emergency Generator Set, Rich Burn, 850 BHP	0		Nitrogen Oxides (NOx)	Miratech model IQ-24-10-EC1 NSCR system	0.5	G/BHP-HR	
WY-0066	MEDICINE BOW IGL PLANT	03/04/2009 ACT	BLACK START GENERATOR 1	2889	HP	Nitrogen Oxides (NOx)	LIMITED OPERATING HOURS (250 HR/YR)	1	G/H-P-H	HOURLY
WY-0066	MEDICINE BOW IGL PLANT	03/04/2009 ACT	BLACK START GENERATOR 2	2889	HP	Nitrogen Oxides (NOx)	LIMITED OPERATING HOURS (250 HR/YR)	1	G/H-P-H	HOURLY
WY-0066	MEDICINE BOW IGL PLANT	03/04/2009 ACT	BLACK START GENERATOR 3	2889	HP	Nitrogen Oxides (NOx)	LIMITED OPERATING HOURS (250 HR/YR)	1	G/H-P-H	HOURLY

RBLC SUMMARY FOR ENGINES - CO										
RBLCID	FACILITY_NAME	PERMIT_ISSUANCE_DATE	PROCESS_NAME	THROUGHPUT	THROUGHPUT_UNIT	POLLUTANT	CONTROL_METHOD_DESCRIPTION	EMISSION_LIMIT_1	EMISSION_LIMIT_1_UNIT	EMISSION_LIMIT_1_AVG_TIME_CONDITION
AK-0066	ENDICOTT PRODUCTION FACILITY, LIBERTY DEVELOPMENT PR	06/15/2009 ACT	EU IDS 49 - 56, DRILLING MAIN ENGINES	2889	BHP	Carbon Monoxide	CATALYTIC OXIDATION	0.47	G/HP-H	
AK-0066	ENDICOTT PRODUCTION FACILITY, LIBERTY DEVELOPMENT PR	06/15/2009 ACT	EU ID 58, CAMP ENGINE 3	1041	HP	Carbon Monoxide	GOOD COMBUSTION PRACTICES	2.6	G/HP-H	
CA-1192	AVENAL ENERGY PROJECT	06/21/2011 ACT	EMERGENCY IC ENGINE	550	KW	Carbon Monoxide	EXHAUST VENTED TO A OXIDATION CATALYST SYSTEM, OPERATIONAL LIMIT OF 50 HRS/YR	1	G/HP-H	
CA-1192	AVENAL ENERGY PROJECT	06/21/2011 ACT	EMERGENCY FIREWATER PUMP ENGINE	288	HP	Carbon Monoxide	EQUIPPED W/ A TURBOCHARGER AND AN INTERCOOLER/AFTERCOOLER	0.447	G/HP-H	
CA-1240	GOLD COAST PACKING	03/17/2017 ACT	Internal Combustion Engine	881	bhp	Carbon Monoxide	Oxidation catalyst	54	PPMVD	@15%O2
*FL-0368	NUCOR STEEL FLORIDA FACILITY	02/14/2019 ACT	Emergency Engines	0		Carbon Monoxide	good combustion practices	4	G-HP-HR	
KS-0035	LACEY RANDALL GENERATION FACILITY, LLC	01/24/2014 ACT	spark ignition four stroke lean burn reciprocating internal combustion engine (RICE	12526	BHP	Carbon Monoxide	selective catalytic reduction (SCR) system and an oxidation catalyst	2.67	LBS PER HOUR	1-HR AVERAGING, EXCLUDING STARTUP
LA-0257	SABINE PASS LNG TERMINAL	12/06/2011 ACT	Generator Engines (2)	2012	hp	Carbon Monoxide	Comply with 40 CFR 60 Subpart JJJJ	19.51	LB/H	HOURLY MAXIMUM
MI-0412	HOLLAND BOARD OF PUBLIC WORKS - EAST 5TH STREET	12/04/2013 ACT	Emergency Engine--natural gas (EUNGENGINE)	1000	kW	Carbon Monoxide	Oxidation catalyst and good combustion practices.	0.8	G/HP-H	TEST PROTOCOL
MI-0412	HOLLAND BOARD OF PUBLIC WORKS - EAST 5TH STREET	12/04/2013 ACT	Emergency Engine--Diesel Fire Pump (EUFPENGINE)	165	HP	Carbon Monoxide	Good combustion practices	3.7	G/HP-H	TEST PROTOCOL
MI-0413	AK STEEL	05/12/2014 ACT	FG-ENG2007>500 â€" Two natural gas fired SI engines greater than 500 hp	0		Carbon Monoxide		0		
MI-0413	AK STEEL	05/12/2014 ACT	FG-ENG2007<500 â€" Four natural gas fired SI engines less than 500 hp	0		Carbon Monoxide		0		
MI-0424	HOLLAND BOARD OF PUBLIC WORKS - EAST 5TH STREET	12/05/2016 ACT	EUNGENGINE (Emergency engine--natural gas)	500	H/YR	Carbon Monoxide	Oxidation catalyst and good combustion practices.	0.8	G/HP-H	TEST PROTOCOL WILL SPECIFY AVG TIME
MI-0424	HOLLAND BOARD OF PUBLIC WORKS - EAST 5TH STREET	12/05/2016 ACT	EUFPENGINE (Emergency engine--diesel fire pump)	500	H/YR	Carbon Monoxide	Good combustion practices.	3.7	G/HP-H	TEST PROTOCOL WILL SPECIFY AVG TIME
MI-0426	DTE GAS COMPANY - MILFORD COMPRESSOR STATION	03/24/2017 ACT	EUN_EM_GEN (Natural gas emergency engine).	205	H/YR	Carbon Monoxide	Good combustion practices and clean burn fuel (pipeline quality natural gas).	11	LB/H	
*MI-0440	MICHIGAN STATE UNIVERSITY	05/22/2019 ACT	FGENGINES	16500	HP	Carbon Monoxide	Oxidation catalyst	0.3	G/HP-H	HOURLY EXCEPT DURING STARTUP/SHUTDOWN
*MI-0441	LBWL--ERICKSON STATION	12/21/2018 ACT	EUEMGNG1--A 1500 HP natural gas fueled emergency engine	1500	HP	Carbon Monoxide	Burn natural gas and be NSPS compliant	4	G/HP-H	HOURLY
*MI-0441	LBWL--ERICKSON STATION	12/21/2018 ACT	EUEMGD1--A 1500 HP diesel fueled emergency engine	1500	HP	Carbon Monoxide	Good combustion practices and will be NSPS compliant.	3.5	G/KW-H	HOURLY
*MI-0441	LBWL--ERICKSON STATION	12/21/2018 ACT	EUEMGD2--A 6000 HP diesel fuel fired emergency engine	6000	HP	Carbon Monoxide	Good combustion practices and will be NSPS compliant.	3.5	G/KW-H	HOURLY
*MI-0441	LBWL--ERICKSON STATION	12/21/2018 ACT	EUFPRICE--A 315 HP diesel fueled emergency engine	2.5	MMBTU/H	Carbon Monoxide	Good combustion practices.	2.6	G/HP-H	HOURLY
OK-0148	BUFFALO CREEK PROCESSING PLANT	09/12/2012 ACT	Large Internal Combustion Engines (>500 hp)	1775	Horsepower	Carbon Monoxide	Oxidation Catalyst	0.55	GM/HP-HR	1-HR
OK-0148	BUFFALO CREEK PROCESSING PLANT	09/12/2012 ACT	Large Internal Combustion Engines (>500 hp)	2370	Horsepower	Carbon Monoxide	Oxidation Catalyst	0.55	GM/HP-HR	1-HR
OK-0153	ROSE VALLEY PLANT	03/01/2013 ACT	COMPRESSOR ENGINE 1, 775-HP CAT G3606LE	1775	HP	Carbon Monoxide	EACH ENGINE EQUIPPED W/OXIDATION CATALYST.	0.36	GM/HP-HR	3-HR AVG
PA-0286	MOXIE ENERGY LLC/PATRIOT GENERATION PLT	01/31/2013 ACT	Fire Pump Engine - 460 BHP	0		Carbon Monoxide		0.5	G/HP-H	
PA-0286	MOXIE ENERGY LLC/PATRIOT GENERATION PLT	01/31/2013 ACT	EMERGENCY GENERATOR-ENGINE	0		Carbon Monoxide		0.13	GM/B-HP-H	
PA-0287	WELLING COMPRESSOR STATION	09/27/2011 ACT	CATERPILLAR G3516B COMPRESSOR ENGINES (2)	0		Carbon Monoxide	Oxidation Catalyst - Miratech	0.12	G/B-HP-H	EACH ENGINE
PA-0287	WELLING COMPRESSOR STATION	09/27/2011 ACT	WAUKESHA P9390GSI COMPRESSOR ENGINES (4) (1980 BHP)	0		Carbon Monoxide	3-way catalyst, Johnson Matthey	0.26	G/B-HP-H	EACH ENGINE
PA-0287	WELLING COMPRESSOR STATION	09/27/2011 ACT	JOHN DEERE DIESEL ENGINE (197 BHP)	0		Carbon Monoxide		0.097	G/B-HP-H	
PA-0301	CARPENTER COMPRESSOR STATION	03/31/2014 ACT	Three Four Stroke Lean Burn Engine - Caterpillar G3608 TA, 2370 BHP	0		Carbon Monoxide	Oxidation Catalyst	47	PPMVD	@15% O2 OR 93% REDUCTION
PA-0301	CARPENTER COMPRESSOR STATION	03/31/2014 ACT	One four stroke lean burn engine, Caterpillar Model G3612 TA, 3550 bhp	0		Carbon Monoxide	Oxidation catalyst	47	PPMVD	AT 15% O2 OR 93% REDUCTION
PA-0302	CLERMONT COMPRESSOR STATION	04/16/2014 ACT	Spark Ignited 4 stroke Rich Burn Engine (7 units)	0		Carbon Monoxide	NSCR	0.3	G/BHP-HR	
TX-0642	SINTON COMPRESSOR STATION	12/20/2013 ACT	Emergency Engine	1328	hp	Carbon Monoxide		1.3	G/HP-H	
TX-0680	SONORA GAS PLANT	06/14/2013 ACT	Refrigeration compressor engine	1183	hp	Carbon Monoxide	oxidation catalyst	0.252	G/HP-HR	1 HOUR
TX-0680	SONORA GAS PLANT	06/14/2013 ACT	Recompression compressor engine	1380	hp	Carbon Monoxide	oxidation catalyst	0.252	G/HP-HR	1 HOUR
TX-0692	RED GATE POWER PLANT	12/20/2013 ACT	(12) reciprocating internal combustion engines	18	MW	Carbon Monoxide	oxidation catalyst	0.3	G/HP-HR	1 HOUR
TX-0755	RAMSEY GAS PLANT	05/21/2015 ACT	Internal Combustion Compressor Engines	206149	MMBtu/yr	Carbon Monoxide	Ultra lean-burn engines firing residue gas (with low carbon density) which is equivalent to natural gas, and use o	0.083	G/HP HR	
AL-0301	NUCOR STEEL TUSCALOOSA, INC.	07/22/2014 ACT	DIESEL FIRED EMERGENCY GENERATOR	800	HP	Carbon Monoxide		0.0055	LB/HP-H	
AL-0301	NUCOR STEEL TUSCALOOSA, INC.	07/22/2014 ACT	PROPANE FIRED EMERGENCY GENERATOR	400	KW	Carbon Monoxide		7.5	LB/1000 GAL	
*KS-0030	MID-KANSAS ELECTRIC COMPANY, LLC - RUBART STATION	03/31/2016 ACT	Spark ignition RICE emergency AC generators	450	kW	Carbon Monoxide		4	G/HP-HR	EXCLUDES STARTUP, SHUTDOWN & MALFUNCTION
LA-0311	DONALDSONVILLE NITROGEN COMPLEX	07/15/2013 ACT	No. 6 Ammonia Plant Emergency Generator (16-13) and No. 5 Urea Plant Emergency	300	HP	Carbon Monoxide	Good combustion practices; proper equipment design consistent with 40 CFR 60 Subpart JJJJ	3.31	LB/HR	HOURLY MAXIMUM
LA-0311	DONALDSONVILLE NITROGEN COMPLEX	07/15/2013 ACT	No. 5 Urea Plant Emergency Generator B (33-13, EQT 182)	2500	HP	Carbon Monoxide	Good combustion practices; proper equipment design consistent with 40 CFR 60 Subpart JJJJ	27.56	LB/HR	HOURLY MAXIMUM
*MI-0441	LBWL--ERICKSON STATION	12/21/2018 ACT	EUCTGHRSG1--A 667 MMBTU/H NG fired combustion turbine generator coupled w	667	MMBTU/H	Carbon Monoxide	An oxidation catalyst for CO control for each CTG/HRSG unit; good combustion practices.	4	PPM	PPMVD@15%O2;24-H ROLL AVG; SEE NOTES
OK-0153	ROSE VALLEY PLANT	03/01/2013 ACT	EMERGENCY GENERATORS 2,889-HP CAT G3520C IM	2889	HP	Carbon Monoxide	OXIDATION CATALYST	0.43	GM/HP-HR	3-HR
PA-0286	MOXIE ENERGY LLC/PATRIOT GENERATION PLT	01/31/2013 ACT	EMERGENCY GENERATOR-ENGINE	0		Carbon Monoxide		0.13	GM/B-HP-H	
PA-0297	KELLY IMG ENERGY LLC/KELLY IMG PLT	05/23/2013 ACT	3.11 MW GENERATORS (WAUKESHA) #1 and #2	0		Carbon Monoxide	CO Catalyst	0.08	G/BHP-HR	PER ENGINE
SC-0170	BP AMOCO CHEMICAL COMPANY - COOPER RIVER PLANT	11/07/2014 ACT	#1 OXIDATION UNIT NEW EMERGENCY GENERATORS	0		Carbon Monoxide	100 HOURS PER YEAR NON-EMERGENCY USE, TIER 3 EMISSION STANDARDS, AND USE OF ONLY ULTRA LOW SUL	0		
WY-0066	MEDICINE BOW IGL PLANT	03/04/2009 ACT	BLACK START GENERATOR 1	2889	HP	Carbon Monoxide	LIMITED OPERATING HOURS (250 HR/YR)	2.4	G/HP-H	HOURLY
WY-0066	MEDICINE BOW IGL PLANT	03/04/2009 ACT	BLACK START GENERATOR 2	2889	HP	Carbon Monoxide	LIMITED OPERATING HOURS (250 HR/YR)	2.4	G/HP-H	HOURLY
WY-0066	MEDICINE BOW IGL PLANT	03/04/2009 ACT	BLACK START GENERATOR 3	2889	HP	Carbon Monoxide	LIMITED OPERATING HOURS (250 HR/YR)	2.4	G/HP-H	HOURLY

RBLC SUMMARY FOR ENGINES - VOC										
RBLCID	FACILITY_NAME	PERMIT_ISSUANCE_DATE	PROCESS_NAME	THROUGHPUT	THROUGHPUT_UNIT	POLLUTANT	CONTROL_METHOD_DESCRIPTION	EMISSION_LIMIT_1	EMISSION_LIMIT_1_UNIT	EMISSION_LIMIT_1_AVG_TIME_CONDITION
CA-1240	GOLD COAST PACKING	03/17/2017 ACT	Internal Combustion Engine	881	bhp	Volatile Organic Compounds (VOC)	Oxidation catalyst	25	PPMVD	@15%O2
*FL-0368	NUCOR STEEL FLORIDA FACILITY	02/14/2019 ACT	Emergency Engines	0		Volatile Organic Compounds (VOC)	Good combustion practices	1	G/HP-HR	
KS-0035	LACEY RANDALL GENERATION FACILITY, LLC	01/24/2014 ACT	spark ignition four stroke lean burn reciprocating internal combustion engine (RICE)	12526	BHP	Volatile Organic Compounds (VOC)	selective catalytic reduction (SCR) system and an oxidation catalyst	2.67	LBS PER HOUR	1-HR AVERAGING, EXCLUDING STARTUP
LA-0257	SABINE PASS LNG TERMINAL	12/06/2011 ACT	Generator Engines (2)	2012	hp	Volatile Organic Compounds (VOC)	Comply with 40 CFR 60 Subpart JJJ	4.43	LB/H	HOURLY MAXIMUM
LA-0292	HOLBROOK COMPRESSOR STATION	01/22/2016 ACT	Waukesha 16V-275GL Compressor Engines Nos. 1-12	5000	HP	Volatile Organic Compounds (VOC)	CO oxidation catalyst, use of natural gas as fuel, good equipment design, and proper combustion techniques	1.25	LB/HR	HOURLY MAXIMUM
MI-0393	RAY COMPRESSOR STATION	10/14/2010 ACT	Five spark ignition internal combustion engines	32	MMBTU/H	Volatile Organic Compounds (VOC)	Oxidation catalyst	0.19	G/B-HP-H	ACCORDING TO TEST METHOD
MI-0412	HOLLAND BOARD OF PUBLIC WORKS - EAST 5TH STREET	12/04/2013 ACT	Emergency Engine--natural gas (EUNGENGINE)	1000	kW	Volatile Organic Compounds (VOC)	Oxidation catalyst and good combustion practices	0.5	G/HP-H	TEST PROTOCOL
MI-0412	HOLLAND BOARD OF PUBLIC WORKS - EAST 5TH STREET	12/04/2013 ACT	Emergency Engine --Diesel Fire Pump (EUFPENGINE)	165	HP	Volatile Organic Compounds (VOC)	Good combustion practices	0.001	LB/H	TEST PROTOCOL
MI-0424	HOLLAND BOARD OF PUBLIC WORKS - EAST 5TH STREET	12/05/2016 ACT	EUNGENGINE (Emergency engine--natural gas)	500	H/YR	Volatile Organic Compounds (VOC)	Oxidation catalyst and good combustion practices.	0.5	G/HP-H	TEST PROTOCOL WILL SPECIFY AVG TIME.
MI-0424	HOLLAND BOARD OF PUBLIC WORKS - EAST 5TH STREET	12/05/2016 ACT	EUFPENGINE (Emergency engine--diesel fire pump)	500	H/YR	Volatile Organic Compounds (VOC)	Good combustion practices	0.47	LB/H	TEST PROTOCOL WILL SPECIFY AVG TIME
*MI-0440	MICHIGAN STATE UNIVERSITY	05/22/2019 ACT	FGENGINES	16500	HP	Volatile Organic Compounds (VOC)	Oxidation catalyst	11	LB/H	EACH ENG./HOURLY/EXCEPT DURING START-SHU
*MI-0441	LBWL--ERICKSON STATION	12/21/2018 ACT	EUEMGNG1--A 1500 HP natural gas fueled emergency engine	1500	HP	Volatile Organic Compounds (VOC)	Burn natural gas and be NSPS compliant	1	G/HP-H	HOURLY
OK-0148	BUFFALO CREEK PROCESSING PLANT	09/12/2012 ACT	Large Internal Combustion Engines (>500 hp)	1775	Horsepower	Volatile Organic Compounds (VOC)	Oxidation Catalyst	0.22	GM/HP-HR	1-HR
OK-0148	BUFFALO CREEK PROCESSING PLANT	09/12/2012 ACT	Large Internal Combustion Engines (>500 hp)	2370	Horsepower	Volatile Organic Compounds (VOC)	Oxidation Catalyst	0.22	GM/HP-HR	1-HR
OK-0153	ROSE VALLEY PLANT	03/01/2013 ACT	COMPRESSOR ENGINE 1,775-HP CAT G3606LE	1775	HP	Volatile Organic Compounds (VOC)	EACH ENGINE EQUIPPED W/OXIDATION CATALYST.	0.13	GM/HP-HR	3-HR AVG
PA-0286	MOXIE ENERGY LLC/PATRIOT GENERATION PLT	01/31/2013 ACT	Fire Pump Engine - 460 BHP	0		Volatile Organic Compounds (VOC)		0.1	G/HP-H	
PA-0286	MOXIE ENERGY LLC/PATRIOT GENERATION PLT	01/31/2013 ACT	EMERGENCY GENERATOR-ENGINE	0		Volatile Organic Compounds (VOC)		0.01	GM/B-HP-H	EXPRESSED AS THC
PA-0287	WELLING COMPRESSOR STATION	09/27/2011 ACT	CATERPILLAR G3516B COMPRESSOR ENGINES (2)	0		Volatile Organic Compounds (VOC)	Oxidation Catalyst - Miratech	0.12	G/B-HP-H	EACH ENGINE
PA-0287	WELLING COMPRESSOR STATION	09/27/2011 ACT	WAUKESHA P9390GSI COMPRESSOR ENGINES (4) (1980 BHP)	0		Volatile Organic Compounds (VOC)	3-way catalyst, Johnson Matthey	0.12	G/B-HP-H	EACH ENGINE
PA-0301	CARPENTER COMPRESSOR STATION	03/31/2014 ACT	Three Four Stroke Lean Burn Engine - Caterpillar G3608 TA, 2370 BHP	0		Volatile Organic Compounds (VOC)	Oxidation Catalyst	0.25	G/BHP-HR	NONMETHANENONETHANE HYDROCARBON AS PROPA
PA-0301	CARPENTER COMPRESSOR STATION	03/31/2014 ACT	One four stroke lean burn engine, Caterpillar Model G3612 TA, 3550 bhp	0		Volatile Organic Compounds (VOC)	Oxidation Catalyst	0.25	G-BHP-HR	
PA-0302	CLERMONT COMPRESSOR STATION	04/16/2014 ACT	Spark Ignited 4 stroke Rich Burn Engine (7 units)	0		Volatile Organic Compounds (VOC)	NSCR	0.2	G/BHP-HR	
TX-0680	SONORA GAS PLANT	06/14/2013 ACT	Refrigeration compressor engine	1183	hp	Volatile Organic Compounds (VOC)	oxidation catalyst	0.245	G/HP-HR	1 HOUR
TX-0680	SONORA GAS PLANT	06/14/2013 ACT	Recompression compressor engine	1380	hp	Volatile Organic Compounds (VOC)	oxidation catalyst	0.245	G/HP-HR	
TX-0692	RED GATE POWER PLANT	12/20/2013 ACT	(12) reciprocating internal combustion engines	18	MW	Volatile Organic Compounds (VOC)	oxidation catalyst	0.3	G/HP-HR	1 HOUR
TX-0755	RAMSEY GAS PLANT	05/21/2015 ACT	Internal Combustion Compressor Engines	206149	MMBtu/yr	Volatile Organic Compounds (VOC)	Ultra lean-burn engines firing residue gas which is equivalent to natural gas, , and use of oxidation catalysts	0.091	G/HP HR	
*KS-0030	MID-KANSAS ELECTRIC COMPANY, LLC - RUBART STATION	03/31/2016 ACT	Spark ignition RICE emergency AC generators	450	kW	Volatile Organic Compounds (VOC)		1	G/HP-HR	EXCLUDES STARTUP, SHUTDOWN & MALFUNCTION
LA-0292	HOLBROOK COMPRESSOR STATION	01/22/2016 ACT	Emergency Generators No. 1 & No. 2	1341	HP	Volatile Organic Compounds (VOC)	Good combustion practices consistent with the manufacturer's recommendations to maximize fuel efficiency and mini	0.83	LB/HR	HOURLY MAXIMUM
MI-0393	RAY COMPRESSOR STATION	10/14/2010 ACT	Emergency generator	500	H/YR	Volatile Organic Compounds (VOC)		0.81	G/B-HP-H	TEST METHOD
*MI-0441	LBWL--ERICKSON STATION	12/21/2018 ACT	EUCTGHRSG1--A 667 MMBTU/H NG fired combustion turbine generator coupled wit	667	MMBTU/H	Volatile Organic Compounds (VOC)	An oxidation catalyst for VOC control for each CTG/HRSG unit, good combustion practices.	3	PPM	PPMVD@15%O2; HOURLY EXC.START/SHUT; NOTE
OK-0153	ROSE VALLEY PLANT	03/01/2013 ACT	EMERGENCY GENERATORS 2, 889-HP CAT G3520C IM	2889	HP	Volatile Organic Compounds (VOC)	OXIDATION CATALYST	0.44	GM/HP-HR	3-HR
PA-0286	MOXIE ENERGY LLC/PATRIOT GENERATION PLT	01/31/2013 ACT	EMERGENCY GENERATOR-ENGINE	0		Volatile Organic Compounds (VOC)		0.01	GM/B-HP-H	EXPRESSED AS THC
PA-0297	KELLY IMG ENERGY LLC/KELLY IMG PLT	05/23/2013 ACT	3.11 MW GENERATORS (WAUKESHA) #1 and #2	0		Volatile Organic Compounds (VOC)		0.176	G/BHP-HR	PER ENGINE (INCLUDING FORMALDEHYDE)
SC-0170	BP AMOCO CHEMICAL COMPANY - COOPER RIVER PLANT	11/07/2014 ACT	#1 OXIDATION UNIT NEW EMERGENCY GENERATORS	0		Volatile Organic Compounds (VOC)	100 HOURS PER YEAR NON-EMERGENCY USE, TIER 3 EMISSION STANDARDS, AND USE OF ONLY ULTRA LOW SULFUR (	0		
WY-0066	MEDICINE BOW IGL PLANT	03/04/2009 ACT	BLACK START GENERATOR 1	2889	HP	Volatile Organic Compounds (VOC)	LIMITED OPERATING HOURS (250 HR/YR)	0.9	G/HP-H	HOURLY
WY-0066	MEDICINE BOW IGL PLANT	03/04/2009 ACT	BLACK START GENERATOR 2	2889	HP	Volatile Organic Compounds (VOC)	LIMITED OPERATING HOURS (250 HR/YR)	0.9	G/HP-H	HOURLY
WY-0066	MEDICINE BOW IGL PLANT	03/04/2009 ACT	BLACK START GENERATOR 3	2889	HP	Volatile Organic Compounds (VOC)	LIMITED OPERATING HOURS (250 HR/YR)	0.9	G/HP-H	HOURLY

RBLC SUMMARY FOR ENGINES - PM										
RBLCID	FACILITY_NAME	PERMIT_ISSUANCE_DATE	PROCESS_NAME	THROUGHPUT	THROUGHPUT_UNIT	POLLUTANT	CONTROL_METHOD_DESCRIPTION	EMISSION_LIMIT_1	EMISSION_LIMIT_1_UNIT	EMISSION_LIMIT_1_AVG_TIME_CONDITION
CA-1192	AVENAL ENERGY PROJECT	06/21/2011 ACT	EMERGENCY IC ENGINE	550	KW	Particulate matter, total (TPM)	USE PUC QUALITY PIPELINE NATURAL GAS	0.34	G/HP-H	
CA-1192	AVENAL ENERGY PROJECT	06/21/2011 ACT	EMERGENCY IC ENGINE	550	KW	Particulate matter, total < 10 Âµ (TPM10)	USE PUC QUALITY PIPELINE NATURAL GAS	0.34	G/HP-H	
CA-1192	AVENAL ENERGY PROJECT	06/21/2011 ACT	EMERGENCY FIREWATER PUMP ENGINE	288	HP	Particulate matter, total (TPM)	USE ULTRA LOW SULFUR FUEL NOT TO EXCEED 15 PPMVD FUEL SULFUR, OPERATIONAL L	0		
CA-1192	AVENAL ENERGY PROJECT	06/21/2011 ACT	EMERGENCY FIREWATER PUMP ENGINE	288	HP	Particulate matter, total < 10 Âµ (TPM10)	USE ULTRA LOW SULFUR FUEL NOT TO EXCEED 15 PPMVD FUEL SULFUR, OPERATIONAL	0		
*FL-0368	NUCOR STEEL FLORIDA FACILITY	02/14/2019 ACT	Emergency Engines	0		Particulate matter, filterable (FPM)	Good combustion practices	0.048	G/HP-HR	
KS-0035	LACEY RANDALL GENERATION FACILITY, LLC	01/24/2014 ACT	spark ignition four stroke lean burn reciprocating internal combustion engine (RICE) ele	12526	BHP	Particulate matter, total (TPM)	selective catalytic reduction (SCR) system and an oxidation catalyst	1.44	LBS PER HOUR	30-DAY AVERAGING, INCLUDING STARTUP
KS-0035	LACEY RANDALL GENERATION FACILITY, LLC	01/24/2014 ACT	spark ignition four stroke lean burn reciprocating internal combustion engine (RICE) ele	12526	BHP	Particulate matter, total < 10 Âµ (TPM10)	selective catalytic reduction (SCR) system and an oxidation catalyst	2.22	LBS PER HOUR	24-HOUR AVERAGING, EXCLUDING STARTUP
KS-0035	LACEY RANDALL GENERATION FACILITY, LLC	01/24/2014 ACT	spark ignition four stroke lean burn reciprocating internal combustion engine (RICE) ele	12526	BHP	Particulate matter, total < 2.5 Âµ (TPM2.5)	selective catalytic reduction (SCR) system and an oxidation catalyst	2.22	LBS PER HOUR	24-HR AVERAGING, EXCLUDING STARTUP
LA-0257	SABINE PASS LNG TERMINAL	12/06/2011 ACT	Generator Engines (2)	2012	hp	Particulate matter, total (TPM)	fueled by natural gas	0.75	LB/H	HOURLY MAXIMUM
LA-0287	ALEXANDRIA COMPRESSOR STATION	07/21/2014 ACT	Solar Titan 130 Centrifugal Compressor Turbine Engine #907 (E08, EQT 13)	20405	HP	Particulate matter, total < 10 Âµ (TPM10)	Good combustion practices	3.06	LB/HR	HOURLY MAXIMUM
LA-0287	ALEXANDRIA COMPRESSOR STATION	07/21/2014 ACT	Solar Titan 130 Centrifugal Compressor Turbine Engine #907 (E08, EQT 13)	20405	HP	Particulate matter, total < 2.5 Âµ (TPM2.5)	Good combustion practices	3.06	LB/HR	HOURLY MAXIMUM
LA-0287	ALEXANDRIA COMPRESSOR STATION	07/21/2014 ACT	Solar Mars 90 Centrifugal Compressor Turbine Engine #908 (E09, EQT 14)	13699	HP	Particulate matter, total < 10 Âµ (TPM10)	Good combustion practices	2.22	LB/HR	HOURLY MAXIMUM
LA-0287	ALEXANDRIA COMPRESSOR STATION	07/21/2014 ACT	Solar Mars 90 Centrifugal Compressor Turbine Engine #908 (E09, EQT 14)	13699	HP	Particulate matter, total < 2.5 Âµ (TPM2.5)	Good combustion practices	2.22	LB/HR	HOURLY MAXIMUM
LA-0287	ALEXANDRIA COMPRESSOR STATION	07/21/2014 ACT	Emergency Generator Reciprocating Engine (G30, EQT 15)	1175	HP	Particulate matter, total < 10 Âµ (TPM10)	Good combustion practices; use of natural gas as fuel; limit non-emergency use to <= 10	0.004	LB/HR	HOURLY MAXIMUM
LA-0287	ALEXANDRIA COMPRESSOR STATION	07/21/2014 ACT	Emergency Generator Reciprocating Engine (G30, EQT 15)	1175	HP	Particulate matter, total < 2.5 Âµ (TPM2.5)	Good combustion practices; use of natural gas as fuel; limit non-emergency use to <= 10	0.004	LB/HR	HOURLY MAXIMUM
LA-0292	HOLBROOK COMPRESSOR STATION	01/22/2016 ACT	Waukesha 16V-275GL Compressor Engines Nos. 1-12	5000	HP	Particulate matter, total < 2.5 Âµ (TPM2.5)	Use of natural gas as fuel, good equipment design, and proper combustion techniques	0.003	LB/HR	HOURLY MAXIMUM
MI-0412	HOLLAND BOARD OF PUBLIC WORKS - EAST 5TH	12/04/2013 ACT	Emergency Engine--natural gas (EUNGENGINE)	1000	kW	Particulate matter, filterable (FPM)	Good combustion practices	0.0001	LB/MMBTU	TEST PROTOCOL
MI-0412	HOLLAND BOARD OF PUBLIC WORKS - EAST 5TH	12/04/2013 ACT	Emergency Engine--natural gas (EUNGENGINE)	1000	kW	Particulate matter, total < 10 Âµ (TPM10)	Good combustion practices	0.01	LB/MMBTU	TEST PROTOCOL
MI-0412	HOLLAND BOARD OF PUBLIC WORKS - EAST 5TH	12/04/2013 ACT	Emergency Engine--natural gas (EUNGENGINE)	1000	kW	Particulate matter, total < 2.5 Âµ (TPM2.5)	Good combustion practices	0.01	LB/MMBTU	TEST PROTOCOL
MI-0412	HOLLAND BOARD OF PUBLIC WORKS - EAST 5TH	12/04/2013 ACT	Emergency Engine --Diesel Fire Pump (EUFPENGINE)	165	HP	Particulate matter, filterable (FPM)	Good combustion practices	0.22	G/HP-H	TEST PROTOCOL
MI-0412	HOLLAND BOARD OF PUBLIC WORKS - EAST 5TH	12/04/2013 ACT	Emergency Engine --Diesel Fire Pump (EUFPENGINE)	165	HP	Particulate matter, total < 10 Âµ (TPM10)	Good combustion practices	0.09	LB/MMBTU	TEST PROTOCOL
MI-0412	HOLLAND BOARD OF PUBLIC WORKS - EAST 5TH	12/04/2013 ACT	Emergency Engine --Diesel Fire Pump (EUFPENGINE)	165	HP	Particulate matter, total < 2.5 Âµ (TPM2.5)	Good combustion practices	0.09	LB/MMBTU	TEST PROTOCOL
MI-0424	HOLLAND BOARD OF PUBLIC WORKS - EAST 5TH	12/05/2016 ACT	EUNGENGINE (Emergency engine--natural gas)	500	H/YR	Particulate matter, filterable (FPM)	Good combustion practices.	0.0001	LB/MMBTU	TEST PROTOCOL WILL SPECIFY AVG TIME
MI-0424	HOLLAND BOARD OF PUBLIC WORKS - EAST 5TH	12/05/2016 ACT	EUNGENGINE (Emergency engine--natural gas)	500	H/YR	Particulate matter, total < 10 Âµ (TPM10)	Good combustion practices.	0.01	LB/MMBTU	TEST PROTOCOL WILL SPECIFY AVG TIME.
MI-0424	HOLLAND BOARD OF PUBLIC WORKS - EAST 5TH	12/05/2016 ACT	EUNGENGINE (Emergency engine--natural gas)	500	H/YR	Particulate matter, total < 2.5 Âµ (TPM2.5)	Good combustion practices.	0.01	LB/MMBTU	TEST PROTOCOL WILL SPECIFY AVG TIME.
MI-0424	HOLLAND BOARD OF PUBLIC WORKS - EAST 5TH	12/05/2016 ACT	EUFPENGINE (Emergency engine--diesel fire pump)	500	H/YR	Particulate matter, filterable (FPM)	Good combustion practices.	0.22	G/HP-H	TEST PROTOCOL WILL SPECIFY AVG TIME
MI-0424	HOLLAND BOARD OF PUBLIC WORKS - EAST 5TH	12/05/2016 ACT	EUFPENGINE (Emergency engine--diesel fire pump)	500	H/YR	Particulate matter, total < 10 Âµ (TPM10)	Good combustion practices.	0.09	LB/MMBTU	TEST PROTOCOL WILL SPECIFY AVG TIME
MI-0424	HOLLAND BOARD OF PUBLIC WORKS - EAST 5TH	12/05/2016 ACT	EUFPENGINE (Emergency engine--diesel fire pump)	500	H/YR	Particulate matter, total < 2.5 Âµ (TPM2.5)	Good combustion practices.	0.09	LB/MMBTU	TEST PROTOCOL WILL SPECIFY AVG TIME
MI-0426	DTE GAS COMPANY - MILFORD COMPRESSOR ST	03/24/2017 ACT	EUN_EM_GEN (Natural gas emergency engine).	205	H/YR	Particulate matter, total < 10 Âµ (TPM10)	Good combustion practices and low sulfur fuel (pipeline quality natural gas).	0.01	LB/MMBTU	
MI-0426	DTE GAS COMPANY - MILFORD COMPRESSOR ST	03/24/2017 ACT	EUN_EM_GEN (Natural gas emergency engine).	205	H/YR	Particulate matter, total < 2.5 Âµ (TPM2.5)	Good combustion practices and low sulfur fuel (pipeline quality natural gas).	0.01	LB/MMBTU	
*MI-0440	MICHIGAN STATE UNIVERSITY	05/22/2019 ACT	FGENGINES	16500	HP	Particulate matter, filterable (FPM)	Natural gas and good combustion practices	2	LB/H	HOURLY
*MI-0440	MICHIGAN STATE UNIVERSITY	05/22/2019 ACT	FGENGINES	16500	HP	Particulate matter, total < 10 Âµ (TPM10)	Natural gas and good combustion practices	3	LB/H	EACH ENG/HOURLY/EXCEPT STARTUP/SHUTDOWN
*MI-0440	MICHIGAN STATE UNIVERSITY	05/22/2019 ACT	FGENGINES	16500	HP	Particulate matter, total < 2.5 Âµ (TPM2.5)	Natural gas and good combustion practices	3	LB/H	EACH ENG/HOURLY EXC STARTUP/SHUTDOWN
*MI-0441	LBWL--ERICKSON STATION	12/21/2018 ACT	EUEMGNG1--A 1500 HP natural gas fueled emergency engine	1500	HP	Particulate matter, total < 10 Âµ (TPM10)	Burn pipeline quality natural gas	0.13	LB/H	HOURLY
*MI-0441	LBWL--ERICKSON STATION	12/21/2018 ACT	EUEMGNG1--A 1500 HP natural gas fueled emergency engine	1500	HP	Particulate matter, total < 2.5 Âµ (TPM2.5)	Burn pipeline quality natural gas	0.13	LB/H	HOURLY
*MI-0441	LBWL--ERICKSON STATION	12/21/2018 ACT	EUEMGD1--A 1500 HP diesel fueled emergency engine	1500	HP	Particulate matter, total < 10 Âµ (TPM10)	Good combustion practices, burn ultra-low sulfur diesel fuel and be NSPS compliant.	0.69	LB/H	HOURLY
*MI-0441	LBWL--ERICKSON STATION	12/21/2018 ACT	EUEMGD1--A 1500 HP diesel fueled emergency engine	1500	HP	Particulate matter, total < 2.5 Âµ (TPM2.5)	Ultra low-sulfur diesel fuel.	0.69	LB/H	HOURLY
*MI-0441	LBWL--ERICKSON STATION	12/21/2018 ACT	EUEMGD2--A 6000 HP diesel fuel fired emergency engine	6000	HP	Particulate matter, total < 10 Âµ (TPM10)	Good combustion practices, burn ultra low sulfur diesel fuel, and be NSPS compliant.	2.7	LB/H	HOURLY
*MI-0441	LBWL--ERICKSON STATION	12/21/2018 ACT	EUEMGD2--A 6000 HP diesel fuel fired emergency engine	6000	HP	Particulate matter, total < 2.5 Âµ (TPM2.5)	Ultra low sulfur diesel fuel.	2.7	LB/H	HOURLY
*MI-0441	LBWL--ERICKSON STATION	12/21/2018 ACT	EUFPRICE--A 315 HP diesel fueled emergency engine	2.5	MMBTU/H	Particulate matter, total < 10 Âµ (TPM10)	Ultra low sulfur diesel fuel and good combustion practices.	0.12	LB/H	HOURLY
*MI-0441	LBWL--ERICKSON STATION	12/21/2018 ACT	EUFPRICE--A 315 HP diesel fueled emergency engine	2.5	MMBTU/H	Particulate matter, total < 2.5 Âµ (TPM2.5)	Ultra low sulfur diesel fuel and good combustion practices.	0.12	LB/H	HOURLY
OK-0148	BUFFALO CREEK PROCESSING PLANT	09/12/2012 ACT	Large Internal Combustion Engines (>500 hp)	1775	Horsepower	Particulate matter, total < 2.5 Âµ (TPM2.5)		0.01	LB/MMBTU	
OK-0148	BUFFALO CREEK PROCESSING PLANT	09/12/2012 ACT	Large Internal Combustion Engines (>500 hp)	2370	Horsepower	Particulate matter, total < 2.5 Âµ (TPM2.5)		0.01	LB/MMBTU	
OK-0153	ROSE VALLEY PLANT	03/01/2013 ACT	COMPRESSOR ENGINE 1,775-HP CAT G3606LE	1775	HP	Particulate matter, total < 2.5 Âµ (TPM2.5)	NATURAL GAS COMBUSTION PRACTICES.	0.01	LB/MMBTU	3-HR AVG
PA-0286	MOXIE ENERGY LLC/PATRIOT GENERATION PLT	01/31/2013 ACT	Fire Pump Engine - 460 BHP	0		Particulate matter, total < 10 Âµ (TPM10)		0.09	G/HP-H	
PA-0286	MOXIE ENERGY LLC/PATRIOT GENERATION PLT	01/31/2013 ACT	Fire Pump Engine - 460 BHP	0		Particulate matter, total < 2.5 Âµ (TPM2.5)		0.09	G/HP-H	
PA-0286	MOXIE ENERGY LLC/PATRIOT GENERATION PLT	01/31/2013 ACT	EMERGENCY GENERATOR-ENGINE	0		Particulate matter, total < 10 Âµ (TPM10)		0.02	GM/B-HP-H	
PA-0286	MOXIE ENERGY LLC/PATRIOT GENERATION PLT	01/31/2013 ACT	EMERGENCY GENERATOR-ENGINE	0		Particulate matter, total < 2.5 Âµ (TPM2.5)		0.02	GM/B-HP-H	
PA-0287	WELLING COMPRESSOR STATION	09/27/2011 ACT	JOHN DEERE DIESEL ENGINE (197 BHP)	0		Particulate matter, total (TPM)		0.13	G/B-HP-H	
TX-0692	RED GATE POWER PLANT	12/20/2013 ACT	(12) reciprocating internal combustion engines	18	MW	Particulate matter, total < 2.5 Âµ (TPM2.5)		0		
AL-0301	NUCOR STEEL TUSCALOOSA, INC.	07/22/2014 ACT	DIESEL FIRED EMERGENCY GENERATOR	800	HP	Particulate matter, filterable (FPM)		0.0007	LB/HP-H	
AL-0301	NUCOR STEEL TUSCALOOSA, INC.	07/22/2014 ACT	PROPANE FIRED EMERGENCY GENERATOR	400	KW	Particulate matter, filterable (FPM)		0.7	LB/1000 GAL	
IN-0167	MAGNETATION LLC	04/16/2013 ACT	EMERGENCY GENERATOR	620	HP	Particulate matter, total < 10 Âµ (TPM10)	USE OF NATURAL GAS AND GOOD COMBUSTION PRACTICES	500	H/YR	12-MONTH PERIOD
IN-0167	MAGNETATION LLC	04/16/2013 ACT	EMERGENCY GENERATOR	620	HP	Particulate matter, total < 2.5 Âµ (TPM2.5)	USE OF NATURAL GAS AND GOOD COMBUSTION PRACTICES	500	H/YR	12-MONTH PERIOD
IN-0167	MAGNETATION LLC	04/16/2013 ACT	EMERGENCY GENERATOR	620	HP	Particulate matter, filterable (FPM)	RESTRICTED TO USE OF NATURAL GAS AND GOOD COMBUSTION PRACTICES	500	H/YR	12-MONTH PERIOD
IN-0185	MAG PELLET LLC	04/24/2014 ACT	EMERGENCY GENERATORS	620	HP	Particulate matter, filterable (FPM)		0.2	G/KW-H	
IN-0185	MAG PELLET LLC	04/24/2014 ACT	EMERGENCY GENERATORS	620	HP	Particulate matter, filterable < 10 Âµ (FPM10)		0.2	G/KW-H	
IN-0185	MAG PELLET LLC	04/24/2014 ACT	EMERGENCY GENERATORS	620	HP	Particulate matter, filterable < 2.5 Âµ (FPM2.5)		0.2	G/KW-H	
*KS-0030	MID-KANSAS ELECTRIC COMPANY, LLC - RUBART	03/31/2016 ACT	Spark ignition RICE emergency AC generators	450	kW	Particulate matter, total (TPM)		0.0001	G/HP-HR	EXCLUDES STARTUP, SHUTDOWN & MALFUNCTION
*KS-0030	MID-KANSAS ELECTRIC COMPANY, LLC - RUBART	03/31/2016 ACT	Spark ignition RICE emergency AC generators	450	kW	Particulate matter, total < 10 Âµ (TPM10)		0.0001	G/HP-HR	EXCLUDES STARTUP, SHUTDOWN & MALFUNCTION
*KS-0030	MID-KANSAS ELECTRIC COMPANY, LLC - RUBART	03/31/2016 ACT	Spark ignition RICE emergency AC generators	450	kW	Particulate matter, total < 2.5 Âµ (TPM2.5)		0.0001	G/HP-HR	EXCLUDES STARTUP, SHUTDOWN & MALFUNCTION
LA-0256	COGENERATION PLANT	12/06/2011 ACT	EMERGENCY GENERATOR	1818	HP	Particulate matter, total < 10 Âµ (TPM10)	USE OF NATURAL GAS AS FUEL AND GOOD COMBUSTION PRACTICES	0.01	LB/H	HOURLY MAXIMUM
LA-0256	COGENERATION PLANT	12/06/2011 ACT	EMERGENCY GENERATOR	1818	HP	Particulate matter, total < 2.5 Âµ (TPM2.5)	USE OF NATURAL GAS AS FUEL AND GOOD COMBUSTION PRACTICES	0.01	LB/H	HOURLY MAXIMUM
LA-0292	HOLBROOK COMPRESSOR STATION	01/22/2016 ACT	Emergency Generators No. 1 & No. 2	134	HP	Particulate matter, total < 2.5 Âµ (TPM2.5)	Use of a certified engine, low sulfur diesel, and limiting non-emergency use to no more t	0.44	LB/HR	HOURLY MAXIMUM
MI-0401	MIDLAND POWER STATION	12/21/2011 ACT	Emergency generator	1200	kW output	Particulate matter, total < 10 Âµ (TPM10)		9.99	E-3 LB/MMBTU	CONTINUOUS
MI-0401	MIDLAND POWER STATION	12/21/2011 ACT	Emergency generator	1200	kW output	Particulate matter, total < 2.5 Âµ (TPM2.5)		9.99	E-3 LB/MMBTU	CONTINUOUS
*MI-0441	LBWL--ERICKSON STATION	12/21/2018 ACT	EUCTGHRSG1--A 667 MMBTU/H NG fired combustion turbine generator coupled with a	667	MMBTU/H	Particulate matter, total < 10 Âµ (TPM10)	Pipeline quality natural gas, inlet air conditioning, and good combustion practices.	6.02	LB/H	HOURLY
*MI-0441	LBWL--ERICKSON STATION	12/21/2018 ACT	EUCTGHRSG1--A 667 MMBTU/H NG fired combustion turbine generator coupled with a	667	MMBTU/H	Particulate matter, total < 2.5 Âµ (TPM2.5)	Pipeline quality natural gas, inlet air conditioning and good combustion practices.	6.02	LB/H	HOURLY
OK-0153	ROSE VALLEY PLANT	03/01/2013 ACT	EMERGENCY GENERATORS 2,889-HP CAT G3520C IM	2889	HP	Particulate matter, total < 2.5 Âµ (TPM2.5)	NATURAL GAS COMBUSTION	0.01	LB/MMBTU	3-HR
PA-0286	MOXIE ENERGY LLC/PATRIOT GENERATION PLT	01/31/2013 ACT	EMERGENCY GENERATOR-ENGINE	0		Particulate matter, total < 10 Âµ (TPM10)		0.02	GM/B-HP-H	
PA-0286	MOXIE ENERGY LLC/PATRIOT GENERATION PLT	01/31/2013 ACT	EMERGENCY GENERATOR-ENGINE	0		Particulate matter, total < 2.5 Âµ (TPM2.5)		0.02	GM/B-HP-H	

RBLC SUMMARY FOR ENGINES - CO_2e										
RBLCID	FACILITY_NAME	PERMIT_ISSUANCE_DATE	PROCESS_NAME	THROUGHPUT	THROUGHPUT_UNIT	POLLUTANT	CONTROL_METHOD_DESCRIPTION	EMISSION_LIMIT_1	EMISSION_LIMIT_1_UNIT	EMISSION_LIMIT_1_AVG_TIME_CONDITION
*FL-0368	NUCOR STEEL FLORIDA FACILITY	02/14/2019 ACT	Emergency Engines	0		Carbon Dioxide Equivalent (CO2e)	Good combustion practices	117.1	LB/MMBTU	
KS-0035	LACEY RANDALL GENERATION FACILITY, LLC	01/24/2014 ACT	spark ignition four stroke lean burn reciprocating internal combustion engine (RICE) el	1252	BHP	Carbon Dioxide Equivalent (CO2e)		9330	LBS PER HOUR	ANNUAL AVERAGING, EXCLUDING STARTUP
LA-0257	SABINE PASS LNG TERMINAL	12/06/2011 ACT	Generator Engines (2)	2012	hp	Carbon Dioxide Equivalent (CO2e)	Fueled by natural gas, good combustion/operating practices	412	T ONS/YR	ANNUAL MAXIMUM
LA-0266	EUNICE GAS EXTRACTION PLANT	05/01/2013 ACT	Compressor Engines 1, 2, & 3 (EQT 0057, 0058, & 0059)	3550	HP	Carbon Dioxide Equivalent (CO2e)	Compliance with NSPS JJJJ	0		
LA-0287	ALEXANDRIA COMPRESSOR STATION	07/21/2014 ACT	Solar Titan 130 Centrifugal Compressor Turbine Engine #907 (E08, EQT 13)	20405	HP	Carbon Dioxide Equivalent (CO2e)	Good combustion practices and use of natural gas as fuel	19887	LB/HR	HOURLY MAXIMUM
LA-0287	ALEXANDRIA COMPRESSOR STATION	07/21/2014 ACT	Solar Mars 90 Centrifugal Compressor Turbine Engine #908 (E09, EQT 14)	13699	HP	Carbon Dioxide Equivalent (CO2e)	Good combustion practices and use of natural gas as fuel	14416	LB/HR	HOURLY MAXIMUM
LA-0287	ALEXANDRIA COMPRESSOR STATION	07/21/2014 ACT	Emergency Generator Reciprocating Engine (G30, EQT 15)	1175	HP	Carbon Dioxide Equivalent (CO2e)	Good combustion practices and use of natural gas as fuel	1160	LB/HR	HOURLY MAXIMUM
LA-0292	HOLBROOK COMPRESSOR STATION	01/22/2016 ACT	Waukesha 16V-275GL Compressor Engines Nos. 1-12	5000	HP	Carbon Dioxide Equivalent (CO2e)		21170	T PY	ANNUAL MAXIMUM
MI-0412	HOLLAND BOARD OF PUBLIC WORKS - EAST 5TH STREET	12/04/2013 ACT	Emergency Engine--natural gas (EUNGENGINE)	1000	kW	Carbon Dioxide Equivalent (CO2e)	Good combustion practices	116	T/YR	12-MO ROLLING TIME PERIOD
MI-0412	HOLLAND BOARD OF PUBLIC WORKS - EAST 5TH STREET	12/04/2013 ACT	Emergency Engine --Diesel Fire Pump (EUFPENGINE)	165	HP	Carbon Dioxide Equivalent (CO2e)	Good combustion practices	0.29	T/YR	12-MO ROLLING TIME PERIOD
MI-0424	HOLLAND BOARD OF PUBLIC WORKS - EAST 5TH STREET	12/05/2016 ACT	EUNGENGINE (Emergency engine--natural gas)	500	H/YR	Carbon Dioxide Equivalent (CO2e)	Good combustion practices.	116	T/YR	12-MO ROLLING TIME PERIOD
MI-0424	HOLLAND BOARD OF PUBLIC WORKS - EAST 5TH STREET	12/05/2016 ACT	EUFPENGINE (Emergency engine--diesel fire pump)	500	H/YR	Carbon Dioxide Equivalent (CO2e)	Good combustion practices.	55.67	T/YR	12-MONTH ROLLING TIME PERIOD
MI-0426	DTE GAS COMPANY - MILFORD COMPRESSOR STATION	03/24/2017 ACT	EUN_EM_GEN (Natural gas emergency engine).	205	H/YR	Carbon Dioxide Equivalent (CO2e)	Use of pipeline quality natural gas and energy efficiency measures.	247	T/YR	12-MO ROLLING TIME PERIOD
*MI-0440	MICHIGAN STATE UNIVERSITY	05/22/2019 ACT	FGENGINES	1650	HP	Carbon Dioxide Equivalent (CO2e)	Utilize low-carbon fuels and implement energy efficiency measures and preventative maintenance pursuant to m	48724	T/YR	12-MO ROLLING TIME PERIOD
*MI-0441	LBWL-ERICKSON STATION	12/21/2018 ACT	EUEMGNG1--A 1500 HP natural gas fueled emergency engine	1500	HP	Carbon Dioxide Equivalent (CO2e)	Burn pipeline quality natural gas	300	T/YR	12-MO ROLLING TIME PERIOD
*MI-0441	LBWL-ERICKSON STATION	12/21/2018 ACT	EUEMGD1--A 1500 HP diesel fueled emergency engine	1500	HP	Carbon Dioxide Equivalent (CO2e)	Good combustion practices and energy efficiency measures.	406	T/YR	12-MONTH ROLLING TIME PERIOD
*MI-0441	LBWL-ERICKSON STATION	12/21/2018 ACT	EUEMGD2--A 6000 HP diesel fuel fired emergency engine	6000	HP	Carbon Dioxide Equivalent (CO2e)	Good combustion practices and energy efficiency measures.	1590	T/YR	12-MONTH ROLLING TIME PERIOD
*MI-0441	LBWL-ERICKSON STATION	12/21/2018 ACT	EUFPRICE--A 315 HP diesel fueled emergency engine	2.5	MMBTU/H	Carbon Dioxide Equivalent (CO2e)	Good combustion practices and energy efficiency measures.	20	T/YR	12-MO ROLLING TIME PERIOD
OK-0142	WAYNOKA NATURAL GAS PROCESSING PLANT	01/17/2012 ACT	Large Internal Combustion Engines (>500 hp)	3550	HORSEPOWER	Carbon Dioxide Equivalent (CO2e)		0		
OK-0142	WAYNOKA NATURAL GAS PROCESSING PLANT	01/17/2012 ACT	Misc. Internal Combustion Engine	635	Horsepower	Carbon Dioxide Equivalent (CO2e)		0		
OK-0148	BUFFALO CREEK PROCESSING PLANT	09/12/2012 ACT	Large Internal Combustion Engines (>500 hp)	1775	Horsepower	Carbon Dioxide Equivalent (CO2e)		7900	BTU/BHP-HR	
OK-0148	BUFFALO CREEK PROCESSING PLANT	09/12/2012 ACT	Large Internal Combustion Engines (>500 hp)	2370	Horsepower	Carbon Dioxide Equivalent (CO2e)		7900	BTU/BHP-HR	
OK-0153	ROSE VALLEY PLANT	03/01/2013 ACT	COMPRESSOR ENGINE 1,775-HP CAT G3606LE	1775	HP	Carbon Dioxide Equivalent (CO2e)		8452	BTU/BHP-HR	3-HR AVG
TX-0746	NUEVO MIDSTREAM, RAMSEY GAS PLANT	11/18/2014 ACT	Gas-Fired Internal Combustion Compression Engines	2061.49	MMBtu/yr	Carbon Dioxide Equivalent (CO2e)		412.3	LB CO2/MMSCF	12-MONTH ROLLING BASIS, INCLUDES MSS
IN-0167	MAGNETATION LLC	04/16/2013 ACT	EMERGENCY GENERATOR	620	HP	Carbon Dioxide Equivalent (CO2e)	USE OF NATURAL GAS AND GOOD COMBUSTION PRACTICES	144	T/YR	12-MONTH PERIOD
IN-0185	MAG PELLET LLC	04/24/2014 ACT	EMERGENCY GENERATORS	620	HP	Carbon Dioxide Equivalent (CO2e)		500	H	
LA-0256	COGENERATION PLANT	12/06/2011 ACT	EMERGENCY GENERATOR	1818	HP	Carbon Dioxide Equivalent (CO2e)	USE OF NATURAL GAS AS FUEL AND GOOD COMBUSTION PRACTICES	1509.23	LB/H	HOURLY MAXIMUM
LA-0292	HOLBROOK COMPRESSOR STATION	01/22/2016 ACT	Emergency Generators No. 1 & No. 2	1341	HP	Carbon Dioxide Equivalent (CO2e)		77	T PY	ANNUAL MAXIMUM
LA-0311	DONALDSONVILLE NITROGEN COMPLEX	07/15/2013 ACT	No. 6 Ammonia Plant Emergency Generator (16-13) and No. 5 Urea Plant Emergency G	300	HP	Carbon Dioxide Equivalent (CO2e)	Proper combustion controls (electronic air-to-fuel ratio controller, timing control, pre-chamber ignition, and turb	63.18	TPY	ANNUAL MAXIMUM
LA-0311	DONALDSONVILLE NITROGEN COMPLEX	07/15/2013 ACT	No. 5 Urea Plant Emergency Generator II (13-13, EQT 182)	2500	HP	Carbon Dioxide Equivalent (CO2e)	Proper combustion controls (electronic air-to-fuel ratio controller, timing control, pre-chamber ignition, and turb	526.51	TPY	ANNUAL MAXIMUM
*MI-0441	LBWL-ERICKSON STATION	12/21/2018 ACT	EUCTGHRSG1--A 667 MMBTU/H NG fired combustion turbine generator coupled with	667	MMBTU/H	Carbon Dioxide Equivalent (CO2e)	Low carbon fuel (pipeline quality natural gas), good combustion practices and energy efficiency measures.	430349	T/YR	12-MO ROLLING TIME PERIOD
OK-0153	ROSE VALLEY PLANT	03/01/2013 ACT	EMERGENCY GENERATORS 2,889-HP CAT G3520C IM	2889	HP	Carbon Dioxide Equivalent (CO2e)	EFFICIENT DESIGN AND COMBUSTION.	8212	BTU/BHP-HR	
TX-0741	APEX BETHEL ENERGY CENTER	03/13/2014 ACT	Emergency Generator	8600	scf/hr	Carbon Dioxide Equivalent (CO2e)		23	TPY OF CO2E	12-MONTH TOTAL ROLLING MONTHLY AVERAGE
TX-0742	APEX MATAGORDA ENERGY CENTER	04/14/2014 ACT	Emergency Generator	0		Carbon Dioxide Equivalent (CO2e)		23	TPY OF CO2E	12-MONTH TOTAL ROLLING MONTHLY AVERAGE
*WV-0031	MOCKINGBIRD HILL COMPRESSOR STATION	06/14/2018 ACT	EG-1 - Auxiliary (Emergency) Generator	755	hp	Carbon Dioxide Equivalent (CO2e)	Engine Manufacturer's design; limited to natural gas; and tune-up the engine once every five years.	0		

3. HEATERS <100 MMBTU/HR & > 100 MMBTU/HR (RLBC CODES 12.310 & 13.310)

RBLC SUMMARY FOR HEATERS - NO_x										
RBLCID	FACILITY_NAME	PERMIT_ISSUANCE_DATE	PROCESS_NAME	THROUGHPUT	THROUGHPUT_UNIT	POLLUTANT	CONTROL_METHOD_DESCRIPTION	EMISSION_LIMIT_1	EMISSION_LIMIT_1_UNIT	EMISSION_LIMIT_1_AVG_TIME_CONDITION
AK-0071	INTERNATIONAL STATION POWER PLANT	12/20/2010 ACT	Sigma Thermal Auxiliary Heater (1)	12.5	MMBTU/H	Nitrogen Oxides (NOx)	Low NOx Burners and Flue Gas Recirculation	32	LB/MMSCF	3-HOUR AVERAGE
AK-0083	KENAI NITROGEN OPERATIONS	01/06/2015 ACT	Startup Heater	101	MMBTU/H	Nitrogen Oxides (NOx)	Limited Use (200 hr/yr)	0.098	LB/MMBTU	
AR-0140	BIG RIVER STEEL LLC	09/18/2013 ACT	SMALL HEATERS AND DRYERS SN-05 THROUGH 19	0		Nitrogen Oxides (NOx)	COMBUSTION OF CLEAN FUEL	0.08	LB/MMBTU	
AR-0155	BIG RIVER STEEL LLC	11/07/2018 ACT	SMALL HEATERS AND DRYERS SN-05 THROUGH SN-11, SN-16, AND SN-17	0		Nitrogen Oxides (NOx)	LOW NOX BURNERS COMBUSTION OF CLEAN FUEL GOOD COMBUSTION PRACTICES	0.095	LB/MMBTU	
AR-0155	BIG RIVER STEEL LLC	11/07/2018 ACT	PREHEATER, GALVANIZING LINE SN-28	78.2	MMBTU/HR	Nitrogen Oxides (NOx)	SCR, LOW NOX BURNERS, AND COMBUSTION OF CLEAN FUEL AND GOOD COMBUSTION PRACT	0.035	LB/MMBTU	
*AR-0159	BIG RIVER STEEL LLC	04/05/2019 ACT	SMALL HEATERS AND DRYERS SN-16 through SN-19B	0		Nitrogen Oxides (NOx)	Low NOx burners, Combustion of clean fuel, and Good Combustion Practices	0.097	LB/MMBTU	
*AR-0159	BIG RIVER STEEL LLC	04/05/2019 ACT	SMALL HEATERS AND DRYERS SN-10 through SN-13	0		Nitrogen Oxides (NOx)	LOW NOX BURNERS, COMBUSTION OF CLEAN FUEL, AND GOOD COMBUSTION PRACTICES	0.095	LB/MMBTU	
*AR-0159	BIG RIVER STEEL LLC	04/05/2019 ACT	PREHEATERS, GALVANIZING LINE SN-28 and SN-29	0		Nitrogen Oxides (NOx)	SCR, LOW NOX BURNERS, AND COMBUSTION OF CLEAN FUEL AND	0.035	LB/MMBTU	
*AR-0159	BIG RIVER STEEL LLC	04/05/2019 ACT	COLD MILL SPACE HEATERS	0		Nitrogen Oxides (NOx)	Low NOx burners, Combustion of clean fuel, and Good Combustion Practices	0.08	LB/MMBTU	
CA-1190	PETROROCK- TUNNELL LEASE	01/24/2012 ACT	Heater	3	MMBTU/H	Nitrogen Oxides (NOx)	Low NOx burner	12	PPMVD@3% O2	40 MINUTES
CA-1191	VICTORVILLE 2 HYBRID POWER PROJECT	03/11/2010 ACT	AUXILIARY HEATER	40	MMBTU/H	Nitrogen Oxides (NOx)	OPERATIONAL RESTRICTION OF 1000 HR/YR	9	PPMVD	1-HR AVG, @3% O2
DE-0020	VALERO DELAWARE CITY REFINERY	02/26/2010 ACT	CRUDE UNIT ATMOSPHERIC HEATER 21-H-701			Nitrogen Oxides (NOx)	SCR	0.04	LB/MMBTU	3-HR ROLLING AV
DE-0020	VALERO DELAWARE CITY REFINERY	02/26/2010 ACT	CRUDE UNIT VACUUM HEATER 21-H-2	240	MMBTU/H	Nitrogen Oxides (NOx)	SCR	0.04	LB/MMBTU	3-HR ROLLING AV
FL-0356	OKEECHOBEE CLEAN ENERGY CENTER	03/09/2016 ACT	Two natural gas heaters	10	MMBtu/hr	Nitrogen Oxides (NOx)	Must have NOx emission design value less than 0.1 lb/MMBtu	0.1	LB/MMBTU	
*FL-0363	DANIA BEACH ENERGY CENTER	12/04/2017 ACT	Two natural gas heaters	9.9	MMBtu/hr	Nitrogen Oxides (NOx)	Manufacturer certification	0.1	LB/MMBTU	DESIGN VALUE
IA-0107	MARSHALLTOWN GENERATING STATION	04/14/2014 ACT	dew point heater	13.32	mmBtu/hr	Nitrogen Oxides (NOx)		0.013	LB/MMBTU	3-HOUR AVERAGE
IL-0129	CPV THREE RIVERS ENERGY CENTER	07/30/2018 ACT	Fuel Heater	12.8	mmBtu/hr	Nitrogen Oxides (NOx)	Low-NOx burners	0.011	LB/MMBTU	
*IL-0130	JACKSON ENERGY CENTER	12/31/2018 ACT	Fuel Heater	13	mmBtu/hour	Nitrogen Oxides (NOx)	Low-NOx combustion technology	0.011	LB/MMBTU	
IN-0263	MIDWEST FERTILIZER COMPANY LLC	03/23/2017 ACT	STARTUP HEATER EU-002	70	MMBTU/HR	Nitrogen Oxides (NOx)	GOOD COMBUSTION PRACTICES	12.611	LB/H	3 HOUR AVERAGE
IN-0285	WHITING CLEAN ENERGY, INC.	08/02/2017 ACT	Space Heaters	0		Nitrogen Oxides (NOx)		0.05	LB/MMBTU	UNITS 1-6, COMBUSTING NATURAL GAS
*KS-0030	MID-KANSAS ELECTRIC COMPANY, LLC - RUBART ST	03/31/2016 ACT	Indirect fuel-gas heater	2	mmBTU/hr	Nitrogen Oxides (NOx)		0.2	LB/H	EXCLUDES STARTUP, SHUTDOWN & MALFUNCTION
LA-0231	LAKE CHARLES GASIFICATION FACILITY	06/22/2009 ACT	SHIFT REACTOR STARTUP HEATER	34.2	MMBTU/H	Nitrogen Oxides (NOx)	GOOD DESIGN AND PROPER OPERATION	3.35	LB/H	MAXIMUM
LA-0231	LAKE CHARLES GASIFICATION FACILITY	06/22/2009 ACT	GASIFIER STARTUP PREHEATER BURNERS (5)	35	MMBTU/H	Nitrogen Oxides (NOx)	GOOD DESIGN AND PROPER OPERATION	3.85	LB/H	MAXIMUM (EACH)
LA-0231	LAKE CHARLES GASIFICATION FACILITY	06/22/2009 ACT	STEAM SUPERHEATERS (A & B)	415	MMBTU/H	Nitrogen Oxides (NOx)	ULTRA LOW NOX BURNERS (ULNB)	14.53	LB/H	TOTAL
LA-0231	LAKE CHARLES GASIFICATION FACILITY	06/22/2009 ACT	METHANATION STARTUP HEATERS	56.9	MMBTU/H	Nitrogen Oxides (NOx)	GOOD DESIGN AND PROPER OPERATION	5.58	LB/H	MAXIMUM
LA-0244	LAKE CHARLES CHEMICAL COMPLEX - LAB UNIT	11/29/2010 ACT	EQT0027 - PACOL CHARGE HEATER H-201	87.3	MMBTU/H	Nitrogen Oxides (NOx)	Low NOX Burners	7.15	LB/H	HOURLY MAXIMUM
LA-0244	LAKE CHARLES CHEMICAL COMPLEX - LAB UNIT	11/29/2010 ACT	EQT0028 - PACOL STARTUP HEATER H-202	21	MMBTU/H	Nitrogen Oxides (NOx)	low nox burners	2.71	LB/H	HOURLY MAXIMUM
LA-0244	LAKE CHARLES CHEMICAL COMPLEX - LAB UNIT	11/29/2010 ACT	EQT0029 - Hot Oil Heater H-601	170	MMBTU/H	Nitrogen Oxides (NOx)	low nox burners	19.69	LB/H	HOURLY MAXIMUM
LA-0272	AMMONIA PRODUCTION FACILITY	03/27/2013 ACT	AMMONIA START-UP HEATER (102-B)	59.4	MM BTU/HR	Nitrogen Oxides (NOx)	GOOD COMBUSTION PRACTICES: PROPER DESIGN OF BURNER AND FIREBOX COMPONENTS; M	14.65	LB/H	HOURLY MAXIMUM
LA-0305	LAKE CHARLES METHANOL FACILITY	06/30/2016 ACT	Auxiliary Boilers and Superheaters	0		Nitrogen Oxides (NOx)	SCR	0.015	LBS/MM BTU	30 ROLLING AVG., EXCEPT SCR SU OR MAINT.
LA-0307	MAGNOLIA LNG FACILITY	03/21/2016 ACT	Regenerative Heaters	7.37	mm btu/hr	Nitrogen Oxides (NOx)	good combustion practices	0		
*LA-0315	G2G PLANT	05/23/2014 ACT	Reactor Charge Heater - 53B001	10.1	MMBTU/HR	Nitrogen Oxides (NOx)	Ultra-Low NOx Burners (ULNB)	0.4	LB/H	HOURLY MAXIMUM
*LA-0315	G2G PLANT	05/23/2014 ACT	Regeneraton Heater - 51B001	61	MMBTU/HR	Nitrogen Oxides (NOx)	Ultra-Low NOx Burners (ULNB)	2.44	LB/H	HOURLY MAXIMUM
*LA-0315	G2G PLANT	05/23/2014 ACT	Recycle Gas Heater - 51B002A	33	MMBTU/HR	Nitrogen Oxides (NOx)	Ultra-Low NOx Burners (ULNB)	1.3	LB/H	HOURLY MAXIMUM
*LA-0315	G2G PLANT	05/23/2014 ACT	Recycle Gas Heater - 51B002B	33	MMBTU/HR	Nitrogen Oxides (NOx)	Ultra-Low NOx Burners (ULNB)	1.3	LB/H	HOURLY MAXIMUM
*LA-0315	G2G PLANT	05/23/2014 ACT	Recycle Gas Heater - 51B002C	33	MMBTU/HR	Nitrogen Oxides (NOx)	Ultra-Low NOx Burners (ULNB)	1.3	LB/H	HOURLY MAXIMUM
*LA-0315	G2G PLANT	05/23/2014 ACT	Recycle Gas Heater - 51B002D	33	MMBTU/HR	Nitrogen Oxides (NOx)	Ultra-Low NOx Burners (ULNB)	1.3	LB/H	HOURLY MAXIMUM
*LA-0315	G2G PLANT	05/23/2014 ACT	Recycle Gas Heater - 51B002E	33	MMBTU/HR	Nitrogen Oxides (NOx)	Ultra-Low NOx Burners (ULNB)	1.3	LB/H	HOURLY MAXIMUM
MD-0041	CPV ST. CHARLES	04/23/2014 ACT	FUEL GAS HEATER	9.5	MMBTU/H	Nitrogen Oxides (NOx)	USE OF PIPELINE QUALITY NATURAL GAS AND GOOD COMBUSTION PRACTICES	0.035	LB/MMBTU	
*MD-0042	WILDCAT POINT GENERATION FACILITY	04/08/2014 ACT	DEW POINT HEATER	5	MMBTU/H	Nitrogen Oxides (NOx)	USE OF EFFICIENT DESIGN OF THE HEATER, EXCLUSIVE USE OF PIPELINE QUALITY NATURAL GA	0.049	LB/MMBTU	3-HOUR BLOCK AVERAGE
MD-0045	MATTAWOMAN ENERGY CENTER	11/13/2015 ACT	FUEL GAS HEATER	13.8	MMBTU/H	Nitrogen Oxides (NOx)	USE OF PIPELINE QUALITY NATURAL GAS AND GOOD COMBUSTION PRACTICES	0.035	LB/MMBTU	3-HOUR BLOCK AVERAGE
MI-0393	RAY COMPRESSOR STATION	10/14/2010 ACT	Pipeline heaters	18	MMBTU/H	Nitrogen Oxides (NOx)	Low NOx burners	0.9	LB/H	TEST METHOD
MI-0406	RENAISSANCE POWER LLC	11/01/2013 ACT	EU-HEATERSC: Natural gas-fired fuel heater used for heating natural gas prior	20	MMBTU/H	Nitrogen Oxides (NOx)	Good combustion practices	0.15	LB/MMBTU	TEST PROTOCOL
MI-0410	THETFORD GENERATING STATION	07/25/2013 ACT	FG-FUELHTRS: 2 natural gas fuel heaters, 12 MMBTU/H each	12	MMBTU/H heat input each fu	Nitrogen Oxides (NOx)	Low NOx burners	0.06	LB/MMBTU	30-D ROLL AVG EACH DAY IN OPERATION
MI-0412	HOLLAND BOARD OF PUBLIC WORKS - EAST 5TH ST	12/04/2013 ACT	Fuel pre-heater (EUFUELHTR)	3.7	MMBTU/H	Nitrogen Oxides (NOx)	Good combustion practices.	0.55	LB/H	TEST PROTOCOL
MI-0421	GRAYLING PARTICLEBOARD	08/26/2016 ACT	EUTOH (In FGTOH)--Thermal Oil Heater	34	MMBTU/H	Nitrogen Oxides (NOx)	Low NOx burners and good design and combustion practices.	0.05	LB/MMBTU	TEST PROTOCOL WILL SPECIFY AVG TIME
MI-0423	INDECK NILES, LLC	01/04/2017 ACT	FGFUELHTR (Two fuel pre-heaters identified as EUFUELHTR1 & EUFUELH	27	MMBTU/H	Nitrogen Oxides (NOx)	Good combustion practices.	2.65	LB/H	HOURLY; EACH UNIT
MI-0424	HOLLAND BOARD OF PUBLIC WORKS - EAST 5TH ST	12/05/2016 ACT	EUFUELHTR (Fuel pre-heater)	3.7	MMBTU/H	Nitrogen Oxides (NOx)	Good combustion practices.	0.55	LB/H	TEST PROTOCOL WILL SPECIFY AVG TIME.
MI-0435	BELLE RIVER COMBINED CYCLE POWER PLANT	07/16/2018 ACT	EUFUELHTR1: Natural gas fired fuel heater	20.8	MMBTU/H	Nitrogen Oxides (NOx)	Low NOx burner	0.75	LB/H	HOURLY
MI-0435	BELLE RIVER COMBINED CYCLE POWER PLANT	07/16/2018 ACT	EUFUELHTR2: Natural gas fired fuel heater	3.8	MMBTU/H	Nitrogen Oxides (NOx)	Low NOx burner	0.14	LB/H	HOURLY
*MI-0440	MICHIGAN STATE UNIVERSITY	05/22/2019 ACT	FGFUELHEATERS	25	MMBTU/H	Nitrogen Oxides (NOx)	Low NOx burners and good combustion practices.	0.05	LB/MMBTU	HOURLY; EACH HEATER
NV-0050	MGM MIRAGE	11/30/2009 ACT	WATER HEATERS - UNITS NY037 AND NY038 AT NEW YORK - NEW YORK	2	MMBTU/H	Nitrogen Oxides (NOx)	LOW-NOX BURNERS AND GOOD COMBUSTION PRACTICES	0.025	LB/MMBTU	
NY-0104	CPV VALLEY ENERGY CENTER	08/01/2013 ACT	Gas heater	0		Nitrogen Oxides (NOx)	Forced draft low NOx burner.	0.058	LB/MMBTU	1 H
OH-0355	GENERAL ELECTRIC AVIATION, EVENDALE PLANT	05/07/2013 ACT	4 Indirect-Fired Air Preheaters	0		Nitrogen Oxides (NOx)		0.14	LB/MMBTU	OPERATING AT 60% TO 100% CAPACITY
OH-0368	PALLAS NITROGEN LLC	04/19/2017 ACT	Startup Heater (B001)	100	MMBTU/H	Nitrogen Oxides (NOx)	Good combustion control (i.e., high temperatures, sufficient excess air, sufficient residence tim	10	LB/H	
OH-0368	PALLAS NITROGEN LLC	04/19/2017 ACT	Primary Reformer Heater (B002)	740	MMBTU/H	Nitrogen Oxides (NOx)	SNCR and low NOx burners	9.25	LB/H	PER 30 DAY ROLLING AVERAGE. SEE NOTES.
OH-0374	GUERNSEY POWER STATION LLC	10/23/2017 ACT	Fuel Gas Heaters (2 identical, P007 and P008)	15	MMBTU/H	Nitrogen Oxides (NOx)	Low-NOx gas burner	0.3	LB/H	
OH-0379	PETMIN USA INCORPORATED	02/06/2019 ACT	Process gas heater (P001)	218.9	MMBTU/H	Nitrogen Oxides (NOx)	Low NOX burners, use of natural gas and good combustion practices	14.01	LB/H	
OH-0379	PETMIN USA INCORPORATED	02/06/2019 ACT	Ladle Preheaters (P002, P003 and P004)	15	MMBTU/H	Nitrogen Oxides (NOx)	Good combustion practices and the use of natural gas	2.12	LB/H	
OK-0153	ROSE VALLEY PLANT	03/01/2013 ACT	REGENERATION HEATERS	5.61	MMBTUH	Nitrogen Oxides (NOx)	LOW-NOx BURNERS	0.045	LB/MMBTU	3-HR
OK-0153	ROSE VALLEY PLANT	03/01/2013 ACT	HOT OIL HEATER	17.4	MMBTUH	Nitrogen Oxides (NOx)	LOW-NOx BURNERS.	0.045	LB/MMBTU	3-HR
OK-0173	CMC STEEL OKLAHOMA	01/19/2016 ACT	Heaters (Gas-Fired)	0		Nitrogen Oxides (NOx)	Natural Gas Fuel	0.1	LB/MMBTU	
PA-0296	BERKS HOLLOW ENERGY ASSOC LLC/ONTELAUNEE	12/17/2013 ACT	Fuel Preheater	8.5	MMBTU/H	Nitrogen Oxides (NOx)		0.035	LB/MMBTU	
PA-0310	CPV FAIRVIEW ENERGY CENTER	09/02/2016 ACT	Dew point heater 13.8	0		Nitrogen Oxides (NOx)		0.011	LB/MMBTU	
PA-0310	CPV FAIRVIEW ENERGY CENTER	09/02/2016 ACT	Dew point heater 3.2	3.2	MMBtu/hr	Nitrogen Oxides (NOx)		0.035	LB/MMBTU	
PA-0311	MOXIE FREEDOM GENERATION PLANT	09/01/2015 ACT	Fuel Gas Heater	0		Nitrogen Oxides (NOx)		0.011	LB/MMBTU	
*PA-0316	RENOVO ENERGY CENTER, LLC	01/26/2018 ACT	Water Bath Heater	15	MMBtu	Nitrogen Oxides (NOx)		0.01	LB	MMBTU
TX-0656	GAS TO GASOLINE PLANT	05/16/2014 ACT	Heaters	45	MMBTU/H	Nitrogen Oxides (NOx)	ultra low NOx burners	0.036	LB/MMBTU	
TX-0656	GAS TO GASOLINE PLANT	05/16/2014 ACT	heaters (5)	24.3	MMBTU/H	Nitrogen Oxides (NOx)	ultra low NOx burners	0.036	LB/MMBTU	
TX-0663	JACKSON COUNTY GAS PLANT	05/25/2012 ACT	Heaters	17	MMBTU/H	Nitrogen Oxides (NOx)		0		
TX-0663	JACKSON COUNTY GAS PLANT	05/25/2012 ACT	Heaters	48	MMBTU/H	Nitrogen Oxides (NOx)	Flue Gas Recirculation	7.62	TON	YEAR
TX-0663	JACKSON COUNTY GAS PLANT	05/25/2012 ACT	Heaters	10	MMBTU/H	Nitrogen Oxides (NOx)	Flue Gas Recirculation	0		
TX-0663	JACKSON COUNTY GAS PLANT	05/25/2012 ACT	Heaters	3	MMBTU/H	Nitrogen Oxides (NOx)	Flue Gas recirculation	0		
TX-0680	SONORA GAS PLANT	06/14/2013 ACT	Heaters	10	MMBTU/H	Nitrogen Oxides (NOx)	low-NOx burners	0.01	LB/MMBTU	
TX-0680	SONORA GAS PLANT	06/14/2013 ACT	2 Heaters	5	MMBTU/H	Nitrogen Oxides (NOx)		0.1	LB/MMBTU	
TX-0691	PH ROBINSON ELECTRIC GENERATING STATION	05/20/2014 ACT	fuel gas heater	18	MMBTU/H	Nitrogen Oxides (NOx)		0.1	LB/MMBTU	
TX-0693	ANTELOPE ELK ENERGY CENTER	04/22/2014 ACT	heater	5.5	MMBTU/H	Nitrogen Oxides (NOx)		0.036	LB/MMBTU	1 HOUR
TX-0694	INDECK WHARTON ENERGY CENTER	02/02/2015 ACT	heater	3	MMBTU/H	Nitrogen Oxides (NOx)		0.1	LB/MMBTU	1 HOUR
TX-0755	RAMSEY GAS PLANT	05/21/2015 ACT	Hot Oil Heaters and Regeneration Heaters	60	MMBTU/H	Nitrogen Oxides (NOx)	low NOx burners	0.045	LB/MMBTU	
TX-0845	ARKEMA BEAUMONT PLANT	08/24/2018 ACT	HEATERS	31	BTU/HR	Nitrogen Oxides (NOx)	LOW NOX BURNERS, CLEAN FUEL	0.04	LB/MMBTU	
*WI-0291	GRAYMONT WESTERN LIME-EDEN	01/28/2019 ACT	P05 Natural Gas Fired Line Heater	1.5	mmBTU/hr	Nitrogen Oxides (NOx)	Good Combustion Practices	0.1	LB/MMBTU	
WY-0067	ECHO SPRINGS GAS PLANT	04/01/2009 ACT	HOT OIL HEATER 53B	84	MMBTU/H	Nitrogen Oxides (NOx)	LOW NOX BURNERS WITH FLUE GAS RECIRCULATION	0.03	LB/MMBTU	
WY-0070	CHEYENNE PRAIRIE GENERATING STATION	08/28/2012 ACT	Inlet Air Heater (EP06)	16.1	MMBTU/H	Nitrogen Oxides (NOx)	Ultra Low-NOx Burners	0.012	LB/MMBTU	3-HOUR AVERAGE
WY-0070	CHEYENNE PRAIRIE GENERATING STATION	08/28/2012 ACT	Inlet Air Heater (EP07)	16.1	MMBTU/H	Nitrogen Oxides (NOx)	Ultra Low NOx Burners	0.012	LB/MMBTU	3-HOUR AVERAGE
WY-0070	CHEYENNE PRAIRIE GENERATING STATION	08/28/2012 ACT	Inlet Air Heater (EP08)	16.1	MMBTU/H	Nitrogen Oxides (NOx)	Ultra Low NOx Burners	0.012	LB/MMBTU	3-HOUR AVERAGE
WY-0070	CHEYENNE PRAIRIE GENERATING STATION	08/28/2012 ACT	Inlet Air Heater (EP09)	16.1	MMBTU/H	Nitrogen Oxides (NOx)	Ultra Low NOx Burners	0.012	LB/MMBTU	3-HOUR AVERAGE
WY-0070	CHEYENNE PRAIRIE GENERATING STATION	08/28/2012 ACT	Inlet Air Heater (EP10)	16.1	MMBTU/H	Nitrogen Oxides (NOx)	Ultra Low NOx Burners	0.012	LB/MMBTU	3-HOUR AVERAGE
WY-0070	CHEYENNE PRAIRIE GENERATING STATION	08/28/2012 ACT	Inlet Air Heater (EP11)	16.1	MMBTU/H	Nitrogen Oxides (NOx)	Ultra Low NOx Burners	0.012	LB/MMBTU	3-HOUR AVERAGE

RBLC SUMMARY FOR HEATERS - CO

RBLCID	FACILITY_NAME	PERMIT_ISSUANCE_DATE	PROCESS_NAME	THROUGHPUT	THROUGHPUT_UNIT	POLLUTANT	CONTROL_METHOD_DESCRIPTION	EMISSION_LIMIT_1	EMISSION_LIMIT_1_UNIT	EMISSION_LIMIT_1_AVG_TIME_CONDITION
AK-0083	KENAI NITROGEN OPERATIONS	01/06/2015 ACT	Startup Heater	101	MMBTU/H	Carbon Monoxide	Limited Use (200 hr/yr)	0.082	LB/MMBTU	
AR-0140	BIG RIVER STEEL LLC	09/18/2013 ACT	SMALL HEATERS AND DRYERS SN-05 THROUGH 19	0		Carbon Monoxide	COMBUSTION OF NATURAL GAS AND GOOD COMBUSTION PRACTICE	0.0824	LB/MMBTU	
AR-0155	BIG RIVER STEEL LLC	11/07/2018 ACT	SMALL HEATERS AND DRYERS SN-05 THROUGH SN-11, SN-16, AND SN-17	0		Carbon Monoxide	COMBUSTION OF NATURAL GAS AND GOOD COMBUSTION PRACTICE	0.0824	LB/MMBTU	
AR-0155	BIG RIVER STEEL LLC	11/07/2018 ACT	PREHEATER, GALVANIZING LINE SN-28	78.2	MMBTU/HR	Carbon Monoxide	COMBUSTION OF NATURAL GAS AND GOOD COMBUSTION PRACTICE	0.0824	LB/MMBTU	
*AR-0159	BIG RIVER STEEL LLC	04/05/2019 ACT	SMALL HEATERS AND DRYERS SN-16 through SN-19B	0		Carbon Monoxide	COMBUSTION OF NATURAL GAS AND GOOD COMBUSTION PRACTICE	0.0824	LB/MMBTU	
*AR-0159	BIG RIVER STEEL LLC	04/05/2019 ACT	SMALL HEATERS AND DRYERS SN-10 through SN-13	0		Carbon Monoxide	COMBUSTION OF NATURAL GAS AND GOOD COMBUSTION PRACTICE	0.0824	LB/MMBTU	
*AR-0159	BIG RIVER STEEL LLC	04/05/2019 ACT	PREHEATERS, GALVANIZING LINE SN-28 and SN-29	0		Carbon Monoxide	COMBUSTION OF NATURAL GAS AND GOOD COMBUSTION PRACTICE	0.0824	LB/MMBTU	
*AR-0159	BIG RIVER STEEL LLC	04/05/2019 ACT	COLD MILL SPACE HEATERS	0		Carbon Monoxide	Combustion of Natural gas and Good Combustion Practice	0.0824	LB/MMBTU	
CA-1191	VICTORVILLE 2 HYBRID POWER PROJECT	03/11/2010 ACT	AUXILIARY HEATER	40	MMBTU/H	Carbon Monoxide	OPERATIONAL RESTRICTION OF 1000 HR/YR	50	PPMVD	1-HR AVG, @ 3% O2
IA-0106	CF INDUSTRIES NITROGEN, LLC - PORT NEAL NITRO	07/12/2013 ACT	Startup Heater	58.8	MMBTU/H	Carbon Monoxide	good operating practices & use of natural gas	0.0194	LB/MMBTU	AVERAGE OF THREE (3) STACK TEST RUNS
IA-0107	MARSHALLTOWN GENERATING STATION	04/14/2014 ACT	dew point heater	13.32	mm Btu/hr	Carbon Monoxide		0.041	LB/MMBTU	3-HOUR AVERAGE
IL-0129	CPV THREE RIVERS ENERGY CENTER	07/30/2018 ACT	Fuel Heater	12.8	mm Btu/hr	Carbon Monoxide	Good combustion practice	0.08	LB/HR	
*IL-0130	JACKSON ENERGY CENTER	12/31/2018 ACT	Fuel Heater	13	mm Btu/hour	Carbon Monoxide	Good combustion practice	0.08	LB/MMBTU	
IN-0263	MIDWEST FERTILIZER COMPANY LLC	03/23/2017 ACT	STARTUP HEATER EU-002	70	MMBTU/HR	Carbon Monoxide	GOOD COMBUSTION PRACTICES	2.556	LB/H	3 HOUR AVERAGE
IN-0285	WHITING CLEAN ENERGY, INC.	08/02/2017 ACT	Space Heaters	0		Carbon Monoxide		0.038	LB/MMBTU	WHEN COMBUSTING NATURAL GAS
*KS-0030	MID-KANSAS ELECTRIC COMPANY, LLC - RUBART ST	03/31/2016 ACT	Indirect fuel-gas heater	2	mmBTU/hr	Carbon Monoxide		0.16	LB/H	EXCLUDES STARTUP, SHUTDOWN & MALFUNCTION
LA-0231	LAKE CHARLES GASIFICATION FACILITY	06/22/2009 ACT	SHIFT REACTOR STARTUP HEATER	34.2	MMBTU/H	Carbon Monoxide	GOOD DESIGN AND PROPER OPERATION	2.82	LB/H	MAXIMUM
LA-0231	LAKE CHARLES GASIFICATION FACILITY	06/22/2009 ACT	GASIFIER STARTUP PREHEATER BURNERS (5)	35	MMBTU/H	Carbon Monoxide	GOOD DESIGN AND PROPER OPERATION	1.96	LB/H	MAXIMUM (EACH)
LA-0231	LAKE CHARLES GASIFICATION FACILITY	06/22/2009 ACT	STEAM SUPERHEATERS (A & B)	415	MMBTU/H	Carbon Monoxide	GOOD DESIGN AND PROPER OPERATION	14.94	LB/H	TOTAL
LA-0231	LAKE CHARLES GASIFICATION FACILITY	06/22/2009 ACT	METHANATION STARTUP HEATERS	56.9	MMBTU/H	Carbon Monoxide	GOOD DESIGN AND PROPER OPERATION	4.69	LB/H	MAXIMUM
LA-0272	AMMONIA PRODUCTION FACILITY	03/27/2013 ACT	AMMONIA START-UP HEATER (102-B)	59.4	MM BTU/HR	Carbon Monoxide	GOOD COMBUSTION PRACTICES: PROPER DESIGN OF BURNER AND FIREBOX COMPO	2.97	LB/H	HOURLY MAXIMUM
LA-0305	LAKE CHARLES METHANOL FACILITY	06/30/2016 ACT	Auxiliary Boilers and Superheaters	0		Carbon Monoxide	good engineering design and good combustion practices	0		
LA-0307	MAGNOLIA LNG FACILITY	03/21/2016 ACT	Regenerative Heaters	7.37	mm btu/hr	Carbon Monoxide	good combustion practices	0		
LA-0311	DONALDSONVILLE NITROGEN COMPLEX	07/15/2013 ACT	No. 6 Ammonia Plant Start-up Heater (4-13, EQT 158)	94.5	MM Btu/hr	Carbon Monoxide	Good combustion practices; proper engineering design	7.78	LB/HR	HOURLY MAXIMUM
*LA-0315	G2G PLANT	05/23/2014 ACT	Reactor Charge Heater - 53B001	10.1	MMBTU/HR	Carbon Monoxide	Combustion controls (proper burner design and operation using natural gas)	0.83	LB/H	HOURLY MAXIMUM
*LA-0315	G2G PLANT	05/23/2014 ACT	Regeneraton Heater - 51B001	61	MMBTU/HR	Carbon Monoxide	Combustion controls (proper burner design and operation using natural gas)	5	LB/H	HOURLY MAXIMUM
*LA-0315	G2G PLANT	05/23/2014 ACT	Recycle Gas Heater - 51B002A	33	MMBTU/HR	Carbon Monoxide	Combustion controls (proper burner design and operation using natural gas)	2.67	LB/H	HOURLY MAXIMUM
*LA-0315	G2G PLANT	05/23/2014 ACT	Recycle Gas Heater - 51B002B	33	MMBTU/HR	Carbon Monoxide	Combustion controls (proper burner design and operation using natural gas)	2.67	LB/H	HOURLY MAXIMUM
*LA-0315	G2G PLANT	05/23/2014 ACT	Recycle Gas Heater - 51B002C	33	MMBTU/HR	Carbon Monoxide	Combustion controls (proper burner design and operation using natural gas)	2.67	LB/H	HOURLY MAXIMUM
*LA-0315	G2G PLANT	05/23/2014 ACT	Recycle Gas Heater - 51B002D	33	MMBTU/HR	Carbon Monoxide	Combustion controls (proper burner design and operation using natural gas)	2.67	LB/H	HOURLY MAXIMUM
*LA-0315	G2G PLANT	05/23/2014 ACT	Recycle Gas Heater - 51B002E	33	MMBTU/HR	Carbon Monoxide	Combustion controls (proper burner design and operation using natural gas)	2.67	LB/H	HOURLY MAXIMUM
MD-0041	CPV ST. CHARLES	04/23/2014 ACT	FUEL GAS HEATER	9.5	MMBTU/H	Carbon Monoxide	GOOD COMBUSTION PRACTICES	0.08	LB/MMBTU	
*MD-0042	WILDCAT POINT GENERATION FACILITY	04/08/2014 ACT	DEW POINT HEATER	5	MMBTU/H	Carbon Monoxide	USE OF EFFICIENT DESIGN OF THE HEATER, EXCLUSIVE USE OF PIPELINE QUALITY NA	0.083	LB/MMBTU	3-HOUR BLOCK AVERAGE
MD-0045	MATTAWOMAN ENERGY CENTER	11/13/2015 ACT	FUEL GAS HEATER	13.8	MMBTU/H	Carbon Monoxide	GOOD COMBUSTION PRACTICES	0.021	LB/MMBTU	3-HOUR BLOCK AVERAGE
MI-0406	RENAISSANCE POWER LLC	11/01/2013 ACT	EU-HEATERSC: Natural gas-fired fuel heater used for heating natural gas prior	20	MMBTU/H	Carbon Monoxide	Good combustion practices	0.09	LB/MMBTU	TEST PROTOCOL
MI-0410	THETFORD GENERATING STATION	07/25/2013 ACT	FG-FUELHTRS: 2 natural gas fuel heaters, 12 MMBTU/H each	12	MMBTU/H heat input e	Carbon Monoxide	Efficient combustion	0.11	LB/MMBTU	TEST PROTOCOL WILL SPECIFY AVG. TIME.
MI-0412	HOLLAND BOARD OF PUBLIC WORKS - EAST 5TH STR	12/04/2013 ACT	Fuel pre-heater (EUFUELHTR)	3.7	MMBTU/H	Carbon Monoxide	Good combustion practices	0.41	LB/H	TEST PROTOCOL
MI-0421	GRAYLING PARTICLEBOARD	08/26/2016 ACT	EUTOH (In FGTOH)--Thermal Oil Heater	34	MMBTU/H	Carbon Monoxide	Good design and operation	0.082	LB/MMBTU	TEST PROTOCOL WILL SPECIFY AVG TIME.
MI-0423	INDECK NILES, LLC	01/04/2017 ACT	FGFUELHTR (Two fuel pre-heaters identified as EUFUELHTR1 & EUFUELH	27	MMBTU/H	Carbon Monoxide	Good combustion practices.	2.22	LB/H	HOURLY; EACH UNIT
MI-0424	HOLLAND BOARD OF PUBLIC WORKS - EAST 5TH STR	12/05/2016 ACT	EUFUELHTR (Fuel pre-heater)	3.7	MMBTU/H	Carbon Monoxide	Good combustion practices.	0.41	LB/H	TEST PROTOCOL WILL SPECIFY AVG TIME
MI-0435	BELLE RIVER COMBINED CYCLE POWER PLANT	07/16/2018 ACT	EUFUELHTR1: Natural gas fired fuel heater	20.8	MMBTU/H	Carbon Monoxide	Good combustion controls.	0.77	LB/H	HOURLY
MI-0435	BELLE RIVER COMBINED CYCLE POWER PLANT	07/16/2018 ACT	EUFUELHTR2: Natural gas fired fuel heater	3.8	MMBTU/H	Carbon Monoxide	Good combustion controls	0.14	LB/H	HOURLY
*MI-0440	MICHIGAN STATE UNIVERSITY	05/22/2019 ACT	FGFUELHEATERS	25	MMBTU/H	Carbon Monoxide	Good combustion practices.	0.08	LB/MMBTU	HOURLY; EACH HEATER
MS-0092	EMBERCLEAR GTL MS	05/08/2014 ACT	Regeneration Heater, methanol to gasoline	13	MMBTU/H	Carbon Monoxide		0.08	LB/MMBTU	3-HR AVERAGE
MS-0092	EMBERCLEAR GTL MS	05/08/2014 ACT	Reactor Heater, 5	12	MMBTU/H	Carbon Monoxide		0.08	LB/MMBTU	3-HR AVERAGE
NV-0050	MGM MIRAGE	11/30/2009 ACT	WATER HEATERS - UNITS NY037 AND NY038 AT NEW YORK - NEW YORK	2	MMBTU/H	Carbon Monoxide	LIMITING THE FUEL TO NATURAL GAS ONLY AND GOOD COMBUSTION PRACTICES	0.035	LB/MMBTU	
NY-0104	CPV VALLEY ENERGY CENTER	08/01/2013 ACT	Gas heater	0		Carbon Monoxide	Good combustion practice.	0.084	LB/MMBTU	1 H
OH-0355	GENERAL ELECTRIC AVIATION, EVENDALE PLANT	05/07/2013 ACT	4 Indirect-Fired Air Preheaters	0		Carbon Monoxide		0.15	LB/MMBTU	
OH-0368	PALLAS NITROGEN LLC	04/19/2017 ACT	Startup Heater (B001)	100	MMBTU/H	Carbon Monoxide	good combustion control (i.e., high temperatures, sufficient excess air, sufficient res	8.24	LB/H	
OH-0368	PALLAS NITROGEN LLC	04/19/2017 ACT	Primary Reformer Heater (B002)	740	MMBTU/H	Carbon Monoxide	Good combustion control (i.e., high temperatures, sufficient excess air, sufficient res	14.4	LB/H	
OH-0374	GUERNSEY POWER STATION LLC	10/23/2017 ACT	Fuel Gas Heaters (2 identical, P007 and P008)	15	MMBTU/H	Carbon Monoxide	Combustion control	0.83	LB/H	
OK-0153	ROSE VALLEY PLANT	03/01/2013 ACT	REGENERATION HEATERS	5.61	MMBTUH	Carbon Monoxide	GOOD COMBUSTION PRACTICES.	0.0824	LB/MMBTU	3-HR
OK-0153	ROSE VALLEY PLANT	03/01/2013 ACT	HOT OIL HEATER	17.4	MMBTUH	Carbon Monoxide	Efficient design and combustion.	0.0824	LB/MMBTU	3-HR
OK-0173	CMC STEEL OKLAHOMA	01/19/2016 ACT	Heaters (Gas-Fired)	0		Carbon Monoxide	Natural Gas Fuel.	0.084	LB/MMBTU	
PA-0296	BERKS HOLLOW ENERGY ASSOC LLC/ONTELAUNEE	12/17/2013 ACT	Fuel Preheater	8.5	MMBTU/H	Carbon Monoxide		0.05	LB/MMBTU	
PA-0310	CPV FAIRVIEW ENERGY CENTER	09/02/2016 ACT	Dew point heater 13.8	0		Carbon Monoxide		0.08	LB/MMBTU	
PA-0310	CPV FAIRVIEW ENERGY CENTER	09/02/2016 ACT	Dew point heater 3.2	3.2	MMBtu/hr	Carbon Monoxide		0.08	LB/MMBTU	
PA-0311	MOXIE FREEDOM GENERATION PLANT	09/01/2015 ACT	Fuel Gas Heater	0		Carbon Monoxide		0.037	LB/MMBTU	
TX-0656	GAS TO GASOLINE PLANT	05/16/2014 ACT	Heaters	45	MMBTU/H	Carbon Monoxide	clean fuel and good combustion practices	50	PPM	ANNUAL
TX-0656	GAS TO GASOLINE PLANT	05/16/2014 ACT	heaters (5)	24.3	MMBTU/H	Carbon Monoxide	clean fuel and good combustion practices	50	PPM	ANNUAL
TX-0663	JACKSON COUNTY GAS PLANT	05/25/2012 ACT	Heaters	17	MMBTU/H	Carbon Monoxide	Good Combustion Practices	0		
TX-0663	JACKSON COUNTY GAS PLANT	05/25/2012 ACT	Heaters	48	MMBTU/H	Carbon Monoxide	Best combustion practices	17.39	TON	YEAR
TX-0663	JACKSON COUNTY GAS PLANT	05/25/2012 ACT	Heaters	10	MMBTU/H	Carbon Monoxide	Good combustion Practices	0		
TX-0663	JACKSON COUNTY GAS PLANT	05/25/2012 ACT	Heaters	3	MMBTU/H	Carbon Monoxide	Good Combustion Practices	0		
TX-0680	SONORA GAS PLANT	06/14/2013 ACT	Heater	10	MMBTU/H	Carbon Monoxide		100	PPMVD	@3% O2
TX-0680	SONORA GAS PLANT	06/14/2013 ACT	2 Heaters	5	MMBTU/H	Carbon Monoxide		100	PPMVD	@3% O2
TX-0691	PH ROBINSON ELECTRIC GENERATING STATION	05/20/2014 ACT	fuel gas heater	18	MMBTU/H	Carbon Monoxide		0.054	LB/MMBTU	
TX-0693	ANTELOPE ELK ENERGY CENTER	04/22/2014 ACT	heater	5.5	MMBTU/H	Carbon Monoxide		0.08	LB/MMBTU	1 HOUR
TX-0694	INDECK WHARTON ENERGY CENTER	02/02/2015 ACT	heater	3	MMBTU/H	Carbon Monoxide		0.04	LB/MMBTU	1 HOUR
TX-0755	RAMSEY GAS PLANT	05/21/2015 ACT	Hot Oil Heaters and Regeneration Heaters	60	MMBTU/H	Carbon Monoxide	Good combustion practices and firing of residue gas with low carbon content	50	PPMVD @ 3% O2	
*WI-0291	GRAYMONT WESTERN LIME-EDEN	01/28/2019 ACT	P05 Natural Gas Fired Line Heater	1.5	mmBTU/hr	Carbon Monoxide	Good Combustion Practices	0.082	LB/MMBTU	
WY-0067	ECHO SPRINGS GAS PLANT	04/01/2009 ACT	HOT OIL HEATER S38	84	MMBTU/H	Carbon Monoxide	GOOD COMBUSTION PRACTICES	0.02	LB/MMBTU	
WY-0070	CHEYENNE PRAIRIE GENERATING STATION	08/28/2012 ACT	Inlet Air Heater (EP06)	16.1	MMBTU/H	Carbon Monoxide	good combustion practices	0.08	LB/MMBTU	3-HOUR AVERAGE
WY-0070	CHEYENNE PRAIRIE GENERATING STATION	08/28/2012 ACT	Inlet Air Heater (EP07)	16.1	MMBTU/H	Carbon Monoxide	good combustion practices	0.08	LB/MMBTU	3-HOUR AVERAGE
WY-0070	CHEYENNE PRAIRIE GENERATING STATION	08/28/2012 ACT	Inlet Air Heater (EP08)	16.1	MMBTU/H	Carbon Monoxide	good combustion practices	0.08	LB/MMBTU	3-HOUR AVERAGE
WY-0070	CHEYENNE PRAIRIE GENERATING STATION	08/28/2012 ACT	Inlet Air Heater (EP09)	16.1	MMBTU/H	Carbon Monoxide	good combustion practices	0.08	LB/MMBTU	3-HOUR AVERAGE
WY-0070	CHEYENNE PRAIRIE GENERATING STATION	08/28/2012 ACT	Inlet Air Heater (EP10)	16.1	MMBTU/H	Carbon Monoxide	good combustion practices	0.08	LB/MMBTU	3-HOUR AVERAGE
WY-0070	CHEYENNE PRAIRIE GENERATING STATION	08/28/2012 ACT	Inlet Air Heater (EP11)	16.1	MMBTU/H	Carbon Monoxide	good combustion practices	0.08	LB/MMBTU	3-HOUR AVERAGE

RBLC SUMMARY FOR HEATERS - VOC										
RBLCID	FACILITY_NAME	PERMIT_ISSUANCE_DATE	PROCESS_NAME	THROUGHPUT	THROUGHPUT_UNIT	POLLUTANT	CONTROL_METHOD_DESCRIPTION	EMISSION_LIMIT_1	EMISSION_LIMIT_1_UNIT	EMISSION_LIMIT_1_AVG_TIME_CONDITION
AK-0083	KENAI NITROGEN OPERATIONS	01/06/2015 ACT	Startup Heater	101	MMBTU/H	Volatile Organic Compounds (VOC)	Limited Use (200 hr/yr)	0.0054	LB/MMBTU	
AR-0140	BIG RIVER STEEL LLC	09/18/2013 ACT	SMALL HEATERS AND DRYERS SN-05 THROUGH 19	0		Volatile Organic Compounds (VOC)	COMBUSTION OF NATURAL GAS AND GOOD COMBUSTION PRACTICE	0.0054	LB/MMBTU	
AR-0155	BIG RIVER STEEL LLC	11/07/2018 ACT	SMALL HEATERS AND DRYERS SN-05 THROUGH SN-11, SN-16, AND SN-17	0		Volatile Organic Compounds (VOC)	COMBUSTION OF NATURAL GAS AND GOOD COMBUSTION PRACTICE	0.0054	LB/MMBTU	
AR-0155	BIG RIVER STEEL LLC	11/07/2018 ACT	PREHEATER, GALVANIZING LINE SN-28	78.2	MMBTU/HR	Volatile Organic Compounds (VOC)	COMBUSTION OF NATURAL GAS AND GOOD COMBUSTION PRACTICE	0.0054	LB/MMBTU	
*AR-0159	BIG RIVER STEEL LLC	04/05/2019 ACT	SMALL HEATERS AND DRYERS SN-16 through SN-19B	0		Volatile Organic Compounds (VOC)	COMBUSTION OF NATURAL GAS AND GOOD COMBUSTION PRACTICE	0.0054	LB/MMBTU	
*AR-0159	BIG RIVER STEEL LLC	04/05/2019 ACT	SMALL HEATERS AND DRYERS SN-10 through SN-13	0		Volatile Organic Compounds (VOC)	COMBUSTION OF NATURAL GAS AND GOOD COMBUSTION PRACTICE	0.0054	LB/MMBTU	
*AR-0159	BIG RIVER STEEL LLC	04/05/2019 ACT	PREHEATERS, GALVANIZING LINE SN-28 and SN-29	0		Volatile Organic Compounds (VOC)	COMBUSTION OF NATURAL GAS AND GOOD COMBUSTION PRACTICE	0.0054	LB/MMBTU	
*AR-0159	BIG RIVER STEEL LLC	04/05/2019 ACT	COLD MILL SPACE HEATERS	0		Volatile Organic Compounds (VOC)	Combustion of Natural gas and Good Combustion Practice	0.0054	LB/MMBTU	
FL-0364	SEMINOLE GENERATING STATION	03/21/2018 ACT	Two natural gas heaters (< 10 MMBtu/hr each)	9.9	MMBtu/hr	Volatile Organic Compounds (VOC)		0.005	LB/MMBTU	
IA-0106	CF INDUSTRIES NITROGEN, LLC - PORT NEAL NITRO	07/12/2013 ACT	Startup Heater	58.8	MMBTU/H	Volatile Organic Compounds (VOC)	good operating practices & use of natural gas	0.0014	LB/MMBTU	AVERAGE OF THREE (3) STACK TEST RUNS
IN-0263	MIDWEST FERTILIZER COMPANY LLC	03/23/2017 ACT	STARTUP HEATER EU-002	70	MMBTU/HR	Volatile Organic Compounds (VOC)	GOOD COMBUSTION PRACTICES	0.378	LB/H	3 HOUR AVERAGE
IN-0285	WHITING CLEAN ENERGY, INC.	08/02/2017 ACT	Space Heaters	0		Volatile Organic Compounds (VOC)		0.0053	LB/MMBTU	WHEN COMBUSTING NATURAL GAS
*KS-0030	MID-KANSAS ELECTRIC COMPANY, LLC - RUBART ST	03/31/2016 ACT	Indirect fuel-gas heater	2	mmBTU/hr	Volatile Organic Compounds (VOC)		0.011	LB/H	EXCLUDES STARTUP, SHUTDOWN & MALFUNCTION
LA-0272	AMMONIA PRODUCTION FACILITY	03/27/2013 ACT	AMMONIA START-UP HEATER (102-B)	59.4	MM BTU/HR	Volatile Organic Compounds (VOC)	GOOD COMBUSTION PRACTICES: PROPER DESIGN OF BURNER AND FIREBOX COMPONENTS; MA	0.38	LB/H	HOURLY MAXIMUM
LA-0307	MAGNOLIA LNG FACILITY	03/21/2016 ACT	Regenerative Heaters	7.37	mm btu/hr	Volatile Organic Compounds (VOC)	good combustion practices	0		
*LA-0315	G2G PLANT	05/23/2014 ACT	Reactor Charge Heater - 53B001	10.1	MMBTU/HR	Volatile Organic Compounds (VOC)	Combustion controls (proper burner design and operation using natural gas)	0.05	LB/H	HOURLY MAXIMUM
*LA-0315	G2G PLANT	05/23/2014 ACT	Regeneraton Heater - 51B001	61	MMBTU/HR	Volatile Organic Compounds (VOC)	Combustion controls (proper burner design and operation using natural gas)	0.33	LB/H	HOURLY MAXIMUM
*LA-0315	G2G PLANT	05/23/2014 ACT	Recycle Gas Heater - 51B002A	33	MMBTU/HR	Volatile Organic Compounds (VOC)	Combustion controls (proper burner design and operation using natural gas)	0.18	LB/H	HOURLY MAXIMUM
*LA-0315	G2G PLANT	05/23/2014 ACT	Recycle Gas Heater - 51B002B	33	MMBTU/HR	Volatile Organic Compounds (VOC)	Combustion controls (proper burner design and operation using natural gas)	0.18	LB/H	HOURLY MAXIMUM
*LA-0315	G2G PLANT	05/23/2014 ACT	Recycle Gas Heater - 51B002C	33	MMBTU/HR	Volatile Organic Compounds (VOC)	Combustion controls (proper burner design and operation using natural gas)	0.18	LB/H	HOURLY MAXIMUM
*LA-0315	G2G PLANT	05/23/2014 ACT	Recycle Gas Heater - 51B002D	33	MMBTU/HR	Volatile Organic Compounds (VOC)	Combustion controls (proper burner design and operation using natural gas)	0.18	LB/H	HOURLY MAXIMUM
*LA-0315	G2G PLANT	05/23/2014 ACT	Recycle Gas Heater - 51B002E	33	MMBTU/HR	Volatile Organic Compounds (VOC)	Combustion controls (proper burner design and operation using natural gas)	0.18	LB/H	HOURLY MAXIMUM
MD-0041	CPV ST. CHARLES	04/23/2014 ACT	FUEL GAS HEATER	9.5	MMBTU/H	Volatile Organic Compounds (VOC)	EXCLUSIVE USE OF NATURAL GAS AND GOOD COMBUSTION PRACTICES	0.005	LB/MMBTU	
*MD-0042	WILDCAT POINT GENERATION FACILITY	04/08/2014 ACT	DEW POINT HEATER	5	MMBTU/H	Volatile Organic Compounds (VOC)	USE OF EFFICIENT DESIGN OF THE HEATER, EXCLUSIVE USE OF PIPELINE QUALITY NATURAL GAS	0.005	LB/MMBTU	3-HOUR BLOCK AVERAGE
MD-0045	MATTAWOMAN ENERGY CENTER	11/13/2015 ACT	FUEL GAS HEATER	13.8	MMBTU/H	Volatile Organic Compounds (VOC)	EXCLUSIVE USE OF PIPELINE QUALITY NATURAL GAS AND GOOD COMBUSTION PRACTICES	0.0054	LB/MMBTU	3-HOUR BLOCK AVERAGE
MI-0393	RAY COMPRESSOR STATION	10/14/2010 ACT	Pipeline heaters	18	MMBTU/H	Volatile Organic Compounds (VOC)		0.9	LB/H	TEST METHOD
MI-0406	RENAISSANCE POWER LLC	11/01/2013 ACT	EU-HEATERSC: Natural gas-fired fuel heater used for heating natural gas prio	20	MMBTU/H	Volatile Organic Compounds (VOC)	Good combustion practices	0.05	LB/MMBTU	TEST PROTOCOL
MI-0410	THETFORD GENERATING STATION	07/25/2013 ACT	FG-FUELHTRS: 2 natural gas fuel heaters, 12 MMBTU/H each	12	MMBTU/H heat input	Volatile Organic Compounds (VOC)	Efficient combustion; natural gas fuel.	0.008	LB/MMBTU	TEST PROTOCOL WILL SPECIFY AVG. TIME
MI-0412	HOLLAND BOARD OF PUBLIC WORKS - EAST 5TH ST	12/04/2013 ACT	Fuel pre-heater (EUFUELHTR)	3.7	MMBTU/H	Volatile Organic Compounds (VOC)	Good combustion practices	0.03	LB/H	TEST PROTOCOL
MI-0421	GRAYLING PARTICLEBOARD	08/26/2016 ACT	EUTOH (In FGTOH)--Thermal Oil Heater	34	MMBTU/H	Volatile Organic Compounds (VOC)	Good design and operating/combustion practices.	0.0054	LB/MMBTU	TEST PROTOCOL WILL SPECIFY AVG TIME
MI-0423	INDECK NILES, LLC	01/04/2017 ACT	FGFUELHTR (Two fuel pre-heaters identified as EUFUELHTR1 & EUFUEL	27	MMBTU/H	Volatile Organic Compounds (VOC)	Good combustion practices.	0.15	LB/H	HOURLY; EACH FUEL HEATER
MI-0424	HOLLAND BOARD OF PUBLIC WORKS - EAST 5TH ST	12/05/2016 ACT	EUFUELHTR (Fuel pre-heater)	3.7	MMBTU/H	Volatile Organic Compounds (VOC)	Good combustion practices.	0.03	LB/H	TEST PROTOCOL WILL SPECIFY AVG TIME
MI-0435	BELLE RIVER COMBINED CYCLE POWER PLANT	07/16/2018 ACT	EUFUELHTR1: Natural gas fired fuel heater	20.8	MMBTU/H	Volatile Organic Compounds (VOC)	Good combustion controls	0.17	LB/H	HOURLY
MI-0435	BELLE RIVER COMBINED CYCLE POWER PLANT	07/16/2018 ACT	EUFUELHTR2: Natural gas fired fuel heater	3.8	MMBTU/H	Volatile Organic Compounds (VOC)	Good combustion controls.	0.03	LB/H	HOURLY
*MI-0440	MICHIGAN STATE UNIVERSITY	05/22/2019 ACT	FGFUELHEATERS	25	MMBTU/H	Volatile Organic Compounds (VOC)	Good combustion practices	0.005	LB/MMBTU	HOURLY; EACH UNIT
MS-0092	EMBERCLEAR GTL MS	05/08/2014 ACT	Regeneration Heater, methanol to gasoline	13	MMBTU/H	Volatile Organic Compounds (VOC)		0		
MS-0092	EMBERCLEAR GTL MS	05/08/2014 ACT	Reactor Heater, 5	12	MMBTU/H	Volatile Organic Compounds (VOC)		0		
NV-0050	MGM MIRAGE	11/30/2009 ACT	WATER HEATERS - UNITS NY037 AND NY038 AT NEW YORK - NEW YORK	2	MMBTU/H	Volatile Organic Compounds (VOC)	LIMITING THE FUEL TO NATURAL GAS ONLY AND GOOD COMBUSTION PRACTICES	0.0054	LB/MMBTU	
NY-0104	CPV VALLEY ENERGY CENTER	08/01/2013 ACT	Gas heater	0		Volatile Organic Compounds (VOC)	Good combustion practice.	0		
OH-0355	GENERAL ELECTRIC AVIATION, EVENDALE PLANT	05/07/2013 ACT	4 Indirect-Fired Air Preheaters	0		Volatile Organic Compounds (VOC)		0.005	LB/MMBTU	
OH-0368	PALLAS NITROGEN LLC	04/19/2017 ACT	Startup Heater (B001)	100	MMBTU/H	Volatile Organic Compounds (VOC)	Good combustion control (i.e., high temperatures, sufficient excess air, sufficient residence time	0.54	LB/H	
OH-0368	PALLAS NITROGEN LLC	04/19/2017 ACT	Primary Reformer Heater (B002)	740	MMBTU/H	Volatile Organic Compounds (VOC)	good combustion control (i.e., high temperatures, sufficient excess air, sufficient residence time	4	LB/H	
OH-0374	GUERNSEY POWER STATION LLC	10/23/2017 ACT	Fuel Gas Heaters (2 identical, P007 and P008)	15	MMBTU/H	Volatile Organic Compounds (VOC)	Combustion control	0.075	LB/H	
OK-0164	MIDWEST CITY AIR DEPOT	01/08/2015 ACT	Heaters/Boilers	0	MMBTUH	Volatile Organic Compounds (VOC)	2. Good Combustion Practices w/emission rate limit of 0.005 lb/MMBTU based on AP-42	7.1	TONS PER YEAR	TOTAL FOR ALL UNITS.
OK-0173	CMC STEEL OKLAHOMA	01/19/2016 ACT	Heaters (Gas-Fired)	0		Volatile Organic Compounds (VOC)	Natural Gas Fuel.	0.0055	LB/MMBTU	
PA-0296	BERKS HOLLOW ENERGY ASSOC LLC/ONTELAUNEE	12/17/2013 ACT	Fuel Preheater	8.5	MMBTU/H	Volatile Organic Compounds (VOC)		0.05	LB/MMBTU	
PA-0311	MOXIE FREEDOM GENERATION PLANT	09/01/2015 ACT	Fuel Gas Heater	0		Volatile Organic Compounds (VOC)		0.005	LB/MMBTU	
*PA-0316	RENOVO ENERGY CENTER, LLC	01/26/2018 ACT	Water Bath Heater	15	MMBtu	Volatile Organic Compounds (VOC)		0.005	LB	MMBTU
SC-0179	CAROLINA PARTICLEBOARD	03/18/2015 ACT	THERMAL OIL HEATER #2	1.83	MMBTU/H	Volatile Organic Compounds (VOC)	NATURAL GAS USAGE AND GOOD COMBUSTION PRACTICES.	0.01	LB/H	
TX-0656	GAS TO GASOLINE PLANT	05/16/2014 ACT	Heaters	45	MMBTU/H	Volatile Organic Compounds (VOC)	clean fuel and good combustion practices	0.59	T/YR	
TX-0656	GAS TO GASOLINE PLANT	05/16/2014 ACT	heaters (5)	24.3	MMBTU/H	Volatile Organic Compounds (VOC)	clean fuel and good combustion practices	2.44	T/YR	
TX-0663	JACKSON COUNTY GAS PLANT	05/25/2012 ACT	Heaters	17	MMBTU/H	Volatile Organic Compounds (VOC)	Good combustion practices	0		
TX-0663	JACKSON COUNTY GAS PLANT	05/25/2012 ACT	Heaters	48	MMBTU/H	Volatile Organic Compounds (VOC)	Good combustion practices	0		
TX-0663	JACKSON COUNTY GAS PLANT	05/25/2012 ACT	Heaters	10	MMBTU/H	Volatile Organic Compounds (VOC)	Good combustion practices	0		
TX-0663	JACKSON COUNTY GAS PLANT	05/25/2012 ACT	Heaters	3	MMBTU/H	Volatile Organic Compounds (VOC)	Good combustion practice	0		
WI-0266	GREEN BAY PACKAGING, INC. - SHIPPING CONTAIN	09/06/2018 ACT	Space heaters (process P53)	40	mmBtu/hr	Volatile Organic Compounds (VOC)	Good combustion practices, use only natural gas, equip with Low NOx burners	0.0055	LB/MMBTU	
*WI-0292	GREEN BAY PACKAGING INC. â€" MILL DIVISION	04/01/2019 ACT	P44 Space Heaters	20	mmBTU/hr	Volatile Organic Compounds (VOC)	Good Combustion Practices, the Use of Low-NOx Burners	0.0055	LB/MMBTU	
WY-0067	ECHO SPRINGS GAS PLANT	04/01/2009 ACT	HOT OIL HEATER S38	84	MMBTU/H	Volatile Organic Compounds (VOC)	GOOD COMBUSTION PRACTICES	0.02	LB/MMBTU	

RBLC SUMMARY FOR HEATERS - PM										
RBLCID	FACILITY_NAME	PERMIT_ISSUANCE_DATE	PROCESS_NAME	THROUGHPUT	THROUGHPUT_UNIT	POLLUTANT	CONTROL_METHOD_DESCRIPTION	EMISSION_LIMIT_1	EMISSION_LIMIT_1_UNIT	EMISSION_LIMIT_1_AVG_TIME_CONDITION
AK-0071	INTERNATIONAL STATION POWER PLANT	12/20/2010 ACT	Sigma Thermal Auxiliary Heater (1)	12.5	MMBTU/H	Particulate matter, total (TPM)	Good Combustion Practices	7.6	LB/MMSCF	3-HOUR AVERAGE
AK-0071	INTERNATIONAL STATION POWER PLANT	12/20/2010 ACT	Sigma Thermal Auxiliary Heater (1)	12.5	MMBTU/H	Particulate matter, total < 10 Âµ (TPM10)	Good Combustion Practices	7.6	LB/MMSCF	3-HOUR AVERAGE
AK-0071	INTERNATIONAL STATION POWER PLANT	12/20/2010 ACT	Sigma Thermal Auxiliary Heater (1)	12.5	MMBTU/H	Particulate matter, total < 2.5 Âµ (TPM2.5)	Good Combustion Practices	7.6	LB/MMSCF	3-HOUR AVERAGE
AK-0083	KENAI NITROGEN OPERATIONS	01/06/2015 ACT	Startup Heater	101	MMBTU/H	Particulate matter, total (TPM)	Limited Use (200 hr/yr)	0.0074	LB/MMBTU	
AK-0083	KENAI NITROGEN OPERATIONS	01/06/2015 ACT	Startup Heater	101	MMBTU/H	Particulate matter, total < 10 Âµ (TPM10)		0.0074	LB/MMBTU	
AK-0083	KENAI NITROGEN OPERATIONS	01/06/2015 ACT	Startup Heater	101	MMBTU/H	Particulate matter, total < 2.5 Âµ (TPM2.5)	Limited Use (200 hr/yr)	0.0074	LB/MMBTU	
AR-0140	BIG RIVER STEEL LLC	09/18/2013 ACT	SMALL HEATERS AND DRYERS SN-05 THROUGH 19	0		Particulate matter, total < 2.5 Âµ (TPM2.5)	COMBUSTION OF NATURAL GAS AND GOOD COMBUSTION PRACTICE	5.2	X10^-4 LB/MMBTU	
AR-0140	BIG RIVER STEEL LLC	09/18/2013 ACT	SMALL HEATERS AND DRYERS SN-05 THROUGH 19	0		Particulate matter, filterable (FPM)	COMBUSTION OF NATURAL GAS AND GOOD COMBUSTION PRACTICE	5.2	X10^-4 LB/MMBTU	
AR-0140	BIG RIVER STEEL LLC	09/18/2013 ACT	SMALL HEATERS AND DRYERS SN-05 THROUGH 19	0		Particulate matter, total < 10 Âµ (TPM10)	COMBUSTION OF NATURAL GAS AND GOOD COMBUSTION PRACTICE	5.2	X10^-4 LB/MMBTU	
AR-0155	BIG RIVER STEEL LLC	11/07/2018 ACT	SMALL HEATERS AND DRYERS SN-05 THROUGH SN-11, SN-16, AND SN-17	0		Particulate matter, filterable (FPM)	COMBUSTION OF NATURAL GAS AND GOOD COMBUSTION PRACTICE	0.0075	LB/MMBTU	
AR-0155	BIG RIVER STEEL LLC	11/07/2018 ACT	SMALL HEATERS AND DRYERS SN-05 THROUGH SN-11, SN-16, AND SN-17	0		Particulate matter, total < 10 Âµ (TPM10)	COMBUSTION OF NATURAL GAS AND GOOD COMBUSTION PRACTICE	0.0075	LB/MMBTU	
AR-0155	BIG RIVER STEEL LLC	11/07/2018 ACT	SMALL HEATERS AND DRYERS SN-05 THROUGH SN-11, SN-16, AND SN-17	0		Particulate matter, filterable < 2.5 Âµ (FPM2.5)	COMBUSTION OF NATURAL GAS AND GOOD COMBUSTION PRACTICE	0.0075	LB/MMBTU	
AR-0155	BIG RIVER STEEL LLC	11/07/2018 ACT	PREHEATER, GALVANIZING LINE SN-28	78.2	MMBTU/HR	Particulate matter, filterable (FPM)	COMBUSTION OF NATURAL GAS AND GOOD COMBUSTION PRACTICE	0.0012	LB/MMBTU	
AR-0155	BIG RIVER STEEL LLC	11/07/2018 ACT	PREHEATER, GALVANIZING LINE SN-28	78.2	MMBTU/HR	Particulate matter, filterable < 10 Âµ (FPM10)	COMBUSTION OF NATURAL GAS AND GOOD COMBUSTION PRACTICE	0.0012	LB/MMBTU	
AR-0155	BIG RIVER STEEL LLC	11/07/2018 ACT	PREHEATER, GALVANIZING LINE SN-28	78.2	MMBTU/HR	Particulate matter, total < 2.5 Âµ (TPM2.5)	COMBUSTION OF NATURAL GAS AND GOOD COMBUSTION PRACTICE	0.0012	LB/MMBTU	
*AR-0159	BIG RIVER STEEL LLC	04/05/2019 ACT	SMALL HEATERS AND DRYERS SN-16 through SN-19B	0		Particulate matter, filterable (FPM)	COMBUSTION OF NATURAL GAS AND GOOD COMBUSTION PRACTICE	0.0075	LB/MMBTU	
*AR-0159	BIG RIVER STEEL LLC	04/05/2019 ACT	SMALL HEATERS AND DRYERS SN-16 through SN-19B	0		Particulate matter, total < 10 Âµ (TPM10)	COMBUSTION OF NATURAL GAS AND GOOD COMBUSTION PRACTICE	0.0075	LB/MMBTU	
*AR-0159	BIG RIVER STEEL LLC	04/05/2019 ACT	SMALL HEATERS AND DRYERS SN-16 through SN-19B	0		Particulate matter, total < 2.5 Âµ (TPM2.5)	COMBUSTION OF NATURAL GAS AND GOOD COMBUSTION PRACTICE	0.0075	LB/MMBTU	
*AR-0159	BIG RIVER STEEL LLC	04/05/2019 ACT	SMALL HEATERS AND DRYERS SN-10 through SN-13	0		Particulate matter, filterable < 2.5 Âµ (FPM2.5)	COMBUSTION OF NATURAL GAS AND GOOD COMBUSTION PRACTICE	0.0075	LB/MMBTU	
*AR-0159	BIG RIVER STEEL LLC	04/05/2019 ACT	SMALL HEATERS AND DRYERS SN-10 through SN-13	0		Particulate matter, filterable < 10 Âµ (FPM10)	COMBUSTION OF NATURAL GAS AND GOOD COMBUSTION PRACTICE	0.0075	LB/MMBTU	
*AR-0159	BIG RIVER STEEL LLC	04/05/2019 ACT	SMALL HEATERS AND DRYERS SN-10 through SN-13	0		Particulate matter, filterable (FPM)	COMBUSTION OF NATURAL GAS AND GOOD COMBUSTION PRACTICE	0.0075	LB/MMBTU	
*AR-0159	BIG RIVER STEEL LLC	04/05/2019 ACT	PREHEATERS, GALVANIZING LINE SN-28 and SN-29	0		Particulate matter, filterable (FPM)	COMBUSTION OF NATURAL GAS AND GOOD COMBUSTION PRACTICE	0.0012	LB/MMBTU	
*AR-0159	BIG RIVER STEEL LLC	04/05/2019 ACT	PREHEATERS, GALVANIZING LINE SN-28 and SN-29	0		Particulate matter, total < 10 Âµ (TPM10)	COMBUSTION OF NATURAL GAS AND GOOD COMBUSTION PRACTICE	0.0012	LB/MMBTU	
*AR-0159	BIG RIVER STEEL LLC	04/05/2019 ACT	PREHEATERS, GALVANIZING LINE SN-28 and SN-29	0		Particulate matter, total < 2.5 Âµ (TPM2.5)	COMBUSTION OF NATURAL GAS AND GOOD COMBUSTION PRACTICE	0.0012	LB/MMBTU	
*AR-0159	BIG RIVER STEEL LLC	04/05/2019 ACT	COLD MILL SPACE HEATERS	0		Particulate matter, filterable (FPM)	Combustion of Natural gas and Good Combustion Practice	0.0075	LB/MMBTU	
*AR-0159	BIG RIVER STEEL LLC	04/05/2019 ACT	COLD MILL SPACE HEATERS	0		Particulate matter, total < 10 Âµ (TPM10)	Combustion of Natural gas and Good Combustion Practice	0.0075	LB/MMBTU	
*AR-0159	BIG RIVER STEEL LLC	04/05/2019 ACT	COLD MILL SPACE HEATERS	0		Particulate matter, total < 2.5 Âµ (TPM2.5)	Combustion of Natural gas and Good Combustion Practice	0.0075	LB/MMBTU	
CA-1191	VICTORVILLE 2 HYBRID POWER PROJECT	03/11/2010 ACT	AUXILIARY HEATER	40	MMBTU/H	Particulate matter, total (TPM)	OPERATIONAL RESTRICTION OF 1000 HR/YR, USE PUC QUALITY NATURAL G	0.2	GRAINS PER 100 DSCF	
CA-1191	VICTORVILLE 2 HYBRID POWER PROJECT	03/11/2010 ACT	AUXILIARY HEATER	40	MMBTU/H	Particulate matter, total < 2.5 Âµ (TPM2.5)	OPERATIONAL RESTRICTION OF 1000 HR/YR	0.2	GRAINS PER 100 DSCF	
IA-0106	CF INDUSTRIES NITROGEN, LLC - PORT NEAL N	07/12/2013 ACT	Startup Heater	58.8	MMBTU/H	Particulate matter, total (TPM)	good operating practices and use of natural gas	0.0024	LB/MMBTU	AVERAGE OF THREE (3) STACK TEST RUNS
IA-0106	CF INDUSTRIES NITROGEN, LLC - PORT NEAL N	07/12/2013 ACT	Startup Heater	58.8	MMBTU/H	Particulate matter, total < 10 Âµ (TPM10)	good operating practices & use of natural gas	0.0024	LB/MMBTU	AVERAGE OF THREE (3) STACK TEST RUNS
IA-0106	CF INDUSTRIES NITROGEN, LLC - PORT NEAL N	07/12/2013 ACT	Startup Heater	58.8	MMBTU/H	Particulate matter, total < 2.5 Âµ (TPM2.5)	good operating practices & use of natural gas	0.0024	LB/MMBTU	AVERAGE OF THREE (3) STACK TEST RUNS
IA-0107	MARSHALLTOWN GENERATING STATION	04/14/2014 ACT	dew point heater	13.32	mmBtu/hr	Particulate matter, total (TPM)		0.008	LB/MMBTU	3-HOUR AVERAGE
IL-0129	CPV THREE RIVERS ENERGY CENTER	07/30/2018 ACT	Fuel Heater	12.8	mmBtu/hr	Particulate matter, total (TPM)	Good combustion practice	0.0075	LB/MMBTU	
*IL-0130	JACKSON ENERGY CENTER	12/31/2018 ACT	Fuel Heater	13	mmBtu/hour	Particulate matter, total (TPM)	Good combustion practice	0.0075	LB/MMBTU	
IN-0263	MIDWEST FERTILIZER COMPANY LLC	03/23/2017 ACT	STARTUP HEATER EU-002	70	MMBTU/HR	Particulate matter, filterable (FPM)	GOOD COMBUSTION PRACTICE	0.13	LB/H	3HR AVERAGE
IN-0263	MIDWEST FERTILIZER COMPANY LLC	03/23/2017 ACT	STARTUP HEATER EU-002	70	MMBTU/HR	Particulate matter, total < 10 Âµ (TPM10)	GOOD COMBUSTION PRACTICES	0.522	LB/H	3HOUR AVERAGE
IN-0263	MIDWEST FERTILIZER COMPANY LLC	03/23/2017 ACT	STARTUP HEATER EU-002	70	MMBTU/HR	Particulate matter, total < 2.5 Âµ (TPM2.5)	GOOD COMBUSTION PRACTICES	0.522	LB/H	3 HOUR AVERAGE
IN-0285	WHITING CLEAN ENERGY, INC.	08/02/2017 ACT	Space Heaters	0		Particulate matter, total (TPM)		0.0072	LB/MMBTU	WHEN COMBUSTING NATURAL GAS
*KS-0030	MID-KANSAS ELECTRIC COMPANY, LLC - RUBA	03/31/2016 ACT	Indirect fuel-gas heater	2	mmBTU/hr	Particulate matter, total (TPM)		0.015	LB/H	EXCLUDES STARTUP, SHUTDOWN & MALFUNCTION
*KS-0030	MID-KANSAS ELECTRIC COMPANY, LLC - RUBA	03/31/2016 ACT	Indirect fuel-gas heater	2	mmBTU/hr	Particulate matter, total < 10 Âµ (TPM10)		0.015	LB/H	EXCLUDES STARTUP, SHUTDOWN & MALFUNCTION
*KS-0030	MID-KANSAS ELECTRIC COMPANY, LLC - RUBA	03/31/2016 ACT	Indirect fuel-gas heater	2	mmBTU/hr	Particulate matter, total < 2.5 Âµ (TPM2.5)		0.015	LB/H	EXCLUDES STARTUP, SHUTDOWN & MALFUNCTION
LA-0231	LAKE CHARLES GASIFICATION FACILITY	06/22/2009 ACT	SHIFT REACTOR STARTUP HEATER	34.2	MMBTU/H	Particulate matter, total < 10 Âµ (TPM10)	GOOD DESIGN AND PROPER OPERATION	0.25	LB/H	MAXIMUM
LA-0231	LAKE CHARLES GASIFICATION FACILITY	06/22/2009 ACT	GASIFIER STARTUP PREHEATER BURNERS (5)	35	MMBTU/H	Particulate matter, total < 10 Âµ (TPM10)	GOOD DESIGN AND PROPER OPERATION	0.03	LB/H	MAXIMUM (EACH)
LA-0231	LAKE CHARLES GASIFICATION FACILITY	06/22/2009 ACT	STEAM SUPERHEATERS (A & B)	415	MMBTU/H	Particulate matter, total < 10 Âµ (TPM10)	GOOD DESIGN AND PROPER OPERATION	3.09	LB/H	TOTAL
LA-0231	LAKE CHARLES GASIFICATION FACILITY	06/22/2009 ACT	METHANATION STARTUP HEATERS	56.9	MMBTU/H	Particulate matter, total < 10 Âµ (TPM10)	GOOD DESIGN AND PROPER OPERATION	0.42	LB/H	MAXIMUM
LA-0244	LAKE CHARLES CHEMICAL COMPLEX - LAB UNI	11/29/2010 ACT	EQT0027 - PACOL CHARGE HEATER H-201	87.3	MMBTU/H	Particulate matter, total < 10 Âµ (TPM10)		0.86	LB/H	HOURLY MAXIMUM
LA-0244	LAKE CHARLES CHEMICAL COMPLEX - LAB UNI	11/29/2010 ACT	EQT0028 - PACOL STARTUP HEATER H-202	21	MMBTU/H	Particulate matter, total < 10 Âµ (TPM10)	No additional Control	0.21	LB/H	HOURLY MAXIMUM
LA-0244	LAKE CHARLES CHEMICAL COMPLEX - LAB UNI	11/29/2010 ACT	EQT0029 - Hot Oil Heater H-601	170	MMBTU/H	Particulate matter, total < 10 Âµ (TPM10)	No additional control	1.71	LB/H	HOURLY MAXIMUM
LA-0272	AMMONIA PRODUCTION FACILITY	03/27/2013 ACT	AMMONIA START-UP HEATER (102-B)	59.4	MM BTU/HR	Particulate matter, total < 10 Âµ (TPM10)	GOOD COMBUSTION PRACTICES: PROPER DESIGN OF BURNER AND FIREBO	0.53	LB/H	HOURLY MAXIMUM
LA-0272	AMMONIA PRODUCTION FACILITY	03/27/2013 ACT	AMMONIA START-UP HEATER (102-B)	59.4	MM BTU/HR	Particulate matter, total < 2.5 Âµ (TPM2.5)	GOOD COMBUSTION PRACTICES: PROPER DESIGN OF BURNER AND FIREBO	0.53	LB/H	HOURLY MAXIMUM
LA-0305	LAKE CHARLES METHANOL FACILITY	06/30/2016 ACT	Auxiliary Boilers and Superheaters	0		Particulate matter, total < 10 Âµ (TPM10)	good engineering design and proper operation	0		
LA-0305	LAKE CHARLES METHANOL FACILITY	06/30/2016 ACT	Auxiliary Boilers and Superheaters	0		Particulate matter, filterable < 2.5 Âµ (FPM2.5)	good engineering design and proper operation	0		
LA-0307	MAGNOLIA LNG FACILITY	03/21/2016 ACT	Regenerative Heaters	7.37	mm btu/hr	Particulate matter, total < 10 Âµ (TPM10)	good combustion practices	0		
LA-0307	MAGNOLIA LNG FACILITY	03/21/2016 ACT	Regenerative Heaters	7.37	mm btu/hr	Particulate matter, total < 2.5 Âµ (TPM2.5)	good combustion practices	0		
*LA-0315	G2G PLANT	05/23/2014 ACT	Reactor Charge Heater - 53B001	10.1	MMBTU/HR	Particulate matter, total < 10 Âµ (TPM10)	Combustion controls (proper burner design and operation using natural gas	0.08	LB/H	HOURLY MAXIMUM
*LA-0315	G2G PLANT	05/23/2014 ACT	Reactor Charge Heater - 53B001	10.1	MMBTU/HR	Particulate matter, total < 2.5 Âµ (TPM2.5)	Combustion controls (proper burner design and operation using natural gas	0.08	LB/H	HOURLY MAXIMUM
*LA-0315	G2G PLANT	05/23/2014 ACT	Regeneraton Heater - 51B001	61	MMBTU/HR	Particulate matter, total < 10 Âµ (TPM10)	Combustion controls (proper burner design and operation using natural gas	0.45	LB/H	HOURLY MAXIMUM
*LA-0315	G2G PLANT	05/23/2014 ACT	Regeneraton Heater - 51B001	61	MMBTU/HR	Particulate matter, total < 2.5 Âµ (TPM2.5)	Combustion controls (proper burner design and operation using natural gas	0.45	LB/H	HOURLY MAXIMUM
*LA-0315	G2G PLANT	05/23/2014 ACT	Recycle Gas Heater - 51B002A	33	MMBTU/HR	Particulate matter, total < 10 Âµ (TPM10)	Combustion controls (proper burner design and operation using natural gas	0.24	LB/H	HOURLY MAXIMUM
*LA-0315	G2G PLANT	05/23/2014 ACT	Recycle Gas Heater - 51B002A	33	MMBTU/HR	Particulate matter, total < 2.5 Âµ (TPM2.5)	Combustion controls (proper burner design and operation using natural gas	0.24	LB/H	HOURLY MAXIMUM
*LA-0315	G2G PLANT	05/23/2014 ACT	Recycle Gas Heater - 51B002B	33	MMBTU/HR	Particulate matter, total < 10 Âµ (TPM10)	Combustion controls (proper burner design and operation using natural gas	0.24	LB/H	HOURLY MAXIMUM
*LA-0315	G2G PLANT	05/23/2014 ACT	Recycle Gas Heater - 51B002B	33	MMBTU/HR	Particulate matter, total < 2.5 Âµ (TPM2.5)	Combustion controls (proper burner design and operation using natural gas	0.24	LB/H	HOURLY MAXIMUM
*LA-0315	G2G PLANT	05/23/2014 ACT	Recycle Gas Heater - 51B002C	33	MMBTU/HR	Particulate matter, total < 10 Âµ (TPM10)	Combustion controls (proper burner design and operation using natural gas	0.24	LB/H	HOURLY MAXIMUM
*LA-0315	G2G PLANT	05/23/2014 ACT	Recycle Gas Heater - 51B002C	33	MMBTU/HR	Particulate matter, total < 2.5 Âµ (TPM2.5)	Combustion controls (proper burner design and operation using natural gas	0.24	LB/H	HOURLY MAXIMUM
*LA-0315	G2G PLANT	05/23/2014 ACT	Recycle Gas Heater - 51B002D	33	MMBTU/HR	Particulate matter, total < 10 Âµ (TPM10)	Combustion controls (proper burner design and operation using natural gas	0.24	LB/H	HOURLY MAXIMUM
*LA-0315	G2G PLANT	05/23/2014 ACT	Recycle Gas Heater - 51B002D	33	MMBTU/HR	Particulate matter, total < 2.5 Âµ (TPM2.5)	Combustion controls (proper burner design and operation using natural gas	0.24	LB/H	HOURLY MAXIMUM

*LA-0315	G2G PLANT	05/23/2014 ACT	Recycle Gas Heater - 51B002E	33	MMBTU/HR	Particulate matter, total < 10 Âµ (TPM10)	Combustion controls (proper burner design and operation using natural gas	0.24	LB/H	HOURLY MAXIMUM
*LA-0315	G2G PLANT	05/23/2014 ACT	Recycle Gas Heater - 51B002E	33	MMBTU/HR	Particulate matter, total < 2.5 Âµ (TPM2.5)	Combustion controls (proper burner design and operation using natural gas	0.24	LB/H	HOURLY MAXIMUM
MD-0041	CPV ST. CHARLES	04/23/2014 ACT	FUEL GAS HEATER	9.5	MMBTU/H	Particulate matter, filterable (FPM)	USE OF PIPELINE QUALITY NATURAL GAS AND GOOD COMBUSTION PRACTI	0.007	LB/MMBTU	
MD-0041	CPV ST. CHARLES	04/23/2014 ACT	FUEL GAS HEATER	9.5	MMBTU/H	Particulate matter, total < 10 Âµ (TPM10)	USE OF PIPELINE QUALITY NATURAL GAS AND GOOD COMBUSTION PRACTI	0.007	LB/MMBTU	
*MD-0042	WILDCAT POINT GENERATION FACILITY	04/08/2014 ACT	DEW POINT HEATER	5	MMBTU/H	Particulate matter, filterable (FPM)	EXCLUSIVE USE OF PIPELINE QUALITY NATURAL GAS AND GOOD COMBUST	0.0075	LB/MMBTU	3-HOUR AVERAGE BASIS
*MD-0042	WILDCAT POINT GENERATION FACILITY	04/08/2014 ACT	DEW POINT HEATER	5	MMBTU/H	Particulate matter, total < 10 Âµ (TPM10)	EXCLUSIVE USE OF PIPELINE QUALITY NATURAL GAS AND GOOD COMBUST	0.0075	LB/MMBTU	3-HOUR BLOCK AVERAGE
*MD-0042	WILDCAT POINT GENERATION FACILITY	04/08/2014 ACT	DEW POINT HEATER	5	MMBTU/H	Particulate matter, total < 2.5 Âµ (TPM2.5)	EXCLUSIVE USE OF PIPELINE QUALITY NATURAL GAS AND GOOD COMBUST	0.0075	LB/MMBTU	3-HOUR BLOCK AVERAGE
MD-0045	MATTAWOMAN ENERGY CENTER	11/13/2015 ACT	FUEL GAS HEATER	13.8	MMBTU/H	Particulate matter, filterable (FPM)	USE OF PIPELINE QUALITY NATURAL GAS AND GOOD COMBUSTION PRACTI	0.0019	LB/MMBTU	
MD-0045	MATTAWOMAN ENERGY CENTER	11/13/2015 ACT	FUEL GAS HEATER	13.8	MMBTU/H	Particulate matter, total < 10 Âµ (TPM10)	USE OF PIPELINE QUALITY NATURAL GAS AND GOOD COMBUSTION PRACTI	0.0075	LB/MMBTU	3-HOUR BLOCK AVERAGE
MD-0045	MATTAWOMAN ENERGY CENTER	11/13/2015 ACT	FUEL GAS HEATER	13.8	MMBTU/H	Particulate matter, total < 2.5 Âµ (TPM2.5)	USE OF PIPELINE QUALITY NATURAL GAS AND GOOD COMBUSTION PRACTI	0.0075	LB/MMBTU	3-HOUR BLOCK AVERAGE
MI-0406	RENAISSANCE POWER LLC	11/01/2013 ACT	EU-HEATERSC: Natural gas-fired fuel heater used for heating natural gas prior	20	MMBTU/H	Particulate matter, filterable (FPM)	Good combustion practices	0.009	LB/MMBTU	TEST PROTOCOL
MI-0406	RENAISSANCE POWER LLC	11/01/2013 ACT	EU-HEATERSC: Natural gas-fired fuel heater used for heating natural gas prior	20	MMBTU/H	Particulate matter, total < 10 Âµ (TPM10)	Good combustion practices	0.009	LB/MMBTU	TEST PROTOCOL
MI-0406	RENAISSANCE POWER LLC	11/01/2013 ACT	EU-HEATERSC: Natural gas-fired fuel heater used for heating natural gas prior	20	MMBTU/H	Particulate matter, total < 2.5 Âµ (TPM2.5)	Good combustion practices	0.009	LB/MMBTU	TEST PROTOCOL
MI-0410	THETFORD GENERATING STATION	07/25/2013 ACT	FG-FUELHTRS: 2 natural gas fuel heaters, 12 MMBTU/H each	12	MMBTU/H heat input each fuel heater	Particulate matter, total < 10 Âµ (TPM10)	Efficient combustion; natural gas fuel.	0.007	LB/MMBTU	TEST PROTOCOL WILL SPECIFY AVG. TIME
MI-0410	THETFORD GENERATING STATION	07/25/2013 ACT	FG-FUELHTRS: 2 natural gas fuel heaters, 12 MMBTU/H each	12	MMBTU/H heat input each fuel heater	Particulate matter, total < 2.5 Âµ (TPM2.5)	Efficient combustion; natural gas fuel.	0.007	LB/MMBTU	TEST PROTOCOL WILL SPECIFY AVG. TIME
MI-0410	THETFORD GENERATING STATION	07/25/2013 ACT	FG-FUELHTRS: 2 natural gas fuel heaters, 12 MMBTU/H each	12	MMBTU/H heat input each fuel heater	Particulate matter, filterable (FPM)	Efficient combustion; natural gas fuel.	0.0018	LB/MMBTU	TEST PROTOCOL WILL SPECIFY AVG. TIME.
MI-0412	HOLLAND BOARD OF PUBLIC WORKS - EAST ST	12/04/2013 ACT	Fuel pre-heater (EUFUELHTR)	3.7	MMBTU/H	Particulate matter, filterable (FPM)	Good combustion practices.	0.007	LB/MMBTU	TEST PROTOCOL
MI-0412	HOLLAND BOARD OF PUBLIC WORKS - EAST ST	12/04/2013 ACT	Fuel pre-heater (EUFUELHTR)	3.7	MMBTU/H	Particulate matter, total < 10 Âµ (TPM10)	Good combustion practices.	0.0075	LB/MMBTU	TEST PROTOCOL
MI-0412	HOLLAND BOARD OF PUBLIC WORKS - EAST ST	12/04/2013 ACT	Fuel pre-heater (EUFUELHTR)	3.7	MMBTU/H	Particulate matter, total < 2.5 Âµ (TPM2.5)	Good combustion practices.	0.0075	LB/MMBTU	TEST PROTOCOL
MI-0421	GRAYLING PARTICLEBOARD	08/26/2016 ACT	EUTOH (In FGTOH)--Thermal Oil Heater	34	MMBTU/H	Particulate matter, total < 10 Âµ (TPM10)	Good combustion practices.	0.0005	LB/MMBTU	TEST PROTOCOL WILL SPECIFY AVG TIME
MI-0421	GRAYLING PARTICLEBOARD	08/26/2016 ACT	EUTOH (In FGTOH)--Thermal Oil Heater	34	MMBTU/H	Particulate matter, filterable (FPM)	Good combustion practices	0.0075	LB/MMBTU	TEST PROTOCOL WILL SPECIFY AVG TIME
MI-0421	GRAYLING PARTICLEBOARD	08/26/2016 ACT	EUTOH (In FGTOH)--Thermal Oil Heater	34	MMBTU/H	Particulate matter, total < 2.5 Âµ (TPM2.5)	Good combustion practices.	0.0004	LB/MMBTU	TEST PROTOCOL WILL SPECIFY AVG TIME
MI-0423	INDECK NILES, LLC	01/04/2017 ACT	FGFUELHTR (Two fuel pre-heaters identified as EUFUELHTR1 & EUFUELH	27	MMBTU/H	Particulate matter, filterable (FPM)	Good combustion practices.	0.002	LB/MMBTU	TEST PROTOCOL WILL SPECIFY AVG TIME.
MI-0423	INDECK NILES, LLC	01/04/2017 ACT	FGFUELHTR (Two fuel pre-heaters identified as EUFUELHTR1 & EUFUELH	27	MMBTU/H	Particulate matter, total < 10 Âµ (TPM10)	Good combustion practices.	0.2	LB/H	HOURLY; EACH FUEL HEATER
MI-0423	INDECK NILES, LLC	01/04/2017 ACT	FGFUELHTR (Two fuel pre-heaters identified as EUFUELHTR1 & EUFUELH	27	MMBTU/H	Particulate matter, total < 2.5 Âµ (TPM2.5)	Good combustion practices.	0.2	LB/H	HOURLY; EACH FUEL HEATER
MI-0424	HOLLAND BOARD OF PUBLIC WORKS - EAST ST	12/05/2016 ACT	EUFUELHTR (Fuel pre-heater)	3.7	MMBTU/H	Particulate matter, filterable (FPM)	Good combustion practices.	0.007	LB/MMBTU	TEST PROTOCOL WILL SPECIFY AVG TIME
MI-0424	HOLLAND BOARD OF PUBLIC WORKS - EAST ST	12/05/2016 ACT	EUFUELHTR (Fuel pre-heater)	3.7	MMBTU/H	Particulate matter, total < 10 Âµ (TPM10)	Good combustion practices.	0.0075	LB/MMBTU	TEST PROTOCOL WILL SPECIFY AVG TIME
MI-0424	HOLLAND BOARD OF PUBLIC WORKS - EAST ST	12/05/2016 ACT	EUFUELHTR (Fuel pre-heater)	3.7	MMBTU/H	Particulate matter, total < 2.5 Âµ (TPM2.5)	Good combustion practices.	0.0075	LB/MMBTU	TEST PROTOCOL WILL SPECIFY AVG TIME.
MI-0435	BELLE RIVER COMBINED CYCLE POWER PLANT	07/16/2018 ACT	EUFUELHTR1: Natural gas fired fuel heater	20.8	MMBTU/H	Particulate matter, filterable (FPM)	Low sulfur fuel	0.15	LB/H	HOURLY
MI-0435	BELLE RIVER COMBINED CYCLE POWER PLANT	07/16/2018 ACT	EUFUELHTR1: Natural gas fired fuel heater	20.8	MMBTU/H	Particulate matter, total < 10 Âµ (TPM10)	Low sulfur fuel	0.15	LB/H	HOURLY
MI-0435	BELLE RIVER COMBINED CYCLE POWER PLANT	07/16/2018 ACT	EUFUELHTR1: Natural gas fired fuel heater	20.8	MMBTU/H	Particulate matter, total < 2.5 Âµ (TPM2.5)	Low sulfur fuel	0.15	LB/H	HOURLY
MI-0435	BELLE RIVER COMBINED CYCLE POWER PLANT	07/16/2018 ACT	EUFUELHTR2: Natural gas fired fuel heater	3.8	MMBTU/H	Particulate matter, filterable (FPM)	Low sulfur fuel	0.03	LB/H	HOURLY
MI-0435	BELLE RIVER COMBINED CYCLE POWER PLANT	07/16/2018 ACT	EUFUELHTR2: Natural gas fired fuel heater	3.8	MMBTU/H	Particulate matter, total < 10 Âµ (TPM10)	Low sulfur fuel	0.03	LB/H	HOURLY
MI-0435	BELLE RIVER COMBINED CYCLE POWER PLANT	07/16/2018 ACT	EUFUELHTR2: Natural gas fired fuel heater	3.8	MMBTU/H	Particulate matter, total < 2.5 Âµ (TPM2.5)	Low sulfur fuel	0.03	LB/H	HOURLY
*MI-0440	MICHIGAN STATE UNIVERSITY	05/22/2019 ACT	FGFUELHEATERS	25	MMBTU/H	Particulate matter, filterable (FPM)	Good combustion practices	0.002	LB/MMBTU	HOURLY; EACH UNIT
*MI-0440	MICHIGAN STATE UNIVERSITY	05/22/2019 ACT	FGFUELHEATERS	25	MMBTU/H	Particulate matter, total < 10 Âµ (TPM10)	Good combustion practices	0.008	LB/MMBTU	HOURLY; EACH UNIT
*MI-0440	MICHIGAN STATE UNIVERSITY	05/22/2019 ACT	FGFUELHEATERS	25	MMBTU/H	Particulate matter, total < 2.5 Âµ (TPM2.5)	Good combustion practices	0.008	LB/MMBTU	HOURLY; EACH UNIT
MS-0092	EMBERCLEAR GTL MS	05/08/2014 ACT	Regeneration Heater, methanol to gasoline	13	MMBTU/H	Particulate matter, total (TPM)		0		
MS-0092	EMBERCLEAR GTL MS	05/08/2014 ACT	Regeneration Heater, methanol to gasoline	13	MMBTU/H	Particulate matter, total < 10 Âµ (TPM10)		0		
MS-0092	EMBERCLEAR GTL MS	05/08/2014 ACT	Regeneration Heater, methanol to gasoline	13	MMBTU/H	Particulate matter, total < 2.5 Âµ (TPM2.5)		0		
MS-0092	EMBERCLEAR GTL MS	05/08/2014 ACT	Reactor Heater, 5	12	MMBTU/H	Particulate matter, total (TPM)		0		
MS-0092	EMBERCLEAR GTL MS	05/08/2014 ACT	Reactor Heater, 5	12	MMBTU/H	Particulate matter, total < 10 Âµ (TPM10)		0		
MS-0092	EMBERCLEAR GTL MS	05/08/2014 ACT	Reactor Heater, 5	12	MMBTU/H	Particulate matter, total < 2.5 Âµ (TPM2.5)		0		
NV-0050	MGM MIRAGE	11/30/2009 ACT	WATER HEATERS - UNITS NY037 AND NY038 AT NEW YORK - NEW YORK	2	MMBTU/H	Particulate matter, filterable < 10 Âµ (FPM10)	LIMITING THE FUEL TO NATURAL GAS ONLY AND GOOD COMBUSTION PRA	0.0075	LB/MMBTU	
NY-0104	CPV VALLEY ENERGY CENTER	08/01/2013 ACT	Gas heater	0		Particulate matter, filterable (FPM)	Natural gas.	0.0076	LB/MMBTU	1 H
OH-0355	GENERAL ELECTRIC AVIATION, EVENDALE PLA	05/07/2013 ACT	4 Indirect-Fired Air Preheaters	0		Particulate matter, total < 10 Âµ (TPM10)		0.007	LB/MMBTU	
OH-0368	PALLAS NITROGEN LLC	04/19/2017 ACT	Startup Heater (B001)	100	MMBTU/H	Particulate matter, total < 10 Âµ (TPM10)	Good combustion control (i.e., high temperatures, sufficient excess air, suff	0.75	LB/H	
OH-0368	PALLAS NITROGEN LLC	04/19/2017 ACT	Startup Heater (B001)	100	MMBTU/H	Particulate matter, total < 2.5 Âµ (TPM2.5)	Good combustion control (i.e., high temperatures, sufficient excess air, suff	0.75	LB/H	
OH-0368	PALLAS NITROGEN LLC	04/19/2017 ACT	Primary Reformer Heater (B002)	740	MMBTU/H	Particulate matter, total < 10 Âµ (TPM10)	good combustion control (i.e., high temperatures, sufficient excess air, suff	5.6	LB/H	
OH-0368	PALLAS NITROGEN LLC	04/19/2017 ACT	Primary Reformer Heater (B002)	740	MMBTU/H	Particulate matter, total < 2.5 Âµ (TPM2.5)	good combustion control (i.e., high temperatures, sufficient excess air, suff	5.6	LB/H	
OH-0374	GUERNSEY POWER STATION LLC	10/23/2017 ACT	Fuel Gas Heaters (2 identical, P007 and P008)	15	MMBTU/H	Particulate matter, total (TPM)	Combustion control	0.075	LB/H	
OH-0374	GUERNSEY POWER STATION LLC	10/23/2017 ACT	Fuel Gas Heaters (2 identical, P007 and P008)	15	MMBTU/H	Particulate matter, total < 10 Âµ (TPM10)	Combustion control	0.075	LB/H	
OH-0374	GUERNSEY POWER STATION LLC	10/23/2017 ACT	Fuel Gas Heaters (2 identical, P007 and P008)	15	MMBTU/H	Particulate matter, total < 2.5 Âµ (TPM2.5)	Combustion control	0.075	LB/H	
OH-0379	PETMIN USA INCORPORATED	02/06/2019 ACT	Process gas heater (P001)	218.9	MMBTU/H	Particulate matter, total < 10 Âµ (TPM10)	Good combustion practices and the use of natural gas	1.63	LB/H	SEE NOTES.
OH-0379	PETMIN USA INCORPORATED	02/06/2019 ACT	Process gas heater (P001)	218.9	MMBTU/H	Particulate matter, total < 2.5 Âµ (TPM2.5)	Good combustion practices and the use of natural gas	1.63	LB/H	SEE NOTES.
OH-0379	PETMIN USA INCORPORATED	02/06/2019 ACT	Ladle Preheaters (P002, P003 and P004)	15	MMBTU/H	Particulate matter, total < 10 Âµ (TPM10)	Good combustion practices and the use of natural gas	0.112	LB/H	
OH-0379	PETMIN USA INCORPORATED	02/06/2019 ACT	Ladle Preheaters (P002, P003 and P004)	15	MMBTU/H	Particulate matter, total < 2.5 Âµ (TPM2.5)	Good combustion practices and the use of natural gas	0.112	LB/H	
OK-0173	CMC STEEL OKLAHOMA	01/19/2016 ACT	Heaters (Gas-Fired)	0		Particulate matter, total < 10 Âµ (TPM10)	Natural Gas Fuel.	0.0076	LB/MMBTU	
OK-0173	CMC STEEL OKLAHOMA	01/19/2016 ACT	Heaters (Gas-Fired)	0		Particulate matter, total < 2.5 Âµ (TPM2.5)	Natural Gas Fuel.	0.0076	LB/MMBTU	
PA-0296	BERKS HOLLOW ENERGY ASSOC LLC/ONTELAU	12/17/2013 ACT	Fuel Preheater	8.5	MMBTU/H	Particulate matter, filterable < 10 Âµ (FPM10)		0.007	LB/MMBTU	
PA-0311	MOXIE FREEDOM GENERATION PLANT	09/01/2015 ACT	Fuel Gas Heater	0		Particulate matter, total (TPM)		0.007	LB/MMBTU	
PA-0311	MOXIE FREEDOM GENERATION PLANT	09/01/2015 ACT	Fuel Gas Heater	0		Particulate matter, total < 2.5 Âµ (TPM2.5)		0.007	LB/MMBTU	
PA-0311	MOXIE FREEDOM GENERATION PLANT	09/01/2015 ACT	Fuel Gas Heater	0		Particulate matter, total < 10 Âµ (TPM10)		0.007	LB/MMBTU	
SC-0179	CAROLINA PARTICLEBOARD	03/18/2015 ACT	THERMAL OIL HEATER #2	1.83	MMBTU/H	Particulate matter, total < 10 Âµ (TPM10)	USE OF NATURAL GAS AND GOOD COMBUSTION PRACTICES	0.01	LB/H	
SC-0179	CAROLINA PARTICLEBOARD	03/18/2015 ACT	THERMAL OIL HEATER #2	1.83	MMBTU/H	Particulate matter, total < 2.5 Âµ (TPM2.5)	NATURAL GAS USAGE AND GOOD COMBUSTION PRACTICES.	0.003	LB/H	
TX-0656	GAS TO GASOLINE PLANT	05/16/2014 ACT	Heaters	45	MMBTU/H	Particulate matter, total < 10 Âµ (TPM10)	clean fuel and good combustion practices	0.81	T/YR	
TX-0656	GAS TO GASOLINE PLANT	05/16/2014 ACT	Heaters	45	MMBTU/H	Particulate matter, total < 2.5 Âµ (TPM2.5)	clean fuel and good combustion practices	0.81	T/YR	
TX-0656	GAS TO GASOLINE PLANT	05/16/2014 ACT	heaters (5)	24.3	MMBTU/H	Particulate matter, total < 10 Âµ (TPM10)	clean fuel and good combustion practices	3.38	T/YR	
TX-0656	GAS TO GASOLINE PLANT	05/16/2014 ACT	heaters (5)	24.3	MMBTU/H	Particulate matter, total < 2.5 Âµ (TPM2.5)	clean fuel and good combustion practices	3.38	T/YR	
TX-0663	JACKSON COUNTY GAS PLANT	05/25/2012 ACT	Heaters	17	MMBTU/H	Particulate matter, filterable (FPM)	Good combustion practices and fuel selection	0		
TX-0663	JACKSON COUNTY GAS PLANT	05/25/2012 ACT	Heaters	48	MMBTU/H	Particulate matter, filterable (FPM)	Best Combustion Practices	0		
TX-0663	JACKSON COUNTY GAS PLANT	05/25/2012 ACT	Heaters	10	MMBTU/H	Particulate matter, filterable (FPM)	Good combustion practices and fuel selection	0		
TX-0663	JACKSON COUNTY GAS PLANT	05/25/2012 ACT	Heaters	3	MMBTU/H	Particulate matter, filterable (FPM)	Good combustion practices and fuel selection	0		
TX-0691	PH ROBINSON ELECTRIC GENERATING STATIO	05/20/2014 ACT	fuel gas heater	18	MMBTU/H	Particulate matter, total < 2.5 Âµ (TPM2.5)		0		
TX-0694	INDECK WHARTON ENERGY CENTER	02/02/2015 ACT	heater	3	MMBTU/H	Particulate matter, total < 2.5 Âµ (TPM2.5)		0		

RBLC SUMMARY FOR HEATERS - CO_2e										
RBLCID	FACILITY_NAME	PERMIT_ISSUANCE_DATE	PROCESS_NAME	THROUGHPUT	THROUGHPUT_UNIT	POLLUTANT	CONTROL_METHOD_DESCRIPTION	EMISSION_LIMIT_1	EMISSION_LIMIT_1_UNIT	EMISSION_LIMIT_1_AVG_TIME_CONDITION
AK-0083	KENAI NITROGEN OPERATIONS	01/06/2015 ACT	Startup Heater	101	MMBTU/H	Carbon Dioxide Equivalent (CO2e)	Limited Use (200 hr/yr)	59.61	TONS/MMCF	
*AR-0159	BIG RIVER STEEL LLC	04/05/2019 ACT	SMALL HEATERS AND DRYERS SN-10 through SN-13	0		Carbon Dioxide Equivalent (CO2e)	GOOD OPERATING PRACTICES	117	LB/MMBTU	
IA-0106	CF INDUSTRIES NITROGEN, LLC - PORT NEAL NITROGEN	07/12/2013 ACT	Startup Heater	58.8	MMBTU/H	Carbon Dioxide Equivalent (CO2e)	good operating practices & use of natural gas	345	TONS/YR	ROLLING TWELVE (12) MONTH TOTAL
IA-0107	MARSHALLTOWN GENERATING STATION	04/14/2014 ACT	dew point heater	13.32	mmBtu/hr	Carbon Dioxide Equivalent (CO2e)		6860	TONS	12-MONTH ROLLING TOTAL
IA-0107	MARSHALLTOWN GENERATING STATION	04/14/2014 ACT	dew point heater	13.32	mmBtu/hr	Carbon Dioxide Equivalent (CO2e)		6860	TONS	12-MONTH ROLLING TOTAL
IL-0129	CPV THREE RIVERS ENERGY CENTER	07/30/2018 ACT	Fuel Heater	12.8	mmBtu/hr	Carbon Dioxide Equivalent (CO2e)	Good combustion practice	6600	TON/YR	12-MONTH ROLLING AVERAGE
*IL-0130	JACKSON ENERGY CENTER	12/31/2018 ACT	Fuel Heater	13	mmBtu/hour	Carbon Dioxide Equivalent (CO2e)	Good combustion practice	6700	TONS/YEAR	12-MONTH ROLLING AVERAGE
LA-0271	PLAQUEMINE NGL FRACTIONATION PLANT	05/24/2013 ACT	Heat Medium Oil (HMO) Heaters (HMO-01 & HMO-02)	177	MMBTU/H	Carbon Dioxide Equivalent (CO2e)	Improved combustion measures: heater tuning, optimization, and installatic	0		
LA-0271	PLAQUEMINE NGL FRACTIONATION PLANT	05/24/2013 ACT	Mol Sieve Dehy Regen Heater (H-01)	30	MMBTU/H	Carbon Dioxide Equivalent (CO2e)	Improved combustion measures: heater tuning, optimization, and installatic	0		
LA-0272	AMMONIA PRODUCTION FACILITY	03/27/2013 ACT	AMMONIA START-UP HEATER (102-B)	59.4	MM BTU/HR	Carbon Dioxide Equivalent (CO2e)	Energy efficiency measures: use of economizers and boiler insulation; impro	1738	TPY	ANNUAL MAXIMUM
LA-0305	LAKE CHARLES METHANOL FACILITY	06/30/2016 ACT	Auxiliary Boilers and Superheaters	0		Carbon Dioxide Equivalent (CO2e)	good equipment design and good combustion practices	0		
LA-0307	MAGNOLIA LNG FACILITY	03/21/2016 ACT	Regenerative Heaters	7.37	mm btu/hr	Carbon Dioxide Equivalent (CO2e)	good combustion/operating/maintenance practices and fueled by natural ga	0		
LA-0311	DONALDSONVILLE NITROGEN COMPLEX	07/15/2013 ACT	No. 6 Ammonia Plant Start-up Heater (4-13, EQT 158)	94.5	MM Btu/hr	Carbon Dioxide Equivalent (CO2e)	Use of natural gas as fuel, good combustion practices, and good heater desi	117	LB/MM BTU	ANNUAL AVERAGE
*LA-0315	G2G PLANT	05/23/2014 ACT	Reactor Charge Heater - 53B001	10.1	MMBTU/HR	Carbon Dioxide Equivalent (CO2e)	Energy Efficiency Measures	0		
*LA-0315	G2G PLANT	05/23/2014 ACT	Regeneraton Heater - 51B001	61	MMBTU/HR	Carbon Dioxide Equivalent (CO2e)	Energy Efficiency Measures	0		
*LA-0315	G2G PLANT	05/23/2014 ACT	Recycle Gas Heater - 51B002A	33	MMBTU/HR	Carbon Dioxide Equivalent (CO2e)	Energy Efficiency Measures	0		
*LA-0315	G2G PLANT	05/23/2014 ACT	Recycle Gas Heater - 51B002B	33	MMBTU/HR	Carbon Dioxide Equivalent (CO2e)	Energy Efficiency Measures	0		
*LA-0315	G2G PLANT	05/23/2014 ACT	Recycle Gas Heater - 51B002C	33	MMBTU/HR	Carbon Dioxide Equivalent (CO2e)	Energy Efficiency Measures	0		
*LA-0315	G2G PLANT	05/23/2014 ACT	Recycle Gas Heater - 51B002D	33	MMBTU/HR	Carbon Dioxide Equivalent (CO2e)	Energy Efficiency Measures	0		
*LA-0315	G2G PLANT	05/23/2014 ACT	Recycle Gas Heater - 51B002E	33	MMBTU/HR	Carbon Dioxide Equivalent (CO2e)	Energy Efficiency Measures	0		
MI-0406	RENAISSANCE POWER LLC	11/01/2013 ACT	EU-HEATERSC: Natural gas-fired fuel heater used for heating natural gas pr	20	MMBTU/H	Carbon Dioxide Equivalent (CO2e)	Good combustion practices	10943	T/YR	TEST PROTOCOL
MI-0410	THETFORD GENERATING STATION	07/25/2013 ACT	FG-FUELHTRS: 2 natural gas fuel heaters, 12 MMBTU/H each	12	MMBTU/H heat input each fuel heater	Carbon Dioxide Equivalent (CO2e)	Efficient combustion; energy efficiency.	6156	T/YR	12-MO ROLLTIME PERIOD
MI-0412	HOLLAND BOARD OF PUBLIC WORKS - EAST 5TH STREE	12/04/2013 ACT	Fuel pre-heater (EUFUELHTR)	3.7	MMBTU/H	Carbon Dioxide Equivalent (CO2e)	Good combustion practices	1934	T/YR	12-MO ROLLING TIME PERIOD
MI-0421	GRAYLING PARTICLEBOARD	08/26/2016 ACT	EUTOH (In FGTOH)--Thermal Oil Heater	34	MMBTU/H	Carbon Dioxide Equivalent (CO2e)	Good combustion and maintenance practices, natural gas only.	17438	T/YR	BASED UPON A 12-MO ROLLING TIME PERIOD
MI-0423	INDECK NILES, LLC	01/04/2017 ACT	FGFUELHTR (Two fuel pre-heaters identified as EUFUELHTR1 & EUFUE	27	MMBTU/H	Carbon Dioxide Equivalent (CO2e)	Energy efficiency measures and the use of a low carbon fuel (pipeline quality	13848	T/YR	12-MO ROLLING TIME PERIOD; COMBINED LIMI
MI-0424	HOLLAND BOARD OF PUBLIC WORKS - EAST 5TH STREE	12/05/2016 ACT	EUFUELHTR (Fuel pre-heater)	3.7	MMBTU/H	Carbon Dioxide Equivalent (CO2e)	Good combustion practices.	1934	T/YR	12-MO ROLLING TIME PERIOD
MI-0435	BELLE RIVER COMBINED CYCLE POWER PLANT	07/16/2018 ACT	EUFUELHTR1: Natural gas fired fuel heater	20.8	MMBTU/H	Carbon Dioxide Equivalent (CO2e)	Natural gas fuel	6310	T/YR	12-MO ROLLING TIME PERIOD
MI-0435	BELLE RIVER COMBINED CYCLE POWER PLANT	07/16/2018 ACT	EUFUELHTR2: Natural gas fired fuel heater	3.8	MMBTU/H	Carbon Dioxide Equivalent (CO2e)	Natural gas fuel	6310	T/YR	12-MONTH ROLLING TIME PERIOD
*MI-0440	MICHIGAN STATE UNIVERSITY	05/22/2019 ACT	FGFUELHEATERS	25	MMBTU/H	Carbon Dioxide Equivalent (CO2e)	Utilize low-carbon fuels and implement energy efficiency measures and pre	12822	T/YR	12-MO ROLLING TIME PERIOD; EACH UNIT
MS-0092	EMBERCLEAR GTL MS	05/08/2014 ACT	Regeneration Heater, methanol to gasoline	13	MMBTU/H	Carbon Dioxide Equivalent (CO2e)		0		
MS-0092	EMBERCLEAR GTL MS	05/08/2014 ACT	Reactor Heater, 5	12	MMBTU/H	Carbon Dioxide Equivalent (CO2e)		0		
OH-0355	GENERAL ELECTRIC AVIATION, EVENDALE PLANT	05/07/2013 ACT	4 Indirect-Fired Air Preheaters	0		Carbon Dioxide Equivalent (CO2e)		74000	T/YR	TOTAL FOR 2 TEST CELLS AND 4 PREHEATERS
OH-0368	PALLAS NITROGEN LLC	04/19/2017 ACT	Startup Heater (B001)	100	MMBTU/H	Carbon Dioxide Equivalent (CO2e)	Good combustion control (i.e., high temperatures, sufficient excess air, suffi	2840	T/YR	PER ROLLING 12 MONTH PERIOD
OH-0368	PALLAS NITROGEN LLC	04/19/2017 ACT	Primary Reformer Heater (B002)	740	MMBTU/H	Carbon Dioxide Equivalent (CO2e)	use of low-carbon fuels (natural gas and/or tail gas) and periodic burner tun	383584	T/YR	PER ROLLING 12 MONTH PERIOD
OH-0374	GUERNSEY POWER STATION LLC	10/23/2017 ACT	Fuel Gas Heaters (2 identical, P007 and P008)	15	MMBTU/H	Carbon Dioxide Equivalent (CO2e)	Natural gas, low-emitting fuel	7695	T/YR	PER ROLLING 12 MONTH PERIOD
OH-0379	PETMIN USA INCORPORATED	02/06/2019 ACT	Process gas heater (P001)	218.9	MMBTU/H	Carbon Dioxide Equivalent (CO2e)	Good combustion practices and the use of natural gas	25830.2	LB/H	
OH-0379	PETMIN USA INCORPORATED	02/06/2019 ACT	Ladle Preheaters (P002, P003 and P004)	15	MMBTU/H	Carbon Dioxide Equivalent (CO2e)	Good combustion practices and the use of natural gas	1764	LB/H	
OK-0164	MIDWEST CITY AIR DEPOT	01/08/2015 ACT	Heaters/Boilers	0	MMBTUH	Carbon Dioxide Equivalent (CO2e)	2. Good Combustion Practices.	153716	TONS PER YEAR	TOTAL FOR ALL UNITS.
OK-0173	CMC STEEL OKLAHOMA	01/19/2016 ACT	Heaters (Gas-Fired)	0		Carbon Dioxide Equivalent (CO2e)	Natural Gas Fuel	120	LB/MMBTU	
PA-0311	MOXIE FREEDOM GENERATION PLANT	09/01/2015 ACT	Fuel Gas Heater	0		Carbon Dioxide Equivalent (CO2e)		7845	TPY	12-MONTH ROLLING BASIS
TX-0634	LONE STAR NGL, MONT BELVIEU GAS PLANT	10/12/2012 ACT	FRAC I and II Hot Oil Heaters	270	MMBTU/H	Carbon Dioxide Equivalent (CO2e)		138078	T/YR	12-MONTH ROLLING BASIS
TX-0634	LONE STAR NGL, MONT BELVIEU GAS PLANT	10/12/2012 ACT	Molecular Sieve Regeneration Heater	0		Carbon Dioxide Equivalent (CO2e)		23501	T/YR	365-DAY ROLLING AVERAGE
TX-0746	NUEVO MIDSTREAM, RAMSEY GAS PLANT	11/18/2014 ACT	Regeneration Heater	36	MMBTU/H	Carbon Dioxide Equivalent (CO2e)		168.3	LB CO2/MMSCF	12-MONTH ROLLING WITH MSS
TX-0746	NUEVO MIDSTREAM, RAMSEY GAS PLANT	11/18/2014 ACT	Hot Oil Heater	60	MMBTU/H	Carbon Dioxide Equivalent (CO2e)		280.5	LB CO2/MMSCFD PROCES	12-MONTH ROLLING AVERAGE WITH MSS
TX-0757	INDECK WHARTON ENERGY CENTER	05/12/2014 ACT	Pipeline Heater	3	MMBtu/hr (HHV)	Carbon Dioxide Equivalent (CO2e)		624.78	TPY CO2E	12-MONTH ROLLING TOTAL
TX-0758	ECTOR COUNTY ENERGY CENTER	08/01/2014 ACT	Dew-Point Heater	9	MMBTU/H	Carbon Dioxide Equivalent (CO2e)		2631	TPY CO2E	12-MONTH ROLLING TOTAL
TX-0845	ARKEMA BEAUMONT PLANT	08/24/2018 ACT	HEATERS	31	BTU/HR	Carbon Dioxide Equivalent (CO2e)	low carbon fuel selection, and good combustion practices	0		
WI-0266	GREEN BAY PACKAGING, INC. - SHIPPING CONTAINER D	09/06/2018 ACT	Space heaters (process P53)	40	mmBtu/hr	Carbon Dioxide Equivalent (CO2e)	Good combustion practices, use only natural gas, equip with Low NOx burne	0		
*WI-0292	GREEN BAY PACKAGING INC. â€"MILL DIVISION	04/01/2019 ACT	P44 Space Heaters	20	mmBTU/hr	Carbon Dioxide Equivalent (CO2e)	Good Combustion Practices, the Use of Low-NOx Burners	0		
WY-0076	ROCK SPRINGS FERTILIZER COMPLEX	07/01/2014 ACT	Startup Heater	16	MMBTU/H	Carbon Dioxide Equivalent (CO2e)	limited to 200 hours of operation per year	187	T/YR	ANNUAL

4. FLARES (RLBC CODES 19.330 & 19.390)

RBLC SUMMARY FOR FLARES - NO_x										
RBLCID	FACILITY_NAME	PERMIT_ISSUANCE_DATE	PROCESS_NAME	THROUGHPUT	THROUGHPUT_UNIT	POLLUTANT	CONTROL_METHOD_DESCRIPTION	EMISSION_LIMIT_1	EMISSION_LIMIT_1_UNIT	EMISSION_LIMIT_1_AVG_TIME_CONDITION
CA-1235	PHOENIX ENERGY, LLC-CAREAGA LEASE	08/28/2009 ACT	Ultra low NOx burner- Horizontal Enclosed Flare	0		Nitrogen Oxides (NOx)	Forced draft enclosed flare	0.0146	LB/MMBTU	40 MIN.
NM-0052	ZIA II GAS PLANT	04/25/2014 ACT	Units FL1 & FL2: Refinery Flares (Inlet Gas Flare &	2.3	mmBtu/hr	Nitrogen Oxides (NOx)	NOx, CO, PM10, PM2.5, SO2 controlled through Good Combustion Practices (GCP), pipeline quality natural gas for pilot; limits	695.2	PPH	
*TX-0861	BUCKEYE TEXAS PROCESSING CORPUS CHRISTI FACILITY	08/29/2019 ACT	FLARE	0		Nitrogen Oxides (NOx)	GOOD COMBUSTION PRACTICES	0		
AK-0076	POINT THOMSON PRODUCTION FACILITY	08/20/2012 ACT	Combustion (Flares)	35	MMscf/yr	Nitrogen Oxides (NOx)		0.068	LB/MMBTU	
CA-1187	PETROROCK- TUNNELL LEASE	01/24/2012 ACT	Enclosed Ground Flare	17	MMBTU/H	Nitrogen Oxides (NOx)	Burner design, premix, and combustion temperature control	15	PPMVD@3% O2	40 MINUTES
FL-0333	HARVEST ENERGY GARDEN - ORLANDO	07/05/2012 ACT	Open Utility Flare rated at 1200 scfm	0		Nitrogen Oxides (NOx)	Good combustion practices will be utilized at all times to ensure emissions from the flare system are minimized.	39	TONS PER YEAR	
FL-0347	ANADARKO PETROLEUM CORPORATION - EGOM	09/16/2014 ACT	Boom Flare	0		Nitrogen Oxides (NOx)	Use of good combustion practices and proper flare maintenance	0		
IN-0166	INDIANA GASIFICATION, LLC	06/27/2012 ACT	SYNGAS HYDROCARBON FLARE	0.27	MMBTU/H	Nitrogen Oxides (NOx)	FLARING MINIMIZATION PLAN	43.09	LB/H	3 HR
IN-0166	INDIANA GASIFICATION, LLC	06/27/2012 ACT	ACID GAS FLARE	0.27	MMBTU	Nitrogen Oxides (NOx)	PROCESS FLARING MINIMIZATION PRACTICES	0		
IN-0263	MIDWEST FERTILIZER COMPANY LLC	03/23/2017 ACT	AMMONIA STORAGE FLARE (EU-016)	1.1	MMBTU/H	Nitrogen Oxides (NOx)		125	LB/H	WHILE VENTING 3 HOUR AVG.
IN-0263	MIDWEST FERTILIZER COMPANY LLC	03/23/2017 ACT	FRONT END FLARE EU-017	1.12	MMBTU/H	Nitrogen Oxides (NOx)		0.068	LB/MMBTU	NORMAL OPS. 3 HR AVG.
IN-0263	MIDWEST FERTILIZER COMPANY LLC	03/23/2017 ACT	BACK END FLARE (EU-018)	1.12	MMBTU/H	Nitrogen Oxides (NOx)		0.068	LB/MMBTU	NORMAL OPS. 3 HR AVG.
*KS-0034	ABENGOA BIOENERGY BIOMASS OF KANSAS (ABBK)	05/27/2014 ACT	Biogas Flare	0		Nitrogen Oxides (NOx)	Low NOx Burner	0.33	LB/HR	
LA-0248	DIRECT REDUCTION IRON PLANT	01/27/2011 ACT	DRI-110 - DRI Unit No. 1 Hot Flare	1180	acfm	Nitrogen Oxides (NOx)	A low-NOX fuel is one which results in a lower generation rate of NOX over traditional fossil fuels, on an equal energy basis. D	1.27	LB/H	
LA-0248	DIRECT REDUCTION IRON PLANT	01/27/2011 ACT	DRI-210 - DRI Unit No. 1 Hot Flare	1180	acfm	Nitrogen Oxides (NOx)	A low-NOX fuel is one which results in a lower generation rate of NOX over traditional fossil fuels, on an equal energy basis. D	1.27	LB/H	
LA-0257	SABINE PASS LNG TERMINAL	12/06/2011 ACT	Marine Flare	1590	MMBTU/H	Nitrogen Oxides (NOx)	proper plant operations and maintain the presence of the flame when the gas is routed to the flare	185.16	LB/H	HOURLY MAXIMUM
LA-0257	SABINE PASS LNG TERMINAL	12/06/2011 ACT	Wet/Dry Gas Flares (4)	0.26	MMBTU/H	Nitrogen Oxides (NOx)	proper plant operations and maintain the presence of the flame when the gas is routed to the flare	0.03	LB/H	HOURLY MAXIMUM
LA-0307	MAGNOLIA LNG FACILITY	03/21/2016 ACT	flares	7.33	kg/hr	Nitrogen Oxides (NOx)	good combustion practices	0		
*LA-0312	ST. JAMES METHANOL PLANT	06/30/2017 ACT	FL1-13-SUSD - Process Flare Startup/Shutdown (EQT0	4789	MMBTU/hr	Nitrogen Oxides (NOx)	Compliance with NESHAP Subpart A for flare performance standards. Correct Flare Design and Proper Combustion.	0		
*LA-0312	ST. JAMES METHANOL PLANT	06/30/2017 ACT	FL1-13 - Process Flare (EQT0008)	2.17	MMBTU/hr	Nitrogen Oxides (NOx)	Compliance with NESHAP Subpart A for flare performance standards. Correct Flare Design and Proper Combustion.	12.82	LB/HR	
*LA-0315	G2G PLANT	05/23/2014 ACT	Flare Pilot Burner	1.46	MMBTU/HR	Nitrogen Oxides (NOx)	Proper burner design and operation	0.14	LB/H	HOURLY MAXIMUM
LA-0316	CAMERON LNG FACILITY	02/17/2017 ACT	Flares (3 units)	0		Nitrogen Oxides (NOx)	proper plant operations and maintaining the presence of the flame at the flare tips when vent gas is routed to the flares	0		
LA-0331	CALCASIEU PASS LNG PROJECT	09/21/2018 ACT	Flares (WRMFLR, CLDFLR, LPFLR)	21.74	MM BTU/h	Nitrogen Oxides (NOx)	Proper equipment design, proper operation, and good combustion practices.	0.068	LB/MM BTU	
LA-0331	CALCASIEU PASS LNG PROJECT	09/21/2018 ACT	Marine Loading Flare	0.31	MM BTU/h	Nitrogen Oxides (NOx)	Proper equipment design, proper operation, and good combustion practices.	0.068	LB/MM BTU	
MD-0044	COVE POINT LNG TERMINAL	06/09/2014 ACT	NORTH FLARE	0.1	MMBTU/H	Nitrogen Oxides (NOx)	MAINTAIN A PILOT FLAME AT ALL TIMES, MAINTAIN PROPER COMBUSTION EFFICIENCY, AND DESIGNED TO ACHIEVE EMISSIO	69	TONS	12-MONTH ROLLING BASIS
MD-0044	COVE POINT LNG TERMINAL	06/09/2014 ACT	SOUTH FLARE	0.01	MMBTU/H	Nitrogen Oxides (NOx)	MAINTAIN A PILOT FLAME AT ALL TIMES, MAINTAIN PROPER COMBUSTION EFFICIENCY, AND DESIGNED TO ACHIEVE EMISSIO	41	T/YR	12-MONTH ROLLING BASIS
SC-0183	NUCOR STEEL - BERKELEY	05/04/2018 ACT	Vacuum Tank Degasser Equipment (vaccum tank deg	0		Nitrogen Oxides (NOx)		0		
TX-0802	BAYTOWN 3	06/24/2016 ACT	Flares	0		Nitrogen Oxides (NOx)		7.12	T/YR	
TX-0804	ADN UNIT	07/15/2016 ACT	Flare	0		Nitrogen Oxides (NOx)	Good combustion control, The flare must follow 40 CFR 60.18	3.65	T/YR	

RBLC SUMMARY FOR FLARES - CO										
RBLCID	FACILITY_NAME	PERMIT_ISSUANCE_DATE	PROCESS_NAME	THROUGHPUT	THROUGHPUT_UNIT	POLLUTANT	CONTROL_METHOD_DESCRIPTION	EMISSION_LIMIT_1	EMISSION_LIMIT_1_UNIT	EMISSION_LIMIT_1_AVG_TIME_CONDITION
CA-1235	PHOENIX ENERGY, LLC-CAREAGA LEASE	08/28/2009 ACT	Ultra low NOx burner- Horizontal Enclosed Flare	0		Carbon Monoxide	forced draft enclosed flare	0.0371	LB/MMBTU	40 MIN.
NM-0052	ZIA II GAS PLANT	04/25/2014 ACT	Units FL1 & FL2: Refinery Flares (Inlet Gas Flare 8	2.3	mmBtu/hr	Carbon Monoxide	NOx, CO, PM10, PM2.5, SO2 controlled through Good Combustion Practices (GCP),	3782.5	PPH	
TX-0832	EXXONMOBIL BEAUMONT REFINERY	01/09/2018 ACT	No.12 flare	0		Carbon Monoxide	Meets 40 CFR 60.18 and MACT CC design requirements	94	TON/YR	
AK-0076	POINT THOMSON PRODUCTION FACILITY	08/20/2012 ACT	Combustion (Flares)	35	MMscf/yr	Carbon Monoxide		0.37	LB/MMBTU	
FL-0347	ANADARKO PETROLEUM CORPORATION - EGOM	09/16/2014 ACT	Boom Flare	0		Carbon Monoxide	Use of good combustion practices and proper flare maintenance	0		
IN-0166	INDIANA GASIFICATION, LLC	06/27/2012 ACT	SYNGAS HYDROCARBON FLARE	0.27	MMBTU/H	Carbon Monoxide	PROPER DESIGN AND OPERATION FLARE MINIMIZATION PLAN	172.4	LB/H	3 HR
IN-0166	INDIANA GASIFICATION, LLC	06/27/2012 ACT	ACID GAS FLARE	0.27	MMBTU	Carbon Monoxide	FLARE DESIGN/OPS: FLARE MINIMIZATION PLAN	0		
IN-0263	MIDWEST FERTILIZER COMPANY LLC	03/23/2017 ACT	AMMONIA STORAGE FLARE (EU-016)	1.1	MMBTU/H	Carbon Monoxide		0.37	LB/MMBTU	NORMAL OPERATION 3 HR AVG.
IN-0263	MIDWEST FERTILIZER COMPANY LLC	03/23/2017 ACT	FRONT END FLARE EU-017	1.12	MMBTU/H	Carbon Monoxide		0.37	LB/MMBTU	NORMAL OPS. 3 HR AVG.
IN-0263	MIDWEST FERTILIZER COMPANY LLC	03/23/2017 ACT	BACK END FLARE (EU-018)	1.12	MMBTU/H	Carbon Monoxide		0.37	LB/MMBTU	NORMAL OPS. 3 HR AVG.
*KS-0034	ABENGOA BIOENERGY BIOMASS OF KANSAS (ABBK)	05/27/2014 ACT	Biogas Flare	0		Carbon Monoxide	Good Combustion Practices	1.76	LB/HR	
LA-0248	DIRECT REDUCTION IRON PLANT	01/27/2011 ACT	DRI-110 - DRI Unit No. 1 Hot Flare	1180	acfm	Carbon Monoxide	The reducing gas is rich in carbon monoxide and hydrogen. The pilot for the flare is	1.47	LB/H	
LA-0248	DIRECT REDUCTION IRON PLANT	01/27/2011 ACT	DRI-210 - DRI Unit No. 1 Hot Flare	1180	acfm	Carbon Monoxide	The reducing gas is rich in carbon monoxide and hydrogen. The pilot for the flare is	1.27	LB/H	
LA-0257	SABINE PASS LNG TERMINAL	12/06/2011 ACT	Marine Flare	1590	MMBTU/H	Carbon Monoxide	proper plant operations and maintain the presence of the flame when the gas is rou	705.49	LB/H	HOURLY MAXIMUM
LA-0257	SABINE PASS LNG TERMINAL	12/06/2011 ACT	Wet/Dry Gas Flares (4)	0.26	MMBTU/H	Carbon Monoxide	proper plant operations and maintain the presence of the flame when the gas is rou	0.11	LB/H	HOURLY MAXIMUM
LA-0307	MAGNOLIA LNG FACILITY	03/21/2016 ACT	flares	7.33	kg/hr	Carbon Monoxide	good combustion practices	0		
*LA-0312	ST. JAMES METHANOL PLANT	06/30/2017 ACT	FL1-13-SUSD - Process Flare Startup/Shutdown (EQT0	4789	MMBTU/hr	Carbon Monoxide	Compliance with NESHAP Subpart A for flare performance standards. Correct Flare	0		
*LA-0312	ST. JAMES METHANOL PLANT	06/30/2017 ACT	FL1-13 - Process Flare (EQT0008)	2.17	MMBTU/hr	Carbon Monoxide	Compliance with NESHAP Subpart A for flare performance standards. Correct Flare	58.44	LB/HR	
*LA-0315	G2G PLANT	05/23/2014 ACT	Flare Pilot Burner	1.46	MMBTU/HR	Carbon Monoxide	Proper burner design and operation	0.12	LB/H	HOURLY MAXIMUM
LA-0316	CAMERON LNG FACILITY	02/17/2017 ACT	Flares (3 units)	0		Carbon Monoxide	proper plant operations and maintaining the presence of the flame at the flare tips	0		
LA-0331	CALCASIEU PASS LNG PROJECT	09/21/2018 ACT	Flares (WRMFLR, CLDFLR, LPFLR)	21.74	MM BTU/h	Carbon Monoxide	Proper equipment design, proper operation, and good combustion practices.	0.31	LB/MM BTU	
LA-0331	CALCASIEU PASS LNG PROJECT	09/21/2018 ACT	Marine Loading Flare	0.31	MM BTU/h	Carbon Monoxide	Proper equipment design, proper operation, and good combustion practices.	0.31	LB/MM BTU	
MD-0044	COVE POINT LNG TERMINAL	06/09/2014 ACT	NORTH FLARE	0.1	MMBTU/H	Carbon Monoxide	MAINTAIN A PILOT FLAME AT ALL TIMES, MAINTAIN PROPER COMBUSTION EFFICIE	31.2	TONS	12-MONTH ROLLING BASIS
MD-0044	COVE POINT LNG TERMINAL	06/09/2014 ACT	SOUTH FLARE	0.01	MMBTU/H	Carbon Monoxide	MAINTAIN A PILOT FLAME AT ALL TIMES, MAINTAIN PROPER COMBUSTION EFFICIE	18.4	T/YR	12-MONTH ROLLING BASIS
OK-0142	WAYNOKA NATURAL GAS PROCESSING PLANT	01/17/2012 ACT	Flare, Amine Unit	0		Carbon Monoxide		0		
OK-0142	WAYNOKA NATURAL GAS PROCESSING PLANT	01/17/2012 ACT	Flares, Plant	0		Carbon Monoxide	Flare - Comply w/NSPS 60.18	0		
SC-0183	NUCOR STEEL - BERKELEY	05/04/2018 ACT	Vacuum Tank Degasser Equipment (vaccum tank dega	0		Carbon Monoxide		0		
TX-0684	ENTERPRISE MONT BELVIEU COMPLEX	11/14/2012 ACT	Flare	0		Carbon Monoxide	proper flare design and operation in accordance with NSPS 60.18	41.21	LB/H	
TX-0804	ADN UNIT	07/15/2016 ACT	Flare	0		Carbon Monoxide	Good combustion control	10.51	T/YR	
TX-0827	PRAXAIR CLEAR LAKE PLANT	10/19/2017 ACT	HyCO Flare	0		Carbon Monoxide	Meet the design and operating requirements of 40 CFR 60.18	609	T/YR	
TX-0830	PRAXIAR CLEAR LAKE	10/20/2017 ACT	HYCO FLARE	0		Carbon Monoxide	Meet the design and operating requirements of 40 CFR 60.18	609.2	TON/YR	

RBLC SUMMARY FOR FLARES - VOC										
RBLCID	FACILITY_NAME	PERMIT_ISSUANCE_DATE	PROCESS_NAME	THROUGHPU	THROUGHPUT_UNIT	POLLUTANT	CONTROL_METHOD_DESCRIPTION	EMISSION_LIMIT_1	EMISSION_LIMIT_1_UNIT	EMISSION_LIMIT_1_AVG_TIME_CONDITION
CA-1235	PHOENIX ENERGY, LLC-CAREAGA LEASE	08/28/2009 ACT	Ultra low NOx burner- Horizontal Enclosed Flare	0		Volatile Organic Compounds (VOC)	forced draft enclosed flare	0.0013	LB/MMBTU	40 MIN.
NM-0052	ZIA II GAS PLANT	04/25/2014 ACT	Units FL1 & FL2: Refinery Flares (Inlet Gas Flare	2.3	mmBtu/hr	Volatile Organic Compounds (VOC)	NOx, CO, PM10, PM2.5, SO2 controlled through Good Combustion Practices (GCP), pipeline quali	2558.4	PPH	
TX-0812	CRUDE OIL PROCESSING FACILITY	10/31/2016 ACT	Refinery Flares	0		Volatile Organic Compounds (VOC)	The flare must conform to 40 CFR Â§ 60.18 requirements. Vent stream composition and flow mu	0		
TX-0835	CHANNELVIEW TERMINAL	04/13/2018 ACT	PROCESS VENTS TO FLARE	10410100	SCF/YR	Volatile Organic Compounds (VOC)	The flare designed to meet 40 CFR Â§60.18 with a VOC DRE of 98% for compounds with four carb	0		
*TX-0861	BUCKEYE TEXAS PROCESSING CORPUS CHRISTI FACILITY	08/29/2019 ACT	FLARE	0		Volatile Organic Compounds (VOC)	GOOD COMBUSTION PRACTICES	0		
CA-1187	PETROROCK- TUNNELL LEASE	01/24/2012 ACT	Enclosed Ground Flare	17	MMBTU/H	Volatile Organic Compounds (VOC)	Burner design, premix, and combustion temperature control	10	PPMVD@3% O2	40 MINUTES
FL-0347	ANADARKO PETROLEUM CORPORATION - EGOM	09/16/2014 ACT	Boom Flare	0		Volatile Organic Compounds (VOC)	Use of good combustion practices and proper flare maintenance	0		
IN-0263	MIDWEST FERTILIZER COMPANY LLC	03/23/2017 ACT	AMMONIA STORAGE FLARE (EU-016)	1.1	MMBTU/H	Volatile Organic Compounds (VOC)		0.0054	LB/MMBTU	NORMAL OPERATIONS 3 HR AVG.
IN-0263	MIDWEST FERTILIZER COMPANY LLC	03/23/2017 ACT	FRONT END FLARE EU-017	1.12	MMBTU/H	Volatile Organic Compounds (VOC)		0.0054	LB/MMBTU	NORMAL OPS. 3 HR AVG
IN-0263	MIDWEST FERTILIZER COMPANY LLC	03/23/2017 ACT	BACK END FLARE (EU-018)	1.12	MMBTU/H	Volatile Organic Compounds (VOC)		0.0054	LB/MMBTU	NORMAL OPS. 3 HR AVG.
*KS-0034	ABENGOA BIOENERGY BIOMASS OF KANSAS (ABBK)	05/27/2014 ACT	Biogas Flare	0		Volatile Organic Compounds (VOC)	Good Combustion Practices	0.14	LB/HR	
LA-0257	SABINE PASS LNG TERMINAL	12/06/2011 ACT	Marine Flare	1590	MMBTU/H	Volatile Organic Compounds (VOC)	proper plant operations and maintain the presence of the flame when the gas is routed to the fla	10.83	LB/H	HOURLY MAXIMUM
LA-0257	SABINE PASS LNG TERMINAL	12/06/2011 ACT	Wet/Dry Gas Flares (4)	0.26	MMBTU/H	Volatile Organic Compounds (VOC)	proper plant operations and maintain the presence of the flame when the gas is routed to the fla	0.01	LB/H	HOURLY MAXIMUM
LA-0307	MAGNOLIA LNG FACILITY	03/21/2016 ACT	flares	7.33	kg/hr	Volatile Organic Compounds (VOC)	good combustion practices	0		
*LA-0312	ST. JAMES METHANOL PLANT	06/30/2017 ACT	FL1-13-SUSD - Process Flare Startup/Shutdown (EQT	4789	MMBTU/hr	Volatile Organic Compounds (VOC)	Compliance with NESHAP Subpart A for flare performance standards. Correct Flare Design and P	0		
*LA-0312	ST. JAMES METHANOL PLANT	06/30/2017 ACT	FL1-13 - Process Flare (EQT0008)	2.17	MMBTU/hr	Volatile Organic Compounds (VOC)	Compliance with NESHAP Subpart A for flare performance standards. Correct Flare Design and P	22.08	LB/HR	
*LA-0315	G2G PLANT	05/23/2014 ACT	Flare Pilot Burner	1.46	MMBTU/HR	Volatile Organic Compounds (VOC)	Compliance with 40 CFR 63 Subpart A	5.87	LB/H	HOURLY MAXIMUM
LA-0316	CAMERON LNG FACILITY	02/17/2017 ACT	Flares (3 units)	0		Volatile Organic Compounds (VOC)	proper plant operations and maintaining the presence of the flame at the flare tips when vent gas	0		
LA-0331	CALCASIEU PASS LNG PROJECT	09/21/2018 ACT	Flares (WRMFLR, CLDFLR, LPFLR)	21.74	MM BTU/h	Volatile Organic Compounds (VOC)	Proper equipment design, proper operation, and good combustion practices.	0.006	LB/H	
LA-0331	CALCASIEU PASS LNG PROJECT	09/21/2018 ACT	Marine Loading Flare	0.31	MM BTU/h	Volatile Organic Compounds (VOC)	Proper equipment design, proper operation, and good combustion practices.	0.006	LB/H	
MD-0044	COVE POINT LNG TERMINAL	06/09/2014 ACT	NORTH FLARE	0.1	MMBTU/H	Volatile Organic Compounds (VOC)	MAINTAIN A PILOT FLAME AT ALL TIMES, MAINTAIN PROPER COMBUSTION EFFICIENCY, AND DE	10.8	TONS	12-MONTH ROLLING BASIS
MD-0044	COVE POINT LNG TERMINAL	06/09/2014 ACT	SOUTH FLARE	0.01	MMBTU/H	Volatile Organic Compounds (VOC)	MAINTAIN A PILOT FLAME AT ALL TIMES, MAINTAIN PROPER COMBUSTION EFFICIENCY, AND DE	4	T/YR	12-MONTH ROLLING BASIS
SC-0183	NUCOR STEEL - BERKELEY	05/04/2018 ACT	Vacuum Tank Degasser Equipment (vaccum tank deg	0		Volatile Organic Compounds (VOC)		0		
TX-0672	CORPUS CHRISTI LIQUEFACTION PLANT	09/12/2014 ACT	Flares	0		Volatile Organic Compounds (VOC)	Flare is BACT for MSS	0		
TX-0677	FREEPORT LNG LIQUEFACTION PLANT	07/16/2014 ACT	Flare	0		Volatile Organic Compounds (VOC)	Designed to meet 98% DRE for less than C3 and 99% DRE for C3+	0		
TX-0678	FREEPORT LNG PRETREATMENT FACILITY	07/16/2014 ACT	Flare	0		Volatile Organic Compounds (VOC)	Designed for 99% DRE for less than C3 and 99% control for C3+ compounds	0		
TX-0684	ENTERPRISE MONT BELVIEU COMPLEX	11/14/2012 ACT	Flare	0		Volatile Organic Compounds (VOC)	proper flare design and operation in accordance with NSPS 60.18. 99.5% DRE for VOC.	4.75	TPY	
TX-0706	NATURAL GAS FRACTIONATION	01/23/2014 ACT	Emergency Flare	0		Volatile Organic Compounds (VOC)	Emergency Flare will meet 40CFR 60.18 requirements and 98% DRE	0		
TX-0825	PASADENA TERMINAL	07/14/2017 ACT	Portable Flare	0		Volatile Organic Compounds (VOC)	Equipped with flow monitor, continuous flame, and has a destruction rate efficiency of 98%.	1.2	T/YHR	

RBLC SUMMARY FOR FLARES - PM										
RBLCID	FACILITY_NAME	PERMIT_ISSUANCE_DATE	PROCESS_NAME	THROUGHPUT	THROUGHPUT_UNIT	POLLUTANT	CONTROL_METHOD_DESCRIPTION	EMISSION_LIMIT_1	EMISSION_LIMIT_1_UNIT	EMISSION_LIMIT_1_AVG_TIME_CONDITION
*KS-0032	CHS MCPHERSON REFINERY, INC.	12/14/2015 ACT	Main Flare and Alky Flare	0		Particulate matter, total (TPM)		0		
*KS-0032	CHS MCPHERSON REFINERY, INC.	12/14/2015 ACT	Main Flare and Alky Flare	0		Particulate matter, total < 10 Âµ (TPM10)		0		
AK-0076	POINT THOMSON PRODUCTION FACILITY	08/20/2012 ACT	Combustion (Flares)	35	MMscf/yr	Particulate matter, total < 2.5 Âµ (TPM2.5)		0.0264	LB/MMBTU	
FL-0347	ANADARKO PETROLEUM CORPORATION - EGOM	09/16/2014 ACT	Boom Flare	0		Particulate matter, total (TPM)	Use of good combustion practices and proper flare maintenance	0		
IN-0166	INDIANA GASIFICATION, LLC	06/27/2012 ACT	SYNGAS HYDROCARBON FLARE	0.27	MMBTU/H	Particulate matter, filterable (FPM)	PROPER DESIGN AND OPERATION FLARE MINIMIZATION PLAN	3.21	LB/H	3 HR
IN-0166	INDIANA GASIFICATION, LLC	06/27/2012 ACT	SYNGAS HYDROCARBON FLARE	0.27	MMBTU/H	Particulate matter, total < 10 Âµ (TPM10)	PROPER DESIGN AND OPERATION FLARE MINIMIZATION PLAN	3.21	LB/H	3 HR
IN-0166	INDIANA GASIFICATION, LLC	06/27/2012 ACT	SYNGAS HYDROCARBON FLARE	0.27	MMBTU/H	Particulate matter, total < 2.5 Âµ (TPM2.5)	PROPER DESIGN AND OPERATION FLARE MINIMIZATION PLAN	3.01	LB/H	3 HR
IN-0166	INDIANA GASIFICATION, LLC	06/27/2012 ACT	ACID GAS FLARE	0.27	MMBTU	Particulate matter, filterable (FPM)	PROPER DESIGN AND OPERATION FLARE MINIMIZATION PLAN	0		
IN-0166	INDIANA GASIFICATION, LLC	06/27/2012 ACT	ACID GAS FLARE	0.27	MMBTU	Particulate matter, total < 10 Âµ (TPM10)	PROPER DESIGN AND OPERATION FLARE MINIMIZATION PLAN	0		
IN-0166	INDIANA GASIFICATION, LLC	06/27/2012 ACT	ACID GAS FLARE	0.27	MMBTU	Particulate matter, total < 2.5 Âµ (TPM2.5)	PROPER DESIGN AND OPERATION FLARE MINIMIZATION PLAN	0		
IN-0263	MIDWEST FERTILIZER COMPANY LLC	03/23/2017 ACT	AMMONIA STORAGE FLARE (EU-016)	1.1	MMBTU/H	Particulate matter, total < 10 Âµ (TPM10)		0.0075	LB/MMBTU	3 HR AVG.
IN-0263	MIDWEST FERTILIZER COMPANY LLC	03/23/2017 ACT	AMMONIA STORAGE FLARE (EU-016)	1.1	MMBTU/H	Particulate matter, total (TPM)		0.0019	LB/MMBTU	3 HOUR AVERAGE
IN-0263	MIDWEST FERTILIZER COMPANY LLC	03/23/2017 ACT	AMMONIA STORAGE FLARE (EU-016)	1.1	MMBTU/H	Particulate matter, filterable < 2.5 Âµ (FPM2.5)		0.0075	LB/MMBTU	3 HOUR AVERAGE
IN-0263	MIDWEST FERTILIZER COMPANY LLC	03/23/2017 ACT	FRONT END FLARE EU-017	1.12	MMBTU/H	Particulate matter, total (TPM)		1.9	LB/MMCF	3 HR AVG.
IN-0263	MIDWEST FERTILIZER COMPANY LLC	03/23/2017 ACT	FRONT END FLARE EU-017	1.12	MMBTU/H	Particulate matter, total < 10 Âµ (TPM10)		7.6	LB/MMCF	3 HR AVG
IN-0263	MIDWEST FERTILIZER COMPANY LLC	03/23/2017 ACT	FRONT END FLARE EU-017	1.12	MMBTU/H	Particulate matter, total < 2.5 Âµ (TPM2.5)		7.6	LB/MMCF	3 HR AVG
IN-0263	MIDWEST FERTILIZER COMPANY LLC	03/23/2017 ACT	BACK END FLARE (EU-018)	1.12	MMBTU/H	Particulate matter, total (TPM)		0.0019	LB/MMBTU	3 HR AVG
IN-0263	MIDWEST FERTILIZER COMPANY LLC	03/23/2017 ACT	BACK END FLARE (EU-018)	1.12	MMBTU/H	Particulate matter, total < 10 Âµ (TPM10)		0.0075	LB/MMBTU	3 HR AVG.
IN-0263	MIDWEST FERTILIZER COMPANY LLC	03/23/2017 ACT	BACK END FLARE (EU-018)	1.12	MMBTU/H	Particulate matter, total < 2.5 Âµ (TPM2.5)		0.0075	LB/MMBTU	3 HR AVG.
LA-0248	DIRECT REDUCTION IRON PLANT	01/27/2011 ACT	DRI-110 - DRI Unit No. 1 Hot Flare	1180	acfm	Particulate matter, filterable (FPM)	the best available technology for controlling PM10/PM2.5 from the natural gas pilot is goc	0.13	LB/H	
LA-0248	DIRECT REDUCTION IRON PLANT	01/27/2011 ACT	DRI-210 - DRI Unit No. 1 Hot Flare	1180	acfm	Particulate matter, filterable (FPM)	the best available technology for controlling PM10/PM2.5 from the natural gas pilot is goc	0.13	LB/H	
LA-0257	SABINE PASS LNG TERMINAL	12/06/2011 ACT	Marine Flare	1590	MMBTU/H	Particulate matter, total (TPM)	proper plant operations and maintain the presence of the flame when the gas is routed to	14.97	LB/H	HOURLY MAXIMUM
LA-0257	SABINE PASS LNG TERMINAL	12/06/2011 ACT	Wet/Dry Gas Flares (4)	0.26	MMBTU/H	Particulate matter, total (TPM)	proper plant operations and maintain the presence of the flame when the gas is routed to	0.01	LB/H	HOURLY MAXIMUM
LA-0307	MAGNOLIA LNG FACILITY	03/21/2016 ACT	flares	7.33	kg/hr	Particulate matter, total < 10 Âµ (TPM10)	good combustion practices	0		
LA-0307	MAGNOLIA LNG FACILITY	03/21/2016 ACT	flares	7.33	kg/hr	Particulate matter, filterable < 2.5 Âµ (FPM2.5)	good combustion practices	0		
*LA-0312	ST. JAMES METHANOL PLANT	06/30/2017 ACT	FL1-13-SUSD - Process Flare Startup/Shutdown (E	4789	MMBTU/hr	Particulate matter, total < 10 Âµ (TPM10)	Compliance with NESHAP Subpart A for flare performance standards. Correct Flare Desig	0		
*LA-0312	ST. JAMES METHANOL PLANT	06/30/2017 ACT	FL1-13-SUSD - Process Flare Startup/Shutdown (E	4789	MMBTU/hr	Particulate matter, total < 2.5 Âµ (TPM2.5)	Compliance with NESHAP Subpart A for flare performance standards. Correct Flare Desig	0		
*LA-0312	ST. JAMES METHANOL PLANT	06/30/2017 ACT	FL1-13 - Process Flare (EQT0008)	2.17	MMBTU/hr	Particulate matter, total < 10 Âµ (TPM10)	Compliance with NESHAP Subpart A for flare performance standards. Correct Flare Desig	1.41	LB/HR	
*LA-0312	ST. JAMES METHANOL PLANT	06/30/2017 ACT	FL1-13 - Process Flare (EQT0008)	2.17	MMBTU/hr	Particulate matter, total < 2.5 Âµ (TPM2.5)	Compliance with NESHAP Subpart A for flare performance standards. Correct Flare Desig	1.41	LB/HR	
*LA-0315	G2G PLANT	05/23/2014 ACT	Flare Pilot Burner	1.46	MMBTU/HR	Particulate matter, total < 10 Âµ (TPM10)	Proper burner design and operation	0.01	LB/H	HOURLY MAXIMUM
*LA-0315	G2G PLANT	05/23/2014 ACT	Flare Pilot Burner	1.46	MMBTU/HR	Particulate matter, total < 2.5 Âµ (TPM2.5)	Proper burner design and operation	0.01	LB/H	HOURLY MAXIMUM
LA-0316	CAMERON LNG FACILITY	02/17/2017 ACT	Flares (3 units)	0		Particulate matter, total < 10 Âµ (TPM10)	proper plant operations and maintaining the presence of the flame at the flare tips when	0		
LA-0316	CAMERON LNG FACILITY	02/17/2017 ACT	Flares (3 units)	0		Particulate matter, total < 2.5 Âµ (TPM2.5)	proper plant operations and maintaining the presence of the flame at the flare tips when	0		
LA-0331	CALCASIEU PASS LNG PROJECT	09/21/2018 ACT	Flares (WRMFLR, CLDFLR, LPFLR)	21.74	MMBTU/h	Particulate matter, total < 10 Âµ (TPM10)	Proper equipment design, proper operation, and good combustion practices.	0.0074	LB/MM BTU	
LA-0331	CALCASIEU PASS LNG PROJECT	09/21/2018 ACT	Flares (WRMFLR, CLDFLR, LPFLR)	21.74	MMBTU/h	Particulate matter, total < 2.5 Âµ (TPM2.5)	Proper equipment design, proper operation, and good combustion practices.	0.0074	LB/MM BTU	
LA-0331	CALCASIEU PASS LNG PROJECT	09/21/2018 ACT	Marine Loading Flare	0.31	MMBTU/h	Particulate matter, total < 10 Âµ (TPM10)	Proper equipment design, proper operation, and good combustion practices.	0.0074	LB/MM BTU	
LA-0331	CALCASIEU PASS LNG PROJECT	09/21/2018 ACT	Marine Loading Flare	0.31	MMBTU/h	Particulate matter, total < 2.5 Âµ (TPM2.5)	Proper equipment design, proper operation, and good combustion practices.	0.0074	LB/MM BTU	
MD-0044	COVE POINT LNG TERMINAL	06/09/2014 ACT	NORTH FLARE	0.1	MMBTU/H	Particulate matter, filterable (FPM)	MAINTAIN A PILOT FLAME AT ALL TIMES, MAINTAIN PROPER COMBUSTION EFFICIENCY, A	0.7	TONS	12-MONTH ROLLING AVERAGE
MD-0044	COVE POINT LNG TERMINAL	06/09/2014 ACT	NORTH FLARE	0.1	MMBTU/H	Particulate matter, total < 10 Âµ (TPM10)	MAINTAIN A PILOT FLAME AT ALL TIMES, MAINTAIN PROPER COMBUSTION EFFICIENCY, A	2.8	T/YR	12-MONTH ROLLING AVERAGE
MD-0044	COVE POINT LNG TERMINAL	06/09/2014 ACT	NORTH FLARE	0.1	MMBTU/H	Particulate matter, total < 2.5 Âµ (TPM2.5)	MAINTAIN A PILOT FLAME AT ALL TIMES, MAINTAIN PROPER COMBUSTION EFFICIENCY, A	2.8	T/YR	12-MONTH ROLLING AVERAGE
MD-0044	COVE POINT LNG TERMINAL	06/09/2014 ACT	SOUTH FLARE	0.01	MMBTU/H	Particulate matter, filterable (FPM)	MAINTAIN A PILOT FLAME AT ALL TIMES, MAINTAIN PROPER COMBUSTION EFFICIENCY, A	0.4	TONS	12-MONTH ROLLING BASIS
MD-0044	COVE POINT LNG TERMINAL	06/09/2014 ACT	SOUTH FLARE	0.01	MMBTU/H	Particulate matter, total < 10 Âµ (TPM10)	MAINTAIN A PILOT FLAME AT ALL TIMES, MAINTAIN PROPER COMBUSTION EFFICIENCY, A	1.7	T/YR	12-MONTH ROLLING BASIS
MD-0044	COVE POINT LNG TERMINAL	06/09/2014 ACT	SOUTH FLARE	0.01	MMBTU/H	Particulate matter, total < 2.5 Âµ (TPM2.5)	MAINTAIN A PILOT FLAME AT ALL TIMES, MAINTAIN PROPER COMBUSTION EFFICIENCY, A	1.7	T/YR	12-MONTH ROLLING BASIS
SC-0183	NUCOR STEEL - BERKELEY	05/04/2018 ACT	Vacuum Tank Degasser Equipment (vaccum tank (	0		Particulate matter, filterable (FPM)		0		
SC-0183	NUCOR STEEL - BERKELEY	05/04/2018 ACT	Vacuum Tank Degasser Equipment (vaccum tank (	0		Particulate matter, total < 10 Âµ (TPM10)		0		
SC-0183	NUCOR STEEL - BERKELEY	05/04/2018 ACT	Vacuum Tank Degasser Equipment (vaccum tank (	0		Particulate matter, total < 2.5 Âµ (TPM2.5)		0		

RBLC SUMMARY FOR FLARES - CO_2e

RBLCID	FACILITY_NAME	PERMIT_ISSUANCE_DATE	PROCESS_NAME	THROUGHPUT	THROUGHPUT_UNIT	POLLUTANT	CONTROL_METHOD_DESCRIPTION	EMISSION_LIMIT_1	EMISSION_LIMIT_1_UNIT	EMISSION_LIMIT_1_AVG_TIME_CONDITION
NM-0052	ZIA II GAS PLANT	04/25/2014 ACT	Units FL1 & FL2: Refinery Flares (Inlet Gas Flar	2.3	mmBtu/hr	Carbon Dioxide Equivalent (CO2e)	NOx, CO, PM10, PM 2.5, SO2 controlled through Good Combustion Practices (GCP), pipeline quality natural g	5626	PPH	
TX-0832	EXXONMOBIL BEAUMONT REFINERY	01/09/2018 ACT	No.12 flare	0		Carbon Dioxide Equivalent (CO2e)	Meets 40 CFR 60.18 and MACT CC design requirem	2716	TON/YR	
*TX-0861	BUCKEYE TEXAS PROCESSING CORPUS CHRISTI FACILITY	08/29/2019 ACT	FLARE	0		Carbon Dioxide Equivalent (CO2e)	GOOD COMBUSTION PRACTICES	0		
CO-0067	LANCASTER PLANT	06/04/2013 ACT	Two Flares	0		Carbon Dioxide Equivalent (CO2e)	40 CFR 60.18	0		
IN-0186	ABENGOA BIOENERGY OF INDIANA, LLC	06/18/2014 ACT	EMERGENCY FLARE	0.07	MMBTU/H	Carbon Dioxide Equivalent (CO2e)		0		
LA-0257	SABINE PASS LNG TERMINAL	12/06/2011 ACT	Marine Flare	1590	MMBTU/H	Carbon Dioxide Equivalent (CO2e)	proper plant operations and maintain the presence of the flame when the gas is routed to the flare	2909	TONS/YR	ANNUAL MAXIMUM
LA-0257	SABINE PASS LNG TERMINAL	12/06/2011 ACT	Wet/Dry Gas Flares (4)	0.26	MMBTU/H	Carbon Dioxide Equivalent (CO2e)	proper plant operations and maintain the presence of the flame when the gas is routed to the flare	133	TONS/YR	ANNUAL MAXIMUM
LA-0266	EUNICE GAS EXTRACTION PLANT	05/01/2013 ACT	Smokeless Flare (14) (EQT 0028)	0		Carbon Dioxide Equivalent (CO2e)	Good combustion practices	0		
LA-0271	PLAQUEMINE NGL FRACTIONATION PLANT	05/24/2013 ACT	Process Flare (FLARE-01)	26	MMBTU/H	Carbon Dioxide Equivalent (CO2e)	Clean burning fuels, proper design and operation, and good combustion practices	0		
LA-0271	PLAQUEMINE NGL FRACTIONATION PLANT	05/24/2013 ACT	Emergency Flare (FLARE-02)	2	MMBTU/H	Carbon Dioxide Equivalent (CO2e)	Clean burning fuels, proper design and operation, and good combustion practices	0		
LA-0307	MAGNOLIA LNG FACILITY	03/21/2016 ACT	flares	7.33	kg/hr	Carbon Dioxide Equivalent (CO2e)	good combustion/operating/maintenance practices and fueled by natural gas	0		
*LA-0312	ST. JAMES METHANOL PLANT	06/30/2017 ACT	FL1-13-SUSD - Process Flare Startup/Shutdown (EQ	4789	MMBTU/hr	Carbon Dioxide Equivalent (CO2e)	Compliance with NESHAP Subpart A for flare performance standards. Correct Flare Design and Proper Comb	35890	TPY	
*LA-0312	ST. JAMES METHANOL PLANT	06/30/2017 ACT	FL1-13 - Process Flare (EQT0008)	2.17	MMBTU/hr	Carbon Dioxide Equivalent (CO2e)	Compliance with NESHAP Subpart A for flare performance standards. Correct Flare Design and Proper Comb	1949	TPY	
*LA-0315	G2G PLANT	05/23/2014 ACT	Flare Pilot Burner	1.46	MMBTU/HR	Carbon Dioxide Equivalent (CO2e)	Proper burner design and operation	0		
LA-0316	CAMERON LNG FACILITY	02/17/2017 ACT	Flares (3 units)	0		Carbon Dioxide Equivalent (CO2e)	proper plant operations and maintaining the presence of the flame at the flare tips when vent gas is routed t	0		
LA-0331	CALCASIEU PASS LNG PROJECT	09/21/2018 ACT	Flares (WRMFLR, CLDFLR, LPFLR)	21.74	MM BTU/h	Carbon Dioxide Equivalent (CO2e)	Proper equipment design, proper operation, and good combustion practices.	0		
LA-0331	CALCASIEU PASS LNG PROJECT	09/21/2018 ACT	Marine Loading Flare	0.31	MM BTU/h	Carbon Dioxide Equivalent (CO2e)	Proper equipment design, proper operation, and good combustion practices.	1107	T/YR	ANNUAL TOTAL
SC-0183	NUCOR STEEL - BERKELEY	05/04/2018 ACT	Vacuum Tank Degasser Equipment (vaccum tank d	0		Carbon Dioxide Equivalent (CO2e)		0		
TX-0649	ONEOK HYDROCARBON, MONT BELVIEU NGL FRACTIONATION PLANT	07/22/2013 ACT	Flare (Frac-2 Contribution)	0		Carbon Dioxide Equivalent (CO2e)		2278	T/Y	365-DAY ROLLING
TX-0744	C3 PETROCHEMICALS, PDH CHOCOLATE BAYOU PLANT	06/12/2014 ACT	Ground Flare	0		Carbon Dioxide Equivalent (CO2e)		98	% DRE EFFICIENCY	12-MONTH ROLLING TOTAL
TX-0744	C3 PETROCHEMICALS, PDH CHOCOLATE BAYOU PLANT	06/12/2014 ACT	Ground Flare MSS	0		Carbon Dioxide Equivalent (CO2e)		0		
TX-0747	LONE STAR NGL FRACTIONATORS, MONT BELVIEU GAS PLANT	04/16/2014 ACT	Flare	200	scfh	Carbon Dioxide Equivalent (CO2e)		52	TPY CO2E	365-DAY TOTAL, ROLLED DAILY
TX-0766	GOLDEN PASS LNG EXPORT TERMINAL	09/11/2015 ACT	Flares	0		Carbon Dioxide Equivalent (CO2e)	Equipment specifications & work practices- good combustion practices	0		
TX-0827	PRAXAIR CLEAR LAKE PLANT	10/19/2017 ACT	HyCO Flare	0		Carbon Dioxide Equivalent (CO2e)	Meet the design and operating requirements of 40 CFR 60.18. Emissions are based on a plantwide grouped	0		
TX-0830	PRAXIAR CLEAR LAKE	10/20/2017 ACT	HYCO FLARE	0		Carbon Dioxide Equivalent (CO2e)	Meet the design and operating requirements of 40 CFR 60.18. Emissions are based on a plantwide grouped	1148305	TON/YR	

5. VAPOR COMBUSTION – VCD & TO (RLBC CODES 19.200 & 19.900)

RBLC SUMMARY FOR VAPOR COMBUSTION - NO_x										
RBLCID	FACILITY_NAME	PERMIT_ISSUANCE_DATE	PROCESS_NAME	THROUGHPUT	THROUGHPUT_UNIT	POLLUTANT	CONTROL_METHOD_DESCRIPTION	EMISSION_LIMIT_1	EMISSION_LIMIT_1_UNIT	EMISSION_LIMIT_1_AVG_TIME_CONDITION
LA-0204	PLAQUEMINE PVC PLANT	02/27/2009 ACT	GAS THERMAL OXIDIZERS A & B (M-5 & M-6)	72	MMBTU/H	Nitrogen Oxides (NOx)	GOOD COMBUSTION PRACTICES AND SELECTIVE CATALYTIC REDUCTION (SCR)	0.025	LB/MMBTU	24-H ROLLING AV BASED ON A 1-H AV
LA-0240	FLOPAM INC.	06/14/2010 ACT	Thermal Oxidizers	0		Nitrogen Oxides (NOx)	Good equipment design and proper combustion practices	0.133	LB/MMBTU	
LA-0296	LAKE CHARLES CHEMICAL COMPLEX LDPE UNIT	05/23/2014 ACT	LDPE Thermal Oxidizer (EQT 648)	122	MM BTU/HR	Nitrogen Oxides (NOx)	Compliance with the applicable provisions of 40 CFR 63 Subpart SS.	8.29	LB/HR	HOURLY MAXIMUM
LA-0298	LAKE CHARLES CHEMICAL COMPLEX GUERBET ALCOHOLS UNIT	05/23/2014 ACT	Guerbet Unit Thermal Oxidizer (EQT 771)	0		Nitrogen Oxides (NOx)	Compliance with the applicable provisions of LAC 33:III.2115, including, but not limited to, the c	0.09	LB/HR	HOURLY MAXIMUM
LA-0301	LAKE CHARLES CHEMICAL COMPLEX ETHYLENE 2 UNIT	05/23/2014 ACT	Thermal Oxidizer (EQT 980)	0		Nitrogen Oxides (NOx)	Compliance with 40 CFR 63 Subpart SS	2.29	LB/HR	HOURLY MAXIMUM
LA-0305	LAKE CHARLES METHANOL FACILITY	06/30/2016 ACT	Regenerative Thermal Oxidizers	6	mm btu/hr (each)	Nitrogen Oxides (NOx)		0		
LA-0316	CAMERON LNG FACILITY	02/17/2017 ACT	thermal oxidizers (4 units)	390.42	mm btu/hr	Nitrogen Oxides (NOx)	good equipment design, proper operating practices	0		
LA-0331	CALCASIEU PASS LNG PROJECT	09/21/2018 ACT	Acid Gas Thermal Oxidizer (AGTO)	186	MM BTU/h	Nitrogen Oxides (NOx)	Low NOx Burners and Good Combustion Practices	0.15	LB/MM BTU	3 HOUR AVERAGE
TX-0815	PORT ARTHUR ETHANE SIDE CRACKER	01/17/2017 ACT	Thermal Oxidizer	0		Nitrogen Oxides (NOx)	Good Combustion Practices and Design	3	T/YR	
*TX-0864	EQUISTAR CHEMICALS CHANNELVIEW COMPLEX	09/09/2019 ACT	Thermal Oxidizer	0		Nitrogen Oxides (NOx)	SCR	0.02	LB/MMBTU	
LA-0323	MONSANTO LULING PLANT	01/09/2017 ACT	Thermal Oxidizer with Caustic Scrubber	33.5	mmbtu/h	Nitrogen Oxides (NOx)	Good combustion practices, Compliance with applicable NESHAP, and Caustic Scrubber.	0		
MD-0044	COVE POINT LNG TERMINAL	06/09/2014 ACT	THERMAL OXIDIZER	56	MMBTU/H	Nitrogen Oxides (NOx)	USE OF SCR SYSTEM, DESIGNED TO MEET THE EMISSION LIMIT AT ALL TIMES	2.5	PPMVD @ 15% O2	3-HOUR BLOCK AVERAGE
MI-0401	MIDLAND POWER STATION	12/21/2011 ACT	Gasifier/thermal oxidizer (1 of 3)	225	MMBtu/hr heat input	Nitrogen Oxides (NOx)	FGR + low NOx burners + SCR	0.06	LB/MMBTU	EACH; CONTINUOUS
OH-0348	LORAINE COUNTY LFG POWER STATION	09/14/2011 ACT	Thermal Oxidizer	6	MMBTU/H	Nitrogen Oxides (NOx)		0.48	LB/H	
TN-0161	VOLKSWAGEN GROUP OF AMERICA, CHATTANOOGA OPERATIONS	12/03/2012 ACT	E-COAT DRYING OVEN THERMAL OXIDIZERS (2)	6.82	MMBTU/H	Nitrogen Oxides (NOx)	LOW NOX BURNERS	2.52	LB/H	
TN-0161	VOLKSWAGEN GROUP OF AMERICA, CHATTANOOGA OPERATIONS	12/03/2012 ACT	CLEARCOAT BOOTH THERMAL OXIDIZERS (2)	3.55	MMBTU/H	Nitrogen Oxides (NOx)	LOW-NOX BURNERS	0.71	LB/H	
TN-0161	VOLKSWAGEN GROUP OF AMERICA, CHATTANOOGA OPERATIONS	12/03/2012 ACT	CLEARCOAT DRYING OVENS THERMAL OXIDIZER (2)	6.82	MMBTU/H	Nitrogen Oxides (NOx)	LOW-NOX BURNERS	3.1	LB/H	
TX-0697	ETHYLENE PRODUCTION PLANT	03/27/2014 ACT	Thermal Oxidizer	11	MMBTU/H	Nitrogen Oxides (NOx)	TO will be designed to achieve 99.9% VOC DRE and will have continuous temperature and oxyg	0.06	LB/MMBTU	
TX-0706	NATURAL GAS FRACTIONATION	01/23/2014 ACT	Thermal Oxidizers	0		Nitrogen Oxides (NOx)	Low NOx burners, Monitoring exit temperature, stack testing, and a NOx emission factor of 0.0	0.06	LB/MMBTU	
LA-0291	LAKE CHARLES CHEMICAL COMPLEX GTL UNIT	05/23/2014 ACT	Vapor Combustor (EQT 834)	0		Nitrogen Oxides (NOx)	Compliance with 40 CFR 63 Subpart FFFF	2.09	LB/HR	HOURLY MAXIMUM
LA-0320	ST. CHARLES REFINERY	03/05/2014 ACT	Marine Vapor Recovery Combustion Unit 2	0		Nitrogen Oxides (NOx)	Proper design and operation, good combustion practices and gaseous fuels fuels	0		
TX-0682	GALENA PARK TERMINAL	06/12/2013 ACT	Vapor Combustion Units	0		Nitrogen Oxides (NOx)	VCU's will not have add-on control. VCUs are designed to minimize VOC emissions from tanks a	0		
TX-0844	OXY INGLESIDE ENERGY CENTER	07/25/2018 ACT	VAPOR COMBUSTOR UNITS	0		Nitrogen Oxides (NOx)	Use of sweet natural gas as fuel	0.06	LB/MMBTU	

RBLC SUMMARY FOR VAPOR COMBUSTION - CO										
RBLCID	FACILITY_NAME	PERMIT_ISSUANCE_DATE	PROCESS_NAME	THROUGHPUT	THROUGHPUT_UNIT	POLLUTANT	CONTROL_METHOD_DESCRIPTION	EMISSION_LIMIT_1	EMISSION_LIMIT_1_UNIT	EMISSION_LIMIT_1_AVG_TIME_CONDITION
LA-0204	PLAQUEMINE PVC PLANT	02/27/2009 ACT	GAS THERMAL OXIDIZERS A & B (M-5 & M-6)	72	MMBTU/H	Carbon Monoxide	GOOD COMBUSTION PRACTICES AND USE OF GASEOUS FUEL	0.11	LB/MMBTU	THREE ONE-HOUR TEST AVERAGE
LA-0240	FLOPAM INC.	06/14/2010 ACT	Thermal Oxidizers	0		Carbon Monoxide	Good equipment design and proper combustion practices	0.08	LB/MMBTU	
LA-0296	LAKE CHARLES CHEMICAL COMPLEX LDPE UNIT	05/23/2014 ACT	LDPE Thermal Oxidizer (EQT 648)	122	MM BTU/HR	Carbon Monoxide	Compliance with the applicable provisions of 40 CFR 63 Subpart SS.	45.1	LB/HR	HOURLY MAXIMUM
LA-0298	LAKE CHARLES CHEMICAL COMPLEX GUERBET ALCOHOLS UNIT	05/23/2014 ACT	Guerbet Unit Thermal Oxidizer (EQT 771)	0		Carbon Monoxide	Compliance with the applicable provisions of LAC 33:III.2115, including, but not limi	0.51	LB/HR	HOURLY MAXIMUM
LA-0301	LAKE CHARLES CHEMICAL COMPLEX ETHYLENE 2 UNIT	05/23/2014 ACT	Thermal Oxidizer (EQT 980)	0		Carbon Monoxide	Compliance with 40 CFR 63 Subpart SS	12.45	LB/HR	HOURLY MAXIMUM
LA-0305	LAKE CHARLES METHANOL FACILITY	06/30/2016 ACT	Regenerative Thermal Oxidizers	6	mm btu/hr (each)	Carbon Monoxide	good engineering design and good combustion practices	0		
LA-0311	DONALDSONVILLE NITROGEN COMPLEX	07/15/2013 ACT	Nos. 5 and 6 Ammonia Plants Thermal Oxidizer (7-13, EQT 160)	36	MM Btu/hr	Carbon Monoxide	Good combustion practices; proper engineering design	3.56	LB/HR	HOURLY MAXIMUM
LA-0316	CAMERON LNG FACILITY	02/17/2017 ACT	thermal oxidizers (4 units)	390.42	mm btu/hr	Carbon Monoxide	good equipment design, proper operating practices, and fueled by natural gas	0		
LA-0331	CALCASIEU PASS LNG PROJECT	09/21/2018 ACT	Acid Gas Thermal Oxidizer (AGTO)	186	MM BTU/h	Carbon Monoxide	Proper Equipment Design and Operation, Good Combustion Practices	0.09	LB/MM BTU	3 HOUR AVERAGE
TX-0815	PORT ARTHUR ETHANE SIDE CRACKER	01/17/2017 ACT	Thermal Oxidizer	0		Carbon Monoxide	Good Combustion Practices and Design	1.9	T/YR	
*TX-0864	EQUISTAR CHEMICALS CHANNELVIEW COMPLEX	09/09/2019 ACT	Thermal Oxidizer	0		Carbon Monoxide	good combustion practices, design, natural gas fuel	50	PPM	3% O2
LA-0250	POLLOCK PLYWOOD MILL	05/25/2011 ACT	REGENERATIVE THERMAL OXIDIZER (21-08, EQT 018)	5.81	MMBTU/H	Carbon Monoxide	GOOD COMBUSTION PRACTICES	9.81	LB/H	HOURLY MAXIMUM
LA-0323	MONSANTO LULING PLANT	01/09/2017 ACT	Thermal Oxidizer with Caustic Scrubber	33.5	mm btu/h	Carbon Monoxide	Good combustion practices, Compliance with applicable NESHAP, and Caustic Scrul	0		
MD-0044	COVE POINT LNG TERMINAL	06/09/2014 ACT	THERMAL OXIDIZER	56	MMBTU/H	Carbon Monoxide	GOOD COMBUSTION PRACTICES WITH OXIDATION CATALYST, DESIGNED TO MEET	1.5	PPMVD @ 15% O2	3-HOUR BLOCK AVERAGE
OH-0348	LORAINE COUNTY LFG POWER STATION	09/14/2011 ACT	Thermal Oxidizer	6	MMBTU/H	Carbon Monoxide		1.2	LB/H	
LA-0291	LAKE CHARLES CHEMICAL COMPLEX GTL UNIT	05/23/2014 ACT	Vapor Combustor (EQT 834)	0		Carbon Monoxide	Compliance with 40 CFR 63 Subpart FFFF	4.16	LB/HR	HOURLY MAXIMUM
LA-0320	ST. CHARLES REFINERY	03/05/2014 ACT	Marine Vapor Recovery Combustion Unit 2	0		Carbon Monoxide	Proper design and operation, good combustion practices and gaseous fuels fuels	0		
TX-0852	CORPUS CHRISTI WATERFRONT TERMINAL	01/02/2019 ACT	Marine Vapor Combustors	0		Carbon Monoxide	good operating methods and combustion	0.2	LB/MMBTU	

RBLC SUMMARY FOR VAPOR COMBUSTION - VOC										
RBLCID	FACILITY_NAME	PERMIT_ISSUANCE_DATE	PROCESS_NAME	THROUGHPUT	THROUGHPUT_UNIT	POLLUTANT	CONTROL_METHOD_DESCRIPTION	EMISSION_LIMIT_1	EMISSION_LIMIT_1_UNIT	EMISSION_LIMIT_1_AVG_TIME_CONDITION
LA-0240	FLOPAM INC.	06/14/2010 ACT	Thermal Oxidizers	0		Volatile Organic Compounds (VOC)	Good equipment design and proper combustion practices	99	%	CONTROL EFFICIENCY
LA-0296	LAKE CHARLES CHEMICAL COMPLEX LDPE UNIT	05/23/2014 ACT	LDPE Thermal Oxidizer (EQT 648)	122	MM BTU/HR	Volatile Organic Compounds (VOC)	Compliance with the applicable provisions of 40 CFR 63 Subpart SS.	11.76	LB/HR	HOURLY MAXIMUM
LA-0298	LAKE CHARLES CHEMICAL COMPLEX GUERBET ALCOHOLS UNIT	05/23/2014 ACT	Guerbet Unit Thermal Oxidizer (EQT 771)	0		Volatile Organic Compounds (VOC)	Compliance with the applicable provisions of LAC 33:III.2115, including, but not limite	0.31	LB/HR	HOURLY MAXIMUM
LA-0301	LAKE CHARLES CHEMICAL COMPLEX ETHYLENE 2 UNIT	05/23/2014 ACT	Thermal Oxidizer (EQT 980)	0		Volatile Organic Compounds (VOC)	Compliance with 40 CFR 63 Subpart SS	17.77	LB/HR	HOURLY MAXIMUM
LA-0316	CAMERON LNG FACILITY	02/17/2017 ACT	thermal oxidizers (4 units)	390.42	mm btu/hr	Volatile Organic Compounds (VOC)	good equipment design, proper operating practices, and fueled by natural gas	0		
LA-0331	CALCASIEU PASS LNG PROJECT	09/21/2018 ACT	Acid Gas Thermal Oxidizer (AGTO)	186	MM BTU/h	Volatile Organic Compounds (VOC)	Proper Equipment Design and Operation, Good Combustion Practices	0.01	LB/MM BTU	3 HOUR AVERAGE
*TX-0864	EQUISTAR CHEMICALS CHANNELVIEW COMPLEX	09/09/2019 ACT	Thermal Oxidizer	0		Volatile Organic Compounds (VOC)	good combustion practices, design, natural gas fuel	0		
MD-0044	COVE POINT LNG TERMINAL	06/09/2014 ACT	THERMAL OXIDIZER	56	MMBTU/H	Volatile Organic Compounds (VOC)	OXIDATION CATALYST, DESIGNED TO MEET EMISSION LIMIT AT ALL TIMES	0.03	LB/H	3-HOUR BLOCK AVERAGE
OH-0348	LORAINE COUNTY LFG POWER STATION	09/14/2011 ACT	Thermal Oxidizer	6	MMBTU/H	Volatile Organic Compounds (VOC)		0.08	LB/H	
TX-0697	ETHYLENE PRODUCTION PLANT	03/27/2014 ACT	Thermal Oxidizer	11	MMBTU/H	Volatile Organic Compounds (VOC)	good combustion	99	%	DRE
TX-0706	NATURAL GAS FRACTIONATION	01/23/2014 ACT	Thermal Oxidizers	0		Volatile Organic Compounds (VOC)	Monitoring exit temperature, stack testing, CEMs if VOC>10 tpy, 99.9% DRE or 10 ppm	10	PPMV	AT 3% OXYGEN
LA-0291	LAKE CHARLES CHEMICAL COMPLEX GTL UNIT	05/23/2014 ACT	Vapor Combustor (EQT 834)	0		Volatile Organic Compounds (VOC)	Compliance with 40 CFR 63 Subpart FFFF	15.48	LB/HR	HOURLY MAXIMUM
LA-0320	ST. CHARLES REFINERY	03/05/2014 ACT	Marine Vapor Recovery Combustion Unit 2	0		Volatile Organic Compounds (VOC)	Comply with 40 CFR 61 Subpart BB, 40 CFR 63 Subpart CC, and LAC 33:III.2108	0		
TX-0844	OXY INGLESIDE ENERGY CENTER	07/25/2018 ACT	VAPOR COMBUSTOR UNITS	0		Volatile Organic Compounds (VOC)	best combustion practices	0		

RBLC SUMMARY FOR VAPOR COMBUSTION - PM										
RBLCID	FACILITY_NAME	PERMIT_ISSUANCE_DATE	PROCESS_NAME	THROUGHPUT	THROUGHPUT_UNIT	POLLUTANT	CONTROL_METHOD_DESCRIPTION	EMISSION_LIMIT_1	EMISSION_LIMIT_1_UNIT	EMISSION_LIMIT_1_AVG_TIME_CONDITION
LA-0204	PLAQUEMINE PVC PLANT	02/27/2009 ACT	GAS THERMAL OXIDIZERS A & B (M-5 & M-6)	72	MMBTU/H	Particulate matter, filterable < 10 Âµ (FPM10)	GOOD COMBUSTION PRACTICES AND USE OF GASEOUS FUEL	0.0075	LB/MMBTU	THREE ONE-HOUR TEST AVERAGE
LA-0240	FLOPAM INC.	06/14/2010 ACT	Thermal Oxidizers	0		Particulate matter, total < 10 Âµ (TPM10)	Good equipment design and proper combustion practices	0.008	LB/MMBTU	
LA-0296	LAKE CHARLES CHEMICAL COMPLEX LDPE UNIT	05/23/2014 ACT	LDPE Thermal Oxidizer (EQT 648)	122	MM BTU/HR	Particulate matter, total < 10 Âµ (TPM10)	Compliance with the applicable provisions of 40 CFR 63 Subpart SS.	1.36	LB/HR	HOURLY MAXIMUM
LA-0296	LAKE CHARLES CHEMICAL COMPLEX LDPE UNIT	05/23/2014 ACT	LDPE Thermal Oxidizer (EQT 648)	122	MM BTU/HR	Particulate matter, total < 2.5 Âµ (TPM2.5)	Compliance with the applicable provisions of 40 CFR 63 Subpart SS.	1.36	LB/HR	HOURLY MAXIMUM
LA-0298	LAKE CHARLES CHEMICAL COMPLEX GUERBET ALCOHOLS UNIT	05/23/2014 ACT	Guerbet Unit Thermal Oxidizer (EQT 771)	0		Particulate matter, total < 10 Âµ (TPM10)	Compliance with the applicable provisions of LAC 33:III.2115, including, but not limite	0.001	LB/HR	HOURLY MAXIMUM
LA-0298	LAKE CHARLES CHEMICAL COMPLEX GUERBET ALCOHOLS UNIT	05/23/2014 ACT	Guerbet Unit Thermal Oxidizer (EQT 771)	0		Particulate matter, total < 2.5 Âµ (TPM2.5)	Compliance with the applicable provisions of LAC 33:III.2115, including, but not limite	0.001	LB/HR	HOURLY MAXIMUM
LA-0301	LAKE CHARLES CHEMICAL COMPLEX ETHYLENE 2 UNIT	05/23/2014 ACT	Thermal Oxidizer (EQT 980)	0		Particulate matter, total < 10 Âµ (TPM10)	Compliance with 40 CFR 63 Subpart SS	0.22	LB/HR	HOURLY MAXIMUM
LA-0301	LAKE CHARLES CHEMICAL COMPLEX ETHYLENE 2 UNIT	05/23/2014 ACT	Thermal Oxidizer (EQT 980)	0		Particulate matter, total < 2.5 Âµ (TPM2.5)	Compliance with 40 CFR 63 Subpart SS	0.22	LB/HR	HOURLY MAXIMUM
LA-0305	LAKE CHARLES METHANOL FACILITY	06/30/2016 ACT	Regenerative Thermal Oxidizers	6	mm btu/hr (each)	Particulate matter, total < 10 Âµ (TPM10)		0		
LA-0305	LAKE CHARLES METHANOL FACILITY	06/30/2016 ACT	Regenerative Thermal Oxidizers	6	mm btu/hr (each)	Particulate matter, total < 2.5 Âµ (TPM2.5)		0		
LA-0316	CAMERON LNG FACILITY	02/17/2017 ACT	thermal oxidizers (4 units)	390.42	mm btu/hr	Particulate matter, total < 10 Âµ (TPM10)	good equipment design, proper operating practices, and fueled by natural gas	0		
LA-0316	CAMERON LNG FACILITY	02/17/2017 ACT	thermal oxidizers (4 units)	390.42	mm btu/hr	Particulate matter, total < 2.5 Âµ (TPM2.5)	good equipment design, proper operating practices, and fueled by natural gas	0		
LA-0331	CALCASIEU PASS LNG PROJECT	09/21/2018 ACT	Acid Gas Thermal Oxidizer (AGTO)	186	MM BTU/h	Particulate matter, total < 10 Âµ (TPM10)	Exclusive Combustion of Fuel Gas and Good Combustion Practices	0.0082	LB/MM BTU	3 HOUR AVERAGE
LA-0331	CALCASIEU PASS LNG PROJECT	09/21/2018 ACT	Acid Gas Thermal Oxidizer (AGTO)	186	MM BTU/h	Particulate matter, total < 2.5 Âµ (TPM2.5)	Exclusive Combustion of Fuel Gas and Good Combustion Practices	0.0082	LB/MM BTU	3 HOUR AVERAGE
TX-0815	PORT ARTHUR ETHANE SIDE CRACKER	01/17/2017 ACT	Thermal Oxidizer	0		Particulate matter, filterable < 10 Âµ (FPM10)	Good Combustion Practices and Design	0.17	T/YR	
*TX-0864	EQUISTAR CHEMICALS CHANNELVIEW COMPLEX	09/09/2019 ACT	Thermal Oxidizer	0		Particulate matter, filterable (FPM)	good combustion practices, design, natural gas fuel	0.007	LB/MMBTU	
*TX-0864	EQUISTAR CHEMICALS CHANNELVIEW COMPLEX	09/09/2019 ACT	Thermal Oxidizer	0		Particulate matter, filterable < 10 Âµ (FPM10)	good combustion practices, design, natural gas fuel	0.007	LB/MMBTU	
*TX-0864	EQUISTAR CHEMICALS CHANNELVIEW COMPLEX	09/09/2019 ACT	Thermal Oxidizer	0		Particulate matter, filterable < 2.5 Âµ (FPM2.5)	good combustion practices, design, natural gas fuel	0.007	LB/MMBTU	
LA-0323	MONSANTO LULING PLANT	01/09/2017 ACT	Thermal Oxidizer with Caustic Scrubber	33.5	mmbtu/h	Particulate matter, total < 10 Âµ (TPM10)	Good combustion practices, Compliance with applicable NESHAP, and Caustic Scrubb	0		
LA-0323	MONSANTO LULING PLANT	01/09/2017 ACT	Thermal Oxidizer with Caustic Scrubber	33.5	mmbtu/h	Particulate matter, total < 2.5 Âµ (TPM2.5)	Good combustion practices, Compliance with applicable NESHAP, and Caustic Scrubb	0		
MD-0044	COVE POINT LNG TERMINAL	06/09/2014 ACT	THERMAL OXIDIZER	56	MMBTU/H	Particulate matter, filterable (FPM)	GOOD COMBUSTION PRACTICES AND FIRING PROCESS FUEL GAS; DESIGNED TO MEE	0.013	LB/MMBTU	3-HOUR BLOCK AVERAGE
MD-0044	COVE POINT LNG TERMINAL	06/09/2014 ACT	THERMAL OXIDIZER	56	MMBTU/H	Particulate matter, total < 10 Âµ (TPM10)	GOOD COMBUSTION PRACTICES AND FIRING PROCESS FUEL GAS; DESIGNED TO MEE	0.016	LB/MMBTU	3 STACK TEST RUN AVERAGE
MD-0044	COVE POINT LNG TERMINAL	06/09/2014 ACT	THERMAL OXIDIZER	56	MMBTU/H	Particulate matter, total < 2.5 Âµ (TPM2.5)	GOOD COMBUSTION PRACTICES AND FIRING PROCESS FUEL GAS; DESIGNED TO MEE	0.016	LB/MMBTU	3 STACK TEST AVERAGE
MI-0401	MIDLAND POWER STATION	12/21/2011 ACT	Gasifier/thermal oxidizer (1 of 3)	225	MMBtu/hr heat input	Particulate matter, filterable (FPM)	Cyclone + wet electrostatic precipitator	0.01	LB/MMBTU	EACH; AVG. PER TEST METHOD
MI-0401	MIDLAND POWER STATION	12/21/2011 ACT	Gasifier/thermal oxidizer (1 of 3)	225	MMBtu/hr heat input	Particulate matter, total < 10 Âµ (TPM10)	Cyclone + wet electrostatic precipitator.	0.014	LB/MMBTU	TEST METHOD
MI-0401	MIDLAND POWER STATION	12/21/2011 ACT	Gasifier/thermal oxidizer (1 of 3)	225	MMBtu/hr heat input	Particulate matter, total < 2.5 Âµ (TPM2.5)	Cyclone + wet electrostatic precipitator	0.014	LB/MMBTU	TEST METHOD
OH-0348	LORAINE COUNTY LFG POWER STATION	09/14/2011 ACT	Thermal Oxidizer	6	MMBTU/H	Particulate matter, filterable < 10 Âµ (FPM10)		0.1	LB/H	
LA-0291	LAKE CHARLES CHEMICAL COMPLEX GTL UNIT	05/23/2014 ACT	Vapor Combustor (EQT 834)	0		Particulate matter, total < 10 Âµ (TPM10)	Compliance with 40 CFR 63 Subpart FFFF	0.04	LB/HR	HOURLY MAXIMUM
LA-0291	LAKE CHARLES CHEMICAL COMPLEX GTL UNIT	05/23/2014 ACT	Vapor Combustor (EQT 834)	0		Particulate matter, total < 2.5 Âµ (TPM2.5)	Compliance with 40 CFR 63 Subpart FFFF	0.04	LB/HR	HOURLY MAXIMUM
LA-0320	ST. CHARLES REFINERY	03/05/2014 ACT	Marine Vapor Recovery Combustion Unit 2	0		Particulate matter, total < 10 Âµ (TPM10)	Proper design and operation, good combustion practices and gaseous fuels fuels	0		
LA-0320	ST. CHARLES REFINERY	03/05/2014 ACT	Marine Vapor Recovery Combustion Unit 2	0		Particulate matter, total < 2.5 Âµ (TPM2.5)	Proper design and operation, good combustion practices and gaseous fuels fuels	0		

RBLC SUMMARY FOR VAPOR COMBUSTION - CO_2e										
RBLCID	FACILITY_NAME	PERMIT_ISSUANCE_DATE	PROCESS_NAME	THROUGHPUT	THROUGHPUT_UNIT	POLLUTANT	CONTROL_METHOD_DESCRIPTION	EMISSION_LIMIT_1	EMISSION_LIMIT_1_UNIT	EMISSION_LIMIT_1_AVG_TIME_CONDITION
CO-0067	LANCASTER PLANT	06/04/2013 ACT	Four Thermal Oxidizers	44	MMBTU/H	Carbon Dioxide Equivalent (CO2e)	99% destruction efficiency & 1400 degrees F.	0		
LA-0266	EUNICE GAS EXTRACTION PLANT	05/01/2013 ACT	Regenerative Thermal Oxidizer (RTO) (EQT 0062)	31.2	MMBTU/H	Carbon Dioxide Equivalent (CO2e)	Good combustion practices	0		
LA-0296	LAKE CHARLES CHEMICAL COMPLEX LDPE UNIT	05/23/2014 ACT	LDPE Thermal Oxidizer (EQT 648)	122	MM BTU/HR	Carbon Dioxide Equivalent (CO2e)	Compliance with the applicable provisions of 40 CFR 63 Subpart SS.	42165	TPY	ANNUAL MAXIMUM
LA-0298	LAKE CHARLES CHEMICAL COMPLEX GUERBET ALCOHOLS UNIT	05/23/2014 ACT	Guerbet Unit Thermal Oxidizer (EQT 771)	0		Carbon Dioxide Equivalent (CO2e)	Compliance with the applicable provisions of LAC 33:III.2115, including, but not limited to, the con	236	TPY	ANNUAL MAXIMUM
LA-0301	LAKE CHARLES CHEMICAL COMPLEX ETHYLENE 2 UNIT	05/23/2014 ACT	Thermal Oxidizer (EQT 980)	0		Carbon Dioxide Equivalent (CO2e)	Compliance with 40 CFR 63 Subpart SS	3739	TPY	ANNUAL MAXIMUM
LA-0305	LAKE CHARLES METHANOL FACILITY	06/30/2016 ACT	Regenerative Thermal Oxidizers	6	mm btu/hr (each)	Carbon Dioxide Equivalent (CO2e)	good equipment design and good combustion practices	0		
LA-0311	DONALDSONVILLE NITROGEN COMPLEX	07/15/2013 ACT	Nos. 5 and 6 Ammonia Plants Thermal Oxidizer (7-13, EQT 160)	36	MM Btu/hr	Carbon Dioxide Equivalent (CO2e)	Good thermal oxidizer design with appropriate instrumentation; use of natural gas as fuel.	117	LB/MM BTU	ANNUAL AVERAGE
LA-0316	CAMERON LNG FACILITY	02/17/2017 ACT	thermal oxidizers (4 units)	390.42	mm btu/hr	Carbon Dioxide Equivalent (CO2e)	good equipment design, proper operating practices, and fueled by natural gas	0		
LA-0331	CALCASIEU PASS LNG PROJECT	09/21/2018 ACT	Acid Gas Thermal Oxidizer (AGTO)	186	MM BTU/h	Carbon Dioxide Equivalent (CO2e)	Exclusive Combustion of Gaseous Fuel, Good Combustion Practices, Good Operation & Maintenan	768337	T/YR	ANNUAL TOTAL
TX-0746	NUEVO MIDSTREAM, RAMSEY GAS PLANT	11/18/2014 ACT	Regenerative Thermal Oxidizer	192	MMBtu/yr	Carbon Dioxide Equivalent (CO2e)		1550	DEGREE F	365 DAY ROLLING AVERAGE
TX-0747	LONE STAR NGL FRACTIONATORS, MONT BELVIEU GAS PLANT	04/16/2014 ACT	Thermal Oxidizer	10	MMBtu/hr w/Nat Gas	Carbon Dioxide Equivalent (CO2e)		42703	TPY OF CO2E	365-DAY TOTAL ROLLED DAILY
*TX-0864	EQUISTAR CHEMICALS CHANNELVIEW COMPLEX	09/09/2019 ACT	Thermal Oxidizer	0		Carbon Dioxide Equivalent (CO2e)	good combustion practices, design, natural gas fuel	0		
LA-0323	MONSANTO LULING PLANT	01/09/2017 ACT	Thermal Oxidizer with Caustic Scrubber	33.5	mmbtu/h	Carbon Dioxide Equivalent (CO2e)	Good combustion practices	0		
TX-0766	GOLDEN PASS LNG EXPORT TERMINAL	09/11/2015 ACT	Thermal Oxidizers	0		Carbon Dioxide Equivalent (CO2e)	Equipment specifications & work â€" good combustion practices	374114	TPY	
LA-0291	LAKE CHARLES CHEMICAL COMPLEX GTL UNIT	05/23/2014 ACT	Vapor Combustor (EQT 834)	0		Carbon Dioxide Equivalent (CO2e)	Compliance with 40 CFR 63 Subpart FFFF	9753	TPY	ANNUAL MAXIMUM
TX-0644	EQUISTAR CHEMICALS, LP - CHANNELVIEW NORTH PLANT	02/14/2013 ACT	Methanol Flare and Methanol Emergency Flare (Combustion Unit)	0		Carbon Dioxide Equivalent (CO2e)		3936	T/YR	12-MONTH ROLLING AVERAGE

6. STORAGE TANKS – FIXED ROOF & IFR (RLBC CODES 42.005, 42.006 & 42.009)

RBLC SUMMARY FOR TANKS - VOC										
RBLCID	FACILITY_NAME	PERMIT_ISSUANCE_DATE	PROCESS_NAME	THROUGHPUT	THROUGHPUT_UNIT	POLLUTANT	CONTROL_METHOD_DESCRIPTION	EMISSION_LIMIT_1	EMISSION_LIMIT_1_UNIT	EMISSION_LIMIT_1_AVG_TIME_CONDITION
LA-0228	BATON ROUGE JUNCTION FACILITY	11/02/2009 ACT	FUG003 TANK CLEANING (TC01)			Volatile Organic Compounds (VOC)	LIMIT TANK CLEANING TO 2 TIMES PER ANY 12 CONSECUTIVE MONTH PERIOD. MIN	16.07	T/YR	12 CONSECUTIVE MONTH TOTAL
LA-0237	ST. ROSE TERMINAL	05/20/2010 ACT	HEAVY FUEL OIL STORAGE TANKS (18)	0		Volatile Organic Compounds (VOC)	FIXED ROOF	67.53	T/YR	(CAP FOR 18 TANKS)
LA-0265	ST. CHARLES REFINERY	10/02/2012 ACT	FR Storage Tanks EQT0087 and EQT0088	0		Volatile Organic Compounds (VOC)	Comply with 40 CFR 63 Subpart CC (Group 2)	0		
LA-0265	ST. CHARLES REFINERY	10/02/2012 ACT	EFR Storage Tank EQT0169	0		Volatile Organic Compounds (VOC)	Comply with 40 CFR 60 Subpart Kb using an EFR	0		
LA-0276	BATON ROUGE JUNCTION FACILITY	12/15/2016 ACT	Tank 190 (EQT0036 - IFR)	0		Volatile Organic Compounds (VOC)	Internal floating roof and submerged fill pipe	0		
LA-0276	BATON ROUGE JUNCTION FACILITY	12/15/2016 ACT	Vertical Fixed Roof Tanks 174, 175, 176	0		Volatile Organic Compounds (VOC)	Submerged fill pipes and pressure/vacuum vents	0		
LA-0314	INDORAMA LAKE CHARLES FACILITY	08/03/2016 ACT	oil tank FA-712 - 012	66150	gal	Volatile Organic Compounds (VOC)	IFR with liquid mounted seal, double seal, or mechanical seal	0		
LA-0314	INDORAMA LAKE CHARLES FACILITY	08/03/2016 ACT	storm water surge tank TK-9 - 013	291410	gallons	Volatile Organic Compounds (VOC)	fixed roof	0		
LA-0314	INDORAMA LAKE CHARLES FACILITY	08/03/2016 ACT	process water storage tanks TK-301A/B - 017	350000	gallons	Volatile Organic Compounds (VOC)	EFR with primary and secondary seal, submerged fill pipe, and complying with 40 CF	0		
OK-0148	BUFFALO CREEK PROCESSING PLANT	09/12/2012 ACT	Condensate Tanks (Petroleum Storage-Fixed Roof Tanks)	1.46	MMBPY	Volatile Organic Compounds (VOC)	Flare.	0		
OK-0153	ROSE VALLEY PLANT	03/01/2013 ACT	CONDENSATE TANKS	9198000	GAL/YR	Volatile Organic Compounds (VOC)	FLARE	0.82	TPY	
OR-0050	TROUTDALE ENERGY CENTER, LLC	03/05/2014 ACT	Storage tank	0		Volatile Organic Compounds (VOC)	Submerged fill line;	0		
*SC-0193	MERCEDES BENZ VANS, LLC	04/15/2016 ACT	Storage Tank	5000	gal	Volatile Organic Compounds (VOC)	Stage 1 Vapor Control	0		
TX-0656	GAS TO GASOLINE PLANT	05/16/2014 ACT	Fixed Roof Tanks (3)	800000	GAL/YR	Volatile Organic Compounds (VOC)	WATER SCRUBBER	1.65	T/YR	
TX-0656	GAS TO GASOLINE PLANT	05/16/2014 ACT	METHANOL AND WATER STORAGE TANK	3087	GAL	Volatile Organic Compounds (VOC)	HORIZONTAL FIXED ROOF WITH SUBMERGED FILL, WHITE EXTERIOR	0.12	T/YR	
TX-0731	CORPUS CHRISTI TERMINAL CONDENSATE SPLITTER	04/10/2015 ACT	Petroleum Liquids Storage in Fixed Roof Tanks	3.4	MMBbl/yr/tank	Volatile Organic Compounds (VOC)	Temperature reduced to maintain volatile organic compound (VOC) vapor pressure	15.78	TONS/YR/TANK	
TX-0731	CORPUS CHRISTI TERMINAL CONDENSATE SPLITTER	04/10/2015 ACT	Petroleum Liquids Storage in Floating Roof Tanks	8	MMBbl/yr/tank	Volatile Organic Compounds (VOC)	VOC vapor pressure of 0.5 psia or greater. Proper fitting and seal integrity for the	5.09	TONS/YR/TANK	
TX-0756	CCI CORPUS CHRISTI CONDENSATE SPLITTER FACILITY	06/19/2015 ACT	Storage Tanks, TK-101, TK-102, TK-103, TK-104	383000000	gal/yr/tank	Volatile Organic Compounds (VOC)	Internal floating roof with mechanical shoe primary seal and a rim mounted second	6.44	LB/HR	
TX-0756	CCI CORPUS CHRISTI CONDENSATE SPLITTER FACILITY	06/19/2015 ACT	Storage Tanks, TK-105, TK-106	300000000	gal/yr/tank	Volatile Organic Compounds (VOC)	Internal floating roof with mechanical shoe primary seal and a rim mounted second	2.35	LB/R	
TX-0756	CCI CORPUS CHRISTI CONDENSATE SPLITTER FACILITY	06/19/2015 ACT	Storage Tanks 116, TK-117, TK-118, and TK-119	744282000	gal/yr/tank	Volatile Organic Compounds (VOC)	Internal floating roof with mechanical shoe primary seal and a rim mounted second	6.38	LB/HR	
TX-0756	CCI CORPUS CHRISTI CONDENSATE SPLITTER FACILITY	06/19/2015 ACT	Storage Tanks, TK-107, TK-108, TK-109, 42.005	60300	gal/hr	Volatile Organic Compounds (VOC)	Material w/vapor press < 0.5 psia. Tanks are required to be painted white and be eq	4.2	LB/HR	
TX-0756	CCI CORPUS CHRISTI CONDENSATE SPLITTER FACILITY	06/19/2015 ACT	Storage Tanks, TK-110, TK-111, TK-112	57960	gal/hr	Volatile Organic Compounds (VOC)	Tanks are required to be painted white and be equipped with submerged fill pipes	3.07	LB/HR	
TX-0756	CCI CORPUS CHRISTI CONDENSATE SPLITTER FACILITY	06/19/2015 ACT	Storage Tanks, TK-113, TK-114, and TK-115	47000000	gal/yr/tank	Volatile Organic Compounds (VOC)	Tanks are required to be painted white and be equipped with submerged fill pipes	0.85	LB/HR	
TX-0756	CCI CORPUS CHRISTI CONDENSATE SPLITTER FACILITY	06/19/2015 ACT	Wastewater Tank, TK-3	8000000	gallons/yr	Volatile Organic Compounds (VOC)	Tank is required to be painted white and be equipped with submerged fill pipes	0.01	LB/HR	
TX-0756	CCI CORPUS CHRISTI CONDENSATE SPLITTER FACILITY	06/19/2015 ACT	Storage Tanks, TK-120 and TK-121	1437817500	gal/yr/tank	Volatile Organic Compounds (VOC)	External floating roof with mechanical shoe primary seal and a rim mounted second	5.43	LB/HR	
TX-0756	CCI CORPUS CHRISTI CONDENSATE SPLITTER FACILITY	06/19/2015 ACT	Floating Roof Storage Tanks - Controlled Maintenance, Startup	5000	scf/hr	Volatile Organic Compounds (VOC)	Vapor space under the landed floating roof is degassed to a flare meeting the requir	10000	PPMV	
TX-0772	PORT OF BEAUMONT PETROLEUM TRANSLOAD TERMINA	11/06/2015 ACT	Petroleum Liquids Storage in Floating Roof Tanks	276565714	BBL/YR	Volatile Organic Compounds (VOC)	Floating roof with mechanical shoe primary seals and secondary seals if the tank	289.13	T/YR	
TX-0772	PORT OF BEAUMONT PETROLEUM TRANSLOAD TERMINA	11/06/2015 ACT	Petroleum Liquids Storage in Fixed Roof Tanks	47.62	BBL/YR	Volatile Organic Compounds (VOC)	Tank uses submerged fill and is aluminum in color.	0.01	T/YR	
TX-0799	BEAUMONT TERMINAL	06/08/2016 ACT	Storage Tanks -IFR	0		Volatile Organic Compounds (VOC)	IFR tanks (EPNs 169, 216, 218, 221, 230, 233, 234, 236, and 255) have a liquid-moun	109.17	T/YR	
TX-0799	BEAUMONT TERMINAL	06/08/2016 ACT	Storage Tanks - EFR	0		Volatile Organic Compounds (VOC)	All 68 EFR tanks are greater than 25 Mgal and store liquids with a TVP less than 11.0	384.37	T/YR	
TX-0799	BEAUMONT TERMINAL	06/08/2016 ACT	Storage Tanks - fixed roof	0		Volatile Organic Compounds (VOC)	Fixed-roof tanks (EPNs 168, 222, 225, 227,229, 254, 256, 257, 258, 259, 475, and 476	72.5	T/YR	
TX-0799	BEAUMONT TERMINAL	06/08/2016 ACT	Storage Tanks Floating Roof MSS	0		Volatile Organic Compounds (VOC)	Landing, degassing, and refilling events will be controlled by a portable VCU or therr	28.83	T/YR	
TX-0808	HOUSTON FUEL OIL TERMINAL	09/02/2016 ACT	Storage Tank	0		Volatile Organic Compounds (VOC)	Insulated, submerged fill, painted white	0.1	T/YR	
TX-0808	HOUSTON FUEL OIL TERMINAL	09/02/2016 ACT	Storage Tanks	0		Volatile Organic Compounds (VOC)	Painted white with mechanical shoe primary seal, rim-mounted secondary seal, slot	6.43	T/YR	
TX-0813	ODESSA PETROCHEMICAL PLANT	11/22/2016 ACT	Petroleum Liquid Storage in Fixed Roof tanks	0		Volatile Organic Compounds (VOC)	Submerged fill pipe, reflective or white exterior paint.	0.01	T/YR	
TX-0825	PASADENA TERMINAL	07/14/2017 ACT	Internal floating roof storage tanks	0		Volatile Organic Compounds (VOC)	IFR equipped with a primary and secondary seal, painted white, and has drain dry flo	165	T/YR	
TX-0825	PASADENA TERMINAL	07/14/2017 ACT	Internal floating roof storage tanks maintenance, startup, and	0		Volatile Organic Compounds (VOC)	Roof landings will be routed to control device for a 99.8% destruction efficiency and	26.28	T/YR	
TX-0825	PASADENA TERMINAL	07/14/2017 ACT	Horizontal fixed roof storage tanks	0		Volatile Organic Compounds (VOC)	painted white, has submerged fill	0.37	T/YR	
TX-0825	PASADENA TERMINAL	07/14/2017 ACT	Horizontal fixed roof storage tanks maintenance, start up, and	0		Volatile Organic Compounds (VOC)	Degassing and refilling losses will be controlled by vapor combustor with a 99.5% de	26.28	T/YR	
TX-0840	CORPUS CHRISTI TERMINAL	10/31/2018 ACT	TANK MSS	0		Volatile Organic Compounds (VOC)	VCU	0		
TX-0847	VALERO PORT ARTHUR REFINERY	09/16/2018 ACT	External Floating roof storage tanks	45000	BBL/HR	Volatile Organic Compounds (VOC)	Tanks will be equipped with Mechanical shoe seal with a secondary rim mounted se	0		
TX-0850	CORPUS CHRISTI TERMINAL	07/15/2018 ACT	Heavy oil storage in fixed roof tank	0		Volatile Organic Compounds (VOC)	Storage of heavy oil (EPN: T-1334) in a fixed roof tank with VP < 0.5 psia, painted wh	0		
*TX-0855	BUCKEYE SOUTH TEXAS GATEWAY TERMINAL	03/13/2019 ACT	Internal Floatin Roof Storage Tanks	0		Volatile Organic Compounds (VOC)	equipped with a primary and secondary seal, painted white, and has drain dry floor	0		
*TX-0855	BUCKEYE SOUTH TEXAS GATEWAY TERMINAL	03/13/2019 ACT	Fixed Roof Tanks	0		Volatile Organic Compounds (VOC)	painted white and equipped with the submerged fill piping.	0		
*TX-0855	BUCKEYE SOUTH TEXAS GATEWAY TERMINAL	03/13/2019 ACT	Storage Tanks MSS	0		Volatile Organic Compounds (VOC)	portable vapor combustion units	0		
*TX-0861	BUCKEYE TEXAS PROCESSING CORPUS CHRISTI FACILITY	08/29/2019 ACT	FIXED ROOF TANKS	0		Volatile Organic Compounds (VOC)	Painted White with Submerged Fill	0		
*TX-0861	BUCKEYE TEXAS PROCESSING CORPUS CHRISTI FACILITY	08/29/2019 ACT	FIXED ROOF TANKS	0		Volatile Organic Compounds (VOC)	Painted White with Submerged Fill	0		
*TX-0861	BUCKEYE TEXAS PROCESSING CORPUS CHRISTI FACILITY	08/29/2019 ACT	IFR TANKS	0		Volatile Organic Compounds (VOC)	Painted White, Submerged Fill, Drain-Dry Design, Mechanical Primary Seal	0		
*TX-0861	BUCKEYE TEXAS PROCESSING CORPUS CHRISTI FACILITY	08/29/2019 ACT	IFR TANKS	0		Volatile Organic Compounds (VOC)	Painted White, Submerged Fill, Drain-Dry Design, Mechanical Primary Seal	0		
*TX-0864	EQUISTAR CHEMICALS CHANNELVIEW COMPLEX	09/09/2019 ACT	Fixed Roof Storage Tanks	0		Volatile Organic Compounds (VOC)	painted white, submerged fill	0		
CA-1180	CHEVRON PRODUCTS CO	08/24/2011 ACT	Recovered oil storage tank, external floating roof with dome	0		Volatile Organic Compounds (VOC)	Requires domes on external floating roof tanks.	0		SEE NOTES
CA-1236	SFPP,LP	03/30/2014 ACT	Internal floating roof storage tank	0		Volatile Organic Compounds (VOC)	Dual rim seals	1763.25	LB	PER YEAR
IL-0115	WOOD RIVER REFINERY	01/23/2015 ACT	STORAGE TANKS A-033-1 AND A-037-1	83000	BBL, EACH	Volatile Organic Compounds (VOC)	IFR; PRIMARY LIQUID-MOUNTED SEAL AND SECONDARY RIM-MOUNTED SEAL.	4.7	TONS/YEAR	12-MONTH RUNNING TOTAL
IL-0118	PHILLIPS 66 PIPELINE LLC	01/23/2015 ACT	Product Storage Tank (Tank 2003)	200000	bbl	Volatile Organic Compounds (VOC)	Internal Floating Roof; primary mechanical shoe seal; secondary rim-mounted seal.	0		
LA-0286	DEEPWATER PORT COMPLEX	07/30/2015 ACT	TANK 6413 (22-14, EQT 48)	0		Volatile Organic Compounds (VOC)	EXTERNAL FLOATING ROOF	0		
LA-0286	DEEPWATER PORT COMPLEX	07/30/2015 ACT	TANK 6415 (23-14, EQT 49)	0		Volatile Organic Compounds (VOC)	EXTERNAL FLOATING ROOF	0		
LA-0286	DEEPWATER PORT COMPLEX	07/30/2015 ACT	TANK 6418 (24-14, EQT 50)	0		Volatile Organic Compounds (VOC)	EXTERNAL FLOATING ROOF	0		
LA-0286	DEEPWATER PORT COMPLEX	07/30/2015 ACT	TANK 6419 (25-14, EQT 51)	0		Volatile Organic Compounds (VOC)	EXTERNAL FLOATING ROOF	0		
LA-0286	DEEPWATER PORT COMPLEX	07/30/2015 ACT	TANK 6420 (26-14, EQT 52)	0		Volatile Organic Compounds (VOC)	EXTERNAL FLOATING ROOF	0		
LA-0286	DEEPWATER PORT COMPLEX	07/30/2015 ACT	TANK 6421 (27-14, EQT 53)	0		Volatile Organic Compounds (VOC)	EXTERNAL FLOATING ROOF	0		
LA-0304	DEEPWATER PORT COMPLEX	11/21/2016 ACT	Tanks 6413, 6415, 6418, 6419, 6420, 6421, & 6422 (EQTs	26093	BBL/D	Volatile Organic Compounds (VOC)	External floating roof; complying with 40 CFR 60.112b(a)(2)(ii) during roof landings;	0		
LA-0304	DEEPWATER PORT COMPLEX	11/21/2016 ACT	Tanks 6423, 6424, 6425, & 6426 (EQTs 55, 56, 57, &	27397	BBL/D	Volatile Organic Compounds (VOC)	External floating roof; complying with 40 CFR 60.112b(a)(2)(ii) during roof landings;	0		
LA-0316	CAMERON LNG FACILITY	02/17/2017 ACT	condensate tanks (3 units)	965000	gallons (each)	Volatile Organic Compounds (VOC)	closed vent system and control devices that meet 40 CFR 60 Subpart Kb	0		
NJ-0083	COLONIAL PIPELINE CO LINDEN JCT TANK FARM	03/11/2014 ACT	26 Internal floating roof storage tanks for materials with RVP 8	2072718	MGAL/YR	Volatile Organic Compounds (VOC)	Vapor combustion unit for cleaning & roof landings	0		
OK-0139	CUSHING TERMINAL CRUDE OIL STORAGE FACILITY	10/25/2010 ACT	Crude Oil Storage in External Floating Roof Tanks	570000	Barrels	Volatile Organic Compounds (VOC)	No controls feasible ; external floating roof tanks.	437.35	TONS	YEAR / FACILITY-WIDE CAP
OK-0175	WILDHORSE TERMINAL	06/29/2017 ACT	250,000 BBL EFR TANKS	10.5	MMBBL/YR/TANK	Volatile Organic Compounds (VOC)	Equipped with EFRs, primary mechanical shoe seals, secondary seals, and drain-dry	6.43	TONS/YR/TANK	12-MONTH
OK-0175	WILDHORSE TERMINAL	06/29/2017 ACT	350,000 BBL EFR TANKS	14.7	MMBBL/YR/TANK	Volatile Organic Compounds (VOC)	Equipped with EFRs, primary mechanical shoe seals, and drain-dry design.	7.47	TON/YR/TANK	12-MONTH
OK-0175	WILDHORSE TERMINAL	06/29/2017 ACT	500,000 BBL EFR TANKS	21	MMBBL/YR/TANK	Volatile Organic Compounds (VOC)	Equipped with EFR, primary mechanical shoe seals, secondary seals, and drain-dry d	8.78	TON/YR/TANK	12-MONTH

OK-0175	WILDHORSE TERMINAL	06/29/2017 ACT	20,000 BBL EFR TANK	840	MMBBL/YR	Volatile Organic Compounds (VOC)	Equipped with EFR, primary mechanical shoe seal, secondary seal, and drain-dry dec	2.16	TON/YR	12-MONTH
OK-0176	BPV GATHERING AND MARKETING CUSHING STATION	07/19/2017 ACT	250,000 BBL EFR TANKS	54450000	BBL/TANK/YEAR	Volatile Organic Compounds (VOC)	Equipped with EFR, primary mechanical shoe seals, secondary seals, and drain-dry d	217.24	TONS/YEAR/FACILITY	12-MONTH
TX-0592	CORPUS CHRISTI WEST REFINERY	03/29/2010 ACT	Tanks	0		Volatile Organic Compounds (VOC)	Land roof <24 hr without control, drain and degas to control until no standing liquid	102	7 LB/H	
TX-0592	CORPUS CHRISTI WEST REFINERY	03/29/2010 ACT	Temporary Tanks	0		Volatile Organic Compounds (VOC)	Submerged filled, white tanks <25,000 gallon capacity	64	LB/H	
TX-0595	CORPUS CHRISTI EAST REFINERY	08/19/2010 ACT	Tanks	0		Volatile Organic Compounds (VOC)	Land roof and keep it landed no more than 24 hrs without control, drain and degas t	1482	LB/H	
TX-0595	CORPUS CHRISTI EAST REFINERY	08/19/2010 ACT	Temporary Tanks	0		Volatile Organic Compounds (VOC)	Submerge filled white tanks with<25,000 gallon capacity	64	LB/H	
*TX-0637	GALENA PARK TERMINAL	10/15/2013 ACT	Petroleum Liquid Storage in loating Roof Tanks	1300000	bbl	Volatile Organic Compounds (VOC)	Welded decks, mechanical shoe primary and rim-mounted secondary seal for stock	14.37	TPY	ROLLING 12 MONTHS AVERAGE
*TX-0653	TEXAS DOCK AND RAIL	02/18/2014 ACT	Petroleum Liquid Marketing; Petroleum Liquid Storage in Float	250	Mbbl	Volatile Organic Compounds (VOC)	For storage of VOC in floating roof tanks, the tanks will have welded decks, mechani	11.23	TPY	ROLLING 12 MONTHS
TX-0745	TEXAS DOCK & RAIL	06/03/2015 ACT	Petroleum Liquids Storage in Floating Roof Tanks - 45 MMbbl	48	turnovers/yr/tank	Volatile Organic Compounds (VOC)	Required floating roof with welded deck seams if the tank will store products with	2.06	TONS/YR/TANK	
TX-0745	TEXAS DOCK & RAIL	06/03/2015 ACT	Petroleum Liquids Storage in Floating Roof Tanks - 50 MMBbl	60	turnovers/yr/tank	Volatile Organic Compounds (VOC)	Required floating roof with welded deck seams if the tank will store products with	4.18	TONS/YR/TANK	(TANKS 5002, 5003)
TX-0745	TEXAS DOCK & RAIL	06/03/2015 ACT	Petroleum Liquids Storage in Floating Roof Tanks -115 MMBbl	60	turnovers/yr/tank	Volatile Organic Compounds (VOC)	Required floating roof with welded deck seams if the tank will store products with	3.71	TONS/YR/TANK	
TX-0745	TEXAS DOCK & RAIL	06/03/2015 ACT	Petroleum Liquids Storage in Floating Roof Tanks - 285 MMBbl	36	turnovers/yr/tank	Volatile Organic Compounds (VOC)	Required floating roof with welded deck seams if the tank will store products with	7.32	TONS/YR/TANK	
TX-0752	INGLESIDE TERMINAL	06/22/2015 ACT	Tank Roof Landings	110	MBBL/YR	Volatile Organic Compounds (VOC)	vapor combustor	4.21	T/YR	
TX-0752	INGLESIDE TERMINAL	06/22/2015 ACT	Storage Tanks	110	MBBL/YR	Volatile Organic Compounds (VOC)		81.57	T/YR	
TX-0797	CORPUS CHRISTI TERMINAL	05/04/2016 ACT	Petroleum Liquid Storage in Floating Roof Tanks	146	MM BBL / YR	Volatile Organic Compounds (VOC)	Petroleum products are stored in floating roof tanks.	24.37	T/YR	PER 400 M BBL TANK
TX-0800	CORPUS CRUDE OIL TERMINAL	06/22/2016 ACT	Storage Tanks	3655000	BBL/YR	Volatile Organic Compounds (VOC)	Crude/Condensate storage tanks will have capacities greater than 25,000 gallons. C	57.42	T/YR	
TX-0800	CORPUS CRUDE OIL TERMINAL	06/22/2016 ACT	Floating Roof Storage Tanks - Controlled Maintenance, Startup	0		Volatile Organic Compounds (VOC)	Landing, degassing, and refilling events will be controlled by a VCU or carbon adsorp	0.8	T/YR	
TX-0812	CRUDE OIL PROCESSING FACILITY	10/31/2016 ACT	Petroleum Liquid Storage in Floating Roof tanks	0		Volatile Organic Compounds (VOC)	Internal floating roof. Integrity of the floating roof seal must be verified through per	3.04	T/YR	PER TANK
TX-0818	FUEL OIL TERMINAL	04/26/2017 ACT	Storage Tanks	45000	BBL/H	Volatile Organic Compounds (VOC)	Painted white with mechanical shoe primary seal, rim-mounted secondary seal, slot	90.36	T/YR	
TX-0818	FUEL OIL TERMINAL	04/26/2017 ACT	STORAGE TANKS MSS	0		Volatile Organic Compounds (VOC)	Tank roof landings are controlled using Carbon Adsorption system with two canister	19.37	T/YR	
TX-0835	CHANNELVIEW TERMINAL	04/13/2018 ACT	IFR STORAGE TANK	31830071	BBL/YR	Volatile Organic Compounds (VOC)	IFR tanks are equipped with welded decks as well as a mechanical shoe and rim-	0		
TX-0844	OXY INGLESIDE ENERGY CENTER	07/25/2018 ACT	STORAGE TANKS MSS	0		Volatile Organic Compounds (VOC)	Roof landings will be routed to control device for a 99.5% destruction efficiency and	0		
TX-0844	OXY INGLESIDE ENERGY CENTER	07/25/2018 ACT	STORAGE TANKS	0		Volatile Organic Compounds (VOC)	- Internal floating roof (IFR)	14	T/YR	
TX-0850	CORPUS CHRISTI TERMINAL	07/15/2018 ACT	Heavy oil storage in fixed roof tank	0		Volatile Organic Compounds (VOC)	Storage of heavy oil (EPN: T-1334) in a fixed roof tank with VP < 0.5 psia, painted wh	0		
TX-0852	CORPUS CHRISTI WATERFRONT TERMINAL	01/02/2019 ACT	IFR TANKS	0		Volatile Organic Compounds (VOC)	IFR equipped with a primary and secondary seal, painted white, and has drain dry flo	0		
VA-0313	TRANSMONTAIGNE NORFOLK TERMINAL	04/22/2010 ACT	Storage Tank Breathing, Working, and Floating Roof Landing Lo	0		Volatile Organic Compounds (VOC)	Floating Roof and Seal Systems meeting NSPS Kb, MACT BBBBBB requirements for T	114.1	T/YR	
WI-0251	ENBRIDGE ENERGY	07/21/2009 ACT	T36-T40 CRUDE OIL STORAGE TANKS			Volatile Organic Compounds (VOC)	EXTERNAL FLOATING ROOF TANK	0.53	T/VOC/MO.	12 MO. AVG., EXCLUDING LANDING EVENTS
WI-0251	ENBRIDGE ENERGY	07/21/2009 ACT	F01 - NEW AND MODIFIED TANKS, NEW PIPELINES, AND ASSOCIATED FUGITIVE VOC			Volatile Organic Compounds (VOC)	USE OF AN INSTRUMENT BASED LEAK DETECTION AND REPAIR (LDAR) PROGRAM,	0		
*WI-0261	ENBRIDGE ENERGY - SUPERIOR TERMINAL	06/12/2014 ACT	Crude Oil Storage Tanks (T43 - T45)	0		Volatile Organic Compounds (VOC)	External Floating Roof tank with double seal. 24.54 million gal. each. Welded tank a	0.88	TONS VOC / MONTH	12 CONSECUTIVE MONTH AVERAGE (PER TANK)
WY-0071	SINCLAIR REFINERY	10/15/2012 ACT	Storage Tank	100	MMbbls	Volatile Organic Compounds (VOC)	External Floating Roof Tank	0		
AR-0124	EL DORADO SAWMILL	08/03/2015 ACT	ELEVEN OIL STORAGE TANKS SN-14	0		Volatile Organic Compounds (VOC)	ENCLOSED TANKS, TANKS ARE LIGHT COLOR	0.3	LB/H	
FL-0328	ENI - HOLY CROSS DRILLING PROJECT	10/27/2011 ACT	Storage Tanks	0		Volatile Organic Compounds (VOC)	Use of good maintenance practices based on the current manufacturerâ€™s specifi	0.27	TONS PER YEAR	12-MONTH ROLLING
FL-0347	ANADARKO PETROLEUM CORPORATION - EGOM	09/16/2014 ACT	Storage Tanks	0		Volatile Organic Compounds (VOC)	Use of good maintenance practices to minimize fugitive emissions, including minimi	0.71	TONS	PER YEAR ON A 12 MONTH ROLLING TOTAL
FL-0347	ANADARKO PETROLEUM CORPORATION - EGOM	09/16/2014 ACT	Condensate Tank	0		Volatile Organic Compounds (VOC)	Use of good maintenance practices to minimize fugitive emissions, including minimi	9.26	TONS	PER YEAR ON A 12-MONTH ROLLING TOTAL
LA-0276	BATON ROUGE JUNCTION FACILITY	12/15/2016 ACT	Tank 190 (EQT0036 - IFR)	0		Volatile Organic Compounds (VOC)	Internal floating roof and submerged fill pipe	0		
LA-0276	BATON ROUGE JUNCTION FACILITY	12/15/2016 ACT	Vertical Fixed Roof Tanks 174, 175, 176	0		Volatile Organic Compounds (VOC)	Submerged fill pipes and pressure/vacuum vents	0		
*LA-0312	ST. JAMES METHANOL PLANT	06/30/2017 ACT	MPST-14 - Methanol Product Surge Tank (EQT0019)	41000	gallons	Volatile Organic Compounds (VOC)	Route emissions to Methanol Product Tanks A & B	0		
*LA-0312	ST. JAMES METHANOL PLANT	06/30/2017 ACT	SV1-14 - Crude Methanol Tank Scrubber Vent (EQT0020)	50	gallons/min	Volatile Organic Compounds (VOC)	Route to reformer fuel gas system except during times of eductor downtime	1.84	LB/HR	
*LA-0312	ST. JAMES METHANOL PLANT	06/30/2017 ACT	MT-13 - Methanol Product Tank A (EQT0014)	54400	barrels	Volatile Organic Compounds (VOC)	Internal Floating Roof Tank and Compliance with NESHAP Subpart G	0		
*LA-0312	ST. JAMES METHANOL PLANT	06/30/2017 ACT	OSMT1-13 - Crude Methanol Tank (EQT0017)	54400	barrels	Volatile Organic Compounds (VOC)	Fixed Roof Tank with Scrubber & Compliance with NESHAP Subpart G	0		
*LA-0312	ST. JAMES METHANOL PLANT	06/30/2017 ACT	MT2-13 - Methanol Product Tank B (EQT0015)	54400	barrels	Volatile Organic Compounds (VOC)	Internal Floating Roof Tank and Compliance with NESHAP Subpart G	0		
MS-0092	EMBERCLEAR GTL MS	05/08/2014 ACT	Storage Tank, crude methanol storage	1470000	GAL	Volatile Organic Compounds (VOC)	Water scrubber	0		
MS-0092	EMBERCLEAR GTL MS	05/08/2014 ACT	Storage Tanks, 2 - methanol day tanks	2940000	GAL, EACH	Volatile Organic Compounds (VOC)	Internal floating roof, white or aluminum surface	0		
TX-0537	LBC HOUSTON BAYPORT TERMINAL	10/26/2009 ACT	TWO NEW STORAGE TANKS			Volatile Organic Compounds (VOC)	IFR CONFIGURATION FOR ROUTINE EMISSIONS @ EACH OF 2 NEW TKS (LIMIT 1)	1.83	T/YR	
TX-0538	LBC HOUSTON BAYPORT TERMINAL	10/26/2009 ACT	TWO NEW STORAGE TANKS			Volatile Organic Compounds (VOC)	IFR CONFIGURATION FOR ROUTINE EMISSIONS @ EACH OF 2 NEW TKS (LIMIT 1)	1.83	T/YR	
TX-0592	CORPUS CHRISTI WEST REFINERY	03/29/2010 ACT	Tanks	0		Volatile Organic Compounds (VOC)	Land roof <24 hr without control, drain and degas to control until no standing liquid	102	7 LB/H	
TX-0592	CORPUS CHRISTI WEST REFINERY	03/29/2010 ACT	Temporary Tanks	0		Volatile Organic Compounds (VOC)	Submerged filled, white tanks <25,000 gallon capacity	64	LB/H	
TX-0595	CORPUS CHRISTI EAST REFINERY	08/19/2010 ACT	Tanks	0		Volatile Organic Compounds (VOC)	Land roof and keep it landed no more than 24 hrs without control, drain and degas t	1482	LB/H	
TX-0595	CORPUS CHRISTI EAST REFINERY	08/19/2010 ACT	Temporary Tanks	0		Volatile Organic Compounds (VOC)	Submerge filled white tanks with<25,000 gallon capacity	64	LB/H	
TX-0613	EAST HOUSTON TERMINAL	04/23/2012 ACT	Storage Tanks	0		Volatile Organic Compounds (VOC)	Internal floating roof with welded seams, mechanical shoe primary seal and rim mo	9	LB/H	
TX-0613	EAST HOUSTON TERMINAL	04/23/2012 ACT	Storage Tanks-MSS	0		Volatile Organic Compounds (VOC)	Vapor space must be routed to control at all times if liquid vapor pressure>0.1 psia.	30	LB/H	
TX-0613	EAST HOUSTON TERMINAL	04/23/2012 ACT	Storage Tank Terminal Piping/Components Fugitives	0		Volatile Organic Compounds (VOC)	28LAER Leak Detection and Repair (LDAR) program. All components monitored qua	0.16	LB/H	
TX-0613	EAST HOUSTON TERMINAL	04/23/2012 ACT	Storage Tank Terminal Piping/Components	0		Volatile Organic Compounds (VOC)	Vent vapors to control if vapor pressure>0.5 psia and maintain control until VOC cor	118	LB/H	
TX-0656	GAS TO GASOLINE PLANT	05/16/2014 ACT	Fixed Roof Tanks (3)	800000	GAL/YR	Volatile Organic Compounds (VOC)	WATER SCRUBBER	1.65	T/YR	
TX-0656	GAS TO GASOLINE PLANT	05/16/2014 ACT	METHANOL AND WATER STORAGE TANK	3087	GAL	Volatile Organic Compounds (VOC)	HORIZONTAL FIXED ROOF WITH SUBMERGED FILL, WHITE EXTERIOR	0.12	T/YR	
TX-0663	JACKSON COUNTY GAS PLANT	05/25/2012 ACT	Produced Water Tanks	0		Volatile Organic Compounds (VOC)	White, submerged fill	0		
TX-0663	JACKSON COUNTY GAS PLANT	05/25/2012 ACT	Fixed Roof Tanks	0		Volatile Organic Compounds (VOC)	White, submerged fill	0		
TX-0682	GALENA PARK TERMINAL	06/12/2013 ACT	Storage Tanks	0		Volatile Organic Compounds (VOC)	Vapor space degassing will be directed to control until VOC level in the tank is less th	5000	PPMV	
TX-0684	ENTERPRISE MONT BELVIEU COMPLEX	11/14/2012 ACT	Tanks	0		Volatile Organic Compounds (VOC)	Proper design and operation of tanks	0.76	LB/H	
TX-0783	LBC HOUSTON BAYPORT TERMINAL	02/05/2016 ACT	Storage Tanks	0		Volatile Organic Compounds (VOC)	Sixteen tanks have internal floating roofs (IFRs) with welded seams, mechanical sho	0.26	T/YR	FOR EACH OF 6 TANKS
TX-0783	LBC HOUSTON BAYPORT TERMINAL	02/05/2016 ACT	Storage Tanks	0		Volatile Organic Compounds (VOC)	Twenty-four fixed roof tanks have submerged fill pipes and are painted white. Thes	0.01	T/YR	FOR EACH TANK
TX-0783	LBC HOUSTON BAYPORT TERMINAL	02/05/2016 ACT	storage tank maintenance	0		Volatile Organic Compounds (VOC)	Vapor combustors will be used to control degassing emissions down to a concentra	5000	PPMV	
TX-0840	CORPUS CHRISTI TERMINAL	10/31/2018 ACT	TANK MSS	0		Volatile Organic Compounds (VOC)	VCU	0		
TX-0850	CORPUS CHRISTI TERMINAL	07/15/2018 ACT	Heavy oil storage in fixed roof tank	0		Volatile Organic Compounds (VOC)	Storage of heavy oil (EPN: T-1334) in a fixed roof tank with VP < 0.5 psia, painted wh	0		
TX-0851	RIO BRAVO PIPELINE FACILITY	12/17/2018 ACT	Natural Gas Liquid Condensate Tanks and Condensate Loading	0		Volatile Organic Compounds (VOC)	THERMAL OXIDIZER	0		
TX-0851	RIO BRAVO PIPELINE FACILITY	12/17/2018 ACT	Liquefied Natural Gas Storage Tanks	0		Volatile Organic Compounds (VOC)	THERMAL OXIDIZER	0		
*TX-0863	POLYETHYLENE 7 FACILITY	09/03/2019 ACT	Storage tanks content vapor pressure less than 0.5 psia	0		Volatile Organic Compounds (VOC)	FLARE	0		
*TX-0863	POLYETHYLENE 7 FACILITY	09/03/2019 ACT	Storage tanks content vapor pressure greater than or equal to	0		Volatile Organic Compounds (VOC)	IFR AND FLARE	0		
VA-0313	TRANSMONTAIGNE NORFOLK TERMINAL	04/22/2010 ACT	Storage Tank Breathing, Working, and Floating Roof Landing Lo	0		Volatile Organic Compounds (VOC)	Floating Roof and Seal Systems meeting NSPS Kb, MACT BBBBBB requirements for T	114.1	T/YR	

7. LOADING AND UNLOADING (RLBC CODES 42.002, 42.010, 50.004 & 50.999)

RBLC SUMMARY FOR LOADING AND UNLOADING - VOC										
RBLCID	FACILITY_NAME	PERMIT_ISSUANCE_DATE	PROCESS_NAME	THROUGHPUT	THROUGHPUT_UNIT	POLLUTANT	CONTROL_METHOD_DESCRIPTION	EMISSION_LIMIT_1	EMISSION_LIMIT_1_UNIT	EMISSION_LIMIT_1_AVG_TIME_CONDITION
CA-1226	SFPP,LP	06/21/2011 ACT	FUEL CARGO TANK UNLOADING STATION	330	GPM TRANSFER PUMP	Volatile Organic Compounds (VOC)	DIRECT PUMP TO IFR TANK THROUGH DEAERATOR	7.24	LB/D	
CA-1230	SFPP,LP	03/05/2010 ACT	internal floating roof-denatured etahnol cargo tank unloading station	325	gallons	Volatile Organic Compounds (VOC)	DIRECT PUMP TO IFR TANK-INTERGRAL VALVES FOR DRY DISCONNECT	13.39	LB/D	
IN-0231	COUNTRYMARK REFINING & LOGISTICS, LLC	06/30/2015 ACT	TRUCK LOADING RACK	46200	GAL/H	Volatile Organic Compounds (VOC)	test method -1	35	MG/LITER	
IN-0243	MARATHON PETROLEUM COMPANY LP	08/14/2015 ACT	LOADING RACK	741.2	MMGAL	Volatile Organic Compounds (VOC)	VAPOR RECOVERY UNIT [CARBON ADSORPTION]	0.159	LB/GAL	
IN-0244	COUNTRYMARK REFINING AND LOGISTICS, LLC	12/03/2015 ACT	LOADING RACK	404.71	MMGAL	Volatile Organic Compounds (VOC)	RELIEF STACK, A VAPOR KNOCKOUT BOX, AND A FLARE VAPOR CONTROL UNIT	35	MG/L	
NJ-0083	COLONIAL PIPELINE CO LINDEN JCT TANK FARM	03/11/2014 ACT	Light Products Loading Rack	441.5	MMgal/yr	Volatile Organic Compounds (VOC)	Vapor Recovery Unit	0.42	LB/H	
TX-0656	GAS TO GASOLINE PLANT	05/16/2014 ACT	RAILCAR AND TRUCK LOADING	300000000	GAL/YR	Volatile Organic Compounds (VOC)	WATER SCRUBBER	1.38	T/YR	
TX-0752	INGLESIDE TERMINAL	06/22/2015 ACT	Loading	110	MBBL/YR	Volatile Organic Compounds (VOC)	vapor combustor	126.1	T/YR	
TX-0799	BEAUMONT TERMINAL	06/08/2016 ACT	Marine Loading	0		Volatile Organic Compounds (VOC)	Marine loading operations are loaded into MACT-Y vapor tight vessels for controlled for materials with a TVP of 0.5 psi	24.5	T/YR	
TX-0799	BEAUMONT TERMINAL	06/08/2016 ACT	Truck and railcar loading	0		Volatile Organic Compounds (VOC)	Loading vapors of materials with a TVP of 0.5 psia or greater are controlled by a flare. Railcar capture efficiency of 100	28.83	T/YR	
TX-0825	PASADENA TERMINAL	07/14/2017 ACT	Marine Vessel Ship Loading	30000	BBL/HR	Volatile Organic Compounds (VOC)	Captured vapors will be routed to vapor recovery units (VRU) capable of achieving 1 milligram VOC per liter of VOC loa	1	MG/LTR	
TX-0825	PASADENA TERMINAL	07/14/2017 ACT	Marine Barge Loading	0		Volatile Organic Compounds (VOC)	100% of vapors will be captured with vacuum loading and routed to a vapor recovery unit.	71.36	T/YR	
TX-0825	PASADENA TERMINAL	07/14/2017 ACT	Uncaptured Marine Loading Fugitives From Ships	0		Volatile Organic Compounds (VOC)	A minimum of three vessels per year for five years will undergo VOC collection efficiency testing to ensure compliance	23.66	T/YR	
TX-0825	PASADENA TERMINAL	07/14/2017 ACT	Tank Truck Loading	120000	GAL/HR	Volatile Organic Compounds (VOC)	All loading will be submerged fill and vented to a vapor recovery unit. Vapor collection system will operate with 100%	1	MG/LTR	
TX-0825	PASADENA TERMINAL	07/14/2017 ACT	Tank Truck Loading	120000	GAL/HR	Volatile Organic Compounds (VOC)	All loading will be submerged fill and vented to a vapor recovery unit. Air eliminator venting will result in emissions to	4.48	T/YR	
TX-0825	PASADENA TERMINAL	07/14/2017 ACT	Tank Truck Unloading	0		Volatile Organic Compounds (VOC)	Specialized connection system of transfer valves that minimize the volume of piping containing residual butane after d	33	T/YR	
*TX-0855	BUCKEYE SOUTH TEXAS GATEWAY TERMINAL	03/13/2019 ACT	Loading	0		Volatile Organic Compounds (VOC)	vapor combustion units	0		
*TX-0855	BUCKEYE SOUTH TEXAS GATEWAY TERMINAL	03/13/2019 ACT	Loading during MSS via Vacuum Truck	0		Volatile Organic Compounds (VOC)	Carbon Absorption System	100	PPMV	BREAKTHROUGH
IA-0213	ST. CHARLES REFINERY	11/17/2009 ACT	PETROLEUM PRODUCT LOADING DOCKS (94-9)			Volatile Organic Compounds (VOC)	COMPLY WITH LAC 33:III.2108 FOR LOADING MATERIALS WITH VAPOR PRESSURE > 1.5 PSIA	687	LB/H	HOURLY MAXIMUM
IA-0213	ST. CHARLES REFINERY	11/17/2009 ACT	LOADINGS - REFINERY			Volatile Organic Compounds (VOC)	TRUCK/RAILCAR LOADING: COMPLY WITH 40 CFR 63 SUBPART CC	0		SEE NOTE
IA-0213	ST. CHARLES REFINERY	11/17/2009 ACT	LOADINGS - AROMATIC RECOVERY UNIT			Volatile Organic Compounds (VOC)	MARINE LOADING: COMPLY WITH 40 CFR 61 SUBPART BB	0		SEE NOTE
IA-0284	ALLIANCE REFINERY	09/02/2015 ACT	Product Dock No. 1 or 2 Marine Vapor Recovery Loading (406-D-15, EQT 75)	630000	GALS/HR	Volatile Organic Compounds (VOC)	FLARE	0.071	LB/1000 GALS	
IA-0284	ALLIANCE REFINERY	09/02/2015 ACT	Product Dock No. 1 or 2 Marine Vapor Recovery Loading (406-D-16, EQT 76)	630000	GALS/HR	Volatile Organic Compounds (VOC)	FLARE	0.071	LB/1000 GALS	
IA-0284	ALLIANCE REFINERY	09/02/2015 ACT	Product Dock No. 1 Non-MVR loading (406-1, EQT 77)	630000	GALS/HR	Volatile Organic Compounds (VOC)		0.206	LB/1000 GALS	SEE NOTES
IA-0284	ALLIANCE REFINERY	09/02/2015 ACT	Product Dock No. 3 Non-MVR loading (406-3, EQT 198)	630000	GALS/HR	Volatile Organic Compounds (VOC)		0.206	LB/1000 GALS	SEE NOTES
IA-0284	ALLIANCE REFINERY	09/02/2015 ACT	Unit Fugitives for Loading Docks (406-FF, FUG 11)	0		Volatile Organic Compounds (VOC)	LDAR: 40 CFR 63 Subpart H	0		
IA-0284	ALLIANCE REFINERY	09/02/2015 ACT	Product Dock No. 2 Non-MVR loading (406-2, EQT 78)	630000	GALS/HR	Volatile Organic Compounds (VOC)		0.206	LB/1000 GALS	SEE NOTES
IA-0316	CAMERON LNG FACILITY	02/17/2017 ACT	condensate loading	60240	bbls/yr	Volatile Organic Compounds (VOC)	good equipment design and proper operating practices; vapor balanced loading	0		
OH-0308	SUN COMPANY, INC., TOLEDO REFINERY	02/23/2009 ACT	PROPYLENE-PROPANE LOADING RACK	34224600	GAL/YR	Volatile Organic Compounds (VOC)	PRESSURIZED LOADING	1.6	T/YR	PER ROLLING 12-MONTH PERIOD
IA-0213	ST. CHARLES REFINERY	11/17/2009 ACT	PETROLEUM PRODUCT LOADING DOCKS (94-9)			Volatile Organic Compounds (VOC)	COMPLY WITH LAC 33:III.2108 FOR LOADING MATERIALS WITH VAPOR PRESSURE > 1.5 PSIA	687	LB/H	HOURLY MAXIMUM
IA-0213	ST. CHARLES REFINERY	11/17/2009 ACT	LOADINGS - REFINERY			Volatile Organic Compounds (VOC)	TRUCK/RAILCAR LOADING: COMPLY WITH 40 CFR 63 SUBPART CC	0		SEE NOTE
IA-0213	ST. CHARLES REFINERY	11/17/2009 ACT	LOADINGS - AROMATIC RECOVERY UNIT			Volatile Organic Compounds (VOC)	MARINE LOADING: COMPLY WITH 40 CFR 61 SUBPART BB	0		SEE NOTE
OH-0308	SUN COMPANY, INC., TOLEDO REFINERY	02/23/2009 ACT	PROPYLENE-PROPANE LOADING RACK	34224600	GAL/YR	Volatile Organic Compounds (VOC)	PRESSURIZED LOADING	1.6	T/YR	PER ROLLING 12-MONTH PERIOD
OK-0148	BUFFALO CREEK PROCESSING PLANT	09/12/2012 ACT	Truck Loading (Petroleum Marketing)	1.46	MMBPY	Volatile Organic Compounds (VOC)	Vapor Balance.	1.6	LB/1000 GAL	
OK-0153	ROSE VALLEY PLANT	03/01/2013 ACT	CONDENSATE TRUCK LOADING	9198000	GAL/YR	Volatile Organic Compounds (VOC)	ENCLOSED FLARE	7.06	TPY	
TX-0722	ORGANIC CHEMICAL MANUFACTURING	03/14/2014 ACT	Loading	0		Volatile Organic Compounds (VOC)	Volatile materials with vapor pressure less than 0.5 psia are to be submerged or bottom filled.	0.01	LB/1,000 GAL	
TX-0756	CCI CORPUS CHRISTI CONDENSATE SPLITTER FACILITY	06/19/2015 ACT	Barge Loading	0		Volatile Organic Compounds (VOC)	combuster capable of achieving 99% DRE of VOC. Barges in naphtha service will be required to undergo annual leak	48.01	LB/HR	
TX-0756	CCI CORPUS CHRISTI CONDENSATE SPLITTER FACILITY	06/19/2015 ACT	Ship Loading	0		Volatile Organic Compounds (VOC)	During loading of naphthas (vapor pressure > or =0.5 psia), loading losses will be directed to a marine vapor	208.6	LB/HR	
TX-0756	CCI CORPUS CHRISTI CONDENSATE SPLITTER FACILITY	06/19/2015 ACT	Truck Loading	0		Volatile Organic Compounds (VOC)		1.99	LB/HR	
TX-0790	PORT ARTHUR LNG EXPORT TERMINAL	02/17/2016 ACT	LNG Export Acid Gas Recovery, Tanks & Loading	0		Volatile Organic Compounds (VOC)	Thermal oxidizers with min temperature 1400	0		
TX-0851	RIO BRAVO PIPELINE FACILITY	12/17/2018 ACT	Natural Gas Liquid Condensate Tanks and Condensate Loading	0		Volatile Organic Compounds (VOC)	THERMAL OXIDIZER	0		

8. FUGITIVES (RLBC CODE 50.007)

RBLC SUMMARY FOR FUGITIVES - VOC										
RBLCID	FACILITY_NAME	PERMIT_ISSUANCE_DATE	PROCESS_NAME	THROUGHPUT	THROUGHPUT_UNIT	POLLUTANT	CONTROL_METHOD_DESCRIPTION	EMISSION_LIMIT_1	EMISSION_LIMIT_1_UNIT	EMISSION_LIMIT_1_AVG_TIME_CONDITION
IL-0115	WOOD RIVER REFINERY	01/23/2015 ACT	EQUIPMENT LEAKS/FUGITIVE EMISSIONS	0		Volatile Organic Compounds (VOC)	LDAR BUT LOWER LEAK DEFINITION FOR VALVES IN G/LL SERVICE (500 PPM) AND PUMP SEALS IN LL (2000 PPM); LOW EMISSION	0		
IL-0119	PHILLIPS 66 PIPELINE LLC	01/23/2015 ACT	Equipment Leaks / Fugitive Emissions	0		Volatile Organic Compounds (VOC)	LDAR	0		
LA-0197	ALLIANCE REFINERY	07/21/2009 ACT	UNIT FUGITIVES			Volatile Organic Compounds (VOC)	LEAK DETECTION AND REPAIR PROGRAM - LOUISIANA REFINERY MACT DETERMINATION DATED JULY 26, 1994	13.22	LB/H	HOURLY MAXIMUM
LA-0213	ST. CHARLES REFINERY	11/17/2009 ACT	FUGITIVE EMISSIONS			Volatile Organic Compounds (VOC)	REFINERY (90-0): LA REFINERY MACT LDAR PROGRAM;	0		SEE NOTE
LA-0245	HYDROGEN PLANT	12/15/2010 ACT	Hydrogen Plant Fugitives (FUG0030)	0		Volatile Organic Compounds (VOC)	LDAR program that meets LA Refinery MACT with Consent Decree Enhancements (July 26, 1994)	23.74	T/YR	
LA-0282	ALLIANCE REFINERY	04/02/2015 ACT	Unit Fugitives for the Low Sulfur Gasoline Unit (294-FF, FUG 0004)	0		Volatile Organic Compounds (VOC)	Louisiana MACT Determination for Refinery Equipment Leaks (Fugitive Emission Sources) dated July 26, 1994	15.43	LB/HR	HOURLY AVERAGE
LA-0283	ALLIANCE REFINERY	08/14/2015 ACT	UNIT FUGITIVES FOR LOW SULFUR GASOLINE UNIT (294-FF, FUG 0004)	0		Volatile Organic Compounds (VOC)	LDAR: Louisiana MACT Determination for Refinery Equipment Leaks (Fugitive Emission Sources) dated July 26, 1994	15.43	LB/HR	HOURLY AVERAGE
LA-0284	ALLIANCE REFINERY	09/02/2015 ACT	Unit Fugitives for Loading Docks (406-FF, FUG 11)	0		Volatile Organic Compounds (VOC)	LDAR: 40 CFR 63 Subpart H	0		
LA-0316	CAMERON LNG FACILITY	02/17/2017 ACT	fugitive emissions	0		Volatile Organic Compounds (VOC)	Complying with LAC 33:III.2111	0		
TX-0684	ENTERPRISE MONT BELVIEU COMPLEX	11/14/2012 ACT	Fugitive Components	0		Volatile Organic Compounds (VOC)	28LAER leak detection and repair program	1.29	LB/H	
TX-0731	CORPUS CHRISTI TERMINAL CONDENSATE SPLITTER	04/10/2015 ACT	, Petroleum Refining Equipment Leaks/Fugitive Emissions	100000	Bbl/day	Volatile Organic Compounds (VOC)	Quarterly instrumental monitoring using a method 21 gas analyzer for all valves, pump seals, compressor seals, and agitator seals	36.6	TPY	
TX-0756	CCI CORPUS CHRISTI CONDENSATE SPLITTER FACILITY	06/19/2015 ACT	Fugitive Components	0		Volatile Organic Compounds (VOC)	Fugitive Leak Detection and Repair (LDAR) program that requires quarterly monitoring of valves with a leak definition of 500 ppm	500	PPMV	VALVES
TX-0759	PORT ARTHUR REFINERY	07/31/2015 ACT	Hydrocracking and Hydro-treating Fugitive Components	105	K BBL/DAY	Volatile Organic Compounds (VOC)	Enhanced Fugitive Leak Detection and Repair (LDAR) program that requires quarterly monitoring of valves, pumps, and	500	PPM	VALVES, PUMPS, SEALS
TX-0760	CORPUS CHRISTI TERMINAL	08/06/2015 ACT	Fugitives	0		Volatile Organic Compounds (VOC)	Fugitive Leak Detection and Repair (LDAR) per the 28 MID Monitoring program that requires quarterly monitoring of all compone	500	PPMV	
TX-0765	SUNOCO MARINE VESSEL LOADING OPERATIONS	09/18/2015 ACT	Petroleum Refining Equipment Leaks/Fugitive Emissions	100	MMbbl/yr	Volatile Organic Compounds (VOC)	Quarterly instrumental monitoring using a method 21 gas analyzer for all valves, pump seals, compressor seals, and agitator seals	10.13	TPY	
TX-0797	CORPUS CHRISTI TERMINAL	05/04/2016 ACT	Petroleum Refining Equipment Leaks/Fugitive Emissions	0		Volatile Organic Compounds (VOC)	Fugitive Leak Detection and Repair (LDAR) per the 28 MID Monitoring program that requires quarterly monitoring of all compone	500	PPM	
TX-0840	CORPUS CHRISTI TERMINAL	10/31/2018 ACT	FUGITIVES	0		Volatile Organic Compounds (VOC)	Fugitive Leak Detection and Repair (LDAR) per the 28 MID Monitoring program that requires quarterly monitoring of all compone	0		
TX-0847	VALERO PORT ARTHUR REFINERY	09/16/2018 ACT	Equipment Leaks/Fugitive Emissions	0		Volatile Organic Compounds (VOC)	28 VHP	0		
TX-0850	CORPUS CHRISTI TERMINAL	07/15/2018 ACT	FUGITIVES	0		Volatile Organic Compounds (VOC)	28 MID	0		
TX-0851	RIO BRAVO PIPELINE FACILITY	12/17/2018 ACT	FUGITIVES	0		Volatile Organic Compounds (VOC)	28VHP	0		
TX-0852	CORPUS CHRISTI WATERFRONT TERMINAL	01/02/2019 ACT	Fugitive Components	0		Volatile Organic Compounds (VOC)	28LAER	0		
*TX-0855	BUCKEYE SOUTH TEXAS GATEWAY TERMINAL	03/13/2019 ACT	Fugitives	0		Volatile Organic Compounds (VOC)	28 VHP, 28PI LDAR	0		
*TX-0861	BUCKEYE TEXAS PROCESSING CORPUS CHRISTI FACILITY	08/29/2019 ACT	FUGITIVES	0		Volatile Organic Compounds (VOC)	28VHP LDAR	0		
*TX-0864	EQUISTAR CHEMICALS CHANNELVIEW COMPLEX	09/09/2019 ACT	Fugitive Components	0		Volatile Organic Compounds (VOC)	28LAER & 28PI	500	PPMV	
*TX-0865	EQUISTAR CHEMICALS CHANNELVIEW COMPLEX	09/09/2019 ACT	FUGITIVES	0		Volatile Organic Compounds (VOC)	28LAER, 28PI LDAR	0		
*WI-0279	CORPORATE/COMPANY NAMEENBRIDGE ENERGY LIMITED	10/02/2017 ACT	Process Name‰01 â€" Piping Component/Pumping Fugitive	0		Volatile Organic Compounds (VOC)	Complying with Leak Detection and Repair (LDAR) Program	0		

RBLC SUMMARY FOR FUGITIVES - CO_2e										
RBLCID	FACILITY_NAME	PERMIT_ISSUANCE_DATE	PROCESS_NAME	THROUGHPUT	THROUGHPUT_UNIT	POLLUTANT	CONTROL_METHOD_DESCRIPTION	EMISSION_LIMIT_1	EMISSION_LIMIT_1_UNIT	EMISSION_LIMIT_1_AVG_TIME_CONDITION
LA-0316	CAMERON LNG FACILITY	02/17/2017 ACT	fugitive emissions	0		Carbon Dioxide Equivalent (CO2e)	Implement a leak detection and repair (LDAR) program to minimize the leak	0		
TX-0759	PORT ARTHUR REFINERY	07/31/2015 ACT	Hydrocracking and Hydro-treating Fugitive Components	105	K BBL/DAY	Carbon Dioxide Equivalent (CO2e)	Enhanced Fugitive Leak Detection and Repair (LDAR) program that requires quarterly	500	PPMV	
TX-0801	PL PROPYLENE HOUSTON OLEFINS PLANT	06/24/2016 ACT	Fugitives	0		Carbon Dioxide Equivalent (CO2e)	LDAR 28LAER	0		
TX-0847	VALERO PORT ARTHUR REFINERY	09/16/2018 ACT	Equipment Leaks/Fugitive Emissions	0		Carbon Dioxide Equivalent (CO2e)	28 VHP	0		
TX-0851	RIO BRAVO PIPELINE FACILITY	12/17/2018 ACT	FUGITIVES	0		Carbon Dioxide Equivalent (CO2e)	28 VHP	0		
*TX-0864	EQUISTAR CHEMICALS CHANNELVIEW COMPLEX	09/09/2019 ACT	Fugitive Components	0		Carbon Dioxide Equivalent (CO2e)	LDAR	500	PPMV	
*TX-0865	EQUISTAR CHEMICALS CHANNELVIEW COMPLEX	09/09/2019 ACT	FUGITIVES	0		Carbon Dioxide Equivalent (CO2e)	28LAER & 28PI LDAR	0		

9. AMINE UNITS (RLBC CODES 50.002 & 50.006)

RBLC SUMMARY FOR AMINE UNITS - VOC										
RBLCID	FACILITY_NAME	PERMIT_ISSUANCE_DATE	PROCESS_NAME	THROUGHPUT	THROUGHPUT_UNIT	POLLUTANT	CONTROL_METHOD_DESCRIPTION	EMISSION_LIMIT_1	EMISSION_LIMIT_1_UNIT	EMISSION_LIMIT_1_AVG_TIME_CONDITION
OK-0148	BUFFALO CREEK PROCESSING PLANT	09/12/2012 ACT	Amine Unit / Sweetening Unit	230	MMSCFD	Volatile Organic Compounds (VOC)	Flare.	0		
OK-0153	ROSE VALLEY PLANT	03/01/2013 ACT	AMINE UNITS - STILL VENT	20000	BBL/D	Volatile Organic Compounds (VOC)	GOOD OPERATING PRACTICES.	5.59	TPY	
OK-0153	ROSE VALLEY PLANT	03/01/2013 ACT	AMINE UNITS - FLASH TANK	20000	BBL/D	Volatile Organic Compounds (VOC)	ROUTE FLASH TANK EMISSIONS TO A HOT OIL HEATER, A RE	1.8	TPY	
TX-0849	MONT BELVIEU	10/16/2018 ACT	AMINE UNITS	0		Volatile Organic Compounds (VOC)	The gas is routed to the plant fuel system during normal ope	0		
OH-0357	BP-HUSKY REFINING LLC	09/20/2013 ACT	Amine Treating Unit	0		Volatile Organic Compounds (VOC)		5	T/YR	FROM EQUIPMENT LEAKS

RBLC SUMMARY FOR AMINE UNITS - CO_2e										
RBLCID	FACILITY_NAME	PERMIT_ISSUANCE_DATE	PROCESS_NAME	THROUGHPUT	THROUGHPUT_UNIT	POLLUTANT	CONTROL_METHOD_DESCRIPTION	EMISSION_LIMIT_1	EMISSION_LIMIT_1_UNIT	EMISSION_LIMIT_1_AVG_TIME_CONDITION
CO-0067	LANCASTER PLANT	06/04/2013 ACT	Four Amine units	600	mmscf/day	Carbon Dioxide Equivalent (CO2e)	Thermal oxidizers	0		
CO-0068	LUCERNE GAS PROCESSING PLANT	01/13/2014 ACT	Amine Unit	230	mmscf/day	Carbon Dioxide Equivalent (CO2e)	amine flash tank stream shall be routed to a closed loop vapor recovery unit and b	154337	TON CO2E	PER YEAR
OK-0148	BUFFALO CREEK PROCESSING PLANT	09/12/2012 ACT	Amine Unit / Sweetening Unit	230	MMSCFD	Carbon Dioxide Equivalent (CO2e)	Flare.	0		
OK-0153	ROSE VALLEY PLANT	03/01/2013 ACT	AMINE UNITS - STILL VENT	20000	BBL/D	Carbon Dioxide Equivalent (CO2e)	GOOD OPERATING PRACTICES.	8116	TPY	

10. UNPAVED HAUL ROADS (RLBC CODE 99.150)

RBLC SUMMARY FOR HAUL ROADS - PM										
RBLCID	FACILITY_NAME	PERMIT_ISSUANCE_DATE	PROCESS_NAME	THROUGHPUT	THROUGHPUT_UNIT	POLLUTANT	CONTROL_METHOD_DESCRIPTION	EMISSION_LIMIT_1	EMISSION_LIMIT_1_UNIT	EMISSION_LIMIT_1_AVG_TIME_CONDITION
*AK-0084	DONLIN GOLD PROJECT	06/30/2017 ACT	Fugitive Dust from Unpaved Roads	5024900	VMT/yr	Particulate matter, total (TPM)	Water and Chemical Suppressant Spray	3500	TPY	YEARLY
*AK-0084	DONLIN GOLD PROJECT	06/30/2017 ACT	Fugitive Dust from Unpaved Roads	5024900	VMT/yr	Particulate matter, total < 10 Âµ (TPM10)	Water and Chemical Suppressant Spray	3500	TPY	YEARLY
*AK-0084	DONLIN GOLD PROJECT	06/30/2017 ACT	Fugitive Dust from Unpaved Roads	5024900	VMT/yr	Particulate matter, total < 2.5 Âµ (TPM2.5)	Water and Chemical Suppressant Spray	3500	TPY	YEARLY
AR-0124	EL DORADO SAWMILL	08/03/2015 ACT	HAUL ROADS SN-09	0		Particulate matter, total (TPM)	ROAD WATERING PLAN + 0% OFF-SITE OPACITY	12.7	LB/H	
CO-0074	RIO GRANDE CEMENT PLANT	07/09/2012 ACT	Haul roads	0		Particulate matter, filterable < 10 Âµ (FPM10)	Plant roads â€" since almost all plant roads are already paved and are actively swept, BACT was	0		
*FL-0368	NUCOR STEEL FLORIDA FACILITY	02/14/2019 ACT	Roads	0		Particulate matter, fugitive	Fugitive Dust Control Plan	0		
*KS-0034	ABENGOA BIOENERGY BIOMASS OF KANSAS (ABBK)	05/27/2014 ACT	Biomass Laydown Roads (Unpaved)	0		Particulate matter, total (TPM)	Truck traffic fugitive control strategy and monitoring plan, including sweeping and speed limits	109	TRUCKS/DAY	7 DAY ROLLING AVERAGE
*KS-0034	ABENGOA BIOENERGY BIOMASS OF KANSAS (ABBK)	05/27/2014 ACT	Biomass Laydown Roads (Unpaved)	0		Particulate matter, total < 10 Âµ (TPM10)	Truck traffic fugitive control strategy and monitoring plan, including sweeping and speed limits	109	TRUCKS/DAY	7 DAY ROLLING AVERAGE
*KS-0034	ABENGOA BIOENERGY BIOMASS OF KANSAS (ABBK)	05/27/2014 ACT	Biomass Laydown Roads (Unpaved)	0		Particulate matter, total < 2.5 Âµ (TPM2.5)	Truck traffic fugitive control strategy and monitoring plan, including sweeping and speed limits	109	TRUCKS/DAY	7 DAY ROLLING AVERAGE
LA-0239	NUCOR STEEL LOUISIANA	05/24/2010 ACT	FUG-101 - Unpaved Road Fugitive Dust	0		Particulate matter, filterable (FPM)	BACT for road dust is to pave roadways where practicable including areas where the extra heavy vehicl	18.69	LB/H	
LA-0240	FLOPAM INC.	06/14/2010 ACT	Roadway Fugitives	0		Particulate matter, total (TPM)	Main roadway shall be paved where practical. Precautions shall be taken to prevent dust from becomi	0.04	LB/H	HOURLY MAXIMUM
LA-0240	FLOPAM INC.	06/14/2010 ACT	Roadway Fugitives	0		Particulate matter, total < 10 Âµ (TPM10)	Main roadway shall be paved where practical. Precautions shall be taken to prevent dust from becomi	0.04	LB/H	HOURLY MAXIMUM
MO-0080	HOLCIM (US) INC. - LEE ISLAND	05/05/2009 ACT	Paved and unpaved roads and storage piles	0		Particulate matter, fugitive	Surfactant spray or periodic water spray on quarry haul roads. The pavement of haul roads that is used	0		
OH-0341	NUCOR STEEL MARION, INC.	12/23/2010 ACT	Roadways	8375	MI/YR	Particulate matter, fugitive	Best available control measures to include watering, resurfacing, chemical stabilization, and/or speed r	30.64	T/YR	PER ROLLING 12 MONTHS FOR FUGITIVE PM
OH-0344	V & M STAR	01/27/2011 ACT	Paver and unpaved roadways and parking areas	0		Particulate matter, fugitive	Employ best available control measures: watering, sweeping, chemical stabilization, or suppressants ap	7.7	T/YR	LESS THAN 10 MICRONS FUGITIVE
OH-0379	PETMIN USA INCORPORATED	02/06/2019 ACT	Plant Roadways (F001)	4195	MI/YR	Particulate matter, total < 10 Âµ (TPM10)	Use of wet suppression and commercial dust suppressants.	0.21	T/YR	
OH-0379	PETMIN USA INCORPORATED	02/06/2019 ACT	Plant Roadways (F001)	4195	MI/YR	Particulate matter, total < 2.5 Âµ (TPM2.5)	Use of wet suppression and commercial dust suppressants.	0.02	T/YR	
OK-0173	CMC STEEL OKLAHOMA	01/19/2016 ACT	Unpaved Roads	0		Particulate matter, total < 10 Âµ (TPM10)	BACT for PM emissions from roads is selected as work-practice standards of paving roads, sweeping the	0		

11. SSM ACTIVITIES (RLBC CODES 19.300, 42.004, 42.006, & 42.010)

RBLCSUMMARYFORSSM ACTIVITIES - VOC										
RBLCID	FACILITY_NAME	PERMIT_ISSUANCE_DATE	PROCESS_NAME	THROUGHPUT	THROUGHPUT_UNIT	POLLUTANT	CONTROL_METHOD_DESCRIPTION	EMISSION_LIMIT_1	EMISSION_LIMIT_1_UNIT	EMISSION_LIMIT_1_AVG_TIME_CONDITION
AR-0121	EL DORADO CHEMICAL COMPANY	11/18/2013 ACT	AMMONIA PLANT PROCESS SSM FLARE	0.0	MMBTU/H	Volatile Organic Compounds (VOC)	GOOD COMBUSTION PRACTICE	0.0051	LB/H	ROLLING 3 HOUR AVERAGE
TX-0574	VALERO THREE RIVERS REFINERY	08/19/2010 ACT	FLARE MSS	0		Volatile Organic Compounds (VOC)	BEST PRACTICES	0		SEE NOTE
TX-0574	VALERO THREE RIVERS REFINERY	08/19/2010 ACT	MSS FOR PROCESS EQUIPMENT AND STORAGE TANKS	0		Volatile Organic Compounds (VOC)	VENT TO CONTROL UNTIL VOC CONCENTRATION < 10,000 PPMV	0		SEE NOTE
TX-0722	ORGANIC CHEMICAL MANUFACTURING	03/14/2014 ACT	MSS	0		Volatile Organic Compounds (VOC)	Process equipment will only be opened for inspection and maintenance after purging to the flare to minimize VOC content down to <10,000 ppmv or 10% of the LEL	10000	PPMV	
TX-0823	LYONDELL CHEMICAL BAYPORT CHOATE PLANT	05/07/2017 ACT	MSS	0		Volatile Organic Compounds (VOC)	preparations for equipment openings, storage tank maintenance, vacuum truck operations; controlled landed roof operations, with off-float emissions routed to flare; pumping process and residual storage	0		
*TX-0861	BUCKEYE TEXAS PROCESSING CORPUS CHRISTI FACILITY	08/29/2019 ACT	IFR ROOF LANDINGS (MSS)	0		Volatile Organic Compounds (VOC)	STEAM ASSISTED FLARE	0		
TX-0756	CCI CORPUS CHRISTI CONDENSATE SPLITTER FACILITY	06/19/2015 ACT	Floating Roof Storage Tanks - Controlled Maintenance, Startup and Shutdown (MSS)	5000	scf/hr	Volatile Organic Compounds (VOC)	Vapor space under the landed floating roof is degassed to a flare meeting the requirements 40CFR60.18 until VOC concentration is 10,000 ppmv or less.	10000	PPMV	
TX-0799	BEAUMONT TERMINAL	06/08/2016 ACT	Storage Tanks Floating Roof MSS	0		Volatile Organic Compounds (VOC)	Landing, degassing, and refilling events will be controlled by a portable VCU or thermal oxidizer meeting TCEQ BACT. Degassing will begin within 24 hours of roof landing. All new tanks have drain dry design	28.83	T/YR	
TX-0800	CORPUS CRUDE OIL TERMINAL	06/22/2016 ACT	Floating Roof Storage Tanks - Controlled Maintenance, Startup and Shutdown (MSS)	0		Volatile Organic Compounds (VOC)	Landing, degassing, and refilling events will be controlled by a VCU or carbon adsorption unit. Degassing will begin within 24 hours of roof landing. All new tanks will be of drain-dry design.	0.87	T/YR	
TX-0818	FUEL OIL TERMINAL	04/26/2017 ACT	STORAGE TANKS MSS	0		Volatile Organic Compounds (VOC)	Tank roof landings are controlled using Carbon Adsorption system with two canisters in series and hourly breakthrough monitoring.	19.37	T/YR	
TX-0840	CORPUS CHRISTI TERMINAL	10/31/2018 ACT	TANK MSS	0		Volatile Organic Compounds (VOC)	VCU	0		
TX-0844	CKY INGLESIDE ENERGY CENTER	07/25/2018 ACT	STORAGE TANKS MSS	0		Volatile Organic Compounds (VOC)	Roof landings will be routed to control device for a 99.5% destruction efficiency and refilling losses will be controlled by a portable vapor combustor unit with a 99.5% collection efficiency.	0		
TX-0850	CORPUS CHRISTI TERMINAL	07/15/2018 ACT	IFR & EFR MSS	0		Volatile Organic Compounds (VOC)	Landing, degassing, and refilling events and associated frac tank and vacuum truck emissions routed to VCU with 99% DRE. The tank MSS will not occur simultaneously for more than one tank.	0		
*TX-0855	BUCKEYE SOUTH TEXAS GATEWAY TERMINAL	03/13/2019 ACT	Loading during MSS via Vacuum Truck	0		Volatile Organic Compounds (VOC)	Carbon Absorption System	100	PPMV	BREAKTHROUGH
*TX-0855	BUCKEYE SOUTH TEXAS GATEWAY TERMINAL	03/13/2019 ACT	Storage Tanks MSS	0		Volatile Organic Compounds (VOC)	portable vapor combustion units	0		
*TX-0861	BUCKEYE TEXAS PROCESSING CORPUS CHRISTI FACILITY	08/29/2019 ACT	IFR ROOF LANDINGS (MSS)	0		Volatile Organic Compounds (VOC)	STEAM ASSISTED FLARE	0		
TX-0799	BEAUMONT TERMINAL	06/08/2016 ACT	Storage Tanks Floating Roof MSS	0		Volatile Organic Compounds (VOC)	Landing, degassing, and refilling events will be controlled by a portable VCU or thermal oxidizer meeting TCEQ BACT. Degassing will begin within 24 hours of roof landing. All new tanks have drain dry design	28.83	T/YR	
*TX-0855	BUCKEYE SOUTH TEXAS GATEWAY TERMINAL	03/13/2019 ACT	Loading during MSS via Vacuum Truck	0		Volatile Organic Compounds (VOC)	Carbon Absorption System	100	PPMV	BREAKTHROUGH
*TX-0855	BUCKEYE SOUTH TEXAS GATEWAY TERMINAL	03/13/2019 ACT	Storage Tanks MSS	0		Volatile Organic Compounds (VOC)	portable vapor combustion units	0		
LA-0228	BATON ROUGE JUNCTION FACILITY	11/02/2009 ACT	FUG003 TANK CLEANING (TC01)			Volatile Organic Compounds (VOC)	LIMIT TANK CLEANING TO 2 TIMES PER ANY 12 CONSECUTIVE MONTH PERIOD. MINIMIZE THE TIME BEFORE REMOVING LIQUID HEELS AND SLUDGE FROM THE TANK BOTTOM	16.07	T/YR	12 CONSECUTIVE MONTH TOTAL
*TX-0861	BUCKEYE TEXAS PROCESSING CORPUS CHRISTI FACILITY	08/29/2019 ACT	EFR ROOF LANDINGS (MSS)	0		Volatile Organic Compounds (VOC)	STEAM ASSISTED FLARE	0		
LA-0228	BATON ROUGE JUNCTION FACILITY	11/02/2009 ACT	EQT036 ROOF LANDINGS			Volatile Organic Compounds (VOC)	LIMIT ROOF LANDINGS TO 80 TIMES PER ANY 12 CONSECUTIVE MONTH PERIOD AND COMPLY WITH 40 CFR 60.112b(a)(1)(i)	55	T/YR	12 CONSECTIVE MONTH TOTAL
TX-0752	INGLESIDE TERMINAL	06/22/2015 ACT	Tank Roof Landings	130	MBBL/YR	Volatile Organic Compounds (VOC)	vapor combustor	4.21	T/YR	
*TX-0861	BUCKEYE TEXAS PROCESSING CORPUS CHRISTI FACILITY	08/29/2019 ACT	IFR ROOF LANDINGS (MSS)	0		Volatile Organic Compounds (VOC)	STEAM ASSISTED FLARE	0		
VA-0333	TRANSMONTAIGNE NORFOLK TERMINAL	04/22/2010 ACT	Storage Tank Breathing, Working, and Floating Roof Landing Losses (including emergency ro	0		Volatile Organic Compounds (VOC)	Floating Roof and Seal Systems meeting NSPS Kb, MACT 8BB 8BB requirements for Tanks in Gasoline Service	114.1	T/YR	
TX-0752	INGLESIDE TERMINAL	06/22/2015 ACT	Tank Roof Landings	130	MBBL/YR	Volatile Organic Compounds (VOC)	vapor combustor	4.21	T/YR	

Additional Impacts Analysis

1. PSD ADDITIONAL IMPACTS ANALYSIS

All PSD applications must include an Additional Impacts Analysis based on existing air quality, the quantity of proposed emissions for pollutants subject to PSD review, the sensitivity of local soils and vegetation, and the visibility in the impact area. The analysis is divided into four parts:

1. Growth analysis
2. Soils and vegetation analyses
3. Visibility impairment analysis
4. Class I area analysis

1.1. GROWTH ANALYSIS

The purpose of the growth analysis is to predict quantitatively the amount of new growth likely to occur to support the source or modification under review and to estimate the emissions that will result from the associated growth. First, an assessment is made regarding the amount of residential growth the modified source will bring to the area. This depends on the size of the available work force, the number of new employees, and the availability of housing in the area. Associated commercial and industrial growth consists of new sources providing goods and services to the new employees and to the modified source itself. Once these anticipated growth effects have been considered, an estimate of the air pollutant emissions that would likely result from the associated growth is made.

XTO expects that most of the employees of the proposed facility will be existing residents of nearby towns/counties; therefore, residential growth is expected to be minimal. Further, XTO does not anticipate any associated industrial or commercial growth as a result of the new facility. For these reasons, any air quality impact resulting from industrial, commercial, and residential growth in the local area due to the proposed project will be negligible.

1.2. SOIL AND VEGETATION ANALYSIS

The secondary NAAQS were established to protect certain air quality-related values that were not sufficiently protected by the primary NAAQS. The secondary NAAQS represent concentration levels below which no harmful effects to either soil or vegetation are expected.[1] As demonstrated in this application, the proposed project will have no adverse impact on the NAAQS. Thus, it can be concluded that any impact on soil and vegetation will be negligible.

1.3. VISIBILITY IMPAIRMENT ANALYSIS

This A Class II Visibility Analysis is required to determine impact the facility will have upon Class II areas. The NMED Modeling guideline states to analyze the change in visibility of a nearby peak or mountain for this analysis, or in the absence of nearby mountains, analyze the visibility of clear sky from nearby state or local

[1] U.S. EPA, Office of Air Quality Planning and Standards, *New Source Review Workshop Manual (Draft),* (U.S. EPA, Research Triangle Park, NC), October 1990.

parks. Through email correspondence, the NMED has indicated that the VISCREEN analysis for clears sky at the Living Desert Zoo & Gardens is acceptable to assess the visibility impairment in the Class II area.

This analysis follows the prescription in the U.S. EPA's *Workbook for Plume Visual Impact Screening and Analysis*[2] wherein three levels of screening procedures are outlined. If the criteria for the first (most conservative) screening level are met, no further analysis is required. The VISCREEN model is recommended for the first level (Level 1) screen. If calculated values from the VISCREEN model are greater than the standardized screening values, the emissions are judged to have the potential for visibility impairment. If the potential for visibility impairment is indicated, the next level analysis, Level 2 analysis, is required. The methods in this workbook are designed for Class I area impacts; however, the procedures are generally applicable to other areas and therefore are used in this analysis. The VISCREEN file is provided with the Class II modeling files on CD.

Results from a VISCREEN analysis are expressed in terms of perceptibility (ΔE) and contrast. The color contrast parameter, ΔE, is used as the primary basis for determining the perceptibility of plume visual impacts in screening analyses. ΔE provides a single measure of the difference between two arbitrary colors as perceived by humans. EPA guidance for plume visual impact screening suggests a critical value for ΔE of 2.0 for untrained observers under reasonable worst-case conditions. A green contrast value is also recorded because the human eye is most sensitive to intensity changes in green. The critical value for this contrast is 0.05.

The pollutant input used for the Level 1 analysis was 177tpy PM_{10} and 269.2 tpy NOx which represent the maximum daily emissions. The background visual range of 110 km was selected from Figure 9 of the Workbook for Plume Visual Impact Screening and Analysis. The distance to the Class II area was found to be 34.4 km and was used for the distance inputs in VISCREEN. The VISCREEN analysis for clear sky indicates that the perceptibility is below the screening value of 2.0 at 1.9 and the contrast is below the screening value of 0.05 at 0.031. The Level 1 VISCREEN results indicate no potential adverse visibility impact is projected for inside the Living Desert State Park.

In addition to the VISCREEN analysis, the Class II ambient impact modeling analysis indicates that visibility at the Living Desert Zoo & Gardens will not be impacted. The Class II impacts for the project were found to be below the secondary NAAQS. Secondary standards provide public welfare protection, including protection against decreased visibility and damage to animals, crops, vegetation, and buildings. Project ambient impacts were found to be below the modeling significance levels for the Cogen and non-Cogen scenarios, indicating that visibility in the Living Desert Zoo & Gardens would not be impaired.

1.3.1. Class Area I Analyses

One of the purposes of the PSD program is "to preserve, protect, and enhance the air quality in national parks, national wilderness areas, national monuments, national seashores, and other areas of special national or regional natural, recreational, scenic, or historic value." Under the PSD provisions, Congress established a land classification scheme for these areas of the country (Class I), specifically including:

1. International parks;
2. National wilderness areas which exceed 5,000 acres in size;
3. National memorial parks which exceed 5,000 acres in size; and
4. National parks which exceed 6,000 acres in size.

[2] U.S. EPA, *Workbook for Plume Visual Impact Screening and Analysis*, EPA-454/R-92-023, October 1992.

Class I area analyses, when necessary, typically include a Class I PSD Increment Assessment for NO_X, SO_2, and PM_{10}, and an Air Quality Related Values (AQRV) assessment including a visibility analysis for increases in visibility impairing pollutants and a deposition analysis for nitrogen and sulfur.

NMED requires Class I Area analyses for proposed PSD projects that are less than 100 km from a Class I Area. The Class I Areas nearest the proposed site are the Carlsbad Caverns National Park in southern New Mexico, Guadalupe Mountains National Park in western Texas, Salt Creek Wilderness Area in southeast New Mexico, and White Mountain Wilderness Area in central New Mexico. Two of the Class I Areas are within 100 km of the site: Carlsbad Caverns National Park, which is approximately 50.8 km from the site, and Guadalupe Mountains National Park, which is approximately 92.8 km from the site.

1.3.2. Class I Area AQRV Analysis

A threshold ratio of emissions to distance, below which AQRV review is not required for sources located greater than 50 km from a Class I area, was established in October 2010.[3] Specifically, if Q (tpy) / d (km) is less than 10, no AQRV analysis is required. Q is the combined emissions increase (based on 24-hour maximum emissions) of SO_2, NO_X, PM_{10}, and sulfuric acid mist (H_2SO_4) in tpy and d is the distance to the nearest Class I area in km.

For the proposed project, Q is 487.6 tpy[4] and d is 50.57 km; therefore, Q/d is 9.64. Thus, XTO assumes the requirement for assessing the impact to AQRVs is satisfied. Distance (d) was determined as the distance from the edge of the Husky CDP facility pad location (32°25'6"N, 103°54'25"W) to the boundary of each Class 1 Area. The combined emissions increase (Q) was determined in tons per year, based on 24-hour maximum allowable emissions. For all emission sources other than SSM flaring activities (SSM/Emergency Flare1 –SSM/Emergency Flare3) at the Husky CDP, the maximum hourly emissions for 24 hours per day were considered for Q. Each SSM flaring activity will be limited to two (2) hours per 24 hour period, and both categories of SSM flaring activities cannot occur within a 24 hour period.

1.3.3. Class I Increment Analysis

If the proposed construction of a PSD major source is within 100 km of a Class I area, then the NMED guideline requires an assessment of the PSD increment consumption at the Class I area. The Carlsbad Caverns and Guadalupe Mountains Class I areas are within 100 km of the Husky CDP site; however, these areas are outside the extent of the near field model. The Appendix W guideline provides a screening approach in which the ambient impacts at or about 50 km from the new or modifying source are evaluated to determine if significant impacts beyond 50 km are indicated. Receptors were placed at 50 km from the Husky CDP location in the direction of the Carlsbad Caverns and Guadalupe Mountain Class I areas. The impacts at this location were below the Class I significant impact levels and indicate that impacts beyond 50 km in the Class I areas will be below the Class I significant levels.

---

[3] U.S. Department of the Interior, *Federal Land Managers' Air Quality Related Values Work Group (FLAG) Phase I Report – Revised (2010)*, Natural Resource Report NPS/NRPC/NRR—2010/232, October 2010.

[4] Based on 24-hour maximum emissions of 250.8 tpy of NO_X, 47.4 tpy of SO_2, 175.0 tpy of PM_{10}, and 14.4 tpy of H_2SO_4.

Documentation of FLM Notification

Evan Tullos

From: Boor, Ethan <Ethan_Boor@xtoenergy.com>
Sent: Wednesday, October 23, 2019 5:38 PM
To: Shepherd, Don; Hardison, Cember, NMENV; Raso, Angela, NMENV; Nellessen, James, NMENV; Notar, John; Bret Anderson; Tim_Allen@fws.gov; Catherine Collins; d King; John Vimont; rjl226c@gmail.com
Cc: McMichael, John; OConnor, Mike; Christine Chambers; Rob Liles; Evan Tullos; Tullos, Evan /c; Bruce Ferguson; Klutz, Brian; Powell, Mark W; Tabije, Stephanie A
Subject: XTO Energy - Proposed Husky CDP Project
Attachments: XTO Energy - Husky CDP Project Summary.pdf

All –

Please see the attached Project Summary for XTO Energy's proposed Husky CDP facility. Please do not hesitate to contact me at my contact information listed below if you would like any additional information, or if you have any questions regarding the contents of the attached document and Prevention of Significant Deterioration (PSD) New Source Review (NSR) application to be submitted to the State of New Mexico Environmental Division (NMED).

We are happy to set up a conference call and/or face-to-face meeting to discuss the proposed project.

Thank you,

Ethan Boor
Environmental Engineer

XTO Energy Inc.
22777 Springwoods Village Parkway
Spring, TX 77389
832-625-0106 Tel
817- 247-1741 Mobile
ethan_boor@xtoenergy.com

Evan Tullos

From: Shepherd, Don <don_shepherd@nps.gov>
Sent: Wednesday, October 23, 2019 5:59 PM
To: Boor, Ethan
Cc: Hardison, Cember, NMENV; Raso, Angela, NMENV; Nellessen, James, NMENV; Notar, John; Bret Anderson; Tim_Allen@fws.gov; Catherine Collins; d King; John Vimont; rjl226c@gmail.com; McMichael, John; OConnor, Mike; Christine Chambers; Rob Liles; Evan Tullos; Tullos, Evan /c; Bruce Ferguson; Klutz, Brian; Powell, Mark W; Tabije, Stephanie A
Subject: Re: [EXTERNAL] XTO Energy - Proposed Husky CDP Project

Ethan--got it--thanks!

On Wed, Oct 23, 2019 at 4:39 PM Boor, Ethan <Ethan_Boor@xtoenergy.com> wrote:

> All –
>
> Please see the attached Project Summary for XTO Energy's proposed Husky CDP facility. Please do not hesitate to contact me at my contact information listed below if you would like any additional information, or if you have any questions regarding the contents of the attached document and Prevention of Significant Deterioration (PSD) New Source Review (NSR) application to be submitted to the State of New Mexico Environmental Division (NMED).
>
> We are happy to set up a conference call and/or face-to-face meeting to discuss the proposed project.
>
> Thank you,
>
> **Ethan Boor**
>
> Environmental Engineer
>
> **XTO Energy Inc.**
>
> 22777 Springwoods Village Parkway
>
> Spring, TX 77389
>
> 832-625-0106 Tel
>
> 817- 247-1741 Mobile

ethan_boor@xtoenergy.com

--
Don Shepherd
National Park Service
Air Resources Division
12795 W. Alameda Pkwy.
Lakewood, CO 80228
Phone: 303-969-2075
Fax: 303-969-2822
E-Mail: don_shepherd@nps.gov
"the man who really counts in the world is the doer, not the mere critic" TR 1891

Tab 13
Section 13 - Determination of State & Federal Air Quality Regulations

Section 13

Determination of State & Federal Air Quality Regulations

This section lists each state and federal air quality regulation that may apply to your facility and/or equipment that are stationary sources of regulated air pollutants.

Not all state and federal air quality regulations are included in this list. Go to the Code of Federal Regulations (CFR) or to the Air Quality Bureau's regulation page to see the full set of air quality regulations.

Required Information for Specific Equipment:
For regulations that apply to specific source types, in the 'Justification' column **provide any information needed to determine if the regulation does or does not apply**. **For example**, to determine if emissions standards at 40 CFR 60, Subpart IIII apply to your three identical stationary engines, we need to know the construction date as defined in that regulation; the manufacturer date; the date of reconstruction or modification, if any; if they are or are not fire pump engines; if they are or are not emergency engines as defined in that regulation; their site ratings; and the cylinder displacement.

Required Information for Regulations that Apply to the Entire Facility:
See instructions in the 'Justification' column for the information that is needed to determine if an 'Entire Facility' type of regulation applies (e.g. 20.2.70 or 20.2.73 NMAC).

Regulatory Citations for Regulations That Do Not, but Could Apply:
If there is a state or federal air quality regulation that does not apply, but you have a piece of equipment in a source category for which a regulation has been promulgated, you must **provide the low level regulatory citation showing why your piece of equipment is not subject to or exempt from the regulation. For example** if you have a stationary internal combustion engine that is not subject to 40 CFR 63, Subpart ZZZZ because it is an existing 2 stroke lean burn stationary RICE with a site rating of more than 500 brake HP located at a major source of HAP emissions, your citation would be 40 CFR 63.6590(b)(3)(i). **We don't want a discussion of every non-applicable regulation, but if it is possible a regulation could apply, explain why it does not. For example,** if your facility is a power plant, you do not need to include a citation to show that 40 CFR 60, Subpart OOO does not apply to your non-existent rock crusher.

Regulatory Citations for Emission Standards:
For each unit that is subject to an emission standard in a source specific regulation, such as 40 CFR 60, Subpart OOO or 40 CFR 63, Subpart HH, include the low level regulatory citation of that emission standard. Emission standards can be numerical emission limits, work practice standards, or other requirements such as maintenance. **Here are examples:** a glycol dehydrator is subject to the general standards at 63.764C(1)(i) through (iii); an engine is subject to 63.6601, Tables 2a and 2b; a crusher is subject to 60.672(b), Table 3 and all transfer points are subject to 60.672(e)(1)

Federally Enforceable Conditions:
All federal regulations are federally enforceable. All Air Quality Bureau State regulations are federally enforceable except for the following: affirmative defense portions at 20.2.7.6.B, 20.2.7.110(B)(15), 20.2.7.11 through 20.2.7.113, 20.2.7.115, and 20.2.7.116; 20.2.37; 20.2.42; 20.2.43; 20.2.62; 20.2.63; 20.2.86; 20.2.89; and 20.2.90 NMAC. Federally enforceable means that EPA can enforce the regulation as well as the Air Quality Bureau and federally enforceable regulations can count toward determining a facility's potential to emit (PTE) for the Title V, PSD, and nonattainment permit regulations.

INCLUDE ANY OTHER INFORMATION NEEDED TO COMPLETE AN APPLICABILITY DETERMINATION OR THAT IS RELEVENT TO YOUR FACILITY'S NOTICE OF INTENT OR PERMIT.

EPA Applicability Determination Index for 40 CFR 60, 61, 63, etc: http://cfpub.epa.gov/adi/

STATE REGU-LATIONS CITATION	**Title**	**Applies? Enter Yes or No**	**Unit(s) or Facility**	**JUSTIFICATION:** **(You may delete instructions or statements that do not apply in the justification column to shorten the document.)**
20.2.1 NMAC	General Provisions	Yes	Facility	General Provisions apply to Notice of Intent, Construction, and Title V permit applications.
20.2.3 NMAC	Ambient Air Quality Standards NMAAQS	Yes	Facility	20.2.3 NMAC is a SIP approved regulation that limits the maximum allowable concentration of Total Suspended Particulates, Sulfur Compounds, Carbon Monoxide and Nitrogen Dioxide.
20.2.7 NMAC	Excess Emissions	Yes	Facility	
20.2.23 NMAC	Fugitive Dust Control	No	N/A	**20.2.23.108 APPLICABILITY:** **B.** The following fugitive dust sources are exempt from this part: **(3)** operations issued permits pursuant to the state of New Mexico Air Quality Control Act, Mining Act or Surface Mining Act; a
20.2.33 NMAC	Gas Burning Equipment - Nitrogen Dioxide	No	N/A	None of the equipment has a heat input greater than 1,000,000 million British Thermal Units per year per unit
20.2.34 NMAC	Oil Burning Equipment: NO_2	No	N/A	None of the equipment burns oil.
20.2.35 NMAC	Natural Gas Processing Plant – Sulfur	No	N/A	This regulation is not applicable because sulfur emissions from the plant are below the applicability thresholds established in the regulation.
20.2.37 and 20.2.36 NMAC	Petroleum Processing and Petroleum Refineries	N/A	N/A	These regulations were repealed as of 9/12/2016.
20.2.38 NMAC	Hydrocarbon Storage Facility	Yes	IFR1-4, OTK1-7	The tanks are subject to 109 and 112 due to throughput and storage capacity. Flares are used to comply. IFR1-IFR4 are each equipped with a floating roof while OTK1-OTK7 are controlled using a combustor.
20.2.39 NMAC	Sulfur Recovery Plant - Sulfur	No	N/A	This is not an affected facility.
20.2.61.109 NMAC	Smoke & Visible Emissions	Yes	SHTR1-12, CHTR1-3, RHTR1-3, FL1-3, ECD1, TO1-3, TUR1-4, GEN1-8	Engines, heaters, and turbines are Stationary Combustion Equipment
20.2.70 NMAC	Operating Permits	Yes	Facility	This site will be a Part 70 source.
20.2.71 NMAC	Operating Permit Fees	Yes	Facility	This site will be a Part 70 source.
20.2.72 NMAC	Construction Permits	Yes	Facility	This permit application requests a Part 72 permit.
20.2.73 NMAC	NOI & Emissions Inventory Requirements	Yes	Facility	The site is subject to inventory reporting.
20.2.74 NMAC	Permits – Prevention of Significant Deterioration (PSD)	Yes	Facility	Under both construction scenarios, this facility is a major PSD source since the potential to emit exceeds 100 tons per year (Petroleum storage and transfer units with a total storage capacity exceeding 300,000 barrels or Fossil fuel fired boilers totaling more than 250 MMBtu/hr).

STATE REGU-LATIONS CITATION	**Title**	**Applies? Enter Yes or No**	**Unit(s) or Facility**	**JUSTIFICATION:** **(You may delete instructions or statements that do not apply in the justification column to shorten the document.)**
20.2.75 NMAC	Construction Permit Fees	Yes	Facility	A permit fee will be paid.
20.2.77 NMAC	New Source Performance	Yes	Units subject to 40 CFR 60	This is a stationary source subject to the requirements of 40 CFR Part 60.
20.2.78 NMAC	Emission Standards for HAPS	No	N/A	There are no affected sources.
20.2.79 NMAC	Permits – Nonattainment Areas	No	N/A	The site is not located in a nonattainment area.
20.2.80 NMAC	Stack Heights	No	N/A	This regulation establishes requirements for the evaluation of stack heights and other dispersion techniques. This regulation does not apply as all stacks at the facility follow good engineering practice.
20.2.82 NMAC	MACT Standards for source categories of HAPS	Yes	Units Subject to 40 CFR 63	This is a stationary source subject to the requirements of 40 CFR Part 63.

FEDERAL REGU-LATIONS CITATION	**Title**	**Applies? Enter Yes or No**	**Unit(s) or Facility**	**JUSTIFICATION:**
40 CFR 50	NAAQS	Yes	Facility	This regulation defines national ambient air quality standards. The facility meets all applicable national ambient air quality standards for NOx, CO, SO_2, H_2S, PM_{10}, and $PM_{2.5}$ under this regulation.
NSPS 40 CFR 60, Subpart A	General Provisions	Yes	Units subject to 40 CFR 60	See discussion of 40 CFR 60 Subparts below.
NSPS 40 CFR60.40a, Subpart Da	Subpart Da, Performance Standards for **Electric Utility Steam Units**	No	N/A	Emissions from the HRSG duct burners are subject to 40 CFR 60 Subpart KKKK and therefore are exempt from the requirements of Subpart Da.
NSPS 40 CFR60.40b Subpart Db	**Electric Utility Steam Generating Units**	Yes	CHTR1-3	CHTR1-CHTR3 have an input rating greater than 100 MMBtu/hr and are subject per §60.40b(a). They are exempt from SO2 standards per §60.40b(k)(2). The heater emission rate of 0.0334 lb/MMBtu meets the 60.44b(a) standard for 0.1 lb/MMBtu. There are no PM standards for units burning natural gas. Emissions from the HRSG duct burners are subject to 40 CFR 60 Subpart KKKK and therefore are exempt from the requirements of Subpart Db.
40 CFR 60.40c, Subpart Dc	Standards of Performance for Small Industrial-Commercial-Institutional Steam Generating Units	Yes	SHTR1-12, RHTR1-3	The heaters have an input rating greater than 10 MMBtu/hr and are subject per §60.40c(a). Since the units burn only natural gas, there are no applicable control, monitoring, or reporting requirements. Fuel use records are required per §60.48c(g).

FEDERAL REGU-LATIONS CITATION	Title	Applies? Enter Yes or No	Unit(s) or Facility	JUSTIFICATION:
NSPS 40 CFR 60, Subpart Ka	**Petroleum Liquids** After May 18, 1978, and **Prior** to July 23, 1984	No	N/A	The hydrocarbons are stored prior to custody transfer.
NSPS 40 CFR 60, Subpart Kb	Standards of Performance for Volatile Organic Liquid Storage Vessels After July 23, 1984	Yes	IFR1-IFR4	The hydrocarbons are stored prior to custody transfer but the storage volume is equal to 1,589,875 m3 so the exemption in §60.110b(d) no longer applies. The tanks use internal floating roof tanks to comply with the control requirements.
NSPS 40 CFR 60.330 Subpart GG	Stationary Gas Turbines	No	N/A	The turbines are subject to NSPS KKKK and are exempt from NSPS GG per §60.4305(b).
NSPS 40 CFR 60, Subpart KKK	Leaks of VOC from Onshore Gas Plants	No	N/A	The site will be constructed after 8/23/2011.
NSPS 40 CFR Part 60 Subpart LLL	Standards of Performance for Onshore Natural Gas Processing: SO_2 Emissions	No	N/A	The site will be constructed after 8/23/2011.
NSPS 40 CFR 60, Subparts WWW, XXX, Cc, and Cf	Standards of performance for Municipal Solid Waste (MSW) Landfills	No	N/A	This is not a MSW landfill.
NSPS 40 CFR 60, Subpart KKKK	Stationary Gas Turbines	Yes	TUR1-TUR4	TUR1-TUR4 are stationary combustion turbines with a heat input at peak load greater than 10 MMBtu/hr (HHV) and commenced construction after February 18, 2005. The units are subject to NSPS KKKK per §60.4305(a). The HRSG duct burners are also subject to the provisions of NSPS KKKK.
NSPS 40 CFR Part 60 Subpart OOOO	Oil and Natural Gas after August 23, 2011 and before September 18, 2015	No	N/A	The site will be constructed after 9/18/15. See NSPS OOOOa discussion below.
NSPS 40 CFR Part 60 Subpart OOOOa	Oil and Natural Gas After September 18, 2015	Yes	FUG, ESTCO MP1-17, EIACO MP1-5	The electric drive centrifugal compressors for residue gas and regen gas are exempt from §60.5365a(b) since they all use dry seals. The electric drive screw compressors for the refrigeration gas are exempt from the definition of centrifugal compressor per §60.5430a. The reciprocating compressors used for stabilization gas and instrument air are subject to rule per from §60.5365a(c). The storage tanks were constructed after the applicability date of the rule; however, since emissions will be limited by permit to less than 6 tpy, the tanks are exempt per §60.5365a(e). The site uses compressed air for pneumatic controllers. The site will be subject to leak monitoring from fugitive components per §60.5365a(f). Since the sweetening units process less than 2 lt/d of sulfur, they are exempt for §60.5365a(g).
NSPS 40 CFR 60 Subpart IIII	Stationary Compression Ignition Engines	No	N/A	The facility does not operate any affected sources.
NSPS 40 CFR Part 60 Subpart JJJJ	Stationary Spark Ignition Internal Combustion Engines	No	N/A	The facility does not operate any affected sources.
NSPS 40 CFR 60 Subpart TTTT	Greenhouse Gas Emissions for Electric Generating Units	No	N/A	The turbines are exempt since they meet only one of the applicability criteria of §60.5509(a). Power will not be sold to a utility distribution system.

FEDERAL REGU-LATIONS CITATION	Title	Applies? Enter Yes or No	Unit(s) or Facility	JUSTIFICATION:
NSPS 40 CFR 60 Subpart UUUU	GHG Emissions and Compliance Times for EGUs	No	N/A	Per §60.5710a, this subpart applies to Governors of States with one or more designated facilities.
NESHAP 40 CFR 61 Subpart A	General Provisions	No	N/A	There are no affected sources.
NESHAP 40 CFR 61 Subpart E	National Emission Standards for **Mercury**	No	N/A	This facility does not process mercury ore to recover mercury, use mercury chlor-alkali cells to produce chlorine gas and alkali metal hydroxide, and incinerate or dry wastewater treatment plant sludge.
NESHAP 40 CFR 61 Subpart V	National Emission Standards for **Equipment Leaks**	No	N/A	The facility does not have equipment that operates in volatile hazardous air pollutant (VHAP) service [40 CFR Part 61.240].
MACT 40 CFR 63, Subpart A	General Provisions	Yes	Units Subject to 40 CFR 63	See discussion of 40 CFR 63 Subparts below.
MACT 40 CFR 63.760 Subpart HH	Oil and Natural Gas Production Facilities	No	N/A	As a major source of HAP, sources potentially subject to HH include storage vessels with flash emissions, fugitive components, and compressors in VHAP service ((see §63.760(b)(1)(ii), (iii), and (iv)). Fugitives and compressors are exempt per §63.769(b) since they are subject to NSPS OOOO. Storage vessels use a closed vent system connected to a combustor to comply with §63.766(b).
MACT 40 CFR 63 Subpart HHH	Natural Gas Transmission and Storage Facilities	No	N/A	This regulation does not apply as the plant is not a natural gas transmission and storage facility as defined by the subpart (§63.1270(a)).
40 CFR 63 Subpart DDDDD	Boilers & Process Heaters	No	N/A	Per §63.7500(e), boilers and heaters designed to burn gas 1 fuels must comply with work practice standards and does not have emission or operating limits.
MACT 40 CFR 63 Subpart UUUUU	Coal & Oil Fire Electric Utility Steam Generating Unit	No	N/A	There are no affected sources.
MACT 40 CFR 63 Subpart YYYY	Turbine MACT	No	N/A	The turbines are subject to Subpart YYYY rule per §63.6085. Formaldehyde emissions are less than 0.91 ppb
MACT 40 CFR 63 Subpart ZZZZ	RICE MACT	No	N/A	There are no affected sources.
MACT 40 CFR 63 Subpart JJJJJJ	Boilers and Process Heaters	No	N/A	The units are exempt per §63.1195(e) since they burn natural gas.
40 CFR 64	CAM	No	N/A	Any equipment with uncontrolled emission rates greater than major source thresholds are subject to NSPS/MACT promulgated after 1990.
40 CFR 68	Accident Prevention	No	N/A	The facility will not store more than the regulated quantity of regulated substances.
Acid Rain 40 CFR 72	Acid Rain	No	N/A	The facility does not generate commercial electric power.
Acid Rain 40 CFR 73	Sulfur Dioxide Allowance	No	N/A	The facility does not generate commercial electric power.
Acid Rain 40 CFR 75	CEMS	No	N/A	The facility does not generate commercial electric power
Acid Rain 40 CFR 76	Acid Rain	No	N/A	The facility does not generate commercial electric power.
Title VI – 40 CFR 82	Protection of Stratospheric Ozone	No	N/A	The regulation is not applicable per §40 CFR Part 82.1(a) because the facility does not service, maintain or repair class I or class II appliances.

Tab 14
Section 14 - Operational Plan to Mitigate Emissions

Section 14

Operational Plan to Mitigate Emissions

(Submitting under 20.2.70, 20.2.72, 20.2.74 NMAC)

☑ **Title V Sources** (20.2.70 NMAC)**:** By checking this box and certifying this application the permittee certifies that it has developed an **Operational Plan to Mitigate Emissions During Startups, Shutdowns, and Emergencies** defining the measures to be taken to mitigate source emissions during startups, shutdowns, and emergencies as required by 20.2.70.300.D.5(f) and (g) NMAC. This plan shall be kept on site to be made available to the Department upon request. This plan should not be submitted with this application.

☑ **NSR** (20.2.72 NMAC)**, PSD** (20.2.74 NMAC) **& Nonattainment** (20.2.79 NMAC) **Sources:** By checking this box and certifying this application the permittee certifies that it has developed an **Operational Plan to Mitigate Source Emissions During Malfunction, Startup, or Shutdown** defining the measures to be taken to mitigate source emissions during malfunction, startup, or shutdown as required by 20.2.72.203.A.5 NMAC. This plan shall be kept on site to be made available to the Department upon request. This plan should not be submitted with this application.

☑ **Title V** (20.2.70 NMAC)**, NSR** (20.2.72 NMAC)**, PSD** (20.2.74 NMAC) **& Nonattainment** (20.2.79 NMAC) **Sources:** By checking this box and certifying this application the permittee certifies that it has established and implemented a Plan to Minimize Emissions During Routine or Predictable Startup, Shutdown, and Scheduled Maintenance through work practice standards and good air pollution control practices as required by 20.2.7.14.A and B NMAC. This plan shall be kept on site or at the nearest field office to be made available to the Department upon request. This plan should not be submitted with this application.

XTO Energy maintains written procedures to mitigate emissions during startups, shutdowns, and emergencies. In the event of a malfunction, startup, shutdown, or scheduled maintenance in which emission rates from the facility exceed permitted allowable emission rates, XTO Energy will notify the AQB in accordance with 20.2.7 NMAC and the equipment responsible for the exceedance will be repaired as soon as possible.

Tab 15
Section 15 - Alternative Operating Scenarios

Section 15

Alternative Operating Scenarios

(Submitting under 20.2.70, 20.2.72, 20.2.74 NMAC)

Alternative Operating Scenarios: Provide all information required by the department to define alternative operating scenarios. This includes process, material and product changes; facility emissions information; air pollution control equipment requirements; any applicable requirements; monitoring, recordkeeping, and reporting requirements; and compliance certification requirements. Please ensure applicable Tables in this application are clearly marked to show alternative operating scenario.

Construction Scenarios: When a permit is modified authorizing new construction to an existing facility, NMED includes a condition to clearly address which permit condition(s) (from the previous permit and the new permit) govern during the interval between the date of issuance of the modification permit and the completion of construction of the modification(s). There are many possible variables that need to be addressed such as: Is simultaneous operation of the old and new units permitted and, if so for example, for how long and under what restraints? In general, these types of requirements will be addressed in Section A100 of the permit, but additional requirements may be added elsewhere. Look in A100 of our NSR and/or TV permit template for sample language dealing with these requirements. Find these permit templates at: https://www.env.nm.gov/aqb/permit/aqb_pol.html. Compliance with standards must be maintained during construction, which should not usually be a problem unless simultaneous operation of old and new equipment is requested.

In this section, under the bolded title "Construction Scenarios", specify any information necessary to write these conditions, such as: conservative-realistic estimated time for completion of construction of the various units, whether simultaneous operation of old and new units is being requested (and, if so, modeled), whether the old units will be removed or decommissioned, any PSD ramifications, any temporary limits requested during phased construction, whether any increase in emissions is being requested as SSM emissions or will instead be handled as a separate Construction Scenario (with corresponding emission limits and conditions, etc.

OPERATING SCENARIOS

XTO Energy intends to construct and operate the Husky Central Delivery Point facility consisting to the gas, NGL, and oil/produced water processing systems prior to construction of the four cogeneration turbines. If the turbines are constructed at a later date, the heat recovery steam generators will provide the heat previously provided by the stabilizer and cryo heaters. The amine regen heaters will operate continuously for Husky CDP, independent of heat provided by COGEN. During scenarios in which the one or more turbines are down, stabilizer and cryo heaters would be needed to make up for heat lost from the turbine. The table below denotes the number of heaters that could be used when for each turbine that is down. As illustrated in the table, the highest emission rates occur when all of the turbines are operating, during which time two stabilizer heaters would be operating. To ensure compliance with National Ambient Air Quality Standards (NAAQS), the site was modeled as if all of the equipment was operating at the same time.

To ensure compliance with the proposed operating scenarios, XTO will ensure only the maximum number of heaters represented in Table 1 below will be operated for each turbine downtime scenario. XTO is proposing to track runtime hours for individual heaters and turbines.

TABLE 1

SUMMARY OF SITE EMISSIONS WITH VARIABLE HEAT NEEDS DURING TURBINE DOWNTIME

# OF COGENERATION UNITS	# OF STABILIZER HEATERS	# OF CRYO HEATERS	NOx		CO		VOC (INCLUDES HAPs)		SO_2		TSP		$PM_{10\ \&\ 2.5}$		HAPs		CO2e
			lb/hr	TPY	lb/hr	TPY	lb/hr	TPY	lb/hr	TPY	lb/hr	TPY	lb/hr	TPY	lb/hr	TPY	TPY
4	2	0	154.5	259.9	243.7	234.7	489.0	489.2	11.7	51.2	47.6	183.6	45.6	177.0	22.2	25.3	2,640,840
3	4	1	153.0	253.4	242.4	229.0	444.9	455.3	10.1	44.1	37.4	150.9	37.4	144.3	19.9	24.7	2,216,015
2	6	2	151.5	247.0	241.1	223.4	437.2	421.6	8.5	37.0	29.9	118.2	29.9	111.7	19.8	24.1	1,791,818
1	8	3	150.1	240.6	239.8	217.7	465.9	388.0	6.9	29.9	22.5	85.6	22.5	79.0	21.5	23.4	1,366,952
0	12	3	148.6	234.1	239.0	213.9	458.4	354.9	5.3	23.0	18.0	53.7	15.9	47.1	21.7	23.0	955,965

Tab 16
Section 16 - Air Dispersion Modeling

Section 16

Air Dispersion Modeling

1) Minor Source Construction (20.2.72 NMAC) and Prevention of Significant Deterioration (PSD) (20.2.74 NMAC) ambient impact analysis (modeling): Provide an ambient impact analysis as required at 20.2.72.203.A(4) and/or 20.2.74.303 NMAC and as outlined in the Air Quality Bureau's Dispersion Modeling Guidelines found on the Planning Section's modeling website. If air dispersion modeling has been waived for one or more pollutants, attach the AQB Modeling Section modeling waiver approval documentation.
2) SSM Modeling: Applicants must conduct dispersion modeling for the total short term emissions during routine or predictable startup, shutdown, or maintenance (SSM) using realistic worst case scenarios following guidance from the Air Quality Bureau's dispersion modeling section. Refer to "Guidance for Submittal of Startup, Shutdown, Maintenance Emissions in Permit Applications (http://www.env.nm.gov/aqb/permit/app_form.html) for more detailed instructions on SSM emissions modeling requirements.
3) Title V (20.2.70 NMAC) ambient impact analysis: Title V applications must specify the construction permit and/or Title V Permit number(s) for which air quality dispersion modeling was last approved. Facilities that have only a Title V permit, such as landfills and air curtain incinerators, are subject to the same modeling required for preconstruction permits required by 20.2.72 and 20.2.74 NMAC.

What is the purpose of this application?	Enter an X for each purpose that applies
New PSD major source or PSD major modification (20.2.74 NMAC). See #1 above.	X
New Minor Source or significant permit revision under 20.2.72 NMAC (20.2.72.219.D NMAC). See #1 above. **Note:** Neither modeling nor a modeling waiver is required for VOC emissions.	
Reporting existing pollutants that were not previously reported.	X
Reporting existing pollutants where the ambient impact is being addressed for the first time.	
Title V application (new, renewal, significant, or minor modification. 20.2.70 NMAC). See #3 above.	
Relocation (20.2.72.202.B.4 or 72.202.D.3.c NMAC)	
Minor Source Technical Permit Revision 20.2.72.219.B.1.d.vi NMAC for like-kind unit replacements.	
Other: i.e. SSM modeling. See #2 above.	X
This application does not require modeling since this is a No Permit Required (NPR) application.	
This application does not require modeling since this is a Notice of Intent (NOI) application (20.2.73 NMAC).	
This application does not require modeling according to 20.2.70.7.E(11), 20.2.72.203.A(4), 20.2.74.303, 20.2.79.109.D NMAC and in accordance with the Air Quality Bureau's Modeling Guidelines.	

Check each box that applies:

☐ See attached, approved modeling **waiver for all** pollutants from the facility.
☐ See attached, approved modeling **waiver for some** pollutants from the facility.
☑ Attached in Universal Application Form 4 (UA4) is a **modeling report for all** pollutants from the facility.
☐ Attached in UA4 is a **modeling report for some** pollutants from the facility.
☐ No modeling is required.

Tab 17
Section 17 - Compliance Test History

Section 17

Compliance Test History

(Submitting under 20.2.70, 20.2.72, 20.2.74 NMAC)

To show compliance with existing NSR permits conditions, you must submit a compliance test history. The table below provides an example.

This is a proposed facility. There is no history of compliance testing.

Tab 18
Section 18 - Addendum for Streamline Applications (Not Applicable)

Section 18

Addendum for Streamline Applications

Do not print this section unless this is a streamline application.

Streamline Applications do not require a complete application. Submit Sections 1-A, 1-B, 1-D, 1-F, 1-G, 2-A, 2-C thru L, Sections 3 thru 8, Section 13, Section 18, Section 22, and Section 23 (Certification). Other sections may be required at the discretion of the Department. 20.2.72.202 NMAC Exemptions do not apply to Streamline sources. 20.2.72.219 NMAC revisions and modifications do not apply to Streamline sources, thus 20.2.72.219 type actions require a complete new application submittal. Please do not print sections of a streamline application that are not required.

This section is not applicable since this is not a Streamline Permit Application.

Tab 19
Section 19 - Requirements for Title V Program

Section 19

Requirements for Title V Program

Do not print this section unless this is a Title V application.

Who Must Use this Attachment:

* Any major source as defined in 20.2.70 NMAC.
* Any source, including an area source, subject to a standard or other requirement promulgated under Section 111 - Standards of Performance for New Stationary Sources, or Section 112 Hazardous Air Pollutants, of the 1990 federal Clean Air Act ("federal Act"). Non-major sources subject to Sections 111 or 112 of the federal Act are exempt from the obligation to obtain an 20.2.70 NMAC operating permit until such time that the EPA Administrator completes rulemakings that require such sources to obtain operating permits. In addition, sources that would be required to obtain an operating permit solely because they are subject to regulations or requirements under Section 112(r) of the federal Act are exempt from the requirement to obtain an Operating Permit.
* Any Acid Rain source as defined under title IV of the federal Act. The Acid Rain program has additional forms. See http://www.env.nm.gov/aqb/index.html. Sources that are subject to both the Title V and Acid Rain regulations are encouraged to submit both applications simultaneously.
* Any source in a source category designated by the EPA Administrator ("Administrator"), in whole or in part, by regulation, after notice and comment.

This is not a Title V application.

Tab 20
Section 20 - Other Relevant Information

Section 20

Other Relevant Information

Other relevant information. Use this attachment to clarify any part in the application that you think needs explaining. Reference the section, table, column, and/or field. Include any additional text, tables, calculations or clarifying information.

Additionally, the applicant may propose specific permit language for AQB consideration. In the case of a revision to an existing permit, the applicant should provide the old language and the new language in track changes format to highlight the proposed changes. If proposing language for a new facility or language for a new unit, submit the proposed operating condition(s), along with the associated monitoring, recordkeeping, and reporting conditions. In either case, please limit the proposed language to the affected portion of the permit.

To save paper and to standardize the application format, delete this sentence, and begin your submittal for this attachment on this page.

Tab 21
Section 21 - Addendum for Landfill Applications (Not Applicable)

Section 21

Addendum for Landfill Applications

Do not print this section unless this is a landfill application.

Landfill Applications are not required to complete Sections 1-C Input Capacity and Production Rate, 1-E Operating Schedule, 17 Compliance Test History, and 18 Streamline Applications. Section 12 – PSD Applicability is required only for Landfills with Gas Collection and Control Systems and/or landfills with other non-fugitive stationary sources of air emissions such as engines, turbines, boilers, heaters. All other Sections of the Universal Application Form are required.

EPA Background Information for MSW Landfill Air Quality Regulations:
https://www3.epa.gov/airtoxics/landfill/landflpg.html

NM Solid Waste Bureau Website: https://www.env.nm.gov/swb/

Tab 22
Section 22 - Certification

Section 22: Certification

Company Name: XTO Energy Inc.

I, Carman Mullins, hereby certify that the information and data submitted in this application are true and as accurate as possible, to the best of my knowledge and professional expertise and experience.

Signed this ____ day of October, 2019, upon my oath or affirmation, before a notary of the State of Texas.

_____ _____
*Signature Date

Carman Mullins General Manager – Permian Business Unit
Printed Name Title

Scribed and sworn before me on this ____ day of October, 2019.

My authorization as a notary of the State of Texas expires on the ____ day of _____, _____.

_____ _____
Notary's Signature Date

_____
Notary's Printed Name

*For Title V applications, the signature must be of the Responsible Official as defined in 20.2.70.7.AE NMAC.

Tab 23
Section 23 - UA4

Universal Application 4

Air Dispersion Modeling Report

Refer to and complete Section 16 of the Universal Application form (UA3) to assist your determination as to whether modeling is required. If, after filling out Section 16, you are still unsure if modeling is required, e-mail the completed Section 16 to the AQB Modeling Manager for assistance in making this determination. If modeling is required, a modeling protocol would be submitted and approved prior to an application submittal. The protocol should be emailed to the modeling manager. A protocol is recommended but optional for minor sources and is required for new PSD sources or PSD major modifications. Fill out and submit this portion of the Universal Application form (UA4), the "Air Dispersion Modeling Report", only if air dispersion modeling is required for this application submittal. This serves as your modeling report submittal and should contain all the information needed to describe the modeling. No other modeling report or modeling protocol should be submitted with this permit application.

16-A: Identification	
1	Name of facility: Husky CDP (AI # 38899)
2	Name of company: XTO Energy Inc.
3	Current Permit number: N/A
4	Name of applicant's modeler: Bruce Ferguson
5	Phone number of modeler: (601) 824-1860
6	E-mail of modeler: bferguson@fce-engineering.com

16-B: Brief	
1	Why is the modeling being done? Adding new equipment
2	Describe the permit changes relevant to the modeling. The facility is proposing to a natural gas processing and oil/natural gas liquid (NGL) central delivery point (CDP). Process equipment at this facility consists of the following point source emissions: natural gas fired turbines, stabilization heaters, cryogenic heaters, amine regenerator heaters, thermal oxidizers, combustors, emergency flares and emergency generators. Facility tank sources will include: internal floating roof oil tanks, fixed roof oil tanks, fixed roof produced water tanks, a gun barrel tank, a slop oil tank, and loading operations.
3	What geodetic datum was used in the modeling? NAD83
4	How long will the facility be at this location? Indefinite

16-B: Brief

5	Is the facility a major source with respect to Prevention of Significant Deterioration (PSD)?	Yes X	No
6	Identify the Air Quality Control Region (AQCR) in which the facility is located. 155 – Pecos-Permian Basin		
7	List the PSD baseline dates for this region (minor or major, as appropriate).		

Pollutant	Major Source Baseline Date
NO_2	February 8, 1988
SO_2	January 6, 1975
PM_{10}	January 6, 1975
$PM_{2.5}$	October 20, 2010

8	Provide the name and distance to Class I areas within 50 km of the facility (300 km for PSD permits). Carlsbad Caverns 51 km Guadalupe Mountains 93 km Salt Creek Wilderness 136 km White Mountains 201 km
9	Is the facility located in a non-attainment area? If so, describe. No.
10	Describe any special modeling requirements, such as streamline permit requirements. None

16-C: Modeling History of Facility

1 Describe the modeling history of the facility, including the air permit numbers, the pollutants modeled, the National Ambient Air Quality Standards (NAAQS), New Mexico AAQS (NMAAQS), and PSD increments modeled. (Do not include modeling waivers).

Pollutant	Latest permit and modification number that modeled the pollutant facility-wide.	Date of Permit	Comments
CO			
NO_2			
SO_2			
H_2S			
PM2.5			
PM10			
~~TSP~~[1]			
Lead			
Ozone (PSD only)			
NM Toxic Air Pollutants (20.2.72.402 NMAC)			

1. The New Mexico Ambient Air Quality Standard for TSP was repealed by the Environmental Improvement Board effective November 30, 2018.

16-D: Modeling performed for this application

1 For each pollutant, indicate the modeling performed and submitted with this application.
Choose the most complicated modeling applicable for that pollutant, i.e., culpability analysis assumes ROI and cumulative analysis were also performed.

	Pollutant	ROI	Cumulative analysis	Culpability analysis	Waiver approved	Pollutant not emitted or not changed.
	CO	X				
	NO_2	X	X*			
	SO_2	X	X			
	H_2S					X
	$PM_{2.5}$	X	X			
	PM_{10}	X	X			
	Lead					X
	Ozone	X**				
	State air toxic(s) (20.2.72.402 NMAC)	X***				

*Cumulative analysis of NO_2 consisted of the significant impact analysis with monitored background added to the SIA results.
** Significance for ozone formation was analyzed using a MERPs Tier 1 Demonstration.
*** Emission rates of ammonia and sulfuric acid mist are below thresholds requiring modeling when the stack height correction factor is applied.

16-E: New Mexico toxic air pollutants modeling

1 List any New Mexico toxic air pollutants (NMTAPs) from Tables A and B in 20.2.72.502 NMAC that are modeled for this application.

List any NMTAPs that are emitted but not modeled because stack height correction factor. Add additional rows to the table below, if required.

Pollutant	Emission Rate (pounds/hour)	Emission Rate Screening Level (pounds/hour)	Stack Height (meters)	Correction Factor	Emission Rate/ Correction Factor
H_2SO_4	3.29	0.0667	45.72	71	0.0463
NH_4	63.44	1.2	45.72	71	0.8935

16-F: Modeling options

1 What model(s) were used for the modeling? Why?

The EPA preferred regulatory model AERMOD Version 19191 was used to conduct the modeling. The modeling was executed using the Lakes Environmental AERMOD View parallel processor.

AERMOD is the preferred model for near field impacts.

2 What model options were used and why were they considered appropriate to the application?
The model was executed using the DEFAULT control option to ensure that the regulatory default options were employed.

16-G: Surrounding source modeling

1	If the surrounding source inventory provided by the Air Quality Bureau was believed to be inaccurate, describe how the sources modeled differ from the inventory provided. If changes to the surrounding source inventory were made, use the unmerged list of sources to describe the changes. The surrounding source inventory was used for PM_{10}, $PM_{2.5}$, and SO_2 modeling. The surrounding source Aermod input files provided by the NMED were used. The SO_2 files were run as provided. For the PM_{10}/$PM_{2.5}$ runs all sources within 10 km of the Husky CDP site were included in the modeling. Sources between 10 and 25 km from the Husky CDP site were included in the model if the model ID for the source was 10,000 or greater. No sources greater than 25 km with emission rates greater than 1,000 lb/hr were identified, therefore, no sources greater than 25 km from the Husky CDP site were included in the model.
2	Date of surrounding source retrieval. October 10, 2019, email from Eric Peters October 11, 2019, email from Angela Raso (SO_2 files)

	AQB Source ID	Description of Corrections
	37951E1	Substituted an effective diameter of 13.2 meters for the flare based on calculation. PM emissions were changed from 9.51 lb/hr to 19.13 lb/hr to match the application.
	37951E2	The PM emissions were changed from 0.08 lb/hr to 0.19 lb/hr to reflect the emissions in the application.
	37951E24	This duplicated source was removed.
	37951E26	This duplicated source was removed.
	38041E7	Substituted an effective diameter of 13.2 meters for the flare based on calculation
	196	The file provided by Eric Peters on 12/14/2018 (Case2 Imported_2015_PM-2.5.dta) was used to determine the location of the sources for the Mosaic Sources in the NMED inventory. The sources identified as 'Emissions CAP' were removed to prevent double counting emissions.
	38468E2	The dryer application indicates that the location is 593400, 3575400. This location is outside the 10 km radius of the proposed project. The source was assigned the model ID of 426. Since the model ID is less than 10,000 and the source is greater than 10 km from the proposed project, the source was not retained for the cumulative analysis.

16-H: Building and structure downwash

1	How many buildings are present at the facility?	2	
2	How many above ground storage tanks are present at the facility?	14	
3	Was building downwash modeled for all buildings?	Yes X	No
4	If not, explain why.		
5	Building comments In addition to the buildings located at the site and tanks included in the permit application, the downwash analysis included significant equipment structures. The structures included in the downwash analysis are as listed below.		

16-H: Building and structure downwash

#	Name	.Description
1	IFR4	Oil Storage 4 (100,000 bbl)
2	IFR3	Oil Storage 3 (100,000 bbl)
3	IFR2	Oil Storage 2 (100,000 bbl)
4	IFR1	Oil Storage 1 (100,000 bbl)
5	OTK2	3rd Party Oil Storage 2 (2,000 bbl)
6	OTK4	3rd Party Oil Storage 3 (2,000 bbl)
7	OTK3	3rd Party Oil Storage 4 (2,000 bbl)
8	OTK5	3rd Party Oil Storage 5 (2,000 bbl)
9	OTK6	3rd Party Oil Storage 6 (2,000 bbl)
10	OTK1	3rd Party Oil Storage 1 (2,000 bbl)11 CHTR1 Cryo Hot Oil Heater (103.99 MMBtu/hr)
12	RHTR1	Regen Heater 1 (39.14 MMBtu/hr)
13	CHTR2	Cryo Hot Oil Heater (103.99 MMBtu/hr)
14	RHTR2	Regen Heater 2 (39.14 MMBtu/hr)
15	CHTR3	Cryo Hot Oil Heater (103.99 MMBtu/hr)
16	RHTR3	Regen Heater 3 (39.14 MMBtu/hr)
17	SHTR1	Stabilization Hot Oil Heater (64.83 MMBtu/hr)
18	SHTR2	Stabilization Hot Oil Heater (64.83 MMBtu/hr)
19	SHTR3	Stabilization Hot Oil Heater (64.83 MMBtu/hr)
20	SHTR6	Stabilization Hot Oil Heater (64.83 MMBtu/hr)
21	SHTR8	Stabilization Hot Oil Heater (64.83 MMBtu/hr)
22	SHTR7	Stabilization Hot Oil Heater (64.83 MMBtu/hr)
23	SHTR9	Stabilization Hot Oil Heater (64.83 MMBtu/hr)
24	SHTR11	Stabilization Hot Oil Heater (64.83 MMBtu/hr)
25	SHTR10	Stabilization Hot Oil Heater (64.83 MMBtu/hr)
26	SHTR4	Stabilization Hot Oil Heater (64.83 MMBtu/hr)
27	SHTR5	Stabilization Hot Oil Heater (64.83 MMBtu/hr)
28	TS1	Turbine Stack
29	HRSG1	Heat Recovery Steam Generator
30	TS2	Turbine Stack
31	HRSG2	Heat Recovery Steam Generator
32	TS3	Turbine Stack
33	TS4	Turbine Stack
34	HRSG3	Heat Recovery Steam Generator
35	HRSG4	Heat Recovery Steam Generator
36	BLD_49	Control Building
37	BLD_50	Warehouse
38	SHTR12	Stabilization Hot Oil Heater (64.83 MMBtu/hr)
39	PTWK1	Produced Water Tank
40	PTWK2	Produced Water Tank
41	GBS1	Produced Water Tank
42	OTK7	Slob Condensate Tank
43	NGLC1	NGL Cooler
44	NGLC3	NGL Cooler
45	NGLC2	NGL Cooler
46	TURBINE1	Turbine
47	TURBINE2	Turbine
48	TURBINE3	Turbine
49	TURBINE4	Turbine
50	CF	Air Condensor Cooler
51	ECD1	Combustor
52	TO1	Thermal Oxidizer
53	TO2	Thermal Oxidizer
54	TO3	Thermal Oxidizer

16-H: Building and structure downwash

	55	TK_DW	Deluge Water
	56	TK_MUW	Makeup Water Tank
	57	TK_RW1	Raw Water Tank
	58	TK_RW2	Raw Water Tank
	59	TK_RW3	Raw Water Tank
	60	TK_AMINE	Amine makeup
	61	TK_LO	Lube Oil Tank
	62	TK_LO2	Lube Oil Tank
	63	TK_UW	Utility Water Tank
	64	TK_WLO	Waste Lube Oil
	65	TK	Tank

16-I: Receptors and modeled property boundary

1	"Restricted Area" is an area to which public entry is effectively precluded. Effective barriers include continuous fencing, continuous walls, or other continuous barriers approved by the Department, such as rugged physical terrain with a steep grade that would require special equipment to traverse. If a large property is completely enclosed by fencing, a restricted area within the property may be identified with signage only. Public roads cannot be part of a Restricted Area. A Restricted Area is required in order to exclude receptors from the facility property. If the facility does not have a Restricted Area, then receptors shall be placed within the property boundaries of the facility. Describe the fence or other physical barrier at the facility that defines the restricted area. The facility is to be surrounded by a fence to preclude public access.		
2	Receptors must be placed along publicly accessible roads in the restricted area. Are there public roads passing through the restricted area?	Yes	No X
3	Are restricted area boundary coordinates included in the modeling files?	Yes X	No
4	Describe the receptor grids and their spacing. • 0 km – 50 meter spacing • 1-2 km – 100 meter spacing • 2-4 km – 250 meter spacing • 4-6 km – 500 meter spacing • up to 50 km – 1 km spacing		
5	Describe receptor spacing along the fence line. 50 m		
6	Describe the PSD Class I area receptors. The Class I areas are beyond the extent of the AERMOD model, i.e., greater than 50 km. Appendix W outlines screening to determine if a compliance demonstration for NAAQS or PSD increment may be necessary beyond 50 km. Based on application in the near-field the significance of the ambient impacts at or about 50 km from the new or modifying source, the necessity of a long range transport model is to be determined. Receptors were placed at 50 km from the Husky CDP using a polar grid spaced at 0.5 degree intervals from the 235 degree azimuth to the 250 degree azimuth, the direction of the Carlsbad Class I Area.		

16-J: Sensitive areas

1	Are there schools or hospitals or other sensitive areas near the facility? This information is optional (and purposely undefined), but may help determine issues related to public notice.	Yes	No X
2	If so, describe.		
3	The modeling review process may need to be accelerated if there is a public hearing. Are there likely to be public comments opposing the permit application?	Yes	No X

16-K: Modeling Scenarios

1	Identify, define, and describe all modeling scenarios. Examples of modeling scenarios include using different production rates, times of day, times of year, simultaneous or alternate operation of old and new equipment during transition periods, etc. Alternative operating scenarios should correspond to all parts of the Universal Application and should be fully described in Section 15 of the Universal Application (UA3). Two modeling scenarios have been proposed in the application. One scenario includes the natural gas plant without cogeneration and one includes natural gas fired turbines with a reduced number of heaters and thermal oxidizers. Separate 2-E tabs of the universal application describe the emission units included in each scenario. The modeling was performed with source groups; NOCOGEN for the scenario without cogeneration, COGEN for the scenario with cogeneration and ALL for all of the equipment operating simultaneously. The impacts for the source group all was used for the determination of compliance with the ambient standards. The ALL source group was used to cover transient equipment operation to meet heating needs if a Cogen unit is taken off line. Each scenario includes three flares; backup flare, cryo flare and stabilization flare. The backup flare has no emissions. Although the cryo flare and stabilization flare can't be fed simultaneously, both were included in the modeling runs. The facility will have eight emergency generators. The generators were included in each scenario. Although the generators are intermittent, the emissions for SO_2, CO & $PM_{10}/PM_{2.5}$ were modeled using the maximum generator emission rates and continuous operation. The average hourly emission rate was used for the NO_2 1-hr modeling as described in the March 1, 2001, EPA Memo "Additional Clarification Regarding Application of Appendix W Modeling Guidance for the 1-hour NO_2 National Ambient Air Quality Standard. The NMED has indicated that they do not agree with the annualizing of the hourly emissions. This modeling is included to demonstrate compliance under normal operating conditions for the COGEN, NOCOGEN and ALL scenarios, i.e., without operation of generators. The emergency generators in the turbine area (GEN6-GEN8) are utilized to black start the turbines. The normal operation as well as weekly testing will be well under 1-hour at a time. Given the short use duration and the anticipated frequency of these generators, it was determined that these generators would not significantly change the annual distribution of the daily maximum 1-hr NO_2 concentrations and are, therefore, not required to be included in the model. To address the use of the cryo emergency generators (GEN1-GEN5) a separate modeling run was executed. When the cryo emergency generators are operating, the turbines (TURBINE1-TURBINE4) and the turbine emergency generators (GEN6-GEN8) will not be operating. Additionally, there will be no SSM emissions from the flare, only pilot and purge gas. The NOx 1-hr impacts when operating the cryo emergency generators was determined using three generators operating simultaneously, and all equipment excluded that mentioned previously, at the maximum hourly emissions and continuous operation.
2	Which scenario produces the highest concentrations? Why? The scenario without the natural gas turbines produces the higher impacts. This is due to the lower release heights for the scenario without cogeneration.

16-K: Modeling Scenarios

3	Were emission factor sets used to limit emission rates or hours of operation? (This question pertains to the "SEASON", "MONTH", "HROFDY" and related factor sets, not to the factors used for calculating the maximum emission rate.)	Yes	No X

4	If so, describe factors for each group of sources. List the sources in each group before the factor table for that group. (Modify or duplicate table as necessary. It's ok to put the table below section 16-K if it makes formatting easier.) Sources:

5

Hour of Day	Factor	Hour of Day	Factor								
1		13									
2		14									
3		15									
4		16									
5		17									
6		18									
7		19									
8		20									
9		21									
10		22									
11		23									
12		24									

If hourly, variable emission rates were used that were not described above, describe them here:

6	Were different emission rates used for short-term and annual modeling?	Yes	No X
7	If yes, describe.		

16-L: NO_2 Modeling

1	Which types of NO_2 modeling were used? Check all that apply.	
	X	100% NO_X to NO_2 conversion
		ARM
		PVMRM
		OLM
		ARM2
		Other:
2	Describe the NO_2 modeling. The NOx modeling was performed assuming 100% conversion of NO_x to NO_2. Surrounding sources were accounted for by adding the monitored NO2 background to the significant impact analysis results.	
3	In-stack NO_2/NO_X ratio(s) used in modeling.	
4	Equilibrium NO_2/NO_X ratio(s) used in modeling.	

5	Describe/justify the use of the ratios chosen.
6	Describe the design value used for each averaging period modeled. 1-hour: High first high Annual: Highest annual average

16-M: Particulate Matter Modeling

1	Select the pollutants for which plume depletion modeling was used.			
		$PM_{2.5}$		
		PM_{10}		
	X	None		
2	Describe the particle size distributions used. Include the source of information.			
3	Was secondary PM modeled for $PM_{2.5}$? Only required for PSD major modifications that are significant for NOx and/or SOx. Optional for minor sources, but allows use of high eighth high.		Yes X*	No

*A Tier 1 Demonstration was conducted to determine the secondary $PM_{2.5}$ formation. The worst case MERP values from the three nearest EPA hypothetical sources were used to determine the estimated $PM_{2.5}$ secondary formation as follows. Selection of the MERP value is discussed in the modeling protocol, Attachment B.

$PM_{2.5}$ 24-hr = 1.2 ug/m^3 x [NOx TPY/7,331 + SO2 TPY/2,170]

$PM_{2.5}$ Annual = 0.2 ug/m^3 x [NOx TPY/26,780 + SO2 TPY/25,929]

Scenario	$PM_{2.5}$ 24-hr	$PM_{2.5}$ Annual
Cogen	0.071	0.002
NonCogen	0.051	0.002

16-N: Setback Distances and Source Classification

1	Portable sources or sources that need flexibility in their site configuration requires that setback distances be determined between the emission sources and the restricted area boundary (e.g. fence line) for both the initial location and future locations. Describe the setback distances for the initial location.		
2	Describe the requested, modeled, setback distances for future locations, if this permit is for a portable stationary source. Include a haul road in the relocation modeling.		
3	The unit numbers in the Tables 2-A, 2-B, 2-C, 2-E, 2-F, and 2-I should match the ones in the modeling files. Do these match?	Yes X	No
4	Provide a cross-reference table between unit numbers if they do not match. It's ok to place the table below section 16-N for easier formatting.		
5	The emission rates in the Tables 2-E and 2-F should match the ones in the modeling files. Do these match?	Yes X	No
6	If not, explain why.		
7	Have the minor NSR exempt sources or Title V Insignificant Activities" (Table 2-B) sources been modeled?	Yes	No X
8	Which units consume increment for which pollutants?		

	As a major PSD source all of the sources will consume increment with the exception of the emergency generators GEN1-GEN8..		
9	PSD increment description for sources. (for unusual cases, i.e., baseline unit expanded emissions after baseline date).		
10	Are all the actual installation dates included in Table 2A of the application form, as required? This is necessary to verify the accuracy of PSD increment modeling.	Yes X	No
11	If not please explain how increment consumption status is determined for the missing installation dates.		

16-O: Flare Modeling

1	For each flare or flaring scenario, complete the following			
	Flare ID (and scenario)	Average Molecular Weight	Gross Heat Release (cal/s)	Effective Flare Diameter (m)
	FL1			
	CRYO-MSS	22.74	51,955,132.67	6.37
	Pilot & Purge	18.91	679,282.4965	
	FL2			
	OVHD-MSS	45.54	31,202,274.86	4.65
	Pilot & Purge	18.91	679,282.4965	
	FL1 & FL2	*(cryo emergency generator scenario)*		
	Pilot & Purge	18.91	679,282.4965	0.733

16-P: Volume and Related Sources

1	Were the dimensions of volume sources different from standard dimensions in the Air Quality Bureau (AQB) Modeling Guidelines?	Yes	No X
2	If the dimensions of volume sources are different from standard dimensions in the AQB Modeling Guidelines, describe how the dimensions were determined.		
3	Describe the determination of sigma-Y and sigma-Z for fugitive sources. Sigma-z and sigma-y values were selected from Tables 28 & 29 of the NMED guideline for large trucks.		
4	Describe how the volume sources are related to unit numbers. Or say they are the same. Haul Roads have application ID of ROAD. The model uses source ids L0000001 through L0000052 for this source.		
5	Describe any open pits. None		

6	Describe emission units included in each open pit.

16-Q: Background Concentrations

1

Identify and justify the background concentrations used.

A waiver to use existing ambient air quality monitoring in lieu of performing preconstruction monitoring. The monitors used as a basis for the waiver of preconstruction monitoring were used to determine the background air quality. The monitoring is summarized in the following tables.

Monitor	Year	CO 1-hr 2nd Max (ppm)	CO 8-hr 2nd Max (ppm)
El Paso, TX	2018	4.9	3.7
	2017	4.2	2.9
	2016	3.2	2
Average		4.1	2.9

Monitor	Year	NO_2 98th %ile (ppb)	NO_2 Annual Mean (ppb)	$PM_{2.5}$ 98th %ile (ug/m^3)	$PM_{2.5}$ Wtd. Mean (ug/m^3)	PM_{10} 24-hr 2nd Max (ug/m^3)
Hobbs, NM	2018	36	5	18	8	.
	2017	32	4	17	9	.
	2016	33	4	12	5.9	.
	2014					30
	2013					47
	2012					37
Average		33.7	4.3	13.4	7.6	38

SO_2 impacts are below the significant monitoring concentration and a waiver from preconstruction monitoring is requested based on this. The background for SO_2 was determined by explicitly modeling the background sources provided by the NMED.

2	Were background concentrations refined to monthly or hourly values?	Yes	No X

16-R: Meteorological Data

1

Identify and justify the meteorological data set(s) used.

Carlsbad year 2015 as downloaded from the NMED website was used in the modeling.

The project site and the Carlsbad meteorological station are both located in the same climate division, Southeastern Plains. The Carlsbad met station is approximately 22 miles from the project location and is located between the nearest Class I area and the project location.

2	Discuss how missing data were handled, how stability class was determined, and how the data were processed, if the Bureau did not provide the data. The met data was run as downloaded from NMED website.

16-S: Terrain

1	Was complex terrain used in the modeling? If no, describe why. Yes
2	What was the source of the terrain data? http://www.webgis.com/ , downloaded through Lakes Environmental AERMOD-View GUI. AERMAP - Version 18081, the terrain processor for AERMOD was used to assign elevation and hill-height scaling factors for each receptor. The base elevation of the facility is 957.44 meters and on-site sources and buildings were assigned this elevation. .

16-T: Modeling Files

1	Describe the modeling files: Significance modeling was conducted with all of the facility sources. Source groups were used for the proposed scenarios and the source group ALL was included to demonstrate compliance with different combinations of equipment. Impacts of the source group ALL were compared to the modeling significance levels. These files are contained in the folder SIA. CO and SO2 were found to be below the modeling significance levels and no further analysis was conducted. NOx cumulative analysis was determined by adding the modeled background to the NOx significance impacts. Cumulative modeling for PM10 and PM2.5 is contained in the folders \Surrounding Sources\PM25 & PM10. Surrounding source files provided by the NMED are also contained in this folder. The source groups SROUND and PSD assigned in the NMED provided files were used. The PM2.5 file also contains a source group HUSKY. This source group was used in case a culpability analysis would be required, however, no exceedances were modeled.. The folder \Genset\ contains the analysis of the operation and use of the cryo emergency generators The folder \Viscreen\ contains the Viscreen summary and output for the evaluation at the Living Desert Zoo & Gardens. The folder \CL1\ contains the evaluation of the impacts at the extent of the AERMOD model in the direction of the Class 1 area. The folder \Terrain NED\ files contains the terrain tiff files and AERMAP files.

	File name (or folder and file name)	Pollutant(s)	Purpose (ROI/SIA, cumulative, culpability analysis, other)
	\SIA\	NOx, SO_2, CO, PM_{10} & $PM_{2.5}$	Significant Impact Analysis
	\SIA\[Pollutant]\ *.adi, *.ado, *.sum, *.bpi		Input, Output, Summary files, BPIP files
	\SIA\[Pollutant]\[Pollutant].AD		Plot Files
	[avg period]H[rank]G[source grp ID]		001 – NoCogen Source Group 002 – Cogen Source Group ALL – All Source Group
	\CIA\	SO_2, PM_{10} & $PM_{2.5}$	Cumulative Impact Analysis

16-T: Modeling Files

	\CIA\ [Pollutant]\ *.adi, *.ado, *.sum, *.bpi		Input, Output, Summary files, BPIP files
	[avg period]H[rank]G[source grp ID]		001 – SROUND source group 002 – PSD source group
	\Genset\ Genset.adi, Genset.ado, NOx.sum	NO_2	Input, Output, Summary files
	\Genset\Genset.ad\		Plot Files
	\Viscreen\Cogen.sum, Cogen.out	Visibility	Class II Visibility Analysis
	\CL1\	PM_{10}, $PM_{2.5}$ & NO_x	Class I Significance Analysis
	\CL1\[Pollutant]\ *.adi, *.ado, *.sum		Input, Output, Summary
	\CL1\[Pollutant]\[Pollutant].AD		Plot Files
	[avg period]H[rank]G[source grp ID]		001 – NoCogen Source Group 002 – Cogen Source Group ALL – All Source Group
	\Terrain NED Files\	Receptors	Terrain Elevation Files
	Root Directory	Georeferenced facility layout jpg	04 XTO HUSKY AIR PERMIT - WITH COGEN - 3 TRAINS.jpg, .wtd, .jgw

16-U: PSD New or Major Modification Applications

1	A new PSD major source or a major modification to an existing PSD major source requires additional analysis. Was preconstruction monitoring done (see 20.2.74.306 NMAC and PSD Preapplication Guidance on the AQB website)?	Yes	No X
2	If not, did AQB approve an exemption from preconstruction monitoring?	Yes X	No
3	Describe how preconstruction monitoring has been addressed or attach the approved preconstruction monitoring or monitoring exemption. See Attachment B.		
4	Describe the additional impacts analysis required at 20.2.74.304 NMAC. All PSD applications must include an Additional Impacts Analysis based on existing air quality, the quantity of proposed emissions for pollutants subject to PSD review, the sensitivity of local soils and vegetation, and the visibility in the impact area. The analysis is divided into four parts: 1. Growth analysis 2. Soils and vegetation analyses 3. Visibility impairment analysis 4. Class I area analysis **Growth analysis:** The purpose of the growth analysis is to predict quantitatively the amount of new growth likely to occur to support the source or modification under review and to estimate the emissions that will result from the associated growth. First, an assessment is made regarding the amount of residential growth the modified source will bring to the area. This depends on the size of the available work force, the number of new employees, and the availability of housing in the area. Associated commercial and industrial growth consists of new sources providing goods and services to the new employees and to the modified source itself. Once these anticipated growth effects have been considered, an estimate of the air pollutant emissions that would likely result from the associated growth is made.		

16-U: PSD New or Major Modification Applications

XTO expects that most of the employees of the proposed facility will be existing residents of nearby towns/counties; therefore, residential growth is expected to be minimal. Further, XTO does not anticipate any associated industrial or commercial growth as a result of the new facility. For these reasons, any air quality impact resulting from industrial, commercial, and residential growth in the local area due to the proposed project will be negligible.

Soil and Vegetation analysis: The secondary NAAQS were established to protect certain air quality-related values that were not sufficiently protected by the primary NAAQS. The secondary NAAQS represent concentration levels below which no harmful effects to either soil or vegetation are expected. As demonstrated in this application, the proposed project will have no adverse impact on the NAAQS. Thus, it can be concluded that any impact on soil and vegetation will be negligible.

Visibility Analysis: A Class II Visibility Analysis is required to determine impact the facility will have upon Class II areas. The NMED Modeling guideline states to analyze the change in visibility of a nearby peak or mountain for this analysis, or in the absence of nearby mountains, analyze the visibility of clear sky from nearby state or local parks. The NMED has indicated that the VISCREEN analysis for clears sky at the Living Desert Zoo & Gardens is acceptable to assess the visibility impairment in the Class II area.

The analysis follows the prescription in the U.S. EPA's Workbook for Plume Visual Impact Screening and Analysis wherein three levels of screening procedures are outlined. If the criteria for the first (most conservative) screening level are met, no further analysis is required. The VISCREEN model is recommended for the first level (Level 1) screen. If calculated values from the VISCREEN model are greater than the standardized screening values, the emissions are judged to have the potential for visibility impairment. If the potential for visibility impairment is indicated, the next level analysis, Level 2 analysis, is required. The methods in this workbook are designed for Class I area impacts; however, the procedures are generally applicable to other areas and therefore are used in this analysis. The VISCREEN file is provided with the Class II modeling files on CD.

Results from a VISCREEN analysis are expressed in terms of perceptibility (ΔE) and contrast. The color contrast parameter, ΔE, is used as the primary basis for determining the perceptibility of plume visual impacts in screening analyses. ΔE provides a single measure of the difference between two arbitrary colors as perceived by humans. EPA guidance for plume visual impact screening suggests a critical value for ΔE of 2.0 for untrained observers under reasonable worst-case conditions. A green contrast value is also recorded because the human eye is most sensitive to intensity changes in green. The critical value for this contrast is 0.05.

The pollutant input used for the Level 1 analysis was 177.00 tpy PM10 and 259.90 tpy NOx which represent the maximum daily emissions. The background visual range of 110 km was selected from Figure 9 of the Workbook for Plume Visual Impact Screening and Analysis. The distance to the Class II area was found to be 34.4 km and was used for the distance inputs in VISCREEN. The VISCREEN analysis for clear sky indicates that the perceptibility is below the screening value of 2.0 at 1.799 and the contrast is below the screening value of 0.05 at 0.027. The Level 1 VISCREEN results indicate no potential adverse visibility impact is projected for inside the Living Desert State Park.

In addition to the VISCREEN analysis, the Class II ambient impact modeling analysis indicates that visibility at the Living Desert Zoo & Gardens will not be impacted. The Class II impacts for the project were found to be below the secondary NAAQS. Secondary standards provide public welfare protection, including protection against decreased visibility and damage to animals, crops, vegetation, and buildings. Project ambient impacts were found to be below the modeling significance levels for the Cogen and non-Cogen scenarios, indicating that visibility in the Living Desert Zoo & Gardens would not be impaired.

CLASS AREA I ANALYSES: One of the purposes of the PSD program is "to preserve, protect, and enhance the air quality in national parks, national wilderness areas, national monuments, national seashores, and other areas of special national or regional natural, recreational, scenic, or historic value." Under the PSD provisions, Congress established a land classification scheme for these areas of the country (Class I), specifically including:

1. International parks;
2. National wilderness areas which exceed 5,000 acres in size;

16-U: PSD New or Major Modification Applications

3. National memorial parks which exceed 5,000 acres in size; and
4. National parks which exceed 6,000 acres in size.

Class I area analyses, when necessary, typically include a Class I PSD Increment Assessment for NOX, SO2, and PM10, and an Air Quality Related Values (AQRV) assessment including a visibility analysis for increases in visibility impairing pollutants and a deposition analysis for nitrogen and sulfur.

NMED requires Class I Area analyses for proposed PSD projects that are less than 100 km from a Class I Area. The Class I Areas nearest the proposed site are the Carlsbad Caverns National Park in southern New Mexico, Guadalupe Mountains National Park in western Texas, Salt Creek Wilderness Area in southeast New Mexico, and White Mountain Wilderness Area in central New Mexico. Two of the Class I Areas are within 100 km of the site: Carlsbad Caverns National Park, which is approximately 50.8 km from the site, and Guadalupe Mountains National Park, which is approximately 92.8 km from the site.

Class I Area AQRV Analysis
A threshold ratio of emissions to distance, below which AQRV review is not required for sources located greater than 50 km from a Class I area, was established in October 2010. Specifically, if Q (tpy) / d (km) is less than 10, no AQRV analysis is required. Q is the combined emissions increase (based on 24-hour maximum emissions) of SO2, NOX, PM10, and sulfuric acid mist (H2SO4) in tpy and d is the distance to the nearest Class I area in km.

For the proposed project, Q is 487.64 tpy and d is 50.6 km; therefore, Q/d is 9.64. Thus, XTO assumes the requirement for assessing the impact to AQRVs is satisfied.

Class I Increment Analysis
If the proposed construction of a PSD major source is within 100 km of a Class I area, then the NMED guideline requires an assessment of the PSD increment consumption at the Class I area. The Carlsbad Caverns and Guadalupe Mountains Class I areas are within 100 km of the Husky CDP site; however, these areas are outside the extent of the near field model. The Appendix W guideline provides a screening approach in which the ambient impacts at or about 50 km from the new or modifying source are evaluated to determine if significant impacts beyond 50 km are indicated. Receptors were placed at 50 km from the Husky CDP location in the direction of the Carlsbad Caverns and Guadalupe Mountain Class I areas. The impacts at this location were below the Class I significant impact levels and indicate that impacts beyond 50 km in the Class I areas will be below the Class I significant levels.

5

If required, have ozone and secondary PM2.5 ambient impacts analyses been completed?

The ozone and secondary $PM_{2.5}$ impacts were determined as discussed below.

Ozone and secondary PM2.5 were assessed through a Tier 1 Demonstration following EPA example guidance in "Final MERPs Guidance Webinar, June 13, 2019." The EPA provided example provides the following steps for a Tier 1 Demonstration:

Step 1) Start with lowest, most conservative, illustrative MERPs for selected Climate Zone
The proposed Husky CDP is located in the Southwest Climate Zone. The most conservative illustrative MERPs from the EPA spreadsheet "illustrative_merps_epa_modeling_2018dec28version.xlsx" were extracted and are presented below.

METRIC	PRECURSOR	POLL	State	County	FIPS	EMISSIONS	STACKHEIGHT	CONC	MERP	LATITUDE	LONGITUDE	CZ	CZNAME	terravg	urbmax	DOMAIN	SOURCE
MDA8	VOC	OZONE	Utah	Utah	49049	500	10	0.456	1097	40.1101	-111.9363	7	Southwest	1786	21.7	12WUS1	15
MDA8	NOX	OZONE	Arizona	Coconino	4005	500	10	2.446	204	35.4277	-111.2703	7	Southwest	1786	7.4	12US2	36
DAILY	NOX	NITRATE	Colorado	Weld	8123	500	10	0.092	6514	40.6215	-104.0374	7	Southwest	1460	6.2	12WUS1	3
ANNAVG	NOX	NITRATE	Colorado	Weld	8123	500	10	0.008	11960	40.6215	-104.0374	7	Southwest	1460	6.2	12WUS1	3
DAILY	SO2	SULFATE	Colorado	Weld	8123	500	10	0.398	1508	40.6215	-104.0374	7	Southwest	1460	6.2	12WUS1	3
ANNAVG	SO2	SULFATE	Colorado	Weld	8123	500	10	0.009	10884	40.6215	-104.0374	7	Southwest	1460	6.2	12WUS1	3

16-U: PSD New or Major Modification Applications

Given that the most conservative MERP values are below the project increases for the ozone precursors for VOC and NOx. The second step of the Tier 1 demonstration was evaluated.

Step 2) Screen the closest hypothetical sources to the project facility and select the lowest, most conservative, MERPs

The EPA did not provided guidance on the number of "closest" facilities to select in Step 2. The provided example used three nearby hypothetical sources. The most conservative MERP values from the three closest illustrative hypothetical sources to the Husky CDP site were extracted from the EPA spreadsheet "illustrative_merps_epa_modeling_2018dec28version.xlsx" and are presented below.

METRIC	PRECURSOR	POLL	State	County	FIPS	EMISSIONS	STACKHEIGHT	CONC	MERP	LATITUDE	LONGITUDE	CZ	CZNAME	terravg	urbmax	DOMAIN	SOURCE
MDA8	VOC	OZONE	Texas	Terry	48445	500	10	0.032	15669	33.3688	-102.1459	6	South	1011	31.9	12WUS1	5
MDA8	NOX	OZONE	New Mexico	Otero	35035	500	10	1.209	414	32.7567	-105.7669	7	Southwest	1692	4.4	12WUS1	10
DAILY	NOX	NITRATE	Texas	Terry	48445	500	10	0.082	7331	33.3688	-102.1459	6	South	1011	31.9	12WUS1	5
ANNAVG	NOX	NITRATE	Texas	Terry	48445	500	10	0.004	26780	33.3688	-102.1459	6	South	1011	31.9	12WUS1	5
DAILY	SO2	SULFATE	Texas	Terry	48445	500	10	0.277	2170	33.3688	-102.1459	6	South	1011	31.9	12WUS1	5
ANNAVG	SO2	SULFATE	Texas	Terry	48445	500	10	0.004	25929	33.3688	-102.1459	6	South	1011	31.9	12WUS1	5

The illustrative MERP values were used to develop the equations for evaluating the ozone and secondary PM2.5 impacts. Ozone impacts are considered insignificant if the following equation is met:

$$[\text{TPY Project NOx emissions}/414 + \text{TPY Project VOC emissions}/15{,}669] \leq 1$$

PM2.5 secondary impacts were determined from the following equations:

$$PM_{2.5}\ 24\text{-hr} = 1.2\ ug/m^3 \times [\text{NOx TPY}/7{,}331 + SO_2\ \text{TPY}/2{,}170]$$

$$PM_{2.5}\ \text{Annual} = 0.2\ ug/m^3 \times [\text{NOx TPY}/26{,}780 + SO_2\ \text{TPY}/25{,}929]$$

A Tier 1 Demonstration was used to determine the ozone and secondary $PM_{2.5}$ impacts. The demonstration was described in the approved modeling protocol, attached. Ozone impacts were evaluated and determined to be insignificant by the following equation:

$$[\text{TPY Project NOx emissions}/414 + \text{TPY Project VOC emissions}/15{,}669] \leq 1$$

Cogen Scenario

$$(259.9/414 + 489/15669) \leq 1$$
$$0.66 \leq 1$$

No Cogen Scenario

$$(234.1/414 + 354.8/15669) \leq 1$$
$$0.59 \leq 1$$

$PM_{2.5}$ secondary impacts are presented in Section 16-M.

16-V: Modeling Results

1	If ambient standards are exceeded because of surrounding sources, a culpability analysis is required for the source to show that the contribution from this source is less than the significance levels for the specific pollutant.
2	Identify the maximum concentrations from the modeling analysis.

Pollutant	Period	Facility Concentration (µg/m3)	Total Modeled Concentration (µg/m3)	Total Modeled Concentration (PPM)	Background Concentration	Cumulative Concentration	Standard	Value of Standard	Units of Standard, Background, and Total	Percent of Standard
Class II Area										
CO	1-hr	1122.20292	1122.20292		N/A	1122.20292	SIL	2000	µg/m^3	56.1
CO	8-hr	595.97997	595.97997		3,320	3915.97997	NMAAQS	9,960.1	µg/m^3	39.3
PM_{10}	24-hr	19.25955	29.67907		38	67.67907	NAAQS	150	µg/m^3	45.1
PM_{10}	24-hr		19.12062		N/A	19.12062	PSD	30	µg/m^3	63.7
PM_{10}	Annual	4.59716	6.29669		N/A	6.29669	PSD	17	µg/m^3	37.0
NO_2	1-hr	114.85595	114.85595		63.4	178.25595	NAAQS	188.03	µg/m^3	94.8
NO_2	Annual	6.74282	6.74282		8.1	14.84282	NMAAQS	94.02	µg/m^3	15.8
NO_2	Annual	6.74282	6.74282		8.1	14.84282	PSD	25	µg/m^3	59.3
$PM_{2.5}$	24-hr		7.97914		13.471*	21.4499645	NAAQS	35	µg/m^3	61.2
$PM_{2.5}$	Annual	1.93940	2.82182		7.602*	10.42382	NAAQS	12	µg/m^3	86.9
$PM_{2.5}$	24-hr		7.93295		0.071*	8.00395	PSD	9	µg/m^3	88.9
$PM_{2.5}$	Annual		1.83242		0.002*	1.83442	PSD	4	µg/m^3	45.9
SO_2	1-hr		37.35932		N/A	37.35932	NAAQS	198	µg/m^3	18.9
SO_2	3-hr	7.76284	7.76284		N/A	7.76284	SIL	25	µg/m^3	31.1
SO_2	24-hr	4.13014	4.13014		N/A	4.13014	SIL	5	µg/m^3	82.6
SO_2	Annual	0.65540	0.65540		N/A	0.65540	SIL	1	µg/m^3	65.5
Cryo genset operation										
NO_2	1-hr	122.10462	122.10462		63.4	185.50462	NAAQS	188.03	µg/m^3	98.7
Class I @ 50 km Radius										
NO2	Annual	0.01539	0.01539		N/A	0.01539	SIL	0.1	µg/m^3	15.4
$PM_{2.5}$	Annual	0.00485	0.00485		0.002*	0.00685	SIL	0.05	µg/m^3	13.7
$PM_{2.5}$	24-hr	0.13060	0.13060		0.071*	0.2016	SIL	0.27	µg/m^3	74.7
PM_{10}	Annual	0.00491	0.00491		N/A	0.00491	SIL	0.2	µg/m^3	2.5
PM_{10}	24-hr	0.13308	0.13308		N/A	0.13308	SIL	0.3	µg/m^3	44.4

***Includes secondary PM2.5**

16-W: Location of maximum concentrations

1	Identify the locations of the maximum concentrations.

Pollutant	Period	UTM East (m)	UTM North (m)	Elevation (ft)	Distance (m)*	Radius of Impact (ROI) (m)
Class II Area						
CO	1-hr SIL	603215.68	3588193.90	963.03	420	0
CO	8-hr SIL	603314.74	3588193.89	963.09	439	441 m
PM_{10}	24-hr NAAQS	603095.18	3587355.73	953.24	429	1,074 m
PM_{10}	24-hr PSD	602955.73	3587355.73	956.66	476	1,074 m
PM_{10}	Annual PSD	602909.25	3587355.73	957.15	499	1,130 m
NO_2	1-hr NAAQS	603250.00	3588200.00	962.91	430	49,047 m
NO_2	Annual NAAQS	603215.68	3588193.90	963.03	420	2,517 m
NO_2	Annual NAAQS	603215.68	3588193.90	963.03	420	2,517 m
$PM_{2.5}$	24-hr NAAQS	603661.49	3588193.83	963.21	638	6,567 m
$PM_{2.5}$	Annual NAAQS	603215.68	3588193.90	963.03	420	3,858 m
$PM_{2.5}$	24-hr PSD	603250.00	3588200.00	962.91	430	6,567 m
$PM_{2.5}$	Annual PSD	603215.68	3588193.90	963.03	420	3,858 m
SO_2	1-hr SIL	602500.00	3589400.00	1000.09	1760	2,265 m
SO_2	3-hr SIL	603200.00	3588300.00	967.29	524	0
SO_2	24-hr SIL	603250.00	3588200.00	962.91	430	0
SO_2	Annual SIL	603215.68	3588193.90	963.03	420	0
Cryo genset operation						
NO_2	1-hr NAAQS	602600.00	3588450.00	986.14	889	49,047 m
Class I @ 50 km						
NO2	Annual	560902.33	3561407.00	1087.10	50,000	N/A
$PM_{2.5}$	Annual	560902.33	3561407.00	1087.10	50,000	N/A
$PM_{2.5}$	24-hr	561371.20	3560671.01	1074.30	50,000	N/A
PM_{10}	Annual	560902.33	3561407.00	1087.10	50,000	N/A
PM_{10}	24-hr	561371.20	3560671.01	1074.30	50,000	N/A

***Distance was determined from the center of facility as (603179, 3587776).**

16-X: Summary/conclusions

1	A statement that modeling requirements have been satisfied and that the permit can be issued. The ambient air quality modeling was performed based on approved regulatory models and techniques as outlined in the New Mexico Air Quality Bureau Air Dispersion Modeling Guidelines Revised February 7, 2019, EPA Memo "Additional Clarification Regarding Application of Appendix W Modeling Guidance for the 1-hour NO_2 National Ambient Air Quality Standard," March 1, 2011, and the approved modeling protocol contained in Attachment B. The facility was modeled with all equipment at the maximum lb/hr emission rate for all pollutants and averaging periods, with the exception of the NO_2 emissions from emergency generators. As intermittent sources, the generators were modeled using the average NOx emissions consistent with the approach outlined in EPA Memo "Additional Clarification Regarding Application of Appendix W Modeling Guidance for the 1-hour NO_2 National Ambient Air Quality Standard," March 1, 2011. To address NMED concerns with the annualizing of hourly emissions, the use of the cryo emergency generators was evaluated using 3 generators operating simultaneously with facility equipment that could operate at the same time.

The turbine emergency generators (GEN6-GEN8) were found to be intermittent with an expected use that would not significantly affect the annual distribution of NO_2 daily maximum 1-hour values and were, therefore, excluded from the modeling. The duration of each use will be well less than an hour at a time.

The facility impacts were found to be below the modeling significant impact level for the CO 1-hr and SO_2 3, 24 and annual averaging periods. Additional analysis of these pollutant averaging periods was not performed. The maximum impacts are listed in Section 16-V.

A cumulative analysis was performed for the remaining pollutant averaging periods. The cumulative CO and NOx analysis consisted of adding monitored background to the maximum highest-first-high impacts determined in the significant impact analysis. The ARM2 method was not used in this NO2 analysis as source groups were used and not all of the equipment in the model would operate simultaneously. The NO2 evaluation of the cryo emergency generators only included equipment that could operate simultaneously. The ARM2 method was used in the analysis and the highest-eighth-high design value was used to determine compliance.

For the PM_{10}, $PM_{2.5}$ and SO_2 1-hr cumulative analysis, the receptors having impacts above the modeling significant impact analysis were used. The AERMOD ready surrounding source files provided by the NMED were used in the analysis. For the PM_{10} and $PM_{2.5}$ analysis, sources greater than 10 km from the Husky site with source IDs less than 10000 were removed. All sources greater than 25 km were removed as no sources were identified with greater than 1,000 lb/hr emissions. No sources were removed from the SO_2 AERMOD ready file provided by the NMED. Facility sources were added to the file and to both the PSD and SROUND source groups, with the exception of the emergency generators which were added to the SROUND source group only.

The cumulative impacts, inclusive of monitored background, were found to be below the ambient air quality standards and PSD increments as presented in Section 16-V.

PSD impacts in the Class I area were evaluated by placing receptors at 50 km from the Husky CDP location in the direction of the Class I area. This is the valid extent of the AERMOD model. Impacts at this location were below the Class I modeling significance levels indicating an evaluation with a long range transport model is not necessary.

The facility impacts were found to be below the ambient air quality standards or the modeling significance levels and, therefore, will not cause or contribute to any violation of the ambient air quality standards and the permit can be issued.

Attachment A – Preconstruction Monitoring Waiver

Pre-construction Monitoring Waiver Request

XTO Energy Inc. - Husky CDP

Eddy County, New Mexico

Contents

Summary 1
Description of Facility 2
Topography, Elevation, Climate, and Vegetation 2
Demographics 3
Regulated Background Sources 3
Conclusion 4

Tables

Table 1 - Facility Wide Emission Rates Comparison to SERs of Table 2 of 20.2.74.502 NMAC 7
Table 2 - New Mexico Locations Climate Normals 7
Table 3 - El Paso, TX Climate Normals 7
Table 4 - Emission Inventory within 10 km of Project Site (TPY) 8
Table 5 - Emissions Inventory within 10 km of Carlsbad Monitor (TPY). 8
Table 6 - Emissions Inventory within 10 km of Hobbs Monitor (TPY) 8
Table 7 - Emissions Inventory within 10 km of El Paso Monitor (TPY) 9
Table 8 - Proposed Existing Monitoring for CO 10
Table 9 - Proposed Existing Monitoring for NO2, O3, PM_{10} & $PM_{2.5}$ 10

Figures

Figure 1 - Air Quality Related Locations 12
Figure 2 - Sources within 10 km of Project or Monitor Location 13
Figure 3 - Wind Rose from Surrounding NWS stations. 13
Figure 4 - Hysplit Backwards Trajectory for Ozone 8-hr Design Value Events at Hobbs Monitoring Station 14
Figure 5 - Hysplit Backward Trajectories for NO2 1-hr Design Events at Hobbs Monitoring Station 14
Figure 6- Hysplit Backwards Trajectory for Ozone 8-hr Design Value Events at Carlsbad Monitoring Station 14
Figure 7 - Hysplit Backward Trajectories for NO2 1-hr Design Events at Carlsbad Monitoring Station 14
Figure 8 - Backwards Trajectory PM2.5 Design Event Hobbs Monitor 6-3-2018 7:00 UTC 14
Figure 9-Backwards Trajectory PM2.5 Design Event Hobbs Monitor 6-15-2017 7:00 UTC 14
Figure 10-Backwards Trajectory PM2.5 Design Event Hobbs Monitor 6-18-2016 7:00 UTC 14
Figure 11 - Aertesia Wind Rose 2014-2018 15
Figure 12 - Carlsbad Wind Rose 2014-2018 15
Figure 13 - Hobbs Wind Rose 2014-2018 16
Figure 14 - El Paso Wind Rose 2014-2018 16

Summary

XTO Energy Inc. (XTO) is proposing to construct a natural gas processing and central delivery point located approximately 13.9 miles NE of Loving, NM in Eddy County. The location of the proposed facility in relation to topographical features, Class I Areas, nearby National Weather Service (NWS) meteorological stations, air quality monitoring locations and EPA hypothetical photochemical modeling locations is shown in Figure 1. The facility will be classified as a major stationary source and will trigger the Significant Emission Rates (SER) for NOx, CO, VOC, PM_{10}, and $PM_{2.5}$. Per the monitoring requirements found in regulation 20.2.74.306.A NMAC:

"Any application for a permit under this part shall contain an analysis of ambient air quality. Air quality data can be that measured by the applicant or that available from a government agency in the area affected by the major stationary source or major modification. The analysis shall contain the following:

(1) for a major stationary source, each pollutant for which the potential to emit is equal to or greater than the significant emission rates as listed in Table 2 of this part (20.2.74.502 NMAC)"

Preliminary calculations for the proposed Husky CDP project show NOx, CO, VOC, PM_{10} and $PM_{2.5}$ emissions are above the significant emission rates listed in 20.2.74.502 NMAC Table 2. Per 20.2.74.306.C NMAC:

"Continuous air quality monitoring data shall be required for all pollutants for which a national ambient air quality standard exists. Such data shall be submitted to the department for at least the one (1) year period prior to receipt of the permit application. The department has the discretion to:

(1) determine that a complete and adequate analysis can be accomplished with monitoring data gathered over a period shorter than one year but not less than four months; or

(2) determine that existing air quality monitoring data is representative of air quality in the affected area and accept such data in lieu of additional monitoring by the applicant."

SO_2 impacts are below the significant monitoring concentration and it is requested a waiver for preconstruction monitoring of SO_2 be granted as allowed by NMAC 20.2.74.306. XTO has reviewed the existing ambient air quality network for the remaining pollutants and determined, based on the requirements of Ambient Monitoring Guidelines for PSD (5/87), the existing ambient monitoring program operated by the NMED is sufficient to meet the needs of any pre-construction monitoring requirements and thus may be used in lieu of such pre-construction monitoring requirements. XTO is proposing to use background data from the El Paso Chamizal (AQS Site ID: 48-141-0044) and the5ZS Hobbs Jefferson (AQS Site ID: 35-025- 0008) listed in Table 8 and Table 9, in lieu of collecting site-specific ambient data for NO_2, CO, VOC, PM_{10} and $PM_{2.5}$.

Authorized by NMAC 20.2.74.306.C(2), the New Mexico Environmental Department (NMED) has the discretion to determine that existing air quality monitoring data is representative of air quality in the affected area and accept such data in lieu of additional monitoring by the applicant. This document is being submitted to support a determination that the air quality in the region of the proposed site is adequately monitored and representative of the air quality in the area of the proposed site. XTO requests that the NMED exercise its discretion and approve the existing air quality monitoring as representative for use in lieu of conducting pre-construction monitoring.

Description of Facility

The Husky Central Delivery Point (CDP) will be located in Eddy County, New Mexico approximately 13.9 miles NE of Loving. The facility is a Gas Processing Facility with Oil and NGL Stabilization and will produce sales gas, Y-Grade NGL, and spec oil products. The Husky CDP will be built over multiple phases for processing natural gas, oil stabilization and NGL stabilization. Additionally, the facility will potentially include gas turbine and steam turbines to provide power and heat to the facility (cogeneration).

Process equipment at this facility is anticipated to consist of the following point source emissions: natural gas fired turbines, stabilization heaters, cryogenic heaters, amine regenerator heaters, thermal oxidizers, combustors, and emergency flares. Facility tank sources will include: internal floating roof oil tanks, fixed roof oil tanks, fixed roof produced water tanks, a gun barrel tank, a slop oil tank, and loading operations. Table 1 references facility wide emissions compared to Significant Emission Rates of Table 2 of 20.2.74.502 NMAC.

Topography, Elevation, Climate, and Vegetation

The proposed facility location is in the Pecos Valley Region of the Great Plains physiographic province. Lea County (including the city of Hobbs, New Mexico) and most of Eddy County (including the cities of Artesia and Carlsbad) are located within this region and physiographic province.

Terrain surrounding the facility slopes from the northeast to southwest. The project site is at an elevation of 960 meters with terrain within the 50 km area ranging from approximately 860 meters to 1280 meters. The location of the proposed site relative to meteorological stations and ambient air quality monitors is depicted in Figure 1. The individual wind rose for Hobbs, Artesia and Carlsbad are shown in Figure 11 through Figure 14. The proposed site and existing monitor locations are located in the Southeastern Plains Climate Division. The climate is an arid steppe region or semiarid region generally receiving little rain and having low humidity. The closest climate station to the proposed site is the “WASTE ISOLT N PILOT PLANT” site. The seasonal normal values for this climate station along with the normal for Carlsbad and Hobbs is presented in Table 2 and Table 3. The average temperature values do not vary between the sites. The average annual precipitation at Hobbs is slightly higher with the increase occurring in the spring and autumn. The precipitation at El Paso is slightly lower with less rain during the summer months. The wind rose from available meteorological monitoring stations is presented in Figure 3. With the exception of the El Paso station, the prevailing wind for all of the stations appears to be from the southeast.

The proposed facility is within the Environmental Protection Agency (EPA) ecoregion, Chihuahuan Desert Grasslands. Chihuahuan Desert Grasslands are found in areas of fine-textured soils, such as silts and clays, which have a higher water retention capacity than coarse-textured, rocky soil. These grasslands are present in areas of somewhat higher annual precipitation (10–15 inches) than the Chihuahuan Basins and Playas ecoregion, such as elevated basins between mountain ranges, low mountain benches and plateau tops, and north-facing mountain slopes. In grassland areas with lower rainfall, areal coverage of grasses may be sparse, 10% or less. Some areas are now mostly shrubs as grasslands continue to decline due to erosion, drought, and climatic change. Typical grasses are black grama (Bouteloua eriopoda), blue grama (B. gracilis), sideoats grama (B. curtipendula), dropseeds (Sporobolus spp.), bush muhly

(Muhlenbergia porteri), and tobosagrass (Pleuraphis mutica), with scattered creosotebush (Larrea tridentata), prickly pear (Opuntia sp.), and cholla cacti (Cylindropuntia sp.).

Demographics

The facility is located in Eddy County, New Mexico approximately 10 miles west of the border with Lea County, New Mexico. According to the US Census Bureau, the population of Lea and Eddy Counties is 69,611 and 57,900, respectively. The majority of the population in Lea County is within the Hobbs and Lovington area. Over half of the population of Eddy County is within the Artesia and Carlsbad area. The nearest population center to the proposed site is Loving, approximately 14 miles to the southwest. The estimated population of this community is 1,100. The ambient impacts captured by 5ZS Hobbs Jefferson monitor (AQS Site ID: 35-025-0008) provide representative background concentrations for NO_2, PM_{10}, and $PM_{2.5}$ that meet the criteria found within the Ambient Monitoring Guidelines.

El Paso's population is approximately 840,000. The ambient impacts captured by El Paso Chamizal (AQS Site ID: 48-141-0044) provide a conservative estimate of monitored values due to higher populations.

Regulated Background Sources

The proposed project is expected to trigger PSD review for PM_{10}, $PM_{2.5}$, CO, NOx, and VOC. NOx and VOC will exceed 100 tpy, triggering the requirement for ozone preconstruction monitoring. Two monitors within the region located at Carlsbad and Hobbs monitor for all of the triggered pollutants with the exception of CO.

XTO is proposing to use existing background data in lieu of performing preconstruction monitoring. The facility is requesting that the following stations be determined to be representative of the project area. These stations are included in the New Mexico Air Quality Bureau Air Dispersion Modeling Guidelines, Revised February 7, 2019, and are suggested by the guideline for use in the area of the project.

Pollutant	Monitor Location	Monitor AQS ID
NO_2, O_3, PM_{10}, & $PM_{2.5}$	Hobbs, NM	35-025-0008
CO	El Paso, TX	48-141-0044

Surrounding existing monitors were evaluated to determine the representativeness of the project site. The EPA document "Ambient Monitoring Guidelines for PSD" (May 1987) indicates the maximum concentrations from sources occur within 10 km of the site. To support the determination that proposed monitors are representative of background concentrations near the proposed Husky CDP facility, the emissions inventories surrounding the proposed site and the monitoring locations were examined. The inventory was obtained using the permitted facilities list from the NMED website at https://www.env.nm.gov/wp-content/uploads/2019/07/Lat_Long_WEB_01_July_2019.xlsx . The surrounding CO monitor is located in El Paso, TX. The surrounding source inventory for this monitor was obtained from the EPA 2014 National Emissions Inventory (NEI). The emissions surrounding the project and the surrounding monitor locations are summarized in the Table 4 through Table 7 and depicted in Figure 2.

The emissions inventory surrounding the proposed Husky site is comparable with the Hobbs monitoring station for NOx and VOC. This similarity indicates that the Hobbs monitor would be representative of NO_2 and Ozone impacts surrounding the project. In addition to evaluating the surrounding inventory, the NOAA Hysplit Trajectory Model was run for each event comprising the design value for NO_2 and ozone. Backward trajectories for the date and time of the design values were run for the three current years: 2016, 2017, and 2018. These trajectories show the origin of the air parcels for the 24 hours preceding the event. The blue trajectory is at 0 meters, the red trajectory at 10 meters, and the green trajectory at 90 meters. The trajectories are shown in Figure 4 and Figure 5 and indicate that the Hobbs monitor captures the area surrounding the proposed project site and the monitor is representative.

Ozone and NO_2 are also monitored at the Carlsbad station. The emissions inventory within 10 km surrounding the Carlsbad monitor was approximately twice that of the proposed project site. Backward trajectory plots modeled for the ozone design value events are shown in Figure 6. These plots indicate that the wind path associated with the ozone design events were not from the area surrounding the proposed project. Likewise, Figure 7 depicts the backward trajectories for the NO_2 1-hr design events. Backward trajectories indicate that the project area does not contribute to the Carlsbad monitor design events for NO_2 and ozone.

For PM_{10}, there is an order of magnitude difference in the surrounding inventory between the Hobbs monitor and the proposed site. This difference is due to the location of two large mining facilities near the proposed site. The bulk of the emissions from the mining facilities are fugitive from haul roads and material handling. The impacts of these fugitive emissions would be near to the respective sources. All sources of PM_{10} and $PM_{2.5}$ within 10 km are required to be explicitly modeled and would account for these sources. Excluding these mining emissions, the surrounding PM_{10} inventory for the proposed site is 46 tpy versus 25.6 tpy for the inventory surrounding the Hobbs monitor. $PM_{2.5}$ was not included in the facility emissions inventory downloaded from the NMED website. $PM_{2.5}$ is a subset of PM_{10} and would likely be comparable as well. The comparable surrounding PM_{10} emissions inventory surrounding the project site and Hobbs monitor supports the selection of the Hobbs monitor as representative for PM_{10} and $PM_{2.5}$.

Hyspilt was used to determine the backward trajectory for the $PM_{2.5}$ 24-hr design events at the Hobbs monitor. The model was set to generate a new trajectory path each hour because the standard is a 24-hr average. The backward trajectory pathways shown in Figure 8 through Figure 10 indicate that emissions from the project area are included in the design events of two of the years. The Hysplit backward trajectory for $PM_{2.5}$ supports the selection of the Hobbs monitor as representative for PM_{10} and $PM_{2.5}$.

The CO surrounding monitor is not located in New Mexico and the surrounding inventory was obtained from the EPA 2014 NEI. The emissions inventory surrounding the monitor is comparable and indicates that the monitor would provide representative estimates of the air quality at the proposed project site.

Conclusion

The existing air quality monitoring conducted at 5ZS Hobbs Jefferson (AQS Site ID: 35-025-0008) is representative of the proposed project area and provides representative estimates of PM_{10}, $PM_{2.5}$, NO_x and ozone. The monitoring station is currently active for $PM_{2.5}$, NO_x and ozone. The PM_{10} monitoring data for the station is recent and is considered representative of the

project region. The monitor is within the same climate region, current monitoring data is available, and the design values at the monitors capture the region of the proposed project.

The existing CO monitor located at El Paso Chamizal (AQS Site ID: 48-141-0044) has similar emissions surrounding the monitor and provides representative monitoring for the region surrounding the proposed project.

Based on the analysis of this report, XTO submits that the proposed monitors comply with the requirements of the Ambient Monitoring Guidelines for PSD. The existing ambient monitoring program operated by NMED is sufficient to meet the needs of any pre-construction monitoring requirements and thus may be used in lieu of such pre-construction monitoring requirements.

Tables

Table 1 - Facility Wide Emission Rates Comparison to SERs of Table 2 of 20.2.74.502 NMAC

Pollutant	Significant Emission Rate (tpy)	XTO Proposed Emissions (tpy)	IS Facility below SER?
Carbon monoxide	100	235	No
Nitrogen oxides	40	260	No
Ozone (Volatile Organic Compounds or nitrogen oxides)	40 VOC 40 NOX	489	No
		260	No
Particulate Matter Total Suspended Particulate (TSP) PM10 emissions	 25 15	 183 177	 No No
Direct PM2.5 emissions	10	175	No
Secondary PM2.5 emissions	40 SO_2 40 NOX	51	No
		260	No
Sulfur compounds Hydrogen sulfide (H2S) Sulfur dioxide Sulfuric acid mist	 10 40 7	 0.0 51 15	 Yes No No

Table 2 - New Mexico Locations Climate Normals

Season	Hobbs				Carlsbad				WASTE ISOLT N PILOT PLANT			
	Precip (in)	Min Tmp (°F)	Avg Tmp (°F)	Max Tmp (°F)	Precip (in)	Min Tmp (°F)	Avg Tmp (°F)	Max Tmp (°F)	Precip (in)	Min Tmp (°F)	Avg Tmp (°F)	Max Tmp (°F)
Annual	17.92	48.2	62.7	77.2	13.67	48.2	63	77.7	13.98	48.4	63.4	78.3
Winter	2.32	30.7	44.8	58.9	1.56	30.1	44.7	59.4	1.7	30.2	45.1	60.1
Summer	6.57	65.8	79.9	93.9	5.58	66.5	80.6	94.6	6.13	66.9	80.7	94.5
Spring	4.14	47.2	63.1	79	2.53	47.6	63.5	79.4	2.38	47.4	63.8	80.1
Autumn	4.89	48.9	62.8	76.8	4	48.3	62.7	77.2	3.77	48.9	63.5	78.1

Table 3 - El Paso, TX Climate Normals

Season	Precip (in)	Min Tmp (°F)	Avg Tmp (°F)	Max Tmp (°F)
Annual	9.71	51.7	64.6	77.5
Winter	1.64	34	46.6	59.2
Summer	4.5	69.5	81.9	94.2
Spring	0.96	51.2	65.1	78.9
Autumn	2.61	51.8	64.6	77.3

Source for Tables 2 & 3: https://www.ncdc.noaa.gov/cdo-web/datatools/normals

Table 4 - Emission Inventory within 10 km of Project Site (TPY)

Industry	CO	NO2	PM_{10}	VOC	SO_2
O&G-Production Facility	1.7	1.2		4.2	
MINING-Mill Facility	411.74	141.67	466.78	7	1.7
O&G-Tank Battery/Bulk Fuel Storage	291.14	155.5	10.4	779.5	0.41
O&G-Compressor Station	641.22	447.75	41.83	388.37	87.36
Totals	**1345.8**	**746.12**	**519.01**	**1179.07**	**89.47**

Table 5 - Emissions Inventory within 10 km of Carlsbad Monitor (TPY).

Industry	CO	NO_2	PM_{10}	VOC	SO_2
O&G-Compressor Station	211.55	238.09	1.12	159.3	1.44
CON-Concrete Batch Plant	190	190	1.6	190	100
CON-Materials	2.5	69.9	13.4	0.6	5.8
MFG-Machine Shop	1.7	2.3	9.1	16.3	
MINING-Screening Plant	95	95		95	50
O&G-Reinjection Facility	7.54	4.52	4.46	42.4	
O&G-Production Facility	439.396	355.393	35.536	1027.344	0.22
O&G-Tank Battery/Bulk Fuel Storage	143.38	135.94	13.23	411.17	2.19
MINING-Rock Crusher	42.414	120.542	86.507	8.551	5.046
Totals	**1133.48**	**1211.685**	**164.953**	**1950.665**	**164.696**

Table 6 - Emissions Inventory within 10 km of Hobbs Monitor (TPY)

Industry	CO	NO2	PM_{10}	VOC	SO_2
CON-Asphalt Plant	95	95		95	50
O&G-Tank Battery/Bulk Fuel Storage	2.32	0.686		143.12	6.59
CON-Concrete Batch Plant	380	380	11.8	380	200
CON-Materials	15.26	32.9	2.97		
O&G-Reinjection Facility	118.8	74.9	0.4	150.6	321.6
MFG-Chemical	1.1	1.3		55.6	
O&G-Loading/Unloading Rack				64.8	
O&G-Production Facility	95	95		177.7	50
O&G-Compressor Station				23.4	
DIST-Chemical			10.4		
Totals	**707.48**	**679.786**	**25.57**	**1090.22**	**628.19**

Source Tables 3 to 5: https://www.env.nm.gov/wp-content/uploads/2019/07/Lat_Long_WEB_01_July_2019.xlsx

Table 7 - Emissions Inventory within 10 km of El Paso Monitor (TPY)

Industry	CO	NO2	PM_{10}	VOC	SO_2
Airport	525.74	215.21	11.7	51.64	23.48
Electricity Generation via Combustion	99.69	921.3	26.64	27.3	
Military Base	30.57	44.05	12.68	51.68	
Petroleum Refinery	175.8	439.76	157.07	646.52	100.06
Petroleum Storage Facility				40.12	
Primary Copper Smelting/Refining Plant	97.4	44.62	23.74		23.57
Rail Yard	36.75	316.9		14.43	
Unspecified		52.34		13.39	57.97
Totals	**965.95**	**2034.18**	**231.83**	**845.08**	**205.08**

Source: US EPA 2014 National Emissions Inventory

Table 8 - Proposed Existing Monitoring for CO

Monitor	Year	CO 1-hr 2nd Max (ppm)	CO 8-hr 2nd Max (ppm)
El Paso, TX	2018	4.9	3.7
	2017	4.2	2.9
	2016	3.2	2
Average		4.1	2.9

Source: EPA AirData Air Quality Monitors

Table 9 - Proposed Existing Monitoring for NO2, O3, PM_{10} & $PM_{2.5}$

Monitor	Year	NO_2 98th %ile (ppb)	NO_2 Annual Mean (ppb)	O_3 1-hr 2nd Max (ppm)	O_3 8-hr 4th Max (ppm)	$PM_{2.5}$ 98th %ile (ug/m^3)	$PM_{2.5}$ Wtd. Mean (ug/m^3)	PM_{10} 24-hr 2nd Max (ug/m^3)
Hobbs, NM	2018	36	5	0.09	0.076	18	8	.
	2017	32	4	0.08	0.069	17	9	.
	2016	33	4	0.07	0.065	12	5.9	.
	2014							30
	2013							47
	2012							37
Average		33.7	4.3	0.08	0.07	16	7.6	38

Source: EPA AirData Air Quality Monitors

$PM_{2.5}$ 2017 source https://www.epa.gov/air-trends/air-quality-design-values#report

Figures

Figure 1 - Husky CDP Air Quality Related Locations

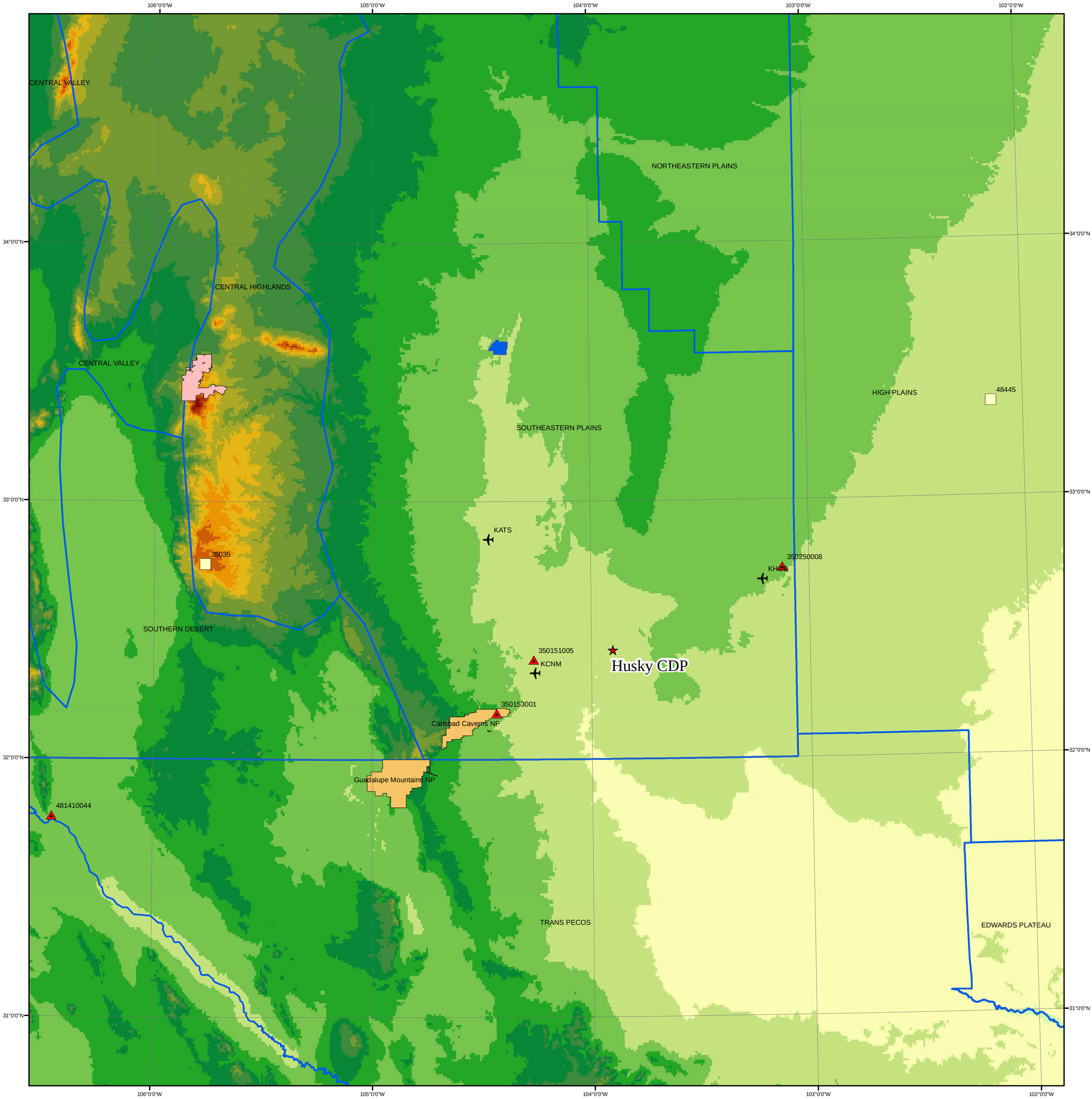

Legend

- MERPs
- Monitors
- NWS
- USFS Class I
- NPS Class I
- FWS Class I
- Climate Divsions

1:1,100,000

0 5 10 20 30 40 Miles



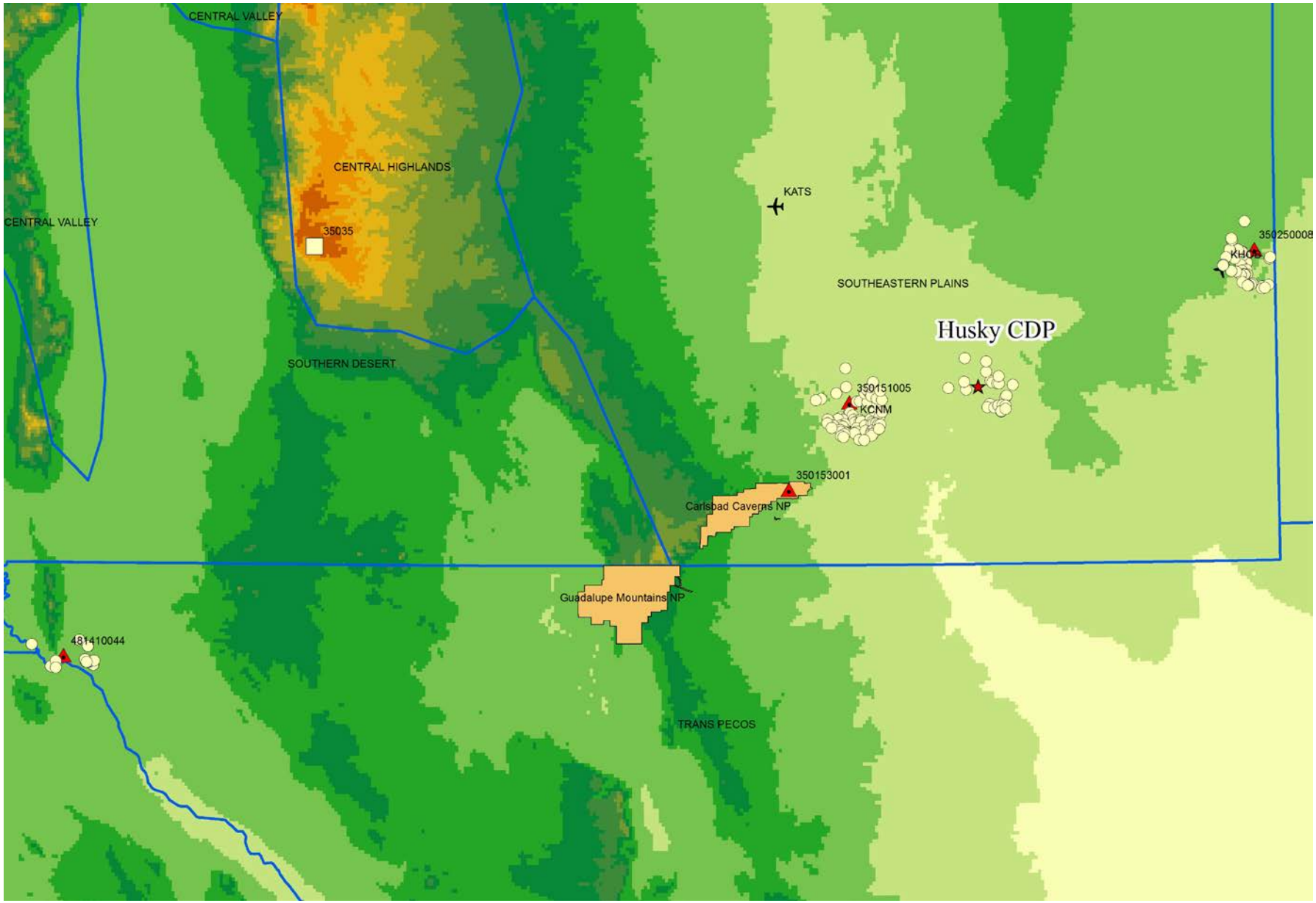

Figure 2 - Sources within 10 km of Project or Monitor Location

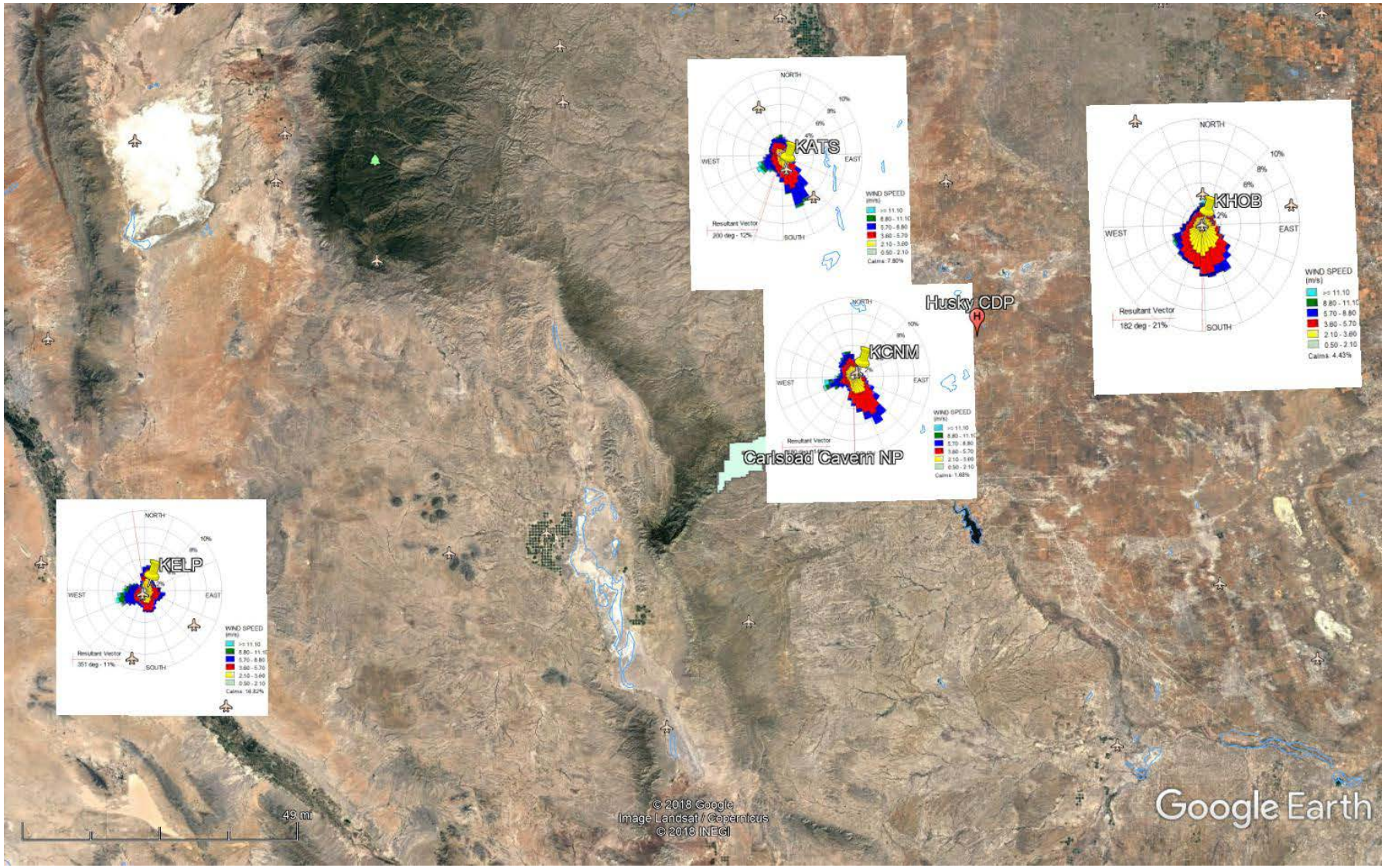

Figure 3 - Wind Rose from Surrounding NWS stations.

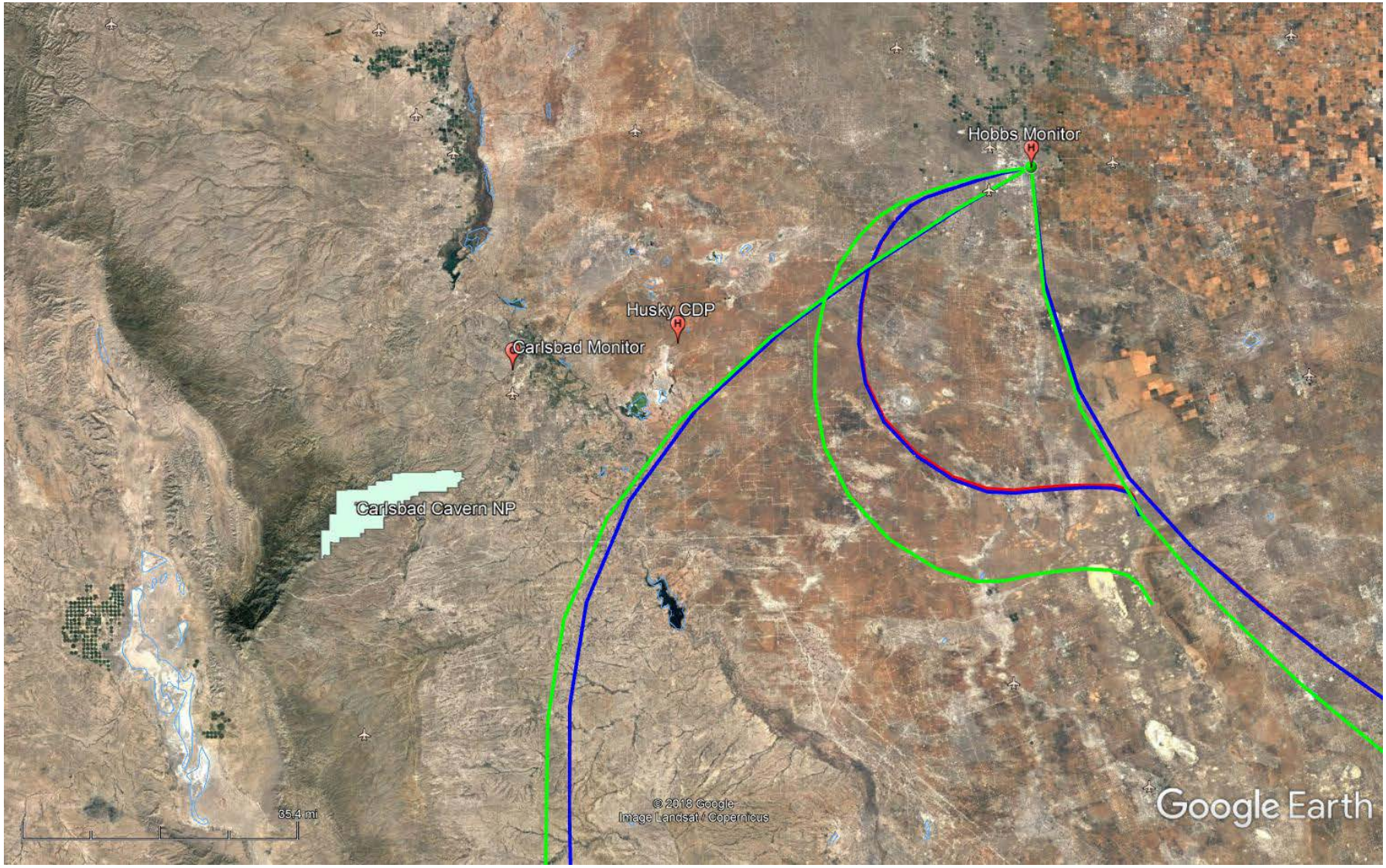

Figure 4 - Hysplit Backwards Trajectory for Ozone 8-hr Design Value Events at Hobbs Monitoring Station

Trajectory Start Times: 6-15-16 18:00 UTC, 9-12-17 17:00 UTC, 8-1-18 16:00 UTC

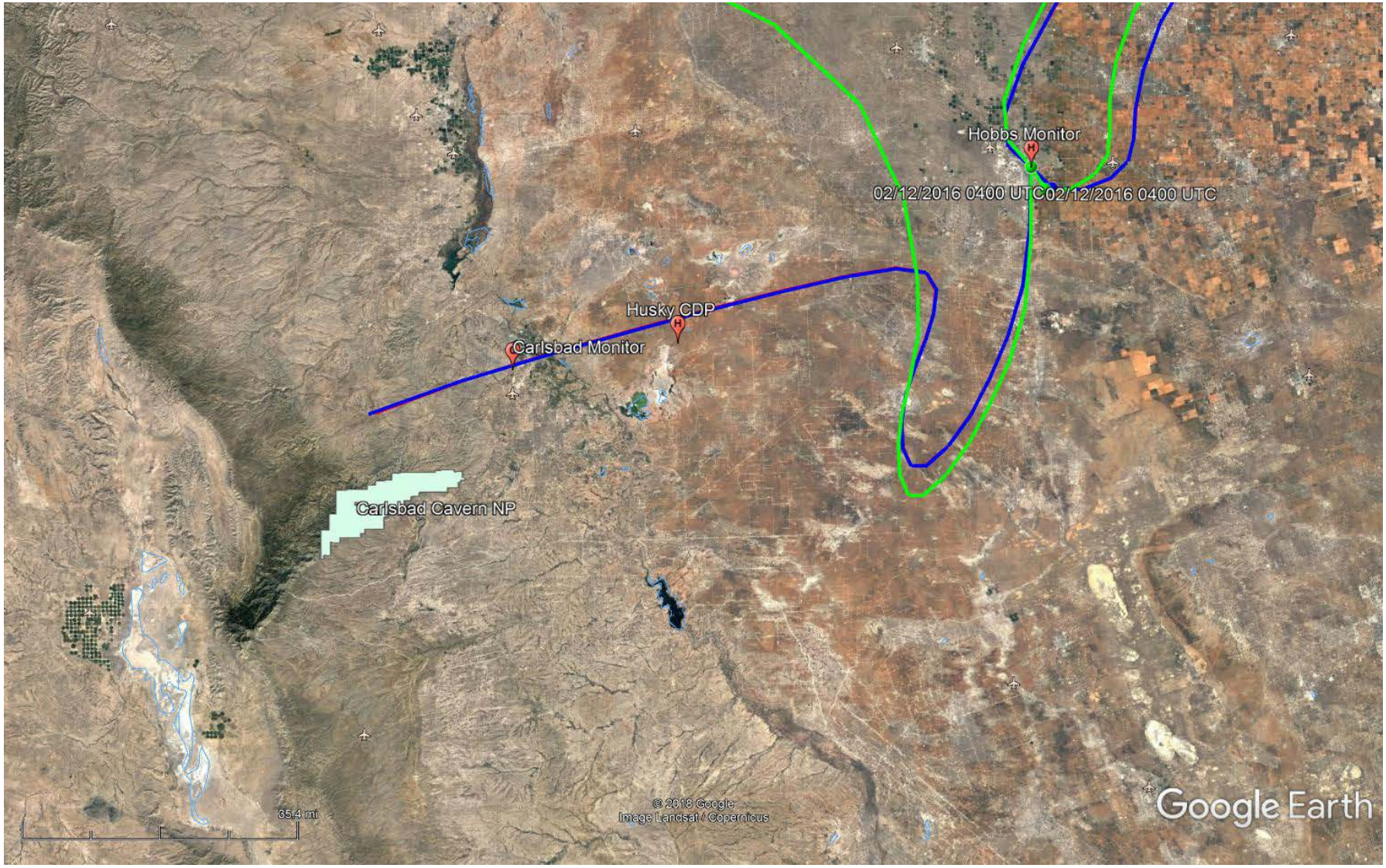

Figure 5 - Hysplit Backward Trajectories for NO2 1-hr Design Events at Hobbs Monitoring Station

Trajectory Start Times: 6-1-18 3:00 UTC, 12-8-17 1:00 UTC, 2-12-16 5:00 UTC

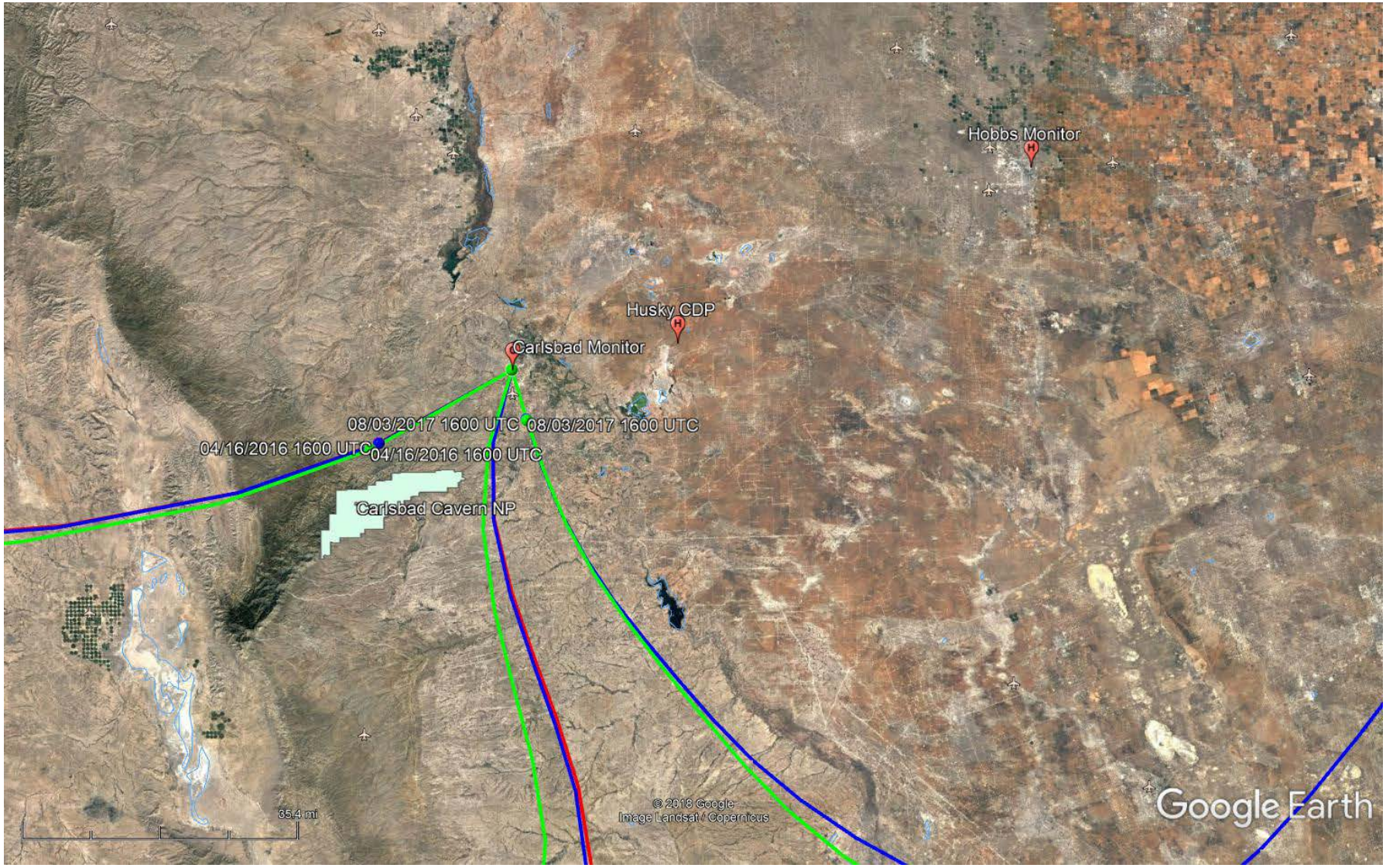

Figure 6- Hysplit Backwards Trajectory for Ozone 8-hr Design Value Events at Carlsbad Monitoring Station

Trajectory Start Times: 8-3-2018 17:00 UTC, 8-3-2017 17:00 UTC, 4-16-2016 17:00 UTC

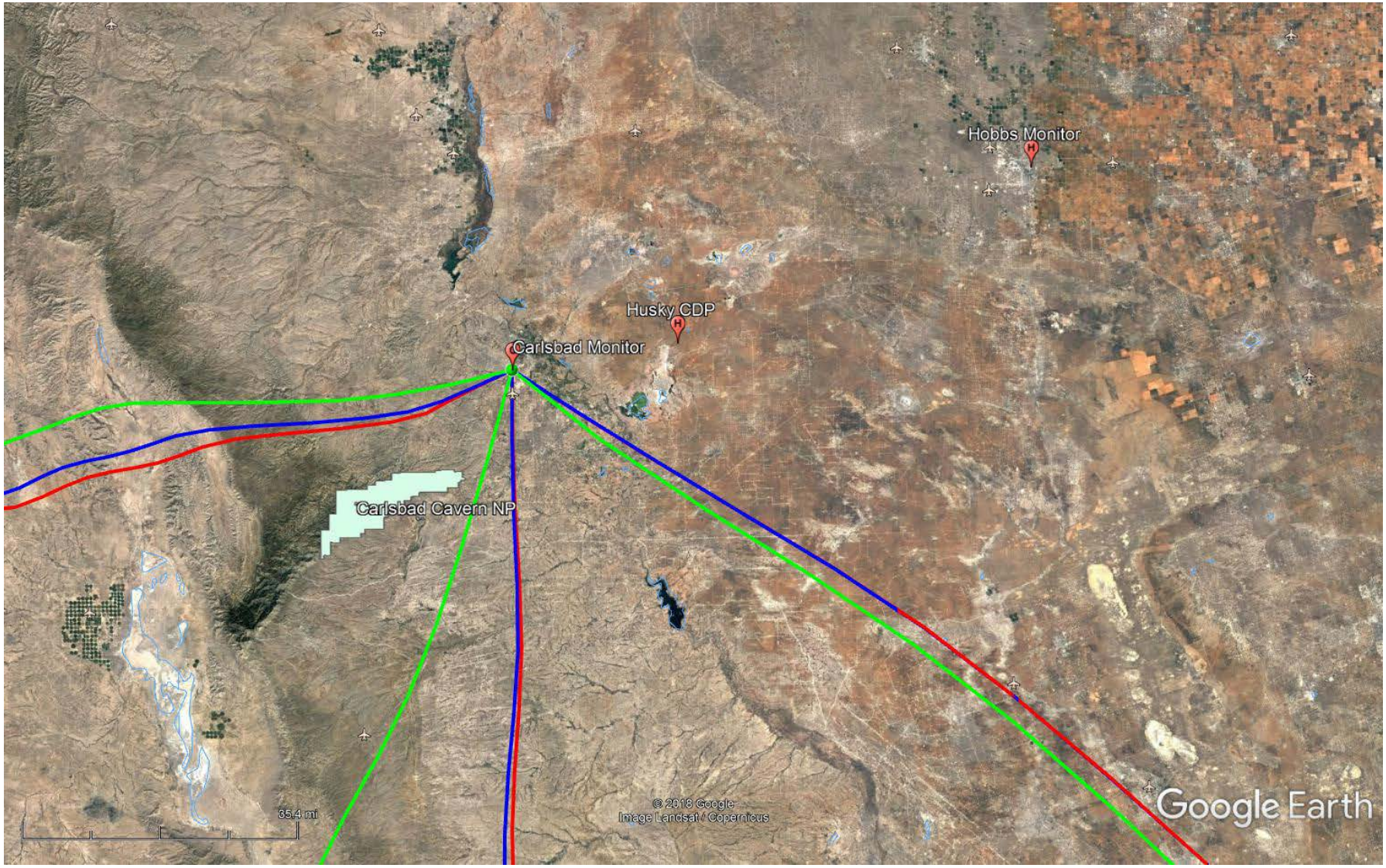

Figure 7 - Hysplit Backward Trajectories for NO2 1-hr Design Events at Carlsbad Monitoring Station

Trajectory Start Times: 2-13-2018 7:00 UTC, 12-16-2017 11:00 UTC, 1/14/2016 15:00 UTC

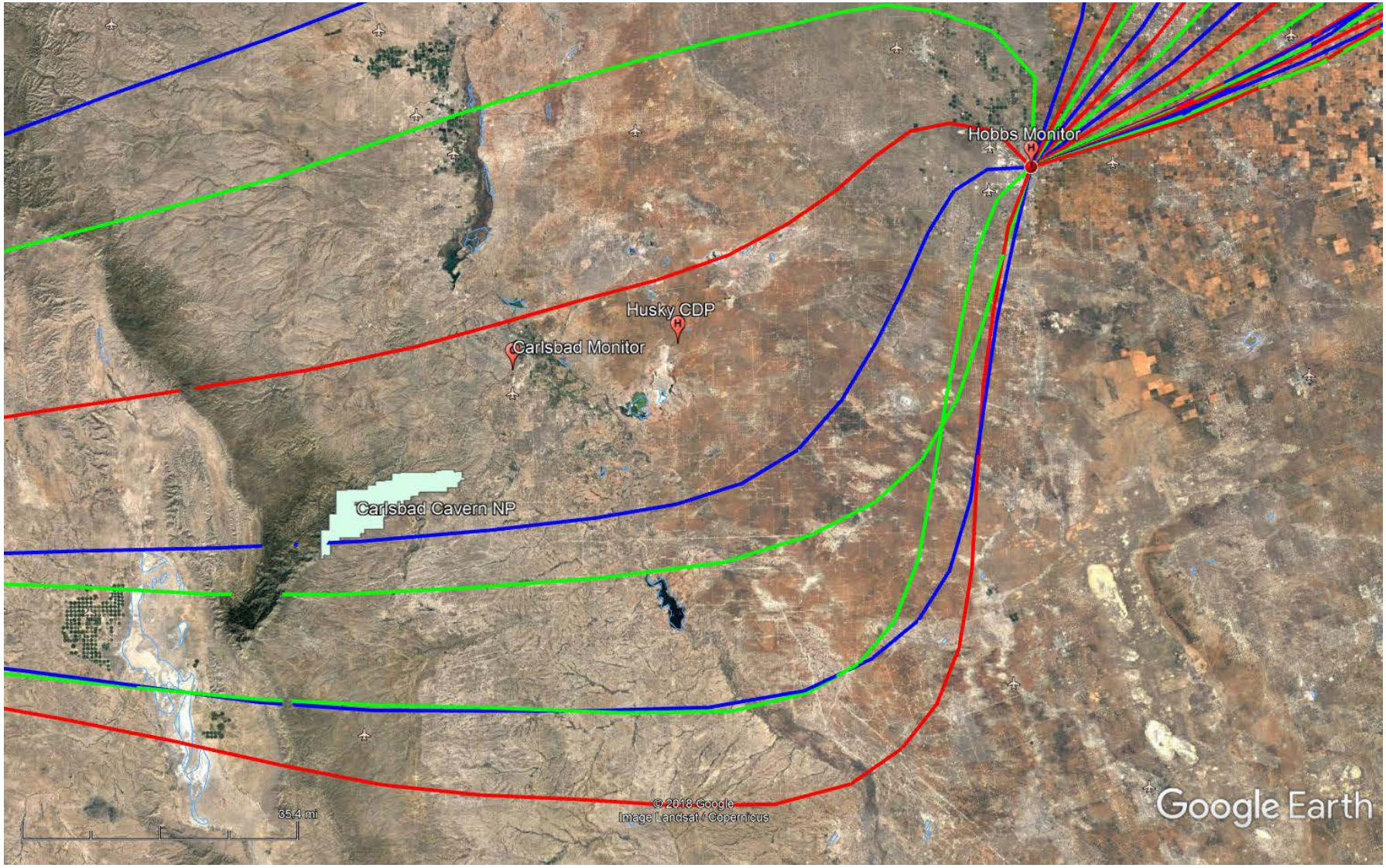

Figure 8 - Backwards Trajectory PM2.5 Design Event Hobbs Monitor 6-3-2018 7:00 UTC

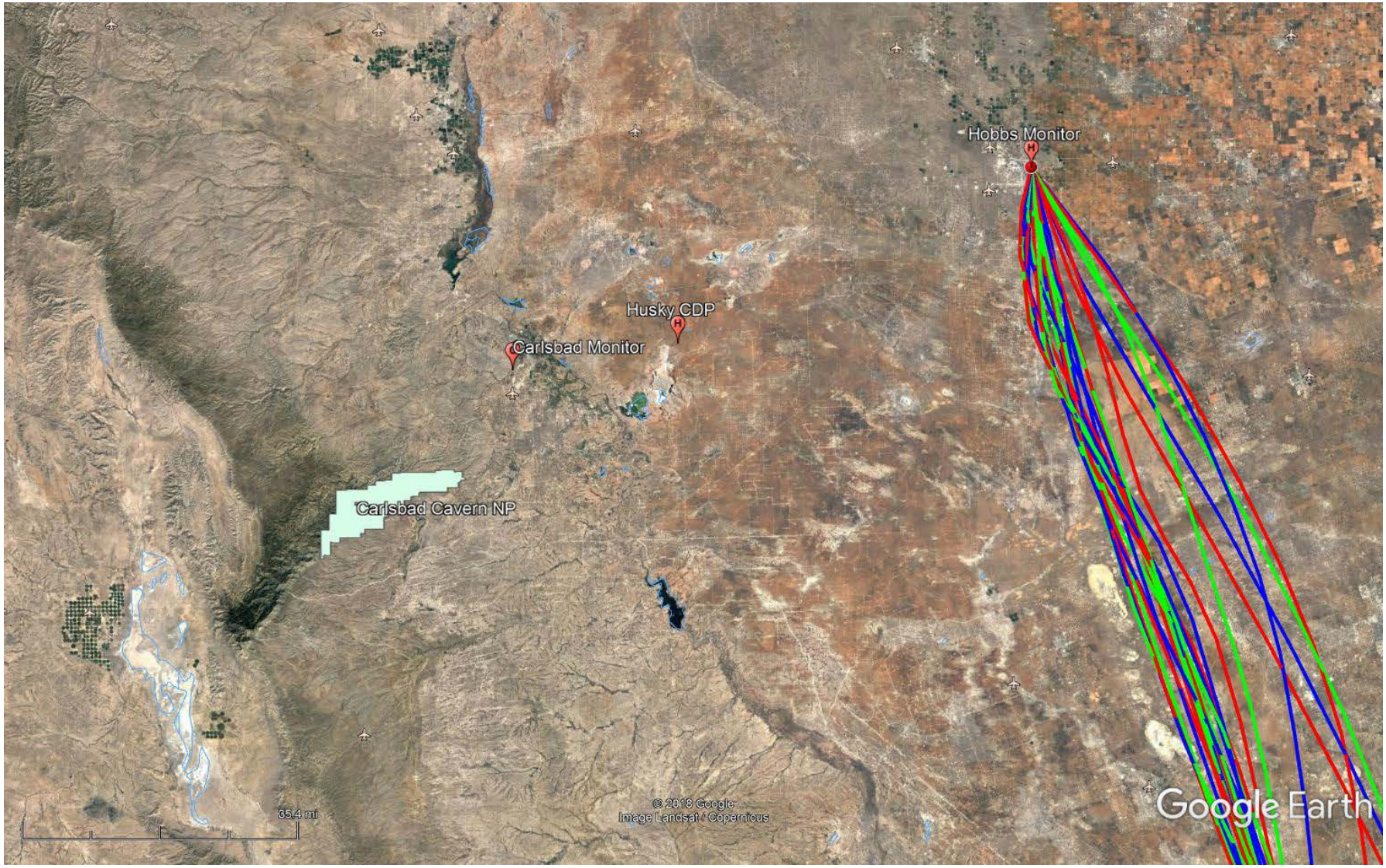

Figure 9-Backwards Trajectory PM2.5 Design Event Hobbs Monitor 6-15-2017 7:00 UTC

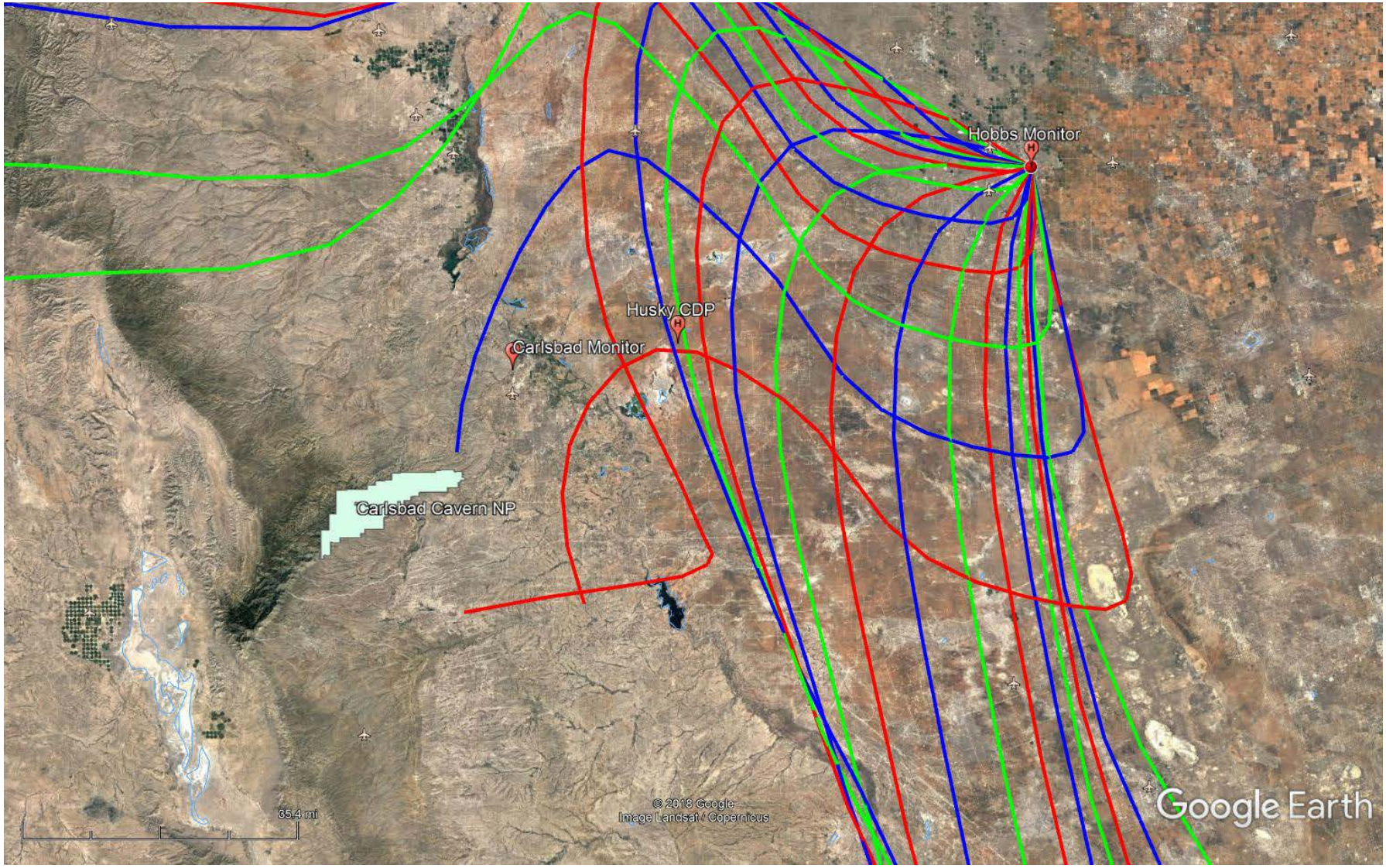

Figure 10-Backwards Trajectory PM2.5 Design Event Hobbs Monitor 6-18-2016 7:00 UTC

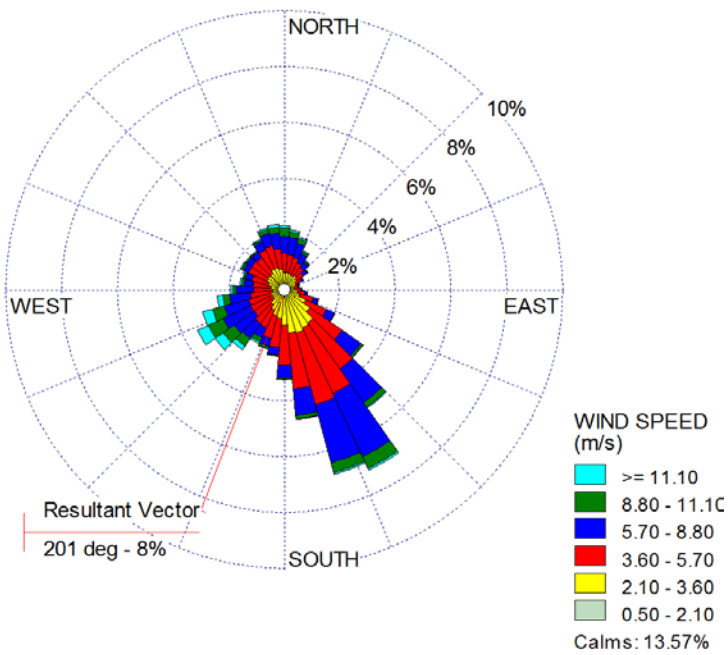

Figure 11 - Aertesia Wind Rose 2014-2018

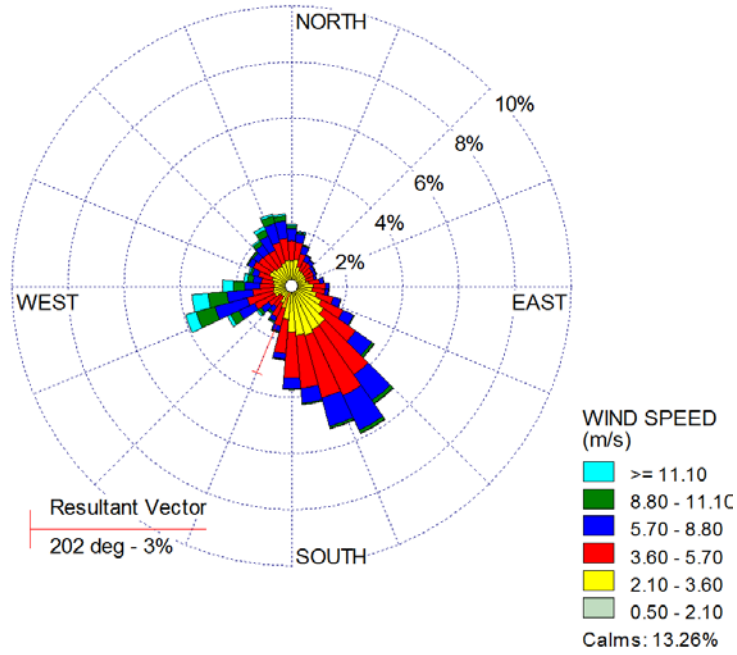

Figure 12 - Carlsbad Wind Rose 2014-2018

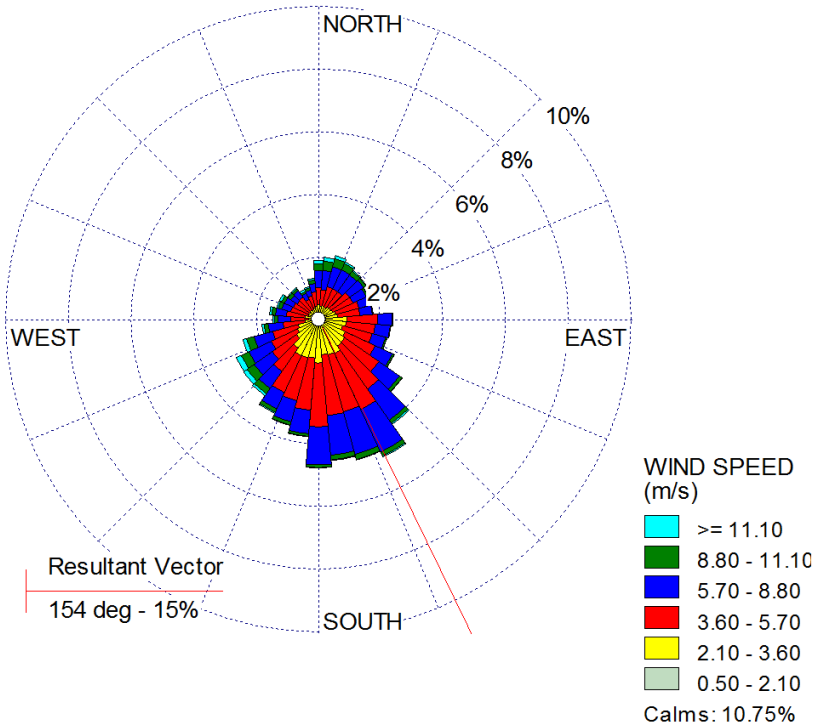

Figure 13 - Hobbs Wind Rose 2014-2018

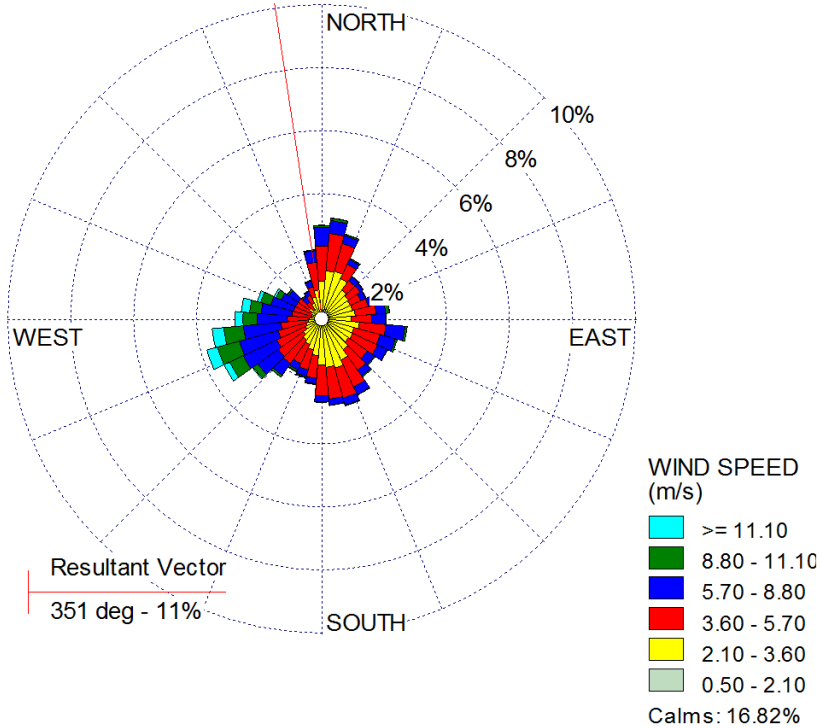

Figure 14 - El Paso Wind Rose 2014-2018

Attachment B – Modeling Protocol



Modeling Protocol

XTO Energy Inc. - Husky CDP

Eddy County, New Mexico

September 24, 2019

TABLE OF CONTENTS

1 Summary....1
2 Choice of Models....1
3 Model Input Options....1
4 Terrain classification (flat or simple and complex):....2
5 Receptor Grids....2
6 Source Inventory Data....2
7 Minor Source Baseline Dates for Modeling Increment Consumption....2
8 Nearby Class I Areas....2
9 Appropriate Meteorological Data....3
10 Background Concentrations....3
11 Setback Distance for a Portable Fugitive Source....4
12 Any Possible Sources of Disagreement....4
12.1 Source Scenarios....4
12.2 Preconstruction Monitoring....5
12.3 Cumulative Analysis Receptors....5
12.4 Air Toxics Modeling....5
12.5 Modeled Emission Rates for Precursors (MERPs)....5
12.5.1 Identify Representative Source....6
12.5.2 Acquire the source characteristics and associated modeling results....8
12.5.3 Ozone Impacts....9
12.5.4 Daily $PM_{2.5}$....9
12.5.5 Annual PM2.5....9
12.6 PSD Additional Impacts Analysis....9
12.6.1 Growth Analysis....9
12.6.2 Soil and Vegetation Analysis....9
12.6.3 Visibility....9
12.6.4 PSD Class I Impacts....10

Tables

Table 1 - Facility Wide Emission Rates Comparison to SERs of Table 2 of 20.2.74.502 NMAC....12
Table 2 - Background, Air Quality Standards, and Significance Levels....12
Table 3 - Proposed CO Background Values....13
Table 4 - Proposed NO_2, PM_{10} & $PM_{2.5}$ Background Values....13
Table 5 - Major Source Baseline Dates....13
Table 6 - Class I Areas within 300 km of Project Site....13
Table 7 - Climate Stations Surrounding Hypothetical MERP Site....14
Table 8 - Climate Stations within 50 Kilometers of Husky CDP....15
Table 9 - 2014 NEI Point Sources within 50 km of Proposed Site and Hypothetical Sources....16
Table 10 - County Nonpoint Source Emissions....17

Figures

Figure 1 - Air Quality Related Locations....19
Figure 2 - Wind Rose from Surrounding NWS stations....20
Figure 3 - Artesia Wind Rose 2011-2015....21
Figure 4 - Carlsbad Wind Rose 2013-2017....21
Figure 5 - Artesia Wind Distribution 2011-2015....22
Figure 6 - Carlsbad Wind Distribution 2013-2017....22
Figure 7 - Land Use Surrounding Project Site and Hypothetical Site....23
Figure 8 - 50 km Radius Location within Counties....24
Figure 9 – Climate Division Composit Temperture (F)....25
Figure 10 – Climate Division Composite Tmax (F)....25
Figure 11 – Climate Division Composite Tmin (F)....26
Figure 12 –Climate Division Composite Precipitation (in)....26

1 SUMMARY

XTO Energy is proposing to construct a natural gas processing and central delivery point located approximately 13.9 miles NE of Loving, NM in Eddy County. The location of the proposed facility is shown in Figure 1 in relation to: topographical features, Class I Areas, nearby National Weather Service (NWS) meteorological stations, air quality monitoring locations and EPA hypothetical photochemical modeling locations.

Process equipment at this facility is anticipated to consist of the following point source emissions: natural gas fired turbines, stabilization heaters, cryogenic heaters, amine regenerator heaters, thermal oxidizers, combustors, and emergency flares. Facility tank sources will include: internal floating roof oil tanks, fixed roof oil tanks, fixed roof produced water tanks, a gun barrel tank, a slop oil tank, and loading operations. Table 1 references the anticipated facility wide emissions compared to Significant Emission Rates of Table 2 of 20.2.74.502 NMAC.

The NMED Air Dispersion Modeling Guidelines require a modeling protocol to be submitted for PSD applications. This protocol addresses the PSD ambient air quality analysis as well as the state modeling requirements. The protocol outline follows the topics listed in Section 6.1 of the NMED Modeling Guideline.

XTO is proposing the use of hypothetical modeling performed by EPA and included in the "Guidance on the Development of Modeled Emission Rates for Precursors (MERPs) as a Tier 1 Demonstration Tool for Ozone and $PM_{2.5}$ under the PSD Permitting Program." The facility requests approval of the use of the hypothetical source as discussed in the protocol.

2 CHOICE OF MODELS

The approved regulatory model AERMOD (Version 18081) will be used to determine impacts in the near field (<50km) for compliance with the NAAQS and PSD increments. The model will be run with the third party vendor Lakes Environmental parallel processing.

Any requirements for near field visibility impacts will be assessed with the screening model VISCREEN and if screening results require, PLUVUE II.

The Federal Land Manager will be consulted to determine the appropriate model to be used to determine any long-range impacts, if required.

3 MODEL INPUT OPTIONS

AERMOD will be executed with the default regulatory options by using the secondary keyword "DFAULT" on the MODELOPT input to ensure that the model is executed with the default regulatory options. NO_2 modeling will be performed using ARM2 with the default minimum and maximum ambient rations of 0.5 and 0.9, respectively. The ARM2 method, however, will only be applied to model runs which include equipment that can operate simultaneously.

4 TERRAIN CLASSIFICATION (FLAT OR SIMPLE AND COMPLEX):

The default elevated terrain height option will be used. Terrain within 50 km of the proposed site ranges from 866 meters to 1285 meters with the site location at 960 meters.

5 RECEPTOR GRIDS

Receptors will be processed with the current AERMAP Version (18081) to assign elevations and hill heights. DEM data used to process the terrain heights will be downloaded through the third party Lakes Environmental Graphical User Interface at http://www.webgis.com/. Receptors will be placed from the facility center as follows:

- 0 km – 50 meter spacing
- 1-2 km – 100 meter spacing
- 2-4 km – 250 meter spacing
- 4-6 km – 500 meter spacing
- up to 50 km – 1 km spacing

6 SOURCE INVENTORY DATA

The facility will be modeled as presented on Forms 2-E and 2-H of the application. Off-site sources will be modeled as contained in surrounding source inventories provided by NMED. The surrounding source inventory was provided May 14, 2019, via email from Eric Peters. Surrounding sources will be represented by the monitored background for the CO and NO_2 analyses. For the remaining pollutant standards, the surrounding sources will be explicitly modeled as outlined in the NMED Guideline.

7 MINOR SOURCE BASELINE DATES FOR MODELING INCREMENT CONSUMPTION

The proposed project is located in the Pecos Permian Basin Air Quality Control Region (AQCR) 155. The minor source baseline date has been set for all of the pollutants with PSD increments. The minor source baseline dates are listed in Table 5. The increment consumption in the area will be determined for each pollutant listed.

8 NEARBY CLASS I AREAS

The Federal Land Manager for each Class I Area within 300 km of the project site will be contacted to determine any requested analysis for Air Quality Related Values (AQRVs). The nearest Class I Area is Carlsbad Caverns at approximately 51 km. Also within 300 km are the Guadalupe Mountains, Salt Creek

Wilderness, and White Mountains Class I Areas. The distance to these Class I Areas is listed in Table 6 and depicted in Figure 1.

The Q/D for each Class I Area will be determined, where Q is the maximum allowable 24-hour emissions of NOx, SOx, $PM_{10,}$ and H_2SO_4 (expressed in tons/yr), and D is the distance to the Class I Area in kilometers. For Class I Areas with a Q/D value less than or equal to 10, no adverse impact will be presumed.

Compliance with the Class I increment will be demonstrated using the Class II analysis by placing receptors at 50 km from the facility using a polar grid spaced at 0.5 degree intervals from the 235 degree azimuth to the 250 degree azimuth. This is the direction of the closest Class I areas; Carlsbad Caverns and the Guadalupe Mountains. The maximum modeled impact will be compared to the Class I SIL. The maximum $PM_{2.5}$ impact at this distance will be added to the secondary $PM_{2.5}$ determined using MERPs and compared to the Class I SIL.

9 APPROPRIATE METEOROLOGICAL DATA

The Appendix W guideline states the use of 5 years of adequately representative National Weather Surface (NWS) or comparable meteorological data, at least 1 year of site-specific, or at least 3 years of prognostic meteorological data, are required. In the absence of actual on-site data, the NMED may approve the use of off-site data that the NMED believes mimics on-site data for that location.

The proposed project is located in the Southeastern Plains climatological region as shown in Figure 1. There are three NWS stations located in the region of the project area in the same climatological region: Hobbs (KHOB), Carlsbad (KCNM), and Artesia (KATS). The wind rose for these stations along with two stations located in Texas are shown on Figure 2. With the exception of the Pecos, Texas station, the prevailing wind for all of the stations appears to be from the southeast. Both the Artesia site and Carlsbad site are located within the same terrain feature and would be appropriate for use at the proposed site. The wind rose and wind distribution for Artesia and Carlsbad are shown in Figure 3 through Figure 6. The Carlsbad site has fewer reported calms and is closer to the project site at 22 miles versus the distance to Artesia of 45 miles. Evaluation of the Carlsbad and Artesia meteorological datasets indicate that the Carlsbad data results in higher modeled impacts. In addition the Carlsbad meteorological station is located between the Carlsbad Caverns Class I area and the project site.

The Carlsbad met data for the years 2013 through 2017 is available on the NMED website. The data for the years 2013, 2014, 2016 and 2017 appear to have been processed with turbulence data and the ADJ_U* option, a non-default option. The 2015 year, however, was not processed with the turbulence data and ADJ_U*. It is proposed that the NMED approve the off-site data at Carlsbad for use at the project site. It is proposed that the one-year dataset of 2015 be approved for use in the project modeling.

10 BACKGROUND CONCENTRATIONS

Preconstruction monitoring is required for pollutants undergoing PSD review unless a waiver is obtained or existing monitoring is determined to be representative of the project area. A waiver can be granted under NMAC 20.2.74.306.H. if modeled impacts are below the significant monitoring concentration. It is anticipated that modeled impacts for SO_2, NO_2, and CO will be below the significant monitoring

concentration. A waiver for SO2 monitoring will be requested based on impacts less than the significant monitoring concentration. Under NMAC 20.2.74.306.C(2), the NMED has the discretion to accept existing monitoring data in lieu of preconstruction monitoring if it is determined that the existing monitoring is representative of the air quality in the area. The facility is submitting a request, apart from this protocol, that the following stations be determined to be representative of the project area in lieu of conducting preconstruction monitoring.

Pollutant	Monitor Location	Monitor AQS ID
NO_2, O_3, PM_{10}, & $PM_{2.5}$	Hobbs, NM	35-025-0008
CO	El Paso, TX	48-141-0044

If required in the analysis, the facility proposes to use the SO_2 inventory provided by the NMED. For the remaining pollutants, the proposed background value is the most recent three-year average monitored at the proposed stations presented in Table 3 and Table 4. Table 2 summarizes the background with the air quality standards and significance levels. Note the facility will have insignificant ozone impacts using the proposed MERP Tier 1 demonstration proposed below.

11 Setback Distance for a Portable Fugitive Source

This section is not applicable since the source is not portable

12 Any Possible Sources of Disagreement

The modeling procedures will follow the New Mexico Air Quality Bureau Air Dispersion Modeling Guidelines, Revised June 6, 2019. The items listed below may not be specifically addressed in the guideline or may be listed for clarification of the interpretation of the guideline.

12.1 Source Scenarios

Two scenarios will be included in the permit application. One scenario will include four natural gas fired turbines and a reduced number of heaters and flares. Equipment to be operated simultaneously will be included on separate UA2 Forms 2-E and 2-H for the scenario, i.e., '2-E' and '2-E No Cogen'. The scenarios will be modeled as presented on the forms 2-E and 2-H.

All of the equipment will be included in one model run and assigned to source groups; 'Cogen' for the scenario with turbines and 'NoCogen' for the scenario without turbines. NOx modeling will assume full conversion for the modeled scenarios. Should the ambient ratio method be required to estimate the conversion of NOx to NO2, the scenario producing the highest impacts will be modeled in a separate modeling run with the ARM2 method employed so that only sources which emit concurrently are included.

In addition to the scenario source groups, the source group 'All' will be used to determine the impacts of all of the sources emitting together. The 'All' source group will provide worst case impacts for transient operating conditions that may require different combinations of equipment represented by the source

groups ‘Cogen’ and ‘NoCogen’. This will cover situations, for example, where a turbine is out of service and additional heaters need to be put into service to supply heat that would otherwise be supplied by the turbine that is inoperable. The source group ‘All’ will only be used for determination of worst case impacts and will not be a permitted operating scenario, i.e., if all of the equipment operating together has acceptable impacts then subsets of the equipment will also have acceptable impacts.

12.2 Preconstruction Monitoring

The facility requests the NMED accept the existing monitoring stations in lieu of preconstruction monitoring. This has been submitted as a separate request.

12.3 Cumulative Analysis Receptors

Receptors with ambient impacts determined in the preliminary analysis to be less than the significant impact level will not be included in the cumulative analysis. Only receptors with project impacts (primary plus secondary) above the SIL will be used in the cumulative analysis.

12.4 Air Toxics Modeling

The facility will have emissions of sulfuric acid mist and ammonia. Sources may choose to use a correction factor for the release height of emissions for the purpose of determining whether a permit is necessary for the emission of a toxic air pollutant. XTO proposes to use the correction factor prior to comparison to the air toxics emissions thresholds specified in 20.2.72.502 NMAC - Permits for Toxic Air Pollutants.

12.5 Modeled Emission Rates for Precursors (MERPs)

The EPA document “Guidance on the Development of Modeled Emission Rates for Precursors (MERPs) as a Tier 1 Demonstration Tool for Ozone and $PM_{2.5}$ under the PSD Permitting Program” provides procedures to demonstrate secondary $PM_{2.5}$ and ozone based on technically credible air quality modeling performed to relate precursor emissions and peak secondary pollutant impacts from specific or hypothetical sources

EPA guidance lists a three step process for applicants to determine impacts for precursors: 1) Identify a representative hypothetical source from EPA’s modeling results, 2) acquire the source characteristics and associated modeling results for the hypothetical source(s) and 3) apply the source characteristics and photochemical modeling results with the appropriate SIL to the MERP equation for comparison with the project emission rate.

The document “Final MERPs Guidance Webinar, June 13, 2019” posted on the EPA SCRAM website lists an example application of the MERPs guidance. The first step in the EPA example is to select the most conservative MERP values from the Climate Zone. The most conservative MERPs in the Southwest climate zone in the EPA spreadsheet “illustrative_merps_epa_modeling_2018dec28version.xlsx” are as follows:

METRIC	PRECURSOR	POLL	State	County	FIPS	EMISSIONS	STACKHEIGHT	CONC	MERP	LATITUDE	LONGITUDE	CZ	CZNAME	terravg	urbmax	DOMAIN	SOURCE
MDA8	VOC	OZONE	Utah	Utah	49049	500	10	0.456	1097	40.1101	-111.9363	7	Southwest	1786	21.7	12WUS1	15
MDA8	NOX	OZONE	Arizona	Coconino	4005	500	10	2.446	204	35.4277	-111.2703	7	Southwest	1786	7.4	12US2	36
DAILY	NOX	NITRATE	Colorado	Weld	8123	500	10	0.092	6514	40.6215	-104.0374	7	Southwest	1460	6.2	12WUS1	3
ANNAVG	NOX	NITRATE	Colorado	Weld	8123	500	10	0.008	11960	40.6215	-104.0374	7	Southwest	1460	6.2	12WUS1	3
DAILY	SO2	SULFATE	Colorado	Weld	8123	500	10	0.398	1508	40.6215	-104.0374	7	Southwest	1460	6.2	12WUS1	3
ANNAVG	SO2	SULFATE	Colorado	Weld	8123	500	10	0.009	10884	40.6215	-104.0374	7	Southwest	1460	6.2	12WUS1	3

Examination of these worst case MERPs values indicates that the project NOx emissions would be above the worst case MERP for ozone formation. The second step in the EPA example is to screen the closest hypothetical sources to the project facility and select the worst case MERP. The EPA example did not define the number of sources to include in the closest hypothetical sources, however, the three closest sources were included in the example. The worst case MERPs for the three closest sources to the Husky CDP site were extracted from the EPA spreadsheet as follows:

METRIC	PRECURSOR	POLL	State	County	FIPS	EMISSIONS	STACKHEIGHT	CONC	MERP	LATITUDE	LONGITUDE	CZ	CZNAME	terravg	urbmax	DOMAIN	SOURCE
MDA8	VOC	OZONE	Texas	Terry	48445	500	10	0.032	15669	33.3688	-102.1459	6	South	1011	31.9	12WUS1	5
MDA8	NOX	OZONE	New Mexico	Otero	35035	500	10	1.209	414	32.7567	-105.7669	7	Southwest	1692	4.4	12WUS1	10
DAILY	NOX	NITRATE	Texas	Terry	48445	500	10	0.082	7331	33.3688	-102.1459	6	South	1011	31.9	12WUS1	5
ANNAVG	NOX	NITRATE	Texas	Terry	48445	500	10	0.004	26780	33.3688	-102.1459	6	South	1011	31.9	12WUS1	5
DAILY	SO2	SULFATE	Texas	Terry	48445	500	10	0.277	2170	33.3688	-102.1459	6	South	1011	31.9	12WUS1	5
ANNAVG	SO2	SULFATE	Texas	Terry	48445	500	10	0.004	25929	33.3688	-102.1459	6	South	1011	31.9	12WUS1	5

The Terry Count, Texas site was found to have the worst case MERP values for all pollutants with the exception of ozone formation from NOx. The value for the Terry County site; however, was almost identical to the worst case at 417 TPY vs the worst case of 414 TPY. The MERP values for the worst case nearby hypothetical source are proposed to be used to demonstrate the ozone and secondary $PM_{2.5}$ impacts.

The EPA example alludes that a comparison of the geographic areas is not required unless a site other than the worst case nearby hypothetical source is selected. The Terry County, Texas site was evaluated as described below.

12.5.1 Identify Representative Source

The MERP guidance document contains two hypothetical sources in the region of the proposed project: FIPS Nos. 35035 and 48445. These hypothetical sources are shown in Figure 1 and are within 120 miles of Husky CDP.

The MERPs guidance identifies information that could be used to describe the comparability of two different geographic areas as:

- average and peak temperatures
- humidity
- terrain
- rural or urban nature of the area
- nearby local and regional sources of pollutants and their emissions, and
- ambient concentrations of relevant pollutants where available

The Husky CDP is in the Southeastern Plains climate division. The hypothetical sources are in adjacent climate divisions to the east (High Plains) and west (Central Highlands). Figure 9 through Figure 12 show the climate composites for average temperature, maximum temperature, minimum temperature and average precipitation. The source located in Otero, NM receives similar rainfall but differs in the temperature categories. Additionally, the elevation of the source is approximately 2,000 meters higher than the Husky CDP elevation. The 2014 National Emissions inventory for sources within 50 km revealed only two sources; an airport, and landfill. The 2014 NEI point source emissions within 50 km of each site for NOx, SO_2, and VOC is summarized in Table 9. The Otero County hypothetical site was discounted based on the temperature difference, difference in elevation, and the difference in the surrounding source inventory.

The hypothetical source located in Terry County, TX (FIPS 48445) was evaluated and is proposed to be used to determine the ozone and secondary $PM_{2.5}$ impacts for Husky CDP. The Terry Co, TX hypothetical source is located approximately 120 miles northeast of Husky CDP. Although not in the same climate zone, the two locations are in adjacent climate divisions. The precipitation and temperature of the climate stations within 50 km of each site is presented in Table 7 and Table 8 showing the 1981-2010 climate normals. Annual average minimum and maximum temperatures at both sites range from the mid-40s to the mid-90s. Average annual rainfall at the Terry Co, TX site is approximately 6 inches higher than the Husky CDP site, with the majority of the difference occurring in the spring. The "NOAA Comparative Climatic Data for the United States Through 2018" lists relative humidity and temperature records. The closest site to Husky CDP listed in the publication is Roswell, NM. Data for Lubbock, TX is also included in the publication and is within the 50 km radius of the hypothetical site. The record high temperature at both sites is 114°F. The lowest temperature of record is -19 and -16 °F for Roswell and Lubbock, respectively. The annual average morning relative humidity is 58% and 74% for Roswell and Lubbock, respectively. The similarity of the climate conditions at the two sites support the use of the hypothetical site as representative.

The terrain within 50 km of the Terry Co, TX site ranges from approximately 880 meters to 1120 meters with a site elevation of 1000 meters. This is similar to the project site where terrain ranges from 866 meters to 1285 meters and a site elevation of 960 meters. The 2014 NEI was used to compare the surrounding emission sources between the two areas. Both areas had point source emissions of relative pollutants in the same order of magnitude as summarized in Table 9.

To evaluate the nonpoint source surrounding emissions, the 2014v7.1 platform based on the 2014 NEI version 2 was used. The data is not associated with coordinates and county data was used for the evaluation. The Husky CDP 50 km area falls within Lea and Eddy County, New Mexico. The 50 km area for the Terry County site falls within Terry, Lynn, Hockley, and Lubbock County, TX. The location of these areas in respect to the county borders is shown in Figure 8. The nonpoint source emissions for the counties is shown in Table 10. The area of the New Mexico counties is twice that of the Texas counties. In considering the size difference, the emissions are comparable with the exception of ammonia and VOC. The majority of the ammonia difference is the larger nonpoint agricultural emissions in the Texas counties. Given the warm climate surrounding the two sites it is expected that the NOx $PM_{2.5}$ MERP for Terry Co, TX would be conservative for the Husky CDP site and NOx changes around the Husky CDP would result in less change in the ambient ammonium nitrate. Methane is included in the NEI data. As stated in the support document, Technical Support Document (TSD) Preparation of Emissions Inventories for the Version 7.1 2014 Emissions Modeling Platform for the National Air Toxics Assessment, *"Technically, CH4 is not a VOC but part of TOG. Although emissions of CH4 are derived, the AQ models do not use these emissions because the anthropogenic emissions are dwarfed by the CH4 already in the atmosphere."* Discounting the nonpoint oil and gas VOCs, the VOC emissions between the sites are comparable.

As stated in the EPA Tier 1 guidance, illustrative MERPs for NOX tend to be lower than VOC which suggests most areas included in this assessment are more often NOX limited rather than VOC limited in terms of O3 formation. The Terry County hypothetical site has an illustrative MERP much higher for VOC than for NOx, 15,669 tpy vs 417 tpy, respectively, indicating a NOx limited regime. The magnitude of point source emissions surrounding the Husky CDP site and the Terry County hypothetical sight is virtually the same. The nonpoint source of VOC vs NOx for the Eddy and Lea counties would indicate that the area surrounding the Husky CDP site is NOx limited as well. Given that the two sites are NOx-limited a similar

response to NOx and VOC changes are expected given similar ozone levels at the two sites and similar climate conditions. The Hobbs ozone monitor is located midway between the sites and is expected to be indicative of the ozone at both sites. As presented previously, the climate at the two sites is similar and the illustrative MERPs are expected to be indicative of the Husky CDP site.

The land use surrounding Husky CDP and the Terry Co, TX source is shown in Figure 7. Land cover codes indicating development show 12.7% of the area surrounding Husky CDP is developed and 39.5 % of the area surrounding the Terry Co, TX source is developed. While there is a larger urban area at the hypothetical site, the nonpoint source NOx emissions for the two areas are comparable.

The Hobbs air quality monitoring station is located between the Husky CDP and the EPA hypothetical site. The monitored data is included in Table 4. There a $PM_{2.5}$ monitor within the 50 km area surrounding the Terry Co, TX site at Lubbock 12th Street (AQS Site ID:48-303-1028). The monitor began measurements in July of 2018. Results for the partial year show an annual average of 5.8 ug/m^3 and a 98th percentile 24-hr block average of 20 ug/m^3. No data was found on the speciation of the $PM_{2.5}$. This is comparable to the 2018 monitored results at Hobbs of 18 ug/m^3 for the 98th percentile 24-hr average and 8 ug/m^3 for the annual average.

The Terry Co, TX hypothetical site was modeled with a 10-meter stack with a 500 TPY emission rate and with a 90-meter stack height with a 500, 1000, and 3000 TPY emission rate. Under each scenario the stack parameters were:

- Stack diameter of 5 meters
- Exit temperature of 311 K
- Exit velocity of 27 m/s, and
- Flow rate of 537 m^3/s

The stack parameters for the source types at Husky CDP are anticipated to be at or above the 10 meter stack for the hypothetical source and approximately one-half of the tallest modeled stack for the hypothetical source. The estimated facility emissions are approximately 250 to 315 TPY NOx, 450 TPY VOC, and 5 to 38 TPY SO_2.

Given the proximity to the site and the similar terrain, climate conditions, and surrounding source emissions, the hypothetical source located in Terry County Texas was determined to be suitable for use in determining the ozone and secondary $PM_{2.5}$ impacts for Husky CDP. The lowest proposed stack at Husky CDP is 10 meters and this stack height was selected from the hypothetical source.

12.5.2 Acquire the source characteristics and associated modeling results

The MERPs model results spreadsheet, illustrative_merps_epa_modeling_2018dec28version.xlsx, was downloaded from the EPA website. The EPA calculated MERPs were obtained for the Terry Co, TX hypothetical site at a 10-meter release height. The EPA MERP values are as follows:

- O_3 NOx -417 TPY
- O_3 VOC – 15,669 TPY
- Daily $PM_{2.5}$ NOx – 7,331 TPY
- Annual $PM_{2.5}$ NOx – 26,780 TPY
- Daily SO_2 NOx – 2,170 TPY

- Annual SO_2 NOx – 25,929 TPY

12.5.3 Ozone Impacts

The EPA guidance lists the ozone MERP considering NOx emissions as 417 TPY and 15,669 TPY when considering VOC. The impact due to the project will be considered insignificant if the sum of the ratio of the project emissions to the MERP for NOx and VOC is less than 1 as follows:

[TPY Project NOx emissions /417 + TPY Project VOC emissions/15,669] ≤ 1

12.5.4 Daily $PM_{2.5}$

The EPA guidance lists the daily $PM_{2.5}$ MERP considering NOx emissions as 7,331 TPY and 2,170 TPY when considering SO_2. The daily $PM_{2.5}$ impact due to secondary formation will be determined using the daily NO_x and SO_2 emissions as follows:

$PM_{2.5}$ 24-hr = 1.2 ug/m^3 x [NO_x TPY/7,331 + SO_2 TPY/2,170]

The estimate of secondary $PM_{2.5}$ will be added to the modeled estimates of directly emitted $PM_{2.5}$ to determine if impacts are significant and to demonstrate compliance with the NAAQS and PSD Increment.

12.5.5 Annual PM2.5

The EPA guidance lists the annual $PM_{2.5}$ MERP considering NOx emissions as 26,780 TPY and 25,929 TPY when considering SO_2. The annual $PM_{2.5}$ impact due to secondary formation will be determined using the annual NO_x and SO_2 emissions as follows:

$PM_{2.5}$ Annual = 0.2 ug/m^3 x [NO_x TPY/26,780 + SO_2 TPY/25,929]

The estimate of secondary $PM_{2.5}$ will be added to the modeled estimates of directly emitted $PM_{2.5}$ to determine if impacts are significant and to demonstrate compliance with the NAAQS and PSD Increment.

12.6 PSD Additional Impacts Analysis

12.6.1 Growth Analysis

XTO does not anticipate any associated industrial or commercial growth due to the proposed facility. Therefore, negligible growth-related ambient air impacts are expected.

12.6.2 Soil and Vegetation Analysis

The secondary NAAQS represent ambient air concentrations below which most types of soil and vegetation are unaffected by criteria pollutants. Predicted ambient air concentrations less than the secondary NAAQS will not result in harmful effects to either soil or vegetation.

12.6.3 Visibility

The NMED guideline requires the visibility of clear sky from nearby state or local parks be analyzed in the absence of nearby mountains. The nearest state park is the Living Desert located 35 km west of the XTO –Husky CDP site. The EPA VISCREEN model will be used to assess the Class II visibility for clear sky from the Living Desert Park. VISCREEN is designed primarily for assessing plume visual impacts in Class I areas, it can also be applied in PSD Class II areas. In such cases these distances can be specified arbitrarily. The Federal Land Managers' Air Quality Related Values Work Group (FLAG) guidance recommends since visibility is an instantaneous value, short-term (24-hour) maximum allowable emissions should be used. If

a screening analysis of a new or modified source can demonstrate that its emissions will not cause a plume with any hourly estimates of ΔE greater than or equal to 2.0, or the absolute value of the contrast values (|C|) greater than or equal to 0.05, the FLM is likely not to object to the issuance of the PSD permit based on near field visibility impacts and no further near field visibility analyses will be requested. There are no screening values specific to Class II areas. The maximum 24-hour emissions will be input into the VISCREEN model and compared to the Class I Level-1 screening values.

12.6.4 PSD Class I Impacts

Class I increment will be assessed using the near-field model, AERMOD. Compliance with the Class I increment will be demonstrated using the Class II analysis by placing receptors at 50 km from the facility using a polar grid spaced at 0.5 degree intervals from the 235 degree azimuth to the 250 degree azimuth. The maximum modeled impact will be compared to the Class I SIL. The maximum PM2.5 impact at this distance will be added to the secondary PM2.5 and compared to the Class I SIL. The Federal Land Manager will be consulted for any further analysis required for AQRVs.

Tables

Table 1 - Facility Wide Emission Rates Comparison to SERs of Table 2 of 20.2.74.502 NMAC

Pollutant	Significant Emission Rate (tpy)	XTO Maximum Proposed Emissions (tpy)	IS Facility below SER?
Carbon monoxide	100	235	No
Nitrogen oxides	40	260	No
Ozone (Volatile Organic Compounds or nitrogen oxides)	40 VOC	489	No
	40 NO_X	260	No
Particulate Matter			
Total Suspended Particulate (TSP)	25	183	No
PM_{10} emissions	15	177	No
Direct $PM_{2.5}$ emissions	10	175	No
Secondary $PM_{2.5}$ emissions	40 SO_2	51	No
	40 NO_X	260	No
Sulfur compounds			
Hydrogen sulfide (H_2S)	10	0.0	Yes
Sulfur dioxide	40	51	No
Sulfuric acid mist	7	15	No

Note: The maximum emissions represent the Cogen scenario which produces the highest emissions. Both scenarios exceed the PSD SERs for the same pollutants.

Table 2 - Background, Air Quality Standards, and Significance Levels

Pollutant	Avg. Period	Background	SIL (ug/m^3)		AAQS (ug/m^3)		PSD Increment (ug/m^3)	
		ug/m3	Class II	Class I	NAAQS	NMAAQS	Class I	Class II
CO	8-hr	3.3	500		10,303.60	9,960.10		
	1-hr	4.7	2,000		4,069.60	14,997.50		
NO_2	Annual	8.1	1	0.1	99.66	94.02	2.5	25
	24-hr		5			188.03		
	1-hr	63.4	7.52		188.03			
O_3	8-hr	137.3	1.96		137.3			
$PM_{2.5}$	Annual	7.6	0.2	0.05	12		1	4
	24-hr	13.4	1.2	0.27	35		2	9
PM_{10}	Annual		1	0.2			4	17
	24-hr	38	5	0.3	150		8	30
SO_{2*}	Annual	1.48	1	0.1		52.4	2	20
	24-hr		5	0.2		261.9	5	91
	3-hr		25	1	1,309.30		25	512
	1-hr	68.3	7.8		196.4			

Note: *SO_2, background values from NMED Guideline for Amarillo, TX. Background for SO2 will be accounted for by explicitly modeling the surrounding sources.

Compliance with 1-hr NO_2 standard demonstrates compliance with 24-hr NO_2 standard.

O_3 impacts will be demonstrated to be insignificant.

Table 3 - Proposed CO Background Values

Monitor	Year	CO 1-hr 2nd Max (ppm)	CO 8-hr 2nd Max (ppm)
El Paso, TX	2018	4.9	3.7
	2017	4.2	2.9
	2016	3.2	2
Average		4.1	2.9

Table 4 - Proposed NO_2, PM_{10} & $PM_{2.5}$ Background Values

Monitor	Year	NO_2 98th %ile (ppb)	NO_2 Annual Mean (ppb)	$PM_{2.5}$ 98th %ile (ug/m^3)	$PM_{2.5}$ Wtd. Mean (ug/m^3)	PM_{10} 24-hr 2nd Max (ug/m^3)
Hobbs, NM	2018	36	5	18	8	.
	2017	32	4	17	9	.
	2016	33	4	12	5.9	.
	2014					30
	2013					47
	2012					37
Average		33.7	4.3	13.4	7.6	38

Source: EPA AirData Air Quality Monitors
PM2.5 2017 source https://www.epa.gov/air-trends/air-quality-design-values#report

Table 5 - Major Source Baseline Dates

Pollutant	Major Source Baseline Date
NO_2	February 8, 1988
SO_2	January 6, 1975
PM_{10}	January 6, 1975
$PM_{2.5}$	October 20, 2010

Table 6 - Class I Areas within 300 km of Project Site

Class I Area	Distance (km)
Carlsbad Caverns	51
Guadalupe Mountains	93
Salt Creek Wilderness	136
White Mountains	201

Table 7 - Climate Stations Surrounding Hypothetical MERP Site.

Climate Station	Season	Precip (in)	Min Tmp (°F)	Avg Tmp (°F)	Max Tmp (°F)
BROWNFIELD 2, TX	Annual	19.58	46.8	60.8	74.9
	Winter	2.2	28.1	42.3	56.5
	Summer	7.37	65.5	78.5	91.5
	Spring	4.96	45.8	60.8	75.8
	Autumn	5.05	47.3	61.3	75.3
LEVELLAND, TX US	Annual	19.84	45.8	59.4	73
	Winter	2.27	27.3	40.7	54.1
	Summer	7.64	64.8	77.6	90.4
	Spring	4.52	44.3	59.1	73.9
	Autumn	5.41	46.3	59.7	73.1
SHALLOWATER, TX US	Annual	20.53			
	Winter	2.34			
	Summer	7.12			
	Spring	5.67			
	Autumn	5.4			
TAHOKA, TX US	Annual	21.21	47.8	61	74.2
	Winter	2.49	29.4	42.7	55.9
	Summer	8.04	66.5	78.7	90.8
	Spring	5.33	46.4	60.8	75.2
	Autumn	5.35	48.4	61.5	74.5
LUBBOCK 6 NNE, TX US	Annual	21.09			
	Winter	2.33			
	Summer	7.86			
	Spring	5.38			
	Autumn	5.52			
LUBBOCK INTERNATIONAL AIRPORT, TX US	Annual	19.12	47	60.7	74.3
	Winter	2.16	27.8	41.7	55.6
	Summer	6.86	66.2	78.9	91.6
	Spring	4.81	46.2	60.7	75.3
	Autumn	5.29	47.5	61	74.4
RANSOM CANYON, TX US	Annual	21.33			
	Winter	2.47			
	Summer	7.42			
	Spring	5.84			
	Autumn	5.6			
Average	Annual	20.4	46.9	60.5	74.1
	Winter	2.3	28.2	41.9	55.5
	Summer	7.5	65.8	78.4	91.1
	Spring	5.2	45.7	60.4	75.1
	Autumn	5.4	47.4	60.9	74.3

Table 8 - Climate Stations within 50 Kilometers of Husky CDP.

Climate Station	Season	Precip (in)	Min Tmp (°F)	Avg Tmp (°F)	Max Tmp (°F)
WASTE ISOLT N PILOT PLANT, NM	Annual	13.98	48.4	63.4	78.3
	Winter	1.7	30.2	45.1	60.1
	Summer	6.13	66.9	80.7	94.5
	Spring	2.38	47.4	63.8	80.1
	Autumn	3.77	48.9	63.5	78.1
CARLSBAD, NM US	Annual	13.41	47.5	62.4	77.4
	Winter	1.64	29	44.1	59.1
	Summer	5.37	66.2	80.1	94
	Spring	2.32	46.7	62.6	78.5
	Autumn	4.08	47.6	62.5	77.4
CAVERN CITY AIRPORT, NM US	Annual	13.67	48.2	63	77.7
	Winter	1.56	30.1	44.7	59.4
	Summer	5.58	66.5	80.6	94.6
	Spring	2.53	47.6	63.5	79.4
	Autumn	4	48.3	62.7	77.2
BRANTLEY DAM, NM US	Annual	13.24	46.9	62	77
	Winter	1.47	28.2	43.5	58.8
	Summer	5.36	66.1	79.9	93.7
	Spring	2.56	46.5	62.6	78.7
	Autumn	3.85	46.5	61.5	76.6
MALJAMAR, NM US	Annual	16.26	45.4	62.3	79.2
	Winter	1.63	27.2	43.8	60.4
	Summer	6.87	63.6	80.1	96.5
	Spring	2.92	44.2	62.4	80.6
	Autumn	4.84	46.1	62.5	78.9
Average	Annual	14.1	47.3	62.6	77.9
	Winter	1.6	28.9	44.2	59.6
	Summer	5.9	65.9	80.3	94.7
	Spring	2.5	46.5	63.0	79.5
	Autumn	4.1	47.5	62.5	77.6

Table 9 - 2014 NEI Point Sources within 50 km of Proposed Site and Hypothetical Sources

Otero County, NM Hypothetical Site						
FACILITY_TYPE	NH3	CO	NOx	PM2.5	SO2	VOC
Airport		99.58	5.83			
Landfill						
Totals	**0**	**99.58**	**5.83**	**0**	**0**	**0**
Terry County, TX Hypothetical Site						
FACILITY_TYPE	NH3	CO	NOx	PM2.5	SO2	VOC
Airport		575.76	75.93	9.08	8.71	28.92
Compressor Station		18.91	73.73			
Electricity Generation via Combustion	21.8	303.18	821.65	81.95		39.1
Food Products Processing Plant		31.03	27	224.61		279.36
Gas Plant		103.26	266.99	31.94	284.95	107.04
Rail Yard		6.73	49.25			
Steam/Heating Facility		26.3	51.79			12.9
Unspecified	5.97	64.59	76.9	5.83		31.3
Totals	**27.77**	**1129.76**	**1443.24**	**353.41**	**293.66**	**498.62**
Husky CDP						
FACILITY_TYPE	NH3	CO	NOx	PM2.5	SO2	VOC
Airport		28.13	14.07			5.14
Compressor Station		516.77	1309.35		23.6	397.68
Gas Plant		581.27	591.56	15.63	572.27	264.62
Oil or Gas Facility (On-shore)		52.35	9.62		222.7	
Unspecified		107.09	71.23	96.02		
Totals	**0**	**1285.61**	**1995.83**	**111.65**	**818.57**	**667.44**

https://edap.epa.gov/public/extensions/nei_report_2014/data/NEI_Report_PointSource_Data_2014v2.zip

Table 10 - County Nonpoint Source Emissions

Counties	sector	sector_grp	NH3	NOx	PM2.5	SO2	VOC
Eddy & Lea County, NM	afdust_adj	nonpoint			2618.20		
	ag	nonpoint	2322.52				115.23
	beis	beis		1919.10			110977.02
	nonpt	nonpoint	19.10	295.28	248.26	89.68	1687.80
	nonroad	nonroad	0.50	301.82	30.27	0.72	516.11
	np_oilgas	nonpoint		11063.53	295.32	954.40	102303.69
	onroad	onroad	52.40	3700.03	114.88	14.13	1574.92
	ptagfire	nonpoint	4.30	1.48	6.80	0.36	3.55
	ptfire	fires	43.75	43.60	234.62	22.21	628.90
	rail	nonpoint	0.06	188.52	4.27	0.07	7.33
	rwc	nonpoint	4.52	10.81	87.05	1.60	100.95
Totals			**2447.15**	**17524.17**	**3639.68**	**1083.17**	**217915.49**
Terry, Lynn, Hockley & Lubbock County, TX	afdust_adj	nonpoint			2869.71		
	ag	nonpoint	5964.79				77.04
	beis	beis		2505.13			22747.59
	nonpt	nonpoint	66.13	549.19	165.69	29.58	5237.69
	nonroad	nonroad	4.14	2376.72	204.17	5.65	955.12
	np_oilgas	nonpoint		1444.96	28.32	64.33	19367.19
	onroad	onroad	92.13	5837.84	180.80	26.25	2145.92
	ptagfire	nonpoint	40.52	7.19	21.91	2.59	14.35
	ptfire	fires	12.75	18.19	72.05	8.13	183.35
	rail	nonpoint	0.19	366.11	9.49	0.22	19.16
	rwc	nonpoint	3.42	8.87	67.87	1.15	74.66
Totals			**6184.07**	**13114.22**	**3620.01**	**137.89**	**50822.09**

ftp://newftp.epa.gov/air/emismod/2014/v2/2014fd/reports/2014fd_nata_county_annual_report_all_species.xlsx

Figures

Figure 1 - Husky CDP Air Quality Related Locations

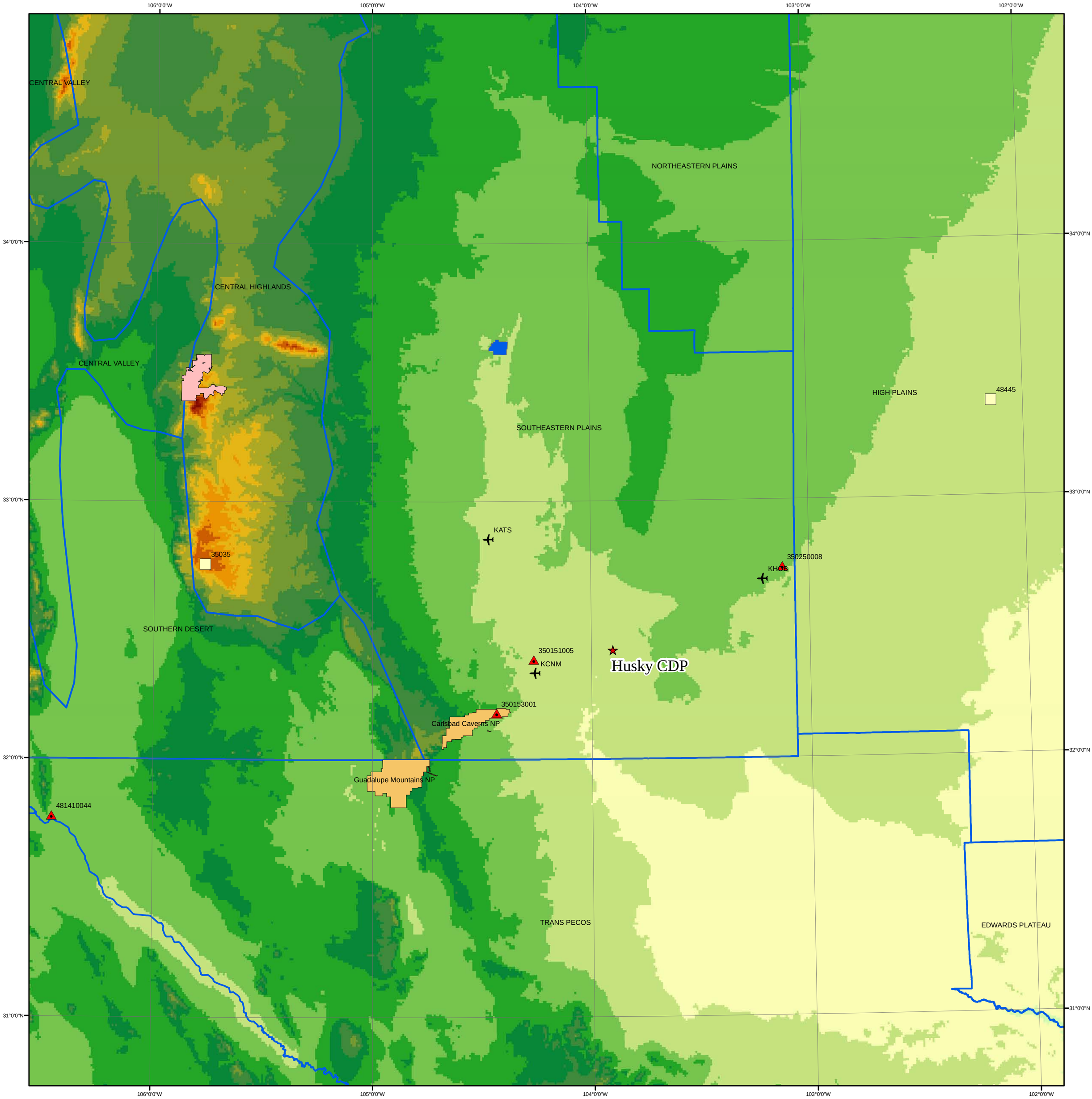

Legend

- MERPs
- Monitors
- NWS
- USFS Class I
- NPS Class I
- FWS Class I
- Climate Divsions

1:1,100,000

0 5 10 20 30 40 Miles



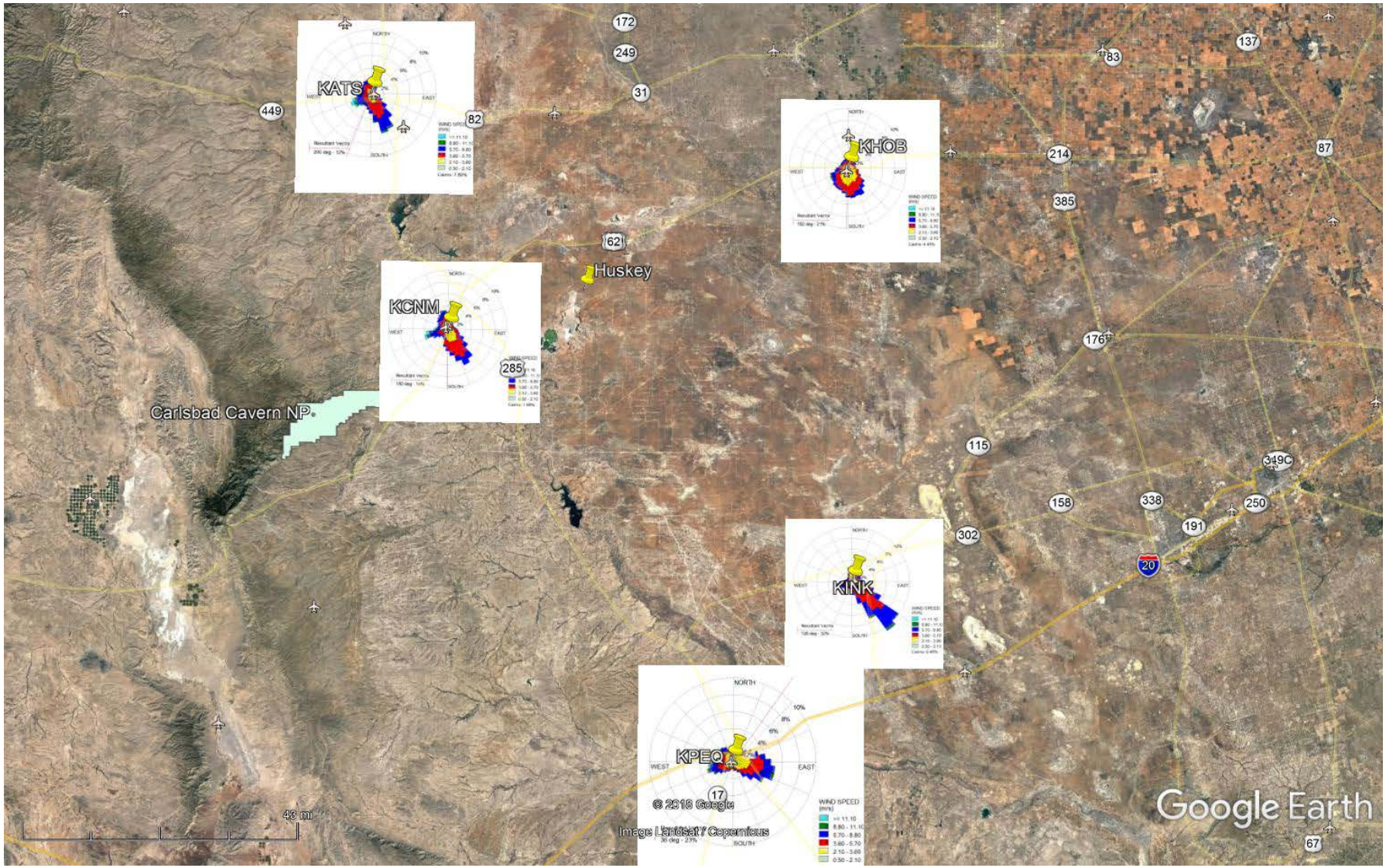

Figure 2 - Wind Rose from Surrounding NWS stations.

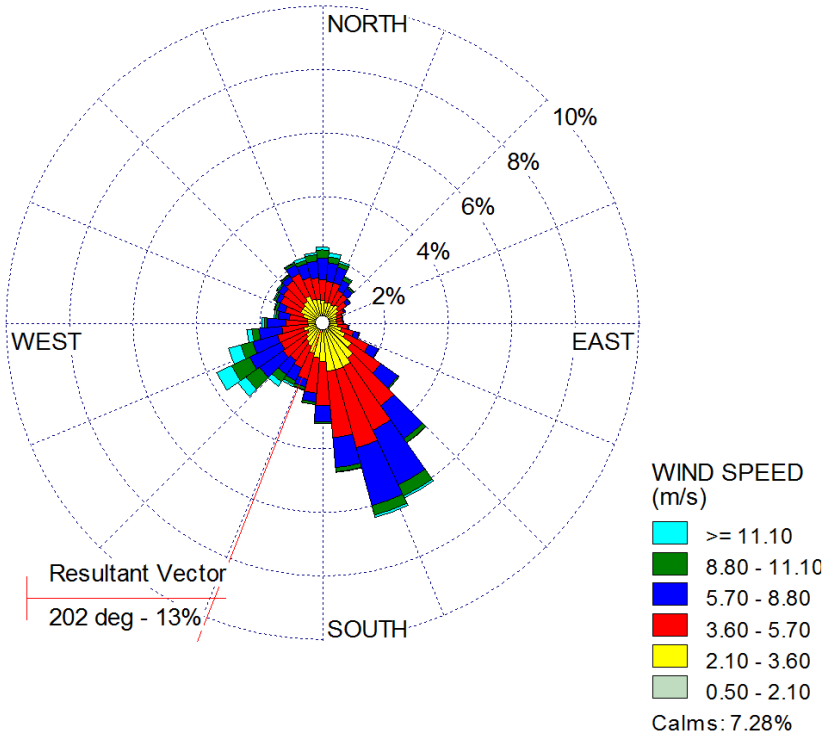

Figure 3 - Artesia Wind Rose 2011-2015

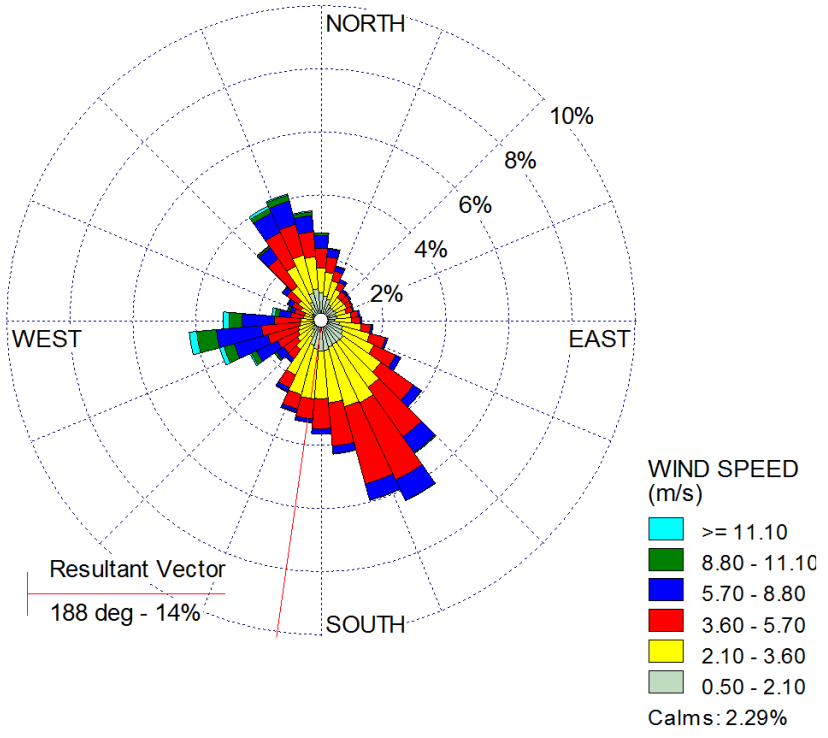

Figure 4 - Carlsbad Wind Rose 2013-2017

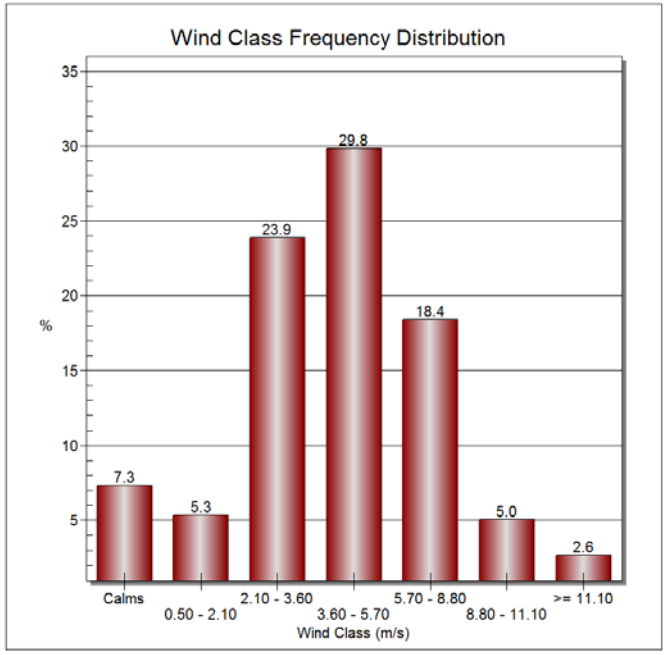

Figure 5 - Artesia Wind Distribution 2011-2015

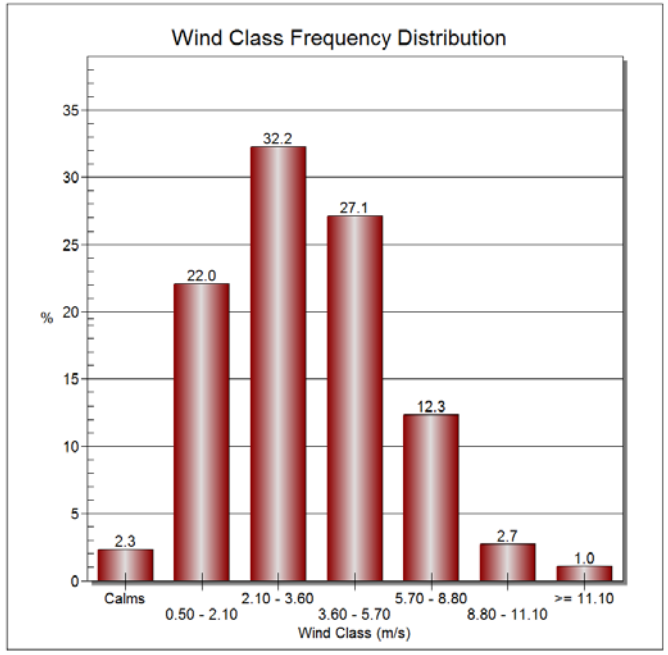

Figure 6 - Carlsbad Wind Distribution 2013-2017

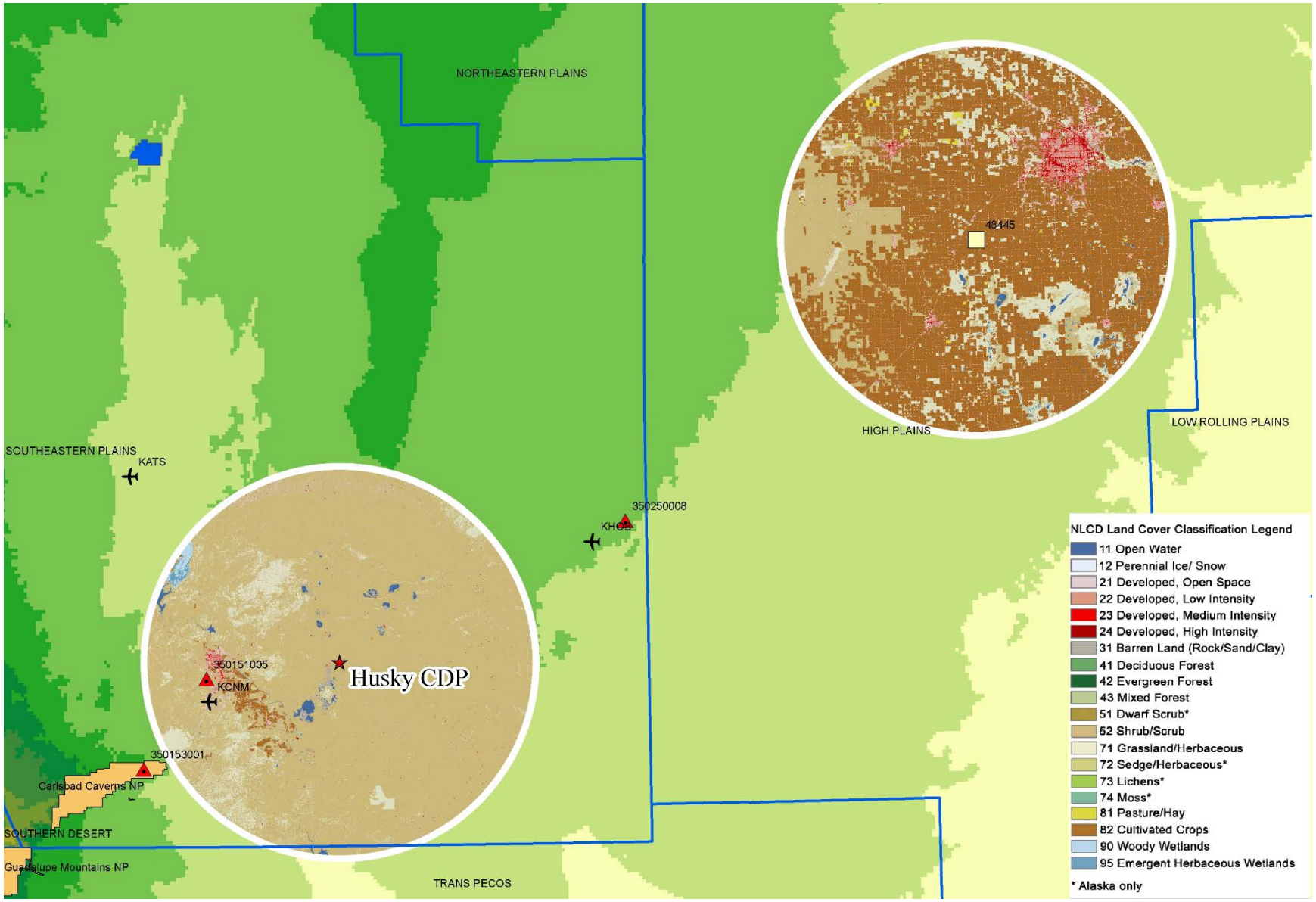

Figure 7 - Land Use Surrounding Project Site and Hypothetical Site

Source: Multiresolution Land Characteristics Consortium at https://www.mrlc.gov/.

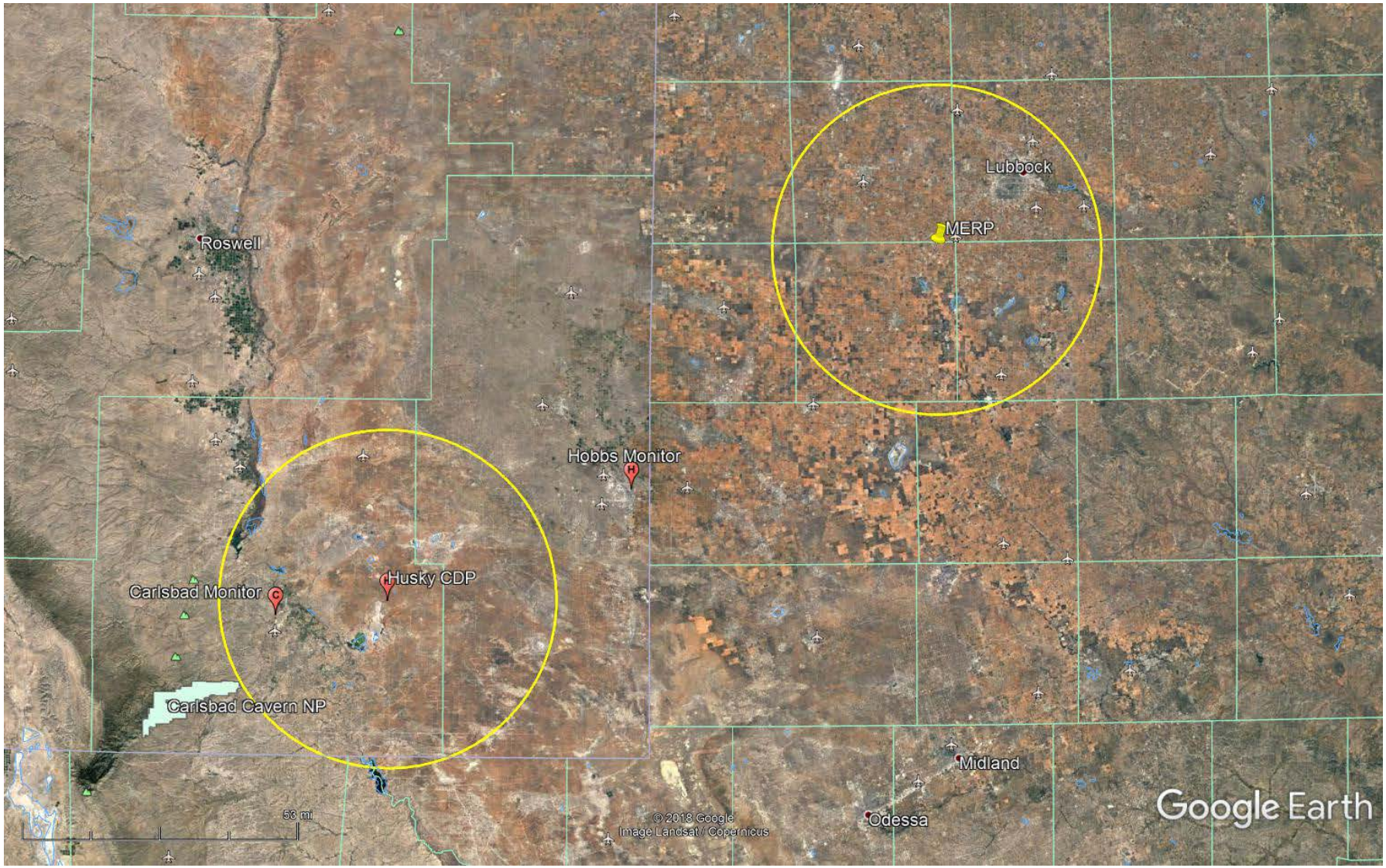

Figure 8 - 50 km Radius Location within Counties

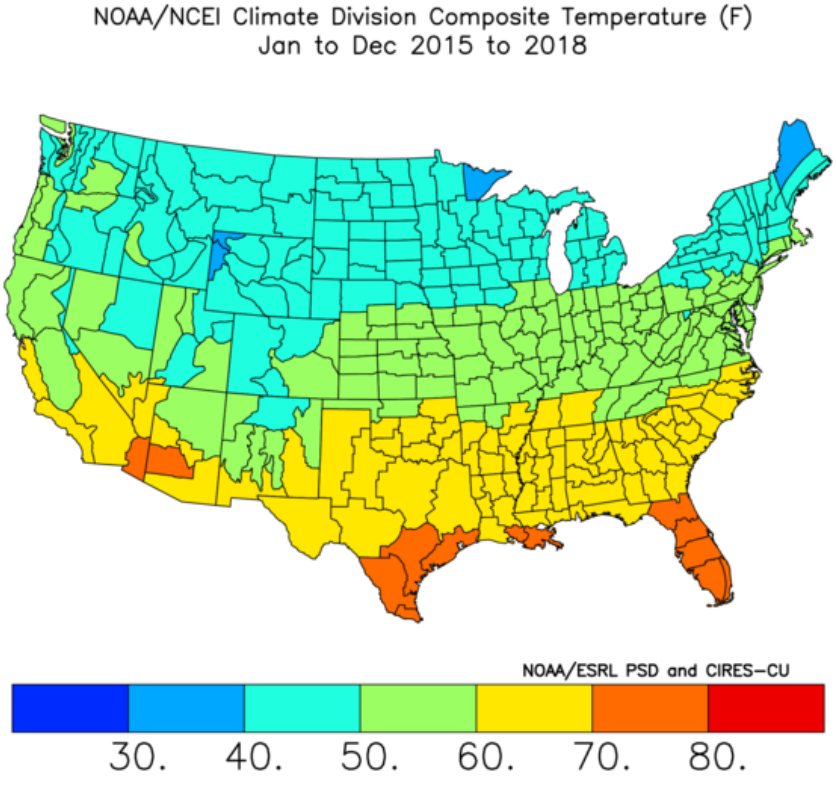

Figure 9 – Climate Division Composit Temperture (F)

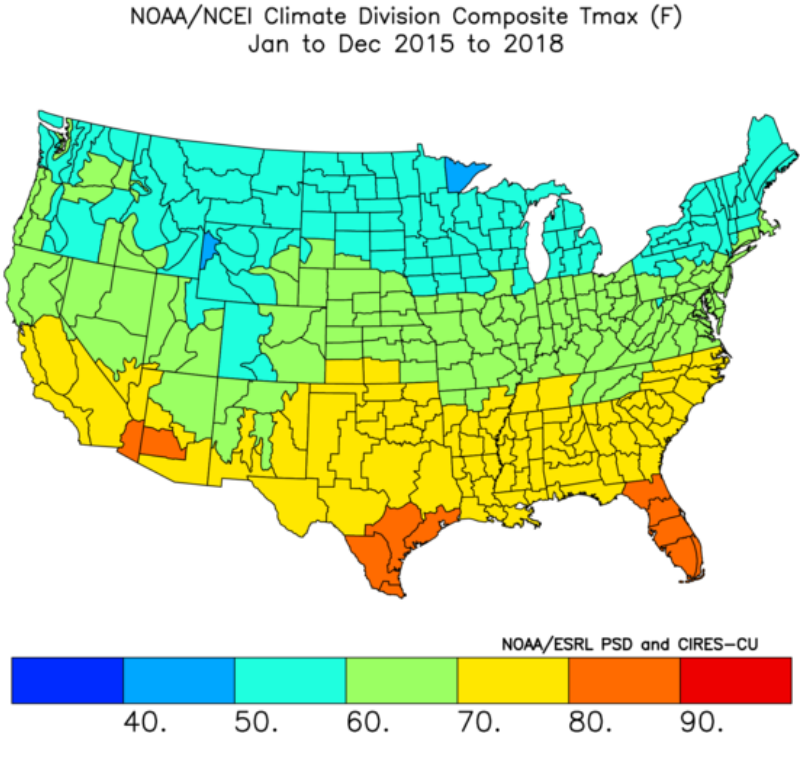

Figure 10 – Climate Division Composite Tmax (F)

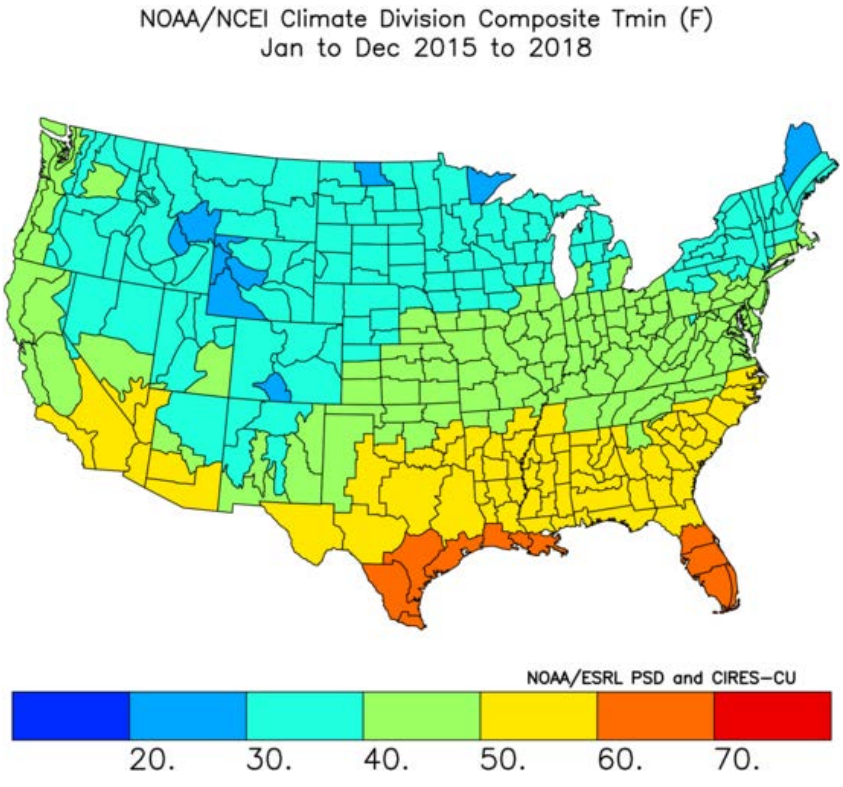

Figure 11 – Climate Division Composite Tmin (F)

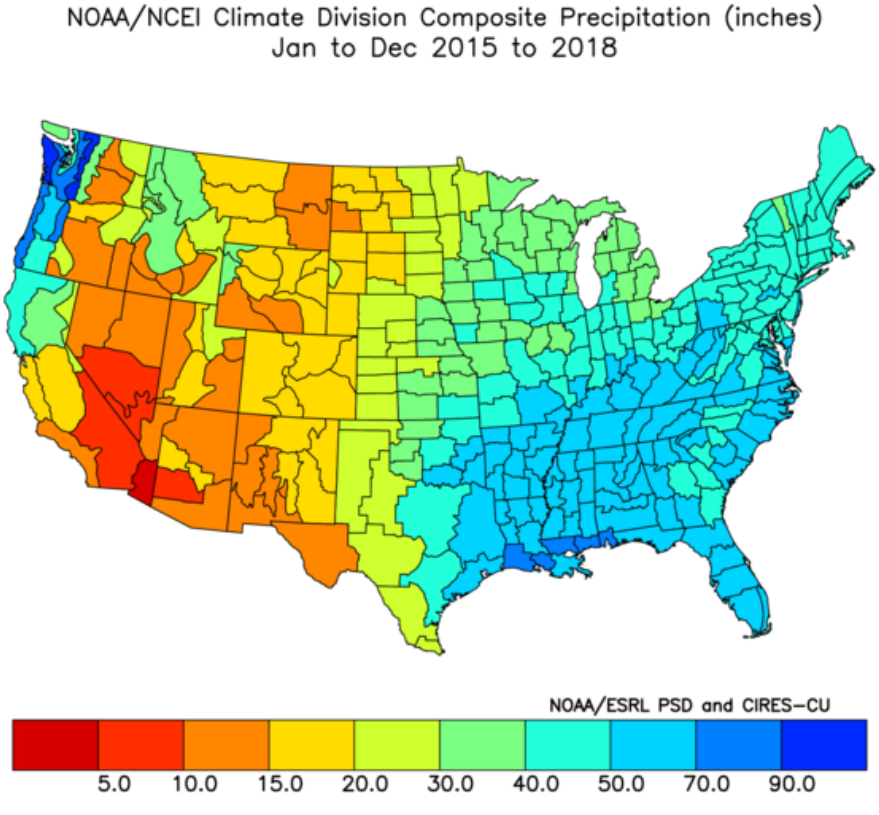

Figure 12 –Climate Division Composite Precipitation (in)

Attachment C – Facility Layout

Figure 1 - Facility Layout

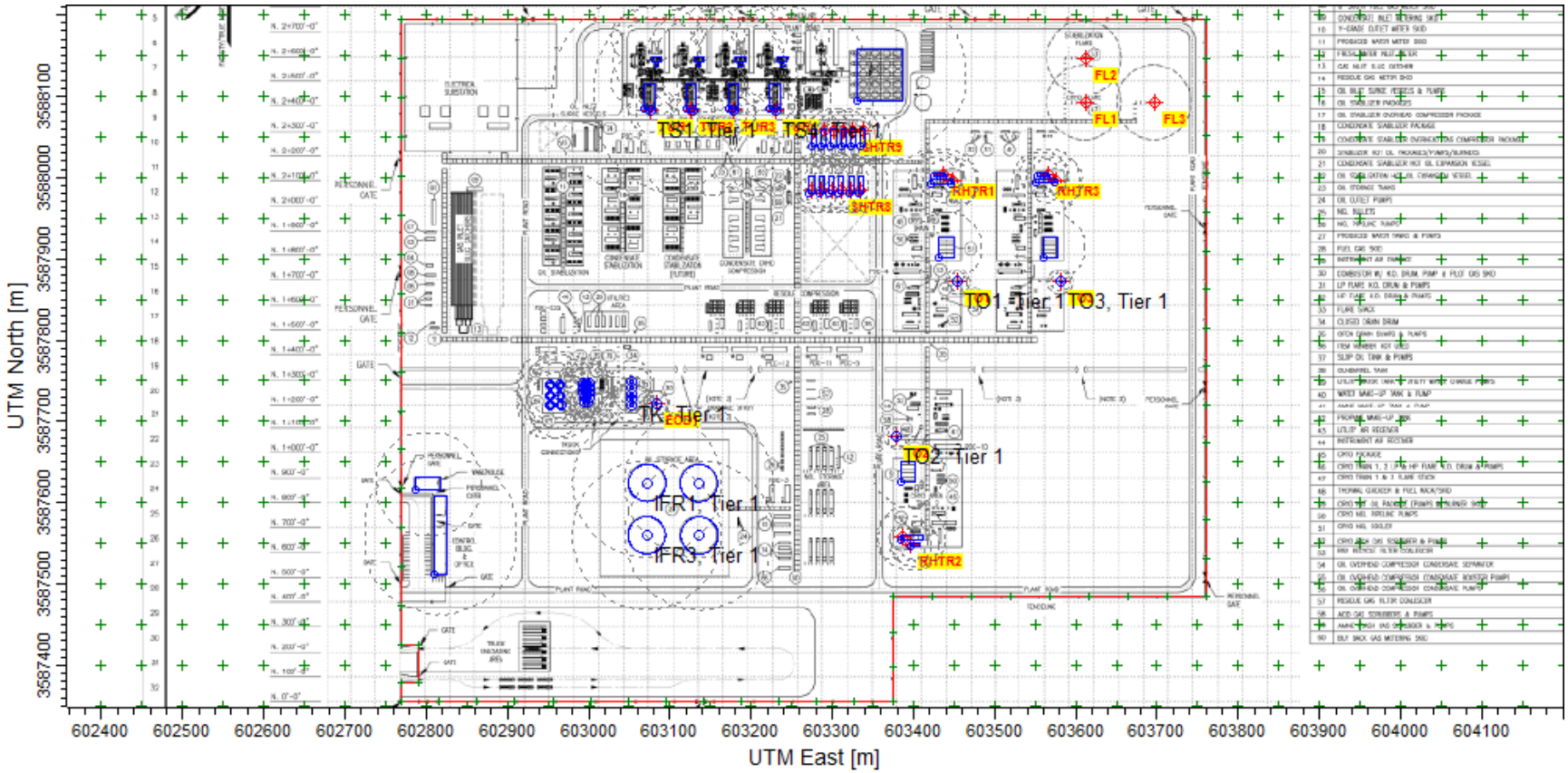

Tab 24

Confidential Black Oil PVT Study