Enterprise Products

ENTERPRISE PRODUCTS PARTNERS L.P.
ENTERPRISE PRODUCTS HOLDINGS LLC
(General Partner)

ENTERPRISE PRODUCTS OPERATING LLC

March 11, 2019

7015 0640 0003 1834 8521
Return Receipt Requested

New Mexico Environment Department
Air Quality Bureau
Permits Section
525 Camino de los Marquez, Suite 1
Santa Fe, New Mexico 87505

RE: Operating Permit Renewal Application
Title V Permit No. P116-R2
Enterprise Field Services, LLC - Chaco Natural Gas Processing Plant

Sir or Madam:

Enterprise Field Services, LLC ("Enterprise") is requesting renewal of Title V Operating Permit No. P116-R2 for the Chaco Natural Gas Processing Plant in San Juan County, New Mexico. This application is being submitted pursuant to 20.2.70.300.B(2) New Mexico Administrative Code.

We respectfully request the opportunity to review a complete copy of the revised draft permit prior to permit issuance. Should you have any questions or require additional information regarding this application, please contact me at (713) 381-6698 (rmhavalda@eprod.com) or Bradley Cooley at (713) 381-5828.

Thank you,

Robert Havalda
Senior Engineer, Environmental

Bradley J. Cooley, P.E.
Senior Manager, Environmental

/mbp
Attachments

P.O. BOX 4324
HOUSTON, TEXAS 77210-4324
713.381.6500

1100 LOUISIANA STREET
HOUSTON, TEXAS 77002-5227
www.enterpriseproducts.com

Enterprise Products

Enterprise Field Services, LLC
Chaco Natural Gas Processing Plant
San Juan County, New Mexico

Title V Permit Renewal
Permit No. P116-R2

MARCH 2019

Mail Application To:		**For Department use only:**
New Mexico Environment Department Air Quality Bureau Permits Section 525 Camino de los Marquez, Suite 1 Santa Fe, New Mexico, 87505 Phone: (505) 476-4300 Fax: (505) 476-4375 www.env.nm.gov/aqb		AIRS No.:

Universal Air Quality Permit Application

Use this application for NOI, NSR, or Title V sources.

Use this application for: the initial application, modifications, technical revisions, and renewals. For technical revisions, complete Sections, 1-A, 1-B, 2-E, 3, 9 and any other sections that are relevant to the requested action; coordination with the Air Quality Bureau permit staff prior to submittal is encouraged to clarify submittal requirements and to determine if more or less than these sections of the application are needed. Use this application for streamline permits as well. For NOI applications, submit the entire UA1, UA2, and UA3 applications on a single CD (no copies are needed). For NOIs, hard copies of UA1, Tables 2A, 2D & 2F, Section 3 and the signed Certification Page are required.

This application is submitted as (check all that apply): ☐ Request for a No Permit Required Determination (no fee)
☐ **Updating** an application currently under NMED review. Include this page and all pages that are being updated (no fee required).
Construction Status: ☐ Not Constructed ☐ Existing Permitted (or NOI) Facility ☐ Existing Non-permitted (or NOI) Facility
Minor Source: ☐ a NOI 20.2.73 NMAC ☐ 20.2.72 NMAC application or revision ☐ 20.2.72.300 NMAC Streamline application
Title V Source: ☐ Title V (new) ☑ Title V renewal ☐ TV minor mod. ☐ TV significant mod. TV Acid Rain: ☐ New ☐ Renewal
PSD Major Source: ☐ PSD major source (new) ☐ minor modification to a PSD source ☐ a PSD major modification

Acknowledgements:

☐ I acknowledge that a pre-application meeting is available to me upon request. ☑ Title V Operating, Title IV Acid Rain, and NPR applications have no fees.
☐ $500 NSR application Filing Fee enclosed OR ☐ The full permit fee associated with 10 fee points (required w/ streamline applications).
☐ Check No.: N/A in the amount of N/A
☑ I acknowledge the required submittal format for the hard copy application is printed double sided 'head-to-toe', 2-hole punched (except the Sect. 2 landscape tables is printed 'head-to-head'), numbered tab separators. Incl. a copy of the check on a separate page.
☐ This facility qualifies to receive assistance from the Small Business Environmental Assistance program (SBEAP) and qualifies for 50% of the normal application and permit fees. Enclosed is a check for 50% of the normal application fee which will be verified with the Small Business Certification Form for your company.
☐ This facility qualifies to receive assistance from the Small Business Environmental Assistance Program (SBEAP) but does not qualify for 50% of the normal application and permit fees. To see if you qualify for SBEAP assistance and for the small business certification form go to https://www.env.nm.gov/aqb/sbap/small_business_criteria.html).

Citation: Please provide the **low level citation** under which this application is being submitted: **20.2.70.300.B(2) NMAC**
(e.g. application for a new minor source would be 20.2.72.200.A NMAC, one example for a Technical Permit Revision is 20.2.72.219.B.1.b NMAC, a Title V acid rain application would be: 20.2.70.200.C NMAC)

Section 1 – Facility Information

Section 1-A: Company Information		AI # if known (see 1st 3 to 5 #s of permit IDEA ID No.): 1148	Updating Permit/NOI #: P116-R2
1	Facility Name: Chaco Natural Gas Processing Plant	Plant primary SIC Code (4 digits): 1311	
		Plant NAIC code (6 digits): 211111	
a	Facility Street Address (If no facility street address, provide directions from a prominent landmark): From 544 and 44/550 in Bloomfield, drive south on 44/550 for approximately 12.3 miles and turn right on Rd. 7100. Follow for approximately 9.8 miles, the facility will be on your left.		
2	Plant Operator Company Name: Enterprise Products Operating LLC	Phone/Fax: (713) 381-6595 / (281) 887-8086	

a	Plant Operator Address: P.O. Box 4324, Houston TX 77210-4324	
b	Plant Operator's New Mexico Corporate ID or Tax ID: 32-89188	
3	Plant Owner(s) name(s): Enterprise Field Services, LLC	Phone/Fax: (713) 381-6595 / (281) 887-8086
a	Plant Owner(s) Mailing Address(s): P.O. Box 4324, Houston TX 77210-4324	
4	Bill To (Company): Enterprise Products Operating LLC	Phone/Fax: (713) 381-6595 / (281) 887-8086
a	Mailing Address: P.O. Box 4324, Houston TX 77210-4324	E-mail: environmental@eprod.com
5	☒ Preparer and ☐ Consultant: Robert Havalda	Phone/Fax: (713) 381-6595 / (281) 887-8086
a	Mailing Address: P.O. Box 4324, Houston, TX 77210-4324	E-mail: rmhavalda@eprod.com
6	Plant Operator Contact: James Lieb	Phone/Fax: 505-599-2159
a	Address: 614 Reilly Drive, Farmington, NM 87401-2634	E-mail: jplieb@eprod.com
7	Air Permit Contact: Robert Havalda	Title: Senior Environmental Engineer
a	E-mail: rmhavalda@eprod.com	Phone/Fax: 713-381-6698 / 713-381-6811
b	Mailing Address: P.O. Box 4324, Houston TX 77210-4324	

Section 1-B: Current Facility Status

1.a	Has this facility already been constructed? ☒ Yes ☐ No	1.b If yes to question 1.a, is it currently operating in New Mexico? ☒ Yes ☐ No
2	If yes to question 1.a, was the existing facility subject to a Notice of Intent (NOI) (20.2.73 NMAC) before submittal of this application? ☐ Yes ☒ No	If yes to question 1.a, was the existing facility subject to a construction permit (20.2.72 NMAC) before submittal of this application? ☒ Yes ☐ No
3	Is the facility currently shut down? ☐ Yes ☒ No	If yes, give month and year of shut down (MM/YY): N/A
4	Was this facility constructed before 8/31/1972 and continuously operated since 1972? ☒ Yes ☐ No	
5	If Yes to question 3, has this facility been modified (see 20.2.72.7.P NMAC) or the capacity increased since 8/31/1972? ☒Yes ☐No ☐N/A	
6	Does this facility have a Title V operating permit (20.2.70 NMAC)? ☒ Yes ☐ No	If yes, the permit No. is: P-116-R2
7	Has this facility been issued a No Permit Required (NPR)? ☐ Yes ☒ No	If yes, the NPR No. is: N/A
8	Has this facility been issued a Notice of Intent (NOI)? ☐ Yes ☒ No	If yes, the NOI No. is: N/A
9	Does this facility have a construction permit (20.2.72/20.2.74 NMAC)? ☒ Yes ☐ No	If yes, the permit No. is: 1555-M6
10	Is this facility registered under a General permit (GCP-1, GCP-2, etc.)? ☐ Yes ☒ No	If yes, the register No. is: N/A

Section 1-C: Facility Input Capacity & Production Rate

1	What is the facility's maximum input capacity? specify units (reference here and list capacities in Section 20, if more room is required)			
a	Current	Hourly: 29.17 MMscf/hr	Daily: 700 MMscf/day	Annually: 255,000 MMscf/yr
b	Proposed	Hourly: 29.17 MMscf/hr	Daily: 700 MMscf/day	Annually: 255,000 MMscf/yr
2	What is the facility's maximum production rate? specify units (reference here and list capacities in Section 20, if more room is required)			
a	Current	Daily: 700 MMscf/day	Hourly: 29.17 MMscf/hr	Annually: 255,000 MMscf/yr
b	Proposed	Daily: 700 MMscf/day	Hourly: 29.17 MMscf/hr	Annually: 255,000 MMscf/yr

Section 1-D: Facility Location Information

1	Section: 16	Range: 12W	Township: 26N	County: San Juan	Elevation (ft): 6,020
2	UTM Zone: ☒ 12 or ☐ 13			Datum: ☐ NAD 27 ☐ NAD 83 ☒ WGS 84	
a	UTM E (in meters, to nearest 10 meters): 758,000 m E			UTM N (in meters, to nearest 10 meters): 4,041,200 m N	
b	**AND** Latitude (deg., min., sec.): 36°29'00" N			Longitude (deg., min., sec.): 108°07'13" W	
3	Name and zip code of nearest New Mexico town: Bloomfield, NM 87413				
4	Detailed Driving Instructions from nearest NM town (attach a road map if necessary): From 544 and 44/550 in Bloomfield, drive south on 44/550 for approximately 12.3 miles and turn right on Rd. 7100. Follow for approximately 9.8 miles, the facility will be on your left.				
5	The facility is 14 miles southwest of Bloomfield, NM.				
6	Status of land at facility (check one): ☒ Private ☐ Indian/Pueblo ☐ Federal BLM ☐ Federal Forest Service ☐ Other (specify)				
7	List all municipalities, Indian tribes, and counties within a ten (10) mile radius (20.2.72.203.B.2 NMAC) of the property on which the facility is proposed to be constructed or operated: Municipalities: None; Indian Tribes: Navajo Nation; Counties: San Juan				
8	**20.2.72** NMAC applications **only**: Will the property on which the facility is proposed to be constructed or operated be closer than 50 km (31 miles) to other states, Bernalillo County, or a Class I area (see www.env.nm.gov/aqb/modeling/class1areas.html)? ☐ Yes ☒ No (20.2.72.206.A.7 NMAC) If yes, list all with corresponding distances in kilometers: N/A				
9	Name nearest Class I area: Mesa Verde National Park				
10	Shortest distance (in km) from facility boundary to the boundary of the nearest Class I area (to the nearest 10 meters): 80.1 km				
11	Distance (meters) from the perimeter of the Area of Operations (AO is defined as the plant site inclusive of all disturbed lands, including mining overburden removal areas) to nearest residence, school or occupied structure: 2,700 m				
12	Method(s) used to delineate the Restricted Area: Fencing "**Restricted Area**" is an area to which public entry is effectively precluded. Effective barriers include continuous fencing, continuous walls, or other continuous barriers approved by the Department, such as rugged physical terrain with steep grade that would require special equipment to traverse. If a large property is completely enclosed by fencing, a restricted area within the property may be identified with signage only. Public roads cannot be part of a Restricted Area.				
13	Does the owner/operator intend to operate this source as a portable stationary source as defined in 20.2.72.7.X NMAC? ☐ Yes ☒ No A portable stationary source is not a mobile source, such as an automobile, but a source that can be installed permanently at one location or that can be re-installed at various locations, such as a hot mix asphalt plant that is moved to different job sites.				
14	Will this facility operate in conjunction with other air regulated parties on the same property? ☒ No ☐ Yes If yes, what is the name and permit number (if known) of the other facility? **N/A**				

Section 1-E: Proposed Operating Schedule (The 1-E.1 & 1-E.2 operating schedules may become conditions in the permit.)

1	Facility **maximum** operating ($\frac{hours}{day}$): 24	($\frac{days}{week}$): 7	($\frac{weeks}{year}$): 52	($\frac{hours}{year}$): 8,760	
2	Facility's maximum daily operating schedule (if less than 24 $\frac{hours}{day}$)? Start: N/A	☐AM ☐PM	End: N/A	☐AM ☐PM	
3	Month and year of anticipated start of construction: No construction is proposed.				
4	Month and year of anticipated construction completion: No construction is proposed.				
5	Month and year of anticipated startup of new or modified facility: Facility is in operation.				
6	Will this facility operate at this site for more than one year? ☒ Yes ☐ No				

Section 1-F: Other Facility Information

1	Are there any current Notice of Violations (NOV), compliance orders, or any other compliance or enforcement issues related to this facility? ☐ Yes ☒ No If yes, specify: N/A	
a	If yes, NOV date or description of issue: N/A	a
b	Is this application in response to any issue listed in 1-F, 1 or 1a above? ☐ Yes ☒ No If Yes, provide the 1c & 1d info below:	
c	Document Title: N/A	
d	Provide the required text to be inserted in this permit: N/A	
2	Is air quality dispersion modeling or modeling waiver being submitted with this application? ☐ Yes ☒ No	
3	Does this facility require an "Air Toxics" permit under 20.2.72.400 NMAC & 20.2.72.502, Tables A and/or B? ☐ Yes ☒ No	
4	Will this facility be a source of federal Hazardous Air Pollutants (HAP)? ☒ Yes ☐ No	
a	If Yes, what type of source? ☒ **Major** (☒ ≥10 tpy of any single HAP **OR** ☒ ≥25 tpy of any combination of HAPS) **OR** ☐ **Minor** (☐ <10 tpy of any single HAP **AND** ☐ <25 tpy of any combination of HAPS)	
5	Is any unit exempt under 20.2.72.202.B.3 NMAC? ☐ Yes ☒ No	
a	If yes, include the name of company providing commercial electric power to the facility: N/A Commercial power is purchased from a commercial utility company, which specifically does not include power generated on site for the sole purpose of the user.	

Section 1-G: Streamline Application (This section applies to 20.2.72.300 NMAC Streamline applications only)

1	☐ I have filled out Section 18, "Addendum for Streamline Applications."	☑ N/A (This is not a Streamline application.)

Section 1-H: Current Title V Information - Required for all applications from TV Sources

(Title V-source required information for all applications submitted pursuant to 20.2.72 NMAC (Minor Construction Permits), or 20.2.74/20.2.79 NMAC (Major PSD/NNSR applications), and/or 20.2.70 NMAC (Title V))

1	Responsible Official (R.O.) (20.2.70.300.D.2 NMAC): Graham W. Bacon	Phone: 713-381-6595
a	R.O. Title: Executive Vice President	R.O. e-mail: environmental@eprod.com
b	R. O. Address: P.O. Box 4324, Houston, TX 77210	
2	Alternate Responsible Official (20.2.70.300.D.2 NMAC): Ivan W. Zirbes	Phone: 713- 381-6595
a	A. R.O. Title: Vice President	A. R.O. e-mail: environmental@eprod.com
b	A. R. O. Address: P.O. Box 4324, Houston, TX 77210	
3	Company's Corporate or Partnership Relationship to any other Air Quality Permittee (List the names of any companies that have operating (20.2.70 NMAC) permits and with whom the applicant for this permit has a corporate or partnership relationship): N/A	
4	Name of Parent Company ("Parent Company" means the primary name of the organization that owns the company to be permitted wholly or in part.): N/A	
a	Address of Parent Company: N/A	
5	Names of Subsidiary Companies ("Subsidiary Companies" means organizations, branches, divisions or subsidiaries, which are owned, wholly or in part, by the company to be permitted.): N/A	
6	Telephone numbers & names of the owners' agents and site contacts familiar with plant operations: #: N/A	

7	Affected Programs to include Other States, local air pollution control programs (i.e. Bernalillo) and Indian tribes: Will the property on which the facility is proposed to be constructed or operated be closer than 80 km (50 miles) from other states, local pollution control programs, and Indian tribes and pueblos (20.2.70.402.A.2 and 20.2.70.7.B)? If yes, state which ones and provide the distances in kilometers: Yes, Colorado (56 km), Southern Ute Indian Reservation (56 km), Jicarilla Apache Indian Reservation (80 kilometers), Navajo Nation (14 km)

Section 1-I – Submittal Requirements

Each 20.2.73 NMAC (**NOI**), a 20.2.70 NMAC (**Title V**), a 20.2.72 NMAC (**NSR** minor source), or 20.2.74 NMAC (**PSD**) application package shall consist of the following:

Hard Copy Submittal Requirements:

1) One hard copy **original signed and notarized application package** **printed double sided** **'head-to-toe'** **2-hole punched** as we bind the document on top, not on the side; except Section 2 (landscape tables), which should be head-to-head. Please use **numbered tab separators** in the hard copy submittal(s) as this facilitates the review process. For NOI submittals only, hard copies of UA1, Tables 2A, 2D & 2F, Section 3 and the signed Certification Page are required. Please include a copy of the check on a separate page.

2) If the application is for a minor NSR, PSD, NNSR, or Title V application, include one working hard **copy** for Department use. This copy does not need to be 2-hole punched, but **must be double sided**. Minor NSR Technical Permit revisions (20.2.72.219.B NMAC) only need to fill out Sections 1-A, 1-B, 3, and should fill out those portions of other Section(s) relevant to the technical permit revision. TV Minor Modifications need only fill out Sections 1-A, 1-B, 1-H, 3, and those portions of other Section(s) relevant to the minor modification. NMED may require additional portions of the application to be submitted, as needed.

3) The entire NOI or Permit application package, including the full modeling study, should be submitted electronically on compact disk(s) (CD). For permit application submittals, two CD copies are required (in sleeves, not crystal cases, please), with additional CD copies as specified below. NOI applications require only a single CD submittal.

4) If **air dispersion modeling** is required by the application type, include the **NMED Modeling Waiver** **OR** one additional electronic copy of the air dispersion modeling including the input and output files. The dispersion modeling ***summary report only*** should be submitted as hard copy(ies) unless otherwise indicated by the Bureau. The complete dispersion modeling study, including all input/output files, should be submitted electronically as part of the electronic submittal.

5) If subject to PSD review under 20.2.74 NMAC (PSD) or NNSR under 20.2.79 NMC include,
   a. one additional CD copy for US EPA,
   b. one additional CD copy for each federal land manager affected (NPS, USFS, FWS, USDI) and,
   c. one additional CD copy for each affected regulatory agency other than the Air Quality Bureau.

Electronic Submittal Requirements [in addition to the required hard copy(ies)]:

1) All required electronic documents shall be submitted in duplicate (2 separate CDs). A single PDF document of the entire application as submitted and the individual documents comprising the application.

2) The documents should also be submitted in Microsoft Office compatible file format (Word, Excel, etc.) allowing us to access the text and formulas in the documents (copy & paste). Any documents that cannot be submitted in a Microsoft Office compatible format shall be saved as a PDF file from within the electronic document that created the file. If you are unable to provide Microsoft office compatible electronic files or internally generated PDF files of files (items that were not created electronically: i.e. brochures, maps, graphics, etc,), submit these items in hard copy format with the number of additional hard copies corresponding to the number of CD copies required. We must be able to review the formulas and inputs that calculated the emissions.

3) It is preferred that this application form be submitted as 3 electronic files (2 MSWord docs: Universal Application section 1 and Universal Application section 3-19) and 1 Excel file of the tables (Universal Application section 2) on the CD(s). Please include as many of the 3-19 Sections as practical in a single MS Word electronic document. Create separate electronic file(s) if a single file becomes too large or if portions must be saved in a file format other than MS Word.

4) The electronic file names shall be a maximum of 25 characters long (including spaces, if any). The format of the electronic Universal Application shall be in the format: "A-3423-FacilityName". The "A" distinguishes the file as an application submittal, as opposed to other documents the Department itself puts into the database. Thus, all electronic application submittals should begin with "A-". Modifications to existing facilities should use the core permit number (i.e. '3423') the Department assigned to the facility as the next 4 digits. Use 'XXXX' for new facility applications. The format of any separate electronic submittals (additional submittals such as non-Word attachments, re-submittals, application updates) and Section document shall be in the format: "A-3423-9-description", where "9" stands for the section # (in this case Section 9-Public Notice). Please refrain, as much as possible, from submitting any scanned documents as this file format is extremely large, which uses up too much storage capacity in our database. Please take the time to fill out the header information throughout all submittals as this will identify any loose pages, including the Application Date (date submitted) & Revision # (0 for original, 1, 2, etc.; which will help keep track of subsequent partial update(s) to the original submittal. The footer information should not be modified by the applicant.

Table of Contents

Section 1: General Facility Information
Section 2: Tables
Section 3: Application Summary
Section 4: Process Flow Sheet
Section 5: Plot Plan Drawn to Scale
Section 6: All Calculations
Section 7: Information Used to Determine Emissions
Section 8: Map(s)
Section 9: Proof of Public Notice
Section 10: Written Description of the Routine Operations of the Facility
Section 11: Source Determination
Section 12: PSD Applicability Determination for All Sources & Special Requirements for a PSD Application
Section 13: Discussion Demonstrating Compliance with Each Applicable State & Federal Regulation
Section 14: Operational Plan to Mitigate Emissions
Section 15: Alternative Operating Scenarios
Section 16: Air Dispersion Modeling
Section 17: Compliance Test History
Section 18: Addendum for Streamline Applications (streamline applications only)
Section 19: Requirements for the Title V (20.2.70 NMAC) Program (Title V applications only)
Section 20: Other Relevant Information
Section 21: Addendum for Landfill Applications
Section 22: Certification Page

Table 2-A: Regulated Emission Sources

Unit and stack numbering must correspond throughout the application package. If applying for a NOI under 20.2.73 NMAC, equipment exemptions under 2.72.202 NMAC do not apply.

Unit Number[1]	Source Description	Make	Model #	Serial #	Manufacturer's Rated Capacity[3] (Specify Units)	Requested Permitted Capacity[3] (Specify Units)	Date of Manufacture[2] / Date of Construction/ Reconstruction[2]	Controlled by Unit # / Emissions vented to Stack #	Source Classification Code (SCC)	For Each Piece of Equipment, Check One	RICE Ignition Type (CI, SI, 4SLB, 4SRB, 2SLB)[4]	Replacing Unit No.
8-E	Natural Gas Fired Reciprocating Engine	Caterpillar	G3616 SITA	4CG00035	4445 hp	4445 hp	1995 / 1995	A-8	31000203	☑ Existing (unchanged) ☐ To be Removed ☐ New/Additional ☐ Replacement Unit ☐ To Be Modified ☐ To be Replaced	4SLB	N/A
11-E	Natural Gas Fired Reciprocating Engine	Caterpillar	G3616 SITA	4GC00040	4445 hp	4445 hp	1995 / 1995	A-11	31000203	☑ Existing (unchanged) ☐ To be Removed ☐ New/Additional ☐ Replacement Unit ☐ To Be Modified ☐ To be Replaced	4SLB	N/A
12-E	Natural Gas Fired Reciprocating Engine	Clark	TLA-10	79029	3400 hp	3400 hp	1966 / 1996	B-1	31000203	☑ Existing (unchanged) ☐ To be Removed ☐ New/Additional ☐ Replacement Unit ☐ To Be Modified ☐ To be Replaced	2SLB	N/A
13-E	Natural Gas Fired Reciprocating Engine	Clark	TLA-10	79030	3400 hp	3400 hp	1966 / 1996	B-2	31000203	☑ Existing (unchanged) ☐ To be Removed ☐ New/Additional ☐ Replacement Unit ☐ To Be Modified ☐ To be Replaced	2SLB	N/A
14-E	Natural Gas Fired Reciprocating Engine	Clark	TLA-10	79031	3400 hp	3400 hp	1966 / 1996	B-3	31000203	☑ Existing (unchanged) ☐ To be Removed ☐ New/Additional ☐ Replacement Unit ☐ To Be Modified ☐ To be Replaced	2SLB	N/A
17-E	Natural Gas Fired Turbine	General Electric	Frame 5	179577	19500 hp	19500 hp	1970 / 1970	C-1	31000203	☑ Existing (unchanged) ☐ To be Removed ☐ New/Additional ☐ Replacement Unit ☐ To Be Modified ☐ To be Replaced	N/A	N/A
18-T	Natural Gas Fired Turbine	General Electric	Frame 5	214370	19500 hp	19500 hp	1971 / 1971	C-2	31000203	☑ Existing (unchanged) ☐ To be Removed ☐ New/Additional ☐ Replacement Unit ☐ To Be Modified ☐ To be Replaced	N/A	N/A
30	CI RICE Emergency Air Compressor	Detroit Diesel	AV 921	8FF6532	450 hp	450 hp	2005 / 2005	30	20200102	☑ Existing (unchanged) ☐ To be Removed ☐ New/Additional ☐ Replacement Unit ☐ To Be Modified ☐ To be Replaced	CI	N/A
32-E	Natural Gas Fired Reciprocating Engine	Caterpillar	G3608 SITA	4WF00029/KCO579A	2222 hp	2222 hp	1996 / 1996	CRY01-1	31000203	☑ Existing (unchanged) ☐ To be Removed ☐ New/Additional ☐ Replacement Unit ☐ To Be Modified ☐ To be Replaced	4SLB	N/A
33-E	Natural Gas Fired Reciprocating Engine	Caterpillar	G3608 SITA	4WF00030/KCO579B	2222 hp	2222 hp	1996 / 1996	CRY012-1	31000203	☑ Existing (unchanged) ☐ To be Removed ☐ New/Additional ☐ Replacement Unit ☐ To Be Modified ☐ To be Replaced	4SLB	N/A
34-E	Natural Gas Fired Reciprocating Engine	Caterpillar	G3608 SITA	4WF00031/KCO606	2222 hp	2222 hp	1996 / 1996	CRY03-1	31000203	☑ Existing (unchanged) ☐ To be Removed ☐ New/Additional ☐ Replacement Unit ☐ To Be Modified ☐ To be Replaced	4SLB	N/A
35-T	Natural Gas Fired Turbine	Solar	Mars T-15000	MM95701	15000 hp	15000 hp	1996 / 1996	CRY01-2	31000203	☑ Existing (unchanged) ☐ To be Removed ☐ New/Additional ☐ Replacement Unit ☐ To Be Modified ☐ To be Replaced	N/A	N/A
36-T	Natural Gas Fired Turbine	Solar	Mars T-15000	MM95702	15000 hp	15000 hp	1996 / 1996	CRY01-2	31000203	☑ Existing (unchanged) ☐ To be Removed ☐ New/Additional ☐ Replacement Unit ☐ To Be Modified ☐ To be Replaced	N/A	N/A
37-T	Natural Gas Fired Turbine	Solar	Mars T-15000	MM95D97	15000 hp	15000 hp	1996 / 1996	CRY-03-2	31000203	☑ Existing (unchanged) ☐ To be Removed ☐ New/Additional ☐ Replacement Unit ☐ To Be Modified ☐ To be Replaced	N/A	N/A

Unit Number[1]	Source Description	Make	Model #	Serial #	Manufacturer's Rated Capacity[3] (Specify Units)	Requested Permitted Capacity[3] (Specify Units)	Date of Manufacture[2] / Date of Construction/ Reconstruction[2]	Controlled by Unit # / Emissions vented to Stack #	Source Classification Code (SCC)	For Each Piece of Equipment, Check One	RICE Ignition Type (CI, SI, 4SLB, 4SRB, 2SLB)[4]	Replacing Unit No.
42	Inlet and Emergency Flare	Zeeco	UFA-6-24	Unknown	2.27 MMbtu/hr	2.27 MMbtu/hr	1993 / 1993	FLARE1	31000215	☑ Existing (unchanged) ☐ To be Removed ☐ New/Additional ☐ Replacement Unit ☐ To Be Modified ☐ To be Replaced	N/A	N/A
43	Inlet and Emergency Flare	Zeeco	Custom Staged	Unknown	2.27 MMbtu/hr	2.27 MMbtu/hr	1993 / 1993	FLARE2	31000215	☑ Existing (unchanged) ☐ To be Removed ☐ New/Additional ☐ Replacement Unit ☐ To Be Modified ☐ To be Replaced	N/A	N/A
44	Emergency and Cryogenic Plant Process Flare	Flaregas	Custom 18-inch	Unknown	0.45 MMBtu/hr	0.45 MMBtu/hr	1996 / 1996	FLARE3	310000215	☑ Existing (unchanged) ☐ To be Removed ☐ New/Additional ☐ Replacement Unit ☐ To Be Modified ☐ To be Replaced	N/A	N/A
46	Thermal Oxidizer	Callidus	N/A	303-1	10.36 MMscf/d	10.36 MMscf/d	1996 / 1996	TO	31000209	☑ Existing (unchanged) ☐ To be Removed ☐ New/Additional ☐ Replacement Unit ☐ To Be Modified ☐ To be Replaced	N/A	N/A
48	Mole Sieve Regeneration Heater	HRC	6HE-16-6HE-4-8-E	RS01150	7.68 MMBtu/hr	7.68 MMBtu/hr	2002 / 2002	HEAT	2199004002	☑ Existing (unchanged) ☐ To be Removed ☐ New/Additional ☐ Replacement Unit ☐ To Be Modified ☐ To be Replaced	N/A	N/A
49-T	Natural Gas Fired Turbine	Solar	60-7000S with SoLoNOx	TC96925	6039 hp	6039 hp	2003 / 2003	TW	31000203	☑ Existing (unchanged) ☐ To be Removed ☐ New/Additional ☐ Replacement Unit ☐ To Be Modified ☐ To be Replaced	N/A	N/A
50-E	Natural Gas Fired Reciprocating Engine	Caterpillar	G3612 TALE	IYG00054	3550 hp	3550 hp	1994 / 1994	BISTI8b	31000203	☑ Existing (unchanged) ☐ To be Removed ☐ New/Additional ☐ Replacement Unit ☐ To Be Modified ☐ To be Replaced	4SLB	N/A
51a	Glycol Dehydrator Reboiler Burners	Flameco	SB38-24B	0311-517; 0311-516	5.22 MMBtu/hr	5.22 MMBtu/hr	2004 / 2004	TEG	31000302	☑ Existing (unchanged) ☐ To be Removed ☐ New/Additional ☐ Replacement Unit ☐ To Be Modified ☐ To be Replaced	N/A	N/A
51b	Glycol Dehydrator Still Vent/Flash Tank	EVCO Fabrication	EE-8302	3/1/3842	700 MMScf/d	700 MMScf/d	2004 / 2004	44 / FLARE3	31000302	☑ Existing (unchanged) ☐ To be Removed ☐ New/Additional ☐ Replacement Unit ☐ To Be Modified ☐ To be Replaced	N/A	N/A
TK 28	Above Ground Fixed Roof Tank	D&R Tank Company	Unknown	94-11402	4000 bbl	4000 bbl	1994 / 1994	TK 28	231000000	☑ Existing (unchanged) ☐ To be Removed ☐ New/Additional ☐ Replacement Unit ☐ To Be Modified ☐ To be Replaced	N/A	N/A
TK 29	Above Ground Fixed Roof Tank	D&R Tank Company	Unknown	91-11402-2	4000 bbl	4000 bbl	1994 / 1994	TK 29	231000000	☑ Existing (unchanged) ☐ To be Removed ☐ New/Additional ☐ Replacement Unit ☐ To Be Modified ☐ To be Replaced	N/A	N/A
TRUCK	Truck Loading Rack	N/A	N/A	N/A	310,000 bbl/yr	310,000 bbl/yr		TRUCK	40400311	☑ Existing (unchanged) ☐ To be Removed ☐ New/Additional ☐ Replacement Unit ☐ To Be Modified ☐ To be Replaced	N/A	N/A
F-001	Field Gas Fugitives	N/A	N/A	N/A	N/A	N/A	N/A / N/A	F-001	31088811	☑ Existing (unchanged) ☐ To be Removed ☐ New/Additional ☐ Replacement Unit ☐ To Be Modified ☐ To be Replaced	N/A	N/A
F-002	Fuel Gas Fugitives	N/A	N/A	N/A	N/A	N/A	N/A / N/A	F-002	31088811	☑ Existing (unchanged) ☐ To be Removed ☐ New/Additional ☐ Replacement Unit ☐ To Be Modified ☐ To be Replaced	N/A	N/A
F-003	Acid Gas Fugitives	N/A	N/A	N/A	N/A	N/A	N/A / N/A	F-003	310888111	☑ Existing (unchanged) ☐ To be Removed ☐ New/Additional ☐ Replacement Unit ☐ To Be Modified ☐ To be Replaced	N/A	N/A

Unit Number[1]	Source Description	Make	Model #	Serial #	Manufacturer's Rated Capacity[3] (Specify Units)	Requested Permitted Capacity[3] (Specify Units)	Date of Manufacture[2] / Date of Construction/ Reconstruction[2]	Controlled by Unit # / Emissions vented to Stack #	Source Classification Code (SCC)	For Each Piece of Equipment, Check One	RICE Ignition Type (CI, SI, 4SLB, 4SRB, 2SLB)[4]	Replacing Unit No.
F-004	Deethanizer Overheads Fugitives	N/A	N/A	N/A	N/A	N/A	N/A / N/A	F-004	31088811	☑ Existing (unchanged) ☐ To be Removed ☐ New/Additional ☐ Replacement Unit ☐ To Be Modified ☐ To be Replaced	N/A	N/A
F-005	Condensate Fugitives	N/A	N/A	N/A	N/A	N/A	N/A / N/A	F-005	31088811	☑ Existing (unchanged) ☐ To be Removed ☐ New/Additional ☐ Replacement Unit ☐ To Be Modified ☐ To be Replaced	N/A	N/A
F-006	NGL Fugitives	N/A	N/A	N/A	N/A	N/A	N/A / N/A	F-006	31088811	☑ Existing (unchanged) ☐ To be Removed ☐ New/Additional ☐ Replacement Unit ☐ To Be Modified ☐ To be Replaced	N/A	N/A
F-008	Refrigerant Fugitives	N/A	N/A	N/A	N/A	N/A	N/A / N/A	F-008	31088811	☑ Existing (unchanged) ☐ To be Removed ☐ New/Additional ☐ Replacement Unit ☐ To Be Modified ☐ To be Replaced	N/A	N/A
F-009	Tank Fugitives	N/A	N/A	N/A	N/A	N/A	N/A / N/A	F-009	31088811	☑ Existing (unchanged) ☐ To be Removed ☐ New/Additional ☐ Replacement Unit ☐ To Be Modified ☐ To be Replaced	N/A	N/A
CT-B	B Plant Cooling Tower	N/A	N/A	N/A	28500 gal/min	28500 gal/min	1957 / 1957	CT-B	30620702	☑ Existing (unchanged) ☐ To be Removed ☐ New/Additional ☐ Replacement Unit ☐ To Be Modified ☐ To be Replaced	N/A	N/A
CT-C	C Plant Cooling Tower	N/A	N/A	N/A	9000 gal/min	9000 gal/min	1957 / 1957	CT-C	30600702	☑ Existing (unchanged) ☐ To be Removed ☐ New/Additional ☐ Replacement Unit ☐ To Be Modified ☐ To be Replaced	N/A	N/A
BT 1, 2, 3, 4	Produced Water Tanks	N/A	N/A	N/A	400 bbl (ea)	400 bbl (ea)	N/A / 2010	BT 1-4	40400316	☑ Existing (unchanged) ☐ To be Removed ☐ New/Additional ☐ Replacement Unit ☐ To Be Modified ☐ To be Replaced	N/A	N/A
AM-01	Amine Unit	N/A	N/A	N/A	N/A	N/A	Unknown / <8/23/2011	46, 44 / 46, 44	31000201	☑ Existing (unchanged) ☐ To be Removed ☐ New/Additional ☐ Replacement Unit ☐ To Be Modified ☐ To be Replaced	N/A	N/A
M1	Malfunction	N/A	N/A	N/A	N/A	N/A	N/A / N/A	N/A	N/A	☑ Existing (unchanged) ☐ To be Removed ☐ New/Additional ☐ Replacement Unit ☐ To Be Modified ☐ To be Replaced	N/A	N/A

[1] Unit numbers must correspond to unit numbers in the previous permit unless a complete cross reference table of all units in both permits is provided.

[2] Specify dates required to determine regulatory applicability.

[3] To properly account for power conversion efficiencies, generator set rated capacity shall be reported as the rated capacity of the engine in horsepower, not the kilowatt capacity of the generator set.

[4] "4SLB" means four stroke lean burn engine, "4SRB" means four stroke rich burn engine, "2SLB" means two stroke lean burn engine, "CI" means compression ignition, and "SI" means spark ignition

Table 2-B: Insignificant Activities[1] (20.2.70 NMAC) OR Exempted Equipment (20.2.72 NMAC)

All 20.2.70 NMAC (Title V) applications must list all Insignificant Activities in this table. All 20.2.72 NMAC applications must list Exempted Equipment in this table. If equipment listed on this table is exempt under 20.2.72.202.B.5, include emissions calculations and emissions totals for 202.B.5 "similar functions" units, operations, and activities in Section 6, Calculations. Equipment and activities exempted under 20.2.72.202 NMAC may not necessarily be Insignificant under 20.2.70 NMAC (and vice versa). Unit & stack numbering must be consistent throughout the application package. Per Exemptions Policy 02-012.00 (see http://www.env.nm.gov/aqb/permit/aqb_pol.html), 20.2.72.202.B NMAC Exemptions do not apply, but 20.2.72.202.A NMAC exemptions do apply to NOI facilities under 20.2.73 NMAC. List 20.2.72.301.D.4 NMAC Auxiliary Equipment for Streamline applications in Table 2-A. The List of Insignificant Activities (for TV) can be found online at http://www.env.nm.gov/aqb/forms/InsignificantListTitleV.pdf . TV sources may elect to enter both TV Insignificant Activities and Part 72 Exemptions on this form.

Unit Number	Source Description	Manufacturer	Model No. / Serial No.	Max Capacity / Capacity Units	List Specific 20.2.72.202 NMAC Exemption (e.g. 20.2.72.202.B.5) / Insignificant Activity citation (e.g. IA List Item #1.a)	Date of Manufacture /Reconstruction[2] / Date of Installation /Construction[2]	For Each Piece of Equipment, Check One
8-C	Compressor for Unit 8	(unknown)	(unknown)	N/A	Not a source of regulated pollutants	(unknown)	☑ Existing (unchanged) ☐ To be Removed ☐ New/Additional ☐ Replacement Unit ☐ To Be Modified ☐ To be Replaced
			(unknown)	N/A	Not a source of regulated pollutants	< 8/23/2011	
11-C	Compressor for Unit 11	(unknown)	(unknown)	N/A	Not a source of regulated pollutants	(unknown)	☑ Existing (unchanged) ☐ To be Removed ☐ New/Additional ☐ Replacement Unit ☐ To Be Modified ☐ To be Replaced
			(unknown)	N/A	Not a source of regulated pollutants	< 8/23/2011	
12-C	Compressor for Unit 12	(unknown)	(unknown)	N/A	Not a source of regulated pollutants	(unknown)	☑ Existing (unchanged) ☐ To be Removed ☐ New/Additional ☐ Replacement Unit ☐ To Be Modified ☐ To be Replaced
			(unknown)	N/A	Not a source of regulated pollutants	< 8/23/2011	
13-C	Compressor for Unit 13	(unknown)	(unknown)	N/A	Not a source of regulated pollutants	(unknown)	☑ Existing (unchanged) ☐ To be Removed ☐ New/Additional ☐ Replacement Unit ☐ To Be Modified ☐ To be Replaced
			(unknown)	N/A	Not a source of regulated pollutants	< 8/23/2011	
14-C	Compressor for Unit 14	(unknown)	(unknown)	N/A	Not a source of regulated pollutants	(unknown)	☑ Existing (unchanged) ☐ To be Removed ☐ New/Additional ☐ Replacement Unit ☐ To Be Modified ☐ To be Replaced
			(unknown)	N/A	Not a source of regulated pollutants	< 8/23/2011	
17-C	Compressor for Unit 17	(unknown)	(unknown)	N/A	Not a source of regulated pollutants	(unknown)	☑ Existing (unchanged) ☐ To be Removed ☐ New/Additional ☐ Replacement Unit ☐ To Be Modified ☐ To be Replaced
			(unknown)	N/A	Not a source of regulated pollutants	< 8/23/2011	
18-C	Compressor for Unit 18	(unknown)	(unknown)	N/A	Not a source of regulated pollutants	(unknown)	☑ Existing (unchanged) ☐ To be Removed ☐ New/Additional ☐ Replacement Unit ☐ To Be Modified ☐ To be Replaced
			(unknown)	N/A	Not a source of regulated pollutants	< 8/23/2011	
32-C	Compressor for Unit 32	(unknown)	(unknown)	N/A	Not a source of regulated pollutants	(unknown)	☑ Existing (unchanged) ☐ To be Removed ☐ New/Additional ☐ Replacement Unit ☐ To Be Modified ☐ To be Replaced
			(unknown)	N/A	Not a source of regulated pollutants	< 8/23/2011	
33-C	Compressor for Unit 33	(unknown)	(unknown)	N/A	Not a source of regulated pollutants	(unknown)	☑ Existing (unchanged) ☐ To be Removed ☐ New/Additional ☐ Replacement Unit ☐ To Be Modified ☐ To be Replaced
			(unknown)	N/A	Not a source of regulated pollutants	< 8/23/2011	
34-C	Compressor for Unit 34	(unknown)	(unknown)	N/A	Not a source of regulated pollutants	(unknown)	☑ Existing (unchanged) ☐ To be Removed ☐ New/Additional ☐ Replacement Unit ☐ To Be Modified ☐ To be Replaced
			(unknown)	N/A	Not a source of regulated pollutants	< 8/23/2011	
35-C	Compressor for Unit 35	(unknown)	(unknown)	N/A	Not a source of regulated pollutants	(unknown)	☑ Existing (unchanged) ☐ To be Removed ☐ New/Additional ☐ Replacement Unit ☐ To Be Modified ☐ To be Replaced
			(unknown)	N/A	Not a source of regulated pollutants	< 8/23/2011	
36-C	Compressor for Unit 36	(unknown)	(unknown)	N/A	Not a source of regulated pollutants	(unknown)	☑ Existing (unchanged) ☐ To be Removed ☐ New/Additional ☐ Replacement Unit ☐ To Be Modified ☐ To be Replaced
			(unknown)	N/A	Not a source of regulated pollutants	< 8/23/2011	
37-C	Compressor for Unit 37	(unknown)	(unknown)	N/A	Not a source of regulated pollutants	(unknown)	☑ Existing (unchanged) ☐ To be Removed ☐ New/Additional ☐ Replacement Unit ☐ To Be Modified ☐ To be Replaced
			(unknown)	N/A	Not a source of regulated pollutants	< 8/23/2011	
49-C	Compressor for Unit 49	(unknown)	(unknown)	N/A	Not a source of regulated pollutants	(unknown)	☑ Existing (unchanged) ☐ To be Removed ☐ New/Additional ☐ Replacement Unit ☐ To Be Modified ☐ To be Replaced
			(unknown)	N/A	Not a source of regulated pollutants	< 8/23/2011	
50-C	Compressor for Unit 50	(unknown)	(unknown)	N/A	Not a source of regulated pollutants	(unknown)	☑ Existing (unchanged) ☐ To be Removed ☐ New/Additional ☐ Replacement Unit ☐ To Be Modified ☐ To be Replaced
			(unknown)	N/A	Not a source of regulated pollutants	< 8/23/2011	

Unit Number	Source Description	Manufacturer	Model No. / Serial No.	Max Capacity / Capacity Units	List Specific 20.2.72.202 NMAC Exemption (e.g. 20.2.72.202.B.5) / Insignificant Activity citation (e.g. IA List Item #1.a)	Date of Manufacture /Reconstruction[2] / Date of Installation /Construction[2]	For Each Piece of Equipment, Check One
TK 1	Unleaded Gasoline	(unknown)	(unknown)	24	20.2.72.202.A (3)	(unknown)	☑ Existing (unchanged) ☐ To be Removed ☐ New/Additional ☐ Replacement Unit ☐ To Be Modified ☐ To be Replaced
			(unknown)	bbl	IA List Item #8	(unknown)	
TK 3	Non-exempt Water	(unknown)	(unknown)	1000	20.2.72.202.B (2)	(unknown)	☑ Existing (unchanged) ☐ To be Removed ☐ New/Additional ☐ Replacement Unit ☐ To Be Modified ☐ To be Replaced
			(unknown)	bbl	IA List Item #5	(unknown)	
TK 4	Produced Water	(unknown)	(unknown)	219	20.2.72.202.B (2)	(unknown)	☑ Existing (unchanged) ☐ To be Removed ☐ New/Additional ☐ Replacement Unit ☐ To Be Modified ☐ To be Replaced
			(unknown)	bbl	IA List Item #5	(unknown)	
TK 5	Methanol	(unknown)	(unknown)	2	20.2.72.202.B.5	(unknown)	☑ Existing (unchanged) ☐ To be Removed ☐ New/Additional ☐ Replacement Unit ☐ To Be Modified ☐ To be Replaced
			(unknown)	bbl	IA List Item #1	(unknown)	
TK 6	TEG	(unknown)	(unknown)	90	20.2.72.202.B.5	(unknown)	☑ Existing (unchanged) ☐ To be Removed ☐ New/Additional ☐ Replacement Unit ☐ To Be Modified ☐ To be Replaced
			(unknown)	bbl	IA List Item #1	(unknown)	
TK 7	VRU Bullet Condensate	(unknown)	(unknown)	2,176	N/A	(unknown)	☑ Existing (unchanged) ☐ To be Removed ☐ New/Additional ☐ Replacement Unit ☐ To Be Modified ☐ To be Replaced
			(unknown)	bbl	Not a source of regulated pollutants	(unknown)	
TK 8a,b,c	54GC (Proprietary Liquid)	(unknown)	(unknown)	4	20.2.72.202.B (2)	(unknown)	☑ Existing (unchanged) ☐ To be Removed ☐ New/Additional ☐ Replacement Unit ☐ To Be Modified ☐ To be Replaced
			(unknown)	bbl	IA List Item #5	(unknown)	
TK 10	Lube Oil	(unknown)	(unknown)	210	20.2.72.202.B (2)	(unknown)	☑ Existing (unchanged) ☐ To be Removed ☐ New/Additional ☐ Replacement Unit ☐ To Be Modified ☐ To be Replaced
			(unknown)	bbl	IA List Item #5	(unknown)	
TK 11	Lube Oil	(unknown)	(unknown)	80	20.2.72.202.B (2)	(unknown)	☑ Existing (unchanged) ☐ To be Removed ☐ New/Additional ☐ Replacement Unit ☐ To Be Modified ☐ To be Replaced
			(unknown)	bbl	IA List Item #5	(unknown)	
TK 12	Lube Oil	(unknown)	(unknown)	208	20.2.72.202.B (2)	(unknown)	☑ Existing (unchanged) ☐ To be Removed ☐ New/Additional ☐ Replacement Unit ☐ To Be Modified ☐ To be Replaced
			(unknown)	bbl	IA List Item #5	(unknown)	
TK 13	Diesel Fuel	(unknown)	(unknown)	24	20.2.72.202.B (2)	(unknown)	☑ Existing (unchanged) ☐ To be Removed ☐ New/Additional ☐ Replacement Unit ☐ To Be Modified ☐ To be Replaced
			(unknown)	bbl	IA List Item #5	(unknown)	
TK14	Sulferic Acid	(unknown)	(unknown)	13	20.2.72.202.B (2)	(unknown)	☑ Existing (unchanged) ☐ To be Removed ☐ New/Additional ☐ Replacement Unit ☐ To Be Modified ☐ To be Replaced
			(unknown)	bbl	IA List Item #5	(unknown)	
TK 15	Biocide	(unknown)	(unknown)	18	N/A	(unknown)	☑ Existing (unchanged) ☐ To be Removed ☐ New/Additional ☐ Replacement Unit ☐ To Be Modified ☐ To be Replaced
			(unknown)	bbl	Not a source of regulated pollutants	(unknown)	
TK 16	Bleach/pH Balance	(unknown)	(unknown)	19	N/A	(unknown)	☑ Existing (unchanged) ☐ To be Removed ☐ New/Additional ☐ Replacement Unit ☐ To Be Modified ☐ To be Replaced
			(unknown)	bbl	Not a source of regulated pollutants	(unknown)	
TK 21	Methanol	(unknown)	(unknown)	12	20.2.72.202.B.5	(unknown)	☑ Existing (unchanged) ☐ To be Removed ☐ New/Additional ☐ Replacement Unit ☐ To Be Modified ☐ To be Replaced
			(unknown)	bbl	IA List Item #1	(unknown)	
TK22	Used Oil	(unknown)	(unknown)	24	20.2.72.202.B(2)	(unknown)	☑ Existing (unchanged) ☐ To be Removed ☐ New/Additional ☐ Replacement Unit ☐ To Be Modified ☐ To be Replaced
			(unknown)	bbl	IA List Item #5	(unknown)	
TK 23a,b,c	Used Oil	(unknown)	(unknown)	24	20.2.72.202.B(2)	(unknown)	☑ Existing (unchanged) ☐ To be Removed ☐ New/Additional ☐ Replacement Unit ☐ To Be Modified ☐ To be Replaced
			(unknown)	bbl	IA List Item #5	(unknown)	

Unit Number	Source Description	Manufacturer	Model No. / Serial No.	Max Capacity / Capacity Units	List Specific 20.2.72.202 NMAC Exemption (e.g. 20.2.72.202.B.5) / Insignificant Activity citation (e.g. IA List Item #1.a)	Date of Manufacture /Reconstruction[2] / Date of Installation /Construction[2]	For Each Piece of Equipment, Check One
TK 24 a-e	Methanol	(unknown)	(unknown)	2179	N/A	(unknown)	☑ Existing (unchanged) ☐ To be Removed ☐ New/Additional ☐ Replacement Unit ☐ To Be Modified ☐ To be Replaced
			(unknown)	bbl	N/A - Not in service	(unknown)	
TK 25 a-p	Y-Crude NGL	(unknown)	(unknown)	2500	N/A - Not in service	(unknown)	☑ Existing (unchanged) ☐ To be Removed ☐ New/Additional ☐ Replacement Unit ☐ To Be Modified ☐ To be Replaced
			(unknown)	bbl	N/A - Not in service	(unknown)	
TK 30	Lube Oil	(unknown)	(unknown)	12	20.2.72.202.B(2)	(unknown)	☑ Existing (unchanged) ☐ To be Removed ☐ New/Additional ☐ Replacement Unit ☐ To Be Modified ☐ To be Replaced
			(unknown)	bbl	IA List Item #5	(unknown)	
TK 31	Lube Oil	(unknown)	(unknown)	12	20.2.72.202.B(2)	(unknown)	☑ Existing (unchanged) ☐ To be Removed ☐ New/Additional ☐ Replacement Unit ☐ To Be Modified ☐ To be Replaced
			(unknown)	bbl	IA List Item #5	(unknown)	
TK 32a,b,c	Lube Oil	(unknown)	(unknown)	208	20.2.72.202.B(2)	1957	☑ Existing (unchanged) ☐ To be Removed ☐ New/Additional ☐ Replacement Unit ☐ To Be Modified ☐ To be Replaced
			(unknown)	bbl	IA List Item #5	1957	
TK 34	Lube Oil	(unknown)	(unknown)	107	20.2.72.202.B(2)	(unknown)	☑ Existing (unchanged) ☐ To be Removed ☐ New/Additional ☐ Replacement Unit ☐ To Be Modified ☐ To be Replaced
			(unknown)	bbl	IA List Item #5	(unknown)	
TK 36	Corrosion Inhibitor	(unknown)	(unknown)	3	N/A	(unknown)	☑ Existing (unchanged) ☐ To be Removed ☐ New/Additional ☐ Replacement Unit ☐ To Be Modified ☐ To be Replaced
			(unknown)	bbl	Not a source of regulated pollutants	(unknown)	
TK 37a,b	Lube Oil	(unknown)	(unknown)	8	20.2.72.202.B(2)	(unknown)	☑ Existing (unchanged) ☐ To be Removed ☐ New/Additional ☐ Replacement Unit ☐ To Be Modified ☐ To be Replaced
			(unknown)	bbl	IA List Item #5	(unknown)	
TK 38	Diesel Fuel	(unknown)	(unknown)	12	20.2.72.202.B(2)	(unknown)	☑ Existing (unchanged) ☐ To be Removed ☐ New/Additional ☐ Replacement Unit ☐ To Be Modified ☐ To be Replaced
			(unknown)	bbl	IA List Item #5	(unknown)	
TK 39	Solvent	(unknown)	(unknown)	12	20.2.72.202.B(2)	(unknown)	☑ Existing (unchanged) ☐ To be Removed ☐ New/Additional ☐ Replacement Unit ☐ To Be Modified ☐ To be Replaced
			(unknown)	bbl	IA List Item #5	(unknown)	
TK 40	Ambitrol	(unknown)	(unknown)	7	20.2.72.202.B(2)	(unknown)	☑ Existing (unchanged) ☐ To be Removed ☐ New/Additional ☐ Replacement Unit ☐ To Be Modified ☐ To be Replaced
			(unknown)	bbl	IA List Item #5	(unknown)	
TK 41	Bleach/pH Balance	(unknown)	(unknown)	12	N/A	(unknown)	☑ Existing (unchanged) ☐ To be Removed ☐ New/Additional ☐ Replacement Unit ☐ To Be Modified ☐ To be Replaced
			(unknown)	bbl	Not a source of regulated pollutants	(unknown)	
TK 42	Bromine	(unknown)	(unknown)	9.5	N/A	(unknown)	☑ Existing (unchanged) ☐ To be Removed ☐ New/Additional ☐ Replacement Unit ☐ To Be Modified ☐ To be Replaced
			(unknown)	bbl	Not a source of regulated pollutants	(unknown)	
TK 43	Cooling Water Treatment	(unknown)	(unknown)	9.8	N/A	(unknown)	☑ Existing (unchanged) ☐ To be Removed ☐ New/Additional ☐ Replacement Unit ☐ To Be Modified ☐ To be Replaced
			(unknown)	bbl	Not a source of regulated pollutants	(unknown)	
TK 44	Acid	(unknown)	(unknown)	12	N/A	(unknown)	☑ Existing (unchanged) ☐ To be Removed ☐ New/Additional ☐ Replacement Unit ☐ To Be Modified ☐ To be Replaced
			(unknown)	bbl	Not a source of regulated pollutants	(unknown)	
TK 45	Methyl Diethanolamine (MDEA)	(unknown)	(unknown)	476	N/A	(unknown)	☑ Existing (unchanged) ☐ To be Removed ☐ New/Additional ☐ Replacement Unit ☐ To Be Modified ☐ To be Replaced
			(unknown)	bbl	Not a source of regulated pollutants	(unknown)	
TK 46	Used Oil	(unknown)	(unknown)	24	20.2.72.202.B(2)	(unknown)	☑ Existing (unchanged) ☐ To be Removed ☐ New/Additional ☐ Replacement Unit ☐ To Be Modified ☐ To be Replaced
			(unknown)	bbl	IA List Item #5	(unknown)	
TK 47	Oil/Water Separator	(unknown)	(unknown)	24	20.2.72.202.B(2)	(unknown)	☑ Existing (unchanged) ☐ To be Removed ☐ New/Additional ☐ Replacement Unit ☐ To Be Modified ☐ To be Replaced
			(unknown)	bbl	IA List Item #5	(unknown)	

Unit Number	Source Description	Manufacturer	Model No. / Serial No.	Max Capacity / Capacity Units	List Specific 20.2.72.202 NMAC Exemption (e.g. 20.2.72.202.B.5) / Insignificant Activity citation (e.g. IA List Item #1.a)	Date of Manufacture /Reconstruction[2] / Date of Installation /Construction[2]	For Each Piece of Equipment, Check One
TK 48	Bromine	(unknown)	(unknown)	10	N/A	(unknown)	☑ Existing (unchanged) ☐ To be Removed ☐ New/Additional ☐ Replacement Unit ☐ To Be Modified ☐ To be Replaced
			(unknown)	bbl	Not a source of regulated pollutants	(unknown)	
TK 52	Water	1995	(unknown)	238	N/A	(unknown)	☑ Existing (unchanged) ☐ To be Removed ☐ New/Additional ☐ Replacement Unit ☐ To Be Modified ☐ To be Replaced
			(unknown)	bbl	Not a source of regulated pollutants	(unknown)	
TK 53	Water	1995	(unknown)	238	N/A	(unknown)	☑ Existing (unchanged) ☐ To be Removed ☐ New/Additional ☐ Replacement Unit ☐ To Be Modified ☐ To be Replaced
			(unknown)	bbl	Not a source of regulated pollutants	(unknown)	
TK 54	Deionized Water	1995	(unknown)	238	N/A	(unknown)	☑ Existing (unchanged) ☐ To be Removed ☐ New/Additional ☐ Replacement Unit ☐ To Be Modified ☐ To be Replaced
			(unknown)	bbl	Not a source of regulated pollutants	(unknown)	
TK 55	Deionized Water	1995	(unknown)	238	N/A	(unknown)	☑ Existing (unchanged) ☐ To be Removed ☐ New/Additional ☐ Replacement Unit ☐ To Be Modified ☐ To be Replaced
			(unknown)	bbl	Not a source of regulated pollutants	(unknown)	
AMINE SUMP	Amine Unit MDEA / Wastewater Sump	< 2011	N/A	N/A	N/A	N/A	☑ Existing (unchanged) ☐ To be Removed ☐ New/Additional ☐ Replacement Unit ☐ To Be Modified ☐ To be Replaced
			N/A	N/A	N/A	N/A	

[1] Insignificant activities exempted due to size or production rate are defined in 20.2.70.300.D.6, 20.2.70.7.Q NMAC, and the NMED/AQB List of Insignificant Activities, dated September 15, 2008. Emissions from these insignificant activities do not need to be reported, unless specifically requested.

[2] Specify date(s) required to determine regulatory applicability.

Table 2-C: Emissions Control Equipment

Unit and stack numbering must correspond throughout the application package. Only list control equipment for TAPs if the TAP's maximum uncontrolled emissions rate is over its respective threshold as listed in 20.2.72 NMAC, Subpart V, Tables A and B. In accordance with 20.2.72.203.A(3) and (8) NMAC, 20.2.70.300.D(5)(b) and (e) NMAC, and 20.2.73.200.B(7) NMAC, the permittee shall report all control devices and list each pollutant controlled by the control device regardless if the applicant takes credit for the reduction in emissions.

Control Equipment Unit No.	Control Equipment Description	Date Installed	Controlled Pollutant(s)	Controlling Emissions for Unit Number(s)[1]	Efficiency (% Control by Weight)	Method used to Estimate Efficiency
8	Catalytic Converter (oxidation)	1995	CO & VOC, HAPs	8	90% CO, 65% VOC	Manufacturer's Data
11	Catalytic Converter (oxidation)	1995	CO & VOC, HAPs	11	90% CO, 65% VOC	Manufacturer's Data
13	Catalytic Converter (oxidation)	1995	CO & VOC, HAPs	13	90% CO	Manufacturer's Data
32	Catalytic Converter (oxidation)	1996	CO & VOC, HAPs	32	90% CO, 65% VOC	Manufacturer's Data
33	Catalytic Converter (oxidation)	1996	CO & VOC, HAPs	33	90% CO, 65% VOC	Manufacturer's Data
34	Catalytic Converter (oxidation)	2005	CO & VOC, HAPs	34	90% CO, 65% VOC	Manufacturer's Data
50	Catalytic Converter (oxidation)	2005	CO & VOC, HAPs	50	90% CO, 65% VOC	Manufacturer's Data
44	Flare	1996	VOCs, H_2S, HAPs	51b (regenerator vent), AM-01 (flash tank vent), SSM from Unit 46 and Cryo Plant, SSM full-capacity testing, and emergency use	98% VOC, H_2S	Engineering judgment
42	Flare	1993	VOCs, H2S, HAPs	Emergency flare; SSM blowdown from 8, 11-14, 32-37, 49, and 50	98% VOC, H_2S	Engineering judgment
43	Flare	1996	VOCs, H2S, HAPs	Emergency flare, SSM blowdown from 8, 11-14, 32-37, 49, and 50	98% VOC, H_2S	Engineering judgment
46	Thermal Oxidizer	1999	VOCs, H2S, HAPs	AM-01 Amine Acid Gas (regenerator vent)	98% VOC, H_2S	Engineering judgment
VRU	Vapor Recovery Unit	2004	VOCs, HAPs	Facility inlet stabilized condensate flash gas (TK-28 and TK-29)	98% + VOC	Engineering judgment

[1] List each control device on a separate line. For each control device, list all emission units controlled by the control device.

Table 2-D: Maximum Emissions (under normal operating conditions)

☐ **This Table was intentionally left blank because it would be identical to Table 2-E.**

Maximum Emissions are the emissions at maximum capacity and prior to (in the absence of) pollution control, emission-reducing process equipment, or any other emission reduction. Calculate the hourly emissions using the worst case hourly emissions for each pollutant. For each pollutant, calculate the annual emissions as if the facility were operating at maximum plant capacity without pollution controls for 8760 hours per year, unless otherwise approved by the Department. List Hazardous Air Pollutants (HAP) & Toxic Air Pollutants (TAPs) in Table 2-I. Unit & stack numbering must be consistent throughout the application package. Fill all cells in this table with the emission numbers or a "-" symbol. A "-" symbol indicates that emissions of this pollutant are not expected. Numbers shall be expressed to at least 2 decimal points (e.g. 0.41, 1.41, or 1.41E-4).

Unit No.	NOx		CO		VOC		SOx		TSP[2]		PM10[1]		PM2.5[1]		H_2S		Lead	
	lb/hr	ton/yr	lb/hr	ton/yr	lb/hr	ton/yr	lb/hr	ton/yr	lb/hr	ton/yr	lb/hr	ton/yr	lb/hr	ton/yr	lb/hr	ton/yr	lb/hr	ton/yr
8	6.44	28.22	17.49	76.61	4.60	20.16	0.44	1.91	N/A	N/A	0.59	2.58	0.59	2.58	-	-	-	-
11	6.44	28.22	17.49	76.61	4.60	20.16	0.44	1.91	N/A	N/A	0.59	2.58	0.59	2.58	-	-	-	-
12	99.40	435.37	17.24	75.51	2.48	10.86	0.43	1.87	N/A	N/A	1.12	4.91	1.12	4.91	-	-	-	-
13	99.40	435.37	17.24	75.51	2.48	10.86	0.43	1.87	N/A	N/A	1.12	4.91	1.12	4.91	-	-	-	-
14	99.40	435.37	17.24	75.51	2.48	10.86	0.43	1.87	N/A	N/A	1.12	4.91	1.12	4.91	-	-	-	-
17	78.52	343.90	31.48	137.89	0.70	3.08	2.08	9.09	N/A	N/A	1.03	4.53	1.03	4.53	-	-	-	-
18	78.52	343.90	31.48	137.89	0.70	3.08	2.08	9.09	N/A	N/A	1.03	4.53	1.03	4.53	-	-	-	-
30	13.95	61.10	3.01	13.17	1.13	4.96	0.92	4.04	N/A	N/A	0.99	4.34	0.99	4.34	-	-	-	-
32	4.60	20.16	8.74	38.30	2.30	10.08	0.23	1.01	N/A	N/A	0.29	1.29	0.29	1.29	-	-	-	-
33	4.60	20.16	8.74	38.30	2.30	10.08	0.23	1.01	N/A	N/A	0.29	1.29	0.29	1.29	-	-	-	-
34	4.60	20.16	8.74	38.30	2.30	10.08	0.23	1.01	N/A	N/A	0.29	1.29	0.29	1.29	-	-	-	-
35	76.16	333.60	2.37	10.40	0.24	1.03	1.45	6.34	N/A	N/A	0.75	3.30	0.75	3.30	-	-	-	-
36	76.16	333.60	2.37	10.40	0.24	1.03	1.45	6.34	N/A	N/A	0.75	3.30	0.75	3.30	-	-	-	-
37	76.16	333.60	2.37	10.40	0.24	1.03	1.45	6.34	N/A	N/A	0.75	3.30	0.75	3.30	-	-	-	-
42/43	5.18	22.69	10.34	45.30	1.52	6.66	0.0034	0.015	N/A	N/A	-	-	-	-	1.43E-04	6.26E-04	-	-
44	5.41	23.68	10.79	47.28	11.59	50.77	0.0034	0.015	N/A	N/A	-	-	-	-	1.43E-04	6.26E-04	-	-
46	4.50	19.71	1.30	5.69	0.10	0.44	6.40	28.03	N/A	N/A	-	-	-	-	0.41	1.82	-	-
48	1.89	1.79	1.79	7.85	0.088	0.39	0.15	0.67	N/A	N/A	0.057	0.25	0.057	0.25	-	-	-	-
49	7.97	34.91	5.78	25.32	0.17	0.74	0.75	3.29	N/A	N/A	0.39	1.69	0.39	1.69	-	-	-	-
50	5.15	22.54	18.38	80.51	6.84	29.95	0.36	1.57	N/A	N/A	0.24	1.06	0.24	1.06	-	-	-	-
51a	0.58	2.54	0.49	2.13	0.03	0.14	0.08	0.36	N/A	N/A	0.080	0.35	0.080	0.35	-	-	-	-
51b	-	-	-	-	11.18	48.96	-	-	N/A	N/A	-	-	-	-	-	-	-	-
TK 28	-	-	-	-	5.94	26.00	-	-	N/A	N/A	-	-	-	-	-	-	-	-
TK 29	-	-	-	-	5.94	26.00	-	-	N/A	N/A	-	-	-	-	-	-	-	-
F-001	-	-	-	-	3.60	15.78	-	-	N/A	N/A	-	-	-	-	-	-	-	-
F-002	-	-	-	-	0.091	0.40	-	-	N/A	N/A	-	-	-	-	-	-	-	-
F-003	-	-	-	-	0.053	0.23	-	-	N/A	N/A	-	-	-	-	-	-	-	-
F-004	-	-	-	-	0.39	1.72	-	-	N/A	N/A	-	-	-	-	-	-	-	-
F-005	-	-	-	-	3.61	15.80	-	-	N/A	N/A	-	-	-	-	-	-	-	-
F-006	-	-	-	-	9.16	40.12	-	-	N/A	N/A	-	-	-	-	-	-	-	-
F-008	-	-	-	-	4.04	17.70	-	-	N/A	N/A	-	-	-	-	-	-	-	-
F-009	-	-	-	-	0.015	0.067	-	-	N/A	N/A	-	-	-	-	-	-	-	-
CT-B	-	-	-	-	-	-	-	-	N/A	N/A	0.80	3.50	0.0091	0.040	-	-	-	-
CT-C	-	-	-	-	-	-	-	-	N/A	N/A	0.25	1.10	0.0029	0.013	-	-	-	-

Unit No.	NOx		CO		VOC		SOx		TSP[2]		PM10[1]		PM2.5[1]		H_2S		Lead	
	lb/hr	ton/yr	lb/hr	ton/yr	lb/hr	ton/yr	lb/hr	ton/yr	lb/hr	ton/yr	lb/hr	ton/yr	lb/hr	ton/yr	lb/hr	ton/yr	lb/hr	ton/yr
BT 1-4	-	-	-	-	0.57	2.51	-	-	N/A	N/A	-	-	-	-	-	-	-	-
TRUCK	-	-	-	-	42.53	30.62	-	-	N/A	N/A	-	-	-	-	-	-	-	-
M1	-	-	-	-	*	10.00	-	-	N/A	N/A	-	-	-	-	-	-	-	-
42/43 SSM	22.43	2.70	44.78	5.39	6.51	0.78	1.56E-04	6.85E-04	N/A	N/A	-	-	-	-	-	-	-	-
44 SSM	54.88	8.24	109.56	1.35	10.87	1.35	10.93	1.35	N/A	N/A	-	-	-	-	-	-	-	-
SSM BD	-	-	-	-	164.98	0.71	-	-	N/A	N/A	-	-	-	-	-	-	-	-
Totals	**832.35**	**3311.55**	**389.24**	**1035.60**	**316.61**	**445.18**	**30.94**	**89.02**	**N/A**	**N/A**	**12.56**	**55.02**	**11.52**	**50.47**	**0.42**	**1.82**	**-**	**-**

[1] **Condensable Particulate Matter:** Include condensable particulate matter emissions for PM10 and PM2.5 if the source is a combustion source. Do not include condensable particulate matter for TSP unless TSP is set equal to PM10 and PM2.5.

[2] The TSP NMAAQS was repealed on 11/30/2018.

Malfunction Emissions: Per "Implementation Guidance for Permitting SSM Emissions and Excess Emissions" document issued 10 January 2011, instead of permitting SSM and upset/malfunction emissions separately, the applicant may request that emissions from both SSM and upset/malfunction be consolidated in the permit with a total limit of 10 tons per year per facility for the combined category to reduce concerns about the appropriateness of activities listed as SSM.

Table 2-E: Requested Allowable Emissions

Unit & stack numbering must be consistent throughout the application package. Fill all cells in this table with the emission numbers or a "-" symbol. A "-" symbol indicates that emissions of this pollutant are not expected. Numbers shall be expressed to at least 2 decimal points (e.g. 0.41, 1.41, or $1.41E^{-4}$).

Unit No.	NOx		CO		VOC		SOx		TSP[3]		PM10[1]		PM2.5[1]		H_2S		Lead	
	lb/hr	ton/yr	lb/hr	ton/yr	lb/hr	ton/yr	lb/hr	ton/yr	lb/hr	ton/yr	lb/hr	ton/yr	lb/hr	ton/yr	lb/hr	ton/yr	lb/hr	ton/yr
8	6.44	28.22	1.77	7.74	1.61	7.74	0.44	1.91	N/A	N/A	0.59	2.58	0.59	2.58	-	-	-	-
11	6.44	28.22	1.77	7.74	1.61	7.74	0.44	1.91	N/A	N/A	0.59	2.58	0.59	2.58	-	-	-	-
12	49.70	217.69	17.24	75.51	2.48	10.86	0.43	1.87	N/A	N/A	1.12	4.91	1.12	4.91	-	-	-	-
13	49.70	217.69	1.76	7.70	2.48	10.86	0.43	1.87	N/A	N/A	1.12	4.91	1.12	4.91	-	-	-	-
14	49.70	217.69	17.24	75.51	2.48	10.86	0.43	1.87	N/A	N/A	1.12	4.91	1.12	4.91	-	-	-	-
17	78.52	343.90	31.48	137.89	0.70	3.08	2.08	9.09	N/A	N/A	1.03	4.53	1.03	4.53	-	-	-	-
18	78.52	343.90	31.48	137.89	0.70	3.08	2.08	9.09	N/A	N/A	1.03	4.53	1.03	4.53	-	-	-	-
30	13.95	3.49	3.01	0.75	1.13	0.28	0.92	0.23	N/A	N/A	0.99	0.25	0.99	0.25	-	-	-	-
32	4.60	20.16	0.87	3.83	0.83	3.63	0.23	1.01	N/A	N/A	0.29	1.29	0.29	1.29	-	-	-	-
33	4.60	20.16	0.87	3.83	0.83	3.63	0.23	1.01	N/A	N/A	0.29	1.29	0.29	1.29	-	-	-	-
34	4.60	20.16	0.87	3.83	0.83	3.63	0.23	1.01	N/A	N/A	0.29	1.29	0.29	1.29	-	-	-	-
35	76.16	333.60	2.37	10.40	0.24	1.03	1.45	6.34	N/A	N/A	0.75	3.30	0.75	3.30	-	-	-	-
36	76.16	333.60	2.37	10.40	0.24	1.03	1.45	6.34	N/A	N/A	0.75	3.30	0.75	3.30	-	-	-	-
37	76.16	333.60	2.37	10.40	0.24	1.03	1.45	6.34	N/A	N/A	0.75	3.30	0.75	3.30	-	-	-	-
42/43	5.18	22.69	10.34	45.30	1.52	6.66	0.0034	0.015	N/A	N/A	-	-	-	-	1.43E-04	6.26E-04	-	-
44	5.41	23.68	10.79	47.28	11.59	50.77	0.0034	0.015	N/A	N/A	-	-	-	-	1.43E-04	6.26E-04	-	-
46	4.50	19.71	1.30	5.69	0.10	0.44	6.40	28.03	N/A	N/A	-	-	-	-	0.41	1.82	-	-
48	1.89	8.26	1.79	7.85	0.09	0.39	0.15	0.67	N/A	N/A	0.057	0.25	0.057	0.25	-	-	-	-
49	7.97	34.91	5.78	25.32	0.17	0.74	0.75	3.29	N/A	N/A	0.39	1.69	0.39	1.69	-	-	-	-
50	5.15	22.54	1.84	8.05	2.39	10.48	0.36	1.57	N/A	N/A	0.24	1.06	0.24	1.06	-	-	-	-
51a	0.58	2.54	0.49	2.13	0.03	0.14	0.083	0.36	N/A	N/A	0.080	0.35	0.080	0.35	-	-	-	-
51b[2]	-	-	-	-	-	-	-	-	N/A	N/A	-	-	-	-	-	-	-	-
TK 28	-	-	-	-	5.94	26.00	-	-	N/A	N/A	-	-	-	-	-	-	-	-
TK 29	-	-	-	-	5.94	26.00	-	-	N/A	N/A	-	-	-	-	-	-	-	-
F-001	-	-	-	-	3.60	15.78	-	-	N/A	N/A	-	-	-	-	-	-	-	-
F-002	-	-	-	-	0.091	0.40	-	-	N/A	N/A	-	-	-	-	-	-	-	-
F-003	-	-	-	-	0.053	0.23	-	-	N/A	N/A	-	-	-	-	-	-	-	-
F-004	-	-	-	-	0.39	1.72	-	-	N/A	N/A	-	-	-	-	-	-	-	-
F-005	-	-	-	-	3.61	15.80	-	-	N/A	N/A	-	-	-	-	-	-	-	-
F-006	-	-	-	-	9.16	40.12	-	-	N/A	N/A	-	-	-	-	-	-	-	-
F-008	-	-	-	-	4.04	17.70	-	-	N/A	N/A	-	-	-	-	-	-	-	-
F-009	-	-	-	-	0.015	0.067	-	-	N/A	N/A	-	-	-	-	-	-	-	-
CT-B	-	-	-	-	-	-	-	-	N/A	N/A	0.80	3.50	0.0091	0.040	-	-	-	-
CT-C	-	-	-	-	-	-	-	-	N/A	N/A	0.25	1.10	0.0029	0.0126	-	-	-	-

Unit No.	NOx		CO		VOC		SOx		TSP[3]		PM10[1]		PM2.5[1]		H_2S		Lead	
	lb/hr	ton/yr	lb/hr	ton/yr	lb/hr	ton/yr	lb/hr	ton/yr	lb/hr	ton/yr	lb/hr	ton/yr	lb/hr	ton/yr	lb/hr	ton/yr	lb/hr	ton/yr
BT 1-4	-	-	-	-	0.57	2.51	-	-	N/A	N/A	-	-	-	-	-	-	-	-
TRUCK	-	-	-	-	42.53	30.62	-	-	N/A	N/A	-	-	-	-	-	-	-	-
M1	-	-	-	-	*	10.00	-	-	N/A	N/A	-	-	-	-	-	-	-	-
42/43 SSM	22.43	2.70	44.78	5.39	6.51	0.78	0.00	0.00	N/A	N/A	-	-	-	-	-	-	-	-
44 SSM	54.88	8.24	109.56	1.35	10.87	1.35	10.93	1.35	N/A	N/A	-	-	-	-	-	-	-	-
SSM BD	-	-	-	-	164.98	0.71	-	-	N/A	N/A	-	-	-	-	-	-	-	-
Totals	**683.25**	**2607.34**	**302.16**	**641.78**	**290.59**	**327.88**	**30.94**	**85.21**	**N/A**	**N/A**	**12.56**	**50.93**	**11.52**	**46.38**	**0.42**	**1.82**	**-**	**-**

[1] **Condensable Particulate Matter:** Include condensable particulate matter emissions for PM10 and PM2.5 if the source is a combustion source. Do not include condensable particulate matter for TSP unless TSP is set equal to PM10 and PM2.5.

[2] Glycol dehydrator (unit 51b) emissions are controlled by a process flare and are represeted under unit 44.

[3] The TSP NMAAQS was repealed on 11/30/2018.

Malfunction Emissions: Per "Implementation Guidance for Permitting SSM Emissions and Excess Emissions" document issued 10 January 2011, instead of permitting SSM and upset/malfunction emissions separately, the applicant may request that emissions from both SSM and upset/malfunction be consolidated in the permit with a total limit of 10 tons per year per facility for the combined category to reduce concerns about the appropriateness of activities listed as SSM.

Table 2-F: Additional Emissions during Startup, Shutdown, and Routine Maintenance (SSM)

☐ This table is intentionally left blank since all emissions at this facility due to routine or predictable startup, shutdown, or scehduled maintenance are no higher than those listed in Table 2-E and a malfunction emission limit is not already permitted or requested. If you are required to report GHG emissions as described in Section 6a, include any GHG emissions during Startup, Shutdown, and/or Scheduled Maintenance (SSM) in Table 2-P. Provide an explanations of SSM emissions in Section 6 and 6a.

All applications for facilities that have emissions during routine our predictable startup, shutdown or scheduled maintenance (SSM)[1], including NOI applications, must include in this table the Maximum Emissions during routine or predictable startup, shutdown and scheduled maintenance (20.2.7 NMAC, 20.2.72.203.A.3 NMAC, 20.2.73.200.D.2 NMAC). In Section 6 and 6a, provide emissions calculations for all SSM emissions reported in this table. Refer to "Guidance for Submittal of Startup, Shutdown, Maintenance Emissions in Permit Applications (https://www.env.nm.gov/aqb/permit/aqb_pol.html) for more detailed instructions. Numbers shall be expressed to at least 2 decimal points (e.g. 0.41, 1.41, or 1.41E-4).

Unit No.	NOx		CO		VOC		SOx		TSP[2]		PM10[2]		PM2.5[2]		H_2S		Lead	
	lb/hr	ton/yr	lb/hr	ton/yr	lb/hr	ton/yr	lb/hr	ton/yr	lb/hr	ton/yr	lb/hr	ton/yr	lb/hr	ton/yr	lb/hr	ton/yr	lb/hr	ton/yr
42/43 SSM	22.43	2.70	44.78	5.39	6.51	0.78	1.56E-04	6.85E-04	-	-	-	-	-	-	1.43E-07	6.26E-07	-	-
44 SSM	54.88	8.24	109.56	1.35	10.87	1.35	10.93	1.35	-	-	-	-	-	-	0.10	0.013	-	-
SSM BD	-	-	-	-	164.98	0.71	-	-	-	-	-	-	-	-	-	-	-	-
M1	-	-	-	-	-	10.00	-	-	-	-	-	-	-	-	-	-	-	-
Totals	**77.31**	**10.94**	**154.34**	**6.74**	**182.36**	**12.84**	**10.93**	**1.36**	-	-	-	-	-	-	**0.10**	**0.013**	-	-

[1] **For instance,** if the short term steady-state Table 2-E emissions are 5 lb/hr and the SSM rate is 12 lb/hr, enter 7 lb/hr in this table. If the annual steady-state Table 2-E emissions are 21.9 TPY, and the number of scheduled SSM events result in annual emissions of 31.9 TPY, enter 10.0 TPY in the table below.

[2] **Condensable Particulate Matter:** Include condensable particulate matter emissions for PM10 and PM2.5 if the source is a combustion source. Do not include condensable particulate matter for TSP unless TSP is set equal to PM10 and PM2.5.

Table 2-G: Stack Exit and Fugitive Emission Rates for Special Stacks

☑ I have elected to leave this table blank because this facility does not have any stacks/vents that split emissions from a single source or combine emissions from more than one source listed in table 2-A. Additionally, the emission rates of all stacks match the Requested allowable emission rates stated in Table 2-E.

Use this table to list stack emissions (requested allowable) from split and combined stacks. List Toxic Air Pollutants (TAPs) and Hazardous Air Pollutants (HAPs) in Table 2-I. List all fugitives that are associated with the normal, routine, and non-emergency operation of the facility. Unit and stack numbering must correspond throughout the application package. Refer to Table 2-E for instructions on use of the "-" symbol and on significant figures.

Stack No.	Serving Unit Number(s) from Table 2-A	NOx		CO		VOC		SOx		TSP		PM10		PM2.5		☐ H_2S or ☐ Lead	
		lb/hr	ton/yr	lb/hr	ton/yr	lb/hr	ton/yr	lb/hr	ton/yr	lb/hr	ton/yr	lb/hr	ton/yr	lb/hr	ton/yr	lb/hr	ton/yr
Totals:																	

Table 2-H: Stack Exit Conditions

Unit and stack numbering must correspond throughout the application package. Include the stack exit conditions for each unit that emits from a stack, including blowdown venting parameters and tank emissions. If the facility has multiple operating scenarios, complete a separate Table 2-H for each scenario and, for each, type scenario name here:

Stack Number	Serving Unit Number(s) from Table 2-A	Orientation (H-Horizontal V=Vertical)	Rain Caps	Height Above	Temp.	Flow Rate		Moisture by	Velocity	Inside Diameter (ft)
			(Yes or No)	Ground (ft)	(F)	(acfs)	(dscfs)	Volume (%)	(ft/sec)	
A-8	8	V	No	22	825	421.3			98.8	2.33
A-11	11	V	No	22	825	421.3			98.8	2.33
B-1	12	V	No	35	643	601.8		6%	129	2.44
B-2	13	V	No	35	643	601.8		6%	129	2.44
B-3	14	V	No	35	643	601.8		6%	129	2.44
C1	17	V	No	41	766	6529.0			162	7.16
C2	18	V	No	40.25	766	6432.9			161	7.14
30	30	V	No	16	500	4757.1		10%	179	0.75
CRYO1-1	32	V	No	22	868	240.9			110	1.67
CRYO2-1	33	V	No	22	868	240.9			110	1.67
CRYO3-1	34	V	No	22	868	240.9			110	1.67
CRYO1-2	35	V	No	50	907	4206.6			95	7.5
CRYO2-2	36	V	No	50	907	4206.6			95	7.5
CRYO3-2	37	V	No	50	907	4206.6			95	7.5
FLARE 1	42	V	No	25	1832	69.3			65.6	1.16
FLARE 2	43	V	No	8	1832				65.6	**
FLARE 3	44	V	No	130	1832	11.9			65.6	0.5
TO	46	V	No							
HEAT	48	V	No	46	580	69.6			18	2.25
TW	49	V	No	36	842	1749.5			89.10	5.00
BIST18b	50	V	No	22	858	404.6			128.8	2.00
TEG*	51	V	No	29	200	28.9			9.20	2.00

* Unit 51 has two identical burners (reboilers) each equipped with an identical exhaust stack with a diameter of 2 feet and height of 29 feet above ground.

Table 2-I: Stack Exit and Fugitive Emission Rates for HAPs and TAPs

In the table below, report the Potential to Emit for each HAP from each regulated emission unit listed in Table 2-A, only if the entire facility emits the HAP at a rate greater than or equal to one (1) ton per year For each such emission unit, HAPs shall be reported to the nearest 0.1 tpy. Each facility-wide Individual HAP total and the facility-wide Total HAPs shall be the sum of all HAP sources calculated to the nearest 0.1 ton per year. Per 20.2.72.403.A.1 NMAC, facilities not exempt [see 20.2.72.402.C NMAC] from TAP permitting shall report each TAP that has an uncontrolled emission rate in excess of its pounds per hour screening level specified in 20.2.72.502 NMAC. TAPs shall be reported using one more significant figure than the number of significant figures shown in the pound per hour threshold corresponding to the substance. Use the HAP nomenclature as it appears in Section 112 (b) of the 1990 CAAA and the TAP nomenclature as it listed in 20.2.72.502 NMAC. Include tank-flashing emissions estimates of HAPs in this table. For each HAP or TAP listed, fill all cells in this table with the emission numbers or a "-" symbol. A "-" symbol indicates that emissions of this pollutant are not expected or the pollutant is emitted in a quantity less than the threshold amounts described above.

Stack No.	Unit No.(s)	Total HAPs		Formaldehyde √HAP or □ TAP		Methanol √HAP or □ TAP		Acetaldehyde √HAP or □ TAP		Acrolein √HAP or □ TAP		Benzene √HAP or □ TAP		Toluene √HAP or □ TAP		Ethylbenzene √HAP or □ TAP		Xylenes √HAP or □ TAP		Hexane √HAP or □ TAP		Styrene √HAP or □ TAP		Trimethylpentane √HAP or □ TAP	
		lb/hr	ton/yr	lb/hr	ton/yr	lb/hr	ton/yr	lb/hr	ton/yr	lb/hr	ton/yr	lb/hr	ton/yr	lb/hr	ton/yr	lb/hr	ton/yr	lb/hr	ton/yr	lb/hr	ton/yr	lb/hr	ton/yr	lb/hr	ton/yr
A-8	8	1.36	5.97	0.91	4.01	0.18	0.81	0.08	0.37	0.080	0.35	0.048	0.21	0.017	0.074	-	-	0.0059	0.026	-	-	3.65E-04	0.0016	-	-
A-11	11	1.36	5.97	0.91	4.01	0.18	0.81	0.08	0.37	0.080	0.35	0.048	0.21	0.017	0.074	-	-	0.0059	0.026	-	-	3.65E-04	0.0016	-	-
B-1	12	2.69	11.80	1.58	6.92	0.10	0.44	0.17	0.73	0.091	0.40	0.048	0.21	0.063	0.28	-	-	0.089	0.19	0.11	0.48	0.17	0.77	0.19	0.85
B-2	13	2.69	11.80	1.58	6.92	0.10	0.44	0.17	0.73	0.091	0.40	0.048	0.21	0.063	0.28	-	-	0.089	0.19	0.11	0.48	0.17	0.77	0.19	0.85
B-3	14	2.69	11.80	1.58	6.92	0.10	0.44	0.17	0.73	0.091	0.40	0.048	0.21	0.063	0.28	-	-	0.089	0.19	0.11	0.48	0.17	0.77	0.19	0.85
C1	17	1.48	6.50	0.60	2.65	-	-	0.62	2.71	0.0093	0.041	0.019	0.084	0.015	0.064	-	-	0.044	0.19	0.054	0.24	-	-	0.057	0.25
C2	18	1.48	6.50	0.60	2.65	-	-	0.62	2.71	0.0093	0.041	0.019	0.084	0.015	0.064	-	-	0.04	0.19	0.054	0.24	-	-	0.057	0.25
AIRCOMP	30	0.02	0.0055	-	-	-	-	-	-	3.21E-04	8.03E-05	0.0032	8.10E-04	0.0014	3.55E-04	-	-	0.0010	2.48E-04	-	-	-	-	-	-
CRYO1-1	32	0.68	2.98	0.46	2.00	0.092	0.40	0.042	0.19	0.040	0.17	0.024	0.11	0.0085	0.037	-	-	0.0030	0.013	-	-	1.83E-04	8.00E-04	-	-
CRYO2-1	33	0.68	2.98	0.46	2.00	0.092	0.40	0.042	0.19	0.040	0.17	0.024	0.11	0.0085	0.037	-	-	0.0030	0.013	-	-	1.83E-04	8.00E-04	-	-
CRYO3-1	34	0.68	2.98	0.46	2.00	0.092	0.40	0.042	0.19	0.040	0.17	0.024	0.11	0.0085	0.037	-	-	0.0030	0.013	-	-	1.83E-04	8.00E-04	-	-
CRYO1-2	35	1.08	4.74	0.44	1.93	-	-	0.45	1.98	0.0068	0.030	0.014	0.061	0.011	0.047	-	-	0.032	0.14	0.039	0.17	-	-	0.042	0.18
CRYO2-2	36	1.08	4.74	0.44	1.93	-	-	0.45	1.98	0.0068	0.030	0.014	0.061	0.011	0.047	-	-	0.032	0.14	0.039	0.17	-	-	0.042	0.18
CRYO3-2	37	1.08	4.74	0.44	1.93	-	-	0.45	1.98	0.0068	0.030	0.014	0.061	0.011	0.047	-	-	0.032	0.14	0.039	0.17	-	-	0.042	0.18
FLARE 1	42	0.10	0.019	-	-	-	-	-	-	-	-	-	-	-	-	-	-	-	-	0.10	0.019	-	-	-	-
FLARE 2	43	-	-	-	-	-	-	-	-	-	-	-	-	-	-	-	-	-	-	-	-	-	-	-	-
FLARE 3	44	0.53	0.096	-	-	-	-	-	-	-	-	-	-	-	-	-	-	-	-	0.53	0.096	-	-	-	-
HEAT	48	0.11	0.48	0.0065	0.028	0.0074	0.032	0.0057	0.025	-	-	0.0058	0.025	0.0078	0.034	-	-	0.010	0.044	0.011	0.047	0.016	0.070	0.022	0.096
TW	49	0.55	2.42	0.23	0.99	-	-	0.23	1.01	0.0034	0.015	0.0072	0.031	0.0055	0.024	-	-	0.017	0.073	0.020	0.088	-	-	0.021	0.094
BIST18b	50	1.75	7.67	1.28	5.61	0.061	0.27	0.20	0.89	0.12	0.55	0.011	0.047	0.0099	0.043	-	-	0.0045	0.020	0.027	0.12	5.71E-04	0.0025	0.0061	0.027
51a	51a	0.075	0.33	0.0044	0.019	0.0050	0.022	0.0039	0.017	-	-	0.00390411	0.017	0.005	0.023	-	-	0.0069	0.030	0.0074	0.032	0.011	0.048	0.015	0.065
51b	51b	-	-	-	-	-	-	-	-	-	-	-	-	-	-	-	-	-	-	-	-	-	-	-	-
TK 28	TK 28	0.18	0.78	-	-	-	-	-	-	-	-	0.013	0.056	0.011	0.047	1.72E-04	7.55E-04	0.046	0.20	0.11	0.47	-	-	5.81E-04	0.0025
TK 29	TK29	0.18	0.78	-	-	-	-	-	-	-	-	0.013	0.056	0.011	0.047	1.72E-04	7.55E-04	0.046	0.20	0.11	0.47	-	-	5.81E-04	0.0025
TRUCK	TRUCK	0.78	3.43	-	-	-	-	-	-	-	-	0.082	0.36	0.25	1.08	0.012	0.054	0.023	0.10	0.41	1.81	-	-	0.0073	0.032
F-001	F-001	0.41	1.80	-	-	-	-	-	-	-	-	0.00539885	0.024	0.0092	0.040	4.69E-04	0.0021	0.0023	0.010	0.39	1.72	-	-	-	-
F-002	F-002	-	-	-	-	-	-	-	-	-	-	-	-	-	-	-	-	-	-	-	-	-	-	-	-
F-003	F-003	-	-	-	-	-	-	-	-	-	-	-	-	-	-	-	-	-	-	-	-	-	-	-	-
F-004	F-004	0.0038	0.017	-	-	-	-	-	-	-	-	3.49E-04	0.0015	5.91E-04	0.0026	3.03E-05	1.33E-04	1.52E-04	6.64E-04	0.0027	0.012	-	-	-	-
F-005	F-005	0.011	0.047	-	-	-	-	-	-	-	-	2.68E-04	0.0012	4.54E-04	0.0020	2.33E-05	1.02E-04	1.16E-04	5.09E-04	0.010	0.043	-	-	-	-
F-006	F-006	1.35	5.97		-	-	-	-	-	-	-	0.0023	0.010	0.0040	0.017	2.03E-04	8.89E-04	0.0010	0.0044	1.35	5.93	-	-	-	-
F-008	F-008	-	-	-	-	-	-	-	-	-	-	-	-	-	-	-	-	-	-	-	-	-	-	-	-
F-009	F-009	4.56E-04	0.0020	-	-	-	-	-	-	-	-	2.7084E-05	1.19E-04	7.52E-05	3.30E-04	1.71E-05	7.47E-05	3.61E-05	1.58E-04	3.01E-04	0.0013	-	-	-	-
BT 1-4	BT 1-4	0.50	2.18	-	-	-	-	-	-	-	-	0.25	1.09	0.20	0.86	0.0046	0.020	0.048	0.21	-	-	-	-	-	-
Totals		**25.63**	**109.55**	**12.0**	**52.52**	**1.02**	**4.46**	**3.83**	**16.77**	**0.72**	**3.15**	**0.79**	**3.44**	**0.82**	**3.57**	**0.018**	**0.078**	**0.68**	**2.38**	**3.64**	**13.31**	**0.55**	**2.42**	**0.90**	**3.92**

Table 2-J: Fuel

Specify fuel characteristics and usage. Unit and stack numbering must correspond throughout the application package.

Unit No.	Fuel Type (low sulfur Diesel, ultra low sulfur diesel, Natural Gas, Coal, ...)	Fuel Source: purchased commercial, pipeline quality natural gas, residue gas, raw/field natural gas, process gas (e.g. SRU tail gas) or other	Specify Units				
			Lower Heating Value (btu/scf) *unless noted otherwise	Hourly Usage (MScf/hr) *unless noted otherwise	Annual Usage (MMScf/yr) *unless noted otherwise	% Sulfur (gr/100 scf)	% Ash
8	Pipeline Quality Natural Gas	Pipeline Quality Natural Gas	900	30.57	267.84	5	N/A
11	Pipeline Quality Natural Gas	Pipeline Quality Natural Gas	900	30.57	267.84	5	N/A
12	Pipeline Quality Natural Gas	Pipeline Quality Natural Gas	900	29.87	261.70	5	N/A
13	Pipeline Quality Natural Gas	Pipeline Quality Natural Gas	900	29.87	261.70	5	N/A
14	Pipeline Quality Natural Gas	Pipeline Quality Natural Gas	900	29.87	261.70	5	N/A
17	Pipeline Quality Natural Gas	Pipeline Quality Natural Gas	1245	145.31	1272.93	5	N/A
18	Pipeline Quality Natural Gas	Pipeline Quality Natural Gas	1245	145.31	1272.93	5	N/A
30	Diesel Fuel	Purchased	19300 Btu/lb	25.35 gal/hr	12676 gal/yr	-	N/A
32	Pipeline Quality Natural Gas	Pipeline Quality Natural Gas	900	16.08	140.90	5	N/A
33	Pipeline Quality Natural Gas	Pipeline Quality Natural Gas	900	16.08	140.90	5	N/A
34	Pipeline Quality Natural Gas	Pipeline Quality Natural Gas	900	16.08	140.90	5	N/A
35	Pipeline Quality Natural Gas	Pipeline Quality Natural Gas	900	101.39	888.14	5	N/A
36	Pipeline Quality Natural Gas	Pipeline Quality Natural Gas	900	101.39	888.14	5	N/A
37	Pipeline Quality Natural Gas	Pipeline Quality Natural Gas	900	101.39	888.14	5	N/A
42	Pipeline Quality Natural Gas	Pipeline Quality Natural Gas	900	0.20	1.75	5	N/A
43	Pipeline Quality Natural Gas	Pipeline Quality Natural Gas	900	0.20	1.75	5	N/A
44	Pipeline Quality Natural Gas	Pipeline Quality Natural Gas	900	0.20	1.75	5	N/A
46	Pipeline Quality Natural Gas	Pipeline Quality Natural Gas	900	9.67	84.68	5	N/A
48	Pipeline Quality Natural Gas	Pipeline Quality Natural Gas	900	10.67	93.44	5	N/A

Unit No.	Fuel Type (low sulfur Diesel, ultra low sulfur diesel, Natural Gas, Coal, ...)	Fuel Source: purchased commercial, pipeline quality natural gas, residue gas, raw/field natural gas, process gas (e.g. SRU tail gas) or other	Specify Units				
			Lower Heating Value (btu/scf) *unless noted otherwise	Hourly Usage (MScf/hr) *unless noted otherwise	Annual Usage (MMScf/yr) *unless noted otherwise	% Sulfur (gr/100 scf)	% Ash
49	Pipeline Quality Natural Gas	Pipeline Quality Natural Gas	900	52.58	460.60	5	N/A
50	Pipeline Quality Natural Gas	Pipeline Quality Natural Gas	900	25.05	219.46	5	N/A
51	Pipeline Quality Natural Gas	Pipeline Quality Natural Gas	900	5.80	50.81	5	N/A

Table 2-K: Liquid Data for Tanks Listed in Table 2-L

For each tank, list the liquid(s) to be stored in each tank. If it is expected that a tank may store a variety of hydrocarbon liquids, enter "mixed hydrocarbons" in the Composition column for that tank and enter the corresponding data of the most volatile liquid to be stored in the tank. If tank is to be used for storage of different materials, list all the materials in the "All Calculations" attachment, run the newest version of TANKS on each, and use the material with the highest emission rate to determine maximum uncontrolled and requested allowable emissions rate. The permit will specify the most volatile category of liquids that may be stored in each tank. Include appropriate tank-flashing modeling input data. Use additional sheets if necessary. Unit and stack numbering must correspond throughout the application package.

Tank No.	SCC Code	Material Name	Composition	Liquid Density (lb/gal)	Vapor Molecular Weight (lb/lb*mol)	Average Storage Conditions		Max Storage Conditions	
						Temperature (°F)	True Vapor Pressure (psia)	Temperature (°F)	True Vapor Pressure (psia)
TK 28	231000000	Condensate	Mixed C2 + Hydrocarbons	5.65	93.93	54.85	8.82	62.45	9.95
TK 29	231000000	Condensate	Mixed C2 + Hydrocarbons	5.64	93.93	54.85	8.82	62.45	9.95
BT 1	231000000	Produced Water	Produced Water	8.35	57.7	40	0.32	100	1.96
BT 2	231000000	Produced Water	Produced Water	8.35	57.73	40	0.32	100	1.96
BT 3	231000000	Produced Water	Produced Water	8.35	57.73	40	0.32	100	1.96
BT 4	231000000	Produced Water	Produced Water	8.35	57.73	40	0.32	100	1.96

Table 2-L: Tank Data

Include appropriate tank-flashing modeling input data. Use an addendum to this table for unlisted data categories. Unit and stack numbering must correspond throughout the application package. Use additional sheets if necessary. See reference Table 2-L2. Note: 1.00 bbl = 10.159 M3 = 42.0 gal

Tank No.	Date Installed	Materials Stored	Seal Type (refer to Table 2-LR below)	Roof Type (refer to Table 2-LR below)	Capacity		Diameter (M)	Vapor Space (M)	Color (from Table VI-C)		Paint Condition (from Table VI-C)	Annual Throughput (gal/yr)	Turn-overs (per year)
					(bbl)	(M^3)			Roof	Shell			
TK 28	1994	Condensate	N/A	VFR	4,000	636	35	130	WH	WH	Good	5,040,000	30.00
TK 29	1994	Condensate	N/A	VFR	4,000	636	35	130	WH	WH	Good	5,040,000	30.00
BT 1	2010	Produced Water	N/A	VFR	400	64	3.05	3.05	WH	WH	Good	4,721,157	281.02
BT 2	2010	Produced Water	N/A	VFR	400	64	3.05	3.05	WH	WH	Good	4,721,157	281.02
BT 3	2010	Produced Water	N/A	VFR	400	64	3.05	3.05	WH	WH	Good	4,721,157	281.02
BT 4	2010	Produced Water	N/A	VFR	400	64	3.05	3.05	WH	WH	Good	4,721,157	281.02

Table 2-L2: Liquid Storage Tank Data Codes Reference Table

Roof Type	Seal Type, Welded Tank Seal Type		Seal Type, Riveted Tank Seal Type		Roof, Shell Color	Paint Condition
FX: Fixed Roof	Mechanical Shoe Seal	Liquid-mounted resilient seal	Vapor-mounted resilient seal	Seal Type	WH: White	Good
IF: Internal Floating Roof	A: Primary only	A: Primary only	A: Primary only	A: Mechanical shoe, primary only	AS: Aluminum (specular)	Poor
EF: External Floating Roof	B: Shoe-mounted secondary	B: Weather shield	B: Weather shield	B: Shoe-mounted secondary	AD: Aluminum (diffuse)	
P: Pressure	C: Rim-mounted secondary	C: Rim-mounted secondary	C: Rim-mounted secondary	C: Rim-mounted secondary	LG: Light Gray	
					MG: Medium Gray	
					BL: Black	
					OT: Other (specify)	

Note: 1.00 bbl = 0.159 M^3 = 42.0 gal

Table 2-M: Materials Processed and Produced (Use additional sheets as necessary.)

Material Processed				Material Produced			
Description	Chemical Composition	Phase (Gas, Liquid, or Solid)	Quantity (specify units)	Description	Chemical Composition	Phase	Quantity (specify units)
Natural Gas	Field Natural Gas (See Section 7 for Extended Gas Analysis)	Wet Gas	700 MMscf/d	Processed Natural Gas	Residue Gas (Primarily Methane)	Gas	700 MMscf/d
				Condensate	Mixed Hydrocarbon Liquids (VOCs)	Liquid	657.53 bbl/d
				Produced Water	Produced Water	Liquid	1231.87 bbl/d

Table 2-N: CEM Equipment

Enter Continuous Emissions Measurement (CEM) Data in this table. If CEM data will be used as part of a federally enforceable permit condition, or used to satisfy the requirements of a state or federal regulation, include a copy of the CEM's manufacturer specification sheet in the Information Used to Determine Emissions attachment. Unit and stack numbering must correspond throughout the application package. Use additional sheets if necessary.

Stack No.	Pollutant(s)	Manufacturer	Model No.	Serial No.	Sample Frequency	Averaging Time	Range	Sensitivity	Accuracy

Table 2-O: Parametric Emissions Measurement Equipment

Unit and stack numbering must correspond throughout the application package. Use additional sheets if necessary.

Unit No.	Parameter/Pollutant Measured	Location of Measurement	Unit of Measure	Acceptable Range	Frequency of Maintenance	Nature of Maintenance	Method of Recording	Averaging Time

Table 2-P: Greenhouse Gas Emissions

Applications submitted under 20.2.70, 20.2.72, & 20.2.74 NMAC are required to complete this Table. Power plants, Title V major sources, and PSD major sources must report and calculate all GHG emissions for each unit. Applicants must report potential emission rates in short tons per year (see Section 6.a for assistance). Include GHG emissions during Startup, Shutdown, and Scheduled Maintenance in this table. For minor source facilities that are not power plants, are not Title V, or are not PSD, there are three options for reporting GHGs 1) report GHGs for each individual piece of equipment; 2) report all GHGs from a group of unit types, for example report all combustion source GHGs as a single unit and all venting GHG as a second separate unit; OR 3) check the following box ☐ By checking this box, the applicant acknowledges the total CO2e emissions are less than 75,000 tons per year.

Unit No.	GWPs [1]	CO_2 ton/yr	N_2O ton/yr	CH_4 ton/yr	SF_6 ton/yr	PFC/HFC ton/yr[2]					Total GHG Mass Basis ton/yr[4]	Total CO_2e ton/yr[5]
8	mass GHG	14,089.90	0.027	0.27	-	-					14,090.19	
	CO_2e	14,089.90	7.91	6.64	-	-						14,104.45
11	mass GHG	14,089.90	0.027	0.27	-	-					14,090.19	
	CO_2e	14,089.90	7.91	6.64	-	-						14,104.45
12	mass GHG	13,782.48	0.03	0.26	-	-					13,782.77	
	CO_2e	13,782.48	7.74	6.49	-	-						13,796.71
13	mass GHG	13,782.48	0.026	0.26	-	-					13,782.77	
	CO_2e	13,782.48	7.74	6.49	-	-						13,796.71
14	mass GHG	13,782.48	0.03	0.26	-	-					13,782.77	
	CO_2e	13,782.48	7.74	6.49	-	-						13,796.71
17	mass GHG	104,623.88	0.20	1.97	-	-					104,626.05	
	CO_2e	104,623.88	58.76	49.30	-	-						104,731.94
18	mass GHG	103,445.46	0.19	1.95	-	-					103,447.60	
	CO_2e	103,445.46	58.10	48.74	-	-						103,552.29
30	mass GHG	101.48	1.91E-04	0.002	-	-					101.48	
	CO_2e	101.48	0.06	0.05	-	-						101.58
32	mass GHG	7,429.22	0.014	0.14	-	-					7,429.37	
	CO2e	7,429.22	4.17	3.50	-	-						7,436.89
33	mass GHG	7,429.22	0.014	0.14	-	-					7,429.37	
	CO_2e	7,429.22	4.17	3.50	-	-						7,436.89
34	mass GHG	7,429.22	0.014	0.14	-	-					7,429.37	
	CO2e	7,429.22	4.17	3.50	-	-						7,436.89
35	mass GHG	59,433.74	0.11	1.12	-	-					59,434.98	
	CO_2e	59,433.74	33.38	28.00	-	-						59,495.13
36	mass GHG	59,433.74	0.11	1.12	-	-					59,434.98	
	CO2e	59,433.74	33.38	28.00	-	-						59,495.13
37	mass GHG	59,433.74	0.11	1.12	-	-					59,434.98	
	CO_2e	59,433.74	33.38	28.00	-	-						59,495.13
42/43	mass GHG	20,744.88	0.048	140.11	-	-					20,885.04	
	CO2e	20,744.88	14.22	3,502.83	-	-						24,261.93
44	mass GHG	24,469.92	0.04	31.34	-	-					24,501.30	
	CO_2e	24,469.92	10.43	783.59	-	-						25,263.94
46	mass GHG	5,051.88	0.010	0.10	-	-					5,051.98	
	CO_2e	5,051.88	2.84	2.38	-	-						5,057.09
48	mass GHG	3,934.92	0.0074	0.074	-	-					3,935.01	
	CO2e	3,934.92	2.21	1.85	-	-						3,938.99
49	mass GHG	24,234.62	0.046	0.46	-	-					24,235.12	
	CO2e	24,234.62	13.61	11.42	-	-						24,259.65
50	mass GHG	11,528.10	0.022	0.22	-	-					11,528.34	
	CO_2e	11,528.10	6.47	5.43	-	-						11,540.00
51a	mass GHG	2,674.52	0.0050	0.050	-	-					2,674.57	
	CO2e	2,674.52	1.50	1.26	-	-						2,677.28
51b	mass GHG	70.09	8.61E-05	0.10	-	-					70.20	
	CO2e	70.09	0.026	2.62	-	-						72.73
42/43 SSM	mass GHG	1.68	-	0.85	-	-					2.53	
	CO_2e	1.68	-	21.26	-	-						22.94
SSM BD	mass GHG	0.01	-	0.23	-	-					0.24	
	CO_2e	0.01	-	5.66	-	-						5.66
Total	mass GHG	565,875.59	1.06	182.35	-	-					571,181.17	
	CO_2e	565,875.59	317.07	4,558.65	-	-						575,881.14

[1] **GWP** (Global Warming Potential): Applicants must use the most current GWPs codified in Table A-1 of 40 CFR part 98. GWPs are subject to change, therefore, applicants need to check 40 CFR 98 to confirm GWP values.

[2] For **HFCs** or **PFCs** describe the specific HFC or PFC compound and use a separate column for each individual compound.

[3] For each new compound, enter the appropriate GWP for each HFC or PFC compound from Table A-1 in 40 CFR 98.

[4] Green house gas emissions on a **mass basis** is the ton per year green house gas emission before adjustment with its GWP.

[5] **CO_2e** means Carbon Dioxide Equivalent and is calculated by multiplying the TPY mass emissions of the green house gas by its GWP.

Section 3

Application Summary

The **Application Summary** shall include a brief description of the facility and its process, the type of permit application, the applicable regulation (i.e. 20.2.72.200.A.X, or 20.2.73 NMAC) under which the application is being submitted, and any air quality permit numbers associated with this site. If this facility is to be collocated with another facility, provide details of the other facility including permit number(s). In case of a revision or modification to a facility, provide the lowest level regulatory citation (i.e. 20.2.72.219.B.1.d NMAC) under which the revision or modification is being requested. Also describe the proposed changes from the original permit, how the proposed modification will affect the facility's operations and emissions, de-bottlenecking impacts, and changes to the facility's major/minor status (both PSD & Title V).

Routine or predictable emissions during Startup, Shutdown, and Maintenance (SSM): Provide an overview of how SSM emissions are accounted for in this application. Refer to "Guidance for Submittal of Startup, Shutdown, Maintenance Emissions in Permit Applications (http://www.env.nm.gov/aqb/permit/app_form.html) for more detailed instructions on SSM emissions.

Enterprise Field Services LLC owns & Enterprise Products Operating LLC operates (Enterprise) the Chaco Natural Gas Processing Plant (Chaco Gas Plant), a natural gas processing plant.

The Chaco Gas Plant receives field gas via pipeline, compresses the gas, and cryogenically separates methane (residue gas) from gas liquids. The residue and some liquids are transported from the facility by pipeline, while the condensate is transported via tank truck.

The facility is currently authorized to operate under Title V Operating Permit No. P116-R2. Enterprise is submitting this Title V Renewal in accordance with 20.2.70.300.B(2), which requires a Title V Permit renewal application be submitted at least twelve (12) months prior to expiration of the current Title V Operating Permit (current permit expires March 13, 2020). No modifications to the facility are associated with this application.

Section 4

Process Flow Sheet

A **process flow sheet** and/or block diagram indicating the individual equipment, all emission points and types of control applied to those points. The unit numbering system should be consistent throughout this application.

A Process Flow Diagram is included on the following page.

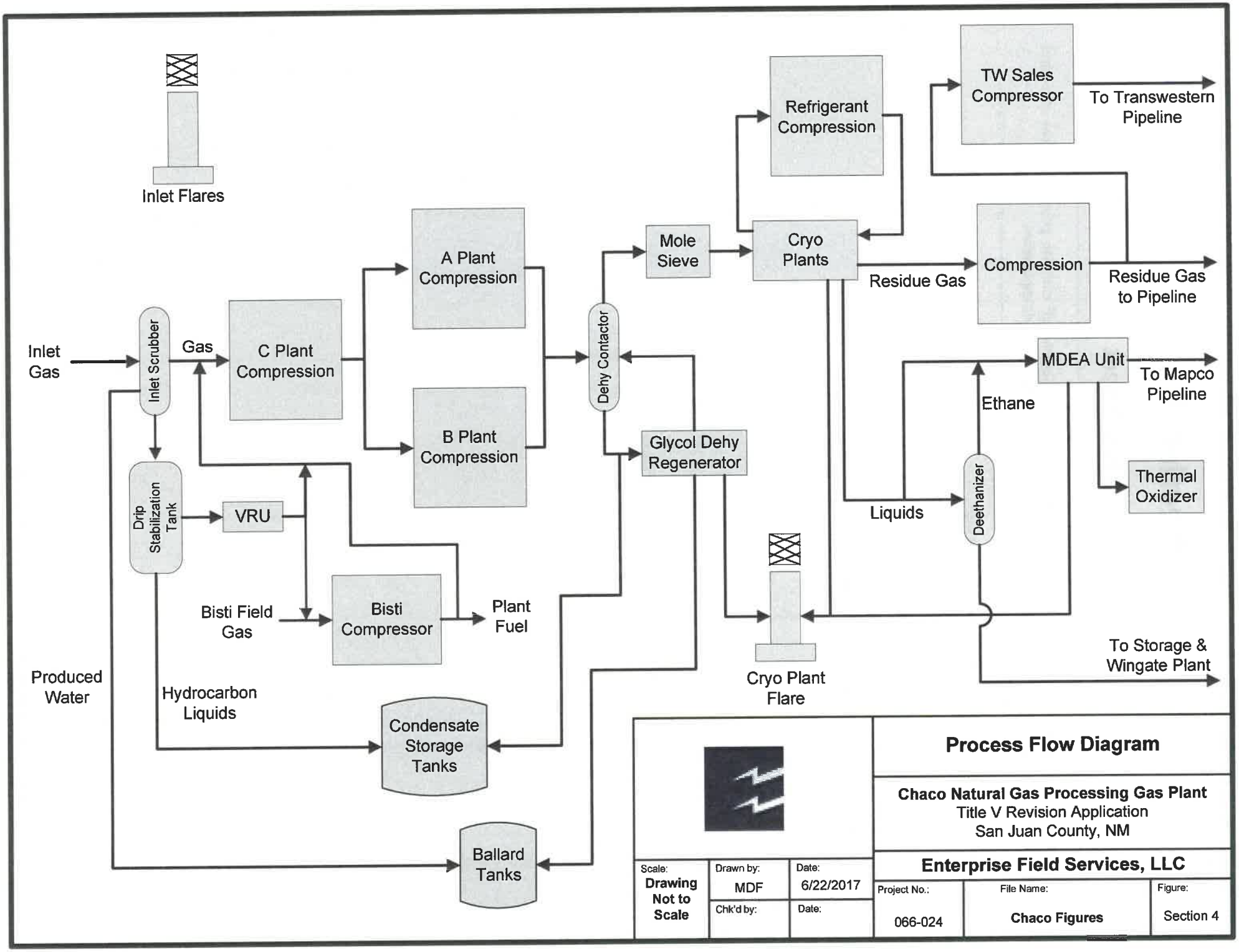
Inlet Flares
Inlet Gas
Inlet Scrubber
Gas
C Plant Compression
A Plant Compression
B Plant Compression
Dehy Contactor
Mole Sieve
Cryo Plants
Refrigerant Compression
TW Sales Compressor
To Transwestern Pipeline
Residue Gas
Compression
Residue Gas to Pipeline
MDEA Unit
To Mapco Pipeline
Ethane
Thermal Oxidizer
Deethanizer
Liquids
Glycol Dehy Regenerator
Drip Stabilization Tank
VRU
Bisti Field Gas
Bisti Compressor
Plant Fuel
Cryo Plant Flare
To Storage & Wingate Plant
Produced Water
Hydrocarbon Liquids
Condensate Storage Tanks
Ballard Tanks
Process Flow Diagram
Chaco Natural Gas Processing Gas Plant
Title V Revision Application
San Juan County, NM
Enterprise Field Services, LLC
Scale: Drawing Not to Scale
Drawn by: MDF
Date: 6/22/2017
Chk'd by:
Date:
Project No.: 066-024
File Name: Chaco Figures
Figure: Section 4

Section 5

Plot Plan Drawn To Scale

A **plot plan drawn to scale** showing emissions points, roads, structures, tanks, and fences of property owned, leased, or under direct control of the applicant. This plot plan must clearly designate the restricted area as defined in UA1, Section 1-D.12. The unit numbering system should be consistent throughout this application.

A plot plan is included on the following page.

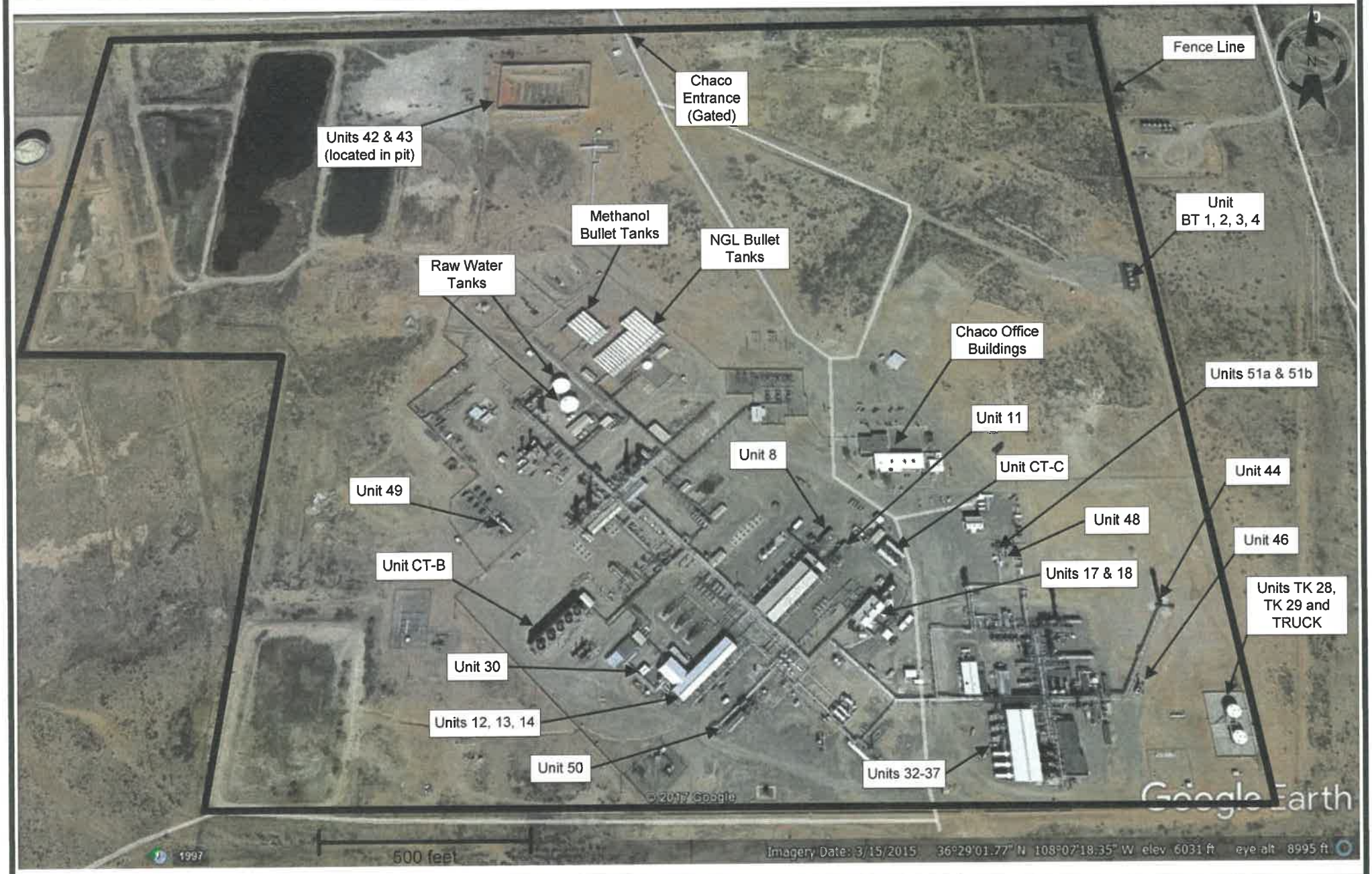

ALLIANT ENVIRONMENTAL, LLC	**Facility Plot Plan**		**Chaco Natural Gas Processing Plant** Title V Revision Application, San Juan County, NM		
Property Line: —	Drawn by: MDF Chk'd by:	Date: 6/12/2017 Date:	**Enterprise Field Services, LLC**	Project No.: 066-024	File Name: **Plot Plan**	Figure: Section 5

Section 6

All Calculations

Show all calculations used to determine both the hourly and annual controlled and uncontrolled emission rates. All calculations shall be performed keeping a minimum of three significant figures. Document the source of each emission factor used (if an emission rate is carried forward and not revised, then a statement to that effect is required). If identical units are being permitted and will be subject to the same operating conditions, submit calculations for only one unit and a note specifying what other units to which the calculations apply. All formulas and calculations used to calculate emissions must be submitted. The "Calculations" tab in the UA2 has been provided to allow calculations to be linked to the emissions tables. Add additional "Calc" tabs as needed. If the UA2 or other spread sheets are used, all calculation spread sheet(s) shall be submitted electronically in Microsoft Excel compatible format so that formulas and input values can be checked. Format all spread sheets and calculations such that the reviewer can follow the logic and verify the input values. Define all variables. If calculation spread sheets are not used, provide the original formulas with defined variables. Additionally, provide subsequent formulas showing the input values for each variable in the formula. All calculations, including those calculations are imbedded in the Calc tab of the UA2 portion of the application, the printed Calc tab(s), should be submitted under this section.

Tank Flashing Calculations: The information provided to the AQB shall include a discussion of the method used to estimate tank-flashing emissions, relative thresholds (i.e., NOI, permit, or major source (NSPS, PSD or Title V)), accuracy of the model, the input and output from simulation models and software, all calculations, documentation of any assumptions used, descriptions of sampling methods and conditions, copies of any lab sample analysis. If Hysis is used, all relevant input parameters shall be reported, including separator pressure, gas throughput, and all other relevant parameters necessary for flashing calculation.

SSM Calculations: It is the applicant's responsibility to provide an estimate of SSM emissions or to provide justification for not doing so. In this Section, provide emissions calculations for Startup, Shutdown, and Routine Maintenance (SSM) emissions listed in the Section 2 SSM and/or Section 22 GHG Tables and the rational for why the others are reported as zero (or left blank in the SSM/GHG Tables). Refer to "Guidance for Submittal of Startup, Shutdown, Maintenance Emissions in Permit Applications (http://www.env.nm.gov/aqb/permit/app_form.html) for more detailed instructions on calculating SSM emissions. If SSM emissions are greater than those reported in the Section 2, Requested Allowables Table, modeling may be required to ensure compliance with the standards whether the application is NSR or Title V. Refer to the Modeling Section of this application for more guidance on modeling requirements.

Glycol Dehydrator Calculations: The information provided to the AQB shall include the manufacturer's maximum design recirculation rate for the glycol pump. If GRI-Glycalc is used, the full input summary report shall be included as well as a copy of the gas analysis that was used.

Road Calculations: Calculate fugitive particulate emissions and enter haul road fugitives in Tables 2-A, 2-D and 2-E for:

1. If you transport raw material, process material and/or product into or out of or within the facility and have PER emissions greater than 0.5 tpy.
2. If you transport raw material, process material and/or product into or out of the facility more frequently than one round trip per day.

Significant Figures:

A. All emissions standards are deemed to have at least two significant figures, but not more than three significant figures.

B. At least 5 significant figures shall be retained in all intermediate calculations.

C. In calculating emissions to determine compliance with an emission standard, the following rounding off procedures shall be used:

(1) If the first digit to be discarded is less than the number 5, the last digit retained shall not be changed;

(2) If the first digit discarded is greater than the number 5, or if it is the number 5 followed by at least one digit other than the number zero, the last figure retained shall be increased by one unit; **and**

(3) If the first digit discarded is exactly the number 5, followed only by zeros, the last digit retained shall be rounded upward if it is an odd number, but no adjustment shall be made if it is an even number.

(4) The final result of the calculation shall be expressed in the units of the standard.

Control Devices: In accordance with 20.2.72.203.A(3) and (8) NMAC, 20.2.70.300.D(5)(b) and (e) NMAC, and 20.2.73.200.B(7) NMAC, the permittee shall report all control devices and list each pollutant controlled by the control device

regardless if the applicant takes credit for the reduction in emissions. The applicant can indicate in this section of the application if they chose to not take credit for the reduction in emission rates. For notices of intent submitted under 20.2.73 NMAC, only uncontrolled emission rates can be considered to determine applicability unless the state or federal Acts require the control. This information is necessary to determine if federally enforceable conditions are necessary for the control device, and/or if the control device produces its own regulated pollutants or increases emission rates of other pollutants.

All calculations are from previous applications and have been previously approved by the NMED.

Emissions units at the facility include the following:

- Two Caterpillar G3616 SITA compressor engines equipped with two-way catalytic converters (units 8 and 11)
- Two Clark TLA-10 compressor engines (units 12 and 14)
- One Clark TLA-10 compressor engine equipped with a catalyst (unit 13)
- Two GE Frame 5 turbines (units 17 and 18)
- One Detroit Diesel 8V-921 standby air compressor, limited to 500 hours of operation per year
- Three Caterpillar G3608 SITA compressor engines equipped with catalytic converters (units 32 through 34)
- Three Solar Mars T-15000 turbines (units 35 through 37)
- Three flares (units 42 through 44)
- One thermal oxidizer (unit 46)
- One heater (unit 48)
- One Solar Taurus 60-7000S sales gas turbine (unit 49)
- One Caterpillar G3612 TALE (Bisti 8) compressor engine (unit 50) equipped with a catalytic converter
- One glycol dehydration unit fired by two identical reboilers (unit 51a) and a controlled vent (unit 51b)
- Two condensate storage tanks (TK 28 and TK 29)
- Bisti produced water tank (TK 49)
- Process fugitives (F-001 through F-008; however lean oil plant fugitives (F-007) are removed)
- Tank fugitives (F-009)
- Cooling towers (CT-B and CT-C)
- Ballard Tanks (BT1, 2, 3, 4)
- Condensate Truck Loading (TRUCK)
- Insignificant units including various low-vapor pressure storage tanks

This application proposes no changes to these units. PM emissions identified here were included in earlier applications, but not explicitly identified on the forms. PM emissions were calculated with HAPCalc and were included on the HAPCalc printouts given in previous applications.

NOx and CO emissions presented here are calculated based on test or manufacturers' data as appropriate and as identified in the relevant section, below. SO2 emissions from combustion units are calculated based on fuel consumption and a maximum fuel total sulfur content of 5 gr/100 scf.

HAP emission rates are calculated from the best available data from either HAPCalc or AP-42 and have not been directly measured. They are presented for informational purposes only, and are not intended to be enforceable limits. As a conservative measure, HAP emissions were calculated with the emission factor (EF) set resulting in maximum potential emissions for each unit type.

All fuel gas was assumed to have a heating value of 900 Btu per standard cubic foot (Btu/scf) for purposes of calculating gas volumes and emissions. This is a lower heating value for natural gas and results in conservatively high fuel consumption and emissions. All fuel gas is sweet natural gas of pipeline quality, containing no more than 5 grains of sulfur per 100 standard cubic feet (5 gr/100 scf).

Stack parameters are estimated from the best available resources. In some cases no data is available for stack temperature and/or flow; temperature is estimated based on general engineering knowledge and flow is calculated based on generic "F" factors.

Units 8 & 11
Units 8 and 11 (A8 and A11) are Caterpillar G3616 SITA turbocharged, four-stroke, reciprocating natural gas engines. The units have been fitted with two-way catalytic converters for 90% control of CO and 65% control of VOCs. These units are increment-consuming, replacing retired baseline Cooper-Bessemer GMWC-10's.

Horsepower was derated from the sea level value using NMED's recommended derate procedure for turbocharged engines (3% per 1000 feet above 4000 feet). Uncontrolled emissions for units 8 and 11 were calculated based on manufacturer's data. Controlled emissions were calculated based on the catalytic converter manufacturer's guaranteed control efficiencies for CO and VOCs.

Fuel consumption, stack temperature, and exhaust flow were also provided by the manufacturer.

Calculation sheets and support data for these units have been duplicated from the 1995 application for NSR Permit 1555-M1, and are included in this element for reference. SO_2 emissions were recalculated in the 1555-M3 permit application based on the fuel consumption and a maximum fuel total sulfur content of 5 gr/100 scf. HAPs from these units were calculated using the most recent version of GRI-HAPCalc, and are attached. As a conservative measure, the 65% VOC control efficiency of the catalytic converter was not applied to the calculated HAPs.

Units 12 Through 14
Units 12, 13, and 14 (B1, B2, and B3) are Clark TLA-10 turbocharged, ten-cylinder, two-stroke, natural gas reciprocating engines that have been retrofitted with controlled rapid-burn fuel cells for approximately 50% control of NOx emissions. Unit 13 is also equipped with a catalyst for 90% control of CO.

Emission calculations and manufacturer's and test data for these units are included in this element in the interest of completeness, and to facilitate future evaluation of increment consumption. Both calculations and support information are duplicated from the 1995 application for NSR Permit 1555-M1. SO_2 emissions were recalculated in the 1555-M3 permit application based on the fuel consumption and a maximum fuel sulfur content of 5 gr/100 scf, as per the common industry standard for pipeline-quality natural gas. HAPs from these units were also recalculated in that application using the most recent version of GRI-HAPCalc, as attached.

Units 17 & 18
Units 17 and 18 (C1 and C2) are GE Frame 5 turbines. These turbines were tested by Cubix on April 17 and 18, 1995. The maximum of the two tests was assumed to be representative. Cubix calculated the hp of the units during the test. The load percentage was estimated by dividing the test horsepower by the site rated horsepower provided by the manufacturer rather than the nameplate horsepower (rated at 1000 feet above mean sea level (msl)). The maximum emissions were scaled by this calculated load percentage. A 10% safety factor was added to the maximum NOx and VOC emissions, and a 100% safety factor was added to the maximum CO emissions.

Fuel consumption was taken from the Cubix test data for unit 18, while stack flow was calculated based on the test data for unit 17. Since the waste heat boiler previously associated with unit 18 was removed in NSR Permit 1555-M3, stack parameters for the unit were recalculated. Stack temperatures for both units are now based on Cubix test data for unit 17.

Calculation sheets and test data for these units are included in this element, both as duplicated from the 1995 application for NSR Permit 1555-M1. Stack parameters calculated for unit 18 when exhausting through the waste heat boiler have been crossed out, as they are no longer valid, and the updated calculation sheet for stack parameters is included, as duplicated from the application for 1555-M3. SO_2 emissions have been calculated based on the fuel consumption and a maximum fuel sulfur content of 5 gr/100 scf. HAPs from units 17 and 18 were recalculated in the NSR Permit 1555-M3 permit application using the most recent edition of GRI-HAPCalc, Version 3.01, as attached.

Unit 30
Unit 30 is an air compressor powered by a Detroit Diesel 8V-92T engine.

This unit operates intermittently, and is equipped with a meter that measures operating hours. The unit operates less than 500 hours per year. This schedule is limited by need for the air compressor, which is only used to cold-start engines and/or turbines when plant compressed air is unavailable; it is therefore inherently limited in operating hours.

Emissions are calculated based on AP-42 emission factors. Stack parameters are based on engineering estimates and observed parameters.

Units 32 through 34
Units 32, 33, and 34 (Cryo 1-1, 2-1, and 3-1) are Caterpillar G3608 SITA turbocharged, eight-cylinder, four-stroke reciprocating engines. The units are equipped with catalytic converters for 90% control of CO emissions, and 65% control of VOCs.

Horsepower was derated from the sea level value using NMED's recommended derate procedure for turbocharged engines (3% per 1000 feet above 4000 feet). Potential emissions for units 31 through 34 were calculated based on manufacturer's data. CO and VOC emissions after catalyst control were calculated based on guaranteed control efficiencies from the catalyst manufacturer's data.

Fuel consumption, stack temperature, and exhaust flow were provided by the manufacturer.

Emission calculations and manufacturer's data for these units are included in this element. Both calculations and support information are duplicated from the 1995 application for NSR Permit 1555-M1. SO_2 emissions were recalculated in the application for 1555-M3 based on the units' fuel consumption and a maximum fuel sulfur content of 5 gr/100 scf. HAPs from these units were also recalculated in that application using the most recent edition of GRI-HAPCalc, Version 3.01, as attached.

Units 35 Through 37
Units 35, 36, and 37 (Cryo 1-2, 2-2 and 3-2) are Solar Mars T-15000 turbines used for residue compression in the cryogenic plant.

Horsepower was derated from the sea level value using NMED's recommended derate procedure for turbines (2% per 1000 feet above 4000 feet). Emissions for these turbines were calculated based on manufacturer's data. VOC emissions have been assumed to be 12% of the THC emissions (approximately twice the NMHC-THC ratio in Table 3.2-2 of AP-42).

Fuel consumption, stack temperature, and exhaust flow were provided by the manufacturer.

Emission calculations and manufacturer's data for these units are attached here. SO_2 emissions were recalculated in the NSR Permit 1555-M3 application based on the fuel consumption and a maximum fuel sulfur content of 5 gr/100 scf. HAPs were recalculated in the application for NSR Permit 1555-M3 using GRI-HAPCalc 3.01, and are also attached.

Units 42 & 43
Units 42 and 43 (flare 1 & 2, or inlet flare) are a staged flare complex located in the northwest section of the plant. This flare contains one candlestick flare stack, unit 42, and a four-stage ground level flare, unit 43. Though identified separately, units 42 and 43 are actually one ground flare.

The flare functions as a process flare and emergency blowdown and safety flare. Under normal conditions, the candlestick flare (unit 42) operates on pilot gas, purge gas and incidental emissions from compressor station vents, drain valves, relief valves, etc. from the inlet end of the plant.

The pilot and purge gas is residue gas, which is mostly methane. The above ground flare pilot fuel flow was conservatively estimated at 200 scf/hr. The pilot and purge gases were assumed to have a heat value of 900 Btu/scf, since they are primarily methane.

In addition, NGL and methanol bullet tanks, storage tank relief valves, pressure regulator valves, drain valves, and vents associated with the inlet compression are tied to the flare for safety. The maximum mass of this type of material flared is approximately 100 lb/hr, based on the nominal design rate described for small relief system leaks ("Condition #4") in a March 4, 1993 memo. ("Condition #3", described as the normal operating condition in the 1993 memo is no longer valid since the lean oil process and third party amine treater have been removed.) The heating value of this gas was calculated based on a laboratory analysis of the dehydrator inlet gas, and is approximately 929.22 Btu/scf.

Unit 43 is the other part of the staged flare, consisting of 197 flare tips of which 21 are active. Each tip is 8 feet high as measured above the base of the pit. The ground level flares do not operate during routine conditions.

NOx and CO emissions have been calculated under the normal operating conditions described above using TNRCC GP-109 emission factors. The TNRCC guidance document provides separate factors for low Btu content (less than 1000 Btu/scf) and high Btu content gas. VOC and HAP emissions are calculated from the mass fraction of the wet dehydrator gas inlet stream, the specific volume of the gas stream components, the total volumetric flow,), and an assumed 98% destruction efficiency. H_2S and SO_2 emissions for routine operation of unit 42 are calculated based on the fuel consumption and a maximum fuel

sulfur content of 0.25 gr H_2S /100 scf and 5 gr S/100 scf, and a 98% destruction of H_2S by combustion. As a conservative measure, the SO_2 composition is based on a 100% molar conversion of H_2S to SO_2.

An average heat release was calculated based on the calculated flow rate and fuel heating value. For the modeling of this unit, a stack temperature of 1000°C and a stack velocity of 20 meters per second were used in accordance with NMED modeling guidelines. An effective stack diameter was also calculated per NMED guidelines. A stack height of 25 feet above grade, as measured, was used for modeling routine operation of the above ground flare.

Emissions under upset conditions were also calculated based on the emission factors described above. In non-routine operation, unit 42 operates as stage one of a staged flare system. Under upset conditions, this flare and unit 43 receive up to 1,475,507 lb/hr of gas ("Condition #1" in the 1993 memo) from an absolute worst-case scenario (a liquids storage tank fire with no effective fire-fighting or drainage of hydrocarbons from the liquids storage tank area). Again, the pilot and purge gases will have a lower heating value of 900 Btu/scf, while upset gases will have an average heating value of 929.22 Btu/scf, as calculated for wet gas. Stack parameters were assumed in accordance with NMED guidelines. A stack height of 9 feet above grade was used in previous applications for upset modeling of units 42 and 43, based on the height above grade of the windbreak/radiation shield surrounding the flare pit.

Unit 44

Unit 44 (flare 3, or cryo flare) is a flare used as a process flare, a SSM and unit blowdown flare, and an emergency control device for the cryogenic liquids plant. Under normal conditions, the cryo flare operates on pilot gas with a flow of approximately 200 scf/hr (per manufacturer's data), and condenser off-gas from the glycol dehydration unit is routed to the flare for destruction. This emissions point will also serve to control emissions from the MDEA sweetening unit. This unit is increment-consuming.

The pilot gas was assumed to have a heat value of 900 Btu/scf, since it is primarily methane.

Gas flow from the dehydrator condenser vent is 300 scf/hr, as obtained from GRI-GLYCalc 4.0 output. A recent flow test and gas analysis of the flare input have been used to update the flare emissions during normal operations. These calculations are included in this section.

NOx and CO emissions have been calculated under the normal operating conditions described above using the TNRCC GP-109 emission factors. The TNRCC guidance document provides separate factors for low Btu content (less than 1000 Btu/scf) and high Btu content gas. VOC and HAP emissions were calculated by applying an assumed 98% destruction efficiency to the controlled regenerator emissions calculated by GRI-GLYCalc.

The unit will now control H2S emissions from the MDEA sweetening unit when the thermal oxidizer (unit 46) is down. Flare 44 is assumed to have the same destruction efficiency, 98%, as Unit 46. SO2 emissions are assumed to be the result of 100% conversion of H2S to SO2; as a conservative measure, 2% of the H2S is assumed to not be destroyed.

An average heat release was calculated based on the calculated flow rate and fuel heating value. For the modeling of this unit, a stack temperature of 1000°C and a stack velocity of 20 meters per second were used in accordance with NMED modeling guidelines. An effective stack diameter was also calculated per NMED guidelines.

Emissions under upset conditions were calculated based on the emission factors described above and a maximum designed flow rate of 380,270 scf/hr. It is assumed that there are no more than 300 events per year, each lasting a total of one hour. Stack parameters were assumed in accordance with NMED guidelines.

Unit 46

Unit 46 is a thermal oxidizer for H_2S and VOC combustion.

NO_x, CO, and VOC emissions for this unit have been calculated based on manufacturer's data. SO_2 emissions have been calculated based on a maximum H2S flow rate to the unit of 0.1 lb-mol/hr, assuming complete combustion of the H_2S to SO_2.

Stack parameters were taken from manufacturer's data.

Emission calculations and support data for unit 46 are included in this element, both as duplicated from the 1995 application for NSR Permit 1555-M1. HAPs from this unit are negligible.

Unit 48

Unit 48 (HAT) is a HRC natural gas-fired heater.

NO_x, CO, and VOC emissions from this unit are calculated from manufacturer's data and AP-42 emission factors. The more conservative of the two calculations for each pollutant with a manufacturer provided emission factor was used, with a safety factor, to establish the emission limits. SO_2 emissions were calculated based on fuel consumption and a maximum fuel sulfur content of 5 g S/100 scf.

Stack temperature, diameter, and height were determined from the design parameters for the unit. Stack flow is calculated from the "F" factor for natural gas combustion.

Emission calculations and support data for this unit are included in this element. HAPs were calculated in the 1555-M3 permit application using GRI-HAPCalc, Version 3.01, and are duplicated here for reference.

Unit 49
Unit 49 (TW) is a Solar Taurus 60-7000S natural gas-fired turbine that provides compression for gas sales to Transwestern Pipeline.

Horsepower of the unit is based on manufacturer's data under site conditions. NOx, CO, and VOC emissions for unit 49 are also based on manufacturer's data. SO_2 emissions were calculated based on fuel consumption and a maximum fuel sulfur content of 5 g S/100 scf, or 0.00714 lb S/Mscf

Stack temperature and exhaust flow rate were determined from manufacturer's data, while stack height and diameter are based on engineering estimate.

Emission calculations and manufacturer's data for this unit are attached. HAPs for this unit have been calculated with GRI-HAPCalc, Version 3.01.

Unit 50
Unit 50 (Bisti 8B) is a Caterpillar G3612 TALE four-stroke lean burn natural gas engine. This unit was authorized as a replacement for the former Bisti #8 engine in NSR modification 1555-M3, and is equipped with a catalytic converter for 93% control of CO emissions and 65% control of VOCs.

Horsepower was provided by the manufacturer, then derated from the sea level value using NMED's recommended derate procedure for turbocharged engines (3% per 1000 feet above 4000 feet). NOx, CO, and VOC emissions are based on manufacturer's data. SO_2 emissions were calculated based on fuel consumption and a maximum fuel sulfur content of 5 gS/100 scf.

Stack temperature and exhaust flow rate were also based on manufacturer's data, while stack height and diameter are estimated.

Emission calculations and supporting data for this unit are included in this element. HAPs for this unit were calculated with GRI-HAPCalc 3.01 in the application for 1555-M3.

Unit 51
Unit 51a/b is a natural gas-fired glycol dehydrator equipped with a flash tank and condenser as control devices. Off-gas from the flash tank will be recycled into the inlet gas stream, so flash gas emissions from the unit are zero. The condenser vent gas stream will be routed to the Cryogenic Plant flare, unit 44, for destruction. Produced water from the condenser is transferred to the West Ballard pond.

NOx, CO, and VOC emission calculations for the heaters (Unit 51a) were based on AP-42 data. SO_2 emissions were calculated based on fuel consumption and a maximum fuel sulfur content of 0.25 g S/100 scf. Each burner is equipped with an identical exhaust stack, with a stack diameter of two feet and a height of 29 feet above ground. These calculations are carried-forward from previous applications.

Emission calculations for unit 51b are carried forward from previous applications.

Storage Tanks
The Chaco facility contains a number of liquid storage tanks. All tanks other than Tanks 28 and 29 are insignificant or trivial activities due to vapor pressure, low emissions, or because they are not a source of regulated air pollutants. These tanks are shown in Table 2-B of this application.

Emissions from Chaco's condensate tanks, TK 28 and TK 29, were first calculated in the application for NSR Permit 1555-M3 and in a February 2005 application to modify Operating Permit P116, and later clarified in a December 2005 letter to the Air Quality Bureau. In the letter, Enterprise submitted corrected emission calculations for the tanks which considered the presence of a heated stabilizer upstream of TK28 and TK 29 (driving off all flashing losses from the inlet separator stream) and were based on measured actual separator yields (resulting in higher condensate throughput than originally estimated). These calculations and supporting information, duplicated here for reference, resulted in calculated emissions that are slightly lower than the permit limits (24.0 tons per year of VOCs per tank). As such, Enterprise did not request a change in the VOC limits for Tanks 28 and 29, and seeks to continue to operate under these limits despite actual lower VOC working and breathing losses.

Condensate liquids from the inlet separators at Chaco Natural Gas Processing Plant pass through a heated stabilizer before being deposited in 4000 bbl storage tanks (TK 28 and TK 29). Emissions from the condensate storage tanks (TK 28 and TK 29) have been calculated using EPA's TANKS version 4.0 based on estimated throughput. A profile of the separator liquids was input into TANKS and identified as a new liquid (Separator Liquids). The profile is based on a separator liquid analysis. A copy of the analysis and a breakdown of the components by weight percent are included. Though the emission calculations in Tanks 4.0 show a lower emission rate than is used in the total calculations, no change is requested as it provides a higher emission limit and it is how it has been previously permitted.

Chemical data for some of the tank liquid components were not already in the TANKS database (propane, isobutene, and n-butane). Vapor pressures for these sub-components were estimated using data from *Properties of Gases and Liquids* (Reid, Prausnitz & Poling, 1987).

Ambient temperatures were taken from TANKS for Pueblo, Colorado, due to the elevation and location of the facility. The potential emission rate was estimated in accordance with 40 CFR 63.760 (subpart HH), where anticipated turnovers are multiplied by a factor of 1.2 in order to determine the maximum turnover rate. A VRU efficiency of 98% was used to calculate controlled working and breathing losses due to separator liquids.

Total working and breathing losses from the condensate tanks were determined by adding the VOC and HAP emissions from the inlet separator and glycol dehydrator condenser streams. This is a conservative approach, as it estimates higher total emissions than if the combined liquids were input as a single stream.

Ballard Tanks
The Ballard Tanks receive produced water from the 3-phase inlet separator and the glycol regenerator condenser (Unit 51b). The EPA Water 9 program was used to calculate emissions from the Tanks. Inputs to the Water 9 program included calculated water flow rates from the respective units, analyses of the respective water streams, and default parameters suggested by the Water 9 program.

Fugitive Emissions
F-001 through F-008 are process fugitive emission units. Process fugitives in this application package are as calculated in the original operating permit application; however, in previous applications process fugitives were presented as a single emission unit, while they are now numbered individually, according to source. F-001 are process fugitive emissions from components in field gas service, F-002 from fuel gas, F-003 from acid gas, F-004 from the deethanizer overhead gas, F-005 from condensate, F-006 from NGL, and F-008 from components in refrigerant service. Process fugitive emissions were calculated by multiplying

the EPA emission factors, as appropriate, by the number of each specific type of component. Copies of the relevant portions of the 1995 Title V application and supporting data are included in this element for reference.

F-009 are fugitive emissions from storage tank components. Tank fugitive emission calculations were recalculated in the application for NSR Permit 1555-M3 based on weight fraction estimates from GRI-HAPCalc. Benzene, toluene, ethylbenzene, and xylene (BTEX) concentrations were based on the light liquid service factors from Table 21 of GRI-HAPCalc 3.01. The hexane concentration was taken from Table 4-6 from an earlier version of HAPCalc. Only non-exempt tanks (Tanks 28 and 29) are included in the unit total.

Cooling Tower Emissions
The two cooling towers, CT-B and CT-C are sources of particulate emissions. Calculations are based on the actual and existing tower total dissolved solids and tower design criteria for recirculation rate and drift rate for induced draft cooling towers from AP-42 13.4-1.

SSM Emissions
As indicated in flare discussion, most of the blowdown emissions from the engines and vessels are directed to flares 42/43 or 44. Also included are emissions when scheduled maintenance of the thermal oxidizer takes place and the tail gas from the amine unit is routed to Unit 44. Please refer to the attached calculations for the flared SSM emissions. Note that the flares have been previously modeled under upset conditions, representing a much higher emission rate than the current SSM emissions.

Malfunctions
In addition to the scheduled, routine, and predictable SSM events, the plant occasionally has emissions from malfunctions that are either routed to flares 42/43 or 44 or vented to the atmosphere. Please refer to the attached calculations for the flared SSM emissions. Enterprise is also adding 10.0 TPY of unflared Malfunction emissions.

Storage Tank Emissions

Enterprise Field Services, LLC

Chaco Natural Gas Processing Plant

Units 28 & 29 - Condensate Storage Tanks													
Tank Number	Tank Type	Tank Diameter (ft)	Tank Volume		Annual Throughput					Turnovers	Potential to Emit VOCs		
			(bbl)	(gal)	(bbl)	(gal)	Annual (1000/gal)	Daily (1000/gal)	Hourly (1000/gal)		(lbs/yr)	(lbs/hr)	(TPY)
TK-28	VFR	35	4,000	168,000	120,000	5,040,000	5,040	13.81	0.58	30.0	52,003	5.94	26.00
TK-29	VFR	35	4,000	168,000	120,000	5,040,000	5,040	13.81	0.58	30.0	52,003	5.94	26.00
				Totals:	**240,000**	**10,080,000**	**10,080**	**27.62**	**1.15**		**104,006.56**	**11.87**	**52.00**

Notes:

1) Tank emissions computed using EPA TANKS 4.0.9d., assuming a stabilized natural gas condensate with an average RVP of 12.

Loading Losses

Enterprise Field Services, LLC

Chaco Natural Gas Processing Plant

Unit Number	Loading Description	Throughput [2]	S [3]	P[4]	M [4]	T	Loading Loss [1]	Loading Emissions[5]	
		(gal/yr)		(psia)	(lb/lb-mole)	(R)	(lb/Mgal)	(lb/hr)	(tpy)
Truck	Natural Gas Condensate	10,080,000	0.6	7.89	53	514.5	6.08	42.53	30.62

Data Sources and Notes:

Loading rack VOC emissions calculations are performed in accordance with Section 5.2 of U.S. EPA's Compilation of Air Pollutant Emission Factors, Fifth Edition (1/95 version).

[1] Equation 1 from AP-42 Section 5.2 (06/08):

[2] Estimated from Table A-2.

[3] Table 5.2-1 of AP-42 (01/1995) - S Factor for Submerged loading: dedicated normal service.

[4] Chemical database in the EPA TANKS 4.09d program (based on RVP 12).

[5] Assumes 1440 hours per year loading.

[6] Engineering Specifications

Hazardous Air Pollutant Emissions

Enterprise Field Services, LLC

Chaco Natural Gas Processing Plant

Potential HAP Emissions																
Unit Number	Description	VOC	n-Hexane		Benzene		Toluene		Xylene		Ethylbenzene		2,2,4-Trimethyl		Total HAPs	
		(TPY)	(lb/hr)	(TPY)	(lb/hr)	(TPY)	(lb/hr)	(TPY)	(lb/hr)	(TPY)	(lb/hr)	(TPY)	(lb/hr)	(TPY)	(lb/hr)	(TPY)
TK-28	4,000-bbl VFR Tank	26.0	0.11	0.47	0.013	0.056	0.011	0.047	0.046	0.200	1.72E-04	7.55E-04	5.81E-04	0.0025	0.18	0.78
TK-29	4,000-bbl VFR Tank	26.0	0.11	0.47	0.013	0.056	0.011	0.047	0.046	0.200	1.72E-04	7.55E-04	5.81E-04	0.0025	0.18	0.78
TRUCK	Truck Loading	30.6	0.41	1.81	0.08	0.36	0.25	1.08	0.02	0.10	0.01	0.05	0.007	0.032	0.78	3.43
Total		82.6	0.6	2.8	0.1	0.5	0.3	1.2	0.1	0.5	0.01	0.1	0.01	0.04	1.1	5.0

Pollutant	Max % by wt. [1]	Emissions (lb/hr)	(TPY)
Hexane	5.92	0.63	2.76
Benzene	1.168	0.11	0.47
Toluene	3.516	0.27	1.17
Xylene	0.217	0.11	0.50
Ethylbenzene	0.175	0.01	0.06
2,2,4-Trimethylpentane	0.104	0.01	0.04
Totals:		1.14	4.99

[1] Weight % of HAPs taken from site-specific liquids analysis.

Units:	8, 11	
Description:	CAT G3616 SITA, 4SLB RICE	

ISO Rating:	4445	hp	Mfg. data at sea level
Elevation:	6020	ft MSL	
Derate:	6.06	%	3% derate per 1000 ft over 4000 ft
Site Rating:	4176	hp	ISO Rating * (1-%Derate)
Fuel Consumption:	6590	Btu/hp-hr	Mfg. data
Fuel Consumption:	27.5	MMBtu/hr	Fuel Consumption (Btu/hp-hr) * Derate hp * 1MMBtu/10^6Btu
Fuel Heating Value:	900	Btu/scf	Nominal
Fuel Consumption:	30.6	Mscf/hr	Fuel Consumption (MMBtu/hr) / Fuel Heating Value (Btu/scf) * 1000Mscf/MMscf

Criteria Pollutants Uncontrolled Emissions

NO_x	CO	VOC	SO_2[3]	TSP[5]	PM_{10}[4]	$PM_{2.5}$[4]		
0.70	1.90	0.50					EF (g/hp-hr)	Mfg. data
			5				gr S/scf	Nominal, natural gas
6.4	17.5	4.6	0.44	0.59	0.59	0.59	lb/hr[1]	
28.2	76.6	20.2	1.9	2.6	2.6	2.6	tons/yr[2]	

Criteria Pollutants Controlled Emissions

NO_x	CO	VOC	SO_2[3]	TSP[5]	PM_{10}[4]	$PM_{2.5}$[4]	
6.4	17.5	4.6	0.44	0.59	0.59	0.59	lb/hr (uncontrolled)
	90%	65%					Control Efficiency[5]
6.4	1.8	1.6	0.4	0.59	0.59	0.59	lb/hr (controlled)[6]
28.2	7.7	7.1	1.9	2.6	2.6	2.6	tons/yr (controlled)[2]

[1] Hourly emission rates calculated using one of the appropriate equations:
lb/hr = EF (g/hp-hr) * Engine hp (4176) * 1lb/453.592g
Particulate lb/hr = tons/yr * 1yr/8760hr * 2000lb/ton
SO_2 lb/hr = 5gr/100scf * 1lb/7000gr * 64lb SO2/32lb S * Fuel Consumption (Mscf/hr)

[2] tons/yr = lb/hr * 8760 hr/yr * 1ton/2000lb

[3] SO_2 emission calculated assuming a maximum sulfur content of 5gr/100scf and full conversion to SO_2.

[4] Assumed TSP = PM_{10} = $PM_{2.5}$; annual emission rate from GRI-HAPCalc 3.01

[5] Control for CO and VOC emissions provided by Houston Industrial Silencer catalytic converter

[6] lb/hr (controlled) = uncontrolled lb/hr * (1 - Control Eff)

HAP Emissions

Annual emission rates from GRI-HAPCalc; hourly emission calculated assuming 8760hr/yr of operation

Acetaldehyde	Acrolein	Benzene	HCHO	n-Hexane	Methanol	Styrene	Toluene	2,2,4-TMP	Xylenes	Total HAPs	
0.0847	0.0798	0.0480	0.9146	-	0.1840	0.0004	0.0169	-	0.0059	1.3635	lb/hr
0.3710	0.3497	0.2101	4.0058	-	0.8058	0.0016	0.0742	-	0.0259	5.9722	tons/yr

Stack Parameters

Flow:	25278	acfm	Mfg. data
Diameter:	2.33	ft	Measured
Velocity:	98.81	ft/sec	Calculated from acfm and diameter
Height:	22	ft	
Temperature:	825	F	Mfg. data

Units:	12 - 14
Description:	Clark TLA10, 2SLB RICE

ISO Rating:	3400	hp	Mfg. data at sea level
Elevation:	6020	ft MSL	
Derate:	6.06	%	3% derate per 1000 ft over 4000 ft
Site Rating:	3194	hp	ISO Rating * (1-%Derate)
Fuel Consumption:	8418	Btu/hp-hr	Testing data
Fuel Consumption:	26.9	MMBtu/hr	Fuel Consumption (Btu/hp-hr) * Derate hp
Fuel Heating Value:	900	Btu/scf	Nominal
Fuel Consumption:	29.9	Mscf/hr	Fuel Consumption (MMBtu/hr) / Fuel Heating Value (Btu/scf)

Criteria Pollutants Uncontrolled Emissions

NO_x	CO	VOC	SO_2[3]	TSP[4]	PM_{10}[4]	$PM_{2.5}$[4]		
			5				gr S/scf	nominal, natural gas
99.4	17.2	2.48					EF (lb/hr)	Test data
99.40	17.24	2.48	0.43	1.12	1.12	1.12	lb/hr[1]	
435.37	75.51	10.86	1.87	4.91	4.91	4.91	tons/yr[2]	

Criteria Pollutants Controlled Emissions[5]

NO_x	CO	VOC	SO_2	TSP[4]	PM_{10}[4]	$PM_{2.5}$[4]	
99.4	17.2	2.48	0.43	1.1	1.1	1.1	lb/hr (uncontrolled)
	90%						Control Efficiency[5]
49.7	1.8	2.48	0.43	1.1	1.1	1.1	lb/hr (controlled)[6]
217.7	7.7	10.9	1.9	4.9	4.9	4.9	tons/yr (controlled)

[1] Hourly emissions for particulate = tons/yr * 1yr/8760hr * 2000lb/ton
lb/hr SO_2 = 5gr/100scf * 1lb/7000gr * 64lb SO2/32lb S * Fuel Consumption (Mscf/hr)
lb/hr PM = tons/yr * 1yr/8760hr * 2000lb/ton

[2] tons/yr = lb/hr * 8760hr/yr * 1ton/2000lb
tons/yr for particulate from GRI-HAPCalc 3.01

[3] SO_2 emission calculated assuming a maximum sulfur content of 5gr/100scf and full conversion to SO_2.

[4] Assumed TSP = PM_{10} = $PM_{2.5}$

[5] Controlled emissions only for unit 13; units 12 and 14 operate uncontrolled

[6] Control for CO provided by Houston Industrial Silencer catalytic converter for unit 13
lb/hr (controlled) = lb/hr (uncontrolled) * (1 - Control Eff)
Tested NO_x emissions were 99.4lb/hr; retrofit provided a 50% reduction for all units

HAP Emissions

Annual emission rates from GRI-HAPCalc; hourly emission calculated assuming 8760hr/yr of operation

Acetaldehyde	Acrolein	Benzene	HCHO	n-Hexane	Methanol	Styrene	Toluene	2,2,4-TMP	Xylenes	Total HAPs	
0.1663	0.0912	0.0484	1.5807	0.1106	0.1003	0.1747	0.0631	0.1945	0.0889	2.6938	lb/hr
0.7283	0.3993	0.2118	6.9234	0.4844	0.4391	0.7654	0.2765	0.8517	0.3895	11.7988	tons/yr

Stack Parameters

Flow:	36,108	acfm	Testing data
Diameter:	2.44	ft	Mesured
Velocity:	129	ft/sec	Calculated using acfm and diameter
Height:	35	ft	Mesured
Temperature:	643	F	Testing data

Units:	17, 18	
Description:	GE Frame 5 NG Turbine	

ISO Rating:	19500	hp	Mfg. data at sea level
Elevation:	6020	ft MSL	
Derate:	4.04	%	2% derate per 1000 ft over 4000 ft
Site Rating:	18712	hp	ISO Rating * (1-%Derate)
Site Rating:	16200	hp	Mfg. data
Fuel Heating Value:	1245	Btu/scf	Cubix test data
Fuel Consumption:	145.3	Mscf/hr	Testing data
Fuel Consumption:	180.9	MMBtu/hr	Fuel Consumption (Mscf/hr) * HHV (Btu/scf)

Permitted emissions for these units were determined by comparing initial permit limits with testing data in a previous permitting action.
If the testing emission rates with a safety factor resulted in a higher emission rate than the permitted value, the testing result was used.
If the permitted emission rate was higher, this value was used. The calculations below show this iterative process.

Emission Calculations

	NO_x	CO	VOC[1]	SO_2[2]	TSP[3]	PM_{10}[3]	$PM_{2.5}$[3]	
Previous Permit	1.634	0.892	0.0					g/hp-hr [Previously permitted C-1 emission rate @ 15,955 hp]
Limits for Unit 17	57.5	31.4	0.0					lb/hr [g/hp-hr * 15,955hp * 1lb/453.592g]
(C-1)	251.7	137.5	0.0					tons/yr [lb/hr * 8760hr/yr * 1ton/2000lb]
Previous Permit	1.913	0.886	0.0					g/hp-hr [Previously permitted C-2 emission rate @ 16,117 hp]
Limits for Unit 18	68.0	31.5	0.0					lb/hr [g/hp-hr * 16,117 hp * 1lb/453.592g]
(C-2)	297.7	137.9	0.0					tons/yr [lb/hr * 8760hr/yr * 1ton/2000lb]
	49.22	2.56	0.2462					lb/hr [Test data for C-1 at 13,471hp (83% load)]
	83.2	83.2	83.2					% load [tested hp (13,471) / site hp (16,200 - mfg. data)]
Testing Data for	59.2	3.1	0.30					lb/hr, adjusted [lb/hr / %load]
Unit 17 (C-1)	10.0%	100%	10%					Safety factor
	65.1	6.2	0.33					lb/hr with safety factor [lb/hr, adjusted * (1 + safety factor)]
	285.2	27.0	1.4					tons/yr [lb/hr (with safety factor) * 8760hr/yr * 1ton/2000lb]
	62.16	11.11	0.5690					lb/hr [Test data for C-2 at 14,422hp (89% load)]
	89.0	89.0	89.0					% load [tested hp (14,422) / site hp (16,200 - mfg. data)]
Testing Data for	69.8	12.5	0.64					lb/hr, adjusted [lb/hr / %load]
Unit 18 (C-2)	12.5%	10%	10%					Safety factor
	78.5	13.7	0.70					lb/hr with safety factor [lb/hr, adjusted * (1 + safety factor)]
	343.9	60.1	3.1					tons/yr [lb/hr (with safety factor) * 8760hr/yr * 1ton/2000lb]
				2.1				lb/hr
	78.5	**31.5**	**0.70**	**2.1**	**1.0**	**1.0**	**1.0**	lb/hr [maximum of the 4 calculations above]
	343.9	**137.9**	**3.1**	**9.1**	**4.5**	**4.5**	**4.5**	tons/yr [maximum of the 4 calculations above]

Footnotes for calculations on previous page

[1] Testing on the units was for THC. VOC is assumed to be 12% of THC for unit 18, based on AP-42 ratio

[2] SO_2 emission calculated assuming a maximum sulfur content of 5gr/100scf and full conversion to SO_2.
lb/hr = 5gr/100scf * 1lb/7000gr * 64lb SO2/32lb S * Fuel Consumption (Mscf/hr)

[3] Assumed TSP = PM_{10} = $PM_{2.5}$; annual emission rate from GRI-HAPCalc 3.01

HAP Emissions

Annual emission rates from GRI-HAPCalc; hourly emission calculated assuming 8760hr/yr of operation

Acetaldehyde	Acrolein	Benzene	HCHO	n-Hexane	Methanol	Styrene	Toluene	2,2,4-TMP	Xylenes	Total HAPs	
0.6186	0.0093	0.0192	0.6044	0.0537	-	-	0.0147	0.0573	0.0444	1.4843	lb/hr
2.7094	0.0406	0.0841	2.6471	0.2353	-	-	0.0642	0.2509	0.1944	6.5014	tons/yr

Unit 17 Stack Parameters

Flow:	7,990,000	scf/hr	Cubix test data
Flow:	1,333,167	scf/min	Calculated
Temperature:	766	F	Cubix test data
Ambient Pressure:	23.98	in. Hg	Cubix test data
Flow:	391,737	acfm	scf/min * P_{std}/P_{stack} * T_{stack}/T_{std}
Stack Area:	40.25	sq. ft	Cubix test data (7' x 5.75')
Velocity:	162	ft/sec	Calculated Flow / Area
Equiv. Diameter	7.16	ft	Calculated
Height:	41	ft	Measured

Unit 18 Stack Parameters

Flow:	7,990,000	scf/hr	Cubix test data
Flow:	1,333,167	scf/min	Calculated
Temperature:	766	F	Cubix test data
Flow:	385,972	acfm	scf/min * P_{std}/P_{stack} * T_{stack}/T_{std}
Stack Area:	40	sq. ft	Cubix test data (7' x 5.75')
Velocity:	161	ft/sec	Calculated
Equiv. Diameter	7.14	ft	Calculated
Height:	40.25	ft	Measured

Unit:	30	
Description:	Detroit Diesel 8V 921 standby air compressor	

ISO Rating:	450	hp	Mfg. data at sea level
Elevation:	6020	ft MSL	
Derate:	6.06	%	3% derate per 1000 ft over 4000 ft
Site Rating:	423	hp	ISO Rating * (1-%Derate)
Fuel Consumption:	25.4	gal/hr	Mfg. data
Fuel Heating Value:	19300	Btu/lb	Nominal
Fuel Density:	7.1	lb/gal	
Heat Input:	3.474	MMBtu/hr	
Annual Fuel Usage:	12676	gal/yr	
Operating Hours:	500	hours	Maximum yearly usage

Criteria Pollutants Uncontrolled Emissions

NO_x	CO	VOC	SO_2	TSP[2]	PM_{10}[2]	$PM_{2.5}$[2]	
0.031	0.00668	0.0025141	0.00205	0.0022	0.0022	0.0022	EF (lb/hp-hr)[1]
14.0	3.0	1.1	0.92	1.0	1.0	1.0	lb/hr[3]
61.1	13.2	5.0	4.0	4.3	4.3	4.3	tons/yr[4]

Criteria Pollutants Controlled Emissions[5]

NO_x	CO	VOC	SO_2	TSP[2]	PM_{10}[2]	$PM_{2.5}$[2]	
14.0	3.0	1.1	0.92	1.0	1.0	1.0	lb/hr
3.5	0.75	0.28	0.23	0.25	0.25	0.25	tons/yr

[1] Emission factors from AP-42 Table 3.3-1
[2] Assumed TSP = PM_{10} = $PM_{2.5}$
[3] Hourly emission rates calculated using the following equation:
lb/hr = EF (lb/hp-hr) * ISO engine hp
[4] tons/yr = lb/hr * 8760 hr/yr * 1ton/2000lb
[5] Controlled emissions calculated based on a maximum of 500 hours/yr

HAP Emissions
Calculated using emission factors from AP-42 Table 3.3-2 (10/1996)

Acetaldehyde	Acrolein	Benzene	HCHO	n-Hexane	Methanol	Styrene	Toluene	2,2,4-TMP	Xylenes	Total HAPs	
7.67E-04	9.25E-05	9.33E-04	-	-	-	-	4.09E-04	-	2.85E-04	0.0063704	lb/MMBtu
0.0027	0.0003	0.0032	-	-	-	-	0.0014	-	0.0010	0.0221	lb/hr
0.00067	0.000080	0.00081	-	-	-	-	0.00036	-	0.00025	0.0055	tons/yr

Stack Parameters

Temperature:	500	F	Engineering estimate
Height:	16	ft	estimated
Diameter:	0.75	ft	estimated
Moisture:	10	%	nominal
O_2:	15	%	nominal
O_2 F-Factor:	9190	dscf/MMBtu	Method 19
Site Pressure:	23.95	in. Hg	
Flow:	1884.9002	dscf/min	heat input * O_2 F-Factor * (20.9/(20.9 - %O_2))
Flow:	4757	acf/min	flow (scf/min) * (Temp + 460) / 528 *29.92 / Site Pressure / (100% - %Moisture)

Units:	32 - 34	
Description:	CAT G3608 SITA, 4SLB RICE	

ISO Rating:	2222	hp	Mfg. data at sea level
Elevation:	6020	ft MSL	
Derate:	6.06	%	3% derate per 1000 ft over 400 ft
Site Rating:	2087	hp	ISO Rating * (1-%Derate)
Fuel Consumption:	6935	Btu/hp-hr	Mfg. data
Fuel Consumption:	14.5	MMBtu/hr	Fuel Consumption (Btu/hp-hr) * Derate hp
Fuel Heating Value:	900	Btu/scf	Nominal
Fuel Consumption:	16.1	Mscf/hr	Fuel Consumption (MMBtu/hr) / Fuel Heating Value (Btu/scf)

Criteria Pollutants Uncontrolled Emissions

NO_x	CO	VOC	SO_2[4]	TSP[5]	PM_{10}[5]	$PM_{2.5}$[5]	
1.00	1.90	0.50					EF (g/hp-hr)[1]
4.6	8.7	2.30	0.23	0.29	0.29	0.29	lb/hr[2]
20.2	38.3	10.1	1.0	1.3	1.3	1.3	tons/yr[3]

Criteria Pollutants Controlled Emissions

NO_x	CO	VOC	SO_2[4]	TSP[5]	PM_{10}[5]	$PM_{2.5}$[5]	
1.00	0.19	0.18					EF (g/hp-hr)[6]
4.6	0.87	0.83	0.23	0.29	0.29	0.29	lb/hr (controlled)
20.2	3.8	3.6	1.0	1.3	1.3	1.3	tons/yr (controlled)

[1] Emission factors from manufacturer data
[2] Hourly emission rates calculated as follows:
lb/hr = EF (g/hp-hr) * Engine hp * 1lb/453.592g
Particulate lb/hr = tons/yr * 1yr/8760hr * 2000lb/ton
[3] tons/yr = lb/hr * 8760 hr/yr * 1ton/2000lb
[4] SO_2 emission calculated assuming a maximum sulfur content of 5gr/100scf and full conversion to SO_2.
lb/hr = 5gr/100scf * 1lb/7000gr * 64lb SO2/32lb S * Fuel Consumption (Mscf/hr)
[5] Assumed TSP = PM_{10} = $PM_{2.5}$; annual emission rate from GRI-HAPCalc 3.01
[6] Control for CO and VOC emissions provided by Johnson Mathey catalytic converter

HAP Emissions
Annual emission rates from GRI-HAPCalc; hourly emission calculated assuming 8760hr/yr of operation

Acetaldehyde	Acrolein	Benzene	HCHO	n-Hexane	Methanol	Styrene	Toluene	2,2,4-TMP	Xylenes	Total HAPs	
0.0423	0.0399	0.0240	0.4571	-	0.0919	0.0002	0.0085	-	0.0030	0.6815	lb/hr
0.1854	0.1748	0.105	2.002	-	0.4027	0.0008	0.0371	-	0.0130	2.9849	tons/yr

Stack Parameters

Flow:	14,413	acfm	Mfg. data
Diameter:	1.67	diameter	Measured
Velocity:	109.7	velocity	flow / area
Height:	22	ft	Measured
Temperature:	868	F	Mfg. data

Units:	35 - 37	
Description:	Solar Mars T-15000, NG Turbine	

ISO Rating:	15000	hp	Mfg. data at sea level
Elevation:	6020	ft MSL	
Derate:	4.04	%	2% derate per 1000 ft over 4000 ft
Site Rating:	14394	hp	ISO Rating * (1-%Derate)
Site Rating:	11818	hp	Mfg. data
Fuel Consumption:	7721	Btu/hp-hr	Mfg. data
Fuel Consumption:	91.2	MMBtu/hr	Fuel Consumption (Btu/hp-hr) * Mfg. site hp
Fuel Heating Value:	900	Btu/scf	Nominal
Fuel Consumption:	101.4	Mscf/hr	Fuel Consumption (MMBtu/hr) / Fuel Heating Value (Btu/scf)

Criteria Pollutants Uncontrolled Emissions

NO_x	CO	VOC	SO_2[3]	TSP[4]	PM_{10}[4]	$PM_{2.5}$[4]	
76.2	2.4	0.24	1.4	0.75	0.75	0.75	lb/hr[1]
333.6	10.4	1.0	6.3	3.3	3.3	3.3	tons/yr[2]

[1] lb/hr = tons/yr * 1yr/8760hr * 2000lb/ton

[2] Maximum emission rate (tons/yr) from manufacturer data for NO_x, CO and THC. THC assumed to be 12% VOC, based on AP-42 ratio. Particulate emission rate (tons/yr) from GRI-HAPCalc 3.01

[3] SO_2 emission calculated assuming a maximum sulfur content of 5gr/100scf and full conversion to SO_2. lb/hr = 5gr/100scf * 1lb/7000gr * 64lb SO2/32lb S * Fuel Consumption (Mscf/hr)

[4] Assumed TSP = PM_{10} = $PM_{2.5}$; annual emission rate from GRI-HAPCalc 3.01

HAP Emissions

Annual emission rates from GRI-HAPCalc; hourly emission calculated assuming 8760hr/yr of operation

Acetaldehyde	Acrolein	Benzene	HCHO	n-Hexane	Methanol	Styrene	Toluene	2,2,4-TMP	Xylenes	Total HAPs	
0.4513	0.0068	0.0140	0.4409	0.0392	-	-	0.0107	0.0418	0.0324	1.0828	lb/hr
1.9765	0.0296	0.0614	1.9311	0.1717	-	-	0.0469	0.1830	0.1418	4.7428	tons/yr

Stack Parameters

Mass flow rate:	335,491	lb/hr	Mfg. data
Volumetric flow:	252,397	acf/min	Calculated below
Diameter:	7.5	ft	Minimum
Velocity:	95.2	ft/sec	flow / area
Height:	50	ft	Minimum
Temperature:	907	F	Mfg. data

Volumetric Flow Calculations

Site Altitude:	6020	ft MSL
Standard Pressure:	29.92	in. Hg
Site Pressure:	23.92	in. Hg
MW exhaust gas:	27.6	lb/lb-mol[5]
Gas constant, R:	21.8	in. Hg * cf /lb-mol * deg. R

	1245.8	cf/lb-mol	RT/P (ideal gas)
Specific Volume:	45.1	cf/lb	specific volume / MW
Exhaust Density:	0.022153648	lb/cf	1 / specific volume
Flow Rate:	252397	acf/min	mass flow rate * specific volume * 1hr/60min

Units: 42, 43
Description: Flares

Routine flow, Gas Analysis, 03/02/10

Component	MW	Wet vol/mol%	MW * wet vol %	LHV Btu/scf	Btu/scf * wet vol %	Mass Fraction (wet)	Spec. Volume ft^3/lb	Spec. Volume VOC ft^3/lb
Water	18.02	0.000%	0.0000	0	0.00	0.00%	21.06	
Nitrogen	28.01	1.224%	0.3429	0	0.00	1.99%	13.547	
Argon/Oxygen	31.99	0.290%	0.0928	0	0.00	0.54%	13.5	
CO_2	44.01	0.727%	0.3200	0	0.00	1.86%	8.623	
H_2S	34.08	0.000%	0.0000	586.71	0.00	0.00%	11.136	
Methane	16.04	94.413%	15.1467	909.1	858.31	87.82%	23.65	
Ethane	30.07	1.933%	0.5813	1617.8	31.27	3.37%	12.62	
Propane	44.10	0.793%	0.3497	2315.9	18.37	2.03%	8.606	4.830
I-Butane	58.12	0.145%	0.0843	3001	4.35	0.49%	6.529	0.670
N-Butane	58.12	0.223%	0.1296	3010.5	6.71	0.75%	6.529	1.030
I-Pentane	72.15	0.079%	0.0570	3697.9	2.92	0.33%	5.26	0.294
N-Pentane	72.15	0.048%	0.0346	3706.8	1.78	0.20%	5.26	0.179
Cyclopentane	70.14	0.000%	0.0000	3512.2	0.00	0.00%	5.411	0.000
n-Hexane	86.18	0.000%	0.0000	4403.9	0.00	0.00%	4.404	0.000
other Hexanes	86.18	0.125%	0.1077	4403.49	5.50	0.62%	4.509	0.399
Heptanes	100.21	0.000%	0.0000	5100.3	0.00	0.00%	3.787	0.000
2,2,4-TMP	114.23	0.000%	0.0000	5778.9	0.00	0.00%	3.865	0.000
Benzene	78.11	0.000%	0.0000	3591.0	0.00	0.00%	4.858	0.000
Toluene	92.14	0.000%	0.0000	4273.5	0.00	0.00%	4.119	0.000
Ethylbenzene	106.17	0.000%	0.0000	4970.6	0.00	0.00%	3.574	0.000
Xylenes	106.17	0.000%	0.0000	4957.0	0.00	0.00%	3.574	0.000
C8+	114.23	0.000%	0.0000	5796.1	0.00	0.00%	3.322	0.000
Total		**100%**	**17.25**		**929.22**	**100%**		**7.402**

NMEHC (VOC) *1.41%*

Fuel Data

Flare Pilot	200	scf/hr	Mfg	
	0.2	Mscf/hr		
	900.00	Btu/scf	Min typical natural gas	
	180.0	MBtu/hr	Pilot heat input	Btu/scf * scf/hr / 1000
	0.18	MMBtu/hr		MBtu/hr * MMBtu / 1000MBtu
Flared Gas	18100.00	scf/hr	Flow measurements; 03/02/2010	
	120%	Safety factor		
	39.82	Mscf/hr		
	929.2	Btu/scf	Calculated	
	37.0	MMBtu/hr	heat input	
Total				
	37.2	MMBtu/hr	Pilot + Flared gas	
	350.6	MMscf/yr	Pilot+ Flared gas	

Stack Parameters

	1000	°C	Exhaust temperature	Per NMAQB guidelines
	20	m/sec	Exhaust velocity	Per NMAQB guidelines
	130	ft	Flare height	Design
Pilot				
	16.04	g/mol	Fuel gas molecular weight	Mol. wt. of methane, the dominant species
	12,600	cal/sec	Heat release (q)	MMBtu/hr * 10^6 * 252 cal/Btu ÷ 3600 sec/hr
	10,178		q_n	$q_n = q(1-0.048(MW)^{1/2})$
	0.1009	m	Effective stack diameter (D)	$D = (10^{-6}q_n)^{1/2}$
Pilot and Flared Gas				
	17.23	g/mol	Fuel gas molecular weight	Volume weighted mol. wt. of all components
	2.45E+07	cal/sec	Heat release (q)	MMBtu/hr * 10^6 * 252 cal/Btu ÷ 3600 sec/hr
	1.97E+07		q_n	$q_n = q(1-0.048(MW)^{1/2})$
	4.4329	m	Effective stack diameter (D)	$D = (10^{-6}q_n)^{1/2}$

Emission Rates

Pilot

NO_x	CO	VOC	H_2S	SO_2	Units	
0.1380	0.2755				lb/MMBtu	TNRCC RG-109
			4E-04		lb H_2S/Mscf	Purchased sweet natural gas fuel, 0.25 gr H_2S/100scf
			7.14E-05		lb H_2S/hr	H_2S rate * fuel usage
				7E-03	lb S/Mscf	Purchased sweet natural gas fuel, 5 gr S/100scf
				1E-03	lb SO_2/hr*	SO_2 rate * fuel usage
		0.00%			mol%	Assume no VOC content in purchased fuel (methane)
		23.7			ft^3/lb	Specific volume (methane)
		0.00			lb/hr	vol. Gas * mole fraction / specific volume
100%	100%	100%	100%	100%	%	Safety Factor
0.2760	0.5510				lb/MMBtu	Unit emission rate with Safety Factor
0.050	**0.099**				lb/hr	lb/MMBtu * MMBtu/hr
		0.000	**1.4E-04**	**3.4E-03**	lb/hr	98% combustion H_2S; 100% conversion to SO_2
0.22	**0.43**	**0.000**	**6.3E-04**	**1.5E-02**	tpy	8760 hrs/yr

Flared Gas

NO_x	CO	VOC	H_2S	SO_2	Units	
0.1380	0.2755				lb/MMBtu	TNRCC RG-109
		1.41%	0.00%		mol%	Flare Gas (assume no VOC content in purchased fuel)
		7.4	11.136		ft^3/lb	Specific volume
		76.02	0.000		lb/hr	vol. Gas * mole fraction / specific volume
5.13	**10.24**				lb/hr	lb/MMBtu * MMBtu/hr
		76.02	0.0		lb/hr	Uncontrolled emissions
		332.95	0.0		tpy	Uncontrolled emissions
pilot + flared gas	**5.2**	**10.3**	**1.5**	0.00014	0.0034	lb/hr	98% combustion H_2S and VOC; 100% conversion to SO_2
	22.7	**45.3**	**6.7**	0.00063	0.015	tpy	8760 hrs/yr

HAP Emissions

HAP	Vol %	Vol/Day (scf/hr)	Spec. Vol (scf/lb)	Uncontrolled Emissions (lb/hr)	(tpy)	Controlled (lb/hr)	(tpy)
Hexanes	0.125%	22.6	4.404	5.1	0.9	1.03E-01	1.88E-02
Benzene	0.000%	0.00	3.865	0.00E+00	0.00E+00	0.00E+00	0.00E+00
Toluene	0.000%	0.00	4.119	0.00E+00	0.00E+00	0.00E+00	0.00E+00
Ethylbenzene	0.000%	0.00	3.574	0.00E+00	0.00E+00	0.00E+00	0.00E+00
Xylenes	0.000%	0.00	3.574	0.00E+00	0.00E+00	0.00E+00	0.00E+00
Total						**0.1027**	**0.0188**

Unit: 44
Description: Cryo plant process and emergency flare

Dehydrator Regenerator Overheads and Misc. Plant Feed Gas Composition (Gas analysis 03/02/2010):

Component	MW	Wet vol/mol%	MW * wet vol %	LHV Btu/scf	Btu/scf * wet vol %	Mass Fraction (wet)	Spec. Volume ft^3/lb	Spec. Volume VOC ft^3/lb
Water	18.02	0.00%	0.0000	0	0.00	0.00%	21.06	
Nitrogen	28.01	8.50%	2.3811	0	0.00	8.01%	13.547	
Argon/Oxygen	31.99	2.08%	0.6654	0	0.00	2.24%	13.5	
CO_2	44.01	4.65%	2.0478	0	0.00	6.89%	8.623	
H_2S	34.08	0.00%	0.0000	586.71	0.00	0.00%	11.136	
Methane	16.04	28.79%	4.6194	909.1	261.77	15.54%	23.65	
Ethane	30.07	40.49%	12.1741	1617.8	654.98	40.96%	12.62	
Propane	44.10	10.76%	4.7444	2315.9	249.17	15.96%	8.606	5.979
I-Butane	58.12	1.14%	0.6643	3001	34.30	2.24%	6.529	0.482
N-Butane	58.12	1.87%	1.0863	3010.5	56.27	3.66%	6.529	0.788
I-Pentane	72.15	0.57%	0.4134	3697.9	21.19	1.39%	5.26	0.195
N-Pentane	72.15	0.43%	0.3088	3706.8	15.87	1.04%	5.26	0.145
Cyclopentane	70.14	0.00%	0.0000	3512.2	0.00	0.00%	5.411	0.000
n-Hexane	86.18	0.72%	0.6162	4403.9	31.49	2.07%	4.404	0.203
other Hexanes	86.18	0.00%	0.0000	4403.49	0.00	0.00%	4.509	0.000
Heptanes	100.21	0.00%	0.0000	5100.3	0.00	0.00%	3.787	0.000
2,2,4-TMP	114.23	0.00%	0.0000	5778.9	0.00	0.00%	3.865	0.000
Benzene	78.11	0.00%	0.0000	3591.0	0.00	0.00%	4.858	0.000
Toluene	92.14	0.00%	0.0000	4273.5	0.00	0.00%	4.119	0.000
Ethylbenzene	106.17	0.00%	0.0000	4970.6	0.00	0.00%	3.574	0.000
Xylenes	106.17	0.00%	0.0000	4957.0	0.00	0.00%	3.574	0.000
C8+	114.23	0.00%	0.0000	5796.1	0.00	0.00%	3.322	0.000
Total		100%	29.72		1325.03	100%		7.792
			(mixture mol. wt)		*(mixture heating value)*			

NMEHC (VOC) *15.49%*

Fuel Data

Flare Pilot	200	scf/hr	Mfg	
	0.2	Mscf/hr		
	900.00	Btu/scf	Min typical natural gas	
	180.0	MBtu/hr	Pilot heat input	Btu/scf * dscf/hr / 1000
	0.18	MMBtu/hr		MBtu/hr / 1000
Flared Gas	16200.00	scf/hr	Flow measurements; 03/02/2010	
	80%	Safety factor		
	29.16	Mscf/hr		
	1325.0	Btu/scf	Calculated	
	38.6	MMBtu/hr	heat input	
Total				
	38.8	MMBtu/hr	Pilot + Flared gas	
	257.2	MMscf/yr	Pilot+ Flared gas	

Emission Rates

Pilot

NOx	CO	VOC	H_2S	SO_2	Units	
0.1380	0.2755				lb/MMBtu	TNRCC RG-109 (high Btu; other)
			4E-04		lb H_2S/Mscf	Purchased sweet natural gas fuel, 0.25 gr H_2S/100scf
			7.14E-05		lb H_2S/hr	H_2S rate * fuel usage
				7E-03	lb S/Mscf	Purchased sweet natural gas fuel, 5 gr S/100scf
				1E-03	lb SO_2/hr*	SO_2 rate * fuel usage
		0.00%			mol%	Assume no VOC content in purchased fuel (methane)
		23.7			ft^3/lb	Specific volume (methane)
		0.00			lb/hr	vol. Gas * mole fraction / specific volume
100%	100%	100%	100%	100%	%	Safety Factor
0.2760	0.5510				lb/MMBtu	Unit emission rate with Safety Factor
0.050	**0.099**				lb/hr	lb/MMBtu * MMBtu/hr
		0.000	**1.4E-04**	**0.0034**	lb/hr	98% combustion H_2S; 100% conversion to SO_2
0.22	**0.43**	**0.000**	**6.3E-04**	**0.015**	tpy	8760 hrs/yr

Flared Gas

NOx	CO	VOC	H_2S	SO_2	Units	
0.1380	0.2755				lb/MMBtu	TNRCC RG-109 (high Btu; other)
		15.49%	0.00%		mol%	Flare Gas (assume no VOC content in purchased fuel)
		7.8	11.136		ft^3/lb	Specific volume
		579.59	0.000		lb/hr	vol. Gas * mole fraction / specific volume
5.36	**10.69**				lb/hr	lb/MMBtu * MMBtu/hr
		579.59	0.0		lb/hr	Uncontrolled emissions
		2538.59	0.0		tpy	Uncontrolled emissions
pilot + flared gas **5.407**	**10.79**	**11.59**	**1.43E-04**	**0.0034**	lb/hr	98% combustion H_2S and VOC; 100% conversion to SO_2
23.681	**47.28**	**50.77**	**6.26E-04**	**0.015**	tpy	8760 hrs/yr

HAP Emissions

HAP	Vol %	Vol/Day (scf/hr)	Spec. Vol (scf/lb)	Uncontrolled Emissions (lb/hr)	(tpy)	Controlled * (lb/hr)	(tpy)
Hexanes	0.715%	115.8	4.404	26.3	4.8	5.26E-01	9.60E-02
Benzene	0.000%	0.00	3.865	0.00E+00	0.00E+00	0.00E+00	0.00E+00
Toluene	0.000%	0.00	4.119	0.00E+00	0.00E+00	0.00E+00	0.00E+00
Ethylbenzene	0.000%	0.00	3.574	0.00E+00	0.00E+00	0.00E+00	0.00E+00
Xylenes	0.000%	0.00	3.574	0.00E+00	0.00E+00	0.00E+00	0.00E+00
Total						**0.5260**	**0.0960**

Stack Parameters

Temperature:	1000	˚C	Per NMAQB guidelines
Velocity:	20	m/sec	Per NMAQB guidelines
Height:	130	ft	Design

Pilot

16.04	g/mol	Fuel gas molecular weight	Mol. wt. of methane, the dominant species
12,600	cal/sec	Heat release (q)	MMBtu/hr * 10^6 * 252 cal/Btu ÷ 3600 sec/hr
10,178		q_n	$q_n = q(1-0.048(MW)^{1/2})$
0.1009	m	Effective stack diameter (D)	$D = (10^{-6}q_n)^{1/2}$

Pilot and Flared Gas

29.55	g/mol	Fuel gas molecular weight	Volume weighted mol. wt. of all components
1.80E+07	cal/sec	Heat release (q)	MMBtu/hr * 10^6 * 252 cal/Btu ÷ 3600 sec/hr
1.33E+07		q_n	$q_n = q(1-0.048(MW)^{1/2})$
3.6477	m	Effective stack diameter (D)	$D = (10^{-6}q_n)^{1/2}$

Unit:	46		
Description:	Callidus Thermal Oxidizer		
NG Flow Rate:	9666.7 scf/hr	Mfg. data	
Annual NG Flow Rate:	84.7 MMscf/yr	Assuming 8760hr/yr	0.2320008
Exhaust Flow:	24630 acfm	Mfg. data	
Exhaust Flow:	7197 scfm	Mfg. data	

Criteria Pollutants Uncontrolled Emissions

NO_x	CO	VOC	SO_2	H_2S		
120	50				ppmvd	Maximum concentration
4.5	1.3	0.10			lb/hr	Manufacturer guarantee
			0.10		lb-mol/hr	H_2S inlet mass flow rate[1]
			0.10		lb-mol/hr	SO_2 exhaust flow rate[2]
				10	ppmv	Maximum H_2S in exhaust[1]
				0.0961	lb/scf	H_2S density Perry's
4.5	1.3	0.10	6.4	0.41	lb/hr[3]	
19.7	5.7	0.44	28.0	1.8	tpy	lb/hr * 8760 hrs/yr * ton/2000 lb

[1] Manufacturer data

[2] Assumes 100% destruction of H_2S

[3] lb/hr for SO_2 = SO_2 exhaust flow (lb-mol/hr) * MW SO_2 (64 lb/lb-mol)
lb/hr for H2S = ppmv * exhaust flow (scfm) * 60min/hr * density (0.0961 lb/scf)

Stack Parameters

Exhaust Temperature	1000 °F	Manufacturer data
Exhaust Flow	24630 acfm	Manufacturer data
Stack Diameter	3 ft	
Stack velocity	58 ft/s	Exhaust flow (acfm) * (min/60 s) *(4/(PI*D^2))
Stack Height	30 ft	Manufacturer data

Units:	48		
Description:	Mole sieve regeneration heater		
Design heat release:	7.68	MMBtu/hr	
Efficiency:	125%	Burner size	
Heat Input Rate:	9.6	MMBtu/hr	Design heat release * efficiency
Fuel Heating Value:	900	Btu/scf	Nominal
Fuel Consumption:	10.7	Mscf/hr	Heat Input Rate (MMBtu/hr) / Fuel Heating Value (Btu/scf) * 1000 Mscf/MMscf

Criteria Pollutants Uncontrolled Emissions

NO_x	CO	VOC	SO_2	TSP[5]	PM_{10}[5]	$PM_{2.5}$[5]		
0.131							lb/MMBtu	Manufacturer data
1.2576							lb/hr	lb/MMBtu * MMBtu/hr
100	84	5.5	14.3				EF (lb/MMscf)[1]	
1.067	0.896	0.059	0.152				lb/hr[2]	
50%	100%	50%	0%				Safety factor	
1.9	**1.8**	**0.088**	**0.15**	**0.057**	**0.057**	**0.057**	**lb/hr (w/SF)[3]**	
8.3	**7.8**	**0.39**	**0.67**	**0.25**	**0.25**	**0.25**	**tons/yr[4]**	

[1] Emission factors (except SO2) from AP-42 Tables 1.4-1 and 1.4-2
SO_2 emission calculated assuming a maximum sulfur content of 5gr/100scf and full conversion to SO_2.
lb/MMscf = 5gr/100scf * 1lb/7000gr * 64lb SO2/32lb S * 10^6scf/1MMscf
[2] Hourly emission rates calculated using the following equation:
lb/hr = EF (lb/MMscf) * Fuel Consumption (Mscf/hr) * 1MMscf/1000Mscf
Particulate lb/hr = tons/yr * 1yr/8760hr * 2000lb/ton
[3] lb/hr (w/SF) = lb/hr * (1 + SF)
[4] tons/yr = lb/hr (w/SF) * 8760hr/yr * 1ton/2000lb
[5] Assumed TSP = PM_{10} = $PM_{2.5}$; annual emission rate from GRI-HAPCalc 3.01

HAP Emissions
Annual emission rates from GRI-HAPCalc; hourly emission calculated assuming 8760hr/yr of operation

Acetaldehyde	Acrolein	Benzene	HCHO	n-Hexane	Methanol	Styrene	Toluene	2,2,4-TMP	Xylenes	Total HAPs	
0.0057	-	0.0058	0.0065	0.0108	0.0074	0.0160	0.0078	0.0218	0.0101	0.1107	lb/hr
0.0248	-	0.0252	0.0284	0.0473	0.0324	0.0699	0.0342	0.0956	0.0444	0.4848	tons/yr

Stack Parameters

Temperature:	580	°F	Design
Height:	45.5	ft	Design
Diameter:	2.25	ft	Design
F factor:	10610	wscf/MMBtu	Method 19
Exhaust Flow:	1698	scfm	Heat input * F factor/60
Exhaust Flow:	4176	acfm	$Va = Vs*(P_s/P_a)*(T_a/T_s)$
Velocity:	18	ft/s	Exhaust flow (acfm) * (min/60 s) *(4/(PI*D^2))
Site Elevation:	6020	ft MSL	
Stand. Pressure:	29.92	in Hg	
Site Pressure:	23.95	in Hg	Hess, Introduction to Theoretical Meteorology, eqn. 6.8
Stand. Temperature:	528	R	

Units:	49		
Description:	Solar 60-7000S Turbine with SoLoNOx Retrofit		
Site Rating:	6039	hp	Mfg. data
Fuel Consumption:	7836	Btu/hp-hr	Mfg. data
Fuel Consumption:	47.3	MMBtu/hr	Fuel Consumption (Btu/hp-hr) * Derate hp * MMBtu/10^6Btu
Fuel Heating Value:	900	Btu/scf	Nominal
Fuel Consumption:	52.6	Mscf/hr	Fuel Consumption (MMBtu/hr) / Fuel Heating Value (Btu/scf) * 1000 Mscf/MMscf
Annual Fuel Usage:	460.6	MMscf/yr	Fuel Consumption (Mscf/hr) * 8760 hr/yr * MMscf/1000 Mscf

Criteria Pollutants Uncontrolled Emissions

NO_x	CO	VOC	SO_2	TSP[3]	PM_{10}[3]	$PM_{2.5}$[3]		
7.97	5.78	0.17					EF (lb/hr)	Manufacturer data
8.0	5.8	0.17	0.75	0.39	0.39	0.39	lb/hr[1]	
34.9	25.3	0.74	3.3	1.7	1.7	1.7	tons/yr[2]	

[1] Hourly emission rates calculated as follows:
Particulate lb/hr = tons/yr * 1yr/8760hr * 2000lb/ton
SO_2 emission calculated assuming a maximum sulfur content of 5gr/100scf and full conversion to SO_2.
lb/hr = 5gr/100scf * 1lb/7000gr * 64lb SO2/32lb S * Fuel Consumption (Mscf/hr)
[2] tons/yr = lb/hr * 8760hr/yr * 1ton/2000lb
[3] Assumed TSP = PM_{10} = $PM_{2.5}$; annual emission rate from GRI-HAPCalc 3.01

HAP Emissions
Annual emission rates from GRI-HAPCalc; hourly emission calculated assuming 8760hr/yr of operation

Acetaldehyde	Acrolein	Benzene	HCHO	n-Hexane	Methanol	Styrene	Toluene	2,2,4-TMP	Xylenes	Total HAPs	
0.2306	0.0034	0.0072	0.2253	0.0200	-	-	0.0055	0.0213	0.0166	0.5533	lb/hr
1.0100	0.0151	0.0314	0.9868	0.0877	-	-	0.0239	0.0935	0.0725	2.4236	tons/yr

Stack Parameters

Ambient Temperature	0	°F	
Exhaust Temperature	842	°F	Mfg data
Exhaust Flow Rate	146704	lb/hr	Mfg data
Stack Diameter	5.0	ft	Engineering estimate
Stack height	35.8	ft	Engineering estimate
Exhaust flow	104969	acfm	Calculated below
Exhaust velocity	89.1	ft/s	flow / area

Site Data

Site Elevation	6020	ft MSL	
Standard Pressure	29.92	in Hg	
Pressure at Elevation	23.95	in Hg	Hess, Introduction to Theoretical Meteorology, eqn. 6.8

Volume Calculation

Ambient Temperature	0	°F	
MW of exhaust gas	27.6	lb/lb-mole	See below
R	21.8	in Hg-cf/lb	Ideal gas constant
Specific volume	1184.896	cf/ lb-mol	RT/P
Specific weight	42.931014	cf/lb-mole	Specific volume/MW
Exhaust gas density	0.0232932	lb/cf	1/ Specific weight
Exhaust gas flow rate	104969.2	acfm	Exhaust mass / exhaust gas density / 60min/hr

Molecular Weight

Stoichiometric combustion

$CH_4 + 2O_2 = CO_2 + 2H_2O$

ICAO standard atmosphere = 20.95% O_2, 79.05% N_2

Ratio N_2 to O_2 = 79.05:20.95 = 3.77:1

$CH_4 + 2O_2 + (2*3.77)N_2 = CO_2 + 2H_2O + 7.54\ N_2$

1 mole CO_2 + 2 moles H_2O + 7.54 moles N_2 = 10.54 moles total exhaust gases

Mole fraction CO_2 = 1 / 10.54 = 0.095

Mole fraction H_2O = 2 / 10.54 = 0.190

Mole fraction N_2 = 7.54 / 10.54 = 0.715

MW CO_2 = 44

MW H_2O = 18

MW N_2 = 28

MW exhaust gas = 44*0.095 + 18*0.190 + 28*0.715 = 27.6

Units:	50		
Description:	CAT G3612 TALE, 4SLB RICE		
ISO Rating:	3550	hp	Mfg. data at sea level
Elevation:	6020	ft MSL	
Derate:	6.06	%	3% derate per 1000 ft over 4000 ft
Site Rating:	3335	hp	ISO Rating * (1-%Derate)
Fuel Consumption:	6761	Btu/hp-hr	Mfg. data
Fuel Consumption:	22.5	MMBtu/hr	Fuel Consumption (Btu/hp-hr) * Derate hp
Fuel Heating Value:	900	Btu/scf	Nominal
Fuel Consumption:	25.1	Mscf/hr	Fuel Consumption (MMBtu/hr) / Fuel Heating Value (Btu/scf)
Annual fuel usage:	219.5	MMscf/yr	Fuel Consumption (Mscf/hr) * 8760 hr/yr * (MMscf/1000 Mscf)

Criteria Pollutants Uncontrolled Emissions

NO_x	CO	VOC	SO_2[4]	TSP[5]	PM_{10}[5]	$PM_{2.5}$[5]	
0.7	2.5	0.9					EF (g/hp-hr)[1]
5.1	18.4	6.8	0.36	0.24	0.24	0.24	lb/hr[2]
22.5	80.5	29.9	1.6	1.1	1.1	1.1	tons/yr[3]

Criteria Pollutants Controlled Emissions

NO_x	CO	VOC	SO_2[4]	TSP[5]	PM_{10}[5]	$PM_{2.5}$[5]	
0.7	0.25	0.33					EF (g/hp-hr)[6]
5.1	1.84	2.39	0.36	0.24	0.24	0.24	lb/hr (controlled)
22.5	8.1	10.5	1.6	1.1	1.1	1.1	tons/yr (controlled)

[1] Emission factors from manufacturer data

[2] Hourly emission rates calculated as follows:
lb/hr = EF (g/hp-hr) * Engine site hp * 1lb/453.592g
Particulate lb/hr = tons/yr * 1yr/8760hr * 2000lb/ton

[3] tons/yr = lb/hr * 8760 hr/yr * 1ton/2000lb

[4] SO_2 emission calculated assuming a maximum sulfur content of 5gr/100scf and full conversion to SO_2.
lb/hr = 5gr/100scf * 1lb/7000gr * 64lb SO2/32lb S * Fuel Consumption (Mscf/hr)

[5] Assumed TSP = PM_{10} = $PM_{2.5}$; annual emission rate from GRI-HAPCalc 3.01

[6] Control for CO (90%) and VOC (65%) by catalytic converter

HAP Emissions

Annual emission rates from GRI-HAPCalc; hourly emission calculated assuming 8760hr/yr of operation

Acetaldehyde	Acrolein	Benzene	HCHO	n-Hexane	Methanol	Styrene	Toluene	2,2,4-TMP	Xylenes	Total HAPs	
0.2027	0.1246	0.0107	1.2801	0.0269	0.0606	0.0006	0.0099	0.0061	0.0045	1.7502	lb/hr
0.8877	0.5458	0.0467	5.6067	0.1179	0.2655	0.0025	0.0433	0.0265	0.0195	7.6659	tons/yr

Stack Parameters

Temperature:	858	F	
Diameter:	2	ft	
Height:	22	ft	
Flow:	24273	acfm	Manufacturer data
Velocity:	128.3	ft/s	flow / area

Units:	51a	
Description:	Glycol dehy regenerator heaters (2 stacks)	

Heat Input Rate:	5.22	MMBtu/hr	
Fuel Heating Value:	900	Btu/scf	Nominal
Fuel Consumption:	5.8	Mscf/hr	Heat Input Rate (MBtu/hr) / Fuel Heating Value (Btu/scf)
Annual fuel usage:	50.8	MMscf/yr	Fuel Consumption (Mscf/hr) * 8760 hr/yr * (MMscf/1000 Mscf)

Criteria Pollutants Uncontrolled Emissions

NO_x	CO	VOC	SO_2[4]	TSP[5]	PM_{10}[5]	$PM_{2.5}$[5]	
100	84	5.5	14.3				EF (lb/MMscf)[1]
0.6	0.49	0.032	0.08	0.080	0.080	0.080	lb/hr[2]
2.5	2.1	0.14	0.36	0.35	0.35	0.35	tons/yr[3]

[1] Emission factors (except SO2) from AP-42 Tables 1.4-1 and 1.4-2

[2] Hourly emission rates calculated using the following equation:
lb/hr = EF (lb/MMscf) * Fuel Consumption (Mscf/hr) * 1MMscf/1000Mscf

[3] tons/yr = lb/hr * 8760hr/yr * 1ton/2000lb

[4] SO_2 emission calculated assuming a maximum sulfur content of 5gr/100scf and full conversion to SO_2.
lb/MMscf = 5gr/100scf * 1lb/7000gr * 64lb SO2/32lb S * 10^6scf/1MMscf

[5] Assumed TSP = PM_{10} = $PM_{2.5}$; annual emission rate from GRI-HAPCalc 3.01 with a safety factor

HAP Emissions

Annual emission rates from GRI-HAPCalc; hourly emission calculated assuming 8760hr/yr of operation

Acetaldehyde	Acrolein	Benzene	HCHO	n-Hexane	Methanol	Styrene	Toluene	2,2,4-TMP	Xylenes	Total HAPs	
0.0039	-	0.0039	0.0044	0.0074	0.0050	0.0108	0.0053	0.0148	0.0069	0.0753	lb/hr
0.0169	-	0.0171	0.0193	0.0322	0.0220	0.0475	0.0232	0.0650	0.0302	0.3296	tons/yr

Stack Parameters (2 identical stacks)

Temperature:	200	F	Engineering estimate
Fuel F-Factor:	8710	dscf/MMBtu	Method 19
Oxygen Content:	5	%	Engineering estimate
Moisture Content:	10	%	Engineering estimate
Exhaust Flow:	996.1	scf/min	Heat input * F-Factor * (20.9/(20.9-%O2)) * 1hr/60min
Exhaust Flow:	1107.4	acf/min	flow (scf/min) * (P_s/P_a) * (T_s/T_a) / (100%-%Moisture)
Diameter:	2.0	ft	Measured
Velocity:	5.9	ft/sec	flow / area
Height:	29	ft	Measured

Site Data

Elevation:	6020	ft, MSL
Stand. Pressure:	29.92	in. Hg
Site Pressure:	23.95	in. Hg
Stand. Temperature:	528	R

Unit: 51b
Descripti Uncontrolled Glycol Dehydrator Regenerator Emissions

Uncontrolled Emissions [1]

VOC		H_2S		Methane		CO_2		Total HAP		n-Hexane		Benzene		Toluene		Ethylbenzene		Xylenes	
lb/hr	tpy	lb/hr	tpy	lb/hr	tpy	lb/hr	tpy	lb/hr	tpy	lb/hr	tpy	lb/hr	tpy	lb/hr	tpy	lb/hr	tpy	lb/hr	tpy
11.18	48.96	-	-	1.04	4.57	-	-	2.71	11.87	0.19	4.38	1.61	4.38	0.90	3.92	0.0063	0.028	0.0071	0.031

Controlled Emissions

VOC		H_2S		Methane		CO_2		Total HAP		n-Hexane		Benzene		Toluene		Ethylbenzene		Xylenes	
lb/hr	tpy	lb/hr	tpy	lb/hr	tpy	lb/hr	tpy	lb/hr	tpy	lb/hr	tpy	lb/hr	tpy	lb/hr	tpy	lb/hr	tpy	lb/hr	tpy
Emissions are controlled by a process flare and are represented under unit 44 using a gas analysis of the facility gas sent to the flare.																			

[1] Uncontrolled emissions are calculated using GRI-GLYCalc Version 4.0 and consist of the controlled regenerator emissions stream. Flash tank emissions are recycled and reocmpressed; there are not emissions associated with the flash tank.

Unit: F-001
Description: Field gas fugitives

Representative Gas Analysis

Component	Mole Fraction[1]	MW	Wt./Mole	Wt. Fract.
Methane	0.849	16.0	13.58	0.69
Ethane	0.077	30.1	2.32	0.12
Propane	0.034	44.1	1.50	0.08
Butanes	0.014	58.1	0.81	0.04
Pentanes	0.005	72.2	0.36	0.02
Hexanes+	0.004	86.2	0.34	0.02
Hydrogen Sulfide	0	34.1	0.00	0.00
Other (non-HC)	0.017	43.9	0.75	0.04
Total	**1.00**		**19.67**	**1.00**

TOC:	1.00
Total NMEHC (VOC):	0.15
VOC/TOC:	**0.15**

Emission Calculations

Component	Count	EF (kg THC/ hr/source)[2]	TOC Emissions (lb/hr)[3]	TOC Emissions (tons/yr)[4]
Valves	1498	4.50E-03	14.86	65.09
Flanges/Connections	4890	3.90E-04	4.20	18.42
Relief Valve	139	8.80E-03	2.70	11.81
Open Ended Lines	300	2.00E-03	1.32	5.79
Pump Seals	0	2.40E-03	0.00	0.00
Compressor Seals	20	8.80E-03	0.39	1.70
		THC Emissions:	**23.47**	**102.81**
		VOC Emissions:	3.60	15.78

[1] Gas composition obtained from inlet gas analysis on cryo plant P&ID
[2] Emission factors from *1995 Protocol for Equipment Leak Emission Estimates* (EPA-453/R-95-017) Table 2-4
[3] lb/hr = kg/hr/source * Count * 2.20462lb/kg
[4] tons/yr = lb/hr * 8760hr/yr * 1ton/2000lb

HAP Emission Calculations

HAP	Wt. %[5]	lb HAP/lb TOC	HAP Emissions (lb/hr)[6]	HAP Emissions (tpy)[7]
Hexane	1.68	0.02	0.39	1.72
Benzene	0.023	0.00023	0.0054	0.024
Toluene	0.039	0.00039	0.0092	0.040
Ethylbenzene	0.002	0.00002	0.00047	0.0021
Xylenes	0.01	0.00010	0.0023	0.010
Total HAP Emissions:			**0.41**	**1.80**

[5] Hexane content from cryo plant P&ID analysis of hexane+ minus BTEX:
C6+ = 1.75-0.023-0.039-0.002-0.010 = 1.676
BTEX content of field gas from Table 4-6 of GRI-HAPCalc Manual for NG.
Speciation based on results of API-GRI bag study.
[6] lb/hr = wt% * THC emission rate (lb/hr) / 100
[7] tons/yr = wt% * THC emission rate (tons/yr) / 100

Unit: F-002
Description: Fuel gas fugitives

Representative Gas Analysis

Component	Mole Fraction[1]	MW	Wt./Mole	Wt. Fract.
Methane	0.984	16.0	15.74	0.96
Ethane	0.004	30.1	0.12	0.01
Propane	0	44.1	0.00	0.00
Butanes	0	58.1	0.00	0.00
Pentanes	0	72.2	0.00	0.00
Hexanes+	0	86.2	0.00	0.00
Hydrogen Sulfide	0	34.1	0.00	0.00
Other (non-HC)	0.012	43.9	0.53	0.03
Total	**1.00**		**16.39**	**1.00**

TOC:	1.00
Total NMEHC (VOC):	0.01
VOC/TOC:	**0.01**

Emission Calculations

Component	Count	EF (kg THC/ hr/source)[2]	TOC Emissions (lb/hr)[3]	TOC Emissions (tons/yr)[4]
Valves	803	4.50E-03	8.0	34.9
Flanges/Connections	2589	3.90E-04	2.2	9.7
Relief Valve	67	8.80E-03	1.3	5.7
Open Ended Lines	161	2.00E-03	0.7	3.1
Pump Seals	0	2.40E-03	0.0	0.0
Compressor Seals	12	8.80E-03	0.23	1.0
		THC Emissions:	**12.43**	**54.47**
		VOC Emissions:	0.091	0.40

[1] Gas composition obtained from fuel gas analysis on cryo plant P&ID
[2] Emission factors from *1995 Protocol for Equipment Leak Emission Estimates* (EPA-453/R-95-017) Table 2-4
[3] lb/hr = kg/hr/source * Count * 2.20462lb/kg
[4] tons/yr = lb/hr * 8760hr/yr * 1ton/2000lb

Note: Fuel gas is methane with a small fraction of ethane. Therefore, there are no HAP fugitive emissions associated with the components in fuel gas service.

Unit: F-003
Description: Acid gas fugitives

Representative Gas Analysis

Component	Mole Fraction[1]	MW	Wt./Mole	Wt. Fract.
Methane	9.40E-05	16.0	0.0015	0.000034
Ethane	0.002	30.1	0.060	0.0014
Propane	1.70E-04	44.1	0.0075	0.00017
Butanes	0	58.1	0.0000	0.00000
Pentanes	0	72.2	0.0000	0.00000
Hexanes+	0	86.2	0.0000	0.00000
Hydrogen Sulfide	1.90E-04	34.1	0.0065	0.00015
Other (non-HC)	0.998	43.9	43.81	1.00
Total	**1.00**		**43.89**	**1.00**

TOC:	0.0016
Total NMEHC (VOC):	0.00017
VOC/TOC:	**0.11**

Emission Calculations

Component	Count	EF (kg THC/ hr/source)[2]	TOC Emissions (lb/hr)[3]	TOC Emissions (tons/yr)[4]
Valves	33	4.50E-03	0.3	1.4
Flanges/Connections	102	3.90E-04	0.1	0.4
Relief Valve	2	8.80E-03	0.0	0.2
Open Ended Lines	7	2.00E-03	0.0	0.1
Pump Seals	0	2.40E-03	0.0	0.0
Compressor Seals	0	8.80E-03	0.00	0.0
		THC Emissions:	**0.48**	**2.12**
		VOC Emissions:	0.053	0.23

[1] Gas composition obtained from acid gas analysis on cryo plant P&ID
[2] Emission factors from *1995 Protocol for Equipment Leak Emission Estimates* (EPA-453/R-95-017) Table 2-4
[3] lb/hr = kg/hr/source * Count * 2.20462lb/kg
[4] tons/yr = lb/hr * 8760hr/yr * 1ton/2000lb

Note: Acid gas is primarily carbon dioxide with a small fraction of light hydrocarbons and hydrogen sulfide. Therefore, there are no HAP fugitive emissions associated with the components in acid gas service.

Unit: F-004
Description: Deethanizer overhead fugitives

Representative Gas Analysis

Component	Mole Fraction[1]	MW	Wt./Mole	Wt. Fract.
Methane	0.015	16.0	0.24	0.01
Ethane	0.7209	30.1	21.70	0.64
Propane	0.1551	44.1	6.84	0.20
Butanes	0.027	58.1	1.57	0.05
Pentanes	0.004	72.2	0.29	0.01
Hexanes+	0.001	86.2	0.09	0.00
Hydrogen Sulfide	0	34.1	0.00	0.00
Other (non-HC)	0.074	43.9	3.25	0.10
Total	**1.00**		**33.97**	**1.00**

TOC:	1.00
Total NMEHC (VOC):	0.26
VOC/TOC:	**0.26**

Emission Calculations

Component	Count	EF (kg THC/ hr/source)[2]	TOC Emissions (lb/hr)[3]	TOC Emissions (tons/yr)[4]
Valves	92	4.50E-03	0.9	4.0
Flanges/Connections	294	3.90E-04	0.3	1.1
Relief Valve	11	8.80E-03	0.2	0.9
Open Ended Lines	18	2.00E-03	0.1	0.3
Pump Seals	0	2.40E-03	0.0	0.0
Compressor Seals	3	8.80E-03	0.06	0.3
		THC Emissions:	**1.52**	**6.64**
		VOC Emissions:	0.39	1.72

[1] Gas composition from deethanizer gas analysis on cryo plant P&ID
[2] Emission factors from *1995 Protocol for Equipment Leak Emission Estimates* (EPA-453/R-95-017) Table 2-4
[3] lb/hr = kg/hr/source * Count * 2.20462lb/kg
[4] tons/yr = lb/hr * 8760hr/yr * 1ton/2000lb

HAP Emission Calculations

HAP	Wt. %[5]	HAP Emissions (lb/hr)[6]	HAP Emissions (tpy)[7]
Hexane	0.18	0.0027	0.012
Benzene	0.023	3.49E-04	0.0015
Toluene	0.039	5.91E-04	0.0026
Ethylbenzene	0.002	3.03E-05	1.33E-04
Xylenes	0.01	1.52E-04	6.64E-04
Total HAP Emissions:		**0.0038**	**0.017**

[5] Hexane content estimated from cryo plant P&ID analysis of hexane+ minus BTEX:
C6+ = 0.25-0.023-0.039-0.002-0.010 = 0.176
BTEX content of deethanizer overhead gas from Table 4-6 of GRI-HAPCalc Manual for NG.
Speciation based on results of API-GRI bag study.
[6] lb/hr = wt% * THC emission rate (lb/hr) / 100
[7] tons/yr = wt% * THC emission rate (tons/yr) / 100

Unit: F-005
Description: Condensate fugitives

Representative Gas Analysis

Component	Mole Fraction[1]	MW	Wt./Mole	Wt. Fract.
Methane	-	16.0	-	0.00
Ethane	-	30.1	-	0.00
Propane	-	44.1	-	0.00
Butanes	-	58.1	-	0.00038
Pentanes	-	72.2	-	0.041
Hexanes+	-	86.2	-	0.93
Hydrogen Sulfide	-	34.1	-	0.00
Other (non-HC)	-	43.9	-	0.03
Total	**0.00**		**0.00**	**1.00**

TOC:	0.97
Total NMEHC (VOC):	0.97
VOC/TOC:	**1.00**

Emission Calculations

Component	Count	EF (kg THC/ hr/source)[2]	TOC Emissions (lb/hr)[3]	TOC Emissions (tons/yr)[4]
Valves	132	2.50E-03	0.7	3.2
Flanges/Connections	396	2.10E-04	0.2	0.8
Relief Valve	0	7.50E-03	0.0	0.0
Open Ended Lines	26	1.40E-03	0.1	0.4
Pump Seals	6	1.30E-02	0.2	0.8
Compressor Seals	0	7.50E-03	0.00	0.0
		THC Emissions:	**1.16**	**5.09**
		VOC Emissions:	1.16	5.09
		Requested VOC Emissions[5]:	**3.61**	**15.80**

[1] Condensate composition from Chaco/Lindrith drip analysis, 2/16/95
[2] Emission factors from *1995 Protocol for Equipment Leak Emission Estimates* (EPA-453/R-95-017) Table 2-4
[3] lb/hr = kg/hr/source * Count * 2.20462lb/kg
[4] tons/yr = lb/hr * 8760hr/yr * 1ton/2000lb
[5] As requested in NSR Permit 1555-M5

HAP Emission Calculations

HAP	Wt. %[6]	HAP Emissions (lb/hr)[7]	HAP Emissions (tpy)[8]
Hexane	0.85	0.010	0.043
Benzene	0.023	0.00027	0.0012
Toluene	0.039	0.00045	0.0020
Ethylbenzene	0.002	0.000023	0.00010
Xylenes	0.01	0.00012	0.00051
Total HAP Emissions:		**0.011**	**0.047**

[6] Hexane content estimated from cryo plant P&ID analysis of hexane+ minus BTEX:
C6+ = 0.926-0.023-0.039-0.002-0.010 = 0.852
BTEX content of condensate from Table 4-6 of GRI-HAPCalc Manual for NG.
Speciation based on results of API-GRI bag study.
[7] lb/hr = wt% * THC emission rate (lb/hr) / 100
[8] tons/yr = wt% * THC emission rate (tons/yr) / 100

Unit: F-006
Description: NGL fugitives

Representative Gas Analysis

Component	Mole Fraction[1]	MW	Wt./Mole	Wt. Fract.
Methane	0	16.0	0.00	0.00
Ethane	0.009	30.1	0.27	0.01
Propane	0.454	44.1	20.02	0.37
Butanes	0.224	58.1	13.01	0.24
Pentanes	0.116	72.2	8.38	0.16
Hexanes+	0.084	86.2	7.24	0.13
Hydrogen Sulfide	0	34.1	0.00	0.00
Other (non-HC)	0.113	43.9	4.96	0.09
Total	**1.00**		**53.9**	**1.00**
TOC:	1.00			
Total NMEHC (VOC):	0.90			
VOC/TOC:	**0.90**			

Emission Calculations

Component	Count	EF (kg THC/ hr/source)[2]	TOC Emissions (lb/hr)[3]	TOC Emissions (tons/yr)[4]
Valves	934	2.50E-03	5.1	22.5
Flanges/Connections	3165	2.10E-04	1.5	6.4
Relief Valve	144	7.50E-03	2.4	10.4
Open Ended Lines	187	1.40E-03	0.6	2.5
Pump Seals	20	1.30E-02	0.6	2.5
Compressor Seals	0	7.50E-03	0.00	0.0
		THC Emissions:	**10.14**	**44.43**
		VOC Emissions:	9.16	40.12

[1] Gas composition obtained from deethanized NGL gas analysis on cryo plant P&ID
[2] Emission factors from *1995 Protocol for Equipment Leak Emission Estimates* (EPA-453/R-95-017) Table 2-4
[3] lb/hr = kg/hr/source * Count * 2.20462lb/kg
[4] tons/yr = lb/hr * 8760hr/yr * 1ton/2000lb

HAP Emission Calculations

HAP	Wt. %[5]	HAP Emissions (lb/hr)[6]	HAP Emissions (tpy)[7]
Hexane	13.36	1.35	5.93
Benzene	0.023	0.0023	0.010
Toluene	0.039	0.0040	0.017
Ethylbenzene	0.002	0.00020	0.0009
Xylenes	0.01	0.0010	0.004
Total HAP Emissions:		**1.4**	**6.0**

[5] Hexane content estimated from cryo plant P&ID analysis of hexane+ minus BTEX:
C6+ = 13.43-0.023-0.039-0.002-0.010 = 13.356
BTEX content of NGL from Table 4-6 of GRI-HAPCalc Manual for NG.
Speciation based on results of API-GRI bag study.
[6] lb/hr = wt% * THC emission rate (lb/hr) / 100
[7] tons/yr = wt% * THC emission rate (tons/yr) / 100

Unit: F-008
Description: Refrigerant fugitives

Representative Gas Analysis

Component	Mole Fraction[1]	MW	Wt./Mole	Wt. Fract.
Methane	0	16.0	0.00	0.00
Ethane	0	30.1	0.00	0.00
Propane	1	44.1	44.10	1.00
Butanes	0	58.1	0.00	0.00
Pentanes	0	72.2	0.00	0.00
Hexanes+	0	86.2	0.00	0.00
Hydrogen Sulfide	0	34.1	0.00	0.00
Other (non-HC)	0	43.9	0.00	0.00
Total	**1.00**		**44.10**	**1.00**

TOC:	1.00
Total NMEHC (VOC):	1.00
VOC/TOC:	**1.00**

Emission Calculations

Component	Count	EF (kg THC/ hr/source)[2]	TOC Emissions (lb/hr)[3]	TOC Emissions (tons/yr)[4]
Valves	254	4.50E-03	2.5	11.0
Flanges/Connections	762	3.90E-04	0.7	2.9
Relief Valve	29	8.80E-03	0.6	2.5
Open Ended Lines	51	2.00E-03	0.2	1.0
Pump Seals	0	2.40E-03	0.0	0.0
Compressor Seals	4	8.80E-03	0.08	0.3
		THC Emissions:	**4.04**	**17.70**
		VOC Emissions:	4.04	17.70

[1] Refrigerant gas is 100% propane. Propane is not a HAP.
Therefore, there are not HAP fugitive emissions associated with components in refrigerant service.

[2] Emission factors from *1995 Protocol for Equipment Leak Emission Estimates* (EPA-453/R-95-017) Table 2-4

[3] lb/hr = kg/hr/source * Count * 2.20462lb/kg

[4] tons/yr = lb/hr * 8760hr/yr * 1ton/2000lb

Unit: F-009
Description: Tank fugitives

Representative Gas Analysis

Component	Mole Fraction[1]	MW	Wt./Mole	Wt. Fract.
Methane	0.849	16.0	13.58	0.69
Ethane	0.077	30.1	2.32	0.12
Propane	0.034	44.1	1.50	0.08
Butanes	0.014	58.1	0.81	0.04
Pentanes	0.005	72.2	0.36	0.02
Hexanes+	0.004	86.2	0.34	0.02
Hydrogen Sulfide	0	34.1	0.00	0.00
Other (non-HC)	0.017	43.9	0.75	0.04
Total	**1.00**		**19.67**	**1.00**
TOC:	1.00			
Total NMEHC (VOC):	0.15			
VOC/TOC:	**0.15**			

Emission Calculations

Component	Count	EF (kg THC/ hr/source)[2]	TOC Emissions (lb/hr)[3]	TOC Emissions (tons/yr)[4]
Valves	14	2.50E-03	0.077	0.34
Flanges/Connections	50	2.10E-04	0.023	0.10
Relief Valve	0	7.50E-03	0.0	0.0
Open Ended Lines	0	1.40E-03	0.0	0.0
Pump Seals	0	1.30E-02	0.0	0.0
Compressor Seals	0	7.50E-03	0.00	0.0
		THC Emissions:	**0.10**	**0.44**
		VOC Emissions:	0.015	0.067

[1] Gas composition obtained from inlet gas analysis on cryo plant P&ID

[2] Emission factors from *1995 Protocol for Equipment Leak Emission Estimates* (EPA-453/R-95-017) Table 2-4

[3] lb/hr = kg/hr/source * Count * 2.20462lb/kg

[4] tons/yr = lb/hr * 8760hr/yr * 1ton/2000lb

Note: Only non-exempt tanks are included in tank fugitive emission calculations.

HAP Emission Calculations

HAP	Wt. %[5]	HAP Emissions (lb/hr)[6]	HAP Emissions (tpy)[7]
Hexane	0.30	0.00030	0.0013
Benzene	0.027	0.000027	0.00012
Toluene	0.075	0.000075	0.00033
Ethylbenzene	0.017	0.000017	0.000075
Xylenes	0.036	0.000036	0.00016
Total HAP Emissions:		**0.00046**	**0.0020**

[5] BTEX fractional compositions from Table 21, GRI-HAPCalc 3.01, light liquid service factors. Hexane concentration in gas from Table 4-6 of an earlier version of HAPCalc.

[6] lb/hr = wt% * THC emission rate (lb/hr) / 100

[7] tons/yr = wt% * THC emission rate (tons/yr) / 100

Unit: CT-B, CT-C
Description: Facility cooling towers

	Cooling Water Recirculation Rate (gpm)[1]	Drift Rate Fraction of Circulating Flow %[2]	Total Drift Mass lb/min[3]	Drift Mass Escape from Facility Boundary %[4]	Drift Mass Leaving Site lb/min[5]	Circulating Water Total Dissolved Solids (ppm_w)[6]
B Cooling Tower	28,500	0.02%	48	32.20%	15.3	9,000
C Cooling Tower	9,000	0.02%	15	32.20%	4.8	9,000

	Uncontrolled Particulate Emissions (lb/hr)[7]	Uncontrolled Particulate Emissions (tpy)[7]	Uncontrolled TSP Emissions (lb/hr)[8]	Uncontrolled TSP Emissions (tpy)[8]	Uncontrolled PM_{10} Emissions (lb/hr)[8]	Uncontrolled PM_{10} Emissions (tpy)[8]	Uncontrolled $PM_{2.5}$ Emissions (lb/hr)[8]	Uncontrolled $PM_{2.5}$ Emissions (tpy)[8]
B Cooling Tower	8.27	36.20	7.55	33.09	0.80	3.50	0.0091	0.04
C Cooling Tower	2.61	11.43	2.39	10.45	0.25	1.10	0.0029	0.01

[1] Cooling Tower Water Recirculation rate based on maximum pump capacity.
[2] Drift Rate from AP-42 13.4-1, induced draft cooling towers.
[3] Total Drift Mass = Recirculation rate * Drift Rate Fraction * Drift Density (8.34 lb/gal)
[4] Facility boundary located 515 ft and 720 ft from the Cooling Towers B and C, respectively; 67.8% of drift mass retained on site (Figure 8, "Effects of Pathogenic and Toxic Materials Transported Via Cooling Device Drift, Volume 1. Technical Report," EPA)
[5] Drift mass leaving site = Total Drift Mass * % Drift Mass escape from facility boundary
[6] TDS is assumed to be 9,000 ppm_w as a conservative measure.
[7] Total particulate emission calculated using procedure described in Section 13.4 of AP-42 (01/95), Wet Cooling Towers.
PM = Water Circulation Rate (see Note 1) * Drift Rate (see Note 2) * Percent drift mass escape (see Note 4) * TDS (see Note 6)
Particulate Hourly Emissions:

$$\frac{28{,}500\ \text{gal}}{\text{min}} \cdot \frac{60\ \text{min}}{\text{hr}} \cdot \frac{0.0002\ \text{gal drift}}{\text{gal recirculation}} \cdot 32.20\% \cdot \frac{8.34\ \text{lb drift}}{\text{gal drift}} \cdot \frac{9000\ \text{lb PM}}{10^6\ \text{lb drift}} = \frac{8.27\ \text{lb}}{\text{hr}}$$

Particulate annual emissions = Hourly emissions (lb/hr) * 8760 (hrs/yr) / 2000 (lb/ton)
[8] Particle size distribution based on the following distribution (from Frisbie Table)

Particle Distribution	
Particle	Mass Fraction of Total Particulates
TSP (PM 30)	0.91
PM10	0.10
PM2.5	0.001

Unit: BT-1 to BT-4
Description: 400-bbl ballard tanks

Produced Water	**Separator**	**Condensor**		
flow rate, bpy	161229	213466		
safety factor	20%	20%	bpy	gpy
Calculated flowrate, bpy	193474.8	256159.2	449634	18,884,628

Compound	**Liquid Concentration, ($g/m^3 \equiv mg/l$)** Separator g/m3	Condensor g/m3	Total g/m3	Total mole/m3	**Henry's Constant at T_{avg}** atm-m3/mol	**Component partial pressure** psia
BENZENE	36.00	480.00	288.95	3.6991	3.48E-03	0.1894
TOLUENE	47.00	330.00	208.23	2.2599	3.80E-03	0.1263
ETHYLBENZENE	1.50	6.10	4.12	0.0388	4.50E-03	0.0026
XYLENE	14.00	70.00	45.90	0.4324	4.23E-03	0.0269
2 BUTANONE	0.00	13.00	7.41	0.1027	2.48E-05	0.0000
PROPANONE	18.00	74.00	49.90	0.8604	2.42E-05	0.0003
1,2,4 -TRIMETHYLBENZENE	0.00	1.50	0.85	0.0071	3.73E-03	0.0004
1,3,5 -TRIMETHYLBENZENE	0.00	0.74	0.42	0.0035	3.57E-03	0.0002
CUMENE	0.00	0.35	0.20	0.0017	8.93E-03	0.0002
NAPHTHALENE	0.16	0.05	0.10	0.0008	7.85E-04	0.0000
2 METHYLNAPHTHALENE	0.13	0.02	0.07	0.0005	4.50E-04	0.0000
PYRIDINE	0.36	0.37	0.37	0.0046	5.54E-06	0.0000
PHENOL	0.19	0.93	0.61	0.0065	3.54E-07	0.0000
HYDROXYMETHYLBENZENE	0.00	0.10	0.06	0.0005	1.67E-07	0.0000
2,4 DIMETHYLPHENOL	0.00	0.03	0.02	0.0001	4.37E-07	0.0000
3,4-DIMETHYLPHENOL	0.23	0.19	0.21	0.0017	4.60E-26	0.0000
WATER	999882.43	999022.62	999392.59	55460.1882	n/a	0.2439

Note 1 Source: R.Sander: Henry's Law Constants at *http://www.npch-mainz.npg.de/~sander/res/henry.html*
Note 2 Water 9 compound properties

Avg. Liquid Surface Temp, ºF	58.5362	T_{avg} ; TANKS 4.09d Site Meteorological Data
Vapor Pressure at T_{avg}	0.59016	psia, calculated from Henry's Law for hydrocarbons and Raoult's Law for water
Vapor Density at T_{avg}	0.00613	$lb/ft^{3;}$ ideal gas law at Tavg.

TANKS New Compound Inputs							
Liquid Density at 60ºF	8.3498	lb/gal					
Liquid Molecular Weight	18.0708	g/mole					
Vapor Molecular Weight	57.7293	g/mole					
TANKS Vapor Pressure	**40ºF**	**50ºF**	**60ºF**	**70ºF**	**80ºF**	**90ºF**	**100ºF**
Option 1 Inputs, psia	**0.32425**	**0.44983**	**0.61693**	**0.83681**	**1.12311**	**1.49215**	**1.96323**

	Emissions ppy	tpy	**Annual Mass Flow, ppy**	**Fraction Lost to Emissions**
Vapor Emissions (incl. H_2O)	5015.12	2.508	157,683,213	0.0032%
BENZENE	2178.297	1.089	40,262.19	5.4103%
TOLUENE	1712.956	0.856	28,601.16	5.9891%
ETHYLBENZENE	40.087	0.020	566.38	7.0777%
XYLENE	419.668	0.210	6,303.38	6.6578%
2 BUTANONE	0.397	0.000	957.70	0.0414%
PROPANONE	2.615	0.001	6,216.96	0.0421%
1,2,4 -TRIMETHYLBENZENE	6.902	0.003	118.05	5.8467%
1,3,5 -TRIMETHYLBENZENE	3.251	0.002	67.81	4.7947%
CUMENE	3.850	0.002	27.18	14.1658%
NAPHTHALENE	0.165	0.000	17.50	0.9449%
2 METHYLNAPHTHALENE	0.063	0.000	10.26	0.6169%
PYRIDINE	0.004	0.000	56.52	0.0078%
PHENOL	0.000	0.000	103.19	0.0005%
HYDROXYMETHYLBENZENE	0.000	0.000	9.38	0.0002%
2,4 DIMETHYLPHENOL	0.000	0.000	2.99	0.0006%
3,4-DIMETHYLPHENOL	0.000	0.000	33.98	0.0000%
Water	646.863	0.323	157,599,859	0.0004%
THC Emissions:	**5015.12**	**2.51**		

SSM Emissions Summary

Unit	NO_x		CO		VOC		SO_2		H_2S	
	lb/hr	tpy	lb/hr	tpy	lb/hr	tpy	lb/hr	tpy	lb/hr	tpy
42/43	22.43	2.70	44.78	5.39	6.51	0.78	1.56E-04	6.85E-04	1.43E-07	6.26E-07
44	54.88	8.24	109.56	1.35	10.87	1.35	10.93	1.35	0.10	0.013
17	-	-	-	-	46.04	0.28	-	-	-	-
18	-	-	-	-	68.35	0.41	-	-	-	-
Scrubbers	-	-	-	-	50.60	0.03	-	-	-	-
Totals	**77.31**	**10.94**	**154.34**	**6.74**	**182.36**	**2.84**	**10.93**	**1.36**	**0.10**	**0.013**

	Flare 42	Flare 44	Atmosphere	
Maximum Vent Rate	136,513	674,334	42852	scf/hr
Anticipated Vent Rate	140,020	380,270	42852	scf/hr
Anticipated / Max Rate * 100%	103%	56%	100%	
NSPS Vmax	Pass	Pass	N/A	
Anticipated SSM Hours	240	300	32	hrs/yr
Thermal Oxidizer Downtime	N/A	248	N/A	hrs/yr
Total Annual Flowrate	33.60	252.44	0.21	MMscfy

Event Information

Emission Unit Description	ID or Tag	Vent Std Volume, scf	Duration, hr	SSM Events per year	Anticipated SSM hrs. per year	Vent rate, scf/hr	Flare No.	Gas stream
Bisti 8 Unit	50	1870	1	20	20	1870	42	field
A-unit compressor	8	5932	1	20	20	5932	42	field
A-unit compressor	11	5932	1	20	20	5932	42	field
B-unit Compressor	12	23100	1	20	20	23100	42	field
B-unit Compressor	13	23100	1	20	20	23100	42	field
B-unit Compressor	14	23100	1	20	20	23100	42	field
Electric Compressor	EC	6176	1	20	20	6176	42	field
Inlet Filter Separator	FT-8101	14369	1	20	20	14369	42	field
Porous Media Filter	FT-8102	10882	1	20	20	10882	42	field
Dust Filter	FT-8103	5660	1	20	20	5660	42	field
Porous Media Filter	FT-8108	10733	1	20	20	10733	42	field
Dust Filter	FT-8109	5660	1	20	20	5660	42	field

Emission Unit Description	ID or Tag	Vent Std Volume, scf	Duration, hr	SSM Events per year	Anticipated SSM hrs. per year	Vent rate, scf/hr	Flare No.	Gas stream
Cryo Refrigerant Recompressors	32	572	1	12	12	572	44	refrigerant
Cryo Refrigerant Recompressors	33	572	1	12	12	572	44	refrigerant
Cryo Refrigerant Recompressors	34	572	1	12	12	572	44	refrigerant
Mars Residue Gas Turbine	35	13108	1	12	12	13108	44	residue
Mars Residue Gas Turbine	36	13108	1	12	12	13108	44	residue
Mars Residue Gas Turbine	37	13108	1	12	12	13108	44	residue
Transwestern Compressor	49	44622	1	12	12	44622	42	residue
Mole Sieve Dehydrator	V-8101	54190	1	12	12	54190	44	field
Mole Sieve Dehydrator	V-8102	54190	1	12	12	54190	44	field
Mole Sieve Dehydrator	V-8103	54190	1	12	12	54190	44	field
High Pressure Cold Separator	V-8105	101245	2	12	24	50623	44	field
Demethanizer	V-8107	99872	2	12	24	49936	44	residue
Product Surge Tank	V-8108	101491	2	12	24	50746	44	product
Deethanizer	V-8109	18977	1	12	12	18977	44	product
Hot Oil Surge Tank	V-8114	1156	1	12	12	1156	44	product
Fuel Gas Scrubber	V-8117	2698	1	12	12	2698	44	residue
Molecular Sieve Dehydrator	V-8134	54190	1	12	12	54190	44	residue
High Pressure Cold Separator	V-8135	49575	1	12	12	49575	44	residue
Demethanizer	V-8136	54072	1	12	12	54072	44	residue
Product Surge Tank	V-8137	45357	1	12	12	45357	44	product
Molecular Sieve Dehydrator	V-8145	97542	2	12	24	48771	44	residue

Emission Unit Description	ID or Tag	Vent Std Volume, scf	Duration, hr	SSM Events per year	Anticipated SSM hrs. per year	Vent rate, scf/hr	Vent	Gas stream	VOC, pph	VOC, tpy
C1 Compressor	17	6155	1	12	12	6155	Atmos.	field	46.04	0.28
C2 Compressor	18	9138	1	12	12	9138	Atmos.	field	68.35	0.41
Regeneration Gas Scrubber	V-8104	6765	1	1	4	6765	Atmos.	field	50.60	0.03
Dry Gas Bypass Gas Scrubber	V-8147	20794	1	1	4	20794	Atmos.	residue	0.00	0.00

Emission Unit: 44
Source Description: Air-assisted flare during scheduled shutdowns of the Thermal oxidizer (Unit 46)

Dehydrator Regenerator Overheads and Misc. Plant Feed Gas Composition (Gas analysis 03/02/2010):

Component	MW	Wet vol/mol%	MW * wet vol %	LHV Btu/scf	Btu/scf * wet vol %	Mass Fraction (wet)	Spec. Volume ft^3/lb	Spec. Volume VOC ft^3/lb
Water	18.02	0.00%	0.0000	0	0.00	0.00%	21.06	
Nitrogen	28.01	8.50%	2.3811	0	0.00	8.01%	13.547	
Argon/Oxygen	31.99	2.08%	0.6654	0	0.00	2.24%	13.5	
CO_2	44.01	4.65%	2.0478	0	0.00	6.89%	8.623	
H_2S	34.08	0.00%	0.0000	586.71	0.00	0.00%	11.136	
Methane	16.04	28.79%	4.6194	909.1	261.77	15.54%	23.65	
Ethane	30.07	40.49%	12.1741	1617.8	654.98	40.96%	12.62	
Propane	44.10	10.76%	4.7444	2315.9	249.17	15.96%	8.606	5.979
I-Butane	58.12	1.14%	0.6643	3001	34.30	2.24%	6.529	0.482
N-Butane	58.12	1.87%	1.0863	3010.5	56.27	3.66%	6.529	0.788
I-Pentane	72.15	0.57%	0.4134	3697.9	21.19	1.39%	5.26	0.195
N-Pentane	72.15	0.43%	0.3088	3706.8	15.87	1.04%	5.26	0.145
Cyclopentane	70.14	0.00%	0.0000	3512.2	0.00	0.00%	5.411	0.000
n-Hexane	86.18	0.72%	0.6162	4403.9	31.49	2.07%	4.404	0.203
other Hexanes	86.18	0.00%	0.0000	4403.49	0.00	0.00%	4.509	0.000
Heptanes	100.21	0.00%	0.0000	5100.3	0.00	0.00%	3.787	0.000
2,2,4-TMP	114.23	0.00%	0.0000	5778.9	0.00	0.00%	3.865	0.000
Benzene	78.11	0.00%	0.0000	3591.0	0.00	0.00%	4.858	0.000
Toluene	92.14	0.00%	0.0000	4273.5	0.00	0.00%	4.119	0.000
Ethylbenzene	106.17	0.00%	0.0000	4970.6	0.00	0.00%	3.574	0.000
Xylenes	106.17	0.00%	0.0000	4957.0	0.00	0.00%	3.574	0.000
C8+	114.23	0.00%	0.0000	5796.1	0.00	0.00%	3.322	0.000
Total		100%	29.72		1325.03	100%		7.792
			(mixture mol. wt)		*(mixture heating value)*			

NMEHC (VOC) *15.49%*

Emission Unit: 44
Source Description: Air-assisted flare during scheduled shutdowns of the Thermal oxidizer (Unit 46)

MDEA Tail Gas (Carried forward from previous applications; normally routed to the thermal oxidizer)

Component	MW	Wet vol/mol%	MW * wet vol %	LHV Btu/scf	Btu/scf * wet vol %	Mass Fraction (wet)	Spec. Volume ft^3/lb	Spec. Volume VOC ft^3/lb
Water	18.02	7.22%	1.3012	0	0.00	3.08%	21.06	
Nitrogen	28.01	0.00%	0.0000	0	0.00	0.00%	13.547	
CO_2	44.01	92.98%	40.9188	0	0.00	96.73%	8.623	
H_2S	34.08	0.02%	0.0064	586.71	0.11	0.02%	11.136	
Methane	16.04	0.01%	0.0015	909.1	0.09	0.00%	23.65	
Ethane	30.07	0.18%	0.0547	1617.8	2.95	0.13%	12.62	
Propane	44.10	0.02%	0.0074	2315.9	0.39	0.02%	8.606	0.009
I-Butane	58.12	0.00%	0.0000	3001	0.00	0.00%	6.529	0.000
N-Butane	58.12	0.02%	0.0109	3010.5	0.57	0.03%	6.529	0.008
I-Pentane	72.15	0.00%	0.0000	3697.9	0.00	0.00%	5.26	0.000
N-Pentane	72.15	0.00%	0.0000	3706.8	0.00	0.00%	5.26	0.000
Cyclopentane	70.14	0.00%	0.0000	3512.2	0.00	0.00%	5.411	0.000
n-Hexane	86.18	0.00%	0.0000	4403.9	0.00	0.00%	4.404	0.000
other Hexanes	86.18	0.00%	0.0000	4403.49	0.00	0.00%	4.509	0.000
Heptanes	100.21	0.00%	0.0000	5100.3	0.00	0.00%	3.787	0.000
2,2,4-TMP	114.23	0.00%	0.0000	5778.9	0.00	0.00%	3.865	0.000
Benzene	78.11	0.00%	0.0000	3591.0	0.00	0.00%	4.858	0.000
Toluene	92.14	0.00%	0.0000	4273.5	0.00	0.00%	4.119	0.000
Ethylbenzene	106.17	0.00%	0.0000	4970.6	0.00	0.00%	3.574	0.000
Xylenes	106.17	0.00%	0.0000	4957.0	0.00	0.00%	3.574	0.000
C8+	114.23	0.00%	0.0000	5796.1	0.00	0.00%	3.322	0.000
Total		100%	42.30		4.10	100%		0.017
			(mixture mol. wt)		*(mixture heating value)*			

NMEHC (VOC) *0.04%*

Emission Unit: 44
Source Description: Air-assisted flare during scheduled shutdowns of the Thermal oxidizer (Unit 46)

Fuel Data

	300.0	Btu/scf, Target HV of all f'lared gas		
Pilot	20	scf/hr	Nominal pilot	
	0.020	Mscf/hr		
	900.00	Btu/scf	Min typical natural gas	
	18.0	MBtu/hr	Pilot heat input	Btu/scf * dscf/hr / 1000
	0.02	MMBtu/hr		MBtu/hr / 1000
SSM / Assist	60854	scf/hr	Maximum allowed SSM flowrate while meeting NSPS A heat content requirement	
	1030.0	Btu/scf	Residue gas	
	62.7	MMBtu/hr	SSM	
Flared Gas	16200.00	scf/hr	Flow measurements; 03/02/2010	
(Entec March 2010)	25%	Safety factor		
	20.25	Mscf/hr		
	1325.0	Btu/scf	Calculated	
	26.8	MMBtu/hr	Flared gas heat input	
Tail Gas	532.8	moles/hr	design	
	0.73024	gas constant; ft3*atm/R/lb-mol		
	202181.7	scf/hr (ideal gas law)		
	4.1	Btu/scf	Calculated	
	0.8	MMBtu/hr	Tail gas heat input	
Total				
	89.5	MMBtu/hr	Pilot + SSM / Assist+ Flared Gas (Entec)	
	63.5	MMBtu/hr	Pilot + SSM (Assist) +MDEA tail gas	
	90.4	MMBtu/hr	Pilot+ Assist+ Flared gas + MDEA tail gas	

Stack Parameters

	1000	˚C	Exhaust temperature	Per NMAQB guidelines
	20	m/sec	Exhaust velocity	Per NMAQB guidelines
	130	ft	Flare height	Design
Pilot				
	16.04	g/mol	Fuel gas molecular weight	Mol. wt. of methane, the dominant species
	1,260	cal/sec	Heat release (q)	MMBtu/hr * 10^6 * 252 cal/Btu ÷ 3600 sec/hr
	1,018		q_n	$q_n = q(1-0.048(MW)^{1/2})$
	0.03	m	Effective stack diameter (D)	$D = (10^{-6}q_n)^{1/2}$
All Flared Gas				
	41.37	g/mol	Fuel gas molecular weight	Volume weighted mol. wt. of all components
	6.33E+06	cal/sec	Heat release (q)	MMBtu/hr * 10^6 * 252 cal/Btu ÷ 3600 sec/hr
	4.37E+06		q_n	$q_n = q(1-0.048(MW)^{1/2})$
	2.091	m	Effective stack diameter (D)	$D = (10^{-6}q_n)^{1/2}$

Emission Unit: 44
Source Description: Air-assisted flare during scheduled shutdowns of the Thermal oxidizer (Unit 46)

Emission Rates

Pilot and SSM / Assist

NOx	CO	VOC	H_2S	SO_2	Units	
0.1380	0.2755				lb/MMBtu	TNRCC RG-109 (high Btu; other)
			4E-04		lb H_2S/Mscf	Purchased sweet natural gas fuel, 0.25 gr H_2S/100scf
			7.14E-06		lb H_2S/hr	H_2S rate * fuel usage
				7E-03	lb S/Mscf	Purchased sweet natural gas fuel, 5 gr S/100scf
				0.43	lb SO_2/hr*	SO_2 rate * fuel usage
		0.00%			mol%	Assume no VOC content in purchased fuel (methane)
		23.7			ft^3/lb	Specific volume (methane)
		0.00			lb/hr	vol. Gas * mole fraction / specific volume
100%	100%	100%	100%	100%	%	Safety Factor
0.2760	0.5510				lb/MMBtu	Unit emission rate with Safety Factor
17.305	**0.010**				lb/hr	lb/MMBtu * MMBtu/hr
		0.000	**1.4E-05**	**0.87**	lb/hr	98% combustion H_2S; 100% conversion to SO_2

Flared gas

NOx	CO	VOC	H_2S	SO_2	Units	
0.1380	0.2755				lb/MMBtu	TNRCC RG-109 (high Btu; other)
		15.49%	0.00%		mol%	Flare Gas (assume no VOC content in purchased fuel)
		7.8	11.136		ft^3/lb	Specific volume
		402.49	0.000		lb/hr	vol. Gas * mole fraction / specific volume
12.36	**24.67**				lb/hr	lb/MMBtu * MMBtu/hr
		402.49	0.0		lb/hr	Uncontrolled emissions
		1762.91	0.0		tpy	Uncontrolled emissions

Flaring MDEA tail gas

NOx	CO	VOC	H_2S	SO_2	Units	
0.0641	0.5496				lb/MMBtu	TNRCC RG-109 (low Btu; other)
		0.04%	0.02%		mol%	Flare Gas (assume no VOC content in purchased fuel)
		0.017	11.136		ft^3/lb	Specific volume
		0.02	3.408		lb/hr	vol. Gas * mole fraction / specific volume
4.07	**34.91**				lb/hr	lb/MMBtu * MMBtu/hr
		0.02	3.4		lb/hr	Uncontrolled emissions
		0.07	14.9		tpy	Uncontrolled emissions

pilot + offgas+tail gas	33.73	59.59	8.05	0.07	7.28	lb/hr	98% combustion H_2S and VOC; 100% conversion to SO_2
	4.18	7.39	1.00	0.01	0.90	tpy	248 hrs/yr
Safety factor	**35%**	**35%**	**35%**	**50%**	**50%**		
	45.54	**80.45**	**10.87**	**0.10**	**10.93**	lb/hr	
	5.65	**9.98**	**1.35**	**0.01**	**1.35**	tpy	

HAP Emissions

HAP	Off gas Vol %	Vol/Day (scf/hr)	Spec. Vol (scf/lb)	Uncontrolled Emissions (lb/hr)	(tpy)	Controlled * (lb/hr)	(tpy)
Hexanes	0.715%	115.8	4.404	26.3	4.8	5.26E-01	9.60E-02
Benzene	0.000%	0.00	3.865	0.00E+00	0.00E+00	0.00E+00	0.00E+00
Toluene	0.000%	0.00	4.119	0.00E+00	0.00E+00	0.00E+00	0.00E+00
Ethylbenzene	0.000%	0.00	3.574	0.00E+00	0.00E+00	0.00E+00	0.00E+00
Xylenes	0.000%	0.00	3.574	0.00E+00	0.00E+00	0.00E+00	0.00E+00
Total						0.5260	0.0960

HAP Emissions

HAP	Tail gas Vol %	Vol/Day (scf/day)	Spec. Vol (scf/lb)	Uncontrolled Emissions (lb/day)	(tpy)	Controlled * (lb/hr)	(tpy)
Hexanes	0.000%	0	4.404	0.0	0.0		0.0000
Benzene	0.000%	0	3.865	0.0	0.0		0.0000
Toluene	0.000%	0	4.119	0.0	0.0		0.0000
Ethylbenzene	0.000%	0	3.574	0.0	0.0		0.0000
Xylenes	0.000%	0	3.574	0.0	0.0		0.0000

Emission Unit: 44
Source Description: Air-assisted flare during routine SSM (normal TO operation)

Flared Gas Composition (Gas analysis 03/02/2010):

Component	MW	Wet vol/mol%	MW * wet vol %	LHV Btu/scf	Btu/scf * wet vol %	Mass Fraction (wet)	Spec. Volume ft^3/lb	Spec. Volume VOC ft^3/lb	Wtd. Spec. Volume ft^3/lb
Water	18.02	0.00%	0.0000	0	0.00	0.00%	21.06		0.000
Nitrogen	28.01	8.50%	2.3811	0	0.00	8.01%	13.547		1.151
Argon/Oxygen	31.99	2.08%	0.6654	0	0.00	2.24%	13.5		0.281
CO_2	44.01	4.65%	2.0478	0	0.00	6.89%	8.623		0.401
H_2S	34.08	0.00%	0.0000	586.71	0.00	0.00%	11.136		0.000
Methane	16.04	28.79%	4.6194	909.1	261.77	15.54%	23.65		6.810
Ethane	30.07	40.49%	12.1741	1617.8	654.98	40.96%	12.62		5.109
Propane	44.10	10.76%	4.7444	2315.9	249.17	15.96%	8.606	5.979	0.926
I-Butane	58.12	1.14%	0.6643	3001	34.30	2.24%	6.529	0.482	0.075
N-Butane	58.12	1.87%	1.0863	3010.5	56.27	3.66%	6.529	0.788	0.122
I-Pentane	72.15	0.57%	0.4134	3697.9	21.19	1.39%	5.26	0.195	0.030
N-Pentane	72.15	0.43%	0.3088	3706.8	15.87	1.04%	5.26	0.145	0.023
Cyclopentane	70.14	0.00%	0.0000	3512.2	0.00	0.00%	5.411	0.000	0.000
n-Hexane	86.18	0.72%	0.6162	4403.9	31.49	2.07%	4.404	0.203	0.031
other Hexanes	86.18	0.00%	0.0000	4403.49	0.00	0.00%	4.509	0.000	0.000
Heptanes	100.21	0.00%	0.0000	5100.3	0.00	0.00%	3.787	0.000	0.000
2,2,4-TMP	114.23	0.00%	0.0000	5778.9	0.00	0.00%	3.865	0.000	0.000
Benzene	78.11	0.00%	0.0000	3591.0	0.00	0.00%	4.858	0.000	0.000
Toluene	92.14	0.00%	0.0000	4273.5	0.00	0.00%	4.119	0.000	0.000
Ethylbenzene	106.17	0.00%	0.0000	4970.6	0.00	0.00%	3.574	0.000	0.000
Xylenes	106.17	0.00%	0.0000	4957.0	0.00	0.00%	3.574	0.000	0.000
C8+	114.23	0.00%	0.0000	5796.1	0.00	0.00%	3.322	0.000	0.000
Total		100%	29.72		1325.03	100%		7.792	14.959
			(mixture mol. wt)		*(mixture heating value)*				

NMEHC (VOC) *15.49%*

Emission Unit: 44
Source Description: Air-assisted flare during routine SSM (normal TO operation)

Residue Gas Composition

Component	MW	Wet vol/mol%	Dry vol/mol%	MW * dry vol %	HHV Btu/scf	Btu/scf * dry vol %	Mass Fraction (dry)	Spec. Volume ft3/lb	Spec. Volume ft^3/lb
Water	18.02	0.00%						21.06	0
Nitrogen	28.01	0.50%	0.50%	0.140	0	0.00	0.83%	13.547	0.067735
CO2	44.01	0.50%	0.50%	0.220	0	0.00	1.31%	8.623	0.043115
H2S	34.08	0.00%	0.00%	0.000	637.02	0.00	0.00%	11.136	0
Methane	16.04	95.00%	95.00%	15.241	1009.7	959.22	90.70%	23.65	22.4675
Ethane	30.07	4.00%	4.00%	1.203	1768.7	70.75	7.16%	12.62	0.5048
Propane	44.10	0.00%	0.00%	0.000	2517.2	0.00	0.00%	8.606	0
I-Butane	58.12	0.00%	0.00%	0.000	3252.6	0.00	0.00%	6.529	0
N-Butane	58.12	0.00%	0.00%	0.000	3262	0.00	0.00%	6.529	0
I-Pentane	72.15	0.00%	0.00%	0.000	3999.7	0.00	0.00%	5.26	0
N-Pentane	72.15	0.00%	0.00%	0.000	4008.7	0.00	0.00%	5.26	0
Hexanes	86.18	0.00%	0.00%	0.000	4756.1	0.00	0.00%	4.404	0
C7+	100.21	0.00%	0.00%	0.000	5502	0.00	0.00%	3.787	0
Total		100%	100%	16.80		1029.96	100%		23.08315
Dry total		100%		(mixture mol. wt)		(mixture heating value)			
voc %			0.00%						

Emission Unit: 44
Source Description: Air-assisted flare during routine SSM (normal TO operation)

Fuel Data

Pilot	20	scf/hr	Nominal pilot	
	0.020	Mscf/hr		
	900.00	Btu/scf	Min typical natural gas	
	18.0	MBtu/hr	Pilot heat input	Btu/scf * dscf/hr / 1000
	0.02	MMBtu/hr		MBtu/hr / 1000
SSM	360000	scf/hr		
	1030.0	Btu/scf	Residue gas	
	370.8	MMBtu/hr	SSM	
Flared Gas	16200	scf/hr	Flow measurements; 03/02/2010	
(Entec March 2010)	25%	Safety factor		
	20.25	Mscf/hr		
	1325.0	Btu/scf	Calculated	
	26.8	MMBtu/hr	Flared gas heat input	
Total	380,270	scf/hr		
	397.6	MMBtu/hr	Pilot + SSM / Assist+ Flared Gas (Entec)	

Stack Parameters

	1000	°C	Exhaust temperature	Per NMAQB guidelines
	20	m/sec	Exhaust velocity	Per NMAQB guidelines
	130	ft	Flare height	Design
Pilot				
	16.04	g/mol	Fuel gas molecular weight	Mol. wt. of methane, the dominant species
	1,260	cal/sec	Heat release (q)	MMBtu/hr * 10^6 * 252 cal/Btu ÷ 3600 sec/hr
	1,018		q_n	$q_n = q(1-0.048(MW)^{1/2})$
	0.03	m	Effective stack diameter (D)	$D = (10^{-6}q_n)^{1/2}$
Pilot + SSM + Flared Gas				
	17.36	g/mol	Fuel gas molecular weight	Volume weighted mol. wt. of all components
	2.78E+07	cal/sec	Heat release (q)	MMBtu/hr * 10^6 * 252 cal/Btu ÷ 3600 sec/hr
	2.23E+07		q_n	$q_n = q(1-0.048(MW)^{1/2})$
	4.7190	m	Effective stack diameter (D)	$D = (10^{-6}q_n)^{1/2}$

Emission Unit: 44
Source Description: Air-assisted flare during routine SSM (normal TO operation)

Emission Rates
Pilot

NOx	CO	VOC	H_2S	SO_2	Units	
0.1380	0.2755				lb/MMBtu	TNRCC RG-109 (high Btu; other)
			4E-04		lb H_2S/Mscf	Purchased sweet natural gas fuel, 0.25 gr H_2S/100scf
			7.14E-06		lb H_2S/hr	H_2S rate * fuel usage
				7E-03	lb S/Mscf	Purchased sweet natural gas fuel, 5 gr S/100scf
				1E-04	lb SO_2/hr*	SO_2 rate * fuel usage
		0.00%			mol%	Assume no VOC content in purchased fuel (methane)
		23.7			ft^3/lb	Specific volume (methane)
		0.00			lb/hr	vol. Gas * mole fraction / specific volume
0.002	**0.005**				lb/hr	lb/MMBtu * MMBtu/hr
		0.000	**1.4E-07**	**1.6E-04**	lb/hr	98% combustion H_2S; 100% conversion to SO_2
0.01	**0.02**	**0.000**	**6.3E-07**	**6.8E-04**	tpy	8760 hrs/yr

Flared gas + SSM

	NOx	CO	VOC	H_2S	SO_2	Units	
	0.1380	0.2755				lb/MMBtu	TNRCC RG-109 (high Btu; other)
			15.49%	0.00%		mol%	Flare Gas (assume no VOC content in purchased fuel)
			7.8	11.136		ft^3/lb	Specific volume
			402.49	0.000		lb/hr	vol. Gas * mole fraction / specific volume
	54.88	**109.55**				lb/hr	lb/MMBtu * MMBtu/hr
			402.49	0.0		lb/hr	Uncontrolled emissions
			1762.91	0.0		tpy	Uncontrolled emissions
SSM + Flared Gas	54.88	109.55	8.05	0.00	0.00	lb/hr	98% combustion H_2S and VOC; 100% conversion to SO_2
	8.23	13.58	1.00	0.00	0.00	tpy	300 SSM hrs/ yr
Safety factor	**0%**	**0%**	**0%**	**0%**	**0%**		
Pilot + SSM + Flared Gas	**54.88**	**109.56**	**8.05**	**0.00**	**0.00**	lb/hr	
	8.24	**13.61**	**1.00**	**0.00**	**0.00**	tpy	

HAP Emissions Off gas

HAP	Vol %	Vol/Day (scf/hr)	Spec. Vol (scf/lb)	Uncontrolled Emissions (lb/hr)	(tpy)	Controlled * (lb/hr)	(tpy)
Hexanes	0.715%	115.8	4.404	26.3	4.8	5.26E-01	9.60E-02
Benzene	0.000%	0.00	3.865	0.00E+00	0.00E+00	0.00E+00	0.00E+00
Toluene	0.000%	0.00	4.119	0.00E+00	0.00E+00	0.00E+00	0.00E+00
Ethylbenzene	0.000%	0.00	3.574	0.00E+00	0.00E+00	0.00E+00	0.00E+00
Xylenes	0.000%	0.00	3.574	0.00E+00	0.00E+00	0.00E+00	0.00E+00
Total						0.5260	0.0960

HAP Emissions Tail gas

HAP	Vol %	Vol/Day (scf/day)	Spec. Vol (scf/lb)	Uncontrolled Emissions (lb/day)	(tpy)	Controlled * (lb/hr)	(tpy)
Hexanes	0.000%	0	4.404	0.0	0.0		0.0000
Benzene	0.000%	0	3.865	0.0	0.0		0.0000
Toluene	0.000%	0	4.119	0.0	0.0		0.0000
Ethylbenzene	0.000%	0	3.574	0.0	0.0		0.0000
Xylenes	0.000%	0	3.574	0.0	0.0		0.0000

Emission Unit: 42
Source Description: air-assisted flare during routine SSM

Residue Gas Composition

Component	MW	Wet vol/mol%	Dry vol/mol%	MW * dry vol %	HHV Btu/scf	Btu/scf * dry vol %	Mass Fraction (dry)	Spec. Volume ft3/lb	Wtd. Spec. Volume ft^3/lb	Spec. Volume, VOC ft^3/lb
Water	18.02	0.00%						21.06	0	
Nitrogen	28.01	1.00%	1.00%	0.280	0	0.00	1.44%	13.547	0.195733775	
CO2	44.01	0.50%	0.50%	0.220	0	0.00	1.13%	8.623	0.097867068	
H2S	34.08	0.00%	0.00%	0.000	637.02	0.00	0.00%	11.136	0	
Methane	16.04	86.00%	86.00%	13.797	1009.7	868.34	71.16%	23.65	16.82953045	
Ethane	30.07	7.00%	7.00%	2.105	1768.7	123.81	10.86%	12.62	1.370085413	
Propane	44.10	3.00%	3.00%	1.323	2517.2	75.52	6.82%	8.606	0.587	4.69418
I-Butane	58.12	0.50%	0.50%	0.291	3252.6	16.26	1.50%	6.529	0.098	0.59355
N-Butane	58.12	1.00%	1.00%	0.581	3262	32.62	3.00%	6.529	0.196	1.18709
I-Pentane	72.15	0.30%	0.30%	0.216	3999.7	12.00	1.12%	5.26	0.059	0.28691
N-Pentane	72.15	0.20%	0.20%	0.144	4008.7	8.02	0.74%	5.26	0.039	0.19127
Hexanes	86.18	0.50%	0.50%	0.431	4756.1	23.78	2.22%	4.404	0.098	0.40036
C7+	100.21	0.00%	0.00%	0.000	5502	0.00	0.00%	3.787	0.000	0
Total		100%	100%	19.39		1160.35	100%		19.56975	7.35336
Dry total		100%		(mixture mol. wt)		(mixture heating value)				
voc %			5.50%							

Emission Unit: 42
Source Description: air-assisted flare during routine SSM

Fuel Data

Pilot	20	scf/hr	Nominal pilot	
	0.020	Mscf/hr		
	900.00	Btu/scf	Min typical natural gas	
	18.0	MBtu/hr	Pilot heat input	Btu/scf * dscf/hr / 1000
	0.02	MMBtu/hr		MBtu/hr / 1000
SSM	140000	scf/hr		
	1160.3	Btu/scf	Residue gas	
	162.4	MMBtu/hr	SSM	
Total	140020	scf/hr		
	33.6	MMscf/yr		
	162.5	MMBtu/hr	Pilot + SSM / Assist+ Flared Gas (Entec)	

Stack Parameters

	1000	˚C	Exhaust temperature	Per NMAQB guidelines
	20	m/sec	Exhaust velocity	Per NMAQB guidelines
	130	ft	Flare height	Design
Pilot				
	16.04	g/mol	Fuel gas molecular weight	Mol. wt. of methane, the dominant species
	1,260	cal/sec	Heat release (q)	MMBtu/hr * 10^6 * 252 cal/Btu ÷ 3600 sec/hr
	1,018		q_n	$q_n = q(1-0.048(MW)^{1/2})$
	0.03	m	Effective stack diameter (D)	$D = (10^{-6}q_n)^{1/2}$
Pilot + SSM				
	19.39	g/mol	Fuel gas molecular weight	Volume weighted mol. wt. of all components
	1.14E+07	cal/sec	Heat release (q)	MMBtu/hr * 10^6 * 252 cal/Btu ÷ 3600 sec/hr
	8.97E+06		q_n	$q_n = q(1-0.048(MW)^{1/2})$
	2.9948	m	Effective stack diameter (D)	$D = (10^{-6}q_n)^{1/2}$

Emission Unit: 42
Source Description: air-assisted flare during routine SSM

Emission Rates

Pilot

	NOx	CO	VOC	H_2S	SO_2	Units	
	0.1380	0.2755				lb/MMBtu	TNRCC RG-109 (high Btu; other)
				4E-04		lb H_2S/Mscf	Purchased sweet natural gas fuel, 0.25 gr H_2S/100scf
				7.14E-06		lb H_2S/hr	H_2S rate * fuel usage
					7E-03	lb S/Mscf	Purchased sweet natural gas fuel, 5 gr S/100scf
					1E-04	lb SO_2/hr*	SO_2 rate * fuel usage
			0.00%			mol%	Assume no VOC content in purchased fuel (methane)
			23.7			ft^3/lb	Specific volume (methane)
			0.00			lb/hr	vol. Gas * mole fraction / specific volume
	0.002	**0.005**				lb/hr	lb/MMBtu * MMBtu/hr
			0.000	**1.4E-07**	**1.6E-04**	lb/hr	98% combustion H_2S; 100% conversion to SO_2
	0.01	**0.02**	**0.000**	**6.3E-07**	**6.8E-04**	tpy	8760 hrs/yr

SSM

	NOx	CO	VOC	H_2S	SO_2	Units	
	0.1380	0.2755				lb/MMBtu	TNRCC RG-109 (high Btu; other)
			5.50%	0.00%		mol%	Flare Gas (assume no VOC content in purchased fuel)
			23.7	11.136		ft^3/lb	Specific volume
			325.58	0.000		lb/hr	vol. Gas * mole fraction / specific volume
	22.42	**44.76**				lb/hr	lb/MMBtu * MMBtu/hr
			325.58	0.0		lb/hr	Uncontrolled emissions
			1426.05	0.0		tpy	Uncontrolled emissions
	22.42	44.76	6.51	0.00	0.00	lb/hr	98% combustion H_2S and VOC; 100% conversion to SO_2
	2.69	5.37	0.78	0.00	0.00	tpy	240 SSM hrs per year
Safety factor	**0%**	**0%**	**0%**	**0%**	**0%**		
pilot + SSM	**22.43**	**44.78**	**6.51**	**0.00**	**0.00**	lb/hr	
	2.70	**5.39**	**0.78**	**0.00**	**0.00**	tpy	

Emission Unit: 42
Source Description: air-assisted flare during routine SSM

HAP Emissions

HAP	Residue Gas Vol %	Vol/Day (scf/hr)	Spec. Vol (scf/lb)	Uncontrolled Emissions (lb/hr)	Uncontrolled Emissions (tpy)	Controlled * (lb/hr)	Controlled * (tpy)
Hexanes	0.500%	700.0	3.787	184.8	33.7	3.70E+00	6.75E-01
Benzene	0.000%	0.0	3.787	0.00E+00	0.00E+00	0.00E+00	0.00E+00
Toluene	0.000%	0.0	3.787	0.00E+00	0.00E+00	0.00E+00	0.00E+00
Ethylbenzene	0.000%	0.0	3.787	0.00E+00	0.00E+00	0.00E+00	0.00E+00
Xylenes	0.000%	0.0	3.787	0.00E+00	0.00E+00	0.00E+00	0.00E+00
Total						3.6969	0.6747

Section 6.a

Green House Gas Emissions

(Submitting under 20.2.70, 20.2.72 20.2.74 NMAC)

Title V (20.2.70 NMAC), Minor NSR (20.2.72 NMAC), and PSD (20.2.74 NMAC) applicants must estimate and report greenhouse gas (GHG) emissions to verify the emission rates reported in the public notice, determine applicability to 40 CFR 60 Subparts, and to evaluate Prevention of Significant Deterioration (PSD) applicability. GHG emissions that are subject to air permit regulations consist of the sum of an aggregate group of these six greenhouse gases: carbon dioxide (CO_2), nitrous oxide (N_2O), methane (CH_4), hydrofluorocarbons (HFCs), perfluorocarbons (PFCs), and sulfur hexafluoride (SF_6).

Calculating GHG Emissions:

1. Calculate the ton per year (tpy) GHG mass emissions and GHG CO_2e emissions from your facility.
2. GHG mass emissions are the sum of the total annual tons of greenhouse gases without adjusting with the global warming potentials (GWPs). GHG CO_2e emissions are the sum of the mass emissions of each individual GHG multiplied by its GWP found in Table A-1 in 40 CFR 98 Mandatory Greenhouse Gas Reporting.
3. Emissions from routine or predictable start up, shut down, and maintenance must be included.
4. Report GHG mass and GHG CO_2e emissions in Table 2-P of this application. Emissions are reported in **short** tons per year and represent each emission unit's Potential to Emit (PTE).
5. All Title V major sources, PSD major sources, and all power plants, whether major or not, must calculate and report GHG mass and CO2e emissions for each unit in Table 2-P.
6. For minor source facilities that are not power plants, are not Title V, and are not PSD there are three options for reporting GHGs in Table 2-P: 1) report GHGs for each individual piece of equipment; 2) report all GHGs from a group of unit types, for example report all combustion source GHGs as a single unit and all venting GHGs as a second separate unit; 3) or check the following ☐ By checking this box, the applicant acknowledges the total CO2e emissions are less than 75,000 tons per year.

Sources for Calculating GHG Emissions:

- Manufacturer's Data
- AP-42 Compilation of Air Pollutant Emission Factors at http://www.epa.gov/ttn/chief/ap42/index.html
- EPA's Internet emission factor database WebFIRE at http://cfpub.epa.gov/webfire/
- 40 CFR 98 Mandatory Green House Gas Reporting except that tons should be reported in short tons rather than in metric tons for the purpose of PSD applicability.
- API Compendium of Greenhouse Gas Emissions Methodologies for the Oil and Natural Gas Industry. August 2009 or most recent version.
- Sources listed on EPA's NSR Resources for Estimating GHG Emissions at http://www.epa.gov/nsr/clean-air-act-permitting-greenhouse-gases:

Global Warming Potentials (GWP):
Applicants must use the Global Warming Potentials codified in Table A-1 of the most recent version of 40 CFR 98 Mandatory Greenhouse Gas Reporting. The GWP for a particular GHG is the ratio of heat trapped by one unit mass of the GHG to that of one unit mass of CO_2 over a specified time period.

"Greenhouse gas" for the purpose of air permit regulations is defined as the aggregate group of the following six gases: carbon dioxide, nitrous oxide, methane, hydrofluorocarbons, perfluorocarbons, and sulfur hexafluoride. **(20.2.70.7 NMAC, 20.2.74.7 NMAC).** You may also find GHGs defined in 40 CFR 86.1818-12(a).

Metric to Short Ton Conversion:
Short tons for GHGs and other regulated pollutants are the standard unit of measure for PSD and title V permitting programs. 40 CFR 98 Mandatory Greenhouse Reporting requires metric tons.
1 metric ton = 1.10231 short tons (per Table A-2 to Subpart A of Part 98 – Units of Measure Conversions)

Facility Name: Chaco Natural Gas Processing Plant
Industry Segment: Onshore natural gas processing

Subpart W

Applicable Process Units:

Glycol Dehydrator	Glycol Dehyrator
Flare	Unit 41 - Cryo Flare
Flare	Units 42/43 - Inlet and Emergency Flares
Unit 8 & 11	Chaco Reciprocating Compressor
Units 12, 13, 14	Chaco Reciprocating Compressor
Units 17 & 18	Chaco GE Frame 5 Centrifugal Compressors
Units 35, 36, 37	Chaco Residue Centrifugal Compressor (Mars)
Unit 49	Chaco Transwestern Centrifugal (Centaur)
Unit 50	Chaco Bisti #8 Reciprocating Compressor
Unit C-1000, C-2000, C-3000	Chaco Electric Reciprocating Compressor

Subpart C

Applicable Process Units:

Eng 8, 11
Eng 12, 13, 14
Eng 50
Turb 17, 18
Turb 35, 36, 37
Turb 49
Glycol Regenerator Heater
Mole sieve regen. Heater
TO Unit 46

Chaco Plant Total Emissions

	MT/yr CO_2	MT/yr CH_4	MT/yr N_2O	MT/yr CO_2e
Cryo Flare (44)	22,198.76	28.43	0.03	**22,919.09**
Inlet/Emergency Flare (42/43)	18,819.46	127.11	0.04	**22,010.08**
Glycol Dehydrator (51b)	63.59	0.09	0.00	**65.98**
Engine Unit 8 Blowdowns	0.17	0.08	-	**2.29**
Engine Unit 11 Blowdowns	0.17	0.08	-	**2.29**
Engine Unit 12 Blowdowns	0.17	0.08	-	**2.29**
Engine Unit 13 Blowdowns	0.17	0.08	-	**2.29**
Engine Unit 14 Blowdowns	0.17	0.08	-	**2.29**
Turbine 17 Blowdowns	0.01	0.16	-	**4.05**
Turbine 18 Blowdowns	0.002	0.04	-	**1.09**
Engine Unit 32 Blowdowns	0.17	0.08	-	**2.29**
Engine Unit 33 Blowdowns	0.17	0.08	-	**2.29**
Engine Unit 34 Blowdowns	0.17	0.08	-	**2.29**
Turbine 35 Blowdowns	0.003	0.002	-	**0.06**
Turbine 36 Blowdowns	0.003	0.002	-	**0.06**
Turbine 37 Blowdowns	0.003	0.002	-	**0.06**
Turbine 49 (TW) Blowdowns	0.001	0.001	-	**0.03**
Engine 50 (Bisti 8) Blowdowns	0.17	0.08	-	**2.29**
Engine Unit 8 Combustion	12,782.15	0.24	0.02	**12,795.36**
Engine Unit 11 Combustion	12,782.15	0.24	0.02	**12,795.36**
Engine Unit 12 Combustion	12,503.27	0.24	0.02	**12,516.18**
Engine Unit 13 Combustion	12,503.27	0.24	0.02	**12,516.18**
Engine Unit 14 Combustion	12,503.27	0.24	0.02	**12,516.18**
Engine 30 Combustion	92.06	0.002	0.0002	**92.15**
Engine 32 Combustion	6,739.68	0.13	0.01	**6,746.64**
Engine 33 Combustion	6,739.68	0.13	0.01	**6,746.64**
Engine 34 Combustion	6,739.68	0.13	0.01	**6,746.64**
Engine 50 (Bisti 8) Combustion	10,458.13	0.20	0.02	**10,468.93**
Regen Heaters (51a) Combustion	2,426.29	0.05	0.005	**2,428.79**
Mol Sieve Heater (48) Combustion	3,569.71	0.07	0.01	**3,573.39**
Turbine 17 Combustion	94,913.30	1.79	0.18	**95,011.33**
Turbine 18 Combustion	93,844.25	1.77	0.18	**93,941.17**
Turbine 35 Combustion	53,917.45	1.02	0.10	**53,973.14**
Turbine 36 Combustion	53,917.45	1.02	0.10	**53,973.14**
Turbine 37 Combustion	53,917.45	1.02	0.10	**53,973.14**
Turbine 49 (TW) Combustion	21,985.30	0.41	0.04	**22,008.01**
Thermal Oxidizer (46) Combustion	4,582.99	0.09	0.01	**4,587.72**
Subpart C	476,917.5	8.99	0.899	**477,410.10**
Subpart W	41,083.3	156.61	0.075	**45,021.11**
		Total CO2e (MTons)		**522,431.20**

Flare Stacks

Cryo Flare (44)

Fuel Consumption (SCF/YR)	257,200,000.00	Fuel consumption + Pilot - Dehy flow
Fuel Composition (Mole Fraction)	0.0465	CO_2
**From Flare Analyses tab*	0.2879	CH_4
	0.4049	Ethane
	0.1076	Propane
	0.0301	Butane
	0.0172	Pentanes +

Total CO_2	**22,198.76**
Total CH_4 Uncombusted	**28.43**
Total N_2O	**0.0318**
Total CO_2e	**22,919.09**

Inlet Flare (42)/Emergency Flare (43)

Fuel Consumption (SCF/YR)	350,600,000.00	Fuel Consump + Pilot
Fuel Composition (Mole Fraction)	0.0073	CO_2
**From Flare Analyses tab*	0.9441	CH_4
	0.0193	Ethane
	0.0079	Propane
	0.0037	Butane
	0.0025	Pentanes +

Total CO_2	**18,819.46**
Total CH_4 Uncombusted	**127.11**
Total N_2O	**0.0433**
Total CO_2e	**22,010.08**

Thermal Oxidizer (46) (Maximum Operation) Potential Greenhouse Gas (GHG) Emission Calculations[2]

Pollutant	Uncontrolled Emission Factor[2]	Factor Units[2]	Heat Input (MMBtu/hr)	Emissions (lb/hr)	Emissions (tpy)	Global Warming Potential (GWP)[2]	CO2e Emissions (tpy)
CO2	53.06	kg CO2/MMBtu	9.86	1,153.40	5,051.88	1	5,051.88
CH4	0.001	kg CH4/MMBtu	9.86	0.02	0.10	25	2.38
N2O	0.0001	kg N2O/MMBtu	9.86	0.00	0.01	298	2.84
TOTAL GHGs	--	--		**1,153.42**	**5,051.98**	--	--
TOTAL GHGs (CO2e)	--	--		--	--	--	**5,057.09**

[1] Heat input based on burner design rate

[2] Based on 40 CFR 98 Subpart C, 98.33(a)(1)(i), Tier 1 Methodology, Equation C-1 and using source specific heat input.

GHG Emissions (lb/hr) = EFGHG (kg/MMBtu) * 2.204623 lb/kg * Heat Input (MMBtu/hr)

GHG Emissions (TPY) = GHG Emissions (lb/hr) * hr/yr * 1 Ton/2000 lb

CO2e Emissions (TPY) = Σ (GHG Emissions (tpy) * GWP)

Where:

EFGHG = Fuel-specific default CO2, CH4, or N2O emission factors from Table C-1 for CO2 (Natural gas - Weighted U.S. Average) and Table C-2 for CH4 and N2O (Natural Gas) of 40 CFR Part 98, Subpart C (kg/MMBtu)

GWP = Global Warming Potentials, 40 CFR 98, Subpart A, Table A-1

Glycol Dehydrator

Emission Rate CO_2 (MT/yr)	63.59
Emission Rate CH_4 (MT/yr)	0.09

*** Emissions Controlled to condenser/combustion device**

	Condenser	
Condenser Flow Rate (SCF/YR)	632,472.00	
Fuel Composition (Mole Fraction)	0.0937	CO_2
**From Condenser Vent Stream from GlyCalc*	0.3910	CH_4
	0.1320	Ethane
	0.1560	Propane
	0.1114	Butane
	0.0572	Pentanes +

Total CO_2 Combusted	**63.59**
Total CH_4 Uncombusted	**0.09**
Total N_2O	**0.0001**
Total CO_2e	**65.98**

Units 8 & 11 - Caterpillar G 3616 SITA Engine and Reciprocating Compressor

	Unit 8	Unit 11
Operating Hours	8,760	8,760

Venting Measurements	**Unit 8**	**Unit 11**	
Blowdown Valve*	30.18	30.18	
Inlet/Residue Compressor	Inlet	Inlet	
Mole Fraction CH_4	0.8357	0.8357	*From Inlet Gas analysis tab*
Mole Fraction CO_2	0.0121	0.0121	*From Inlet Gas analysis tab*

Reporter Emission Factor

***Vents to Flare**

	Uncontrolled Emissions		Controlled Emissions (Flares 42/43)	
CO_2 MT (Blowdown)	*0.1683*	*0.1683*	0.1683	0.1683
Total MT CO_2	0.17	0.17	0.17	0.17
CH_4 MT (Blowdown)	*4.2420*	*4.2420*	0.0848	0.0848
Total CH4 MT	4.24	4.24	0.08	0.08
Total MT CO2e	106.22	106.22	**2.29**	**2.29**

Units 12, 13, 14 - Clark TLA-10 Engine and Reciprocating Compressor

	Unit 12	Unit 13	Unit 14	
Operating Hours	8,760	8,760	8,760	
Venting Measurements	**Unit 12**	**Unit 13**	**Unit 14**	
Blowdown Valve*	30.18	30.18	30.18	
Inlet/Residue Compressor	Inlet	Inlet	Inlet	
Mole Fraction CH_4	0.8357	0.8357	0.8357	*From Inlet Gas analysis tab*
Mole Fraction CO_2	0.0121	0.0121	0.0121	*From Inlet Gas analysis tab*

Reporter Emissions Factor

***Vents to Flare**

	Uncontrolled Emissions			Controlled Emissions (Flares 42/43)		
CO_2 MT (Blowdown)	*0.1683*	*0.1683*	*0.1683*	0.1683	0.1683	0.1683
Total MT CO_2	0.17	0.17	0.17	0.17	0.17	0.17
CH_4 MT (Blowdown)	*4.2420*	*4.2420*	*4.2420*	0.0848	0.0848	0.0848
Total CH4 MT	4.24	4.24	4.24	0.08	0.08	0.08
TOTAL MT CO2e	106.22	106.22	106.22	**2.29**	**2.29**	**2.29**

Unit 17 & 18 - GE Frame 5 Turbine and Centrifugal Compressor

	Unit 17 (C-1)	Unit 18 (C-2)
Operating Hours	8,760	8,760

Venting Measurements	**Unit 17 (C-1)**	**Unit 18 (C-2)**	
Blowdown Valve	1.15	0.31	
Inlet/Residue Compressor	Inlet	Inlet	
Mole Fraction CH_4	0.8357	0.8357	*From Inlet Gas analysis tab*
Mole Fraction CO_2	0.0121	0.0121	*From Inlet Gas analysis tab*

Reporter Emissions Factor

	All Blowdowns are Uncontrolled (SSM Blowdown)	
CO_2 MT (Blowdown)	0.0064	0.0017
Total MT CO_2	**0.01**	**0.002**
CH_4 MT (Blowdown)	0.1616	0.0436
Total CH_4 MT	**0.16**	**0.04**
Total CO2e	**4.05**	**1.09**

Units 32, 33, 34 - Caterpillar G3608 Engine and Reciprocating Compressor

	Unit 32	Unit 33	Unit 34	
Operating Hours	8,760	8,760	8,760	
Venting Measurements	**Unit 32**	**Unit 33**	**Unit 34**	
Blowdown Valve*	30.18	30.18	30.18	
Inlet/Residue Compressor	Inlet	Inlet	Inlet	
Mole Fraction CH_4	0.8357	0.8357	0.8357	*From Inlet Gas analysis tab*
Mole Fraction CO_2	0.0121	0.0121	0.0121	*From Inlet Gas analysis tab*

Reporter Emissions Factor

***Vents to Flare**

	Uncontrolled Emissions			Controlled Emissions (Flares 42/43)		
CO_2 MT (Blowdown)	*0.1683*	*0.1683*	*0.1683*	0.1683	0.1683	0.1683
Total MT CO_2	0.17	0.17	0.17	0.17	0.17	0.17
CH_4 MT (Blowdown)	*4.2420*	*4.2420*	*4.2420*	0.0848	0.0848	0.0848
Total CH4 MT	4.24	4.24	4.24	0.08	0.08	0.08
TOTAL MT CO2e	106.22	106.22	106.22	**2.29**	**2.29**	**2.29**

Unit 35, 36, 37 - Solar Mars Turbine and Centrifugal Compressor

	Unit 35	Unit 36	Unit 37	
Operating Hours	8,760	8,760	8,760	
Venting Measurements	**Unit 35**	**Unit 36**	**Unit 37**	
Blowdown Valve*	0.71	0.72	0.71	
Inlet/Residue Compressor	Residue	Residue	Residue	
Mole Fraction CH_4	0.9668	0.9668	0.9668	*From Residue Gas Analysis*
Mole Fraction CO_2	0.0090	0.0090	0.0090	*From Residue Gas Analysis*

Reporter Emissions Factor

***Vents to Flare**

	Uncontrolled Emissions			Controlled Emissions (Flares 42/43)		
CO_2 MT (Blowdown)	*0.0029*	*0.0030*	*0.0029*	0.0029	0.0030	0.0029
Total MT CO2	0.003	0.003	0.003	0.003	0.003	0.003
CH_4 MT (Blowdown)	*0.1155*	*0.1171*	*0.1155*	0.0023	0.0023	0.0023
Total MT CH4	0.12	0.12	0.12	0.002	0.002	0.002
TOTAL CO2e	2.89	2.93	2.89	**0.06**	**0.06**	**0.06**

Unit 49 - Solar Centaur Turbine and Centrifugal Compressor

	Unit 49 (TW)	
Operating Hours	8,760	

Venting Measurements	**Unit 49 (TW)**	
Blowdown Valve*	0.31	
Inlet/Residue Compressor	Residue	
Mole Fraction CH_4	0.9668	*From Residue Gas analysis*
Mole Fraction CO_2	0.0090	*From Residue Gas analysis*

Reporter Emission Factor

***Vents to Flare**

	Uncontrolled Emissions	Controlled Emissions (Flares 42/43)
CO_2 MT (Blowdown)	*0.0013*	0.0013
Total MT CO2	0.001	0.001
CH_4 MT (Blowdown)	*0.0504*	0.0010
Total MT CH4	0.05	0.001
Total CO2e	1.26	**0.03**

Unit 50 (Bisti #8) - Caterpillar 3612 TALE Engine and Reciprocating Compressor

	Unit 50 (Bisti #8)	
Operating Hours	8,760	

Venting Measurements	**Unit 50 (Bisti #8)**	
Blowdown Valve*	30.18	
Inlet/Residue Compressor	Inlet	
Mole Fraction CH_4	0.8357	*From Inlet analysis*
Mole Fraction CO_2	0.0121	*From Inlet analysis*

Reporter Emissions Factor

***Vents to Flare**

	Uncontrolled Emissions	Controlled Emissions (Flares 42/43)
CO_2 MT (Blowdown)	*0.1683*	0.1683
Total MT CO2	0.17	0.17
CH_4 MT (Blowdown)	*4.2420*	0.0848
Total MT CH_4	4.24	0.08
Total CO2e	106.22	**2.29**

GHG Subpart C

Stationary Combustion Sources, TIER 2 Calculation								GHG Metric Tonnes			
Source ID	Type	Description	Fuel Type	Horsepower	Max Heat Input (MMBtu/ Hr)	Run Time (hrs / yr)	MMBtu / Yr	CO2	CH4	N2O	Total (CO2e)
Engine - Unit 08	Engines	Compressor Engine, Caterpillar 4SLB	Natural Gas	4,445	27.50	8,760.00	240,900.00	12,782.15	0.24	0.02	12,795.36
Engine - Unit 11	Engines	Compressor Engine, Caterpillar 4SLB	Natural Gas	4,445	27.50	8,760.00	240,900.00	12,782.15	0.24	0.02	12,795.36
Engine - Unit 12	Engines	Compressor Engine, Clark 2SLB	Natural Gas	3,400	26.90	8,760.00	235,644.00	12,503.27	0.24	0.02	12,516.18
Engine - Unit 13	Engines	Compressor Engine, Clark 2SLB	Natural Gas	3,400	26.90	8,760.00	235,644.00	12,503.27	0.24	0.02	12,516.18
Engine - Unit 14	Engines	Compressor Engine, Clark 2SLB	Natural Gas	3,400	26.90	8,760.00	235,644.00	12,503.27	0.24	0.02	12,516.18
Engine - Unit 30	Engines	Air compressor engine, Diesel, 450 hp	Natural Gas	450	3.47	500.00	1,735.00	92.06	0.00	0.00	92.15
Engine - Unit 32	Engines	Compressor Engine, Caterpillar 4SLB	Natural Gas	2,222	14.50	8,760.00	127,020.00	6,739.68	0.13	0.01	6,746.64
Engine - Unit 33	Engines	Compressor Engine, Caterpillar 4SLB	Natural Gas	2,222	14.50	8,760.00	127,020.00	6,739.68	0.13	0.01	6,746.64
Engine - Unit 34	Engines	Compressor Engine, Caterpillar 4SLB	Natural Gas	2,222	14.50	8,760.00	127,020.00	6,739.68	0.13	0.01	6,746.64
Engine - Unit 50	Engines	Compressor Engine, Caterpillar 4SLB	Natural Gas	3,550	22.50	8,760.00	197,100.00	10,458.13	0.20	0.02	10,468.93
Glycol Dehydrator Regen Heaters - Unit 51 in EGGRT	Heaters	Glycol Dehydrator Regen Heater, 5.22 MMBtu/hr	Natural Gas		5.22	8,760.00	45,727.20	2,426.29	0.05	0.00	2,428.79
Mol Sieve Heater - Unit 48	Heaters	Mole Sieve Regeneration Heater, 7.68 MMBtu/hr	Natural Gas		7.68	8,760.00	67,276.80	3,569.71	0.07	0.01	3,573.39
Turbine - Unit 17	Turbines	GE Frame 5 Turbine	Natural Gas	19,500	204.20	8,760.00	1,788,792.00	94,913.30	1.79	0.18	95,011.33
Turbine - Unit 18	Turbines	GE Frame 5 Turbine	Natural Gas	19,500	201.90	8,760.00	1,768,644.00	93,844.25	1.77	0.18	93,941.17
Turbine - Unit 35	Turbines	Solar Mars Turbine	Natural Gas	15,000	116.00	8,760.00	1,016,160.00	53,917.45	1.02	0.10	53,973.14
Turbine - Unit 36	Turbines	Solar Mars Turbine	Natural Gas	15,000	116.00	8,760.00	1,016,160.00	53,917.45	1.02	0.10	53,973.14
Turbine - Unit 37	Turbines	Solar Mars Turbine	Natural Gas	15,000	116.00	8,760.00	1,016,160.00	53,917.45	1.02	0.10	53,973.14
Turbine - Unit 49	Turbines	Solar Mars Turbine	Natural Gas	6,039	47.30	8,760.00	414,348.00	21,985.30	0.41	0.04	22,008.01
								CO2e Metric Tonnes			
Engine - Unit 08	Engines	Compressor Engine, Caterpillar 4SLB						12,782.15	6.02	7.18	12,795.36
Engine - Unit 11	Engines	Compressor Engine, Caterpillar 4SLB						12,782.15	6.02	7.18	12,795.36
Engine - Unit 12	Engines	Compressor Engine, Clark 2SLB						12,503.27	5.89	7.02	12,516.18
Engine - Unit 13	Engines	Compressor Engine, Clark 2SLB						12,503.27	5.89	7.02	12,516.18
Engine - Unit 14	Engines	Compressor Engine, Clark 2SLB						12,503.27	5.89	7.02	12,516.18
Engine - Unit 30	Engines	Air compressor engine, Diesel, 450 hp						92.06	0.04	0.05	92.15
Engine - Unit 32	Engines	Compressor Engine, Caterpillar 4SLB						6,739.68	3.18	3.79	6,746.64
Engine - Unit 33	Engines	Compressor Engine, Caterpillar 4SLB						6,739.68	3.18	3.79	6,746.64
Engine - Unit 34	Engines	Compressor Engine, Caterpillar 4SLB						6,739.68	3.18	3.79	6,746.64
Engine - Unit 50	Engines	Compressor Engine, Caterpillar 4SLB						10,458.13	4.93	5.87	10,468.93
Glycol Dehydrator Regen Heaters	Heaters	Glycol Dehydrator Regen Heater, 5.22 MMBtu/hr						2,426.29	1.14	1.36	2,428.79
Mol Sieve Heater - Unit 48	Heaters	Mole Sieve Regeneration Heater, 7.68 MMBtu/hr						3,569.71	1.68	2.00	3,573.39
Turbine - Unit 17	Turbines	GE Frame 5 Turbine						94,913.30	44.72	53.31	95,011.33
Turbine - Unit 18	Turbines	GE Frame 5 Turbine						93,844.25	44.22	52.71	93,941.17
Turbine - Unit 35	Turbines	Solar Mars Turbine						53,917.45	25.40	30.28	53,973.14
Turbine - Unit 36	Turbines	Solar Mars Turbine						53,917.45	25.40	30.28	53,973.14
Turbine - Unit 37	Turbines	Solar Mars Turbine						53,917.45	25.40	30.28	53,973.14
Turbine - Unit 49	Turbines	Solar Mars Turbine						21,985.30	10.36	12.35	22,008.01
Entity Total										**Total MT CO2e**	472,822.37

Section 7

Information Used To Determine Emissions

Information Used to Determine Emissions shall include the following:

- ☑ If manufacturer data are used, include specifications for emissions units and control equipment, including control efficiencies specifications and sufficient engineering data for verification of control equipment operation, including design drawings, test reports, and design parameters that affect normal operation.
- ☑ If test data are used, include a copy of the complete test report. If the test data are for an emissions unit other than the one being permitted, the emission units must be identical. Test data may not be used if any difference in operating conditions of the unit being permitted and the unit represented in the test report significantly effect emission rates.
- ☑ If the most current copy of AP-42 is used, reference the section and date located at the bottom of the page. Include a copy of the page containing the emissions factors, and clearly mark the factors used in the calculations.
- ☐ If an older version of AP-42 is used, include a complete copy of the section.
- ☑ If an EPA document or other material is referenced, include a complete copy.
- ☐ Fuel specifications sheet.
- ☑ If computer models are used to estimate emissions, include an input summary (if available) and a detailed report, and a disk containing the input file(s) used to run the model. For tank-flashing emissions, include a discussion of the method used to estimate tank-flashing emissions, relative thresholds (i.e., permit or major source (NSPS, PSD or Title V)), accuracy of the model, the input and output from simulation models and software, all calculations, documentation of any assumptions used, descriptions of sampling methods and conditions, copies of any lab sample analysis.

The following items were used to calculate emission estimates:

Units 8, 11
- Engine Manufacturer Data
- Catalyst Manufacturer Data
- GRI-HAPCalc

Units 12-14
- Test Data
- GRI-HAPCalc

Units 17, 18
- Test Data
- GRI-HAPCalc
-

Unit 30
- AP-42 Table 3.3-1 (10/1996)
- GRI-HAPCalc

Units 32-34
- Engine Manufacturer Data
- Catalyst Manufacturer Data
- GRI-HAPCalc

Units 35-37
- Manufacturer Data
- GRI-HAPCalc

Units 42, 43
- Gas Analysis, dated 3/2/2010
- TRNCC RG-109 (October 2010)

Unit 44
- Gas Analysis, dated 3/2/2010
- TRNCC RG-109 (October 2010)

Unit 46
- Manufacturer Data

Unit 48
- Manufacturer Data
- AP-42 Tables 1.4-1 and 1.4-2 (7/1998)
- GRI-HAPCalc

Unit 49
- Manufacturer Data
- GRI-HAPCalc

Unit 50
- Engine Manufacturer Data
- Catalyst Manufacturer Data
- GRI-HAPCalc

Unit 51a
- AP-42 Tables 1.4-1 and 1.4-2 (7/1998)
- GRI-HAPCalc

TK28, TK29
- Condenser Liquid Tanks 4.0 Output
- Separator Liquids Tanks 4.0 Output
- GLYCalc Aggregate Report with stream analyses

Fugitives (F-001 to F-009)
- Gas Analyses
- *1995 Protocol for Equipment Leak Emission Estimates* (EPA-453/R-95-017) Table 2-4
- GRI-HAPCalc Manual Table 4-6

CT-B, CT-C
- AP-42 Section 13.4 (1/1995)
- *Effects of Pathogenic and Toxic Materials Transported Via Cooling Device Drift*, Volume 1 (EPA-600/7-79-251a). November 1979

TRUCK
- AP-42 Section 5.2 (6/2008)

Supporting Information: Units 8 & 11

CATERPILLAR

Interoffice Memorandum

Facility	88
Date	May 8, 1995
Plant/ Office	LEC
Department	Gas Engine Product
Attention	Walt E. Earleson

Plant Or Office	Department	Attention	
Destroy	File Until (Date)		

Subject : El Paso / Mustang / Chaco G3616 Gas Compression Engine

The approved G3616 industrial engine rating is listed below. In addition the turndown power and speed are listed for the given site conditions. The emission ratings are based on the attached fuel composition.

Engine	G3616
C/R	9.2:1
Speed (rpm)	1000
Continuous Rating (bhp)	4175
SCAC Water Inlet	130F.
Jacket Water Outlet	190F
Altitude (ft)	< 6023
Max Ambient Temp	95F
Fuel Methane #	81.7
Turndown Speed (rpm)	825
Turndown Power (bhp)	3445

Load		100%	75%	50%	25%
NOx as NO2	(g/bhp-hr)	0.70	0.70	0.70	1.90
CO	(g/bhp-hr)	1.90	1.90	1.90	2.78
HC total	(g/bhp-hr)	5.98	6.07	6.14	5.51
NMNEHC	(g/bhp-hr)	0.50	0.51	0.52	0.50

Please let me know if there are any other questions.

Robert D. Schueffner Robert D. Schueffner
R.D. Nevinger Ron Nevinger (by MGB)
Gas Engine Product
Large Engine Center
88-A24D, ext 5752

01-089472-01 PC

G3616 SITA — 9:1 Industrial Performance

		100%	75%	50%	25%
Aspiration		TA	TA	TA	TA
Speed	rpm	900	900	900	900
JW / Outlet Temperature (°F)		190	190	190	190
A/C / Inlet Temperature (°F)		130	130	130	130
Engine Power	bhp	4000	3000	2000	1000
NOx (as NO_2)	g/bhp-hr	0.70	0.70	0.70	1.75
CO	g/bhp-hr	1.90	1.90	1.90	2.62
HC (Total)	g/bhp-hr	5.28	5.45	5.50	3.71
HC (Non-Methane)	g/bhp-hr	0.8	0.8	0.8	0.6
Exhaust Oxygen	% (dry)	11.9	11.7	11.3	9.3
BSFC	Btu/hp-hr nominal	6590	6805	7265	9750
Compressor Out Pressure	in. Hg abs	88.8	52.2	38.3	33.3
Compressor Out Temperature (°F)		290	233	168	141
Intake Manifold Pressure	in. Hg abs	66.8	50.2	38.3	23.1
Intake Manifold Temperature (°F)		148	145	141	138
Air-Fuel Ratio	vol/vol	20.10	18.90	16.60	14.90
Timing	°BTDC	22	22	22	22
Input Energy (LHV)	Btu/min ±5%	439,333	340,250	242,167	162,500
Work	Btu/min ±3%	169,680	127,260	84,840	42,420
Exhaust (LHV)	Btu/min ±10%	162,148	130,123	91,593	57,719
Exhaust (to 350°F)	Btu/min ±10%	96,071	77,715	54,333	37,442
Aftercooler	Btu/min ±5%	26,126	12,623	2,738	294
Radiation	Btu/min ±25%	18,891	18,033	17,678	18,687
Oil Cooler	Btu/min ±20%	18,500	17,202	17,680	18,050
Jacket Water	Btu/min ±10%	43,990	35,009	27,637	25,329
Air Flow	lb/hr	44,550	34,159	22,724	12,215
Air Flow (scfm @ 77°F, 13.9 psia)		10,612	8,137	5,413	2,910
Exhaust Flow	lb/hr	45,893	35,200	23,464	12,712
Exhaust Flow (cfm @ stack T, 14.5 psia)		25,278	19,765	13,397	7,961
Exhaust Stack Temp (°F)		825	850	872	1,001
Fuel Flow (scfh @ 60°F, 14.7 psia)		29,127	22,558	16,055	10,773

Aftercooler Heat Rejection Factors

G3616 Industrial – 130°F SCAC

750–1000 rpm

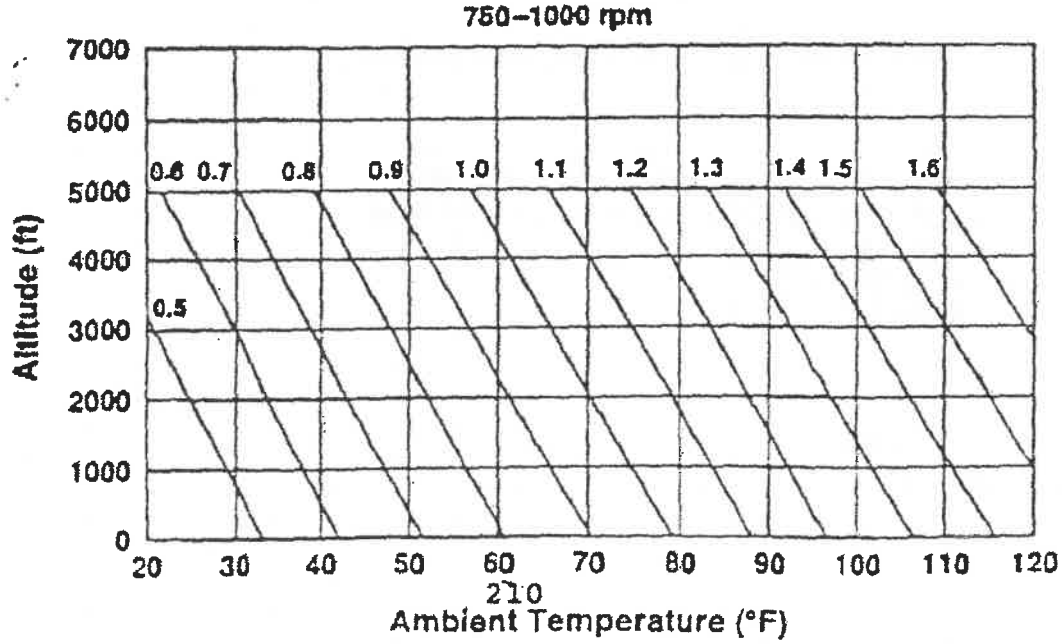

Houston Industrial Silencing

EMISSIONS REDUCTION SYSTEMS DIVISION

FAX TRANSMITTAL

DATE: June 2, 1995 FAX #: 915-541-5946

TO: Dick Sumner

COMPANY: El Paso Natural Gas

FROM: Harold L. Harris

REFERENCE: Chaco Station / CAT 3616TA rated 4445HP at 1000RPM

Total No. of pages, including this one: 2

****

Dear Dick:

The DeNOx Silencer in Oxidation Service, Model DeCOEx-44C28PC will provide the following performance:

CO production of 1.9 gm/hp/hr reduced to 0.19 gm/hp/hr

NMHC production (VOC) of 0.5 gm/hp/hr reduced to 0.1750 gm/hp/hr based on fuel gas analysis submitted

Conversion efficiency will begin at about 95% with the new catalyst and with time will accumulate products of combustion such as sulphated ash (recommend engine lube oil contain less than 0.5% volume ash content) to mask the catalyst surface and reduce efficiency. Reduction efficiency should not go above the stated 0.1750 gms/hp/hr for VOC unless an engine malfunction occurs or excessive oil usage is experienced. Annual cleaning is recommended or at least an annual inspection is recommended.

The DeNOx Silencer in oxidation service will provide "commercial" quality silencing, and HIS will warrant the performance for a period of three (3) years for start-up date, provided the catalyst module is free flowing by periodic cleaning. Materials used in, and workmanship on, the DeNOx Silencer are also warranted for three (3) years.

All catalyst applications for the DeNOx Silencer are designed in compliance with local, state and federal regulatory levels. They are also in accordance with EPA and OSHA guidelines.

9744 Whithorn Drive • Houston, Texas 77095 • 713-463-8883 • Fax 713-463-8861

The catalyst substrate is made of stainless steel with chevron-shaped corrugations which form the cell structure of the module. The catalyst module is strategically located near the mid-section where the sealing and mechanical support structure provides a large safety factor against engine backfire.

Sincerely,

HOUSTON INDUSTRIAL SILENCING
Emissions Reduction Systems Division

Harold L. Harris
President

HLH:dmz

Fluoranthene	0.0001	0.0000037000 g/bhp-hr	EPA
Pyrene	0.0001	0.0000045000 g/bhp-hr	EPA
Chrysene	0.0001	0.0000023000 g/bhp-hr	EPA
Benzo(b)fluoranthene	0.0000	0.0000005000 g/bhp-hr	EPA
Benzo(e)pyrene	0.0000	0.0000014000 g/bhp-hr	EPA
Benzo(g,h,i)perylene	0.0000	0.0000014000 g/bhp-hr	EPA
Vinyl Chloride	0.0016	0.0000492000 g/bhp-hr	EPA
Methylene Chloride	0.0021	0.0000660000 g/bhp-hr	EPA
1,1-Dichloroethane	0.0025	0.0000779000 g/bhp-hr	EPA
1,3-Dichloropropene	0.0028	0.0000871000 g/bhp-hr	EPA
Chlorobenzene	0.0032	0.0001003000 g/bhp-hr	EPA
Chloroform	0.0030	0.0000941000 g/bhp-hr	EPA
1,1,2-Trichloroethane	0.0034	0.0001050000 g/bhp-hr	EPA
1,1,2,2-Tetrachloroethane	0.0042	0.0001320000 g/bhp-hr	EPA
Carbon Tetrachloride	0.0039	0.0001211000 g/bhp-hr	EPA
Total HAPs:	7.6659		

Criteria Pollutants

PM	1.0605	0.0329609000 g/bhp-hr	EPA
CO	33.6614	1.0462086000 g/bhp-hr	EPA
NMEHC	12.5301	0.3894404000 g/bhp-hr	EPA
NOx	433.2447	13.4653981000 g/bhp-hr	EPA
SO2	0.0624	0.0019406000 g/bhp-hr	EPA

Other Pollutants

Butryaldehyde	0.0107	0.0003333000 g/bhp-hr	EPA
Chloroethane	0.0002	0.0000062000 g/bhp-hr	EPA
Methane	132.7343	4.1254283000 g/bhp-hr	EPA
Ethane	11.1497	0.3465360000 g/bhp-hr	EPA
Propane	4.4493	0.1382844000 g/bhp-hr	EPA
Butane	0.0574	0.0017855000 g/bhp-hr	EPA
Cyclopentane	0.0241	0.0007492000 g/bhp-hr	EPA
n-Pentane	0.2761	0.0085809000 g/bhp-hr	EPA
Methylcyclohexane	0.1306	0.0040594000 g/bhp-hr	EPA
1,2-Dichloroethane	0.0025	0.0000779000 g/bhp-hr	EPA
1,2-Dichloropropane	0.0029	0.0000888000 g/bhp-hr	EPA
n-Octane	0.0373	0.0011584000 g/bhp-hr	EPA
1,2,3-Trimethylbenzene	0.0024	0.0000759000 g/bhp-hr	EPA
1,2,4-Trimethylbenzene	0.0015	0.0000472000 g/bhp-hr	EPA
1,3,5-Trimethylbenzene	0.0036	0.0001116000 g/bhp-hr	EPA
n-Nonane	0.0117	0.0003630000 g/bhp-hr	EPA
CO2	11,680.6178	363.0376935000 g/bhp-hr	EPA

Unit Number:	8, 11
Hours of Operation:	8,760 Yearly
Rated Horsepower:	4,176 hp
Fuel Type:	NATURAL GAS
Engine Type:	4-Stroke, Rich Burn
Emission Factor Set:	FIELD > EPA > LITERATURE
Additional EF Set:	-NONE-

Calculated Emissions

Chemical Name	Emissions (ton/yr)	Emission Factor	EF Set
HAPs			
Formaldehyde	4.0058	0.0994289000 g/bhp-hr	GRI Field
Methanol	0.8058	0.0200000000 g/bhp-hr	GRI Field
Acetaldehyde	0.3710	0.0092080000 g/bhp-hr	EPA
1,3-Butadiene	0.0882	0.0021881000 g/bhp-hr	EPA
Acrolein	0.3497	0.0086799000 g/bhp-hr	EPA
Benzene	0.2101	0.0052145000 g/bhp-hr	EPA
Toluene	0.0742	0.0018416000 g/bhp-hr	EPA
Ethylbenzene	0.0033	0.0000818000 g/bhp-hr	EPA
Xylenes(m,p,o)	0.0259	0.0006436000 g/bhp-hr	EPA
Styrene	0.0016	0.0000393000 g/bhp-hr	EPA
Naphthalene	0.0129	0.0003205000 g/bhp-hr	EPA
Ethylene Dibromide	0.0028	0.0000703000 g/bhp-hr	EPA
Vinyl Chloride	0.0010	0.0000237000 g/bhp-hr	EPA
Methylene Chloride	0.0055	0.0001360000 g/bhp-hr	EPA
1,1-Dichloroethane	0.0015	0.0000373000 g/bhp-hr	EPA
1,3-Dichloropropene	0.0017	0.0000419000 g/bhp-hr	EPA
Chlorobenzene	0.0017	0.0000426000 g/bhp-hr	EPA
Chloroform	0.0018	0.0000452000 g/bhp-hr	EPA
1,1,2-Trichloroethane	0.0020	0.0000505000 g/bhp-hr	EPA
1,1,2,2-Tetrachloroethane	0.0034	0.0000835000 g/bhp-hr	EPA
Carbon Tetrachloride	0.0024	0.0000584000 g/bhp-hr	EPA
Total HAPs:	5.9722		
Criteria Pollutants			
PM	2.5809	0.0640597000 g/bhp-hr	EPA
CO	584.1801	14.5000000000 g/bhp-hr	GRI Field
NMEHC	3.9358	0.0976901000 g/bhp-hr	EPA
NOx	737.2756	18.3000000000 g/bhp-hr	GRI Field
SO2	0.0782	0.0019406000 g/bhp-hr	EPA
Other Pollutants			
Butryaldehyde	0.0065	0.0001604000 g/bhp-hr	EPA
Methane	30.5820	0.7590788000 g/bhp-hr	EPA
Ethane	9.3607	0.2323441000 g/bhp-hr	EPA
1,2-Dichloroethane	0.0015	0.0000373000 g/bhp-hr	EPA
1,2-Dichloropropane	0.0017	0.0000429000 g/bhp-hr	EPA
CO2	14,626.1649	363.0376935000 g/bhp-hr	EPA

Supporting Information: Units 12, 13, & 14

Summary of Results
Unit B-1

Company: El Paso Natural Gas (EPNG)
Plant: Chaco Gas Plant B
Location: Near Bloomfield, New Mexico
Source: Clark TLA-10
Compressor Engine (Engine #B-1)
Technicians: RJK, JHC

Test Run No.	C-39	C-40	C-41	C-42
Date	4/18/95	4/18/95	4/18/95	4/18/95
Start Time	13:08	14:30	15:45	17:30
Stop Time	14:20	15:30	16:45	18:30
Engine/Compressor Operation				
Engine Speed (rpm)	303	301	301	300
Ignition Timing (°BTDC)	9	9	9	9
Air Manifold Pressure ("Hg)	16.2	16.2	16.1	15.9
Air Manifold Temperature (°F)	106	108	105	105
Fuel Static Pressure (psig)	31.4	32	31.6	32
Fuel Diff. Pressure ("H2O)	37	37.5	37.7	32.2
Fuel Temp. (°F)	58.2	56.7	55.7	51
Fuel Manifold Press. (psig)	21.1	21.5	21.4	19.2
Fuel Flow (SCFH)	24454	24787	24789	23122
Turbo Inlet Temp. (°F)	58	58	54	51
Compressor Load Step	10	10	10	13
Station Suction Pressure (psig)	350.8	366.9	367	360
Station Suction Temp. (°F)	93	94	93	89
Station Discharge Pressure (psig)	828.1	826.2	830	844.9
Station Discharge Temp. (°F)	205	202	204	201
Torque (%)	90.2	91	91.3	78.5
Engine Load (BHP)	3064.6	3095.3	3104.8	2670.5
Brake Specific Fuel Consumption (BTU/Hp-hr)HHV	8538	8569	8543	9264
Brake Specific Fuel Consumption (BTU/Hp-hr)LHV	7684	7712	7689	8338
Ambient Conditions				
Temperature (°F wet)	42	42	42	41
Temperature (°F dry)	45	45	43	44
Barometer (in. Hg)	23.94	23.91	23.90	23.89
Humidity (lbs/lb of air)	0.0063	0.0063	0.0068	0.0060
Measured Emissions				
NOx (ppmv)	875.0	900.0	869.0	447.0
CO (ppmv)	205	214	212	218.3
O2 (%)	14.6	14.7	14.8	15.6
CO2 (%)	3.31	3.36	3.36	2.92
Fo	1.91	1.85	1.81	1.81
THC via EPA Method 25a (ppmv as Methane, dry)	886	898	861	1949
VOC via Fuel Analysis (ppmv as Methane, dry)	25.3	25.7	24.6	55.7
C1 & C2 via EPA Method 18 (ppmv as Methane, dry)	805	813	825	1894
VOC: non-C1 & C2 THC (ppmv as Methane, dry)	81	85	36	55
Stack Volumetric Flow Rates				
via Pitot Tube (SCFH, dry)	7.70E+05	7.60E+05	7.64E+05	7.50E+05
via O2 F-Factor (SCFH, dry)	7.49E+05	7.74E+05	7.88E+05	8.46E+05
via CO2 F-Factor (SCFH, dry)	8.23E+05	8.22E+05	8.22E+05	8.82E+05
Calculated Emission Rates (via Pitot Tube)				
NOx (lbs/hr)	80.5	81.7	79.3	40.0
CO (lbs/hr)	11.5	11.8	11.8	11.9
THC (lbs/hr)	28.4	28.4	27.4	60.8
VOC (lbs/hr) fuel analysis	0.81	0.81	0.78	1.74
VOC (lbs/hr) non-C1 & C2 THC	2.59	2.69	1.14	1.71
NOx (g/hp-hr)	11.92	11.99	11.60	6.81
CO (g/hp-hr)	1.70	1.74	1.72	2.02
THC (g/hp-hr)	4.20	4.16	4.00	10.33
VOC (g/hp-hr) fuel analysis	0.12	0.12	0.11	0.30
VOC (g/hp-hr) non-C1 & C2 THC	0.38	0.39	0.17	0.29

Summary of Results
Unit B-2

Company: El Paso Natural Gas (EPNG)
Plant: Chaco Gas Plant B
Location: Near Bloomfield, New Mexico
Source: Clark TLA-10
Compressor Engine (Engine #B-2)
Technicians: RJK, JHC

Test Run No.	C-43	C-44	C-45	C-46
Date	4/18/95	4/18/95	4/18/95	4/19/95
Start Time	19:28	20:48	22:00	08:00
Stop Time	20:28	21:48	23:00	09:00
Engine/Compressor Operation				
Engine Speed (rpm)	300	301	301	301
Ignition Timing (°BTDC)	9	9	9	9
Air Manifold Pressure ("Hg)	16	16.1	16	16.1
Air Manifold Temperature (°F)	103	104	104	103
Fuel Static Pressure (psig)	31.4	32	32	32
Fuel Diff. Pressure ("H2O)	36.8	37.2	37.3	29.6
Fuel Temp. (°F)	50.4	52.1	53	55
Fuel Manifold Press. (psig)	19.5	19.6	19.6	17.1
Fuel Flow (SCFH)	24551	24808	24785	22024
Turbo Inlet Temp. (°F)	49	48	49	49
Compressor Load Step	10	10	10	14
Station Suction Pressure (psig)	362	361	351.8	363
Station Suction Temp. (°F)	90	89	90	85
Station Discharge Pressure (psig)	824	832	827.2	834
Station Discharge Temp. (°F)	203	201	202	193.
Torque (%)	94	92	92	75
Engine Load (BHP)	3206	3153.6	3131	2573
Brake Specific Fuel Consumption (BTU/Hp-hr)HHV	8194	8417	8470	9167
Brake Specific Fuel Consumption (BTU/Hp-hr)LHV	7374	7576	7623	8251
Ambient Conditions				
Temperature (°F wet)	38.5	37	37	35
Temperature (°F dry)	40	38.5	38.3	36
Barometer (in. Hg)	23.89	23.89	23.88	23.80
Humidity (lbs/lb of air)	0.0058	0.0054	0.0055	0.0051
Measured Emissions				
NOx (ppmv)	868.0	906.0	911.0	293.0
CO (ppmv)	256	235.4	266.7	259.5
O2 (%)	14.6	14.6	14.6	15.4
CO2 (%)	3.42	3.51	3.47	3.02
Fo	1.85	1.81	1.83	1.81
THC via EPA Method 25a (ppmv as Methane, dry)	734	739	730	1785
VOC via Fuel Analysis (ppmv as Methane, dry)	21.0	21.1	20.9	51.1
C1 & C2 via EPA Method 18 (ppmv as Methane, dry)	705	666	623	1639
VOC: non-C1 & C2 THC (ppmv as Methane, dry)	29	73	107	146
Stack Volumetric Flow Rates				
via Pitot Tube (SCFH, dry)	7.49E+05	7.53E+05	7.53E+05	8.08E+05
via O2 F-Factor (SCFH, dry)	7.51E+05	7.57E+05	7.56E+05	7.81E+05
via CO2 F-Factor (SCFH, dry)	8.00E+05	7.87E+05	7.96E+05	8.13E+05
Calculated Emission Rates (via Pitot Tube)				
NOx (lbs/hr)	77.6	81.4	81.9	28.3
CO (lbs/hr)	13.9	12.9	14.6	15.2
THC (lbs/hr)	22.8	23.1	22.8	60.0
VOC (lbs/hr) fuel analysis	0.65	0.66	0.65	1.72
VOC (lbs/hr) non-C1 & C2 THC	0.90	2.28	3.35	4.90
NOx (g/hp-hr)	10.99	11.73	11.88	4.99
CO (g/hp/hr)	1.97	1.85	2.12	2.69
THC (g/hp/hr)	3.23	3.33	3.31	10.58
VOC (g/hp-hr)	0.09	0.10	0.09	0.30
VOC (g/hp-hr) non-C1 & C2 THC	0.13	0.33	0.49	0.87

Summary of Results
Unit B-3

Company: El Paso Natural Gas (EPNG)
Plant: Chaco Gas Plant B
Location: Near Bloomfield, New Mexico
Source: Clark TLA-10
Compressor Engine (Engine #B-3)
Technicians: RJK, JHC

Test Run No.	C-47	C-48	C-49	C-50
Date	4/19/95	4/19/95	4/19/95	4/19/95
Start Time	10:04	11:16	12:25	13:50
Stop Time	11:04	12:16	13:25	14:50
Engine/Compressor Operation				
Engine Speed (rpm)	298	296	296	297
Ignition Timing (°BTDC)	9	9	9	9
Air Manifold Pressure ("Hg)	15.8	16	16	16
Air Manifold Temperature (°F)	99	100	99	101
Fuel Static Pressure (psig)	32	32	32	32
Fuel Diff. Pressure ("H2O)	37	37	37	31.6
Fuel Temp. (°F)	62.3	64	64.4	67.6
Fuel Manifold Press. (psig)	24.9	25.1	24.9	22.5
Fuel Flow (SCFH)	24518	24425	24434	22488
Turbo Inlet Temp. (°F)	44	48	49	56
Compressor Load Step	10	10	10	14
Station Suction Pressure (psig)	352.9	354.5	367	328.2
Station Suction Temp. (°F)	83	90	86	96
Station Discharge Pressure (psig)	828.9	826.2	835.6	810.9
Station Discharge Temp. (°F)	200	200	201	206.3
Torque (%)	89	89	89	74
Engine Load (BHP)	3041.9	3030.5	3025.1	2535.9
Brake Specific Fuel Consumption (BTU/Hp-hr)HHV	8632	8632	8651	9497
Brake Specific Fuel Consumption (BTU/Hp-hr)LHV	7769	7769	7786	8548
Ambient Conditions				
Temperature (°F wet)	38	38	41	43
Temperature (°F dry)	39	39	43	45
Barometer (in. Hg)	23.77	23.78	23.79	23.80
Humidity (lbs/lb of air)	0.0058	0.0058	0.0063	0.0068
Measured Emissions				
NOx (ppmv)	1012	1055.0	1032.0	615.0
CO (ppmv)	227.3	236.7	244.3	284.5
O2 (%)	14.5	14.5	14.5	15.3
CO2 (%)	3.50	3.50	3.49	3.09
Fo	1.82	1.82	1.83	1.81
THC via EPA Method 25a (ppmv as Methane, dry)	1012	1051	1055	2500
VOC via Fuel Analysis (ppmv as Methane, dry)	28.9	30.1	30.2	71.5
C1 & C2 via EPA Method 18 (ppmv as Methane, dry)	960	981	1004	2293
VOC: non-C1 & C2 THC (ppmv as Methane, dry)	52	70	51	207
Stack Volumetric Flow Rates				
via Pitot Tube (SCFH, dry)	7.27E+05	7.39E+05	7.65E+05	8.03E+05
via O2 F-Factor (SCFH, dry)	7.46E+05	7.43E+05	7.41E+05	7.79E+05
via CO2 F-Factor (SCFH, dry)	7.81E+05	7.78E+05	7.81E+05	8.11E+05
Calculated Emission Rates (via Pitot Tube)				
NOx (lbs/hr)	87.8	93.2	94.3	59.0
CO (lbs/hr)	12.0	12.7	13.6	16.6
THC (lbs/hr)	30.6	32.3	33.5	83.5
VOC (lbs/hr) fuel analysis	0.87	0.92	0.96	2.39
VOC (lbs/hr) non-C1 & C2 THC	1.57	2.15	1.61	6.91
NOx (g/hp-hr)	13.11	13.96	14.15	10.57
CO (g/hp/hr)	1.79	1.91	2.04	2.97
THC (g/hp/hr)	4.56	4.84	5.03	14.94
VOC (g/hp-hr) fuel analysis	0.13	0.14	0.14	0.43
VOC (g/hp-hr) non-C1 & C2 THC	0.23	0.32	0.24	1.24

Engine Units

Unit Number:	12-14
Hours of Operation:	8,760 Yearly
Rated Horsepower:	3,194 hp
Fuel Type:	NATURAL GAS
Engine Type:	2-Stroke, Lean Burn
Emission Factor Set:	FIELD > EPA > LITERATURE
Additional EF Set:	2SLB CLARK

Calculated Emissions

Chemical Name	Emissions (ton/yr)	Emission Factor	EF Set
HAPs			
Formaldehyde	6.9234	0.2246805150 g/bhp-hr	2SLB CLARK
Methanol	0.4391	0.0142496430 g/bhp-hr	2SLB CLARK
Acetaldehyde	0.7283	0.0236340480 g/bhp-hr	2SLB CLARK
1,3-Butadiene	0.0902	0.0029272730 g/bhp-hr	2SLB CLARK
Acrolein	0.3993	0.0129580700 g/bhp-hr	2SLB CLARK
Benzene	0.2118	0.0068736470 g/bhp-hr	2SLB CLARK
Toluene	0.2765	0.0089727270 g/bhp-hr	2SLB CLARK
Ethylbenzene	0.0071	0.0002300000 g/bhp-hr	2SLB CLARK
Xylenes(m,p,o)	0.3895	0.0126390000 g/bhp-hr	2SLB CLARK
2,2,4-Trimethylpentane	0.8517	0.0276400000 g/bhp-hr	2SLB CLARK
n-Hexane	0.4844	0.0157200000 g/bhp-hr	2SLB CLARK
Phenol	0.0108	0.0003500000 g/bhp-hr	2SLB CLARK
Styrene	0.7654	0.0248380000 g/bhp-hr	2SLB CLARK
Naphthalene	0.0173	0.0005600000 g/bhp-hr	2SLB CLARK
2-Methylnaphthalene	0.0080	0.0002600000 g/bhp-hr	2SLB CLARK
Acenaphthylene	0.0012	0.0000400000 g/bhp-hr	2SLB CLARK
Biphenyl	0.0009	0.0000300000 g/bhp-hr	2SLB CLARK
Acenaphthene	0.0005	0.0000170000 g/bhp-hr	2SLB CLARK
Fluorene	0.0007	0.0000240000 g/bhp-hr	2SLB CLARK
Anthracene	0.0003	0.0000096000 g/bhp-hr	2SLB CLARK
Phenanthrene	0.0014	0.0000460000 g/bhp-hr	2SLB CLARK
Ethylene Dibromide	0.0075	0.0002422000 g/bhp-hr	EPA
Fluoranthene	0.0001	0.0000032000 g/bhp-hr	2SLB CLARK
Pyrene	0.0002	0.0000061000 g/bhp-hr	2SLB CLARK
Benz(a)anthracene	0.0001	0.0000043000 g/bhp-hr	2SLB CLARK
Chrysene	0.0002	0.0000076000 g/bhp-hr	2SLB CLARK
Benzo(e)pyrene	0.0000	0.0000001000 g/bhp-hr	EPA
Vinyl Chloride	0.0025	0.0000815000 g/bhp-hr	EPA
Methylene Chloride	0.0150	0.0004852000 g/bhp-hr	EPA
1,1-Dichloroethane	0.0040	0.0001290000 g/bhp-hr	EPA
1,3-Dichloropropene	0.0045	0.0001446000 g/bhp-hr	EPA
Chlorobenzene	0.0045	0.0001465000 g/bhp-hr	EPA
Chloroform	0.0048	0.0001554000 g/bhp-hr	EPA
1,1,2-Trichloroethane	0.0054	0.0001739000 g/bhp-hr	EPA
1,1,2,2-Tetrachloroethane	0.0067	0.0002188000 g/bhp-hr	EPA
Carbon Tetrachloride	0.0062	0.0002003000 g/bhp-hr	EPA

Propanal	0.1294	0.0042000000 g/bhp-hr	2SLB CLARK
Total HAPs:	11.7988		

Criteria Pollutants

PM	4.9130	0.1594396000 g/bhp-hr	EPA
CO	36.1438	1.1729521800 g/bhp-hr	2SLB CLARK
NMHC	66.3279	2.1525000000 g/bhp-hr	2SLB CLARK
NMEHC	59.3176	1.9250000000 g/bhp-hr	2SLB CLARK
NOx	405.9929	13.1754448460 g/bhp-hr	2SLB CLARK
SO2	0.0598	0.0019406000 g/bhp-hr	EPA

Other Pollutants

Cylclohexane	0.1989	0.0064550000 g/bhp-hr	GRI Field
Butryaldehyde	0.0444	0.0014422000 g/bhp-hr	EPA
Methane	102.1535	3.3151250730 g/bhp-hr	2SLB CLARK
Acetylene	0.0363	0.0011764710 g/bhp-hr	2SLB CLARK
Ethylene	1.3420	0.0435505920 g/bhp-hr	2SLB CLARK
Ethane	11.3550	0.3684960060 g/bhp-hr	2SLB CLARK
Propylene	0.8954	0.0290563990 g/bhp-hr	2SLB CLARK
Propane	4.0103	0.1301436150 g/bhp-hr	2SLB CLARK
Isobutane	0.3007	0.0097600000 g/bhp-hr	2SLB CLARK
Butane	0.3996	0.0129682810 g/bhp-hr	2SLB CLARK
Cyclopentane	0.3279	0.0106400000 g/bhp-hr	2SLB CLARK
Butyrald/Isobutyraldehyde	0.1313	0.0042600000 g/bhp-hr	2SLB CLARK
Pentane	1.9983	0.0648481100 g/bhp-hr	2SLB CLARK
n-Pentane	0.3556	0.0115400000 g/bhp-hr	2SLB CLARK
Cyclohexane	0.3808	0.0123563640 g/bhp-hr	2SLB CLARK
Methylcyclohexane	0.6330	0.0205420000 g/bhp-hr	2SLB CLARK
1,2-Dichloroethane	0.0043	0.0001393000 g/bhp-hr	EPA
1,2-Dichloropropane	0.0045	0.0001472000 g/bhp-hr	EPA
n-Octane	0.8451	0.0274240000 g/bhp-hr	2SLB CLARK
1,2,3-Trimethylbenzene	1.0045	0.0326000000 g/bhp-hr	2SLB CLARK
1,2,4-Trimethylbenzene	1.0065	0.0326620000 g/bhp-hr	2SLB CLARK
1,3,5-Trimethylbenzene	1.0045	0.0326000000 g/bhp-hr	2SLB CLARK
n-Nonane	1.0723	0.0348000000 g/bhp-hr	2SLB CLARK
CO2	11,186.7746	363.0376935000 g/bhp-hr	EPA

Unit Number:	32-34
Hours of Operation:	8,760 Yearly
Rated Horsepower:	2,087 hp
Fuel Type:	NATURAL GAS
Engine Type:	4-Stroke, Lean Burn
Emission Factor Set:	FIELD > EPA > LITERATURE
Additional EF Set:	-NONE-

Calculated Emissions

Chemical Name	Emissions (ton/yr)	Emission Factor	EF Set

Supporting Information: Units 17 & 18

Summary of Results
Unit C-1

Company: EL PASO NATURAL GAS	
Plant: Chaco Plant	
Location: Four Corners New Mexico	
Technicians: RJK, JHC	
Source: GE F#5 Unit C-1	
Test Number	**C-37**
Date:	4/17/95
Start Time	21:04
Stop Time	22:04
Turbine Operation	
Turbine Speed (RPM)	5095.0
% Load	69
BHP	13471
Available Hp	19500
Gas Compressor Suction Press. (psia)	133.2
Gas Compressor Suction Temp. (°F)	49.5
Gas Compressor Discharge Press. (psia)	232.4
Gas Compressor Discharge Temp. (°F)	128.4
Stack Temp. (°F)	766
Annubar Coefficient	0.6347
Fuel Heating Value (Btu/SCF-HHV)	1241
Fuel Specific Gravity	0.72904
Fuel Flow (SCF/hr)	137080
Fuel Flow (MMBtu/hr)	140.92
Plant C Fuel Flow (SCF/hr)	284302
Plant C Fuel Flow (MMBtu/hr)	292.26
Ambient Conditions	
Temperature (°F wet)	35
Temperature (°F dry)	38
Barometer (in. Hg)	23.98
Humidity (lbs/lb of air)	0.0046
Measured Emissions	
NOx (ppmv)	51.6
NOx (ppm @ 15% O2)	78.7
NOx (ppm @15% O2, ISO Day)	**90.6**
CO (ppmv)	4.4
CO (ppmv at 15% O2)	**6.7**
O2 (%)	17.03
CO2 (%)	2.29
THC (ppmvd as C1 by M-25a)	6.30
C1 & C2 (ppmvd as C1 by M-18)	5.56
VOC (ppmvd as C1)	0.74
VOC (ppmvd as C1 at 15% O2)	**1.1**
Stack Flow Rates (SCFH)	
O2 Stoichiometry	7.99E+06
Mass Emissions	
NOx (lbs/hr)	49.22
CO (lbs/hr)	2.56
THC (lbs/hr)	2.10
VOC (lbs/hr)	0.2462

Table 11:
Summary of Results
Unit C-2

Company: EL PASO NATURAL GAS
Plant: Chaco Plant
Location: Four Corners New Mexico
Technicians: RJK, JHC
Source: GE F#5 Unit C-2

Test Number	**C-38**
Date:	4/18/95
Start Time	9:20
Stop Time	10:20
Turbine Operation	
Turbine Speed (RPM)	5098.0
% Load	74
BHP	14422
Available Hp	19500
Gas Compressor Suction Press. (psig)	228.4
Gas Compressor Suction Temp. (°F)	130.1
Gas Compressor Discharge Press. (psi)	383.3
Gas Compressor Discharge Temp. (°F)	211.6
Stack Temp. (°F)	477
Annubar Coefficient	0.6347
Fuel Heating Value (Btu/SCF-HHV)	1245
Fuel Specific Gravity	0.73174
Turbine Fuel Flow (SCF/hr)	145312
Turbine Fuel Flow (MMBtu/hr)	149.38
Ambient Conditions	
Temperature (°F wet)	38
Temperature (°F dry)	39
Barometer (in. Hg)	24.00
Humidity (lbs/lb of air)	0.0057
Measured Emissions	
NOx (ppmv)	69.5
NOx (ppm @ 15% O2)	93.4
NOx (ppm @15% O2, ISO Day)	**109.5**
CO (ppmv)	20.4
CO (ppmv at 15% O2)	**27.4**
O2 (%)	16.51
CO2 (%)	2.59
THC (ppmvd as C1 by M-25a)	15.20
C1 & C2 (ppmvd as C1 by M-18)	18.05
VOC (ppmvd as C1)	-2.85
VOC (ppmvd as C1 at 15% O2)	**-3.8**
Stack Flow Rates (SCFH)	
O2 Stoichiometry	7.49E+06
Mass Emissions	
NOx (lbs/hr)	62.16
CO (lbs/hr)	11.11
THC (lbs/hr)	4.74
VOC (lbs/hr)	-0.8888

Turbine Units

Unit Number: 17, 18
Hours of Operation: 8,760 Yearly
Rated Horsepower: 16,200 hp
Fuel Type: NATURAL GAS
Emission Factor Set: FIELD > EPA > LITERATURE
Additional EF Set: -NONE-

Calculated Emissions

Chemical Name	Emissions (ton/yr)	Emission Factor	EF Set
HAPs			
PAHs	0.0015	0.0000097000 g/bhp-hr	EPA
Formaldehyde	2.6471	0.0169368000 g/bhp-hr	GRI Field
Acetaldehyde	2.7094	0.0173357000 g/bhp-hr	GRI Field
1,3-Butadiene	0.0096	0.0000616000 g/bhp-hr	GRI Field
Acrolein	0.0406	0.0002600000 g/bhp-hr	GRI Field
Propional	0.1352	0.0008650000 g/bhp-hr	GRI Field
Propylene Oxide	0.0199	0.0001273000 g/bhp-hr	EPA
Benzene	0.0841	0.0005384000 g/bhp-hr	GRI Field
Toluene	0.0642	0.0004110000 g/bhp-hr	GRI Field
Ethylbenzene	0.0220	0.0001405000 g/bhp-hr	EPA
Xylenes(m,p,o)	0.1944	0.0012441000 g/bhp-hr	GRI Field
2,2,4-Trimethylpentane	0.2509	0.0016053000 g/bhp-hr	GRI Field
n-Hexane	0.2353	0.0015058000 g/bhp-hr	GRI Field
Phenol	0.0172	0.0001101000 g/bhp-hr	GRI Field
Naphthalene	0.0012	0.0000076000 g/bhp-hr	GRI Field
2-Methylnaphthalene	0.0002	0.0000013000 g/bhp-hr	GRI Field
Biphenyl	0.0517	0.0003305000 g/bhp-hr	GRI Field
Phenanthrene	0.0001	0.0000005000 g/bhp-hr	GRI Field
Chrysene	0.0002	0.0000010000 g/bhp-hr	GRI Field
Beryllium	0.0000	0.0000001000 g/bhp-hr	GRI Field
Phosphorus	0.0102	0.0000652000 g/bhp-hr	GRI Field
Chromium	0.0013	0.0000082000 g/bhp-hr	GRI Field
Manganese	0.0027	0.0000175000 g/bhp-hr	GRI Field
Nickel	0.0010	0.0000061000 g/bhp-hr	GRI Field
Cobalt	0.0003	0.0000016000 g/bhp-hr	GRI Field
Arsenic	0.0001	0.0000006000 g/bhp-hr	GRI Field
Selenium	0.0000	0.0000003000 g/bhp-hr	GRI Field
Cadmium	0.0000	0.0000002000 g/bhp-hr	GRI Field
Mercury	0.0004	0.0000027000 g/bhp-hr	GRI Field
Lead	0.0005	0.0000034000 g/bhp-hr	GRI Field
Total HAPs:	6.5014		
Criteria Pollutants			
PM	4.5281	0.0289720000 g/bhp-hr	EPA
CO	329.5053	2.1082842000 g/bhp-hr	GRI Field
NMHC	30.3013	0.1938780000 g/bhp-hr	GRI Field

NMEHC	1.4408	0.0092184000 g/bhp-hr	EPA
NOx	195.7015	1.2521629000 g/bhp-hr	GRI Field
SO2	0.1605	0.0010272000 g/bhp-hr	GRI Field
Other Pollutants			
Methane	154.2890	0.9871923000 g/bhp-hr	GRI Field
Acetylene	1.1199	0.0071654000 g/bhp-hr	GRI Field
Ethylene	2.1810	0.0139545000 g/bhp-hr	GRI Field
Ethane	23.4567	0.1500837000 g/bhp-hr	GRI Field
Propane	2.5007	0.0160000000 g/bhp-hr	GRI Field
Isobutane	0.7502	0.0048000000 g/bhp-hr	GRI Field
Butane	0.8127	0.0052000000 g/bhp-hr	GRI Field
Cyclopentane	0.2581	0.0016511000 g/bhp-hr	GRI Field
Butyrald/Isobutyraldehyde	0.2094	0.0013400000 g/bhp-hr	GRI Field
n-Pentane	12.6830	0.0811500000 g/bhp-hr	GRI Field
Cyclohexane	0.9571	0.0061240000 g/bhp-hr	GRI Field
Methylcyclohexane	1.3802	0.0088312000 g/bhp-hr	GRI Field
n-Octane	0.4984	0.0031889000 g/bhp-hr	GRI Field
1,3,5-Trimethylbenzene	0.4689	0.0030000000 g/bhp-hr	GRI Field
n-Nonane	0.0832	0.0005326000 g/bhp-hr	GRI Field
CO2	75,467.5009	482.8660778000 g/bhp-hr	EPA
Vanadium	0.0001	0.0000007000 g/bhp-hr	GRI Field
Copper	0.0032	0.0000205000 g/bhp-hr	GRI Field
Molybdenum	0.0032	0.0000203000 g/bhp-hr	GRI Field
Barium	0.0036	0.0000229000 g/bhp-hr	GRI Field

Unit Number: 35-37
Hours of Operation: 8,760 Yearly
Rated Horsepower: 11,818 hp
Fuel Type: NATURAL GAS
Emission Factor Set: FIELD > EPA > LITERATURE
Additional EF Set: -NONE-

Calculated Emissions

Chemical Name	Emissions (ton/yr)	Emission Factor	EF Set
HAPs			
PAHs	0.0011	0.0000097000 g/bhp-hr	EPA
Formaldehyde	1.9311	0.0169368000 g/bhp-hr	GRI Field
Acetaldehyde	1.9765	0.0173357000 g/bhp-hr	GRI Field
1,3-Butadiene	0.0070	0.0000616000 g/bhp-hr	GRI Field
Acrolein	0.0296	0.0002600000 g/bhp-hr	GRI Field
Propional	0.0986	0.0008650000 g/bhp-hr	GRI Field
Propylene Oxide	0.0145	0.0001273000 g/bhp-hr	EPA
Benzene	0.0614	0.0005384000 g/bhp-hr	GRI Field
Toluene	0.0469	0.0004110000 g/bhp-hr	GRI Field
Ethylbenzene	0.0160	0.0001405000 g/bhp-hr	EPA
Xylenes(m,p,o)	0.1418	0.0012441000 g/bhp-hr	GRI Field
2,2,4-Trimethylpentane	0.1830	0.0016053000 g/bhp-hr	GRI Field

Supporting Information: Unit 30

Table 3.3-1. EMISSION FACTORS FOR UNCONTROLLED GASOLINE AND DIESEL INDUSTRIAL ENGINES[a]

Pollutant	Gasoline Fuel (SCC 2-02-003-01, 2-03-003-01)		Diesel Fuel (SCC 2-02-001-02, 2-03-001-01)		EMISSION FACTOR RATING
	Emission Factor (lb/hp-hr) (power output)	Emission Factor (lb/MMBtu) (fuel input)	Emission Factor (lb/hp-hr) (power output)	Emission Factor (lb/MMBtu) (fuel input)	
NO_x 0.011		1.63	0.031	4.41	D
CO	6.96 E-03[d]	0.99[d]	6.68 E-03	0.95	D
SO_x	5.91 E-04	0.084	2.05 E-03	0.29	D
PM-10[b]	7.21 E-04	0.10	2.20 E-03	0.31	D
CO_2[c]	1.08	154	1.15	164	B
Aldehydes 4.85	E-04	0.07	4.63 E-04	0.07	D
TOC					
Exhaust	0.015	2.10	2.47 E-03	0.35	D
Evaporative	6.61 E-04	0.09	0.00	0.00	E
Crankcase	4.85 E-03	0.69	4.41 E-05	0.01	E
Refueling	1.08 E-03	0.15	0.00	0.00	E

[a] References 2,5-6,9-14. When necessary, an average ~~brake-specific~~ fuel consumption (BSFC) of 7,000 Btu/hp-hr was used to convert from lb/MMBtu to lb/hp-hr. To convert from lb/hp-hr to kg/kw-hr, multiply by 0.608. To convert from lb/MMBtu to ng/J, multiply by 430. SCC = Source Classification Code. TOC = total organic compounds.

[b] PM-10 = particulate matter less than or equal to 10 μm aerodynamic diameter. All particulate is assumed to be ≤ 1 μm in size.

[c] Assumes 99% conversion of carbon in fuel to CO_2 with 87 weight % carbon in diesel, 86 weight % carbon in gasoline, average BSFC of 7,000 Btu/hp-hr, diesel heating value of 19,300 Btu/lb, and gasoline heating value of 20,300 Btu/lb.

[d] Instead of 0.439 lb/hp-hr (power output) and 62.7 lb/mmBtu (fuel input), the correct emissions factors values are 6.96 E-03 lb/hp-hr (power output) and 0.99 lb/mmBtu (fuel input), respectively. This is an editorial correction. March 24, 2009

Table 3.3-2. SPECIATED ORGANIC COMPOUND EMISSION FACTORS FOR UNCONTROLLED DIESEL ENGINES[a]

EMISSION FACTOR RATING: E

Pollutant	Emission Factor (Fuel Input) (lb/MMBtu)
Benzene[b]	9.33 E-04
Toluene[b]	4.09 E-04
Xylenes[b]	2.85 E-04
Propylene	2.58 E-03
1,3-Butadiene[b,c]	<3.91 E-05
Formaldehyde[b]	1.18 E-03
Acetaldehyde[b]	7.67 E-04
Acrolein[b]	<9.25 E-05
Polycyclic aromatic hydrocarbons (PAH)	
Naphthalene[b]	8.48 E-05
Acenaphthylene	<5.06 E-06
Acenaphthene	<1.42 E-06
Fluorene	2.92 E-05
Phenanthrene	2.94 E-05
Anthracene	1.87 E-06
Fluoranthene	7.61 E-06
Pyrene	4.78 E-06
Benzo(a)anthracene	1.68 E-06
Chrysene	3.53 E-07
Benzo(b)fluoranthene	<9.91 E-08
Benzo(k)fluoranthene	<1.55 E-07
Benzo(a)pyrene	<1.88 E-07
Indeno(1,2,3-cd)pyrene	<3.75 E-07
Dibenz(a,h)anthracene	<5.83 E-07
Benzo(g,h,l)perylene	<4.89 E-07
TOTAL PAH	1.68 E-04

[a] Based on the uncontrolled levels of 2 diesel engines from References 6-7. Source Classification Codes 2-02-001-02, 2-03-001-01. To convert from lb/MMBtu to ng/J, multiply by 430.
[b] Hazardous air pollutant listed in the *Clean Air Act*.
[c] Based on data from 1 engine.

Supporting Information: Units 32, 33, & 34

CATERPILLAR

Interoffice Memorandum

Plant Or Office	Department	Attention	
Destroy	File Until (Date)		

Facility 88

Date May 8, 1995

Plant/ Office LEC

Department Gas Engine Product

Attention Walt E. Earleson

Subject : KCI 95-0064 Industrial Engine

The approved rating for the G3608 industrial engine is listed below. This document replaces the inquiry response dated February 16, 1995. The emission limits are based on the attached fuel composition.

Engine	G3608		
C/R	9.2:1	Guarantee:	
Continuous Rating	2080 bhp	BSFC (Btu/bhp-hr)+2.5%	6935
Speed	1000 rpm	NOx (g/bhp-hr)	1.00
SCAC Water Inlet	130F	CO (g/bhp-hr)	1.90
Jacket Water Outlet	190F	HC total (g/bhp-hr)	5.55
Altitude	< 6020 ft	NMNEHC (g/bhp-hr)	0.50
Max Ambient Temp	95F		
Fuel Methane #	81.7		

Heat Rejection:		Exhaust:	
Aftercooler** (kW)	354±5%	Flow (lb/hr)	23870
Oil Cooler (kW)	200±20%	Temp. (F)	865
Jacket Water (kW)	465±10%		

Engine Speed (rpm)		1000	900	750
Pump Flows:				
Aftercooler / Oil Cooler	(L/min)	1200	1080	900
Jacket Water	(L/min)	1460	1315	1095
Pump Rise:				
Aftercooler / Oil Cooler	(kPa)	295	240	170
Jacket Water	(kPa)	295	240	170

** Aftercooler data includes the site specific aftercooler heat rejection factor.

Please let me know if there are any other questions.

Robert D. Schueffner Robert D. Schueffner
R.D. Nevinger Ron Nevinger (by RDS)
Gas Engine Product
Large Engine Center
88-A24D, ext 5752

07-088472-01 PC

		100%	75%	50%	25%
Aspiration		TA	TA	TA	TA
Speed	rpm	1000	1000	1000	1000
JW / Outlet Temperature (°F)		190	190	190	190
A/C / Inlet Temperature (°F)		130	130	130	130
Engine Power	bhp	2222	1667	1111	555
NOx (as NO_2)	g/bhp-hr	1.00	1.00	1.00	1.90
CO	g/bhp-hr	1.90	1.90	1.90	2.78
HC (Total)	g/bhp-hr	4.70	5.60	5.90	4.50
HC (Non-Methane)	g/bhp-hr	0.70	0.84	0.88	0.68
Exhaust Oxygen	% (dry)	11.6	11.5	11.2	10.0
BSFC	Btu/hp-hr	6876	7110	7700	9780
Compressor Out Pressure	in. Hg abs	70.4	57.3	38.5	32.0
Compressor Out Temperature (°F)		290	240	185	115
Intake Manifold Pressure	in. Hg abs	69.7	58.8	38.3	22.9
Intake Manifold Temperature (°F)		148	145	138	135
Air-Fuel Ratio	vol/vol	19.40	19.20	18.40	15.50
Timing	°BTDC	22	22	22	22
Input Energy (LHV)	Btu/min ±5%	254,604	197,480	142,678	90,639
Work	Btu/min ±3%	94,257	70,693	47,129	23,564
Exhaust (LHV)	Btu/min ±10%	93,682	73,863	53,799	30,920
Exhaust (to 350°F)	Btu/min ±10%	67,832	45,320	34,066	20,828
Aftercooler	Btu/min ±5%	14,827	7,740	1,828	-422
Radiation	Btu/min ±25%	12,348	12,244	11,264	10,877
Oil Cooler	Btu/min ±20%	11,495	11,010	10,459	10,333
Jacket Water	Btu/min ±10%	27,865	22,131	16,300	10,367
Air Flow	lb/hr	24,809	18,891	13,071	7,000
Air Flow (scfm @ 77°F, 13.9 psia)		5,862	4,500	3,113	1,667
Exhaust Flow	lb/hr	25,374	19,487	13,501	7,273
Exhaust Flow (cfm @ stack T, 14.5 psia)		14,413	11,151	7,954	4,505
Exhaust Stack Temperature (°F)		864	875	917	965
Fuel Flow (scfh @ 60°F, 14.7 psia)		16,880	13,093	9,453	6,009

Aftercooler Heat Rejection Factors

G3608 Industrial - 130°F SCAC

750-1000 rpm

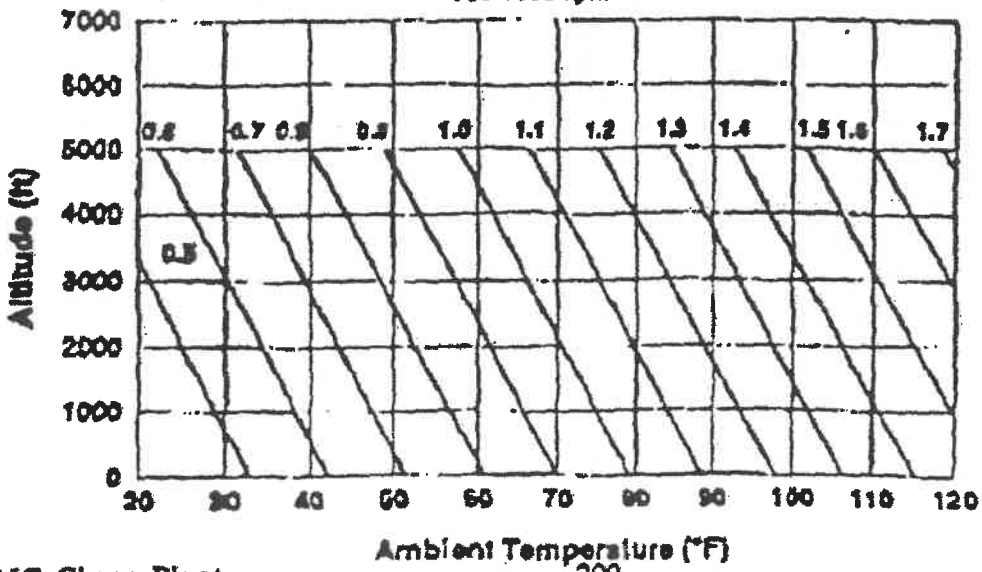

JM

Post-it™ brand fax transmittal memo 7671 | # of pages ▸

To Mike Moody	From Kevin Fikes
Co. KCL	Co. ISC
Dept. Eng	Phone # 256 1246
Fax # 448 4321	Fax # 257-4076

EMISSION C ion - Lean Burn)
CUSTOMEI E: June 1, 1995
ENDUSER:
PROPOSAI T: Kevin Fikes
ADDRESS: #: 918-250-1246
#: 918-254-4076

ENGINE DATA:	CASE#1
MFG:	Caterpillar
MODEL:	G3608LE
FUEL:	Natural Gas
BHP:	2080
RPM:	1000
EXH TEMP:	865°F
EXH FLOW:	12,849 scfm
ALT:	<6020 feet
FLANGE SIZE:	18 inch
SCOPE OF SUPPLY:	NN-SSA-18
APPROX LENGTH:	47.63 inches
APPROX DIAMETER:	34.25 inches
APPROX WEIGHT:	580 pounds

Double Element

EMISSION DATA EMITTANT	UNCONTROLLED ENGINE EMISSIONS (grams/Bhp-hr)	CONTROLLED ENGINE EMISSIONS REQUIRED (grams/Bhp-hr)
NOx	1.00	1.00
CO	1.90	0.19
NMHC	0.23	0.23
NMNE	0.50	0.18

PRE CONVERTER: As reported in engine manufacturers product bulletin corresponding to catalyst converter carburetor settings. A lean to stoichiometric air/fuel ratio is required (oxygen content in gas exhaust from engine greater than 2.00%)
TEMPERATURE: Maximum continuous service temperature is 1,250°F. Normal operating temperature ranges are 850°F to 1,150°F. A high temperature limit shut-down controller is required in the outlet of the converter.
DELTA BACK PRESSURE: Expected across the catalyst system ~ 6.0" H_2O.
LUBE OIL SPECIFICATION: Sulfated ash < 0.50% by weight, phosphorous <900 ppm; zinc < 400 ppm; Consumption rate < 0.0015 lb/Bhp-hr.
WARRANTY: 15 Months from the date of shipment or 12 months from the date of start-up; written notice required.
TERMS: Price firm for thirty (30) days from date of quotation. Payment net thirty (30) days from invoice. JMI credit approval required.

Bob Bittner, Sr. Inside Sales Engineer (610-971-3192)

CATALYTIC SYSTEMS DIVISION
ENVIRONMENTAL PRODUCTS

Total	11.7989			
Criteria Pollutants				
PM	4.9130	0.15943960	g/bhp-hr	EPA
CO	36.1438	1.17295218	g/bhp-hr	2SLB CLARK
NMHC	66.3279	2.15250000	g/bhp-hr	2SLB CLARK
NMEHC	59.3176	1.92500000	g/bhp-hr	2SLB CLARK
NOx	405.9929	13.17544484	g/bhp-hr	2SLB CLARK
SO2	0.0598	0.00194060	g/bhp-hr	EPA
Other Pollutants				
Cyclohexane	0.1989	0.00645500	g/bhp-hr	GRI Field
Butryaldehyde	0.0444	0.00144220	g/bhp-hr	EPA
Methane	102.1535	3.31512507	g/bhp-hr	2SLB CLARK
Acetylene	0.0363	0.00117647	g/bhp-hr	2SLB CLARK
Ethylene	1.3420	0.04355059	g/bhp-hr	2SLB CLARK
Ethane	11.3550	0.36849600	g/bhp-hr	2SLB CLARK
Propylene	0.8954	0.02905639	g/bhp-hr	2SLB CLARK
Propane	4.0103	0.13014361	g/bhp-hr	2SLB CLARK
Isobutane	0.3007	0.00976000	g/bhp-hr	2SLB CLARK
Butane	0.3996	0.01296828	g/bhp-hr	2SLB CLARK
Cyclopentane	0.3279	0.01064000	g/bhp-hr	2SLB CLARK
Butyrald/Isobutyraldehyde	0.1313	0.00426000	g/bhp-hr	2SLB CLARK
Pentane	1.9983	0.06484811	g/bhp-hr	2SLB CLARK
n-Pentane	0.3556	0.01154000	g/bhp-hr	2SLB CLARK
Cyclohexane	0.3808	0.01235636	g/bhp-hr	2SLB CLARK
Methylcyclohexane	0.6330	0.02054200	g/bhp-hr	2SLB CLARK
1,2-Dichloroethane	0.0043	0.00013930	g/bhp-hr	EPA
1,2-Dichloropropane	0.0045	0.00014720	g/bhp-hr	EPA
n-Octane	0.8451	0.02742400	g/bhp-hr	2SLB CLARK
1,2,3-Trimethylbenzene	1.0045	0.03260000	g/bhp-hr	2SLB CLARK
1,2,4-Trimethylbenzene	1.0065	0.03266200	g/bhp-hr	2SLB CLARK
1,3,5-Trimethylbenzene	1.0045	0.03260000	g/bhp-hr	2SLB CLARK
n-Nonane	1.0723	0.03480000	g/bhp-hr	2SLB CLARK
CO2	11,186.7746	363.03769350	g/bhp-hr	EPA

Unit Name: UNIT-31-34

Hours of Operation: 8,760 Yearly

Rate Power: 2,087 hp

Fuel Type: NATURAL GAS

Engine Type: 4-Stroke, Rich Burn

Emission Factor Set: FIELD > EPA > LITERATURE

Additional EF Set: -NONE-

Calculated Emissions (ton/yr)

Chemical Name	Emissions	Emission Factor		Emission Factor Set
HAPs				
Formaldehyde	2.0020	0.09942890	g/bhp-hr	GRI Field
Methanol	0.4027	0.02000000	g/bhp-hr	GRI Field
Acetaldehyde	0.1854	0.00920800	g/bhp-hr	EPA

Acrolein	0.1748	0.00867990 g/bhp-hr	EPA
Benzene	0.1050	0.00521450 g/bhp-hr	EPA
Toluene	0.0371	0.00184160 g/bhp-hr	EPA
Ethylbenzene	0.0016	0.00008180 g/bhp-hr	EPA
Xylenes(m,p,o)	0.0130	0.00064360 g/bhp-hr	EPA
Styrene	0.0008	0.00003930 g/bhp-hr	EPA
Naphthalene	0.0065	0.00032050 g/bhp-hr	EPA
Ethylene Dibromide	0.0014	0.00007030 g/bhp-hr	EPA
Vinyl Chloride	0.0005	0.00002370 g/bhp-hr	EPA
Methylene Chloride	0.0027	0.00013600 g/bhp-hr	EPA
1,1-Dichloroethane	0.0008	0.00003730 g/bhp-hr	EPA
1,3-Dichloropropene	0.0008	0.00004190 g/bhp-hr	EPA
Chlorobenzene	0.0009	0.00004260 g/bhp-hr	EPA
Chloroform	0.0009	0.00004520 g/bhp-hr	EPA
1,1,2-Trichloroethane	0.0010	0.00005050 g/bhp-hr	EPA
1,1,2,2-Tetrachloroethane	0.0017	0.00008350 g/bhp-hr	EPA
Carbon Tetrachloride	0.0012	0.00005840 g/bhp-hr	EPA
Total	2.9849		
Criteria Pollutants			
PM	1.2898	0.06405970 g/bhp-hr	EPA
CO	291.9502	14.50000000 g/bhp-hr	GRI Field
NMEHC	1.9669	0.09769010 g/bhp-hr	EPA
NOx	368.4612	18.30000000 g/bhp-hr	GRI Field
SO2	0.0391	0.00194060 g/bhp-hr	EPA
Other Pollutants			
Butryaldehyde	0.0032	0.00016040 g/bhp-hr	EPA
Methane	15.2837	0.75907880 g/bhp-hr	EPA
Ethane	4.6781	0.23234410 g/bhp-hr	EPA
1,2-Dichloroethane	0.0008	0.00003730 g/bhp-hr	EPA
1,2-Dichloropropane	0.0009	0.00004290 g/bhp-hr	EPA
CO2	7,309.5800	363.03769350 g/bhp-hr	EPA

Unit Name: UNIT 50

Hours of Operation: 8,760 Yearly

Rate Power: 3,335 hp

Fuel Type: NATURAL GAS

Engine Type: 4-Stroke, Lean Burn

Emission Factor Set: EPA > FIELD > LITERATURE

Additional EF Set: -NONE-

Calculated Emissions (ton/yr)

Chemical Name	Emissions	Emission Factor	Emission Factor Set
HAPs			
Tetrachloroethane	0.0003	0.00000820 g/bhp-hr	EPA
Formaldehyde	5.6067	0.17425810 g/bhp-hr	EPA
Methanol	0.2655	0.00825090 g/bhp-hr	EPA
Acetaldehyde	0.8877	0.02759090 g/bhp-hr	EPA
1,3-Butadiene	0.0284	0.00088120 g/bhp-hr	EPA
[illegible]	0.5468	0.01696380 g/bhp-hr	EPA

Supporting Information: Units 35, 36, & 37

Solar Turbines

A Caterpillar Company

PREDICTED ENGINE PERFORMANCE

Customer: *EPNG*	Model: MARS 160-T15000 (T3 CTRL)
Job ID: Chaco	Package Type: CS/MD
Run By: NAPIERALA, GP — Date Run: 20-APR-95	Match: 59F MATCH
Engine Performance Code: REV. 2.70 — Engine Performance Data: REV. 2.0	Fuel System: GAS
	Fuel Type: SD NATURAL GAS

Elevation	Feet	0
Inlet Loss	in. H2O	0
Exhaust Loss	in. H2O	0
Ambient Temperature	Deg. F	59.0
Relative Humidity	%	60.0
Driven Equipment Speed	RPM	9314
Specified Load	Hp	FULL
Net Output Power	Hp	14550
Heat Rate	Btu/Hp-hr	7721
Nominal Net Output Power	Hp	15000
Nominal Heat Rate	Btu/Hp-hr	7490
Fuel Flow	MMBtu/hr	112.34
Engine Exhaust Flow	lbm/hr	335491
Exhaust Temperature	Deg. F	907

SOLAR TURBINES INCORPORATED
ENGINE PERFORMANCE CODE REV. 2.61
JOB ID: Chaco Pit

DATE RUN: 19-MAY-94
RUN BY: NAPIERALA, GP

NEW EQUIPMENT PREDICTED EMISSION PERFORMANCE
DATA FOR POINT NUMBER 1

Fuel: GAS
Water Injection: NO
Number of Engines Tested: 0
Model: MARS 100-T15000 CS/MD 59F MATCH GAS
Emissions Data: REV. 0.0

Customer: BPNG
Inquiry Number:

CRITICAL WARNINGS IN USE OF DATA FOR PERMITTING

1. Short term permitting values such as PPMV or lbs./hr. should be based on worst case actual operating conditions specific to the application and the site. Worst case for one pollutant is not necessarily the same for another. The values on this form are only predicted emissions at one specific operating condition; not necessarily the worst case.

2. Long term reference emission units (e.g. tons/yr.) should reference the average conditions at the site (e.g. ISO). That number should not be derived from the worst case value referenced above, or conversely this average must not be used to calculate worst case.

3. Nominal values are based on actual test results, or predicted in the case of no actual engine tests. Expected maximum values should be referenced for permitting.

4. If a SoloNOX model is planned to be installed in the future, use no less than 50 PPMV CO.

The following predicted emissions performance is based on the following specific single point: (see attached)

HP-11818., %Full Load-100.0, ALTITUDE= 6023.0 FEET, %RH= 60.0, TEMP= 55.0 F

NOX NOM	NOX MAX	CO NOM	CO MAX	UHC NOM	UHC MAX	
177.65	204.0	2.42	10.9	2.270	14.8	PPMvd at 15% O2
278.04	333.6	2.31	10.4	1.240	8.6	TON/YR

PLEASE SUBMIT SPECIAL ENGINE REQUEST FOR GUARANTEE EMISSION VALUES

NO GUARANTEE EMISSION AVAILABLE FOR THIS ENGINE

OTHER IMPORTANT NOTES

1. Solar does not provide maximum values for water-to-fuel ratio, SOX, particulates, or conditions outside those above without separate written approval.
2. Solar can optionally provide factory testing in San Diego to ensure the actual unit(s) meet the above values within the tolerances quoted. Pricing and schedule impact will be provided upon request.
3. Fuel must meet Solar standard fuel specification ES 9-98. Predicted emissions are based on the attached fuel composition, or, San Diego natural gas or equivalent.
4. If the above information is being used regarding existing equipment,

NMEHC	1.4408	0.0092184000 g/bhp-hr	EPA
NOx	195.7015	1.2521629000 g/bhp-hr	GRI Field
SO2	0.1605	0.0010272000 g/bhp-hr	GRI Field
Other Pollutants			
Methane	154.2890	0.9871923000 g/bhp-hr	GRI Field
Acetylene	1.1199	0.0071654000 g/bhp-hr	GRI Field
Ethylene	2.1810	0.0139545000 g/bhp-hr	GRI Field
Ethane	23.4567	0.1500837000 g/bhp-hr	GRI Field
Propane	2.5007	0.0160000000 g/bhp-hr	GRI Field
Isobutane	0.7502	0.0048000000 g/bhp-hr	GRI Field
Butane	0.8127	0.0052000000 g/bhp-hr	GRI Field
Cyclopentane	0.2581	0.0016511000 g/bhp-hr	GRI Field
Butyrald/Isobutyraldehyde	0.2094	0.0013400000 g/bhp-hr	GRI Field
n-Pentane	12.6830	0.0811500000 g/bhp-hr	GRI Field
Cyclohexane	0.9571	0.0061240000 g/bhp-hr	GRI Field
Methylcyclohexane	1.3802	0.0088312000 g/bhp-hr	GRI Field
n-Octane	0.4984	0.0031889000 g/bhp-hr	GRI Field
1,3,5-Trimethylbenzene	0.4689	0.0030000000 g/bhp-hr	GRI Field
n-Nonane	0.0832	0.0005326000 g/bhp-hr	GRI Field
CO2	75,467.5009	482.8660778000 g/bhp-hr	EPA
Vanadium	0.0001	0.0000007000 g/bhp-hr	GRI Field
Copper	0.0032	0.0000205000 g/bhp-hr	GRI Field
Molybdenum	0.0032	0.0000203000 g/bhp-hr	GRI Field
Barium	0.0036	0.0000229000 g/bhp-hr	GRI Field

Unit Number: 35-37
Hours of Operation: 8,760 Yearly
Rated Horsepower: 11,818 hp
Fuel Type: NATURAL GAS
Emission Factor Set: FIELD > EPA > LITERATURE
Additional EF Set: -NONE-

Calculated Emissions

Chemical Name	Emissions (ton/yr)	Emission Factor	EF Set
HAPs			
PAHs	0.0011	0.0000097000 g/bhp-hr	EPA
Formaldehyde	1.9311	0.0169368000 g/bhp-hr	GRI Field
Acetaldehyde	1.9765	0.0173357000 g/bhp-hr	GRI Field
1,3-Butadiene	0.0070	0.0000616000 g/bhp-hr	GRI Field
Acrolein	0.0296	0.0002600000 g/bhp-hr	GRI Field
Propional	0.0986	0.0008650000 g/bhp-hr	GRI Field
Propylene Oxide	0.0145	0.0001273000 g/bhp-hr	EPA
Benzene	0.0614	0.0005384000 g/bhp-hr	GRI Field
Toluene	0.0469	0.0004110000 g/bhp-hr	GRI Field
Ethylbenzene	0.0160	0.0001405000 g/bhp-hr	EPA
Xylenes(m,p,o)	0.1418	0.0012441000 g/bhp-hr	GRI Field
2,2,4-Trimethylpentane	0.1830	0.0016053000 g/bhp-hr	GRI Field

n-Hexane	0.1717	0.0015058000 g/bhp-hr	GRI Field
Phenol	0.0126	0.0001101000 g/bhp-hr	GRI Field
Naphthalene	0.0009	0.0000076000 g/bhp-hr	GRI Field
2-Methylnaphthalene	0.0001	0.0000013000 g/bhp-hr	GRI Field
Biphenyl	0.0377	0.0003305000 g/bhp-hr	GRI Field
Phenanthrene	0.0001	0.0000005000 g/bhp-hr	GRI Field
Chrysene	0.0001	0.0000010000 g/bhp-hr	GRI Field
Beryllium	0.0000	0.0000001000 g/bhp-hr	GRI Field
Phosphorus	0.0074	0.0000652000 g/bhp-hr	GRI Field
Chromium	0.0009	0.0000082000 g/bhp-hr	GRI Field
Manganese	0.0020	0.0000175000 g/bhp-hr	GRI Field
Nickel	0.0007	0.0000061000 g/bhp-hr	GRI Field
Cobalt	0.0002	0.0000016000 g/bhp-hr	GRI Field
Arsenic	0.0001	0.0000006000 g/bhp-hr	GRI Field
Selenium	0.0000	0.0000003000 g/bhp-hr	GRI Field
Cadmium	0.0000	0.0000002000 g/bhp-hr	GRI Field
Mercury	0.0003	0.0000027000 g/bhp-hr	GRI Field
Lead	0.0004	0.0000034000 g/bhp-hr	GRI Field
Total HAPs:	4.7428		

Criteria Pollutants

PM	3.3032	0.0289720000 g/bhp-hr	EPA
CO	240.3762	2.1082842000 g/bhp-hr	GRI Field
NMHC	22.1050	0.1938780000 g/bhp-hr	GRI Field
NMEHC	1.0510	0.0092184000 g/bhp-hr	EPA
NOx	142.7654	1.2521629000 g/bhp-hr	GRI Field
SO2	0.1171	0.0010272000 g/bhp-hr	GRI Field

Other Pollutants

Methane	112.5548	0.9871923000 g/bhp-hr	GRI Field
Acetylene	0.8170	0.0071654000 g/bhp-hr	GRI Field
Ethylene	1.5910	0.0139545000 g/bhp-hr	GRI Field
Ethane	17.1118	0.1500837000 g/bhp-hr	GRI Field
Propane	1.8242	0.0160000000 g/bhp-hr	GRI Field
Isobutane	0.5473	0.0048000000 g/bhp-hr	GRI Field
Butane	0.5929	0.0052000000 g/bhp-hr	GRI Field
Cyclopentane	0.1883	0.0016511000 g/bhp-hr	GRI Field
Butyrald/Isobutyraldehyde	0.1528	0.0013400000 g/bhp-hr	GRI Field
n-Pentane	9.2523	0.0811500000 g/bhp-hr	GRI Field
Cyclohexane	0.6982	0.0061240000 g/bhp-hr	GRI Field
Methylcyclohexane	1.0069	0.0088312000 g/bhp-hr	GRI Field
n-Octane	0.3636	0.0031889000 g/bhp-hr	GRI Field
1,3,5-Trimethylbenzene	0.3420	0.0030000000 g/bhp-hr	GRI Field
n-Nonane	0.0607	0.0005326000 g/bhp-hr	GRI Field
CO2	55,054.0078	482.8660778000 g/bhp-hr	EPA
Vanadium	0.0001	0.0000007000 g/bhp-hr	GRI Field
Copper	0.0023	0.0000205000 g/bhp-hr	GRI Field
Molybdenum	0.0023	0.0000203000 g/bhp-hr	GRI Field
Barium	0.0026	0.0000229000 g/bhp-hr	GRI Field

Supporting Information: TRNCC RG-109

TNRCC

October 2000
RG-109 (Draft)

Air Permit Technical Guidance for Chemical Sources:

Flares and Vapor Oxidizers

printed on recycled paper

Air Permits Division

TEXAS NATURAL RESOURCE CONSERVATION COMMISSION

TNRCC

Barry R. McBee, *Chairman*
R. B. "Ralph" Marquez, *Commissioner*
John M. Baker, *Commissioner*

Jeffrey A. Saitas, P.E., *Executive Director*

Authorization for use or reproduction of any original material contained in this publication, i.e., not obtained from other sources, is freely granted. The Commission would appreciate acknowledgment.

Copies of this publication are available for public use through the Texas State Library, other state depository libraries, and the TNRCC Library, in compliance with the state depository law. For more information on TNRCC publications call (512)239-0028 or visit our Web site at:

htt:www.tnrcc.state.tx.us/publications

Published and distributed by:
Texas Natural Resource Conservation Commission
P.O. Box 13087
Austin, Texas 78711-3087

The TNRCC is an equal opportunity/affirmative action employer. The agency does not allow discrimination on the basis of race, color, religion, national origin, sex, disability, age, sexual orientation or veteran status. In compliance with the Americans with Disabilities Act, this document may be requested in alternate formats by contacting the TNRCC at (512)239-0028, Fax 239-4488, or 1-800-RELAY-TX (TDD), or by writing P.O. Box 13087, Austin, TX 78711-3087.

Technical Disclaimer

This document is intended as guidance to explain the specific requirements for new source review permitting of flares and vapor oxidizers; it does not supersede or replace any state or federal law, regulation, or rule. References to abatement equipment technologies are not intended to represent minimum or maximum levels of Best Available Control Technology (BACT). Determinations of BACT are made on a case-by-case basis as part of the New Source Review of permit applications. BACT determinations are always subject to adjustment in consideration of specific process requirements, air quality concerns, and recent developments in abatement technology. Additionally, specific health effects concerns may indicate stricter abatement than required by the BACT determination.

The represented calculation methods are intended as an aid in the completion of acceptable submittals; alternate calculation methods may be equally acceptable if they are based upon, and adequately demonstrate, sound engineering assumptions or data.

These guidelines are applicable as of this document's publication date but are subject to revision during the permit application preparation and review period. It is the responsibility of the applicants to remain abreast of any guideline or regulation developments that may affect their industries.

The electronic version of this document may not contain attachments or forms (such as the PI-1, Standard Exemptions, or tables) that can be obtained electronically elsewhere on the TNRCC Web site.

The special conditions included with these guidelines are for purposes of example only. Special conditions included in an actual permit are written by the reviewing engineer to address specific permit requirements and operating conditions.

TABLE OF CONTENTS

Chapter 1—Overview 1

Chapter 2—Types of Flare and Oxidizer Systems 3
- Flares 3
- Vapor Oxidizers 4

Chapter 3—State and Federal Permitting Requirements 5
- Preconstruction Authorization 5
- General Regulation Applicability 6

Chapter 4—Best Available Control Technology 9
- BACT for Flares 9
- BACT for Vapor Oxidizers 13

Chapter 5—Emission Factors, Efficiencies, and Calculations 18
- Flares: Introduction 18
- Flare Emission Factors 18
- Flare Destruction Efficiencies 18
- Sample Calculations 22
- Vapor Oxidizers 29

Chapter 6—Example Permit Conditions 29
- General 30
- Flares 30
- Enclosed Flares or Vapor Oxidizers 31
- Vapor Oxidizers 33

References 35

Glossary 37

Attachment A—General Control Device Requirements, 40 CFR § 60.18 . . 39

Attachment B—Typical Refinery Flare Data 42

Attachment C—Typical Acid Gas Flare Data 44

Attachment D—NSR Table 4, Combustion Units 46

Tables

Table 1. Applicable TNRCC Regulations 6
Table 2. Flare Pilot Requirements 12
Table 3. BACT, Sampling, and Monitoring Guidelines for Vapor Oxidizers 16
Table 4. Flare Factors 19
Table 5. 99.5 Percent DRE Flare Factors 21
Table 6. Waste Stream Constituents in Mole Percent 23
Table 7. Estimation of Average Mass Flow Rates 23
Table 8. Emission Rates 23
Table 9. Estimation of Net Heat Releases 24
Table 10. Estimation of Volume Average Molecular Weight 28

Chapter 2—Types of Flare and Oxidizer Systems

This document provides guidance for two classes of vapor combustion control devices: flares and vapor oxidizers. While there may be some overlap between the two, flares have generally been treated separately by the EPA and the TNRCC, in large part because flares have an open flame and often cannot be sampled, so emissions are estimated based on the results of flare testing performed in the early 1980s. Each of the two classes will be dealt with separately in each of the chapters of this document.

Combustion Control Devices NOT Discussed. This document will not cover permitting of RCRA or BIF units because the requirements for these units often go beyond the requirements for state air permitting. Incinerators used to treat solid wastes are covered in another technical guidance document, *Incinerators*. Guidance for combustion control devices associated with spray paint booths, coatings operations, and semiconductor facilities should be obtained by calling the TNRCC New Source Review Permits Division at (512) 239-1250.

Flares

Flare systems generally are open-flame control devices used for disposing of waste gas streams during both routine process and emergency or upset conditions. In addition to simple, unassisted flares, typical smokeless flare systems include, but are not limited to, the following:

- ***Enclosed Flares/Vapor Combustors.*** Enclosed flares are used in disposing of waste gas streams in instances where a visible flame is unacceptable. Applications include chemical processing, petroleum refining and production, and municipal waste gas treatment. These may be referred to as vapor combustors and can have more than one burner in the stack.

- ***Steam-Assisted Flares.*** Steam-assisted flares are used in disposing of low-pressure waste gas streams when steam is available and practical to minimize smoking from the flare. Applications are similar to those of enclosed flares. Flares might also be assisted with natural gas if readily available on site; these flares would undergo a case-by-case review.

- ***Air-Assisted Flares.*** Air-assisted flares are used in disposing of low-pressure waste gas streams when practical or when steam utilities are not available to minimize smoking from the flare. Applications include chemical processing, petroleum refining and production, and pipeline transportation.

- ***Sonic Flares.*** Sonic flares are used in disposing of high-pressure waste gas streams. Applications include gas production, pipeline transportation, and treatment plants.

- ***Multipoint Flare Systems.*** Multipoint flare systems are used in disposing of both high- and low-pressure waste gas streams. Multiple burner tips in conjunction with a staged control system provide for controlled combustion. Applications are similar to those of air-assisted flares.

Vapor Oxidizers

These devices generally do not have an open flame but have an exhaust stack which allows for sampling and monitoring of exhaust emissions. The most common type, thermal, relies on the combustion heat of the waste gas and assist fuel (if required) to oxidize the waste gas air contaminants. Other types include:

- ***Recuperative.*** In this case, the waste gas is directed to a heat exchanger to be preheated by the exhaust gas, to minimize the need for additional assist fuel. Recuperative oxidizers are considered a subset of thermal oxidizers in this document.

- ***Regenerative.*** Combustion takes place in a chamber with a heat sink, such as ceramic saddles, which retains the heat of combustion, allowing for combustion of more dilute vapor streams (which have a low heat of combustion) at a lower cost. These units generally have multiple chambers, which allow for the preheat of one chamber by exhaust gases while combustion takes place in another chamber.

- ***Catalytic.*** Combustion takes place over a catalyst that allows for combustion at a lower temperature (in the range of 600 to 800°F as opposed to greater than 1400°F for many thermal oxidizers). Catalytic oxidizers function best with a waste stream with constant flow and composition.

Chapter 5—Emission Factors, Efficiencies, and Calculations

This chapter provides detailed instructions for the calculations necessary to verify BACT and estimate emissions from flares and vapor oxidizers. Flares must be checked to determine whether they will satisfy the flow and thermal requirements of 40 CFR § 60.18, and their emissions are determined by the use of emission factors. Example calculations are provided for these flare calculations.

Oxidizer emissions are determined by using previous sampling results or emission factors from the manufacturer or AP-42. These calculations are very similar to the flare calculations and are only discussed in general terms.

Flares: Introduction

Although emissions from emergency flares are not included in a permit when it is issued, emissions should be estimated for both routine process flares and emergency flares. Sometimes, emissions of routine pilot gas combustion may be included in an issued permit for emergency flares (although not required).

In this section, the *flare* emission factors and destruction efficiencies are presented first. This information is followed by sample *calculations* that demonstrate how to ensure that the requirements of 40 CFR § 60.18 are satisfied and how to estimate emissions from a flare. Flare data in Attachment B (typical refinery flare) will be used as a basis in most of the following calculations. Flare data in Attachment C (acid gas flare) will be used as a basis in the example calculations for SO_2 emissions.

Flare Emission Factors

The usual flare destruction efficiencies and emission factors are provided in Table 4. The high-Btu waste streams referred to in the table have a heating value greater than 1,000 Btu/scf.

Flare Destruction Efficiencies

Claims for destruction efficiencies greater than those listed in Table 4 will be considered on a case-by-case basis. The applicant may make one of the three following demonstrations to justify the higher destruction efficiency: (1) general method, (2) 99.5 percent justification, or (3) flare stack sampling.

Table 4. Flare Factors

Waste Stream	Destruction/Removal Efficiency (DRE)
VOC	98 percent (generic) 99 percent for compounds containing no more than 3 carbons that contain no elements other than carbon and hydrogen in addition to the following compounds: methanol, ethanol, propanol, ethylene oxide and propylene oxide
H_2S	98 percent
NH_3	case by case
CO	case by case
Air Contaminants	**Emission Factors**
thermal NO_x	steam-assist: high Btu 0.0485 lb/MMBtu low Btu 0.068 lb/MMBtu other: high Btu 0.138 lb/MMBtu low Btu 0.0641 lb/MMBtu
fuel NO_x	NO_x is 0.5 wt percent of inlet NH_3, other fuels case by case
CO	steam-assist: high Btu 0.3503 lb/MMBtu low Btu 0.3465 lb/MMBtu other: high Btu 0.2755 lb/MMBtu low Btu 0.5496 lb/MMBtu
PM	none, required to be smokeless
SO_2	100 percent S in fuel to SO_2

*The only exeption ot this is if inorganics might be emitted from the flare. In the case of landfills, the AP-42 PM factor may be used. In other cases, the emissions should be based on the composition of the waste stream routed to the flare.

Supporting Information: Unit 46

CALLIDUS TECHNOLOGIES INC. - FAX TRANSMITTAL SHEET

7130 South Lewis, Suite 635
Tulsa, OK 74136

PHONE: (918) 523-2209 FAX: (918) 523-2391

TO:	Steve Tzap/Al Farrell	FROM:	Roop Bhan
COMPANY:	Cardinal Resources	DATE:	September 11, 1998
FAX NO.:	505-564-4017	PAGES:	1

RE: Thermal Oxidizer System
Proposal No. T-9807-170075-RT

The flue gas flowrate out of the stack is calculated to be **24,630 ACFM** at actual conditions (11.6 PSIA and 1000 degrees F). According to Walt, the 30 ft. stack has been deemed as adequate by the environmental authorities.

In order to meet the rather tough schedule on this job, we do expect the purchase order to be placed today.

If we can be of any further help, please let me know.

Best regards,

cc: Walt Brounlin 281-370-4895

7130 South Lewis, Suite 635
Tulsa, OK 74136

PHONE: (918) 523-2209 FAX: (918) 523-2391

TO:	Walt Braunlin	FROM:	Roop Bhan
COMPANY:	Cardinal Resources	DATE:	August 20, 1998
FAX NO.:	281-370-4895	PAGES:	1

RE: Incinerator System
Proposal No. T-9807-170075-HT

This is in response to your fax of August 20. We are pleased to confirm the following emissions from the unit:

CO	1.3 lb/hr
NOx	4.5
VOC	.1

We will also guarantee a destruction efficiency of 99 percent for hydrogen sulfide and hydrocarbons.

We can guarantee the above numbers only at a temperature of 1500 F and above. It is quite possible that an emissions test during actual operation may indicate that a temperature of less than 1500 F is able to achieve the desired results. In that case, the unit can be operated at the lower temperature. However, we cannot give you a guarantee for a lower operating temperature based on our experience with similar units in the past.

If you need any further information or have any questions, please do not hesitate to contact me at 918-523-2209.

Best regards,

B. DESIGN SUMMARY SHEET

1. Waste Conditions (as given in customer's inquiry)

Flowrate, MMSCFD 6.82
Temperature, °F 130
Pressure available, psig 2.4

2. Operating Conditions

a. Thermal oxidizer temperature, °F 1500
b. Thermal oxidizer residence time, sec. 1.0
c. Excess air, % vol. 25

3. Auxiliary Fuel Requirement

a. Fuel gas pressure required, psig 35
b. Fuel required, MMBtu/hr 8.7

4. Utility Requirements

a. Electricity at 440 V/3 phase/60 HZ, HP 10.0
b. Electricity at 110 V/1 phase/60 HZ, kVA 1.5
c. Instrument air at 80 psig

5. Other Data

a. Total maximum heat release, MMBtu/hr 9.2
b. Waste gas heat release, MMBtu/hr 0.5
c. Combustion air requirement, SCFM 2020

6. Preheat Exchanger Data

a. Flue gas temperature in, °F 1500
b. Flue gas temperature out, °F 1000
c. Waste gas temperature in, °F 130
d. Waste gas temperature out, °F 900
e. Heat removed, MMBtu/hr 6.3

7. Pressure Drops (Air), Inches W.C.

a. Burner & Ducting 5
b. T.O. 1
c. Preheater, cold side/hot side 18/1
d. Ducting/Stack 1

8. Performance Data

Based on the waste conditions given in customer's inquiry and based on operating the equipment per conditions outlined in this proposal, we will guarantee the following:

Destruction efficiency of organics, %	99+
NOx, ppmV	120
CO, ppmV	50
H_2S, ppmV	10

ArrTech Environmental Systems, Inc.

6506 South Lewis, Suite 220
Tulsa, Oklahoma 74136
Phone: (918) 748-4404
Fax: (918) 744-8016

TO:	ABB RANDALL HOUSTON, TEXAS	DATE:	May 10, 1995
ATTN:	RAYNE HARRIS	SENDER:	REED T. MELTON
YOUR REF.:	ABBR # 00152	ArrTech REF.:	PI-220
FAX NO.:	(713)-735-6708	TOTAL PAGES: (including this page)	5
CC:	PI-220 FILE		

(918) 748-4404 • If there is a problem in transmission, please call: • (918) 748-4404

Rayne:

Please note our proposal for the subject thermal oxidizer per your request of last week. Initially I need to correct an error in our original data presented two (?) weeks ago to El Paso.

1. Base Case: Tail Gas Component Mols/Hr

@ 120°F	CO2	495.34	
	CH4	0.05	
	C2H6	0.97	
	C3H8	0.09	
	C4H10	0.10	
	H2S	0.10	
	H2O	36.48	
	Total	532.76	M.W. 42.201

Combustor Conditions: 1,400°F @ 1.0 Sec.

Natural Gas fired: 14.533 MMBTU/Hr (LHV) or 16,034.5 SCFH of CH4
16.036 MMBTU/Hr (HHV)

Flue Gas: Component Mols/Hr

O2	43.24	
N2	497.80	
CO2	539.81	
H2O	128.23	
SO2	0.10	
TOTAL	1,209.18	M.W. = 34.340

Supporting Information: Unit 48

Table 1.4-1. EMISSION FACTORS FOR NITROGEN OXIDES (NO_x) AND CARBON MONOXIDE (CO) FROM NATURAL GAS COMBUSTION[a]

Combustor Type (MMBtu/hr Heat Input) [SCC]	NO_x[b]		CO	
	Emission Factor ($lb/10^6$ scf)	Emission Factor Rating	Emission Factor ($lb/10^6$ scf)	Emission Factor Rating
Large Wall-Fired Boilers (>100) [1-01-006-01, 1-02-006-01, 1-03-006-01]				
Uncontrolled (Pre-NSPS)[c]	280	A	84	B
Uncontrolled (Post-NSPS)[c]	190	A	84	B
Controlled - Low NO_x burners	140	A	84	B
Controlled - Flue gas recirculation	100	D	84	B
Small Boilers (<100) [1-01-006-02, 1-02-006-02, 1-03-006-02, 1-03-006-03]				
Uncontrolled	100	B	84	B
Controlled - Low NO_x burners	50	D	84	B
Controlled - Low NO_x burners/Flue gas recirculation	32	C	84	B
Tangential-Fired Boilers (All Sizes) [1-01-006-04]				
Uncontrolled	170	A	24	C
Controlled - Flue gas recirculation	76	D	98	D
Residential Furnaces (<0.3) [No SCC]				
Uncontrolled	94	B	40	B

[a] Reference 11. Units are in pounds of pollutant per million standard cubic feet of natural gas fired. To convert from $lb/10^6$ scf to $kg/10^6$ m^3, multiply by 16. Emission factors are based on an average natural gas higher heating value of 1,020 Btu/scf. To convert from $lb/10^6$ scf to lb/MMBtu, divide by 1,020. The emission factors in this table may be converted to other natural gas heating values by multiplying the given emission factor by the ratio of the specified heating value to this average heating value. SCC = Source Classification Code. ND = no data. NA = not applicable.

[b] Expressed as NO_2. For large and small wall fired boilers with SNCR control, apply a 24 percent reduction to the appropriate NO_x emission factor. For tangential-fired boilers with SNCR control, apply a 13 percent reduction to the appropriate NO_x emission factor.

[c] NSPS=New Source Performance Standard as defined in 40 CFR 60 Subparts D and Db. Post-NSPS units are boilers with greater than 250 MMBtu/hr of heat input that commenced construction modification, or reconstruction after August 17, 1971, and units with heat input capacities between 100 and 250 MMBtu/hr that commenced construction modification, or reconstruction after June 19, 1984.

TABLE 1.4-2. EMISSION FACTORS FOR CRITERIA POLLUTANTS AND GREENHOUSE GASES FROM NATURAL GAS COMBUSTION[a]

Pollutant	Emission Factor ($lb/10^6$ scf)	Emission Factor Rating
CO_2[b]	120,000	A
Lead	0.0005	D
N_2O (Uncontrolled)	2.2	E
N_2O (Controlled-low-NO_x burner)	0.64	E
PM (Total)[c]	7.6	D
PM (Condensable)[c]	5.7	D
PM (Filterable)[c]	1.9	B
SO_2[d]	0.6	A
TOC	11	B
Methane	2.3	B
VOC	5.5	C

[a] Reference 11. Units are in pounds of pollutant per million standard cubic feet of natural gas fired. Data are for all natural gas combustion sources. To convert from $lb/10^6$ scf to $kg/10^6$ m^3, multiply by 16. To convert from $lb/10^6$ scf to lb/MMBtu, divide by 1,020. The emission factors in this table may be converted to other natural gas heating values by multiplying the given emission factor by the ratio of the specified heating value to this average heating value. TOC = Total Organic Compounds. VOC = Volatile Organic Compounds.

[b] Based on approximately 100% conversion of fuel carbon to CO_2. $CO_2[lb/10^6 scf] = (3.67)(CON)(C)(D)$, where CON = fractional conversion of fuel carbon to CO_2, C = carbon content of fuel by weight (0.76), and D = density of fuel, 4.2×10^4 $lb/10^6$ scf.

[c] All PM (total, condensible, and filterable) is assumed to be less than 1.0 micrometer in diameter. Therefore, the PM emission factors presented here may be used to estimate PM_{10}, $PM_{2.5}$ or PM_1 emissions. Total PM is the sum of the filterable PM and condensible PM. Condensible PM is the particulate matter collected using EPA Method 202 (or equivalent). Filterable PM is the particulate matter collected on, or prior to, the filter of an EPA Method 5 (or equivalent) sampling train.

[d] Based on 100% conversion of fuel sulfur to SO_2. Assumes sulfur content is natural gas of 2,000 grains/10^6 scf. The SO_2 emission factor in this table can be converted to other natural gas sulfur contents by multiplying the SO_2 emission factor by the ratio of the site-specific sulfur content (grains/10^6 scf) to 2,000 grains/10^6 scf.

GRI-HAPCalc ® 3.01
External Combustion Devices Report

Facility ID:	**ENTERPRISE CHACO**	**Notes:**
Operation Type:	**GAS PLANT**	
Facility Name:	**CHACO GAS PLANT**	
User Name:		
Units of Measure:	**U.S. STANDARD**	

Note: Emissions less than 5.00E-09 tons (or tonnes) per year are considered insignificant and are treated as zero. These emissions are indicated on the report with a "0". Emissions between 5.00E-09 and 5.00E-05 tons (or tonnes) per year are represented on the report with "0.0000".

External Combustion Devices

Unit Name: 48

Hours of Operation:	8,760	Yearly
Heat Input:	7.68	MMBtu/hr
Fuel Type:	NATURAL GAS	
Device Type:	HEATER	
Emission Factor Set:	FIELD > EPA > LITERATURE	
Additional EF Set:	-NONE-	

Calculated Emissions (ton/yr)

Chemical Name	Emissions	Emission Factor	Emission Factor Set
HAPs			
3-Methylcholanthrene	0.0000	0.0000000018 lb/MMBtu	EPA
7,12-Dimethylbenz(a)anthracene	0.0000	0.0000000157 lb/MMBtu	EPA
Formaldehyde	0.0284	0.0008440090 lb/MMBtu	GRI Field
Methanol	0.0324	0.0009636360 lb/MMBtu	GRI Field
Acetaldehyde	0.0248	0.0007375920 lb/MMBtu	GRI Field
1,3-Butadiene	0.0115	0.0003423350 lb/MMBtu	GRI Field
Benzene	0.0252	0.0007480470 lb/MMBtu	GRI Field
Toluene	0.0342	0.0010163310 lb/MMBtu	GRI Field
Ethylbenzene	0.0711	0.0021128220 lb/MMBtu	GRI Field
Xylenes(m,p,o)	0.0444	0.0013205140 lb/MMBtu	GRI Field
2,2,4-Trimethylpentane	0.0956	0.0028417580 lb/MMBtu	GRI Field
n-Hexane	0.0473	0.0014070660 lb/MMBtu	GRI Field
Phenol	0.0000	0.0000001070 lb/MMBtu	GRI Field
Styrene	0.0699	0.0020788960 lb/MMBtu	GRI Field
Naphthalene	0.0000	0.0000005100 lb/MMBtu	GRI Field
2-Methylnaphthalene	0.0000	0.0000001470 lb/MMBtu	GRI Field
Acenaphthylene	0.0000	0.0000000670 lb/MMBtu	GRI Field
Biphenyl	0.0000	0.0000004730 lb/MMBtu	GRI Field
Acenaphthene	0.0000	0.0000000900 lb/MMBtu	GRI Field
Fluorene	0.0000	0.0000000800 lb/MMBtu	GRI Field
Anthracene	0.0000	0.0000000870 lb/MMBtu	GRI Field
Phenanthrene	0.0000	0.0000000600 lb/MMBtu	GRI Field
Fluoranthene	0.0000	0.0000000900 lb/MMBtu	GRI Field
Pyrene	0.0000	0.0000000830 lb/MMBtu	GRI Field

Benz(a)anthracene	0.0000	0.0000000870	lb/MMBtu	GRI Field
Chrysene	0.0000	0.0000001170	lb/MMBtu	GRI Field
Benzo(a)pyrene	0.0000	0.0000000700	lb/MMBtu	GRI Field
Benzo(b)fluoranthene	0.0000	0.0000001500	lb/MMBtu	GRI Field
Benzo(k)fluoranthene	0.0000	0.0000007600	lb/MMBtu	GRI Field
Benzo(g,h,i)perylene	0.0000	0.0000002600	lb/MMBtu	GRI Field
Indeno(1,2,3-c,d)pyrene	0.0000	0.0000001200	lb/MMBtu	GRI Field
Dibenz(a,h)anthracene	0.0000	0.0000001030	lb/MMBtu	GRI Field
Lead	0.0000	0.0000004902	lb/MMBtu	EPA
Total	0.4848			

Criteria Pollutants

VOC	0.1814	0.0053921569	lb/MMBtu	EPA
PM	0.2506	0.0074509804	lb/MMBtu	EPA
PM, Condensible	0.1880	0.0055882353	lb/MMBtu	EPA
PM, Filterable	0.0627	0.0018627451	lb/MMBtu	EPA
CO	1.0887	0.0323636360	lb/MMBtu	GRI Field
NMHC	0.2869	0.0085294118	lb/MMBtu	EPA
NOx	3.2635	0.0970167730	lb/MMBtu	GRI Field
SO2	0.0198	0.0005880000	lb/MMBtu	EPA

Other Pollutants

Dichlorobenzene	0.0000	0.0000011765	lb/MMBtu	EPA
Methane	0.3539	0.0105212610	lb/MMBtu	GRI Field
Acetylene	0.4709	0.0140000000	lb/MMBtu	GRI Field
Ethylene	0.0319	0.0009476310	lb/MMBtu	GRI Field
Ethane	0.0885	0.0026312210	lb/MMBtu	GRI Field
Propylene	0.0789	0.0023454550	lb/MMBtu	GRI Field
Propane	0.0359	0.0010686280	lb/MMBtu	GRI Field
Isobutane	0.0492	0.0014640770	lb/MMBtu	GRI Field
Butane	0.0463	0.0013766990	lb/MMBtu	GRI Field
Cyclopentane	0.0380	0.0011304940	lb/MMBtu	GRI Field
Pentane	0.1166	0.0034671850	lb/MMBtu	GRI Field
n-Pentane	0.0478	0.0014221310	lb/MMBtu	GRI Field
Cyclohexane	0.0309	0.0009183830	lb/MMBtu	GRI Field
Methylcyclohexane	0.0740	0.0022011420	lb/MMBtu	GRI Field
n-Octane	0.0960	0.0028538830	lb/MMBtu	GRI Field
1,2,3-Trimethylbenzene	0.1151	0.0034224540	lb/MMBtu	GRI Field
1,2,4-Trimethylbenzene	0.1151	0.0034224540	lb/MMBtu	GRI Field
1,3,5-Trimethylbenzene	0.1151	0.0034224540	lb/MMBtu	GRI Field
n-Nonane	0.1231	0.0036604170	lb/MMBtu	GRI Field
CO2	3,957.4588	117.6470588235	lb/MMBtu	EPA

Supporting Information: Unit 49

Solar Turbines

A Caterpillar Company

PREDICTED EMISSION PERFORMANCE

Customer: El Paso New Mexico	Engine Model: TAURUS 60-7000S CS/MD 59F MATCH SOLONOX RETROFIT
Job ID:	Fuel Type: SD NATURAL GAS — Water Injection: NO
Inquiry Number:	Engine Emissions Data: REV. 0.1 — Engines Tested: 0
Run By: Anthony M Jones — Date Run: 29-Jul-03	

	NOx EMISSIONS Nominal	NOx EMISSIONS Maximum	CO EMISSIONS Nominal	CO EMISSIONS Maximum	UHC EMISSIONS Nominal	UHC EMISSIONS Maximum
1 — 6039 Hp 100.0% Load — Elev. 6020 ft — Rel. Humidity 60.0% — Temperature 0 Deg. F						
PPMvd at 15% O2	*	42.00	*	50.00	*	25.00
ton/yr	*	34.91	*	25.30	*	7.24
lbm/MMBtu (Fuel LHV)	*	0.168	*	0.122	*	0.035
lbm/(MW-hr)	*	1.77	*	1.28	*	0.37
(gas turbine shaft pwr) lbm/hr	*	7.97	*	5.78	*	1.65
2 — 5721 Hp 100.0% Load — Elev. 6020 ft — Rel. Humidity 60.0% — Temperature 32.0 Deg. F						
PPMvd at 15% O2	*	42.00	*	50.00	*	25.00
ton/yr	*	33.48	*	24.26	*	6.95
lbm/MMBtu (Fuel LHV)	*	0.168	*	0.122	*	0.035
lbm/(MW-hr)	*	1.79	*	1.30	*	0.37
(gas turbine shaft pwr) lbm/hr	*	7.64	*	5.54	*	1.59
3 — 5425 Hp 100.0% Load — Elev. 6020 ft — Rel. Humidity 60.0% — Temperature 59.0 Deg. F						
PPMvd at 15% O2	*	42.00	*	50.00	*	25.00
ton/yr	*	32.10	*	23.26	*	6.66
lbm/MMBtu (Fuel LHV)	*	0.167	*	0.121	*	0.035
lbm/(MW-hr)	*	1.81	*	1.31	*	0.38
(gas turbine shaft pwr) lbm/hr	*	7.33	*	5.31	*	1.52

Important Notes

1. For short-term emission limits such as lbs/hr., Solar recommends using "worst case" anticipated operating conditions specific to the application and the site conditions. Worst case for one pollutant is not necessarily the same for another. The emission values on this form are only predicted emissions at the specific operating conditions listed.
2. Solar's typical SoLoNOx warranty is for greater than 0 deg F, and between 50% and 100% load for gas fuel, and between 80% and 100% load for liquid fuel. An emission warranty for non-SoLoNOx equipment is for greater than 0 deg F and between 80% and 100% load.
3. Fuel must meet Solar standard fuel specification ES 9-98. Predicted emissions are based on the attached fuel composition, or, San Diego natural gas or equivalent.
4. If needed, Solar can provide generic documents to address turbine operation outside typical warranty ranges, as well as non-warranted emissions of SO2, PM10/2.5, VOC, and formaldehyde.
5. Solar can optionally provide factory testing in San Diego to ensure the actual unit(s) meet the above values within the tolerances quoted. Pricing and schedule impact will be provided upon request.

Solar Turbines

A Caterpillar Company

PREDICTED EMISSION PERFORMANCE

Customer: El Paso New Mexico	Engine Model: TAURUS 60-7000S CS/MD 59F MATCH SOLONOX RETROFIT
Job ID:	Fuel Type: SD NATURAL GAS — Water Injection: NO
Inquiry Number:	Engine Emissions Data: REV. 0.1 — Engines Tested: 0
Run By: Anthony M Jones — Date Run: 29-Jul-03	

4	5002 Hp 100.0% Load	Elev. 6020 ft	Rel. Humidity 60.0%	Temperature 75.0 Deg. F
	NOx EMISSIONS Nominal	NOx EMISSIONS Maximum	CO EMISSIONS Nominal	CO EMISSIONS Maximum	UHC EMISSIONS Nominal	UHC EMISSIONS Maximum
PPMvd at 15% O2	*	42.00	*	50.00	*	25.00
ton/yr	*	30.08	*	21.80	*	6.24
lbm/MMBtu (Fuel LHV)	*	0.166	*	0.120	*	0.034
lbm/(MW-hr) (gas turbine shaft pwr)	*	1.84	*	1.33	*	0.38
lbm/hr	*	6.87	*	4.98	*	1.43

Important Notes

1. For short-term emission limits such as lbs/hr., Solar recommends using "worst case" anticipated operating conditions specific to the application and the site conditions. Worst case for one pollutant is not necessarily the same for another. The emission values on this form are only predicted emissions at the specific operating conditions listed.
2. Solar's typical SoLoNOx warranty is for greater than 0 deg F, and between 50% and 100% load for gas fuel, and between 80% and 100% load for liquid fuel. An emission warranty for non-SoLoNOx equipment is for greater than 0 deg F and between 80% and 100% load.
3. Fuel must meet Solar standard fuel specification ES 9-98. Predicted emissions are based on the attached fuel composition, or, San Diego natural gas or equivalent.
4. If needed, Solar can provide generic documents to address turbine operation outside typical warranty ranges, as well as non-warranted emissions of SO2, PM10/2.5, VOC, and formaldehyde.
5. Solar can optionally provide factory testing in San Diego to ensure the actual unit(s) meet the above values within the tolerances quoted. Pricing and schedule impact will be provided upon request.

Solar Turbines

A Caterpillar Company

PREDICTED ENGINE PERFORMANCE

Customer: *El Paso New Mexico*	Model: TAURUS 60-7000S
Job ID:	Package Type: CS/MD
Run By: Anthony M Jones	Match: 59F MATCH
Date Run: 29-Jul-03	Fuel System: GAS
Engine Performance Code: REV. 3.23	Fuel Type: SD NATURAL GAS
Engine Performance Data: REV. 0.2	

DATA FOR NOMINAL PERFORMANCE

Elevation	feet	6020
Inlet Loss	in H20	3.0
Exhaust Loss	in H20	3.0
Accessory on GP Shaft	HP	14.0

		1	2	3	4
Engine Inlet Temperature	deg F	0	32.0	59.0	75.0
Relative Humidity	%	60.0	60.0	60.0	60.0
Driven Equipment Speed	RPM	13544	13474	13407	13286
Specified Load	HP	FULL	FULL	FULL	FULL
Net Output Power	HP	6039	5721	5425	5002
Fuel Flow	mmBtu/hr	47.32	45.48	43.82	41.32
Heat Rate	Btu/HP-hr	7836	7950	8078	8260
Therm Eff	%	32.48	32.01	31.50	30.81
Engine Exhaust Flow	lbm/hr	146704	140112	134284	127241
Exhaust Temperature	deg F	842	877	906	919

Fuel Gas Composition (Volume Percent)	CH4	92.79	C2H6	4.16	C3H8	0.84	C4	0.18	C5	0.04	C6	0.04
	CO2	0.44	H2S	0.0001	N2	1.51						
Fuel Gas Properties	LHV (Btu/Scf)	939.2	Specific Gravity	0.5970	Wobbe Index at 60F	1215.6						

Unit Number: 49
Hours of Operation: 8,760 Yearly
Rated Horsepower: 6,039 hp
Fuel Type: NATURAL GAS
Emission Factor Set: FIELD > EPA > LITERATURE
Additional EF Set: -NONE-

Calculated Emissions

Chemical Name	Emissions (ton/yr)	Emission Factor	EF Set
HAPs			
PAHs	0.0006	0.0000097000 g/bhp-hr	EPA
Formaldehyde	0.9868	0.0169368000 g/bhp-hr	GRI Field
Acetaldehyde	1.0100	0.0173357000 g/bhp-hr	GRI Field
1,3-Butadiene	0.0036	0.0000616000 g/bhp-hr	GRI Field
Acrolein	0.0151	0.0002600000 g/bhp-hr	GRI Field
Propional	0.0504	0.0008650000 g/bhp-hr	GRI Field
Propylene Oxide	0.0074	0.0001273000 g/bhp-hr	EPA
Benzene	0.0314	0.0005384000 g/bhp-hr	GRI Field
Toluene	0.0239	0.0004110000 g/bhp-hr	GRI Field
Ethylbenzene	0.0082	0.0001405000 g/bhp-hr	EPA
Xylenes(m,p,o)	0.0725	0.0012441000 g/bhp-hr	GRI Field
2,2,4-Trimethylpentane	0.0935	0.0016053000 g/bhp-hr	GRI Field
n-Hexane	0.0877	0.0015058000 g/bhp-hr	GRI Field
Phenol	0.0064	0.0001101000 g/bhp-hr	GRI Field
Naphthalene	0.0004	0.0000076000 g/bhp-hr	GRI Field
2-Methylnaphthalene	0.0001	0.0000013000 g/bhp-hr	GRI Field
Biphenyl	0.0193	0.0003305000 g/bhp-hr	GRI Field
Phenanthrene	0.0000	0.0000005000 g/bhp-hr	GRI Field
Chrysene	0.0001	0.0000010000 g/bhp-hr	GRI Field
Beryllium	0.0000	0.0000001000 g/bhp-hr	GRI Field
Phosphorus	0.0038	0.0000652000 g/bhp-hr	GRI Field
Chromium	0.0005	0.0000082000 g/bhp-hr	GRI Field
Manganese	0.0010	0.0000175000 g/bhp-hr	GRI Field
Nickel	0.0004	0.0000061000 g/bhp-hr	GRI Field
Cobalt	0.0001	0.0000016000 g/bhp-hr	GRI Field
Arsenic	0.0000	0.0000006000 g/bhp-hr	GRI Field
Selenium	0.0000	0.0000003000 g/bhp-hr	GRI Field
Cadmium	0.0000	0.0000002000 g/bhp-hr	GRI Field
Mercury	0.0002	0.0000027000 g/bhp-hr	GRI Field
Lead	0.0002	0.0000034000 g/bhp-hr	GRI Field
Total HAPs:	2.4236		
Criteria Pollutants			
PM	1.6880	0.0289720000 g/bhp-hr	EPA
CO	122.8323	2.1082842000 g/bhp-hr	GRI Field
NMHC	11.2957	0.1938780000 g/bhp-hr	GRI Field
NMEHC	0.5371	0.0092184000 g/bhp-hr	EPA
NOx	72.9532	1.2521629000 g/bhp-hr	GRI Field

SO2	0.0598	0.0010272000 g/bhp-hr	GRI Field
Other Pollutants			
Methane	57.5155	0.9871923000 g/bhp-hr	GRI Field
Acetylene	0.4175	0.0071654000 g/bhp-hr	GRI Field
Ethylene	0.8130	0.0139545000 g/bhp-hr	GRI Field
Ethane	8.7441	0.1500837000 g/bhp-hr	GRI Field
Propane	0.9322	0.0160000000 g/bhp-hr	GRI Field
Isobutane	0.2797	0.0048000000 g/bhp-hr	GRI Field
Butane	0.3030	0.0052000000 g/bhp-hr	GRI Field
Cyclopentane	0.0962	0.0016511000 g/bhp-hr	GRI Field
Butyrald/Isobutyraldehyde	0.0781	0.0013400000 g/bhp-hr	GRI Field
n-Pentane	4.7279	0.0811500000 g/bhp-hr	GRI Field
Cyclohexane	0.3568	0.0061240000 g/bhp-hr	GRI Field
Methylcyclohexane	0.5145	0.0088312000 g/bhp-hr	GRI Field
n-Octane	0.1858	0.0031889000 g/bhp-hr	GRI Field
1,3,5-Trimethylbenzene	0.1748	0.0030000000 g/bhp-hr	GRI Field
n-Nonane	0.0310	0.0005326000 g/bhp-hr	GRI Field
CO2	28,132.6073	482.8660778000 g/bhp-hr	EPA
Vanadium	0.0000	0.0000007000 g/bhp-hr	GRI Field
Copper	0.0012	0.0000205000 g/bhp-hr	GRI Field
Molybdenum	0.0012	0.0000203000 g/bhp-hr	GRI Field
Barium	0.0013	0.0000229000 g/bhp-hr	GRI Field

Supporting Information: Unit 50

CATERPILLAR®

Gas Petroleum Engine

G3612

3195-3550 bhp
2383-2647 bkW
900-1000 rpm

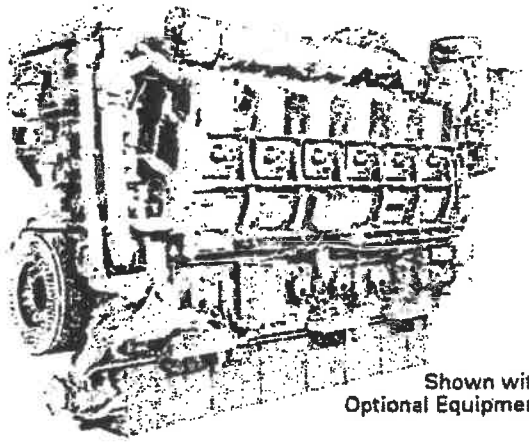

Shown with Optional Equipment

CATERPILLAR® ENGINE SPECIFICATIONS

V-12, 4-Stroke-Cycle
Bore — in (mm) 11.8 (300)
Stroke — in (mm)..... 11.8 (300)
Displacement — cu in (L)..... 15,528 (254.4)
Aspiration..... Turbocharged and Aftercooled
Capacity for Liquids — U.S. gal (L)
Jacket Water Circuit[1]..... 177 (669)
Aftercooler Circuit[1]..... 17 (64)
Lube Oil System (refill) 272 (1030)
Package Shipping Weight
(Dry) — lb (kg)..... 55,300 (25 084)

[1]Engine only

FEATURES

- **FULL RANGE OF ATTACHMENTS**
  - Wide range of bolt-on system expansion attachments, factory designed and tested
- **UNMATCHED PRODUCT SUPPORT OFFERED THROUGH WORLDWIDE CATERPILLAR DEALER NETWORK**
  - More than 1,500 dealer outlets
  - Caterpillar factory-trained dealer technicians service every aspect of your petroleum engine
  - 99.7% of parts orders filled within 24 hours — worldwide
  - Caterpillar parts and labor warranty
  - Preventive maintenance agreements available for "repair before failure" options
  - Scheduled Oil Sampling (S•O•S℠) program matches your oil sample against Caterpillar set standards to determine:
    - internal engine component condition
    - presence of unwanted fluids
    - presence of combustion by-products
- **SINGLE-SOURCE SUPPLIER**
  - Caterpillar:
    - casts engine blocks, heads, cylinder liners, and flywheel housings
    - machines critical components
    - assembles complete engine

    Ownership of these manufacturing processes enables Caterpillar to produce high quality, dependable product.
  - Factory-designed systems built at Caterpillar ISO certified facilities
- **G3612**
  - Low emissions
  - Broad operating speed range and ability to burn a wide spectrum of gaseous fuels
  - Caterpillar Advanced Digital Engine Management (ADEM III) control system with detonation-sensitive timing control for individual cylinders
  - Robust diesel strength design provides prolonged life and lower owning and operating costs.
- **TESTING**
  - Prototype testing on every model:
    - proves computer design
    - verifies system torsional stability
    - functionality tests every model
  - Every Caterpillar engine is dynamometer tested under full load to ensure proper engine performance.
- **WEB SITE**
  - For additional information on all your petroleum power requirements, visit www.cat-oilandgas.com.

CATERPILLAR FACILITIES ISO 9001 CERTIFIED

CE

FACTORY INSTALLED STANDARD & OPTIONAL EQUIPMENT

SYSTEM	STANDARD	OPTIONAL
Air Inlet	Air cleaner — standard-duty Inlet air adapter	Heavy-duty air cleaner with precleaners Heavy-duty air cleaner with rain protection
Charging System		Charging alternators
Control System	Caterpillar ADEM III control system provides electronic governing integrated with air/fuel ratio control and individual cylinder ignition timing control	Custom control system software is available for non-standard ratings. Software is field programmable using flash memory.
Cooling System	Jacket water pump Jacket water thermostats and housing Aftercooler pump Aftercooler water thermostats and housing Single-stage aftercooler	Expansion tank Flexible connections Jacket water heater
Exhaust System	Dry wrapped exhaust manifolds Vertical outlet adapter	Flexible bellows adapters Exhaust expander Weld flanges
Flywheel/ Flywheel Housing	SAE No. 00 flywheel SAE No. 00 flywheel housing SAE standard rotation	
Fuel System	Gas admission valves with electronically controlled fuel supply pressure	Fuel filter Gas pressure regulator Flexible connection Low energy fuel system Corrosive gas fuel system
Ignition System	ADEM III control system senses individual cylinder detonation and controls individual cylinder timing	CSA certification
Instrumentation	LCD display panel monitors engine parameters and displays diagnostic codes	Remote data monitoring and speed control Compatible with Cat Electronic Technician (ET) and Data View Customer Communication Module (CCM) Display panel deletion is optional
Lube System	Crankcase breathers (top mounted) Oil cooler Oil filter Oil pan drain valve	Air or electric motor-driven prelube Duplex oil filter LH or RH service Lube oil makeup system
Mounting System	Engine mounting feet (six total)	Mounting plates (set of six)
Power Take-Offs		Front stub shafts
Protection	Electronic shutoff system with purge cycle Crankcase explosion relief valves Gas shutoff valve	
Starting System	Air starting system	Air pressure reducing valve Natural gas starting system
General	Paint, Caterpillar yellow Vibration dampers	Engine barring device Damper guard

TECHNICAL DATA

G3612 Gas Petroleum Engine — 900-1000 rpm

		DM5312-00	DM5310-00
Engine Power			
@ 100% Load	bhp (bkW)	3195 (2383)	3550 (2647)
@ 75% Load	bhp (bkW)	2397 (1787)	2662 (1985)
Engine Speed	rpm	900	1000
SCAC Temperature	°F (°C)	130 (54)	130 (54)
Compression Ratio		9.0:1	9.0:1
Emissions*			
NO_x	g/bhp-hr	0.70	0.70
CO	g/bhp-hr	2.50	2.50
Total Hydrocarbons	g/bhp-hr	5.85	6.15
Fuel Consumption			
@ 100% Load	Btu/bhp-hr (MJ/bkW-hr)	6,570 (9.30)	6,760 (9.57)
@ 75% Load	Btu/bhp-hr (MJ/bkW-hr)	6,805 (9.63)	7,050 (9.98)
Heat Balance			
Heat Rejection to Jacket Water			
@ 100% Load	Btu/mn (bkW)	32,168 (566)	36,195 (636)
@ 75% Load	Btu/mn (bkW)	28,721 (505)	31,271 (550)
Heat Rejection to Aftercooler			
@ 100% Load	Btu/mn (bkW)	21,222 (373)	26,509 (466)
@ 75% Load	Btu/mn (bkW)	9,333 (164)	14,525 (255)
Heat Rejection to Exhaust			
@ 100% Load	Btu/mn (bkW)	134,721 (2369)	154,673 (2720)
@ 75% Load	Btu/mn (bkW)	107,091 (1883)	123,759 (2176)
Exhaust System			
Exhaust Gas Flow Rate			
@ 100% Load	cfm (m^3/min)	20,634 (584)	23,461 (664)
@ 75% Load	cfm (m^3/min)	16,100 (456)	18,554 (525)
Exhaust Stack Temperature			
@ 100% Load	°F (°C)	846 (452)	858 (459)
@ 75% Load	°F (°C)	867 (464)	878 (470)
Intake System			
Air Inlet Flow Rate			
@ 100% Load	cfm (m^3/min)	8,527 (241)	9,598 (272)
@ 75% Load	cfm (m^3/min)	6,542 (185)	7,477 (212)
Gas Pressure	psi (kPa)	43 (295)	43 (295)

*at 100% load and speed

GAS PETROLEUM ENGINE

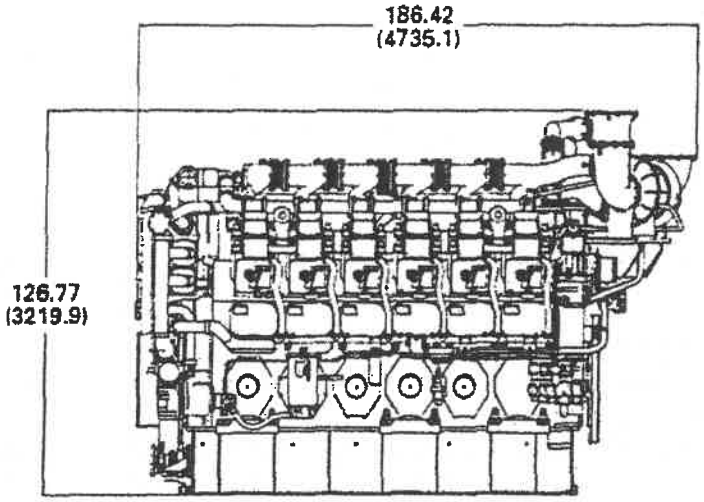

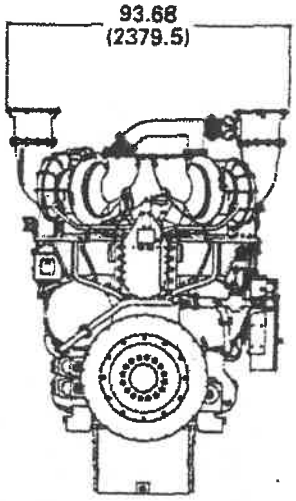

DIMENSIONS		
Length	in (mm)	186.42 (4735.1)
Width	in (mm)	93.68 (2379.5)
Height	in (mm)	126.77 (3219.9)
Shipping Weight	lb (kg)	55,300 (25 084)

Note: General configuration not to be used for installation. See general dimension drawings for detail.

RATING DEFINITIONS AND CONDITIONS

Engine performance is obtained in accordance with SAE J1995, ISO3046/1, BS5514/1, and DIN6271/1 standards.

Transient response data is acquired from an engine/generator combination at normal operating temperature and in accordance with ISO3046/1 standard ambient conditions. Also in accordance with SAE J1995, BS5514/1, and DIN6271/1 standard reference conditions.

Conditions: Power for gas engines is based on fuel having an LHV of 905 Btu/cu ft (33.74 kJ/L) at 29.91 in. Hg (101 kPa) and 59° F (15° C). Fuel rate is based on a cubic meter at 29.61 in. Hg (100 kPa) and 60.1° F (15.6° C). Air flow is based on a cubic foot at 29.61 in. Hg (100 kPa) and 77° F (25° C). Exhaust flow is based on a cubic foot at 29.61 in. Hg (100 kPa) and stack temperature.

TMI Reference No.: DM5312-00, DM5310-00
Materials and specifications are subject to change without notice.

The International System of Units (SI) is used in this publication.

LEHW0814-01 (9-01)

Printed in U.S.A.

©2001 Caterpillar
All rights reserved.

G3612

GAS ENGINE TECHNICAL DATA

CATERPILLAR®

Industrial/Petroleum 07/01

ENGINE SPEED (rpm):	1000	FUEL TYPE:	Nat Gas
COMPRESSION RATIO:	9:1	MIN. FUEL PRESSURE (PSIG):	43
AFTERCOOLER WATER (°F)	129	MIN. RATED METHANE NUMBER:	66
JACKET WATER OUTLET (°F)	190	RATED ALTITUDE @ 77°F (ft):	5000
IGNITION SYSTEM:	DST	FUEL LHV (BTU/SCF):	905
EXHAUST MANIFOLD:	DRY		

RATING		NOTES	LOAD	100%	75%	50%
ENGINE POWER		(1) (2)	bhp	3550	2662	1775
ENGINE EFFICIENCY	(ISO 3046/1)	(1)	%	38.6	37.0	34.1
ENGINE EFFICIENCY	(NOMINAL)	(1)	%	37.6	36.1	33.3

ENGINE DATA						
FUEL CONSUMPTION	(ISO 3046/1)	(1)	BTU/bhp-hr	6601	6884	7468
FUEL CONSUMPTION	(NOMINAL)	(1)	BTU/bhp-hr	6761	7051	7650
AIR FLOW (@ 77°F, 13.9 psia)			ft3/min	9,623	7,384	5,051
AIR MASS FLOW			lb/hr	40,345	30,958	21,175
COMPRESSOR OUTLET PRESSURE			psi (abs)	36.4	28.4	20.4
COMPRESSOR OUTLET TEMPERATURE			°F	300	248	154
INLET MANIFOLD PRESSURE			psi (abs)	35.1	27.3	18.7
INLET MANIFOLD TEMPERATURE			°F	147	144	140
LAMBDA				2.07	2.03	1.92
TIMING			°BTDC	18.3	17.6	16.2
EXHAUST STACK TEMPERATURE			°F	858	896	946
EXHAUST GAS FLOW (@ stack temp, 14.5 psia)			ft3/min	24,273	19,160	13,592
EXHAUST GAS MASS FLOW			lb/hr	41,575	31,901	21,820

EMISSIONS						
NOx (as NO)		(3)	g/bhp-hr	0.7	0.7	0.7
CO		(3)	g/bhp-hr	2.5	2.5	2.5
THC (molecular weight of 15.84)		(3)	g/bhp-hr	6.15	6.31	6.5
NMHC (molecular weight of 15.84)		(3)	g/bhp-hr	0.93	0.95	0.98
EXHAUST OXYGEN			%	12.5	11.8	10.7

ENERGY BALANCE DATA						
FUEL INPUT ENERGY (LHV)	(NOMINAL)	(1)	BTU/min	399,965	312,844	226,312
WORK ENERGY	(NOMINAL)	(2)	BTU/min	150,544	112,908	75,272
HEAT REJ. TO JACKET WATER	(NOMINAL)	(4)	BTU/min	36,431	31,107	29,390
HEAT REJ. TO ATMOSPHERE	(NOMINAL)	(5)	BTU/min	13,999	13,139	12,447
HEAT REJ. TO LUBE OIL	(NOMINAL)	(6)	BTU/min	17,998	17,206	16,973
HEAT REJ. TO EXH. (LHV to 77°F)	(NOMINAL)	(4)	BTU/min	154,449	124,159	90,239
HEAT REJ. TO EXH. (LHV to 350°F)	(NOMINAL)	(4)	BTU/min	93,314	77,170	57,985
HEAT REJ. TO AFTERCOOLER	(NOMINAL)	(7) (8)	BTU/min	26,544	14,324	1,990

CONDITIONS AND DEFINITIONS

ENGINE RATING OBTAINED AND PRESENTED IN ACCORDANCE WITH ISO 3046/1 (STD. REF. CONDITIONS OF 25°C, 100 KPA). NO OVERLOAD PERMITTED AT RATING SHOWN. CONSULT ALTITUDE CURVES FOR APPLICATIONS ABOVE MAXIMUM RATED ALTITUDE AND/OR TEMPERATURE.

NOTES

1) FUEL CONSUMPTION TOLERANCE. ISO 3046/1 IS 0, + 5% OF FULL LOAD DATA. NOMINAL IS ± 2.5 % OF FULL LOAD DATA.
2) ENGINE POWER AND WORK ENERGY INCLUDE 2 ENGINE DRIVEN WATER PUMPS.
3) EMISSION DATA SHOWN ARE DRY AND NOT TO EXCEED VALUES.
4) HEAT REJECTION TO JACKET AND EXHAUST TOLERANCE IS ± 10% OF FULL LOAD DATA. (heat rate based on treated water)
5) HEAT REJECTION TO ATMOSPHERE TOLERANCE IS ± 50% OF FULL LOAD DATA. (heat rate based on treated water)
6) HEAT REJECTION TO LUBE OIL TOLERANCE IS ± 20% OF FULL LOAD DATA. (heat rate based on treated water)
7) HEAT REJECTION TO AFTERCOOLER TOLERANCE IS ± 5% OF FULL LOAD DATA. (heat rate based on treated water)
8) TOTAL AFTERCOOLER HEAT = AFTERCOOLER HEAT x ACHRF (heat rate based on treated water)

DM5310-01

G3612

GAS ENGINE TECHNICAL DATA

CATERPILLAR®

FUEL USAGE GUIDE

DERATE FACTOR vs CATERPILLAR METHANE NUMBER

Methane Number	30	35	40	45	50	55	60	65	70>=100
Rating Factor	0.00	0.00	0.00	0.76	0.82	0.87	0.93	0.98	1.00

Minimum Methane Number for Full Rating = 66.3

Fuel System Limit (minimum Wobbe Index) = 1128 BTU/SCF

TOTAL DERATION FACTORS - ALTITUDE & COOLING

AIR TO TURBO (°F)	0	1000	2000	3000	4000	5000	6000	7000	8000	9000	10000	11000	12000
130	0.93	0.89	0.85	0.81	0.78	0.74	0.71	0.68	0.65	0.61	0.58	0.56	0.53
120	0.98	0.94	0.90	0.86	0.82	0.79	0.75	0.72	0.68	0.65	0.62	0.59	0.56
110	1.00	1.00	0.95	0.91	0.87	0.83	0.80	0.76	0.73	0.69	0.66	0.63	0.60
100	1.00	1.00	1.00	0.97	0.93	0.89	0.85	0.81	0.77	0.73	0.70	0.67	0.63
90	1.00	1.00	1.00	1.00	0.98	0.94	0.90	0.86	0.82	0.78	0.74	0.71	0.67
80	1.00	1.00	1.00	1.00	1.00	0.99	0.95	0.91	0.87	0.83	0.79	0.75	0.72
70	1.00	1.00	1.00	1.00	1.00	1.00	0.97	0.94	0.90	0.86	0.83	0.80	0.76
60	1.00	1.00	1.00	1.00	1.00	1.00	0.99	0.95	0.92	0.88	0.85	0.81	0.78
50	1.00	1.00	1.00	1.00	1.00	1.00	1.00	0.97	0.94	0.90	0.86	0.83	0.79

ALTITUDE (FEET ABOVE SEA LEVEL)

AFTERCOOLER HEAT REJECTION FACTORS

AIR TO TURBO (°F)	0	1000	2000	3000	4000	5000	6000	7000	8000	9000	10000	11000	12000
130	1.42	1.49	1.56	1.63	1.70	1.77	1.77	1.77	1.77	1.77	1.77	1.77	1.77
120	1.34	1.40	1.47	1.54	1.61	1.68	1.68	1.68	1.68	1.68	1.68	1.68	1.68
110	1.25	1.32	1.38	1.45	1.52	1.59	1.59	1.59	1.59	1.59	1.59	1.59	1.59
100	1.17	1.23	1.30	1.36	1.43	1.50	1.50	1.50	1.50	1.50	1.50	1.50	1.50
90	1.08	1.14	1.21	1.27	1.34	1.41	1.41	1.41	1.41	1.41	1.41	1.41	1.41
80	1.00	1.06	1.12	1.18	1.25	1.31	1.31	1.31	1.31	1.31	1.31	1.31	1.31
70	1.00	1.00	1.03	1.09	1.16	1.22	1.22	1.22	1.22	1.22	1.22	1.22	1.22
60	1.00	1.00	1.00	1.00	1.07	1.13	1.13	1.13	1.13	1.13	1.13	1.13	1.13
50	1.00	1.00	1.00	1.00	1.00	1.04	1.04	1.04	1.04	1.04	1.04	1.04	1.04

ALTITUDE (FEET ABOVE SEA LEVEL)

MINIMUM SPEED CAPABILITY AT MAX SITE TORQUE (RPM)

AIR TO TURBO (°F)	0	1000	2000	3000	4000	5000	6000	7000	8000	9000	10000	11000	12000
130	760	780	800	850	850	850	850	850	850	850	850	850	850
120	760	770	790	850	850	850	850	850	850	850	850	850	850
110	750	770	780	800	850	850	850	850	850	850	850	850	850
100	750	760	770	790	850	850	850	850	850	850	850	850	850
90	750	750	770	780	800	850	850	850	850	850	850	850	850
80	750	750	760	770	790	850	850	850	850	850	850	850	850
70	750	750	750	770	780	800	850	850	850	850	850	850	850
60	750	750	750	760	770	790	850	850	850	850	850	850	850
50	750	750	750	750	770	780	800	850	850	850	850	850	850

ALTITUDE (FEET ABOVE SEA LEVEL)

ALLOWABLE INERTS IN THE FUEL:
The maximum amount of free inerts in the fuel is limited to 5%.

FUEL SYSTEM LIMIT:
Fuels with a Wobbe index lower than the limit, require a custom fuel system and engine control system mapping from the factory. The Wobbe index is determined using the Caterpillar Methane Number Calculation program.

FUEL USAGE GUIDE:
This table shows the derate factor required for a given fuel. Note that deration occurs as the methane number decreases. Methane number is a scale to measure detonation characteristics of various fuels. The methane number of a fuel is determined by using the Caterpillar Methane Number Calculation program.

TOTAL DERATION FACTORS:
This table shows the deration required for various air inlet temperatures and altitudes. Use this information along with the fuel usage guide chart to help determine actual engine power for your site. The total deration factor includes deration due to altitude and ambient temperature, and air inlet manifold temperature deration.

ACTUAL ENGINE RATING
It is important to note that the Altitude/Temperature deration and the Fuel Usage Guide deration are not cumulative. They are not to be added together. To determine the actual power available, take the lowest rating between the Altitude/Temperature Deration and the Fuel Usage Guide Deration.

AFTERCOOLER HEAT REJECTION FACTORS:
Aftercooler heat rejection is given for standard conditions of 77°F and 500 ft altitude. To maintain a constant air inlet manifold temperature, as the air to turbo temperature goes up, so must the heat rejection. As altitude increases, the turbocharger must work harder to overcome the lower atmospheric pressure. This increases the amount of heat that must be removed from the inlet air by the aftercooler. Use the aftercooler heat rejection factor to adjust for ambient and altitude conditions. Multiply this factor by the standard aftercooler heat rejection. Failure to properly account for these factors could result in detonation and cause the engine to shutdown or fail.

MINIMUM SPEED CAPABILITY AT MAX SITE TORQUE
This table shows the minimum allowable engine operating speed for site-specific ratings as determined by the Total Deration Factor chart. The minimum allowable engine operating speed cannot be lowered even if the actual engine power falls below the site-specific rating allowed by the Total Deration Factor chart. Turbocharger compressor surge or damage will result if the engine is operated lower than the minimum allowable speed.

Supporting Information: Unit 51

Table 1.4-1. EMISSION FACTORS FOR NITROGEN OXIDES (NO_x) AND CARBON MONOXIDE (CO) FROM NATURAL GAS COMBUSTION[a]

Combustor Type (MMBtu/hr Heat Input) [SCC]	NO_x[b]		CO	
	Emission Factor ($lb/10^6$ scf)	Emission Factor Rating	Emission Factor ($lb/10^6$ scf)	Emission Factor Rating
Large Wall-Fired Boilers (>100) [1-01-006-01, 1-02-006-01, 1-03-006-01]				
Uncontrolled (Pre-NSPS)[c]	280	A	84	B
Uncontrolled (Post-NSPS)[c]	190	A	84	B
Controlled - Low NO_x burners	140	A	84	B
Controlled - Flue gas recirculation	100	D	84	B
Small Boilers (<100) [1-01-006-02, 1-02-006-02, 1-03-006-02, 1-03-006-03]				
Uncontrolled	100	B	84	B
Controlled - Low NO_x burners	50	D	84	B
Controlled - Low NO_x burners/Flue gas recirculation	32	C	84	B
Tangential-Fired Boilers (All Sizes) [1-01-006-04]				
Uncontrolled	170	A	24	C
Controlled - Flue gas recirculation	76	D	98	D
Residential Furnaces (<0.3) [No SCC]				
Uncontrolled	94	B	40	B

[a] Reference 11. Units are in pounds of pollutant per million standard cubic feet of natural gas fired. To convert from $lb/10^6$ scf to $kg/10^6 m^3$, multiply by 16. Emission factors are based on an average natural gas higher heating value of 1,020 Btu/scf. To convert from $lb/10^6$ scf to lb/MMBtu, divide by 1,020. The emission factors in this table may be converted to other natural gas heating values by multiplying the given emission factor by the ratio of the specified heating value to this average heating value. SCC = Source Classification Code. ND = no data. NA = not applicable.

[b] Expressed as NO_2. For large and small wall fired boilers with SNCR control, apply a 24 percent reduction to the appropriate NO_x emission factor. For tangential-fired boilers with SNCR control, apply a 13 percent reduction to the appropriate NO_x emission factor.

[c] NSPS=New Source Performance Standard as defined in 40 CFR 60 Subparts D and Db. Post-NSPS units are boilers with greater than 250 MMBtu/hr of heat input that commenced construction modification, or reconstruction after August 17, 1971, and units with heat input capacit ies between 100 and 250 MMBtu/hr that commenced construction modification, or reconstruction after June 19, 1984.

TABLE 1.4-2. EMISSION FACTORS FOR CRITERIA POLLUTANTS AND GREENHOUSE GASES FROM NATURAL GAS COMBUSTION[a]

Pollutant	Emission Factor ($lb/10^6$ scf)	Emission Factor Rating
CO_2[b]	120,000	A
Lead	0.0005	D
N_2O (Uncontrolled)	2.2	E
N_2O (Controlled-low-NO_X burner)	0.64	E
PM (Total)[c]	7.6	D
PM (Condensable)[c]	5.7	D
PM (Filterable)[c]	1.9	B
SO_2[d]	0.6	A
TOC	11	B
Methane	2.3	B
VOC	5.5	C

[a] Reference 11. Units are in pounds of pollutant per million standard cubic feet of natural gas fired. Data are for all natural gas combustion sources. To convert from $lb/10^6$ scf to $kg/10^6$ m^3, multiply by 16. To convert from $lb/10^6$ scf to 1b/MMBtu, divide by 1,020. The emission factors in this table may be converted to other natural gas heating values by multiplying the given emission factor by the ratio of the specified heating value to this average heating value. TOC = Total Organic Compounds. VOC = Volatile Organic Compounds.

[b] Based on approximately 100% conversion of fuel carbon to CO_2. $CO_2[lb/10^6 \text{ scf}] = (3.67)(CON)(C)(D)$, where CON = fractional conversion of fuel carbon to CO_2, C = carbon content of fuel by weight (0.76), and D = density of fuel, 4.2×10^4 $lb/10^6$ scf.

[c] All PM (total, condensible, and filterable) is assumed to be less than 1.0 micrometer in diameter. Therefore, the PM emission factors presented here may be used to estimate PM_{10}, $PM_{2.5}$ or PM_1 emissions. Total PM is the sum of the filterable PM and condensible PM. Condensible PM is the particulate matter collected using EPA Method 202 (or equivalent). Filterable PM is the particulate matter collected on, or prior to, the filter of an EPA Method 5 (or equivalent) sampling train.

[d] Based on 100% conversion of fuel sulfur to SO_2. Assumes sulfur content is natural gas of 2,000 grains/10^6 scf. The SO_2 emission factor in this table can be converted to other natural gas sulfur contents by multiplying the SO_2 emission factor by the ratio of the site-specific sulfur content (grains/10^6 scf) to 2,000 grains/10^6 scf.

Criteria Pollutants

VOC	0.1814	0.0053921569 lb/mmbtu	EPA
PM	0.2506	0.0074509804 lb/mmbtu	EPA
PM, Condensible	0.1880	0.0055882353 lb/mmbtu	EPA
PM, Filterable	0.0627	0.0018627451 lb/mmbtu	EPA
CO	1.0887	0.0323636360 lb/mmbtu	GRI Field
NMHC	0.2869	0.0085294118 lb/mmbtu	EPA
NOx	3.2635	0.0970167730 lb/mmbtu	GRI Field
SO2	0.0198	0.0005880000 lb/mmbtu	EPA

Other Pollutants

Dichlorobenzene	0.0000	0.0000011765 lb/mmbtu	EPA
Methane	0.3539	0.0105212610 lb/mmbtu	GRI Field
Acetylene	0.4709	0.0140000000 lb/mmbtu	GRI Field
Ethylene	0.0319	0.0009476310 lb/mmbtu	GRI Field
Ethane	0.0885	0.0026312210 lb/mmbtu	GRI Field
Propylene	0.0789	0.0023454550 lb/mmbtu	GRI Field
Propane	0.0359	0.0010686280 lb/mmbtu	GRI Field
Isobutane	0.0492	0.0014640770 lb/mmbtu	GRI Field
Butane	0.0463	0.0013766990 lb/mmbtu	GRI Field
Cyclopentane	0.0380	0.0011304940 lb/mmbtu	GRI Field
Pentane	0.1166	0.0034671850 lb/mmbtu	GRI Field
n-Pentane	0.0478	0.0014221310 lb/mmbtu	GRI Field
Cyclohexane	0.0309	0.0009183830 lb/mmbtu	GRI Field
Methylcyclohexane	0.0740	0.0022011420 lb/mmbtu	GRI Field
n-Octane	0.0960	0.0028538830 lb/mmbtu	GRI Field
1,2,3-Trimethylbenzene	0.1151	0.0034224540 lb/mmbtu	GRI Field
1,2,4-Trimethylbenzene	0.1151	0.0034224540 lb/mmbtu	GRI Field
1,3,5-Trimethylbenzene	0.1151	0.0034224540 lb/mmbtu	GRI Field
n-Nonane	0.1231	0.0036604170 lb/mmbtu	GRI Field
CO2	3,957.4588	117.6470588235 lb/mmbtu	EPA

Unit Number: 51A
Hours of Operation: 8,760 Yearly
Heat Input: 5.22 MMBtu/hr
Fuel Type: NATURAL GAS
Device Type: HEATER
Emission Factor Set: FIELD > EPA > LITERATURE
Additional EF Set: -NONE-

Calculated Emissions

Chemical Name	Emissions (ton/yr)	Emission Factor	EF Set
HAPs			
3-Methylcholanthrene	0.0000	0.0000000018 lb/mmbtu	EPA
7,12-Dimethylbenz(a)anthr	0.0000	0.0000000157 lb/mmbtu	EPA
Formaldehyde	0.0193	0.0008440090 lb/mmbtu	GRI Field
Methanol	0.0220	0.0009636360 lb/mmbtu	GRI Field
Acetaldehyde	0.0169	0.0007375920 lb/mmbtu	GRI Field

1,3-Butadiene	0.0078	0.0003423350 lb/mmbtu	GRI Field
Benzene	0.0171	0.0007480470 lb/mmbtu	GRI Field
Toluene	0.0232	0.0010163310 lb/mmbtu	GRI Field
Ethylbenzene	0.0483	0.0021128220 lb/mmbtu	GRI Field
Xylenes(m,p,o)	0.0302	0.0013205140 lb/mmbtu	GRI Field
2,2,4-Trimethylpentane	0.0650	0.0028417580 lb/mmbtu	GRI Field
n-Hexane	0.0322	0.0014070660 lb/mmbtu	GRI Field
Phenol	0.0000	0.0000001070 lb/mmbtu	GRI Field
Styrene	0.0475	0.0020788960 lb/mmbtu	GRI Field
Naphthalene	0.0000	0.0000005100 lb/mmbtu	GRI Field
2-Methylnaphthalene	0.0000	0.0000001470 lb/mmbtu	GRI Field
Acenaphthylene	0.0000	0.0000000670 lb/mmbtu	GRI Field
Biphenyl	0.0000	0.0000004730 lb/mmbtu	GRI Field
Acenaphthene	0.0000	0.0000000900 lb/mmbtu	GRI Field
Fluorene	0.0000	0.0000000800 lb/mmbtu	GRI Field
Anthracene	0.0000	0.0000000870 lb/mmbtu	GRI Field
Phenanthrene	0.0000	0.0000000600 lb/mmbtu	GRI Field
Fluoranthene	0.0000	0.0000000900 lb/mmbtu	GRI Field
Pyrene	0.0000	0.0000000830 lb/mmbtu	GRI Field
Benz(a)anthracene	0.0000	0.0000000870 lb/mmbtu	GRI Field
Chrysene	0.0000	0.0000001170 lb/mmbtu	GRI Field
Benzo(a)pyrene	0.0000	0.0000000700 lb/mmbtu	GRI Field
Benzo(b)fluoranthene	0.0000	0.0000001500 lb/mmbtu	GRI Field
Benzo(k)fluoranthene	0.0000	0.0000007600 lb/mmbtu	GRI Field
Benzo(g,h,i)perylene	0.0000	0.0000002600 lb/mmbtu	GRI Field
Indeno(1,2,3-c,d)pyrene	0.0000	0.0000001200 lb/mmbtu	GRI Field
Dibenz(a,h)anthracene	0.0000	0.0000001030 lb/mmbtu	GRI Field
Lead	0.0000	0.0000004902 lb/mmbtu	EPA
Total HAPs:	0.3296		

Criteria Pollutants

VOC	0.1233	0.0053921569 lb/mmbtu	EPA
PM	0.1704	0.0074509804 lb/mmbtu	EPA
PM, Condensible	0.1278	0.0055882353 lb/mmbtu	EPA
PM, Filterable	0.0426	0.0018627451 lb/mmbtu	EPA
CO	0.7399	0.0323636360 lb/mmbtu	GRI Field
NMHC	0.1950	0.0085294118 lb/mmbtu	EPA
NOx	2.2182	0.0970167730 lb/mmbtu	GRI Field
SO2	0.0134	0.0005880000 lb/mmbtu	EPA

Other Pollutants

Dichlorobenzene	0.0000	0.0000011765 lb/mmbtu	EPA
Methane	0.2406	0.0105212610 lb/mmbtu	GRI Field
Acetylene	0.3201	0.0140000000 lb/mmbtu	GRI Field
Ethylene	0.0217	0.0009476310 lb/mmbtu	GRI Field
Ethane	0.0602	0.0026312210 lb/mmbtu	GRI Field
Propylene	0.0536	0.0023454550 lb/mmbtu	GRI Field
Propane	0.0244	0.0010686280 lb/mmbtu	GRI Field
Isobutane	0.0335	0.0014640770 lb/mmbtu	GRI Field
Butane	0.0315	0.0013766990 lb/mmbtu	GRI Field
Cyclopentane	0.0258	0.0011304940 lb/mmbtu	GRI Field

Pentane	0.0793	0.0034671850	lb/mmbtu	GRI Field
n-Pentane	0.0325	0.0014221310	lb/mmbtu	GRI Field
Cyclohexane	0.0210	0.0009183830	lb/mmbtu	GRI Field
Methylcyclohexane	0.0503	0.0022011420	lb/mmbtu	GRI Field
n-Octane	0.0653	0.0028538830	lb/mmbtu	GRI Field
1,2,3-Trimethylbenzene	0.0782	0.0034224540	lb/mmbtu	GRI Field
1,2,4-Trimethylbenzene	0.0782	0.0034224540	lb/mmbtu	GRI Field
1,3,5-Trimethylbenzene	0.0782	0.0034224540	lb/mmbtu	GRI Field
n-Nonane	0.0837	0.0036604170	lb/mmbtu	GRI Field
CO2	2,689.8353	117.6470588235	lb/mmbtu	EPA

Varian Star Chromatography Workstation

El Paso Field Services
Natural Gas Analysis Report

Run File C:\STAR\DATA\CHACO CRYO INLET 12-11-03\CHACO CRYO INLET .RUN

Method C:\Star\El Paso2.mth
Operator JL
Analysis Date 12/12/2003
Temp. 59 F
Press. 944
Sampled on 12-11-2003 by Bob I. Heath @13:31

Component	Mole %	GPM
CO2	1.42	0.00
N2	0.38	0.00
C1	85.83	0.00
C2	7.04	1.88
C3	3.00	0.83
IC4	0.54	0.18
NC4	0.82	0.26
IC5	0.32	0.12
NC5	0.25	0.09
C6+	0.41	0.18
	100.00	3.52

Relative Density from Composition	0.676	
Unnormalized Mole %	100.03	
BTUs @ 14.73 Saturated	1,140.89	
BTUs @ 14.73 Dry	1,160.81	Corrected for (1/Z)
Compressibility (Z)	0.9970	

12/12/2003

Gas Sample caught 12-11-03
85° F 815 psig

El Paso Field Services - Chaco Natural Gas Processing Plant

Dehydrator Inlet Gas Analysis C6+ Breakdown

Component	Mole%
Carbon Dioxide	1.42
Nitrogen	0.38
Methane	85.83
Ethane	7.04
Propane	3.00
Isobutane	0.54
n-Butane	0.82
Isopentane	0.32
n-Pentane	0.25
Other Hexanes	0.2618
n-Hexane	0.0606
Heptane	0.0282
2,2,4-Trimethylpentane	0.0109
Octanes+	0.0197
Benzene	0.0136
Toluene	0.0117
Ethylbenzene	0.0006
Xylenes	0.0030
Total	100

The analysis of the dehydrator gas gives the following C6+ concentration:

Component	Total Mole%
C6+	0.41

The C6+ components were broken down by using GLYCalc default composition for the production industry by multiplying the GLYCalc fraction of each component by the total C6+ fraction.

Compound	Production Conversion Factors*	Species Calculations (Mole%)**
Other Hexanes	0.6385	0.2618
n-Hexane	0.1479	0.0606
Heptane	0.0687	0.0282
2,2,4-Trimethylpentane	0.0267	0.0109
Octanes+	0.0480	0.0197
Benzene	0.0331	0.0136
Toluene	0.0285	0.0117
Ethylbenzene	0.0014	0.0006
Xylenes	0.0072	0.0030
Total		0.4100

* From GRI-GLYCalc Table 7-4.

** Mole% = Conversion Factor * Total Mole%

Lumped C6+ Natural Gas Analysis

When an extended gas analysis is not available, the C6+composition must be estimated. The following table lists suggested breakdowns of the C6+ group of compounds for production, transmission (pipeline), and storage field glycol dehydrators. These compositions are based on sampling data from more than 80 gas streams. Keep in mind that these estimates are averages and actual values can vary significantly.

Estimates of C6+ Component Split for Natural Gas Analysis

	Industry Segment		
Compound	**Production**	**Transmission**	**Storage**
Other Hexanes	0.6385	0.6440	0.5319
n-Hexane	0.1479	0.1883	0.1913
Heptane	0.0687	0.0816	0.1002
2,2,4-Trimethylpentane	0.0267	0.0111	0.0103
Octanes +	0.0480	0.0504	0.1241
Benzene	0.0331	0.0121	0.0205
Toluene	0.0285	0.0081	0.0159
Ethylbenzene	0.0014	0.0005	0.0011
Xylenes (m,p,o)	0.0072	0.0040	0.0046

To convert a C6+ analysis for use in GRI-GLYCalc, multiply the total C6+ concentration by the fraction of each component from the appropriate industry segment. For example, to estimate the benzene concentration of a gas sample from a production dehydrator when the laboratory reports a C6+ concentration of 1 mol%, multiply 1 mol% by 0.0331 to get 0.0331 mol% (331 ppmv).

GRI-GLYCalc VERSION 4.0 - SUMMARY OF INPUT VALUES

Case Name: Chaco Natural Gas Processing Plant
File Name: C:\Program Files\GRI-GLYCalc4\Chacodehy.ddf
Date: December 18, 2003

DESCRIPTION:

Description: Inlet glycol dehydrator with condenser, flash tank, recycle and recompression

Annual Hours of Operation: 8760.0 hours/yr

WET GAS:

Temperature: 85.00 deg. F
Pressure: 815.00 psig
Wet Gas Water Content: Saturated

Component	Conc. (vol %)
Carbon Dioxide	1.4200
Nitrogen	0.3800
Methane	85.8300
Ethane	7.0400
Propane	3.0000
Isobutane	0.5400
n-Butane	0.8200
Isopentane	0.3200
n-Pentane	0.2500
n-Hexane	0.0606
Other Hexanes	0.2618
Heptanes	0.0282
2,2,4-Trimethylpentane	0.0109
Benzene	0.0136
Toluene	0.0117
Ethylbenzene	0.0006
Xylenes	0.0030
C8+ Heavies	0.0197

DRY GAS:

Flow Rate: 700.0 MMSCF/day
Water Content: 7.0 lbs. H2O/MMSCF

LEAN GLYCOL:

Glycol Type: TEG
Water Content: 1.5 wt% H2O
Recirculation Ratio: 3.0 gal/lb H2O

PUMP:

Glycol Pump Type: Electric/Pneumatic

FLASH TANK:

Flash Control: Recycle/recompression
Temperature: 120.0 deg. F
Pressure: 15.0 psig

REGENERATOR OVERHEADS CONTROL DEVICE:

Control Device: Condenser
Temperature: 80.0 deg. F
Pressure: 13.0 psia

GRI-GLYCalc VERSION 4.0 - AGGREGATE CALCULATIONS REPORT

Case Name: Chaco Natural Gas Processing Plant
File Name: C:\Program Files\GRI-GLYCalc4\Chacodehy.ddf
Date: December 18, 2003

DESCRIPTION:

Description: Inlet glycol dehydrator with condenser, flash tank, recycle and recompression

Annual Hours of Operation: 8760.0 hours/yr

EMISSIONS REPORTS:

CONTROLLED REGENERATOR EMISSIONS

Component	lbs/hr	lbs/day	tons/yr
Methane	1.7540	42.097	7.6827
Ethane	2.7112	65.068	11.8750
Propane	5.0199	120.479	21.9874
Isobutane	1.8368	44.084	8.0454
n-Butane	3.7756	90.614	16.5370
Isopentane	1.0205	24.491	4.4696
n-Pentane	1.3057	31.337	5.7189
n-Hexane	0.2927	7.025	1.2821
Other Hexanes	1.2316	29.559	5.3945
Heptanes	0.1240	2.975	0.5430
2,2,4-Trimethylpentane	0.0195	0.468	0.0855
Benzene	2.5400	60.960	11.1253
Toluene	1.1987	28.769	5.2504
Ethylbenzene	0.0284	0.681	0.1243
Xylenes	0.1462	3.508	0.6402
C8+ Heavies	0.0018	0.043	0.0079
Total Emissions	23.0066	552.159	100.7690
Total Hydrocarbon Emissions	23.0066	552.159	100.7690
Total VOC Emissions	18.5414	444.994	81.2114
Total HAP Emissions	4.2255	101.412	18.5077
Total BTEX Emissions	3.9133	93.918	17.1401

UNCONTROLLED REGENERATOR EMISSIONS

Component	lbs/hr	lbs/day	tons/yr
Methane	1.7701	42.482	7.7529
Ethane	2.8409	68.182	12.4432
Propane	6.3852	153.244	27.9670
Isobutane	2.9504	70.809	12.9226
n-Butane	7.3207	175.698	32.0649
Isopentane	3.9281	94.275	17.2052
n-Pentane	4.5850	110.040	20.0822
n-Hexane	3.0217	72.521	13.2350
Other Hexanes	8.5808	205.939	37.5838
Heptanes	3.9349	94.438	17.2349

2,2,4-Trimethylpentane	0.5521	13.252	2.4184
Benzene	48.4239	1162.173	212.0965
Toluene	71.8799	1725.118	314.8340
Ethylbenzene	5.6137	134.728	24.5878
Xylenes	39.7400	953.760	174.0611
C8+ Heavies	16.0501	385.202	70.2993
Total Emissions	227.5774	5461.857	996.7889
Total Hydrocarbon Emissions	227.5774	5461.857	996.7889
Total VOC Emissions	222.9664	5351.193	976.5928
Total HAP Emissions	169.2312	4061.550	741.2329
Total BTEX Emissions	165.6574	3975.778	725.5794

FLASH GAS EMISSIONS

Note: Flash Gas Emissions are zero with the Recycle/recompression control option.

FLASH TANK OFF GAS

Component	lbs/hr	lbs/day	tons/yr
Methane	71.2416	1709.799	312.0383
Ethane	32.6184	782.842	142.8687
Propane	30.7864	738.875	134.8446
Isobutane	9.2911	222.986	40.6949
n-Butane	17.3729	416.950	76.0935
Isopentane	8.0258	192.619	35.1530
n-Pentane	7.5024	180.057	32.8604
n-Hexane	2.6881	64.513	11.7737
Other Hexanes	10.1844	244.426	44.6077
Heptanes	1.6924	40.617	7.4125
2,2,4-Trimethylpentane	0.4785	11.485	2.0960
Benzene	1.4320	34.368	6.2722
Toluene	1.3453	32.288	5.8925
Ethylbenzene	0.0593	1.424	0.2598
Xylenes	0.2827	6.784	1.2381
C8+ Heavies	0.5993	14.383	2.6249
Total Emissions	195.6006	4694.415	856.7307
Total Hydrocarbon Emissions	195.6006	4694.415	856.7307
Total VOC Emissions	91.7406	2201.774	401.8237
Total HAP Emissions	6.2859	150.861	27.5322
Total BTEX Emissions	3.1193	74.863	13.6626

EQUIPMENT REPORTS:

CONDENSER

Condenser Outlet Temperature: 80.00 deg. F

Condenser Pressure:	13.00	psia
Condenser Duty:	9.60e-001	MM BTU/hr
Hydrocarbon Recovery:	16.45	bbls/day
Produced Water:	80.61	bbls/day
VOC Control Efficiency:	91.68	%
HAP Control Efficiency:	97.50	%
BTEX Control Efficiency:	97.64	%
Dissolved Hydrocarbons in Water:	742.87	mg/L

Component	Emitted	Condensed
Water	0.05%	99.95%
Carbon Dioxide	93.53%	6.47%
Nitrogen	98.39%	1.61%
Methane	99.09%	0.91%
Ethane	95.43%	4.57%
Propane	78.62%	21.38%
Isobutane	62.26%	37.74%
n-Butane	51.57%	48.43%
Isopentane	25.98%	74.02%
n-Pentane	28.48%	71.52%
n-Hexane	9.69%	90.31%
Other Hexanes	14.35%	85.65%
Heptanes	3.15%	96.85%
2,2,4-Trimethylpentane	3.53%	96.47%
Benzene	5.25%	94.75%
Toluene	1.67%	98.33%
Ethylbenzene	0.51%	99.49%
Xylenes	0.37%	99.63%
C8+ Heavies	0.01%	99.99%

ABSORBER

NOTE: Because the Calculated Absorber Stages was below the minimum allowed, GRI-GLYCalc has set the number of Absorber Stages to 1.25 and has calculated a revised Dry Gas Dew Point.

Calculated Absorber Stages:	1.25	
Calculated Dry Gas Dew Point:	3.32	lbs. H2O/MMSCF
Temperature:	85.0	deg. F
Pressure:	815.0	psig
Dry Gas Flow Rate:	700.0000	MMSCF/day
Glycol Losses with Dry Gas:	4.8210	lb/hr
Wet Gas Water Content:	Saturated	
Calculated Wet Gas Water Content:	43.61	lbs. H2O/MMSCF
Specified Lean Glycol Recirc. Ratio:	3.00	gal/lb H2O

Component	Remaining in Dry Gas	Absorbed in Glycol
Water	7.60%	92.40%
Carbon Dioxide	99.90%	0.10%
Nitrogen	99.99%	0.01%
Methane	99.99%	0.01%
Ethane	99.98%	0.02%
Propane	99.96%	0.04%
Isobutane	99.95%	0.05%
n-Butane	99.93%	0.07%
Isopentane	99.93%	0.07%

n-Pentane	99.91%	0.09%
n-Hexane	99.86%	0.14%
Other Hexanes	99.89%	0.11%
Heptanes	99.74%	0.26%
2,2,4-Trimethylpentane	99.89%	0.11%
Benzene	93.89%	6.11%
Toluene	91.16%	8.84%
Ethylbenzene	88.41%	11.59%
Xylenes	83.65%	16.35%
C8+ Heavies	99.35%	0.65%

FLASH TANK

Flash Control: Recycle/recompression
Flash Temperature: 120.0 deg. F
Flash Pressure: 15.0 psig

Component	Left in Glycol	Removed in Flash Gas
Water	99.94%	0.06%
Carbon Dioxide	24.08%	75.92%
Nitrogen	2.30%	97.70%
Methane	2.42%	97.58%
Ethane	8.01%	91.99%
Propane	17.18%	82.82%
Isobutane	24.10%	75.90%
n-Butane	29.65%	70.35%
Isopentane	33.20%	66.80%
n-Pentane	38.24%	61.76%
n-Hexane	53.16%	46.84%
Other Hexanes	46.27%	53.73%
Heptanes	70.08%	29.92%
2,2,4-Trimethylpentane	54.27%	45.73%
Benzene	97.27%	2.73%
Toluene	98.31%	1.69%
Ethylbenzene	99.06%	0.94%
Xylenes	99.39%	0.61%
C8+ Heavies	96.83%	3.17%

REGENERATOR

No Stripping Gas used in regenerator.

Component	Remaining in Glycol	Distilled Overhead
Water	27.71%	72.29%
Carbon Dioxide	0.00%	100.00%
Nitrogen	0.00%	100.00%
Methane	0.00%	100.00%
Ethane	0.00%	100.00%
Propane	0.00%	100.00%
Isobutane	0.00%	100.00%
n-Butane	0.00%	100.00%
Isopentane	1.51%	98.49%

n-Pentane	1.31%	98.69%
n-Hexane	0.94%	99.06%
Other Hexanes	2.16%	97.84%
Heptanes	0.71%	99.29%
2,2,4-Trimethylpentane	2.76%	97.24%
Benzene	5.14%	94.86%
Toluene	8.04%	91.96%
Ethylbenzene	10.51%	89.49%
Xylenes	13.02%	86.98%
C8+ Heavies	12.42%	87.58%

STREAM REPORTS:

WET GAS STREAM

Temperature: 85.00 deg. F
Pressure: 829.70 psia
Flow Rate: 2.92e+007 scfh

Component	Conc. (vol%)	Loading (lb/hr)
Water	9.19e-002	1.27e+003
Carbon Dioxide	1.42e+000	4.80e+004
Nitrogen	3.80e-001	8.18e+003
Methane	8.57e+001	1.06e+006
Ethane	7.03e+000	1.63e+005
Propane	3.00e+000	1.02e+005
Isobutane	5.39e-001	2.41e+004
n-Butane	8.19e-001	3.66e+004
Isopentane	3.20e-001	1.77e+004
n-Pentane	2.50e-001	1.39e+004
n-Hexane	6.05e-002	4.01e+003
Other Hexanes	2.62e-001	1.73e+004
Heptanes	2.82e-002	2.17e+003
2,2,4-Trimethylpentane	1.09e-002	9.57e+002
Benzene	1.36e-002	8.17e+002
Toluene	1.17e-002	8.29e+002
Ethylbenzene	5.99e-004	4.90e+001
Xylenes	3.00e-003	2.45e+002
C8+ Heavies	1.97e-002	2.58e+003
Total Components	100.00	1.50e+006

DRY GAS STREAM

Temperature: 85.00 deg. F
Pressure: 829.70 psia
Flow Rate: 2.92e+007 scfh

Component	Conc. (vol%)	Loading (lb/hr)
Water	6.99e-003	9.68e+001
Carbon Dioxide	1.42e+000	4.80e+004

Nitrogen	3.80e-001	8.18e+003
Methane	8.58e+001	1.06e+006
Ethane	7.04e+000	1.63e+005
Propane	3.00e+000	1.02e+005
Isobutane	5.40e-001	2.41e+004
n-Butane	8.19e-001	3.66e+004
Isopentane	3.20e-001	1.77e+004
n-Pentane	2.50e-001	1.39e+004
n-Hexane	6.05e-002	4.01e+003
Other Hexanes	2.62e-001	1.73e+004
Heptanes	2.81e-002	2.17e+003
2,2,4-Trimethylpentane	1.09e-002	9.56e+002
Benzene	1.28e-002	7.67e+002
Toluene	1.07e-002	7.55e+002
Ethylbenzene	5.30e-004	4.33e+001
Xylenes	2.51e-003	2.05e+002
C8+ Heavies	1.96e-002	2.56e+003
Total Components	100.00	1.50e+006

LEAN GLYCOL STREAM

Temperature: 85.00 deg. F
Flow Rate: 5.34e+001 gpm

Component	Conc. (wt%)	Loading (lb/hr)
TEG	9.84e+001	2.96e+004
Water	1.50e+000	4.51e+002
Carbon Dioxide	1.63e-011	4.89e-009
Nitrogen	2.10e-013	6.31e-011
Methane	8.17e-018	2.45e-015
Ethane	5.57e-008	1.67e-005
Propane	5.04e-009	1.51e-006
Isobutane	1.22e-009	3.67e-007
n-Butane	2.04e-009	6.12e-007
Isopentane	2.00e-004	6.01e-002
n-Pentane	2.02e-004	6.07e-002
n-Hexane	9.55e-005	2.87e-002
Other Hexanes	6.31e-004	1.90e-001
Heptanes	9.41e-005	2.83e-002
2,2,4-Trimethylpentane	5.23e-005	1.57e-002
Benzene	8.74e-003	2.62e+000
Toluene	2.09e-002	6.29e+000
Ethylbenzene	2.20e-003	6.59e-001
Xylenes	1.98e-002	5.95e+000
C8+ Heavies	7.58e-003	2.28e+000
Total Components	100.00	3.00e+004

RICH GLYCOL STREAM

Temperature: 85.00 deg. F
Pressure: 829.70 psia
Flow Rate: 5.67e+001 gpm
NOTE: Stream has more than one phase.

Component	Conc. (wt%)	Loading (lb/hr)
TEG	9.33e+001	2.96e+004
Water	5.14e+000	1.63e+003
Carbon Dioxide	1.54e-001	4.89e+001
Nitrogen	1.99e-003	6.31e-001
Methane	2.30e-001	7.30e+001
Ethane	1.12e-001	3.55e+001
Propane	1.17e-001	3.72e+001
Isobutane	3.86e-002	1.22e+001
n-Butane	7.80e-002	2.47e+001
Isopentane	3.79e-002	1.20e+001
n-Pentane	3.84e-002	1.21e+001
n-Hexane	1.81e-002	5.74e+000
Other Hexanes	5.98e-002	1.90e+001
Heptanes	1.79e-002	5.66e+000
2,2,4-Trimethylpentane	3.30e-003	1.05e+000
Benzene	1.66e-001	5.25e+001
Toluene	2.51e-001	7.95e+001
Ethylbenzene	2.00e-002	6.33e+000
Xylenes	1.45e-001	4.60e+001
C8+ Heavies	5.98e-002	1.89e+001
Total Components	100.00	3.17e+004

FLASH TANK OFF GAS STREAM

Temperature: 120.00 deg. F
Pressure: 29.70 psia
Flow Rate: 3.05e+003 scfh

Component	Conc. (vol%)	Loading (lb/hr)
Water	7.15e-001	1.03e+000
Carbon Dioxide	1.05e+001	3.71e+001
Nitrogen	2.74e-001	6.16e-001
Methane	5.53e+001	7.12e+001
Ethane	1.35e+001	3.26e+001
Propane	8.69e+000	3.08e+001
Isobutane	1.99e+000	9.29e+000
n-Butane	3.72e+000	1.74e+001
Isopentane	1.39e+000	8.03e+000
n-Pentane	1.29e+000	7.50e+000
n-Hexane	3.88e-001	2.69e+000
Other Hexanes	1.47e+000	1.02e+001
Heptanes	2.10e-001	1.69e+000
2,2,4-Trimethylpentane	5.22e-002	4.79e-001
Benzene	2.28e-001	1.43e+000
Toluene	1.82e-001	1.35e+000
Ethylbenzene	6.96e-003	5.93e-002
Xylenes	3.32e-002	2.83e-001
C8+ Heavies	4.38e-002	5.99e-001
Total Components	100.00	2.34e+002

FLASH TANK GLYCOL STREAM

Temperature: 120.00 deg. F
Flow Rate: 5.62e+001 gpm

Component	Conc. (wt%)	Loading (lb/hr)
TEG	9.40e+001	2.96e+004
Water	5.17e+000	1.63e+003
Carbon Dioxide	3.74e-002	1.18e+001
Nitrogen	4.61e-005	1.45e-002
Methane	5.63e-003	1.77e+000
Ethane	9.04e-003	2.84e+000
Propane	2.03e-002	6.39e+000
Isobutane	9.38e-003	2.95e+000
n-Butane	2.33e-002	7.32e+000
Isopentane	1.27e-002	3.99e+000
n-Pentane	1.48e-002	4.65e+000
n-Hexane	9.70e-003	3.05e+000
Other Hexanes	2.79e-002	8.77e+000
Heptanes	1.26e-002	3.96e+000
2,2,4-Trimethylpentane	1.81e-003	5.68e-001
Benzene	1.62e-001	5.10e+001
Toluene	2.49e-001	7.82e+001
Ethylbenzene	2.00e-002	6.27e+000
Xylenes	1.45e-001	4.57e+001
C8+ Heavies	5.83e-002	1.83e+001
Total Components	100.00	3.14e+004

FLASH GAS EMISSIONS

Control Method: Recycle/recompression
Control Efficiency: 100.00

Note: Flash Gas Emissions are zero with the Recycle/recompression control option.

REGENERATOR OVERHEADS STREAM

Temperature: 212.00 deg. F
Pressure: 14.70 psia
Flow Rate: 2.59e+004 scfh

Component	Conc. (vol%)	Loading (lb/hr)
Water	9.56e+001	1.18e+003
Carbon Dioxide	3.92e-001	1.18e+001
Nitrogen	7.57e-004	1.45e-002
Methane	1.62e-001	1.77e+000
Ethane	1.38e-001	2.84e+000
Propane	2.12e-001	6.39e+000
Isobutane	7.43e-002	2.95e+000
n-Butane	1.84e-001	7.32e+000
Isopentane	7.97e-002	3.93e+000
n-Pentane	9.31e-002	4.58e+000
n-Hexane	5.13e-002	3.02e+000
Other Hexanes	1.46e-001	8.58e+000

Heptanes	5.75e-002	3.93e+000
2,2,4-Trimethylpentane	7.08e-003	5.52e-001
Benzene	9.08e-001	4.84e+001
Toluene	1.14e+000	7.19e+001
Ethylbenzene	7.74e-002	5.61e+000
Xylenes	5.48e-001	3.97e+001
C8+ Heavies	1.38e-001	1.61e+001
Total Components	100.00	1.42e+003

CONDENSER VENT GAS STREAM

Temperature: 80.00 deg. F
Pressure: 13.00 psia
Flow Rate: 3.00e+002 scfh

Component	Conc. (vol%)	Loading (lb/hr)
Water	3.96e+000	5.63e-001
Carbon Dioxide	3.16e+001	1.10e+001
Nitrogen	6.44e-002	1.42e-002
Methane	1.38e+001	1.75e+000
Ethane	1.14e+001	2.71e+000
Propane	1.44e+001	5.02e+000
Isobutane	4.00e+000	1.84e+000
n-Butane	8.22e+000	3.78e+000
Isopentane	1.79e+000	1.02e+000
n-Pentane	2.29e+000	1.31e+000
n-Hexane	4.30e-001	2.93e-001
Other Hexanes	1.81e+000	1.23e+000
Heptanes	1.57e-001	1.24e-001
2,2,4-Trimethylpentane	2.16e-002	1.95e-002
Benzene	4.11e+000	2.54e+000
Toluene	1.65e+000	1.20e+000
Ethylbenzene	3.38e-002	2.84e-002
Xylenes	1.74e-001	1.46e-001
C8+ Heavies	1.34e-003	1.81e-003
Total Components	100.00	3.46e+001

CONDENSER PRODUCED WATER STREAM

Temperature: 80.00 deg. F
Flow Rate: 2.35e+000 gpm

Component	Conc. (wt%)	Loading (lb/hr)	(ppm)
Water	9.99e+001	1.18e+003	998858.
Carbon Dioxide	3.99e-002	4.70e-001	399.
Nitrogen	1.02e-006	1.21e-005	0.
Methane	2.68e-004	3.15e-003	3.
Ethane	5.38e-004	6.33e-003	5.
Propane	7.00e-004	8.24e-003	7.
Isobutane	1.47e-004	1.73e-003	1.
n-Butane	4.22e-004	4.96e-003	4.
Isopentane	8.54e-005	1.00e-003	1.
n-Pentane	1.21e-004	1.42e-003	1.

n-Hexane	2.45e-005	2.88e-004	0.
Other Hexanes	8.03e-005	9.44e-004	1.
Heptanes	6.10e-006	7.18e-005	0.
2,2,4-Trimethylpentane	6.20e-007	7.29e-006	0.
Benzene	4.84e-002	5.69e-001	484.
Toluene	2.02e-002	2.38e-001	202.
Ethylbenzene	3.87e-004	4.55e-003	4.
Xylenes	2.91e-003	3.42e-002	29.
C8+ Heavies	3.41e-008	4.01e-007	0.
Total Components	100.00	1.18e+003	1000000.

CONDENSER RECOVERED OIL STREAM

Temperature: 80.00 deg. F
Flow Rate: 4.80e-001 gpm

Component	Conc. (wt%)	Loading (lb/hr)
Water	4.10e-002	8.37e-002
Carbon Dioxide	1.43e-001	2.92e-001
Nitrogen	1.09e-004	2.22e-004
Methane	6.32e-003	1.29e-002
Ethane	6.05e-002	1.23e-001
Propane	6.65e-001	1.36e+000
Isobutane	5.45e-001	1.11e+000
n-Butane	1.73e+000	3.54e+000
Isopentane	1.42e+000	2.91e+000
n-Pentane	1.61e+000	3.28e+000
n-Hexane	1.34e+000	2.73e+000
Other Hexanes	3.60e+000	7.35e+000
Heptanes	1.87e+000	3.81e+000
2,2,4-Trimethylpentane	2.61e-001	5.33e-001
Benzene	2.22e+001	4.53e+001
Toluene	3.45e+001	7.04e+001
Ethylbenzene	2.73e+000	5.58e+000
Xylenes	1.94e+001	3.96e+001
C8+ Heavies	7.86e+000	1.60e+001
Total Components	100.00	2.04e+002

CONDENSER CONTROL CURVE DATA REPORT:

CONDENSER CONTROL EFFICIENCY CURVES

Note: Condenser curves computed for the range 40.0 F <= T <= 170.0 F. DO NOT EXTRAPOLATE BEYOND THIS RANGE!

Temp(F)	BTEX	Total HAP	VOC
40.0	99.46	99.43	95.89
45.0	99.35	99.30	95.50
50.0	99.21	99.16	95.08
55.0	99.04	98.98	94.62
60.0	98.85	98.78	94.13
65.0	98.62	98.54	93.60

70.0	98.34	98.24	93.00
75.0	98.02	97.90	92.37
80.0	97.64	97.50	91.68
85.0	97.19	97.03	90.93
90.0	96.67	96.49	90.11
95.0	96.04	95.83	89.19
100.0	95.29	95.05	88.16
105.0	94.41	94.13	87.00
110.0	93.34	93.03	85.69
115.0	92.07	91.71	84.20
120.0	90.53	90.12	82.48
125.0	88.66	88.20	80.48
130.0	86.38	85.87	78.15
135.0	83.33	82.76	75.15
140.0	79.73	79.10	71.74
145.0	75.19	74.53	67.61
150.0	69.47	68.77	62.57
155.0	62.23	61.53	56.37
160.0	53.18	52.51	48.82
165.0	42.95	42.36	40.45
170.0	30.61	30.15	30.39

Supporting Information: Units TK-28 & TK-29

TANKS 4.0.9d
Emissions Report - Summary Format
Tank Indentification and Physical Characteristics

Identification

User Identification:	TK-28 and TK-29
City:	Bloomfield
State:	New Mexico
Company:	Enterprise Field Services, LLC
Type of Tank:	Vertical Fixed Roof Tank
Description:	4,000 bbl Vertical Fixed Roof Storage Tanks

Tank Dimensions

Shell Height (ft):	26.00
Diameter (ft):	35.00
Liquid Height (ft) :	24.00
Avg. Liquid Height (ft):	14.00
Volume (gallons):	168,000.00
Turnovers:	30.00
Net Throughput(gal/yr):	5,040,000.00
Is Tank Heated (y/n):	N

Paint Characteristics

Shell Color/Shade:	White/White
Shell Condition	Good
Roof Color/Shade:	White/White
Roof Condition:	Good

Roof Characteristics

Type:	Cone
Height (ft)	0.00
Slope (ft/ft) (Cone Roof)	0.06

Breather Vent Settings

Vacuum Settings (psig):	-1.00
Pressure Settings (psig)	1.00

Meterological Data used in Emissions Calculations: Pueblo, Colorado (Avg Atmospheric Pressure = 12.4 psia)

TANKS 4.0.9d
Emissions Report - Summary Format
Liquid Contents of Storage Tank

TK-28 and TK-29 - Vertical Fixed Roof Tank
Bloomfield, New Mexico

Mixture/Component	Month	Daily Liquid Surf. Temperature (deg F) Avg.	Min.	Max.	Liquid Bulk Temp (deg F)	Vapor Pressure (psia) Avg.	Min.	Max.	Vapor Mol. Weight.	Liquid Mass Fract.	Vapor Mass Fract.	Mol. Weight	Basis for Vapor Pressure Calculations
Natrual Gas Condensate	All	54.85	47.26	62.45	52.74	8.8218	7.7974	9.9450	58.0000			93.93	Option 4: RVP=12
2,2,4-Trimethylpentane						0.5127	0.4080	0.6390	114.2300	0.0010	0.0001	114.23	Option 2: A=6.8118, B=1257.84, C=220.74
Benzene						1.0108	0.8113	1.2494	78.1100	0.0117	0.0022	78.11	Option 2: A=6.905, B=1211.033, C=220.79
Ethylbenzene						0.0905	0.0687	0.1181	106.1700	0.0018	0.0000	106.17	Option 2: A=6.975, B=1424.255, C=213.21
Hexane (-n)						1.6709	1.3598	2.0385	86.1700	0.0592	0.0182	86.17	Option 2: A=6.876, B=1171.17, C=224.41
Toluene						0.2807	0.2193	0.3561	92.1300	0.0352	0.0018	92.13	Option 2: A=6.954, B=1344.8, C=219.48
Unidentified Components						9.8603	9.8259	9.8263	57.5736	0.8890	0.9777	94.76	
Xylene (-o)						0.0589	0.0443	0.0775	106.1700	0.0022	0.0000	106.17	Option 2: A=6.998, B=1474.679, C=213.69

TANKS 4.0.9d
Emissions Report - Summary Format
Individual Tank Emission Totals

Emissions Report for: Annual

TK-28 and TK-29 - Vertical Fixed Roof Tank
Bloomfield, New Mexico

	Losses(lbs)		
Components	Working Loss	Breathing Loss	Total Emissions
Natrual Gas Condensate	46,049.88	5,953.40	52,003.28
Hexane (-n)	836.81	108.18	944.99
Benzene	99.80	12.90	112.71
Toluene	83.43	10.79	94.22
Ethylbenzene	1.34	0.17	1.51
Xylene (-o)	1.08	0.14	1.22
2,2,4-Trimethylpentane	4.51	0.58	5.09
Unidentified Components	45,022.91	5,820.64	50,843.55

Certificate of Analysis

Number: 2030-14080152-001A

Carencro Laboratory
4790 NE Evangeline Thruway
Carencro, LA 70520

Rene Garcia Reyes
Envirotech, Inc
5796 US Highway 64
Farmington, NM 87401

Aug. 26, 2014

Field:	Chaco Plant	Sampled By:	TM-Envirotech
Station Name:	Trunk Rack	Sample Of:	Liquid Spot
Station Number:		Sample Date:	08/08/2014
Sample Point:		Sample Conditions:	
Analyzed:	08/26/2014 13:09:00	Method:	GPA-2186M/GPA-2103

Analytical Data

Components	Mol. %	MW	Wt. %	Sp. Gravity	L.V. %
Nitrogen	NIL	28.013	NIL	0.807	NIL
Methane	0.006	16.043	0.001	0.300	0.002
Carbon Dioxide	NIL	44.010	NIL	0.817	NIL
Ethane	0.081	30.069	0.026	0.356	0.053
Propane	1.474	44.096	0.692	0.507	0.974
Iso-Butane	2.077	58.122	1.285	0.563	1.630
n-Butane	6.132	58.122	3.794	0.584	4.636
Iso-Pentane	6.097	72.149	4.683	0.625	5.347
n-Pentane	6.464	72.149	4.965	0.631	5.619
i-Hexanes	8.275	84.585	7.451	0.669	7.947
n-Hexane	5.924	86.175	5.435	0.664	5.842
2,2,4-Trimethylpentane	0.104	114.231	0.126	0.697	0.129
Benzene	1.168	78.114	0.971	0.885	0.783
Heptanes	22.848	93.709	22.793	0.724	22.474
Toluene	3.516	92.141	3.449	0.872	2.822
Octanes	16.464	106.985	18.751	0.743	18.012
Ethylbenzene	0.175	106.167	0.198	0.872	0.162
Xylenes	0.217	106.167	0.245	0.885	0.198
Nonanes	3.719	123.938	4.910	0.753	4.657
Decanes Plus	15.259	124.525	20.225	0.771	18.713
	100.000		100.000		100.000

Physical Properties	Total	C10+
Specific Gravity at 60°F	0.7138	0.7714
API Gravity at 60°F	66.738	51.933
Molecular Weight	93.936	124.525
Pounds per Gallon (in Vacuum)	5.951	6.431
Pounds per Gallon (in Air)	5.944	6.424
Cu. Ft. Vapor per Gallon @ 14.73 psia	23.985	19.554

Patti L. Perro

Hydrocarbon Laboratory Manager

Quality Assurance: The above analyses are performed in accordance with ASTM, UOP, GPA guidelines for quality assurance, unless otherwise stated.

Certificate of Analysis

Number: 2030-14080152-001A

Carencro Laboratory
4790 NE Evangeline Thruway
Carencro, LA 70520

Rene Garcia Reyes
Envirotech, Inc
5796 US Highway 64
Farmington, NM 87401

Aug. 26, 2014

Field:	Chaco Plant	Sampled By:	TM-Envirotech
Station Name:	Trunk Rack	Sample Of:	Liquid Spot
Station Number:		Sample Date:	08/08/2014
Sample Point:		Sample Conditions:	
Analyzed:	08/26/2014 13:11:00	Method:	GPA-2186M/GPA-2103

Analytical Data

Components	Mol. %	MW	Wt. %	Sp. Gravity	L.V. %
Nitrogen	NIL	28.013	NIL	0.807	NIL
Carbon Dioxide	NIL	44.010	NIL	0.817	NIL
Methane	0.006	16.043	0.001	0.300	0.002
Ethane	0.081	30.069	0.026	0.356	0.053
Propane	1.474	44.096	0.692	0.507	0.974
Iso-butane	2.077	58.122	1.285	0.563	1.630
n-Butane	6.132	58.122	3.794	0.584	4.636
Iso-pentane	6.097	72.149	4.683	0.625	5.347
n-Pentane	6.464	72.149	4.965	0.631	5.619
Hexanes	14.199	85.248	12.886	0.667	13.789
Heptanes Plus	63.470	106.069	71.668	0.753	67.950
	100.000		100.000		100.000

Physical Properties	Total	C7+
Specific Gravity at 60°F	0.7138	0.7527
API Gravity at 60°F	66.738	56.480
Molecular Weight	93.936	106.069
Pounds per Gallon (in Vacuum)	5.951	6.276
Pounds per Gallon (in Air)	5.944	6.269
Cu. Ft. Vapor per Gallon @ 14.73 psia	23.985	22.401

Patti L. Petro

Hydrocarbon Laboratory Manager

Quality Assurance: The above analyses are performed in accordance with ASTM, UOP, GPA guidelines for quality assurance, unless otherwise stated.

Chain of Custody Record

4790 NE Evangeline Thruway
Carencro, LA 70520
337-896-3055

Work Order No.: 1408152 Page 1 of 1

Report To:

Company: Envirotech, Inc.
Client Contact: Rene Garcia-Reyes
Phone: 505-947-5660 / 505-632-1865
Email: rgarcia@envirotech-inc.com
Address: 5796 U.S. Highway 64
Address:
City/State/Zip: Farmington, NM 87401

Invoice To:

Company: Envirotech, Inc.
Contact: Greg Crabtree
Address: 5796 U.S. Highway 64
City/State/Zip: Farmington, NM 87401

Requested Analysis (List each test here): GPA 2186-02 → Extended Analysis of NGL

Requested TAT: ☐ 24hr* ☐ 48hr* ☐ 72hr* ☒ Standard ☐ Other

Field/Location:

Sample ID	Sample Date	Sample Time	Sample Type (Gas/Liq./Solid)	Duplicate	Composite	Spot	Cylinder #	GPA 2186-02	Extended Analysis of NGL	Comments
Truck Rack	8/8/14	12:30	Liq	X		X		X		97057-0631

Special Instructions:

Cylinders not returned after 30 days will be considered lost and will be billed at current replacement cost.

Sampled By-Print Name: Tiffany McIntosh
Signature: Tiffany McIntosh

Company Name: Envirotech, Inc.

Relinquished By-Print Name: Tiffany McIntosh Date: 8/12/14 Time: AM 8:10
Signature: Tiffany McIntosh

Received By-Print Name: Date: Time:
Signature:

Relinquished By-Print Name: Date: Time:
Signature:

Received By-Print Name: Date: 8/15/14 Time:
Signature:

☐ 8820 Interchange Dr., Houston, TX 77054 (713) 660-0901
☐ 9221 Hwy 23, Belle Chasse, LA 70037 (504) 391-1337
☐ 231 Mt. Zion Rd., Shreveport, LA 71106 (318) 686-1811
☐ 2440 Chambers St, Suite A, Venus, TX 76084 (817) 539-2168
☒ 4790 NE Evangeline Thrwy, Carencro, LA 70520 (337) 237-4775
☐ 1595 US 79 South, Carthage, TX 75633 (903) 693-6242
☐ 627 2nd St, Pleasanton, TX 78064 (830) 224-7920
☐ 781 Industrial Circle, Suite 6, Traverse City, MI 49686 (231) 421-8202

Supporting Information: Unit TRUCK

5.2 Transportation And Marketing Of Petroleum Liquids[1-3]

5.2.1 General

The transportation and marketing of petroleum liquids involve many distinct operations, each of which represents a potential source of evaporation loss. Crude oil is transported from production operations to a refinery by tankers, barges, rail tank cars, tank trucks, and pipelines. Refined petroleum products are conveyed to fuel marketing terminals and petrochemical industries by these same modes. From the fuel marketing terminals, the fuels are delivered by tank trucks to service stations, commercial accounts, and local bulk storage plants. The final destination for gasoline is usually a motor vehicle gasoline tank. Similar distribution paths exist for fuel oils and other petroleum products. A general depiction of these activities is shown in Figure 5.2-1.

5.2.2 Emissions And Controls

Evaporative emissions from the transportation and marketing of petroleum liquids may be considered, by storage equipment and mode of transportation used, in four categories:

1. Rail tank cars, tank trucks, and marine vessels: loading, transit, and ballasting losses.
2. Service stations: bulk fuel drop losses and underground tank breathing losses.
3. Motor vehicle tanks: refueling losses.
4. Large storage tanks: breathing, working, and standing storage losses. (See Chapter 7, "Liquid Storage Tanks".)

Evaporative and exhaust emissions are also associated with motor vehicle operation, and these topics are discussed in AP-42 *Volume II: Mobile Sources*.

5.2.2.1 Rail Tank Cars, Tank Trucks, And Marine Vessels -

Emissions from these sources are from loading losses, ballasting losses, and transit losses.

5.2.2.1.1 Loading Losses -

Loading losses are the primary source of evaporative emissions from rail tank car, tank truck, and marine vessel operations. Loading losses occur as organic vapors in "empty" cargo tanks are displaced to the atmosphere by the liquid being loaded into the tanks. These vapors are a composite of (1) vapors formed in the empty tank by evaporation of residual product from previous loads, (2) vapors transferred to the tank in vapor balance systems as product is being unloaded, and (3) vapors generated in the tank as the new product is being loaded. The quantity of evaporative losses from loading operations is, therefore, a function of the following parameters:

- Physical and chemical characteristics of the previous cargo;
- Method of unloading the previous cargo;
- Operations to transport the empty carrier to a loading terminal;
- Method of loading the new cargo; and
- Physical and chemical characteristics of the new cargo.

The principal methods of cargo carrier loading are illustrated in Figure 5.2-2, Figure 5.2-3, and Figure 5.2-4. In the splash loading method, the fill pipe dispensing the cargo is lowered only part way into the cargo tank. Significant turbulence and vapor/liquid contact occur during the splash

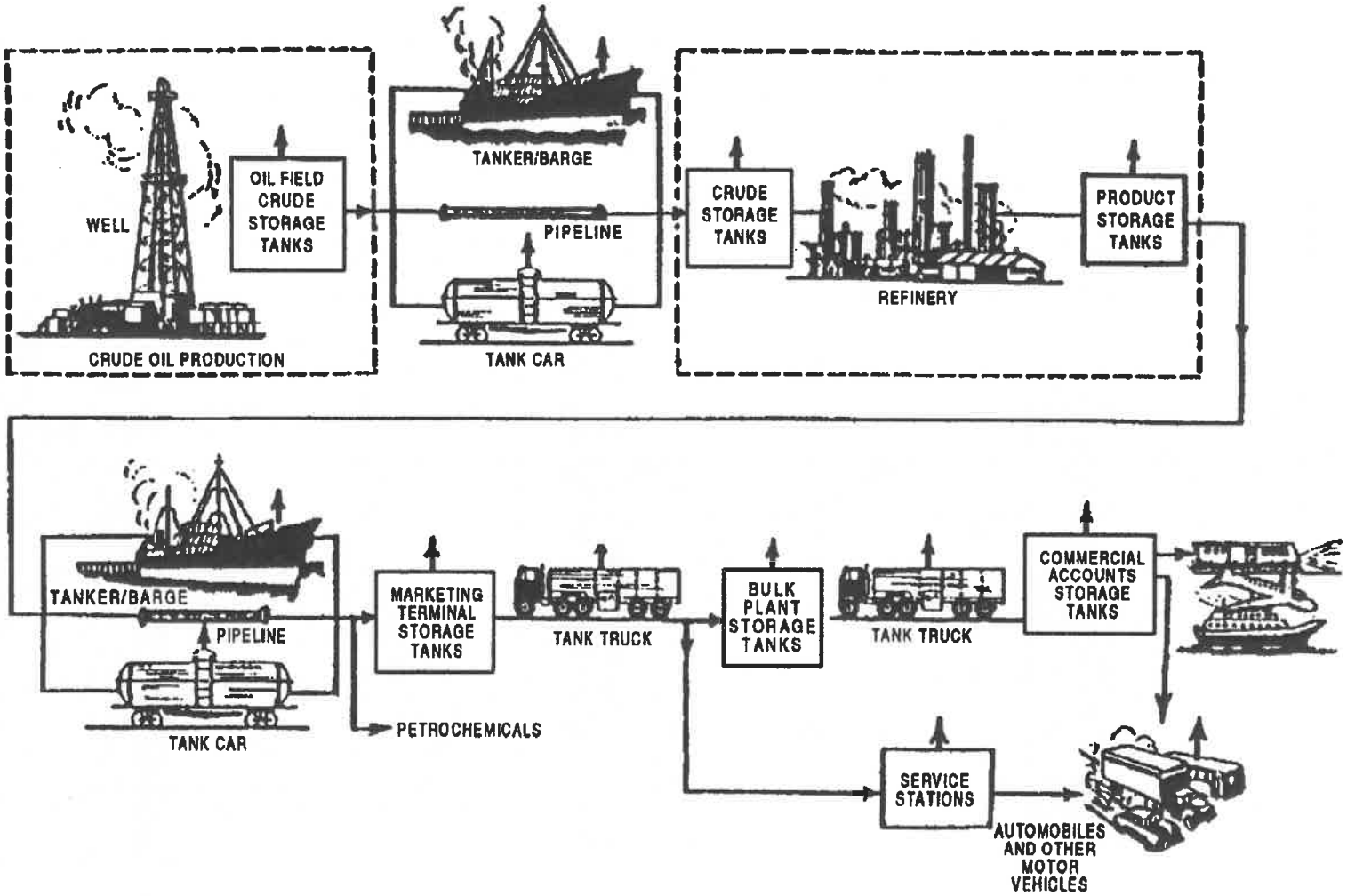

Figure 5.2-1. Flow sheet of petroleum production, refining, and distribution systems. (Points of organic emissions are indicated by vertical arrows.)

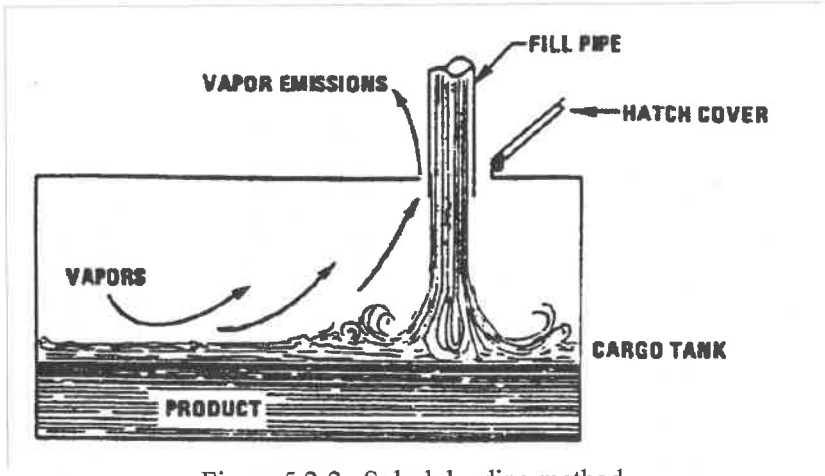

Figure 5.2-2. Splash loading method.

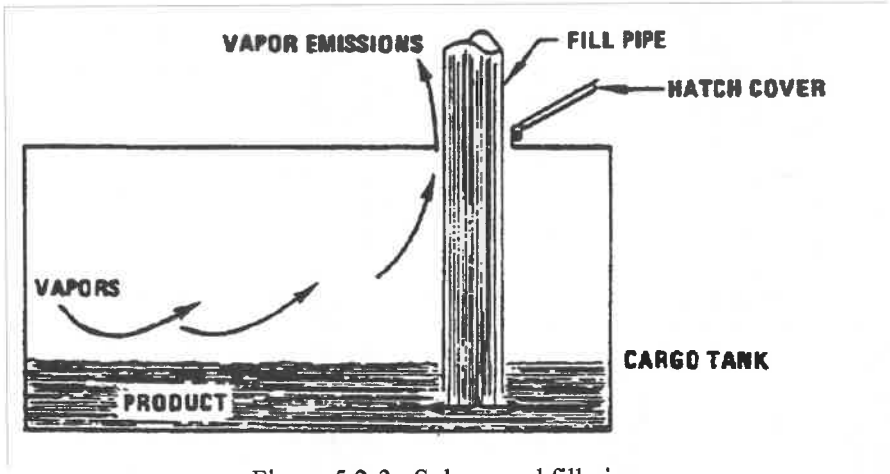

Figure 5.2-3. Submerged fill pipe.

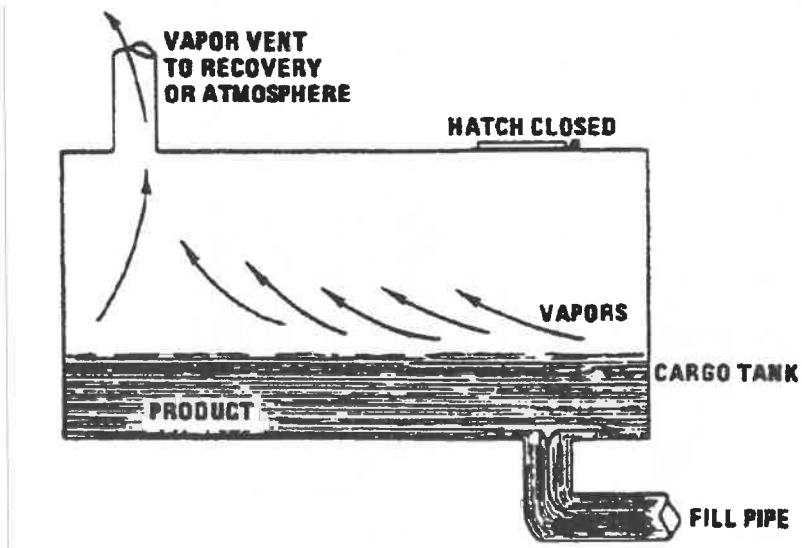

Figure 5.2-4. Bottom loading.

loading operation, resulting in high levels of vapor generation and loss. If the turbulence is great enough, liquid droplets will be entrained in the vented vapors.

A second method of loading is submerged loading. Two types are the submerged fill pipe method and the bottom loading method. In the submerged fill pipe method, the fill pipe extends almost to the bottom of the cargo tank. In the bottom loading method, a permanent fill pipe is attached to the cargo tank bottom. During most of submerged loading by both methods, the fill pipe opening is below the liquid surface level. Liquid turbulence is controlled significantly during submerged loading, resulting in much lower vapor generation than encountered during splash loading.

The recent loading history of a cargo carrier is just as important a factor in loading losses as the method of loading. If the carrier has carried a nonvolatile liquid such as fuel oil, or has just been cleaned, it will contain vapor-free air. If it has just carried gasoline and has not been vented, the air in the carrier tank will contain volatile organic vapors, which will be expelled during the loading operation along with newly generated vapors.

Cargo carriers are sometimes designated to transport only one product, and in such cases are practicing "dedicated service". Dedicated gasoline cargo tanks return to a loading terminal containing air fully or partially saturated with vapor from the previous load. Cargo tanks may also be "switch loaded" with various products, so that a nonvolatile product being loaded may expel the vapors remaining from a previous load of a volatile product such as gasoline. These circumstances vary with the type of cargo tank and with the ownership of the carrier, the petroleum liquids being transported, geographic location, and season of the year.

One control measure for vapors displaced during liquid loading is called "vapor balance service", in which the cargo tank retrieves the vapors displaced during product unloading at bulk plants or service stations and transports the vapors back to the loading terminal. Figure 5.2-5 shows a tank truck in vapor balance service filling a service station underground tank and taking on displaced gasoline vapors for return to the terminal. A cargo tank returning to a bulk terminal in vapor balance service normally is saturated with organic vapors, and the presence of these vapors at the start of submerged loading of the tanker truck results in greater loading losses than encountered during nonvapor balance, or "normal", service. Vapor balance service is usually not practiced with marine vessels, although some vessels practice emission control by means of vapor transfer within their own cargo tanks during ballasting operations, discussed below.

Emissions from loading petroleum liquid can be estimated (with a probable error of ±30 percent)[4] using the following expression:

$$L_L = 12.46 \frac{SPM}{T} \qquad (1)$$

where:

L_L = loading loss, pounds per 1000 gallons (lb/10^3 gal) of liquid loaded

S = a saturation factor (see Table 5.2-1)
P = true vapor pressure of liquid loaded, pounds per square inch absolute (psia) (see Section 7.1, "Organic Liquid Storage Tanks")
M = molecular weight of vapors, pounds per pound-mole (lb/lb-mole) (see Section 7.1, "Organic Liquid Storage Tanks")
T = temperature of bulk liquid loaded, °R (°F + 460)

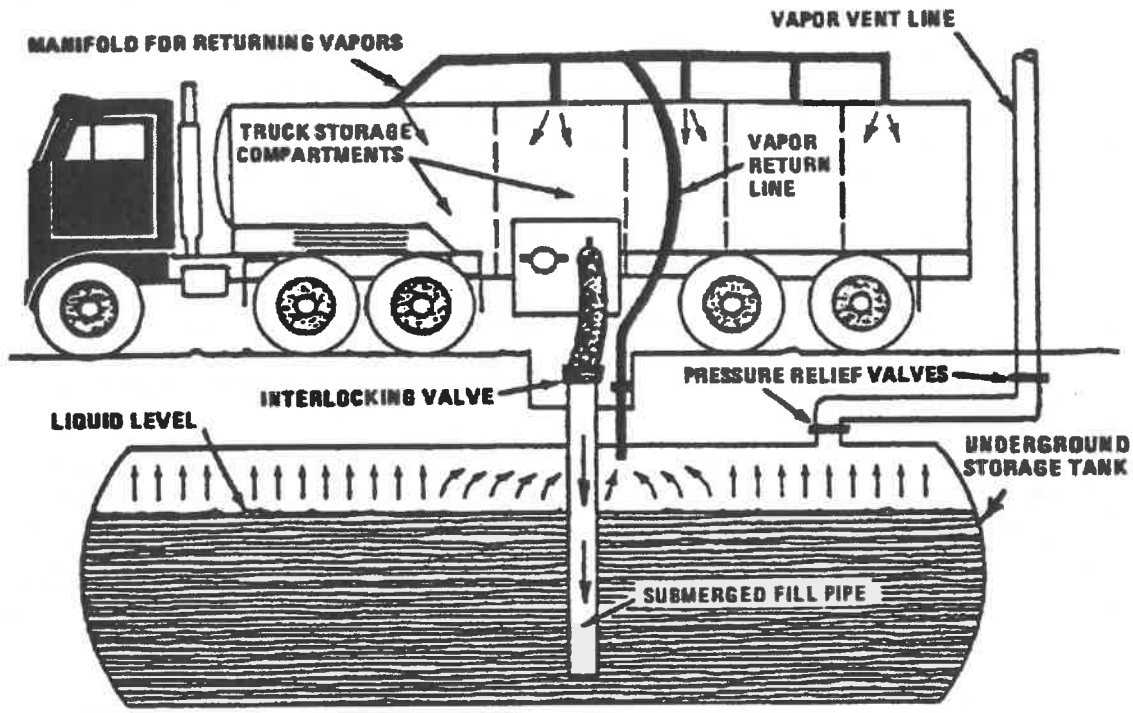

Figure 5.2-5. Tank truck unloading into a service station underground storage tank and practicing "vapor balance" form of emission control.

Table 5.2-1. SATURATION (S) FACTORS FOR CALCULATING PETROLEUM LIQUID LOADING LOSSES

Cargo Carrier	Mode Of Operation	S Factor
Tank trucks and rail tank cars	Submerged loading of a clean cargo tank	0.50
	Submerged loading: dedicated normal service	0.60
	Submerged loading: dedicated vapor balance service	1.00
	Splash loading of a clean cargo tank	1.45
	Splash loading: dedicated normal service	1.45
	Splash loading: dedicated vapor balance service	1.00
Marine vessels[a]	Submerged loading: ships	0.2
	Submerged loading: barges	0.5

[a] For products other than gasoline and crude oil. For marine loading of gasoline, use factors from Table 5.2-2. For marine loading of crude oil, use Equations 2 and 3 and Table 5.2-3.

The saturation factor, S, represents the expelled vapor's fractional approach to saturation, and it accounts for the variations observed in emission rates from the different unloading and loading methods. Table 5.2-1 lists suggested saturation factors.

Emissions from controlled loading operations can be calculated by multiplying the uncontrolled emission rate calculated in Equation 1 by an overall reduction efficiency term:

$$\left(1 - \frac{\text{eff}}{100}\right)$$

The overall reduction efficiency should account for the capture efficiency of the collection system as well as both the control efficiency and any downtime of the control device. Measures to reduce loading emissions include selection of alternate loading methods and application of vapor recovery equipment. The latter captures organic vapors displaced during loading operations and recovers the vapors by the use of refrigeration, absorption, adsorption, and/or compression. The recovered product is piped back to storage. Vapors can also be controlled through combustion in a thermal oxidation unit, with no product recovery. Figure 5.2-6 demonstrates the recovery of gasoline vapors from tank trucks during loading operations at bulk terminals. Control efficiencies for the recovery units range from 90 to over 99 percent, depending on both the nature of the vapors and the type of control equipment used.[5-6] However, not all of the displaced vapors reach the control device, because of leakage from both the tank truck and collection system. The collection efficiency should be assumed to be 99.2 percent for tanker trucks passing the MACT-level annual leak test (not more than 1 inch water column pressure change in 5 minutes after pressurizing to 18 inches water followed by pulling a vacuum of 6 inches water).[7] A collection efficiency of 98.7 percent (a 1.3 percent leakage rate) should be assumed for trucks passing the NSPS-level annual test (3 inches pressure change) A collection efficiency of 70 percent should be assumed for trucks not passing one of these annual leak tests[6].

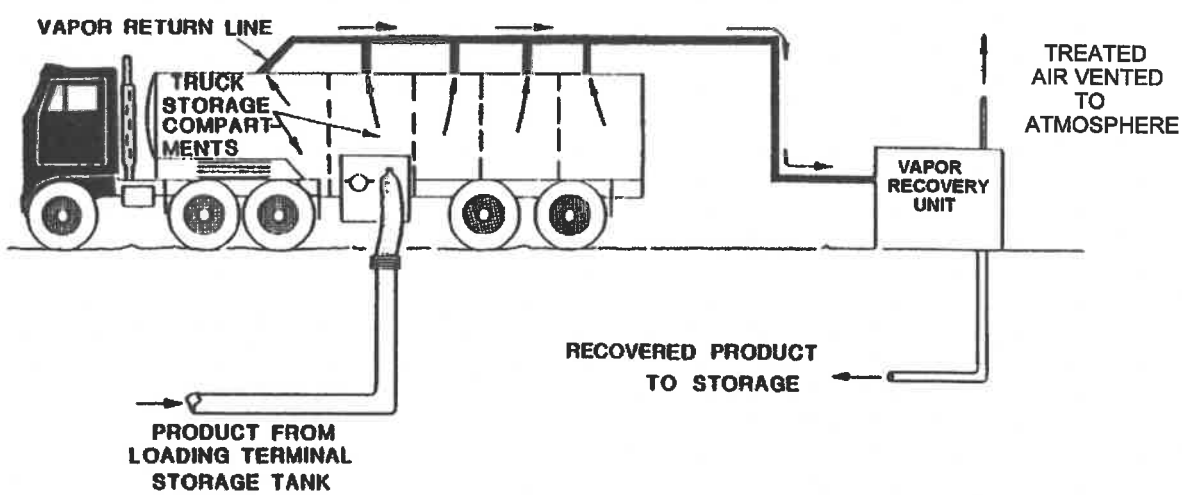

Figure 5.2-6. Tank truck loading with vapor recovery.

Sample Calculation -

Loading losses (L_L) from a gasoline tank truck in dedicated vapor balance service and practicing vapor recovery would be calculated as follows, using Equation 1:

Design basis -

Cargo tank volume is 8000 gal
Gasoline Reid vapor pressure (RVP) is 9 psia
Product temperature is 80°F
Vapor recovery efficiency is 95 percent
Vapor collection efficiency is 98.7 percent (NSPS-level annual leak test)

Loading loss equation -

$$L_L = 12.46 \frac{SPM}{T} \left(1 - \frac{eff}{100}\right)$$

where:

S = saturation factor (see Table 5.2-1) - 1.00
P = true vapor pressure of gasoline = 6.6 psia
M = molecular weight of gasoline vapors = 66
T = temperature of gasoline = 540°R
eff = overall reduction efficiency (95 percent control x 98.7 percent collection) = 94 percent

$$L_L = 12.46 \frac{(1.00)(6.6)(66)}{540} \left(1 - \frac{94}{100}\right)$$

$$= 0.60 \text{ lb}/10^3 \text{ gal}$$

Total loading losses are:

$$(0.60 \text{ lb}/10^3 \text{ gal})(8.0 \times 10^3 \text{ gal}) = 4.8 \text{ pounds (lb)}$$

Measurements of gasoline loading losses from ships and barges have led to the development of emission factors for these specific loading operations.[8] These factors are presented in Table 5.2-2 and should be used instead of Equation 1 for gasoline loading operations at marine terminals. Factors are expressed in units of milligrams per liter (mg/L) and pounds per 1000 gallons (lb/10^3 gal).

Table 5.2-2 (Metric And English Units). VOLATILE ORGANIC COMPOUND (VOC) EMISSION FACTORS FOR GASOLINE LOADING OPERATIONS AT MARINE TERMINALS[a]

Vessel Tank Condition	Previous Cargo	Ships/Ocean Barges[b]		Barges[b]	
		mg/L Transferred	lb/10^3 gal Transferred	mg/L Transferred	lb/10^3 gal Transferred
Uncleaned	Volatile[c]	315	2.6	465	3.9
Ballasted	Volatile	205	1.7	—[d]	—[d]
Cleaned	Volatile	180	1.5	ND	ND
Gas-freed	Volatile	85	0.7	ND	ND
Any condition	Nonvolatile	85	0.7	ND	ND
Gas-freed	Any cargo	ND	ND	245	2.0
Typical overall situation[e]	Any cargo	215	1.8	410	3.4

[a] References 2,9. Factors are for both VOC emissions (which excludes methane and ethane) and total organic emissions, because methane and ethane have been found to constitute a negligible weight fraction of the evaporative emissions from gasoline. ND = no data.
[b] Ocean barges (tank compartment depth about 12.2 m [40 ft]) exhibit emission levels similar to tank ships. Shallow draft barges (compartment depth 3.0 to 3.7 m [10 to 12 ft]) exhibit higher emission levels.
[c] Volatile cargoes are those with a true vapor pressure greater than 10 kilopascals (kPa) (1.5 psia).
[d] Barges are usually not ballasted.
[e] Based on observation that 41% of tested ship compartments were uncleaned, 11% ballasted, 24% cleaned, and 24% gas-freed. For barges, 76% were uncleaned.

In addition to Equation 1, which estimates emissions from the loading of petroleum liquids, Equation 2 has been developed specifically for estimating emissions from the loading of crude oil into ships and ocean barges:

$$C_L = C_A + C_G \tag{2}$$

where:

C_L = total loading loss, lb/10^3 gal of crude oil loaded
C_A = arrival emission factor, contributed by vapors in the empty tank compartment before loading, lb/10^3 gal loaded (see Note below)
C_G = generated emission factor, contributed by evaporation during loading, lb/10^3 gal loaded

Note: Values of C_A for various cargo tank conditions are listed in Table 5.2-3.

5.2-3 (English Units). AVERAGE ARRIVAL EMISSION FACTORS, C_A, FOR CRUDE OIL LOADING EMISSION EQUATION[a]

Ship/Ocean Barge Tank Condition	Previous Cargo	Arrival Emission Factor, lb/10^3 gal
Uncleaned	Volatile[b]	0.86
Ballasted	Volatile	0.46
Cleaned or gas-freed	Volatile	0.33
Any condition	Nonvolatile	0.33

[a] Arrival emission factors (C_A) to be added to generated emission factors (C_G) calculated in Equation 3 to produce total crude oil loading loss (C_L). Factors are for total organic compounds; VOC emission factors average about 15% lower, because VOC does not include methane or ethane.
[b] Volatile cargoes are those with a true vapor pressure greater than 10 kPa (1.5 psia).

This equation was developed empirically from test measurements of several vessel compartments.[8] The quantity C_G can be calculated using Equation 3:

$$C_G = 1.84\ (0.44\ P - 0.42)\ \frac{M\,G}{T} \qquad (3)$$

where:

P = true vapor pressure of loaded crude oil, psia
M = molecular weight of vapors, lb/lb-mole
G = vapor growth factor = 1.02 (dimensionless)
T = temperature of vapors, °R (°F + 460)

Emission factors derived from Equation 3 and Table 5.2-3 represent total organic compounds. Volatile organic compound (VOC) emission factors (which exclude methane and ethane because they are exempted from the regulatory definition of "VOC") for crude oil vapors have been found to range from approximately 55 to 100 weight percent of these total organic factors. When specific vapor composition information is not available, the VOC emission factor can be estimated by taking 85 percent of the total organic factor.[3]

5.2.2.1.2 Ballasting Losses -

Ballasting operations are a major source of evaporative emissions associated with the unloading of petroleum liquids at marine terminals. It is common practice to load several cargo tank compartments with sea water after the cargo has been unloaded. This water, termed "ballast", improves the stability of the empty tanker during the subsequent voyage. Although ballasting practices vary, individual cargo tanks are ballasted typically about 80 percent, and the total vessel 15 to 40 percent, of capacity. Ballasting emissions occur as vapor-laden air in the "empty" cargo tank is displaced to the atmosphere by ballast water being pumped into the tank. Upon arrival at a loading port, the ballast water is pumped from the cargo tanks before the new cargo is loaded. The ballasting of cargo tanks reduces the quantity of vapors returning in the empty tank, thereby reducing the quantity of vapors emitted during subsequent tanker loading. Regulations administered by the U. S. Coast Guard require that, at marine terminals located in ozone nonattainment areas, large tankers with crude oil washing systems contain the organic vapors from ballasting.[10] This is accomplished principally by displacing the vapors during ballasting into a cargo tank being simultaneously unloaded. In other areas, marine vessels emit organic vapors directly to the atmosphere.

Equation 4 has been developed from test data to calculate the ballasting emissions from crude oil ships and ocean barges[8]:

$$L_B = 0.31 + 0.20\ P + 0.01\ PU_A \qquad (4)$$

where:

L_B = ballasting emission factor, lb/10^3 gal of ballast water
P = true vapor pressure of discharged crude oil, psia
U_A = arrival cargo true ullage, before dockside discharge, measured from the deck, feet; (the term "ullage" here refers to the distance between the cargo surface level and the deck level)

Table 5.2-4 lists average total organic emission factors for ballasting into uncleaned crude oil cargo compartments. The first category applies to "full" compartments wherein the crude oil true ullage just before cargo discharge is less than 1.5 meters (m) (5 ft). The second category applies to lightered, or short-loaded, compartments (part of cargo previously discharged, or original load a partial fill), with an arrival true ullage greater than 1.5 m (5 ft). It should be remembered that these tabulated emission factors are examples only, based on average conditions, to be used when crude oil vapor pressure is unknown. Equation 4 should be used when information about crude oil vapor pressure and cargo compartment condition is available. The following sample calculation illustrates the use of Equation 4.

5.2-4 (Metric And English Units). TOTAL ORGANIC EMISSION FACTORS FOR CRUDE OIL BALLASTING[a]

Compartment Condition Before Cargo Discharge	Average Emission Factors			
	By Category		Typical Overall[b]	
	mg/L Ballast Water	lb/10^3 gal Ballast Water	mg/L Ballast Water	lb/10^3 gal Ballast Water
Fully loaded[c]	111	0.9	129	1.1
Lightered or previously short loaded[d]	171	1.4		

[a] Assumes crude oil temperature of 16°C (60°F) and RVP of 34 kPa (5 psia). VOC emission factors average about 85% of these total organic factors, because VOCs do not include methane or ethane.
[b] Based on observation that 70% of tested compartments had been fully loaded before ballasting. May not represent average vessel practices.
[c] Assumed typical arrival ullage of 0.6 m (2 ft).
[d] Assumed typical arrival ullage of 6.1 m (20 ft).

Sample Calculation -

Ballasting emissions from a crude oil cargo ship would be calculated as follows, using Equation 4:

Design basis -

Vessel and cargo description: 80,000 dead-weight-ton tanker, crude oil capacity 500,000 barrels (bbl); 20 percent of the cargo capacity is filled with ballast water after cargo discharge. The crude oil has an RVP of 6 psia and is discharged at 75°F.

Compartment conditions: 70 percent of the ballast water is loaded into compartments that had been fully loaded to 2 ft ullage, and 30 percent is loaded into compartments that had been lightered to 15 ft ullage before arrival at dockside.

Ballasting emission equation -

$$L_B = 0.31 + 0.20\ P + 0.01\ PU_A$$

where:

P = true vapor pressure of crude oil
= 4.6 psia
U_A = true cargo ullage for the full compartments = 2 ft, and true cargo ullage for the lightered compartments = 15 ft

$$L_B = 0.70\ [0.31 + (0.20)\ (4.6) + (0.01)\ (4.6)\ (2)] + 0.30\ [0.31 + (0.20)\ (4.6) + (0.01)\ (4.6)\ (15)]$$

$$= 1.5\ \text{lb}/10^3\ \text{gal}$$

Total ballasting emissions are:

$$(1.5\ \text{lb}/10^3\ \text{gal})\ (0.20)\ (500{,}000\ \text{bbl})\ (42\ \text{gal/bbl}) = 6{,}300\ \text{lb}$$

Since VOC emissions average about 85 percent of these total organic emissions, emissions of VOCs are about: (0.85)(6,300 lb) = 5,360 lb

5.2.2.1.3 Transit Losses -

In addition to loading and ballasting losses, losses occur while the cargo is in transit. Transit losses are similar in many ways to breathing losses associated with petroleum storage (see Section 7.1, "Organic Liquid Storage Tanks"). Experimental tests on ships and barges[4] have indicated that transit losses can be calculated using Equation 5:

$$L_T = 0.1\ PW \qquad (5)$$

where:

L_T = transit loss from ships and barges, lb/week-10^3 gal transported
P = true vapor pressure of the transported liquid, psia
W = density of the condensed vapors, lb/gal

Emissions from gasoline truck cargo tanks during transit have been studied by a combination of theoretical and experimental techniques, and typical emission values are presented in Table 5.2-5.[11-12] Emissions depend on the extent of venting from the cargo tank during transit, which in turn depends on the vapor tightness of the tank, the pressure relief valve settings, the pressure in the tank at the start of the trip, the vapor pressure of the fuel being transported, and the degree of fuel vapor saturation of the space in the tank. The emissions are not directly proportional to the time spent in transit. If the vapor leakage rate of the tank increases, emissions increase up to a point, and then the rate changes as other determining factors take over. Truck tanks in dedicated vapor balance service usually contain saturated vapors, and this leads to lower emissions during transit because no additional fuel evaporates to raise the pressure in the tank to cause venting. Table 5.2-5 lists "typical" values for transit emissions and "extreme" values that could occur in the unlikely event that all determining factors combined to cause maximum emissions.

Table 5.2-5 (Metric And English Units). TOTAL UNCONTROLLED ORGANIC EMISSION FACTORS FOR PETROLEUM LIQUID RAIL TANK CARS AND TANK TRUCKS

Emission Source	Gasoline[a]	Crude Oil[b]	Jet Naphtha (JP-4)	Jet Kerosene	Distillate Oil No. 2	Residual Oil No. 6
Loading operations[c]						
Submerged loading - Dedicated normal service[d]						
mg/L transferred	590	240	180	1.9	1.7	0.01
lb/10^3 gal transferred	5	2	1.5	0.016	0.014	0.0001
Submerged loading - Vapor balance service[d]						
mg/L transferred	980	400	300	—[e]	—[e]	—[e]
lb/10^3 gal transferred	8	3	2.5	—[e]	—[e]	—[e]
Splash loading - Dedicated normal service						
mg/L transferred	1,430	580	430	5	4	0.03
lb/10^3 gal transferred	12	5	4	0.04	0.03	0.0003
Splash loading - Vapor balance service						
mg/L transferred	980	400	300	—[e]	—[e]	—[e]
lb/10^3 gal transferred	8	3	2.5	—[e]	—[e]	—[e]

Table 5.2-5 (cont.).

Emission Source	Gasoline[a]	Crude Oil[b]	Jet Naphtha (JP-4)	Jet Kerosene	Distillate Oil No. 2	Residual Oil No. 6
Transit losses						
Loaded with product						
mg/L transported						
Typical	0 - 1.0	ND	ND	ND	ND	ND
Extreme	0 - 9.0	ND	ND	ND	ND	ND
lb/10^3 gal transported						
Typical	0 - 0.01	ND	ND	ND	ND	ND
Extreme	0 - 0.08	ND	ND	ND	ND	ND
Return with vapor						
mg/L transported						
Typical	0 - 13.0	ND	ND	ND	ND	ND
Extreme	0 - 44.0	ND	ND	ND	ND	ND
lb/10^3 gal transported						
Typical	0 - 0.11	ND	ND	ND	ND	ND
Extreme	0 - 0.37	ND	ND	ND	ND	ND

[a] Reference 2. Gasoline factors represent emissions of VOC as well as total organics, because methane and ethane constitute a negligible weight fraction of the evaporative emissions from gasoline. VOC factors for crude oil can be assumed to be 15% lower than the total organic factors, to account for the methane and ethane content of crude oil evaporative emissions. All other products should be assumed to have VOC factors equal to total organics. The example gasoline has an RVP of 69 kPa (10 psia). ND = no data.
[b] The example crude oil has an RVP of 34 kPa (5 psia).
[c] Loading emission factors are calculated using Equation 1 for a dispensed product temperature of 16°C (60°F).
[d] Reference 2.
[e] Not normally used.

In the absence of specific inputs for Equations 1 through 5, the typical evaporative emission factors presented in Tables 5.2-5 and 5.2-6 should be used. It should be noted that, although the crude oil used to calculate the emission values presented in these tables has an RVP of 5, the RVP of crude oils can range from less than 1 up to 10. Similarly, the RVP of gasolines ranges from 7 to 13. In areas where loading and transportation sources are major factors affecting air quality, it is advisable to obtain the necessary parameters and to calculate emission estimates using Equations 1 through 5.

5.2.2.2 Service Stations -

Another major source of evaporative emissions is the filling of underground gasoline storage tanks at service stations. Gasoline is usually delivered to service stations in 30,000-liter (8,000-gal) tank trucks or smaller account trucks. Emissions are generated when gasoline vapors in the underground storage tank are displaced to the atmosphere by the gasoline being loaded into the tank. As with other loading losses, the quantity of loss in service station tank filling depends on several variables, including the method and rate of filling, the tank configuration, and the gasoline temperature, vapor pressure and composition. An average emission rate for submerged filling is 880 mg/L (7.3 lb/1000 gal) of transferred gasoline, and the rate for splash filling is 1380 mg/L (11.5 lb/1000 gal) transferred gasoline (see Table 5.2-7).[5]

Table 5.2-6 (Metric And English Units). TOTAL ORGANIC EMISSION FACTORS FOR PETROLEUM MARINE VESSEL SOURCES[a]

Emission Source	Gasoline[b]	Crude Oil[c]	Jet Naphtha (JP-4)	Jet Kerosene	Distillate Oil No. 2	Residual Oil No. 6
Loading operations						
Ships/ocean barges						
mg/L transferred	—[d]	73	60	0.63	0.55	0.004
lb/10^3 gal transferred	—[d]	0.61	0.50	0.005	0.005	0.00004
Barges						
mg/L transferred	—[d]	120	150	1.60	1.40	0.011
lb/10^3 gal transferred	—[d]	1.0	1.2	0.013	0.012	0.00009
Tanker ballasting						
mg/L ballast water	100	—[e]	ND	ND	ND	ND
lb/10^3 gal ballast water	0.8	—[e]	ND	ND	ND	ND
Transit						
mg/week-L transported	320	150	84	0.60	0.54	0.003
lb/week-10^3 gal transported	2.7	1.3	0.7	0.005	0.005	0.00003

[a] Factors are for a dispensed product of 16°C (60°F). ND = no data.
[b] Factors represent VOC as well as total organic emissions, because methane and ethane constitute a negligible fraction of gasoline evaporative emissions. All products other than crude oil can be assumed to have VOC factors equal to total organic factors. The example gasoline has an RVP of 69 kPa (10 psia).
[c] VOC emission factors for a typical crude oil are 15% lower than the total organic factors shown, in order to account for methane and ethane. The example crude oil has an RVP of 34 kPa (5 psia).
[d] See Table 5.2-2 for these factors.
[e] See Table 5.2-4 for these factors.

Emissions from underground tank filling operations at service stations can be reduced by the use of a vapor balance system such as in Figure 5.2-5 (termed Stage I vapor control). The vapor balance system employs a hose that returns gasoline vapors displaced from the underground tank to the tank truck cargo compartments being emptied. The control efficiency of the balance system ranges from 93 to 100 percent. Organic emissions from underground tank filling operations at a service station employing a vapor balance system and submerged filling are not expected to exceed 40 mg/L (0.3 lb/1000 gal) of transferred gasoline.

Table 5.2-7 (Metric And English Units). EVAPORATIVE EMISSIONS FROM GASOLINE SERVICE STATION OPERATIONS[a]

Emission Source	Emission Rate	
	mg/L Throughput	lb/10^3 gal Throughput
Filling underground tank (Stage I)		
Submerged filling	880	7.3
Splash filling	1,380	11.5
Balanced submerged filling	40	0.3
Underground tank breathing and emptying[b]	120	1.0
Vehicle refueling operations (Stage II)		
Displacement losses (uncontrolled)[c]	1,320	11.0
Displacement losses (controlled)	132	1.1
Spillage	80	0.7

[a] Factors are for VOC as well as total organic emissions, because of the methane and ethane content of gasoline evaporative emissions is negligible.
[b] Includes any vapor loss between underground tank and gas pump.
[c] Based on Equation 6, using average conditions.

A second source of vapor emissions from service stations is underground tank breathing. Breathing losses occur daily and are attributable to gasoline evaporation and barometric pressure changes. The frequency with which gasoline is withdrawn from the tank, allowing fresh air to enter to enhance evaporation, also has a major effect on the quantity of these emissions. An average breathing emission rate is 120 mg/L (1.0 lb/1000 gal) of throughput.

5.2.2.3 Motor Vehicle Refueling -

Service station vehicle refueling activity also produces evaporative emissions. Vehicle refueling emissions come from vapors displaced from the automobile tank by dispensed gasoline and from spillage. The quantity of displaced vapors depends on gasoline temperature, auto tank temperature, gasoline RVP, and dispensing rate. Equation 6 can be used to estimate uncontrolled displacement losses from vehicle refueling for a particular set of conditions.[14]

$$E_R = 264.2\ [(-5.909) - 0.0949\ (\Delta T) + 0.0884\ (T_D) + 0.485\ (RVP)] \qquad (6)$$

where:

E_R = refueling emissions, mg/L
ΔT = difference between temperature of fuel in vehicle tank and temperature of dispensed fuel, °F
T_D = temperature of dispensed fuel, °F
RVP = Reid vapor pressure, psia

Note that this equation and the spillage loss factor are incorporated into the *MOBILE* model. The *MOBILE* model allows for disabling of this calculation if it is desired to include these emissions in the stationary area source portion of an inventory rather than in the mobile source portion. It is estimated that the uncontrolled emissions from vapors displaced during vehicle refueling average 1320 mg/L (11.0 lb/1000 gal) of dispensed gasoline.[5,13]

Spillage loss is made up of contributions from prefill and postfill nozzle drip and from spit-back and

overflow from the vehicles's fuel tank filler pipe during filling. The amount of spillage loss can depend on several variables, including service station business characteristics, tank configuration, and operator techniques. An average spillage loss is 80 mg/L (0.7 lb/1000 gal) of dispensed gasoline.[5,13]

Control methods for vehicle refueling emissions are based on conveying the vapors displaced from the vehicle fuel tank to the underground storage tank vapor space through the use of a special hose and nozzle, as depicted in Figure 5.2-7 (termed Stage II vapor control). In "balance" vapor control systems, the vapors are conveyed by natural pressure differentials established during refueling. In "vacuum assist" systems, the conveyance of vapors from the auto fuel tank to the underground storage tank is assisted by a vacuum pump. Tests on a few systems have indicated overall systems control efficiencies in the range of 88 to 92 percent.[5,13] When inventorying these emissions as an area source, rule penetration and rule effectiveness should also be taken into account. *Procedures For Emission Inventory Preparation, Volume IV: Mobile Sources*, EPA-450/4-81-026d, provides more detail on this.

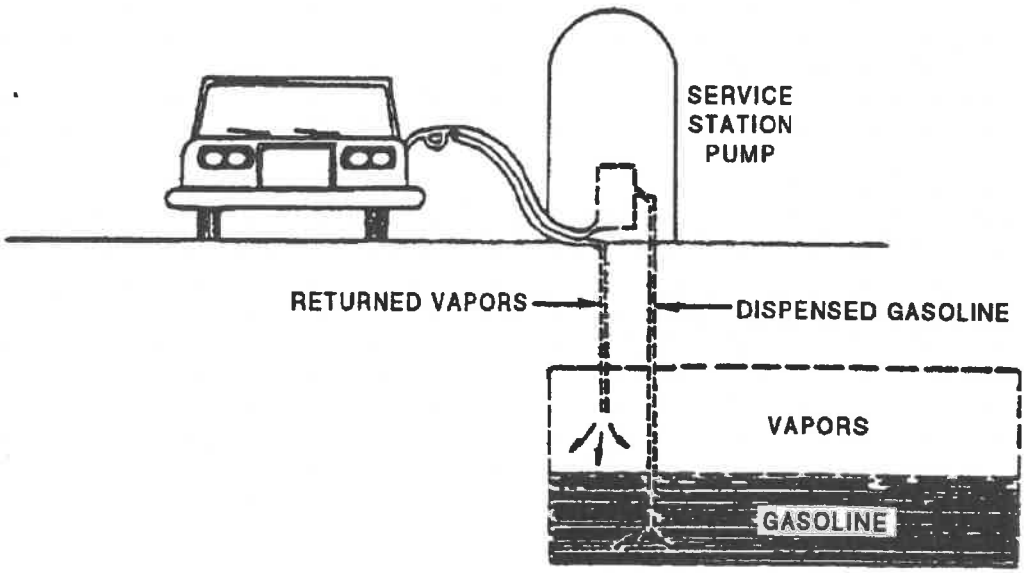

Figure 5.2-7. Automobile refueling vapor recovery system.

References For Section 5.2

1. C. E. Burklin and R. L. Honercamp, *Revision Of Evaporative Hydrocarbon Emission Factors*, EPA-450/3-76-039, U. S. Environmental Protection Agency, Research Triangle Park, NC, August 1976.

2. G. A. LaFlam, *et al.*, *Revision Of Tank Truck Loading Hydrocarbon Emission Factors*, Pacific Environmental Services, Inc., Durham, NC, May 1982.

3. G. A. LaFlam, *Revision Of Marine Vessel Evaporative Emission Factors*, Pacific Environmental Services, Inc., Durham, NC, November 1984.

4. *Evaporation Loss From Tank Cars, Tank Trucks And Marine Vessels*, Bulletin No. 2514, American Petroleum Institute, Washington, DC, 1959.

5. C. E. Burklin, *et al.*, *A Study Of Vapor Control Methods For Gasoline Marketing Operations*, EPA-450/3-75-046A and -046B, U. S. Environmental Protection Agency, Research Triangle Park, NC, May 1975.

6. *Bulk Gasoline Terminals - Background Information For Proposed Standards*, EPA-450/3-80-038a, U. S. Environmental Protection Agency, Research Triangle Park, NC, December 1980.

7. *Gasoline Distribution Industry (Stage I) - Background Information for Promulgated Standards*, EPA-453/R-94-002b, U.S. Environmental Protection Agency, Research Triangle Park, NC, 1995.

8. *Atmospheric Hydrocarbon Emissions From Marine Vessel Transfer Operations*, Publication 2514A, American Petroleum Institute, Washington, DC, 1981.

9. C. E. Burklin, *et al.*, *Background Information On Hydrocarbon Emissions From Marine Terminal Operations*, EPA-450/3-76-038a and -038b, U. S. Environmental Protection Agency, Research Triangle Park, NC, November 1976.

10. *Rules For The Protection Of The Marine Environment Relating To Tank Vessels Carrying Oil In Bulk*, 45 FR 43705, June 30, 1980.

11. R. A. Nichols, *Analytical Calculation Of Fuel Transit Breathing Loss*, Chevron USA, Inc., San Francisco, CA, March 21, 1977.

12. R. A. Nichols, *Tank Truck Leakage Measurements*, Chevron USA, Inc., San Francisco, CA, June 7, 1977.

13. *Investigation Of Passenger Car Refueling Losses: Final Report, 2nd Year Program*, APTD-1453, U. S. Environmental Protection Agency, Research Triangle Park, NC, September 1972.

14. *Refueling Emissions From Uncontrolled Vehicles*, EPA-AA-SDSB-85-6, U. S. Environmental Protection Agency, Ann Arbor, MI, June 1985.

Supporting Information: Units F-001 through F-009

EPNG CHACO PLANT PROCESS STREAM ANALYSIS

based on Cryogenic Plant P&ID stream analyses

FIELD GAS	lb.mole/hr	MOLE %
Methane	37267.62	0.849
Ethane	3376.69	0.077
Propane	1501.73	0.034
Butanes	627.9	0.014
Pentanes	223.94	0.005
Hexanes+	153.74	0.004
Hydrogen Sulfide	0.07	0.000
Other (Non-HC)	768.43	0.017
SUM	43920.12	1

NGL w/ C2	lb.mole/hr	MOLE %
Methane	68.77	0.012
Ethane	3228.19	0.561
Propane	1501.69	0.261
Butanes	250.29	0.043
Pentanes	223.94	0.039
Hexanes+	153.74	0.027
Hydrogen Sulfide		0.000
Other (Non-HC)	330.54	0.057
SUM	5757.16	1

RICH OIL	lb.mole/hr	MOLE %
Methane	68.77	0.012
Ethane	3228.19	0.561
Propane	1501.69	0.261
Butanes	250.29	0.043
Pentanes	223.94	0.039
Hexanes+	153.74	0.027
Hydrogen Sulfide		0.000
Other (Non-HC)	330.54	0.057
SUM	5757.16	1

FUEL GAS	lb.mole/hr	MOLE %
Methane	857.04	0.984
Ethane	3.42	0.004
Propane		
Butanes		
Pentanes		
Hexanes+		
Hydrogen Sulfide		
Other (Non-HC)	10.09	0.012
SUM	870.55	1

NGL w/o C2	lb.mole/hr	MOLE %
Methane	0	0.000
Ethane	15.11	0.009
Propane	755.26	0.454
Butanes	372.57	0.224
Pentanes	192.63	0.116
Hexanes+	139.19	0.084
Hydrogen Sulfide		0.000
Other (Non-HC)	188.7	0.113
SUM	1663.46	1

LEAN OIL	lb.mole/hr	MOLE %
Methane	68.77	0.012
Ethane	3228.19	0.561
Propane	1501.69	0.261
Butanes	250.29	0.043
Pentanes	223.94	0.039
Hexanes+	153.74	0.027
Hydrogen Sulfide		0.000
Other (Non-HC)	330.54	0.057
SUM	5757.16	1

ACID GAS	lb.mole/hr	MOLE %
Methane	0.05	9.4e-5
Ethane	0.97	0.002
Propane	0.09	1.7e-4
Butanes	0.07	1.3e-4
Pentanes		
Hexanes+		
Hydrogen Sulfide	0.1	1.9e-4
Other (Non-HC)	531.72	0.998
SUM	533	1

RICH AMINE (cryo	lb.mole/hr	MOLE %
H2O	12706.51	0.896
MDEA	1280.6	0.090
CO2	197.72	0.014
H2S	0.1	0.000
SUM	14184.93	1

RICH AMINE (LO)	WT %
H2O	*87.1*
MEA	*10.0*
CO2	*2.9*
H2S	*0*
SUM	*100*

amine analyses are from the attached plant product calculation spreadsheet

DeEth Overhead	lb.mole/hr	MOLE %
Methane	63.9	0.015
Ethane	2984.31	0.723
Propane	639.9	0.155
Butanes	110.8	0.027
Pentanes	15.42	0.004
Hexanes+	3.63	0.001
Hydrogen Sulfide	0	
Other (Non-HC)	307.18	0.074
SUM	4125.14	1

LEAN AMINE (cryo	lb.mole/hr	MOLE %
H2O	12706.51	0.908
MDEA	1280.6	0.091
CO2	9.02	0.001
H2S	0	0.000
SUM	13996.13	1

LEAN AMINE (LO)	WT %
H2O	*87.1*
MEA	*12.9*
CO2	*0*
H2S	*0*
SUM	*100*

United States
Environmental Protection
Agency

Office of Air Quality
Planning and Standards
Research Triangle Park NC 27711

EPA-453/R-95-017
November 1995

Air

EPA

Protocol for Equipment Leak Emission Estimates

TABLE 2-4. OIL AND GAS PRODUCTION OPERATIONS AVERAGE EMISSION FACTORS (kg/hr/source)

Equipment Type	Service[a]	Emission Factor (kg/hr/source)[b]
Valves	Gas	4.5E-03
	Heavy Oil	8.4E-06
	Light Oil	2.5E-03
	Water/Oil	9.8E-05
Pump seals	Gas	2.4E-03
	Heavy Oil	NA
	Light Oil	1.3E-02
	Water/Oil	2.4E-05
Others[c]	Gas	8.8E-03
	Heavy Oil	3.2E-05
	Light Oil	7.5E-03
	Water/Oil	1.4E-02
Connectors	Gas	2.0E-04
	Heavy Oil	7.5E-06
	Light Oil	2.1E-04
	Water/Oil	1.1E-04
Flanges	Gas	3.9E-04
	Heavy Oil	3.9E-07
	Light Oil	1.1E-04
	Water/Oil	2.9E-06
Open-ended lines	Gas	2.0E-03
	Heavy Oil	1.4E-04
	Light Oil	1.4E-03
	Water/Oil	2.5E-04

[a]Water/Oil emission factors apply to water streams in oil service with a water content greater than 50%, from the point of origin to the point where the water content reaches 99%. For water streams with a water content greater than 99%, the emission rate is considered negligible.

[b]These factors are for total organic compound emission rates (including non-VOC's such as methane and ethane) and apply to light crude, heavy crude, gas plant, gas production, and off shore facilities. "NA" indicates that not enough data were available to develop the indicated emission factor.

[c]The "other" equipment type was derived from compressors, diaphrams, drains, dump arms, hatches, instruments, meters, pressure relief valves, polished rods, relief valves, and vents. This "other" equipment type should be applied for any equipment type other than connectors, flanges, open-ended lines, pumps, or valves.

No correlation is available for estimating fugitive emissions from compressor stations; therefore, GRI-HAPCalc™ approximates emissions from compressor stations using the equations developed for gas plants.

4.6.4 Speciation of Emissions and Default Component Counts

Emission factors for total hydrocarbons were speciated based on the average composition of bag samples collected as part of the API/GRI study as shown in Table 4-6.[8] Default component counts for gas production facilities and gas plants in GRI-HAPCalc™ are based on the average number of screened components at the gas production facilities and gas plants tested in the API/GRI study. The default component counts for gas compressor stations in GRI-HAPCalc™ were based on site visits to transmission stations performed for the GRI project estimating methane emissions from the natural gas industry and on information from the Canadian Petroleum Association.[9]

Table 4-6

Speciated Fugitive Emission Factors

Weight Fraction of THC Emissions				
Hexane	Benzene	Toluene	Ethylbenzene	Xylenes
0.00300	0.00023	0.00039	0.00002	0.00010

Supporting Information: CT-B & CT-C

13.4 Wet Cooling Towers

13.4.1 General[1]

Cooling towers are heat exchangers that are used to dissipate large heat loads to the atmosphere. They are used as an important component in many industrial and commercial processes needing to dissipate heat. Cooling towers may range in size from less than $5.3(10)^6$ kilojoules (kJ) ($5[10]^6$ British thermal units per hour [Btu/hr]) for small air conditioning cooling towers to over $5275(10)^6$ kJ/hr ($5000[10^6]$ Btu/hr) for large power plant cooling towers.

When water is used as the heat transfer medium, wet, or evaporative, cooling towers may be used. Wet cooling towers rely on the latent heat of water evaporation to exchange heat between the process and the air passing through the cooling tower. The cooling water may be an integral part of the process or may provide cooling via heat exchangers.

Although cooling towers can be classified several ways, the primary classification is into dry towers or wet towers, and some hybrid wet-dry combinations exist. Subclassifications can include the draft type and/or the location of the draft relative to the heat transfer medium, the type of heat transfer medium, the relative direction of air movement, and the type of water distribution system.

In wet cooling towers, heat transfer is measured by the decrease in the process temperature and a corresponding increase in both the moisture content and the wet bulb temperature of the air passing through the cooling tower. (There also may be a change in the sensible, or dry bulb, temperature, but its contribution to the heat transfer process is very small and is typically ignored when designing wet cooling towers.) Wet cooling towers typically contain a wetted medium called "fill" to promote evaporation by providing a large surface area and/or by creating many water drops with a large cumulative surface area.

Cooling towers can be categorized by the type of heat transfer; the type of draft and location of the draft, relative to the heat transfer medium; the type of heat transfer medium; the relative direction of air and water contact; and the type of water distribution system. Since wet, or evaporative, cooling towers are the dominant type, and they also generate air pollutants, this section will address only that type of tower. Diagrams of the various tower configurations are shown in Figure 13.4-1 and Figure 13.4-2.

13.4.2 Emissions And Controls[1]

Because wet cooling towers provide direct contact between the cooling water and the air passing through the tower, some of the liquid water may be entrained in the air stream and be carried out of the tower as "drift" droplets. Therefore, the particulate matter constituent of the drift droplets may be classified as an emission.

The magnitude of drift loss is influenced by the number and size of droplets produced within the cooling tower, which in turn are determined by the fill design, the air and water patterns, and other interrelated factors. Tower maintenance and operation levels also can influence the formation of drift droplets. For example, excessive water flow, excessive airflow, and water bypassing the tower drift eliminators can promote and/or increase drift emissions.

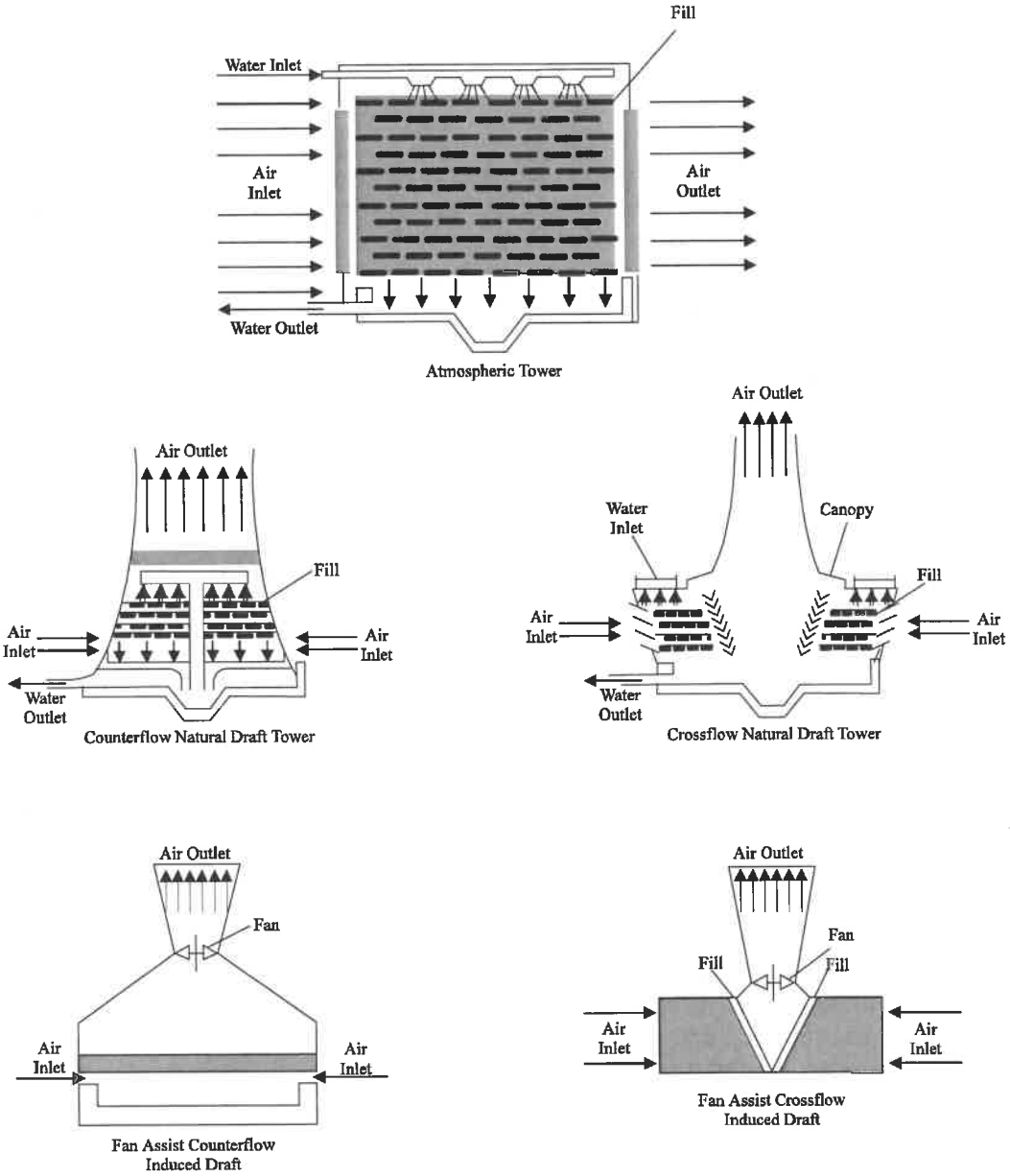

Figure 13.4-1 Atmospheric and natural draft cooling towers.

Because the drift droplets generally contain the same chemical impurities as the water circulating through the tower, these impurities can be converted to airborne emissions. Large drift droplets settle out of the tower exhaust air stream and deposit near the tower. This process can lead to wetting, icing, salt deposition, and related problems such as damage to equipment or to vegetation. Other drift droplets may evaporate before being deposited in the area surrounding the tower, and they also can produce PM-10 emissions. PM-10 is generated when the drift droplets evaporate and leave fine particulate matter formed by crystallization of dissolved solids. Dissolved solids found in cooling tower drift can consist of mineral matter, chemicals for corrosion inhibition, etc.

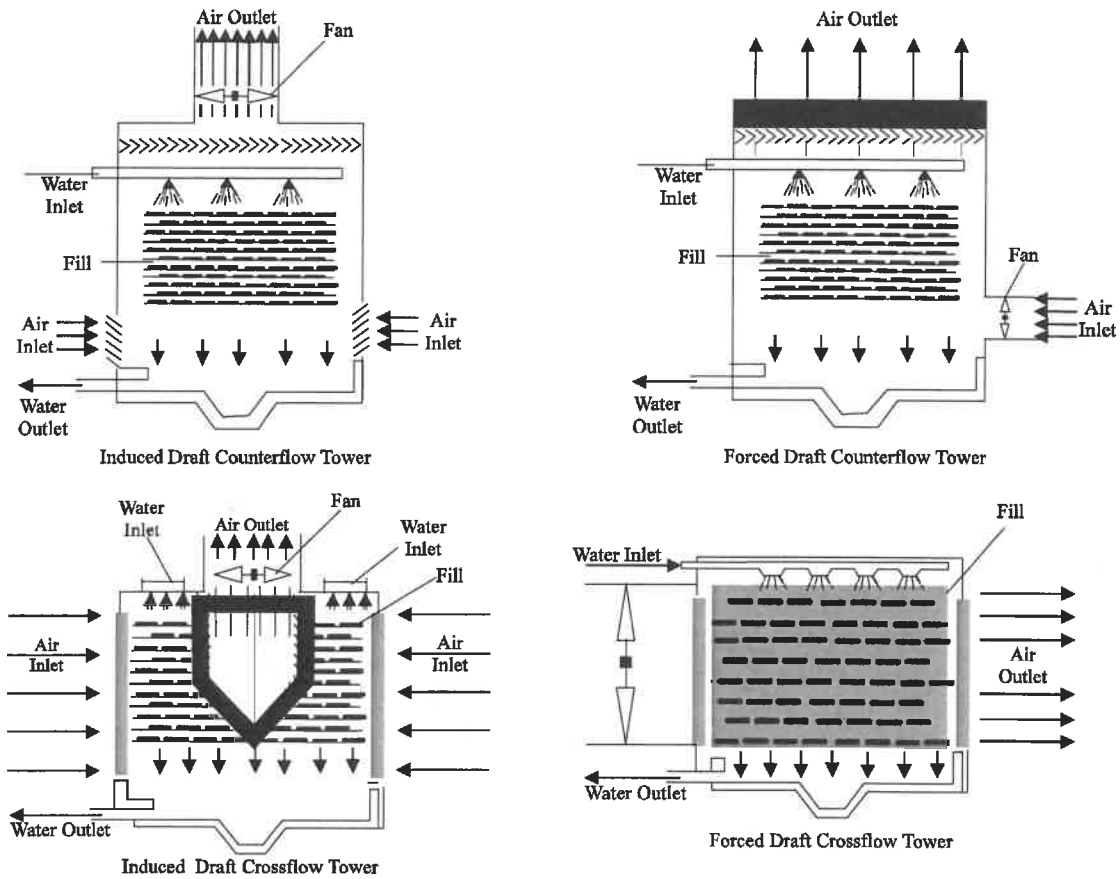

Figure 13.4-2. Mechanical draft cooling towers.

To reduce the drift from cooling towers, drift eliminators are usually incorporated into the tower design to remove as many droplets as practical from the air stream before exiting the tower. The drift eliminators used in cooling towers rely on inertial separation caused by direction changes while passing through the eliminators. Types of drift eliminator configurations include herringbone (blade-type), wave form, and cellular (or honeycomb) designs. The cellular units generally are the most efficient. Drift eliminators may include various materials, such as ceramics, fiber reinforced cement, fiberglass, metal, plastic, and wood installed or formed into closely spaced slats, sheets, honeycomb assemblies, or tiles. The materials may include other features, such as corrugations and water removal channels, to enhance the drift removal further.

Table 13.4-1 provides available particulate emission factors for wet cooling towers. Separate emission factors are given for induced draft and natural draft cooling towers. Several features in Table 13.4-1 should be noted. First, a *conservatively high* PM-10 emission factor can be obtained by (a) multiplying the total liquid drift factor by the total dissolved solids (TDS) fraction in the circulating water and (b) assuming that, once the water evaporates, all remaining solid particles are within the PM-10 size range.

Second, if TDS data for the cooling tower are not available, a source-specific TDS content can be estimated by obtaining the TDS data for the make-up water and multiplying them by the cooling tower cycles of concentration. The cycles of concentration ratio is the ratio of a measured

Table 13.4-1 (Metric And English Units). PARTICULATE EMISSIONS FACTORS FOR WET COOLING TOWERS[a]

Tower Type[d]	Total Liquid Drift[b]				PM-10[c]		
	Circulating Water Flow[b]	g/daL	lb/10^3 gal	EMISSION FACTOR RATING	g/daL[e]	lb/10^3 gal	EMISSION FACTOR RATING
Induced Draft (SCC 3-85-001-01, 3-85-001-20, 3-85-002-01)	0.020	2.0	1.7	D	0.023	0.019	E
Natural Draft (SCC 3-85-001-02, 3-85-002-02)	0.00088	0.088	0.073	E	ND	ND	—

[a] References 1-17. Numbers are given to 2 significant digits. ND = no data. SCC = Source Classification Code.

[b] References 2,5-7,9-10,12-13,15-16. Total liquid drift is water droplets entrained in the cooling tower exit air stream. Factors are for % of circulating water flow (10^{-2} L drift/L [10^{-2} gal drift/gal] water flow) and g drift/daL (lb drift/10^3 gal) circulating water flow. 0.12 g/daL = 0.1 lb/10^3 gal; 1 daL = 10^1 L.

[c] See discussion in text on how to use the table to obtain PM-10 emission estimates. Values shown above are the arithmetic average of test results from References 2,4,8, and 11-14, and they imply an effective TDS content of approximately 12,000 parts per million (ppm) in the circulating water.

[d] See Figure 13.4-1 and Figure 13.4-2. Additional SCCs for wet cooling towers of unspecified draft type are 3-85-001-10 and 3-85-002-10.

[e] Expressed as g PM-10/daL (lb PM-10/10^3 gal) circulating water flow.

parameter for the cooling tower water (such as conductivity, calcium, chlorides, or phosphate) to that parameter for the make-up water. This estimated cooling tower TDS can be used to calculate the PM-10 emission factor as above. If neither of these methods can be used, the arithmetic average PM-10 factor given in Table 13.4-1 can be used. Table 13.4-1 presents the arithmetic average PM-10 factor calculated from the test data in References 2, 4, 8, and 11 - 14. Note that this average corresponds to an effective cooling tower recirculating water TDS content of approximately 11,500 ppm for induced draft towers. (This can be found by dividing the total liquid drift factor into the PM-10 factor.)

As an alternative approach, if TDS data are unavailable for an induced draft tower, a value may be selected from Table 13.4-2 and then be combined with the total liquid drift factor in Table 13.4-1 to determine an apparent PM-10 factor.

As shown in Table 13.4-2, available data do not suggest that there is any significant difference between TDS levels in counter and cross flow towers. Data for natural draft towers are not available.

Table 13.4-2. SUMMARY STATISTICS FOR TOTAL DISSOLVED SOLIDS (TDS) CONTENT IN CIRCULATING WATER[a]

Type Of Draft	No. Of Cases	Range Of TDS Values (ppm)	Geometric Mean TDS Value (ppm)
Counter Flow	10	3700 - 55,000	18,500
Cross Flow	7	380 - 91,000	24,000
Overall[b]	17	380 - 91,000	20,600

[a] References 2,4,8,11-14.
[b] Data unavailable for natural draft towers.

References For Section 13.4

1. *Development Of Particulate Emission Factors For Wet Cooling Towers*, EPA Contract No. 68-D0-0137, Midwest Research Institute, Kansas City, MO, September 1991.

2. *Cooling Tower Test Report, Drift And PM-10 Tests T89-50, T89-51, And T89-52*, Midwest Research Institute, Kansas City, MO, February 1990.

3. *Cooling Tower Test Report, Typical Drift Test,* Midwest Research Institute, Kansas City, MO, January 1990.

4. *Mass Emission Measurements Performed On Kerr-McGee Chemical Corporation's Westend Facility*, Kerr-McGee Chemical Corporation, Trona, CA, And Environmental Systems Corporation, Knoxville, TN, December 1989.

5. Confidential Cooling Tower Drift Test Report For Member Of The Cooling Tower Institute, Houston, TX, Midwest Research Institute, Kansas City, MO, January 1989.

6. Confidential Cooling Tower Drift Test Report For Member Of The Cooling Tower Institute, Houston, TX, Midwest Research Institute, Kansas City, MO, October 1988.

7. Confidential Cooling Tower Drift Test Report For Member Of The Cooling Tower Institute, Houston, TX, Midwest Research Institute, Kansas City, MO, August 1988.

8. *Report Of Cooling Tower Drift Emission Sampling At Argus And Sulfate #2 Cooling Towers*, Kerr-McGee Chemical Corporation, Trona, CA, and Environmental Systems Corporation, Knoxville, TN, February 1987.

9. Confidential Cooling Tower Drift Test Report For Member Of The Cooling Tower Institute, Houston, TX, Midwest Research Institute, Kansas City, MO, February 1987.

10. Confidential Cooling Tower Drift Test Report For Member Of The Cooling Tower Institute, Houston, TX, Midwest Research Institute, Kansas City, MO, January 1987.

11. *Isokinetic Droplet Emission Measurements Of Selected Induced Draft Cooling Towers*, Kerr-McGee Chemical Corporation, Trona, CA, and Environmental Systems Corporation, Knoxville, TN, November 1986.

12. Confidential Cooling Tower Drift Test Report For Member Of The Cooling Tower Institute, Houston, TX, Midwest Research Institute, Kansas City, MO, December 1984.

13. Confidential Cooling Tower Drift Test Report For Member Of The Cooling Tower Institute, Houston, TX, Midwest Research Institute, Kansas City, MO, August 1984.

14. Confidential Cooling Tower Drift Test Report, Midwest Research Institute, Kansas City, MO, November 1983.

15. *Chalk Point Cooling Tower Project*, Volumes 1 and 2, JHU PPSP-CPCTP-16, John Hopkins University, Laurel, MD, August 1977.

16. *Comparative Evaluation Of Cooling Tower Drift Eliminator Performance*, MIT-EL 77-004, Energy Laboratory And Department of Nuclear Engineering, Massachusetts Institute Of Technology, Cambridge, MA, June 1977.

17. G. O. Schrecker, *et al., Drift Data Acquired On Mechanical Salt Water Cooling Devices*, EPA-650/2-75-060, U. S. Environmental Protection Agency, Cincinnati, OH, July 1975.

United States
Environmental Protection
Agency

Industrial Environmental Research
Laboratory
Research Triangle Park NC 27711

EPA-600/7-79-251a
November 1979

EPA

Effects of Pathogenic and Toxic Materials Transported Via Cooling Device Drift - Volume 1. Technical Report

Interagency Energy/Environment R&D Program Report

FIGURE 8

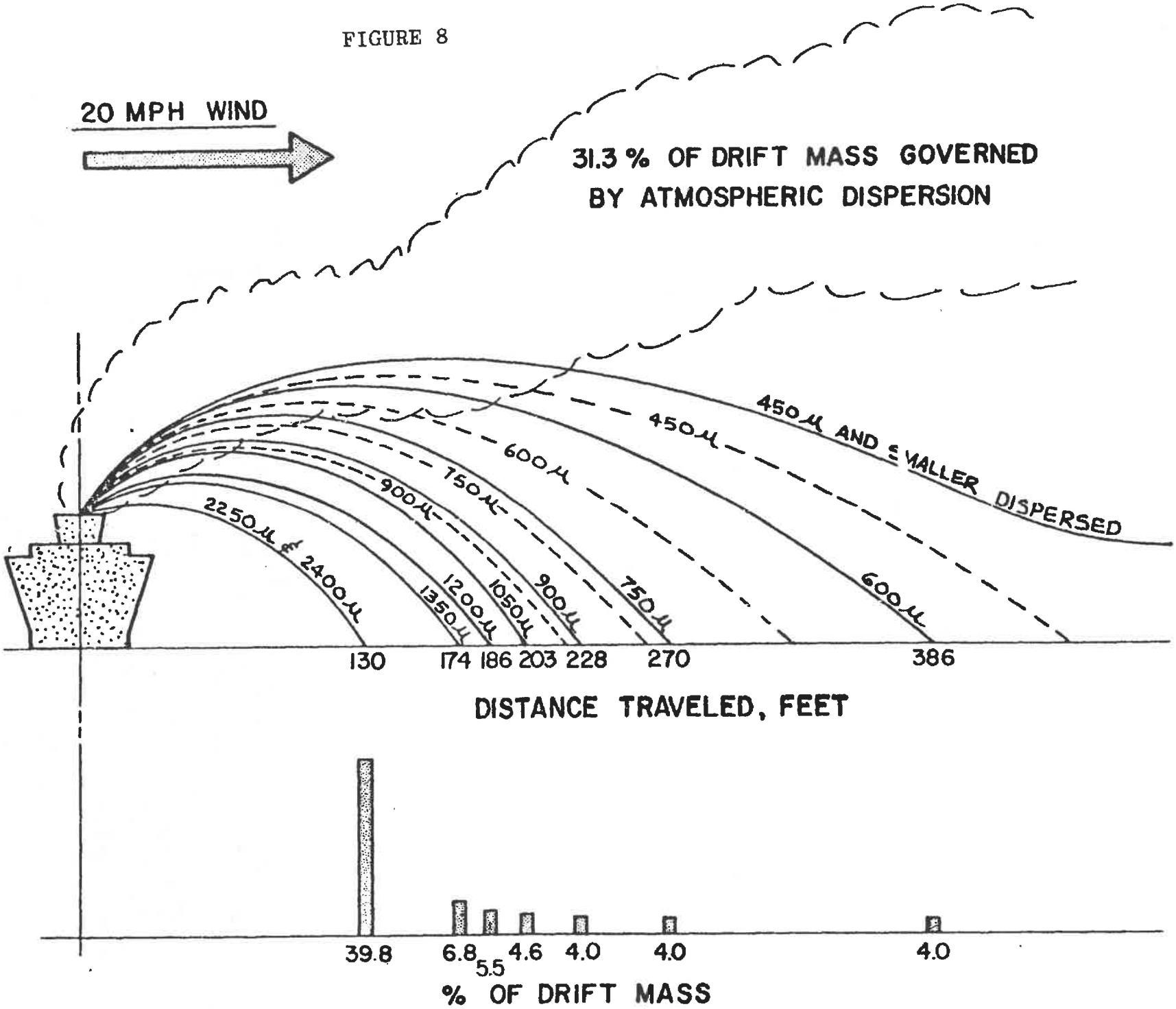

SOURCE: Wistrom and Ovard, 1973

Section 8

Map(s)

A map such as a 7.5 minute topographic quadrangle showing the exact location of the source. The map shall also include the following:

The UTM or Longitudinal coordinate system on both axes	An indicator showing which direction is north
A minimum radius around the plant of 0.8km (0.5 miles)	Access and haul roads
Topographic features of the area	Facility property boundaries
The name of the map	The area which will be restricted to public access
A graphical scale	

A topographic map is attached.

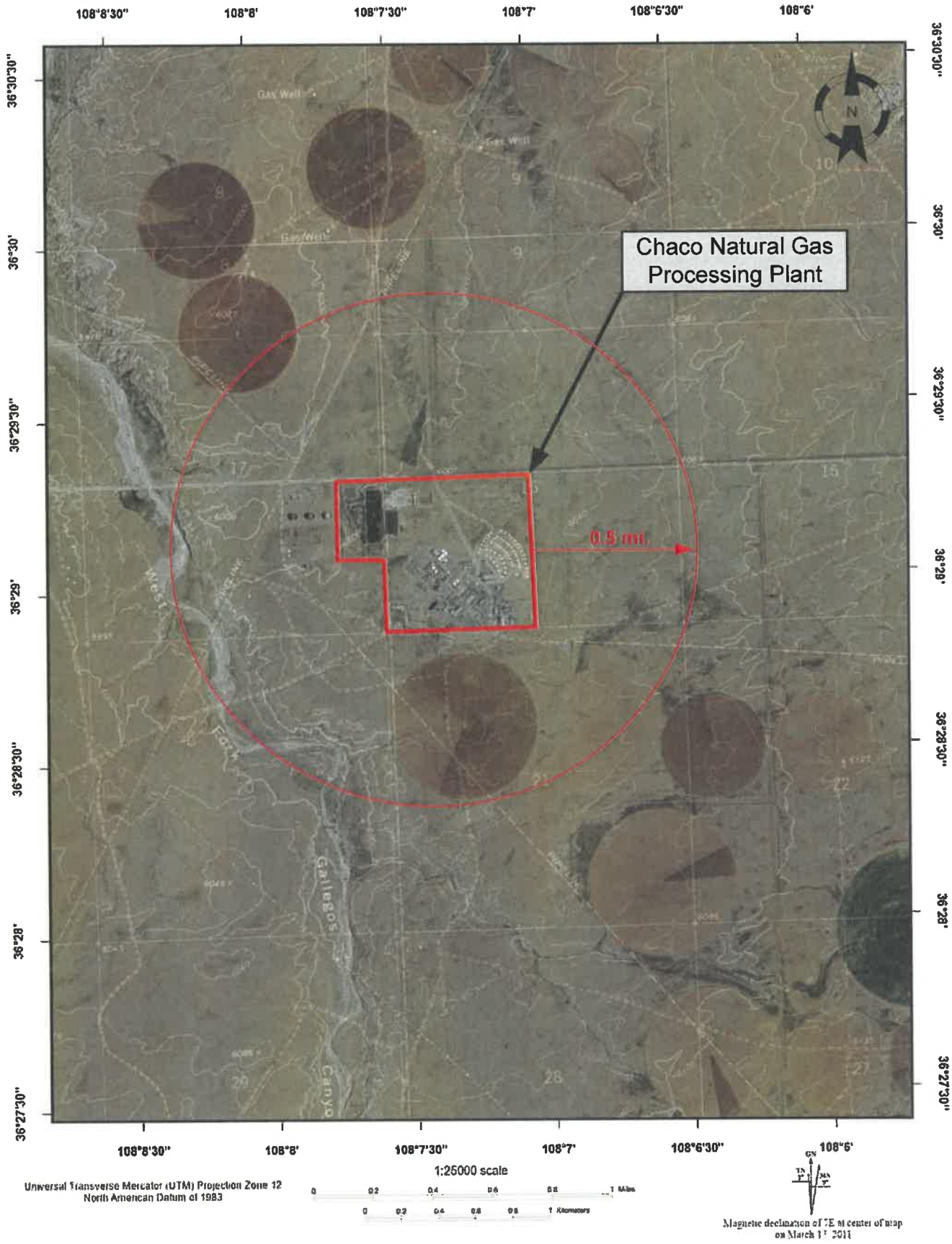

ALLIANT ENVIRONMENTAL, LLC			**Area Map**	**Enterprise Field Services, LLC**		
Scale: 1:25,000	Drawn by: MDF	Date: 6/14/2017	**Chaco Natural Gas Processing Plant** N 36° 28' 60.0" Latitude W 108° 7' 13.0" Longitude	Project No.: 066-024	File Name: **Chaco Figures**	Figure: Section 8
	Chk'd by:	Date:				

Section 9

Proof of Public Notice

(for NSR applications submitting under 20.2.72 or 20.2.74 NMAC)
(This proof is required by: 20.2.72.203.A.14 NMAC "Documentary Proof of applicant's public notice")

☐ **I have read the AQB "Guidelines for Public Notification for Air Quality Permit Applications"** This document provides detailed instructions about public notice requirements for various permitting actions. It also provides public notice examples and certification forms. Material mistakes in the public notice will require a re-notice before issuance of the permit.

Unless otherwise allowed elsewhere in this document, the following items document proof of the applicant's Public Notification. Please include this page in your proof of public notice submittal with checkmarks indicating which documents are being submitted with the application.

New Permit and **Significant Permit Revision** public notices must include all items in this list.

Technical Revision public notices require only items 1, 5, 9, and 10.

Per the Guidelines for Public Notification document mentioned above, include:

1. ☐ A copy of the certified letter receipts with post marks (20.2.72.203.B NMAC)
2. ☐ A list of the places where the public notice has been posted in at least four publicly accessible and conspicuous places, including the proposed or existing facility entrance. (e.g: post office, library, grocery, etc.)
3. ☐ A copy of the property tax record (20.2.72.203.B NMAC).
4. ☐ A sample of the letters sent to the owners of record.
5. ☐ A sample of the letters sent to counties, municipalities, and Indian tribes.
6. ☐ A sample of the public notice posted and a verification of the local postings.
7. ☐ A table of the noticed citizens, counties, municipalities and tribes and to whom the notices were sent in each group.
8. ☐ A copy of the public service announcement (PSA) sent to a local radio station and documentary proof of submittal.
9. ☐ A copy of the classified or legal ad including the page header (date and newspaper title) or its affidavit of publication stating the ad date, and a copy of the ad. When appropriate, this ad shall be printed in both English and Spanish.
10. ☐ A copy of the display ad including the page header (date and newspaper title) or its affidavit of publication stating the ad date, and a copy of the ad. When appropriate, this ad shall be printed in both English and Spanish.
11. ☐ A map with a graphic scale showing the facility boundary and the surrounding area in which owners of record were notified by mail. This is necessary for verification that the correct facility boundary was used in determining distance for notifying land owners of record.

This is a Title V Renewal application; there are no public notice requirements.

Section 10

Written Description of the Routine Operations of the Facility

A written description of the routine operations of the facility. Include a description of how each piece of equipment will be operated, how controls will be used, and the fate of both the products and waste generated. For modifications and/or revisions, explain how the changes will affect the existing process. In a separate paragraph describe the major process bottlenecks that limit production. The purpose of this description is to provide sufficient information about plant operations for the permit writer to determine appropriate emission sources.

The purpose of Chaco Natural Gas Processing Plant is to recover marketable liquids and remove water from natural gas. The facility is capable of processing approximately 700 MMscfd of gas from Enterprise Field Services' San Juan Basin gathering system. The gas is compressed, dehydrated, and then processed to extract natural gas liquids in a cryogenic liquids extraction plant. Liquids recovered in the cryogenic plant are treated to remove CO_2 and H_2S, and the very small quantity H_2S from the treater tail gas will be sent to a flare. The extracted natural gas liquids, a mixture of propane, butanes, and natural gasoline, are delivered into a liquids pipeline for shipment.

Section 11

Source Determination

Source submitting under 20.2.70, 20.2.72, 20.2.73, and 20.2.74 NMAC

Sources applying for a construction permit, PSD permit, or operating permit shall evaluate surrounding and/or associated sources (including those sources directly connected to this source for business reasons) and complete this section. Responses to the following questions shall be consistent with the Air Quality Bureau's permitting guidance, Single Source Determination Guidance, which may be found on the Applications Page in the Permitting Section of the Air Quality Bureau website.

Typically, buildings, structures, installations, or facilities that have the same SIC code, that are under common ownership or control, and that are contiguous or adjacent constitute a single stationary source for 20.2.70, 20.2.72, 20.2.73, and 20.2.74 NMAC applicability purposes. Submission of your analysis of these factors in support of the responses below is optional, unless requested by NMED.

A. Identify the emission sources evaluated in this section (list and describe)**:**

Refer to Table 2-A.

B. Apply the 3 criteria for determining a single source:

SIC Code: Surrounding or associated sources belong to the same 2-digit industrial grouping (2-digit SIC code) as this facility, OR surrounding or associated sources that belong to different 2-digit SIC codes are support facilities for this source.

☑ **Yes** ☐ **No**

Common Ownership or Control: Surrounding or associated sources are under common ownership or control as this source.

☑ **Yes** ☐ **No**

Contiguous or Adjacent: Surrounding or associated sources are contiguous or adjacent with this source.

☑ **Yes** ☐ **No**

C. Make a determination:

☑ The source, as described in this application, constitutes the entire source for 20.2.70, 20.2.72, 20.2.73, or 20.2.74 NMAC applicability purposes. If in "A" above you evaluated only the source that is the subject of this application, all "**YES**" boxes should be checked. If in "A" above you evaluated other sources as well, you must check **AT LEAST ONE** of the boxes "**NO**" to conclude that the source, as described in the application, is the entire source for 20.2.70, 20.2.72, 20.2.73, and 20.2.74 NMAC applicability purposes.

☐ The source, as described in this application, **does not** constitute the entire source for 20.2.70, 20.2.72, 20.2.73, or 20.2.74 NMAC applicability purposes (A permit may be issued for a portion of a source). The entire source consists of the following facilities or emissions sources (list and describe):

Section 13

Determination of State & Federal Air Quality Regulations

This section lists each state and federal air quality regulation that may apply to your facility and/or equipment that are stationary sources of regulated air pollutants.

Not all state and federal air quality regulations are included in this list. Go to the Code of Federal Regulations (CFR) or to the Air Quality Bureau's regulation page to see the full set of air quality regulations.

Required Information for Specific Equipment:
For regulations that apply to specific source types, in the 'Justification' column **provide any information needed to determine if the regulation does or does not apply**. **For example**, to determine if emissions standards at 40 CFR 60, Subpart IIII apply to your three identical stationary engines, we need to know the construction date as defined in that regulation; the manufacturer date; the date of reconstruction or modification, if any; if they are or are not fire pump engines; if they are or are not emergency engines as defined in that regulation; their site ratings; and the cylinder displacement.

Required Information for Regulations that Apply to the Entire Facility:
See instructions in the 'Justification' column for the information that is needed to determine if an 'Entire Facility' type of regulation applies (e.g. 20.2.70 or 20.2.73 NMAC).

Regulatory Citations for Regulations That Do Not, but Could Apply:
If there is a state or federal air quality regulation that does not apply, but you have a piece of equipment in a source category for which a regulation has been promulgated, you must **provide the low level regulatory citation showing why your piece of equipment is not subject to or exempt from the regulation. For example** if you have a stationary internal combustion engine that is not subject to 40 CFR 63, Subpart ZZZZ because it is an existing 2 stroke lean burn stationary RICE with a site rating of more than 500 brake HP located at a major source of HAP emissions, your citation would be 40 CFR 63.6590(b)(3)(i). **We don't want a discussion of every non-applicable regulation, but if it is possible a regulation could apply, explain why it does not. For example,** if your facility is a power plant, you do not need to include a citation to show that 40 CFR 60, Subpart OOO does not apply to your non-existent rock crusher.

Regulatory Citations for Emission Standards:
For each unit that is subject to an emission standard in a source specific regulation, such as 40 CFR 60, Subpart OOO or 40 CFR 63, Subpart HH, include the low level regulatory citation of that emission standard. Emission standards can be numerical emission limits, work practice standards, or other requirements such as maintenance. **Here are examples:** a glycol dehydrator is subject to the general standards at 63.764C(1)(i) through (iii); an engine is subject to 63.6601, Tables 2a and 2b; a crusher is subject to 60.672(b), Table 3 and all transfer points are subject to 60.672(e)(1)

Federally Enforceable Conditions:
All federal regulations are federally enforceable. All Air Quality Bureau State regulations are federally enforceable except for the following: affirmative defense portions at 20.2.7.6.B, 20.2.7.110(B)(15), 20.2.7.11 through 20.2.7.113, 20.2.7.115, and 20.2.7.116; 20.2.37; 20.2.42; 20.2.43; 20.2.62; 20.2.63; 20.2.86; 20.2.89; and 20.2.90 NMAC. Federally enforceable means that EPA can enforce the regulation as well as the Air Quality Bureau and federally enforceable regulations can count toward determining a facility's potential to emit (PTE) for the Title V, PSD, and nonattainment permit regulations.

INCLUDE ANY OTHER INFORMATION NEEDED TO COMPLETE AN APPLICABILITY DETERMINATION OR THAT IS RELEVENT TO YOUR FACILITY'S NOTICE OF INTENT OR PERMIT.

EPA Applicability Determination Index for 40 CFR 60, 61, 63, etc: http://cfpub.epa.gov/adi/

Table for STATE REGULATIONS:

STATE REGU-LATIONS CITATION	Title	Applies? Enter Yes or No	Unit(s) or Facility	JUSTIFICATION:
20.2.1 NMAC	General Provisions	Yes	Facility	General Provisions apply to Title V permit applications.
20.2.3 NMAC	Ambient Air Quality Standards NMAAQS	Yes	Facility	As this is a Title V application, the requirements of this part are not applicable to this application (exemption at 20.2.3.9 NMAC). But as s the facility does have an NSR permit, 20.2.3 NMAC is applicable to the site. 20.2.3 NMAC is a State Implementation Plan (SIP) approved regulation that limits the maximum allowable concentration of Total Suspended Particulates, Sulfur Compounds, Carbon Monoxide and Nitrogen Dioxide.
20.2.7 NMAC	Excess Emissions	Yes	Facility	All Title V major sources are subject to Air Quality Control Regulations, as defined in 20.2.7 NMAC, and are thus subject to the requirements of this regulation.
20.2.33 NMAC	Gas Burning Equipment - Nitrogen Dioxide	No	N/A	This facility does not have gas burning with a heat input of greater than 1,000,000 million British Thermal Units per year per unit.
20.2.34 NMAC	Oil Burning Equipment: NO_2	No	N/A	This facility does not have oil burning equipment with a heat input of greater than 1,000,000 million British Thermal Units per year per unit.
20.2.35 NMAC	Natural Gas Processing Plant – Sulfur	No	N/A	This facility is not subject to the requirements of NMAC 2.35 for "New Natural **Gas Processing** Plants for which a modification commenced on or after July 1, 1974.
20.2.38 NMAC	Hydrocarbon Storage Facility	Yes	TK-28, TK-29	Facility is a 'petroleum processing facility' as defined by 20.2.38 NMAC with tanks (TK-28 and TK-29) subject to subpart 109.
20.2.39 NMAC	Sulfur Recovery Plant - Sulfur	No	N/A	The facility is not equipped with a sulfur recovery unit; this regulation does not apply.
20.2.61.1 09 NMAC	Smoke & Visible Emissions	Yes	8, 11, 12, 13, 14, 17, 18, 30, 32, 33, 34, 35, 36, 37, 42, 43, 44, 46, 48, 49, 50, 51	Units 8, 11, 12, 13, 14, 17, 18, 30, 32, 33, 34, 35, 36, 37, 42, 43, 44, 46, 48, 49, 50, and 51were considered 'new petroleum processing facilities' under 20.2.37.7.C NMAC, which has been repealed. These units will comply 20.2.61.
20.2.70 NMAC	Operating Permits	Yes	Facility	This facility is considered a major source under 20.2.70 NMAC and currently operates under Title V Permit Number P116-R2.
20.2.71 NMAC	Operating Permit Fees	Yes	Facility	As this facility is subject to 20.2.70 NMAC, it is subject to 20.2.71 NMAC.
20.2.72 NMAC	Construction Permits	Yes	Facility	This facility is subject to 20.2.72 NMAC and NSR Permit Number 1555-M6.
20.2.73 NMAC	NOI & Emissions Inventory Requirements	Yes	Facility	Emissions Inventory Reporting: 20.2.73.300 NMAC applies. All Title V major sources meet the applicability requirements of 20.2.73.300 NMAC.
20.2.74 NMAC	Permits – Prevention of Significant Deterioration (PSD)	Yes	Facility	This facility is PSD major as it is a stationary source not listed in Table 1 of this Part (20.2.74.501 NMAC) and which emits or has the potential to emit two hundred fifty (250) tons per year or more of any regulated pollutant.
20.2.75 NMAC	Construction Permit Fees	No	Facility	This facility is subject to 20.2.71 NMAC (Operating Permit Emission Fees) and, therefore is not subject to the requirements of this regulations per 20.2.75.11.E.
20.2.77 NMAC	New Source Performance	Yes	35, 36, 37, 49, 8, 11, 17, 18, 32, 33, 34, 42, 43, 44, 50, 51, Cryo Plant, F-001, F-002, F-003, F-004, F-005, F-006, F-008, F-009	This is a stationary source that is subject to the requirements of 40 CFR Part 60. Subparts A, GG, and KKK apply.

STATE REGU-LATIONS CITATION	Title	Applies? Enter Yes or No	Unit(s) or Facility	JUSTIFICATION:
20.2.78 NMAC	Emission Standards for HAPS	No	N/A	There are no Subparts of 40 CFR Part 61 that apply to equipment at this facility.
20.2.79 NMAC	Permits – Nonattainment Areas	No	N/A	This facility is not located in a non-attainment area, therefore, this regulation does not apply.
20.2.80 NMAC	Stack Heights	No	N/A	This regulation is applicable if cited as applicable in NSR Permit 1555-M6. This regulation is not cited as applicable in NSR 1555-M6, therefore, this regulation does not apply.
20.2.82 NMAC	MACT Standards for source categories of HAPS	Yes	51b, F-005, F-009, 30, 48, 51a	This regulation applies to all sources emitting hazardous air pollutants, which are subject to the requirements of 40 CFR Part 63. Subparts A, HH, ZZZZ, and DDDDD apply.

Table for Applicable FEDERAL REGULATIONS:

FEDERAL REGU-LATIONS CITATION	Title	Applies? Enter Yes or No	Unit(s) or Facility	JUSTIFICATION:
40 CFR 50	NAAQS	Yes	Facility	Defined as applicable pursuant to 20.2.70.7.E.11. Any national ambient air quality standard applies to the entire facility.
NSPS 40 CFR 60, Subpart A	General Provisions	Yes	35, 36, 37, 49, 8, 11, 17, 18, 32, 33, 34, 42, 43, 44, 50, 51, Cryo Plant, F-001, F-002, F-003, F-004, F-005, F-006, F-008, F-009	Applies if any other NSPS subpart applies. Turbines 35, 36, 37; Cryogenic processing train; Inlet compressors in wet gas service; Inlet flares 42, 43, 44 are all subject to a NSPS and, therefore, are subject to 40 CFR 60, Subpart A.
NSPS 40 CFR60.40a, Subpart Da	Subpart Da, Performance Standards for **Electric Utility Steam Generating Units**	No	N/A	Establishes PM, SO_2 and NOx emission limits/standards of performance for electric utility steam generating units constructed after 9/18/1978. Chaco does not have any electric utility steam generating units.
NSPS 40 CFR60.40b Subpart Db	**Electric Utility Steam Generating Units**	No	N/A	Establishes NOx emission limit for boilers which exceed the 100 MMBtu/hr threshold and are constructed after the 6/19/1984 applicability date. Chaco does not have any electric utility steam generating units.
NSPS 40 CFR 60, Subpart Ka	Standards of Performance for **Storage Vessels for Petroleum Liquids** for which Construction, Reconstruction, or Modification Commenced After May 18, 1978, and **Prior** to July 23, 1984	No	N/A	There are no tanks at this facility for which construction was commenced between May 18, 1978 and July 23, 1984.
NSPS 40 CFR 60, Subpart Kb	Standards of Performance for **Volatile Organic Liquid Storage Vessels** (Including Petroleum Liquid Storage Vessels) for Which Construction, Reconstruction, or Modification Commenced **After** July 23, 1984	No	N/A	TK-28 and TK-29 have capacity greater than 75 cubic meters, but less than 1589.874 cubic meters. These tanks store condensate prior to custody transfer. Per 60.110b(d)(4), this subpart does not apply to these tanks.

FEDERAL REGU-LATIONS CITATION	Title	Applies? Enter Yes or No	Unit(s) or Facility	JUSTIFICATION:
NSPS 40 CFR 60.330 Subpart GG	**Stationary Gas Turbines**	Yes	35, 36, 37, 49	Units 35, 36, 37, and 49 are subject to NSPS GG because they have a heat energy greater than the 10 MMBtu/hour threshold and were installed after the October 3, 1977 applicability date
NSPS 40 CFR 60, Subpart KKK	Leaks of VOC from **Onshore Gas Plants**	Yes	8, 11, 17, 18, 32, 33, 34, 42, 43, 44, 50, 51, Cryo Plant, F-001, F-002, F-003, F-004, F-005, F-006, F-008 F-009	Facility is an Onshore Gas Plant with the following portions subject to Subpart KKK: All components of the cryogenic processing train, including refrigerant compressors (units 32-34), the deethanizer, and the portions of process fugitive emissions in the cryogenic plant. Glycol dehydrator (unit 51) Inlet compressors in wet gas service, including Bisti #8 (unit 50), A Plant (units 1-5, 8 & 11), C Plant (units 17 & 18), E Plant (electric compression) Inlet flares (units 42 & 43) and cryogenic plant flare (unit 44) are used as control devices for KKK units. Subpart KKK does not apply to the MDEA treatment unit as it is in liquid service. Subpart KKK does not apply to compressors or equipment in residue gas service as this gas contains no VOCs. Finally, Subpart KKK will not apply to equipment to be removed from service (B plant, thermal oxidizer unit 46)
NSPS 40 CFR Part 60 Subpart LLL	Standards of Performance for **Onshore Natural Gas Processing**: SO_2 Emissions	No	N/A	Although the facility is a natural gas processing plant, it is not subject to Subpart LLL because the MDEA treatment unit is in liquid service and accordingly does not meet the definition of a sweetening unit given in Subpart LLL.
NSPS 40 CFR Part 60 Subpart OOOO	Standards of Performance for Crude Oil and Natural Gas Production, Transmission, and Distribution for which construction, modification or reconstruction commenced after August 23, 2011 and before September 18, 2015	No	N/A	This regulation establishes standards of performance for crude oil and natural gas production, transmission and distribution. The facility does not have any affected units that have been modified or reconstructed on or after August 23, 2011.
NSPS 40 CFR Part 60 Subpart OOOOa	Standards of Performance for Crude Oil and Natural Gas Facilities for which Construction, Modification or Reconstruction Commenced After September 18, 2015	No	N/A	The facility does not have any affected units that have been modified or reconstructed after September 18, 2015.
NSPS 40 CFR 60 Subpart IIII	Standards of performance for Stationary Compression Ignition Internal Combustion Engines	No	N/A	There are no stationary compression ignition internal combustion engines at this facility.
NSPS 40 CFR Part 60 Subpart JJJJ	Standards of Performance for Stationary Spark Ignition Internal Combustion Engines	No	N/A	None of the SI engines are subject to JJJJ because they have not been constructed, modified, or reconstructed on or after the June 12, 2006 applicability date.
NSPS 40 CFR 60 Subpart TTTT	Standards of Performance for Greenhouse Gas Emissions for Electric Generating Units	No	N/A	There are no electric generating units, as defined by this subpart at this facility.
NSPS 40 CFR 60 Subpart UUUU	Emissions Guidelines for Greenhouse Gas Emissions and Compliance Times for Electric Utility Generating Units	No	N/A	There are no electric generating units, as defined by this subpart at this facility.

FEDERAL REGU-LATIONS CITATION	Title	Applies? Enter Yes or No	Unit(s) or Facility	JUSTIFICATION:
NSPS 40 CFR 60, Subparts WWW, XXX, Cc, and Cf	Standards of performance for Municipal Solid Waste (MSW) Landfills	No	N/A	This facility is not a MSW Landfill. This regulation does not apply.
NESHAP 40 CFR 61 Subpart A	General Provisions	No	N/A	Chaco does not emit or have threshold quantities of regulated substances at the facility and/or the facility is not involved in the triggering activity. Subpart M could potentially apply in the event of asbestos demolition; this subpart does not currently apply.
NESHAP 40 CFR 61 Subpart E	National Emission Standards for **Mercury**	No	N/A	Not applicable as this facility does not process mercury ore to recover mercury, use mercury chlor-alkali cells to produce chlorine gas and alkali metal hydroxide, and incinerate or dry wastewater treatment plant sludge.
NESHAP 40 CFR 61 Subpart V	National Emission Standards for **Equipment Leaks** (Fugitive Emission Sources)	No	N/A	The provisions of this subpart apply to each of the following sources that are intended to operate in volatile hazardous air pollutant (VHAP) service: pumps, compressors, pressure relief devices, sampling connection systems, open-ended valves or lines, valves, connectors, surge control vessels, bottoms receivers, and control devices or systems required by this subpart. VHAP service means a piece of equipment either contains or contacts a fluid (liquid or gas) that is at least 10 percent by weight of VHAP. VHAP means a substance regulated under this subpart for which a standard for equipment leaks of the substance has been promulgated. There is no equipment at this facility that operates in VHAP service.
MACT 40 CFR 63, Subpart A	General Provisions	Yes	51b, F-005, F-009, 30, 48, 51a	Units at this facility are subject to MACT HH, ZZZZ, and DDDDD. Therefore, this regulation applies.
MACT 40 CFR 63.760 Subpart HH	Oil and Natural Gas Production Facilities	Yes	51b, F-005, F-009	This facility is Subject to the requirements of 40 CFR 63 Subpart HH Facility was major for HAPS in Permit P116 issued November 18, 2008. Once in always in. Subpart HH applies to the glycol dehydration unit (unit 51b). Subpart HH also applies to tank fugitives (unit F-009) and fugitives in condensate service (unit F-005) since the weight % of HAPS in condensate designates the equipment as "in VHAP service." Subpart HH does not apply to the condensate tanks (TK28 and TK29) as they do not have an annual average throughput equal to or greater than 79,500 liters as specified in the definition of a "storage vessels with the potential for flash emissions" in 40 CFR 63.761. Subpart HH is not applicable to the compressors or other equipment at Chaco because the units are not "in VHAP service".
MACT 40 CFR 63 Subpart HHH	National Emission Standards for Hazardous Air Pollutants from Natural Gas Transmission and Storage Facilities	No	N/A	Chaco is not a natural gas transmission facility; this subpart does not apply.
MACT 40 CFR 63 Subpart DDDDD	National Emission Standards for Hazardous Air Pollutants for Major Industrial, Commercial, and Institutional Boilers & Process Heaters	Yes	48, 51a	This subpart establishes national emission limitations and work practice standards for HAPs emitted from industrial, commercial, and institutional boilers and process heaters located at major sources of HAPs. The facility is a major source of HAPs and has two units (48, 51a) subject to this subpart.
MACT 40 CFR 63 Subpart UUUUU	National Emission Standards for Hazardous Air Pollutants Coal & Oil Fire Electric Utility Steam Generating Unit	No	N/A	There are no electric utility steam generating units at this facility.

FEDERAL REGU-LATIONS CITATION	Title	Applies? Enter Yes or No	Unit(s) or Facility	JUSTIFICATION:
MACT 40 CFR 63 Subpart YYYY	National Emission Standards for Hazardous Air Pollutants for Stationary Combustion Turbines	No	N/A	This subpart establishes national emission limitations and operating limitations for HAPs from stationary combustion turbines located at major sources of HAP emissions. The facility does not have any turbines subject to this subpart as all units are considered existing units (constructed, modified or reconstructed before Jan. 14, 2003). As stated in 63.6090(b)(4), existing stationary combustion turbines in all categories do not have to meet the requirements of this subpart or of subpart A.
MACT 40 CFR 63 Subpart ZZZZ	National Emissions Standards for Hazardous Air Pollutants for Stationary Reciprocating Internal Combustion Engines **(RICE MACT)**	Yes	30, 50	The listed units must comply with this Subpart. All other facility engines are existing engines (either 2SLB, 4SLB, CI, or emergency) at a major source of HAPs and accordingly not subject to any requirements of MACT ZZZZ. Specifically, per 40 CFR 63.6590(b)(3), MACT ZZZZ imposes no requirements on existing 2SLB, 4SLB, CI, emergency, and limited-use stationary RICE.
40 CFR 64	**Compliance Assurance Monitoring**	No	N/A	This requirement does not apply. In general terms, an affected unit must be subject to an emission limit for a pollutant; use a control device to achieve compliance with that limit; and have a pre-control potential to emit for that pollutant great than major-source level.
40 CFR 68	**Chemical Accident Prevention**	Yes	Facility	Chaco Gas Plant is subject to 40 CFR 68 because it handles greater than threshold quantities of certain flammable substances (condensate).
Title IV – Acid Rain 40 CFR 72	**Acid Rain**	No	N/A	Does not apply as this facility does not generate commercial electric power or electric power for sale.
Title IV – Acid Rain 40 CFR 73	**Sulfur Dioxide** Allowance Emissions	No	N/A	Does not apply as this facility does not generate commercial electric power or electric power for sale.
Title IV- Acid Rain 40 CFR 75	**Continuous Emissions Monitoring**	No	N/A	Does not apply as this facility does not generate commercial electric power or electric power for sale.
Title IV – Acid Rain 40 CFR 76	**Acid Rain** Nitrogen Oxides **Emission Reduction Program**	No	N/A	Does not apply as this facility does not generate commercial electric power or electric power for sale.
Title VI – 40 CFR 82	Protection of **Stratospheric Ozone**	No	N/A	Not Applicable –facility does not "service", "maintain" or "repair" class I or class II appliances nor "disposes" of the appliances. Note: Disposal definition in 82.152: Disposal means the process leading to and including: (1) The discharge, deposit, dumping or placing of any discarded appliance into or on any land or water; (2) The disassembly of any appliance for discharge, deposit, dumping or placing of its discarded component parts into or on any land or water; or (3) The disassembly of any appliance for reuse of its component parts. "Major maintenance, service, or repair means" any maintenance, service, or repair that involves the removal of any or all of the following appliance components: compressor, condenser, evaporator, or auxiliary heat exchange coil; or any maintenance, service, or repair that involves uncovering an opening of more than four (4) square inches of "flow area" for more than 15 minutes.

Section 14

Operational Plan to Mitigate Emissions

(Submitting under 20.2.70, 20.2.72, 20.2.74 NMAC)

☑ **Title V Sources** (20.2.70 NMAC): By checking this box and certifying this application the permittee certifies that it has developed an **Operational Plan to Mitigate Emissions During Startups, Shutdowns, and Emergencies** defining the measures to be taken to mitigate source emissions during startups, shutdowns, and emergencies as required by 20.2.70.300.D.5(f) and (g) NMAC. This plan shall be kept on site to be made available to the Department upon request. This plan should not be submitted with this application.

☐ **NSR** (20.2.72 NMAC), **PSD** (20.2.74 NMAC) **& Nonattainment** (20.2.79 NMAC) **Sources:** By checking this box and certifying this application the permittee certifies that it has developed an **Operational Plan to Mitigate Source Emissions During Malfunction, Startup, or Shutdown** defining the measures to be taken to mitigate source emissions during malfunction, startup, or shutdown as required by 20.2.72.203.A.5 NMAC. This plan shall be kept on site to be made available to the Department upon request. This plan should not be submitted with this application.

☑ **Title V** (20.2.70 NMAC), **NSR** (20.2.72 NMAC), **PSD** (20.2.74 NMAC) **& Nonattainment** (20.2.79 NMAC) **Sources:** By checking this box and certifying this application the permittee certifies that it has established and implemented a Plan to Minimize Emissions During Routine or Predictable Startup, Shutdown, and Scheduled Maintenance through work practice standards and good air pollution control practices as required by 20.2.7.14.A and B NMAC. This plan shall be kept on site or at the nearest field office to be made available to the Department upon request. This plan should not be submitted with this application.

OPERATIONAL PLAN TO MITIGATE EMISSIONS

ENTERPRISE PRODUCTS ▪ CHACO GAS PLANT

Pursuant to 20.2.7. 14.300.D.5(f) NMAC
Operational Plan to Mitigate Emissions During Startups, Shutdowns and Emergencies

and

Pursuant to 20.2.72.203.A.5 NMAC
Operational Plan to Mitigate Source Emissions During Malfunction, Startup or Shutdown

and

Pursuant to 20.2.7.15.A and B NMAC
Plan to Minimize Emissions During Routine or Predictable Startup, Shutdown and Scheduled Maintenance

OPERATIONAL PLAN
TO MINIMIZE EMISSIONS DURING ROUTINE OR PREDICTABLE STARTUP, SHUTDOWN & MAINTENANCE;
AND
TO MITIGATE EMISSIONS DURING STARTUPS, SHUTDOWNS MALFUNCTIONS AND EMERGENCIES

CHACO GAS PLANT

Emissions during startups, shutdowns, and maintenance (SSM) will be minimized and mitigated through the use of industry standard and/or manufacturer recommended operating practices. Enterprise Field Services (Enterprise) engineers and trained technicians are responsible for the timely and effective execution of these actions. In addition, equipment at facilities are equipped with safety devices that will aid in minimizing excess emissions during non-routine operating conditions. The following summarizes Enterprise's operational plans for minimizing and mitigating excess emissions.

Maintenance

Key to minimizing excess emissions during non-routine operating conditions is minimizing the occurrence of such conditions. To this end, Enterprise has taken a pro-active approach to facility and equipment maintenance and environmental awareness. Operations personnel are aware of the importance of proper and efficient operation of equipment, and of the potential liabilities associated with improper operation. Moreover, Enterprise recognizes the economic incentives to maintain and operate equipment efficiently. Malfunctioning equipment wastes resources and costs money.

Equipment at the facility is maintained in accordance with manufacturers' recommendations, industry best operating practices, and Enterprise's own practices designed to minimize downtime and non-routine operations. Procedures exist for maintenance of each major piece of equipment; personnel are trained in proper procedures; and Enterprise's own internal review processes ensure that procedures are followed. Trained technicians routinely inspect equipment and operating parameters to maintain equipment in good working condition and to minimize emissions. As a result, non-routine operational events and consequent excess emissions are minimized.

Startup and Shutdown

Excess emissions from startup and shutdown events are brief, as the duration of the actual startup or shutdown event is relatively short. Moreover, the nature of the equipment at the facility is such that startup and shutdown events typically do not result in hourly emission rates being exceeded. While a reciprocating engine may emit CO at a much higher instantaneous rate during its initial warm-up period, the warm-up period will be of limited duration and have a negligible effect on total emissions for that hour.

However, Enterprise takes steps to minimize the number of such events, and to minimize their duration.

For example, equipment shutdowns for maintenance are performed in accordance with procedures designed to minimize the duration of shutdown events. Such procedures include the following.

- Maintenance may be scheduled for periods of low load.
- Multiple maintenance activities may be scheduled to occur simultaneously.
- Startup procedures for the engine are normally completed in less than 15 minutes, and shutdown procedures are normally completed in less than 5 minutes.
- Maintenance of pumps, filter changes, do not always require blow down of compressors. Equipment blow downs for maintenance will be vented to atmosphere when necessary to allow safe operation.

Malfunctions and Emergencies

If a malfunction of control equipment occurs the emission unit will be shut down until the control can be repaired. If an emission unit malfunctions, typically engine or turbine, the unit will normally auto shutdown. Startup and shutdown conditions associated with malfunction or emergency remain consistent with those described above. Attempts will be made to minimize emissions associated with equipment and/or pipeline contents during an emergency; however each situation will be assessed separately as safety is the first priority.

In the event that a startup, shutdown, maintenance or malfunction event violates an applicable requirement or results in emissions greater than the allowable emission rate for the affected emissions unit(s) considered over an averaging time consistent with the averaging time for the applicable emissions limit, Enterprise will report such an event pursuant to 20.2.7 NMAC where the applicable requirement that is the basis for the limit is an Air Quality Control Regulation, except NSPS or MACT.

Section 15

Alternative Operating Scenarios

(Submitting under 20.2.70, 20.2.72, 20.2.74 NMAC)

Alternative Operating Scenarios: Provide all information required by the department to define alternative operating scenarios. This includes process, material and product changes; facility emissions information; air pollution control equipment requirements; any applicable requirements; monitoring, recordkeeping, and reporting requirements; and compliance certification requirements. Please ensure applicable Tables in this application are clearly marked to show alternative operating scenario.

Construction Scenarios: When a permit is modified authorizing new construction to an existing facility, NMED includes a condition to clearly address which permit condition(s) (from the previous permit and the new permit) govern during the interval between the date of issuance of the modification permit and the completion of construction of the modification(s). There are many possible variables that need to be addressed such as: Is simultaneous operation of the old and new units permitted and, if so for example, for how long and under what restraints? In general, these types of requirements will be addressed in Section A100 of the permit, but additional requirements may be added elsewhere. Look in A100 of our NSR and/or TV permit template for sample language dealing with these requirements. Find these permit templates at: https://www.env.nm.gov/aqb/permit/aqb_pol.html. Compliance with standards must be maintained during construction, which should not usually be a problem unless simultaneous operation of old and new equipment is requested.

In this section, under the bolded title "Construction Scenarios", specify any information necessary to write these conditions, such as: conservative-realistic estimated time for completion of construction of the various units, whether simultaneous operation of old and new units is being requested (and, if so, modeled), whether the old units will be removed or decommissioned, any PSD ramifications, any temporary limits requested during phased construction, whether any increase in emissions is being requested as SSM emissions or will instead be handled as a separate Construction Scenario (with corresponding emission limits and conditions, etc.

No alternative operating scenarios are being requested with this application.

Section 16

Air Dispersion Modeling

1) Minor Source Construction (20.2.72 NMAC) and Prevention of Significant Deterioration (PSD) (20.2.74 NMAC) ambient impact analysis (modeling): Provide an ambient impact analysis as required at 20.2.72.203.A(4) and/or 20.2.74.303 NMAC and as outlined in the Air Quality Bureau's Dispersion Modeling Guidelines found on the Planning Section's modeling website. If air dispersion modeling has been waived for one or more pollutants, attach the AQB Modeling Section modeling waiver approval documentation.
2) SSM Modeling: Applicants must conduct dispersion modeling for the total short term emissions during routine or predictable startup, shutdown, or maintenance (SSM) using realistic worst case scenarios following guidance from the Air Quality Bureau's dispersion modeling section. Refer to "Guidance for Submittal of Startup, Shutdown, Maintenance Emissions in Permit Applications (http://www.env.nm.gov/aqb/permit/app_form.html) for more detailed instructions on SSM emissions modeling requirements.
3) Title V (20.2.70 NMAC) ambient impact analysis: Title V applications must specify the construction permit and/or Title V Permit number(s) for which air quality dispersion modeling was last approved. Facilities that have only a Title V permit, such as landfills and air curtain incinerators, are subject to the same modeling required for preconstruction permits required by 20.2.72 and 20.2.74 NMAC.

Air quality dispersion modeling was last submitted with the application for permit number 1555-M5.

What is the purpose of this application?	Enter an X for each purpose that applies
New PSD major source or PSD major modification (20.2.74 NMAC). See #1 above.	
New Minor Source or significant permit revision under 20.2.72 NMAC (20.2.72.219.D NMAC). See #1 above. **Note:** Neither modeling nor a modeling waiver is required for VOC emissions.	
Reporting existing pollutants that were not previously reported.	
Reporting existing pollutants where the ambient impact is being addressed for the first time.	
Title V application (new, renewal, significant, or minor modification. 20.2.70 NMAC). See #3 above.	X
Relocation (20.2.72.202.B.4 or 72.202.D.3.c NMAC)	
Minor Source Technical Permit Revision 20.2.72.219.B.1.d.vi NMAC for like-kind unit replacements.	
Other: i.e. SSM modeling. See #2 above.	
This application does not require modeling since this is a No Permit Required (NPR) application.	
This application does not require modeling since this is a Notice of Intent (NOI) application (20.2.73 NMAC).	
This application does not require modeling according to 20.2.70.7.E(11), 20.2.72.203.A(4), 20.2.74.303, 20.2.79.109.D NMAC and in accordance with the Air Quality Bureau's Modeling Guidelines.	

Check each box that applies:

☐ See attached, approved modeling **waiver for all** pollutants from the facility.
☐ See attached, approved modeling **waiver for some** pollutants from the facility.
☐ Attached in Universal Application Form 4 (UA4) is a **modeling report for all** pollutants from the facility.
☐ Attached in UA4 is a **modeling report for some** pollutants from the facility.
☑ No modeling is required.

Section 17

Compliance Test History

(Submitting under 20.2.70, 20.2.72, 20.2.74 NMAC)

To show compliance with existing NSR permits conditions, you must submit a compliance test history. The table below provides an example.

Compliance Test History Table

Unit No.	Test Description	Test Date
8	EPA Method	May 1995 August 1997
8	Portable Analyzer NOx & CO	January 2010
11	EPA Method	August 1996
11	Portable Analyzer NOx & CO	January 2010
12	EPA Method	May 1995 August 1996
12	Portable Analyzer NOx & CO	February 2010
13	EPA Method	May 1995 August 1996
13	Portable Analyzer NOx & CO	February 2010
14	EPA Method	May 1995 August 1996
14	Portable Analyzer NOx & CO	February 2010
17	EPA Method	May 1995
17	Portable Analyzer NOx & CO	February 2010
18	EPA Method	May 1995
18	Portable Analyzer NOx & CO	February 2010
32	EPA Method	August 1996
32	Portable Analyzer NOx & CO	February 2010
33	EPA Method	August 1996
33	Portable Analyzer NOx & CO	February 2010
34	EPA Method	August 1996
34	Portable Analyzer NOx & CO	January 2010
35	EPA Method	August 1996
35	Portable Analyzer NOx & CO	January 2010
36	EPA Method	November 1996
36	Portable Analyzer NOx & CO	January 2010
37	EPA Method	November 1996
37	Portable Analyzer NOx & CO	January 2010
42	EPA Method (are control devices for KKK facilities)	January 2010

Required Annual Tests:

Unit No.	Test Description	Test Date
1	NOx and CO Portable Analyzer	4/5/2011
1	NOx and CO Portable Analyzer	4/2/2012
1	NOx and CO Portable Analyzer	4/2/2013
1	NOx and CO Portable Analyzer	3/17/2014
2	NOx and CO Portable Analyzer	4/5/2011
2	NOx and CO Portable Analyzer	4/5/2012
2	NOx and CO Portable Analyzer	4/2/2013
2	NOx and CO Portable Analyzer	3/17/2014

8	NOx and CO Portable Analyzer	4/6/2011
8	NOx and CO Method 7e & 10	5/22/2012
9	NOx and CO Portable Analyzer	4/6/2011
9	NOx and CO Method 7e & 10	5/22/2012
9	NOx and CO Portable Analyzer	4/2/2013
9	NOx and CO Portable Analyzer	3/17/2014
12	NOx and CO Portable Analyzer	2/16/2011
12	NOx and CO Portable Analyzer	2/14/2012
12	NOx and CO Portable Analyzer	2/4/2013
12	NOx and CO Portable Analyzer	2/28/2014
12	NOx and CO Portable Analyzer	4/6/2015
12	NOx and CO Portable Analyzer	3/1/2016
12	NOx and CO Portable Analyzer	5/18/2017
12	NOx and CO Portable Analyzer	4/4/2018
14	NOx and CO Portable Analyzer	4/7/2011
14	NOx and CO Portable Analyzer	2/21/2012
14	NOx and CO Portable Analyzer	2/6/2013
14	NOx and CO Portable Analyzer	3/14/2014
14	NOx and CO Portable Analyzer	3/24/2015
14	NOx and CO Portable Analyzer	3/3/2016
14	NOx and CO Portable Analyzer	5/23/2017
14	NOx and CO Portable Analyzer	3/29/2018
17	NOx and CO Portable Analyzer	2/22/2011
17	NOx and CO Portable Analyzer	2/22/2012
17	NOx and CO Portable Analyzer	1/23/2013
17	NOx and CO Portable Analyzer	2/19/2014
17	NOx and CO Portable Analyzer	2/17/2015
17	NOx and CO Portable Analyzer	2/17/2016
17	NOx and CO Portable Analyzer	4/17/2017
17	NOx and CO Portable Analyzer	3/28/2018
18	NOx and CO Portable Analyzer	2/22/2011
18	NOx and CO Portable Analyzer	2/23/2012
18	NOx and CO Portable Analyzer	1/24/2013
18	NOx and CO Portable Analyzer	2/20/2014
18	NOx and CO Portable Analyzer	2/10/2015
18	NOx and CO Portable Analyzer	2/18/2016
18	NOx and CO Portable Analyzer	4/17/2017
18	NOx and CO Portable Analyzer	4/12/2018
35	NOx and CO Portable Analyzer	2/23/2011
35	NOx and CO Portable Analyzer	2/29/2012
35	NOx and CO Portable Analyzer	2/7/2013
35	NOx and CO Portable Analyzer	2/25/2014
35	NOx and CO Portable Analyzer	3/26/2015
35	NOx and CO Portable Analyzer	3/24/2016
35	NOx and CO Portable Analyzer	5/17/2017
35	NOx and CO Portable Analyzer	4/17/2018
36	NOx and CO Portable Analyzer	3/7/2011
36	NOx and CO Portable Analyzer	3/1/2012
36	NOx and CO Portable Analyzer	2/11/2013
36	NOx and CO Portable Analyzer	2/26/2014

36	NOx and CO Portable Analyzer	3/26/2015
36	NOx and CO Portable Analyzer	3/24/2016
36	NOx and CO Portable Analyzer	5/16/2017
36	NOx and CO Portable Analyzer	3/8/2018
37	NOx and CO Portable Analyzer	2/23/2011
37	NOx and CO Portable Analyzer	3/5/2012
37	NOx and CO Portable Analyzer	2/12/2013
37	NOx and CO Portable Analyzer	2/21/2014
37	NOx and CO Portable Analyzer	3/25/2015
37	NOx and CO Portable Analyzer	3/7/2016
37	NOx and CO Portable Analyzer	5/16/2017
37	NOx and CO Portable Analyzer	4/16/2018
49	NOx and CO Portable Analyzer	2/28/2011
49	NOx and CO Portable Analyzer	3/5/2012
49	NOx and CO Portable Analyzer	3/27/2013
49	NOx and CO Portable Analyzer	3/13/2014
49	NOx and CO Portable Analyzer	3/4/2015
49	NOx and CO Portable Analyzer	2/23/2016
49	NOx and CO Portable Analyzer	4/18/2017
49	NOx and CO Portable Analyzer	7/25/2018

Required Quarterly Tests:

Unit No.	Test Description	Test Date
8	NOx and CO Portable Analyzer	2/14/2011
8	NOx and CO Portable Analyzer	5/2/2011
8	NOx and CO Portable Analyzer	7/5/2011
8	NOx and CO Portable Analyzer	10/19/2011
8	NOx and CO Portable Analyzer	2/15/2012
8	NOx and CO Portable Analyzer	4/10/2012
8	NOx and CO Portable Analyzer	7/23/2012
8	NOx and CO Portable Analyzer	10/1/2012
8	NOx and CO Portable Analyzer	1/21/2013
8	NOx and CO Portable Analyzer	4/1/2013
8	NOx and CO Portable Analyzer	9/17/2013
8	NOx and CO Portable Analyzer	12/17/2013
8	NOx and CO Portable Analyzer	2/27/2014
8	NOx and CO Portable Analyzer	6/12/2014
8	NOx and CO Portable Analyzer	9/3/2014
8	NOx and CO Portable Analyzer	12/16/2014
8	NOx and CO Portable Analyzer	2/19/2015
8	NOx and CO Portable Analyzer	6/11/2015
8	NOx and CO Portable Analyzer	9/23/2015
8	NOx and CO Portable Analyzer	12/21/2015
8	NOx and CO Portable Analyzer	3/17/2016
8	NOx and CO Portable Analyzer	6/22/2016
8	NOx and CO Portable Analyzer	9/13/2016
8	NOx and CO Portable Analyzer	3/28/2017
8	NOx and CO Portable Analyzer	6/6/2017
8	NOx and CO Portable Analyzer	9/21/2017

8	NOx and CO Portable Analyzer	12/15/2017
8	NOx and CO Portable Analyzer	2/26/2018
8	NOx and CO Portable Analyzer	6/5/2018
8	NOx and CO Portable Analyzer	8/29/2018
11	NOx and CO Portable Analyzer	2/15/2011
11	NOx and CO Portable Analyzer	4/26/2011
11	NOx and CO Portable Analyzer	7/6/2011
11	NOx and CO Portable Analyzer	10/20/2011
11	NOx and CO Portable Analyzer	1/4/2012
11	NOx and CO Portable Analyzer	4/11/2012
11	NOx and CO Portable Analyzer	7/24/2012
11	NOx and CO Portable Analyzer	10/2/2012
11	NOx and CO Portable Analyzer	1/22/2013
11	NOx and CO Portable Analyzer	4/2/2013
11	NOx and CO Portable Analyzer	9/17/2013
11	NOx and CO Portable Analyzer	12/13/2013
11	NOx and CO Portable Analyzer	2/27/2014
11	NOx and CO Portable Analyzer	5/28/2014
11	NOx and CO Portable Analyzer	8/19/2014
11	NOx and CO Portable Analyzer	12/9/2014
11	NOx and CO Portable Analyzer	2/19/2015
11	NOx and CO Portable Analyzer	6/3/2015
11	NOx and CO Portable Analyzer	9/28/2015
11	NOx and CO Portable Analyzer	11/30/2015
11	NOx and CO Portable Analyzer	2/24/2016
11	NOx and CO Portable Analyzer	6/21/2016
11	NOx and CO Portable Analyzer	9/8/2016
11	NOx and CO Portable Analyzer	2/28/2017
11	NOx and CO Portable Analyzer	6/5/2017
11	NOx and CO Portable Analyzer	9/18/2017
11	NOx and CO Portable Analyzer	12/12/2017
11	NOx and CO Portable Analyzer	2/2018
11	NOx and CO Portable Analyzer	6/6/2018
13	NOx and CO Portable Analyzer	2/17/2011
13	NOx and CO Portable Analyzer	4/5/2011
13	NOx and CO Portable Analyzer	7/7/2011
13	NOx and CO Portable Analyzer	10/11/2011
13	NOx and CO Portable Analyzer	2/17/2012
13	NOx and CO Portable Analyzer	4/12/2012
13	NOx and CO Portable Analyzer	7/25/2012
13	NOx and CO Portable Analyzer	11/1/2012
13	NOx and CO Portable Analyzer	2/5/2013
13	NOx and CO Portable Analyzer	4/10/2013
13	NOx and CO Portable Analyzer	9/20/2013
13	NOx and CO Portable Analyzer	12/13/2013
13	NOx and CO Portable Analyzer	3/12/2014
13	NOx and CO Portable Analyzer	6/12/2014
13	NOx and CO Portable Analyzer	9/3/2014

13	NOx and CO Portable Analyzer	12/26/2014
13	NOx and CO Portable Analyzer	3/24/2015
13	NOx and CO Portable Analyzer	6/2/2015
13	NOx and CO Portable Analyzer	9/28/2015
13	NOx and CO Portable Analyzer	12/2/2015
13	NOx and CO Portable Analyzer	3/2/2016
13	NOx and CO Portable Analyzer	6/21/2016
13	NOx and CO Portable Analyzer	3/28/2017
13	NOx and CO Portable Analyzer	8/22/2017
13	NOx and CO Portable Analyzer	11/13/2017
13	NOx and CO Portable Analyzer	3/7/2018
13	NOx and CO Portable Analyzer	6/14/2018
13	NOx and CO Portable Analyzer	8/29/2018
32	NOx and CO Portable Analyzer	2/25/2011
32	NOx and CO Portable Analyzer	4/12/2011
32	NOx and CO Portable Analyzer	7/8/2011
32	NOx and CO Portable Analyzer	10/13/2011
32	NOx and CO Portable Analyzer	2/24/2012
32	NOx and CO Portable Analyzer	4/17/2012
32	NOx and CO Portable Analyzer	7/26/2012
32	NOx and CO Portable Analyzer	10/4/2012
32	NOx and CO Portable Analyzer	1/28/2013
32	NOx and CO Portable Analyzer	4/3/2013
32	NOx and CO Portable Analyzer	9/25/2013
32	NOx and CO Portable Analyzer	12/16/2013
32	NOx and CO Portable Analyzer	3/12/2014
32	NOx and CO Portable Analyzer	6/11/2014
32	NOx and CO Portable Analyzer	8/28/2014
32	NOx and CO Portable Analyzer	12/18/2014
32	NOx and CO Portable Analyzer	3/4/2015
32	NOx and CO Portable Analyzer	6/3/2015
32	NOx and CO Portable Analyzer	9/23/2015
32	NOx and CO Portable Analyzer	12/7/2015
32	NOx and CO Portable Analyzer	3/16/2016
32	NOx and CO Portable Analyzer	6/13/2016
32	NOx and CO Portable Analyzer	9/13/2016
32	NOx and CO Portable Analyzer	3/6/2017
32	NOx and CO Portable Analyzer	6/13/2017
32	NOx and CO Portable Analyzer	9/18/2017
32	NOx and CO Portable Analyzer	12/12/2017
32	NOx and CO Portable Analyzer	2/8/2018
32	NOx and CO Portable Analyzer	6/2/2018
32	NOx and CO Portable Analyzer	8/15/2018
33	NOx and CO Portable Analyzer	2/25/2011
33	NOx and CO Portable Analyzer	4/20/2011
33	NOx and CO Portable Analyzer	7/11/2011
33	NOx and CO Portable Analyzer	10/14/2011
33	NOx and CO Portable Analyzer	2/27/2012

33	NOx and CO Portable Analyzer	4/18/2012
33	NOx and CO Portable Analyzer	7/27/2012
33	NOx and CO Portable Analyzer	10/5/2012
33	NOx and CO Portable Analyzer	1/29/2013
33	NOx and CO Portable Analyzer	4/4/2013
33	NOx and CO Portable Analyzer	9/25/2013
33	NOx and CO Portable Analyzer	12/16/2013
33	NOx and CO Portable Analyzer	3/19/2014
33	NOx and CO Portable Analyzer	6/11/2014
33	NOx and CO Portable Analyzer	8/28/2014
33	NOx and CO Portable Analyzer	12/22/2014
33	NOx and CO Portable Analyzer	3/2/2015
33	NOx and CO Portable Analyzer	6/3/2015
33	NOx and CO Portable Analyzer	9/23/2015
33	NOx and CO Portable Analyzer	12/7/2015
33	NOx and CO Portable Analyzer	3/2/2016
33	NOx and CO Portable Analyzer	6/13/2016
33	NOx and CO Portable Analyzer	3/13/2017
33	NOx and CO Portable Analyzer	6/13/2017
33	NOx and CO Portable Analyzer	8/14/2017
33	NOx and CO Portable Analyzer	12/11/2017
33	NOx and CO Portable Analyzer	3/27/2018
33	NOx and CO Portable Analyzer	6/11/2018
34	NOx and CO Portable Analyzer	2/26/2011
34	NOx and CO Portable Analyzer	4/20/2011
34	NOx and CO Portable Analyzer	7/12/2011
34	NOx and CO Portable Analyzer	10/18/2011
34	NOx and CO Portable Analyzer	2/28/2012
34	NOx and CO Portable Analyzer	4/19/2012
34	NOx and CO Portable Analyzer	7/30/2012
34	NOx and CO Portable Analyzer	10/8/2012
34	NOx and CO Portable Analyzer	1/30/2013
34	NOx and CO Portable Analyzer	4/8/2013
34	NOx and CO Portable Analyzer	9/25/2013
34	NOx and CO Portable Analyzer	12/12/2013
34	NOx and CO Portable Analyzer	3/13/2014
34	NOx and CO Portable Analyzer	6/11/2014
34	NOx and CO Portable Analyzer	8/28/2014
34	NOx and CO Portable Analyzer	11/19/2014
34	NOx and CO Portable Analyzer	3/3/2015
34	NOx and CO Portable Analyzer	6/2/2015
34	NOx and CO Portable Analyzer	9/28/2015
34	NOx and CO Portable Analyzer	12/8/2015
34	NOx and CO Portable Analyzer	3/14/2016
34	NOx and CO Portable Analyzer	6/21/2016
34	NOx and CO Portable Analyzer	3/6/2017
34	NOx and CO Portable Analyzer	6/20/2017
34	NOx and CO Portable Analyzer	9/12/2017

34	NOx and CO Portable Analyzer	12/18/2017
34	NOx and CO Portable Analyzer	6/12/2018
50	NOx and CO Portable Analyzer	3/1/2011
50	NOx and CO Portable Analyzer	4/4/2011
50	NOx and CO Portable Analyzer	7/13/2011
50	NOx and CO Portable Analyzer	10/12/2011
50	NOx and CO Portable Analyzer	3/7/2012
50	NOx and CO Portable Analyzer	4/24/2012
50	NOx and CO Portable Analyzer	8/1/2012
50	NOx and CO Portable Analyzer	10/9/2012
50	NOx and CO Portable Analyzer	1/31/2013
50	NOx and CO Portable Analyzer	4/9/2013
50	NOx and CO Portable Analyzer	9/19/2013
50	NOx and CO Portable Analyzer	12/11/2013
50	NOx and CO Portable Analyzer	2/20/2014
50	NOx and CO Portable Analyzer	5/28/2014
50	NOx and CO Portable Analyzer	8/19/2014
50	NOx and CO Portable Analyzer	12/9/2014
50	NOx and CO Portable Analyzer	3/11/2015
50	NOx and CO Portable Analyzer	5/21/2015
50	NOx and CO Portable Analyzer	9/29/2015
50	NOx and CO Portable Analyzer	12/2/2015
50	NOx and CO Portable Analyzer	3/23/2016
50	NOx and CO Portable Analyzer	5/31/2016
50	NOx and CO Portable Analyzer	9/8/2016
50	NOx and CO Portable Analyzer	2/28/2017
50	NOx and CO Portable Analyzer	6/5/2017
50	NOx and CO Portable Analyzer	9/14/2017
50	NOx and CO Portable Analyzer	11/7/2017
50	NOx and CO Portable Analyzer	2/21/2018
50	NOx and CO Portable Analyzer	6/7/2018
50	NOx and CO Portable Analyzer	8/22/2018

Section 19

Requirements for Title V Program

Who Must Use this Attachment:

* Any major source as defined in 20.2.70 NMAC.
* Any source, including an area source, subject to a standard or other requirement promulgated under Section 111 - Standards of Performance for New Stationary Sources, or Section 112 Hazardous Air Pollutants, of the 1990 federal Clean Air Act ("federal Act"). Non-major sources subject to Sections 111 or 112 of the federal Act are exempt from the obligation to obtain an 20.2.70 NMAC operating permit until such time that the EPA Administrator completes rulemakings that require such sources to obtain operating permits. In addition, sources that would be required to obtain an operating permit solely because they are subject to regulations or requirements under Section 112(r) of the federal Act are exempt from the requirement to obtain an Operating Permit.
* Any Acid Rain source as defined under title IV of the federal Act. The Acid Rain program has additional forms. See http://www.env.nm.gov/aqb/index.html. Sources that are subject to both the Title V and Acid Rain regulations are encouraged to submit both applications simultaneously.
* Any source in a source category designated by the EPA Administrator ("Administrator"), in whole or in part, by regulation, after notice and comment.

19.1 - 40 CFR 64, Compliance Assurance Monitoring (CAM) (20.2.70.300.D.10.e NMAC)

Any source subject to 40CFR, Part 64 (Compliance Assurance Monitoring) must submit all the information required by section 64.7 with the operating permit application. The applicant must prepare a separate section of the application package for this purpose; if the information is already listed elsewhere in the application package, make reference to that location. Facilities not subject to Part 64 are invited to submit periodic monitoring protocols with the application to help the AQB to comply with 20.2.70 NMAC. Sources subject to 40 CFR Part 64, must submit a statement indicating your source's compliance status with any enhanced monitoring and compliance certification requirements of the federal Act.

Does not apply. In general terms, an affected unit must be subject to an emission limit for a pollutant; use a control device to achieve compliance with that limit; and have a pre-control potential to emit for that pollutant greater than major-source level.

19.2 - Compliance Status (20.2.70.300.D.10.a & 10.b NMAC)

Describe the facility's compliance status with each applicable requirement at the time this permit application is submitted. This statement should include descriptions of or references to all methods used for determining compliance. This statement should include descriptions of monitoring, recordkeeping and reporting requirements and test methods used to determine compliance with all applicable requirements. Refer to Section 2, Tables 2-N and 2-O of the Application Form as necessary. (20.2.70.300.D.11 NMAC) For facilities with existing Title V permits, refer to most recent Compliance Certification for existing requirements. Address new requirements such as CAM, here, including steps being taken to achieve compliance.

Enterprise is in compliance and will continue to be in compliance with the requirements of the Title V permit.

19.3 - Continued Compliance (20.2.70.300.D.10.c NMAC)

Provide a statement that your facility will continue to be in compliance with requirements for which it is in compliance at the time of permit application. This statement must also include a commitment to comply with other

applicable requirements as they come into effect during the permit term. This compliance must occur in a timely manner or be consistent with such schedule expressly required by the applicable requirement.

Enterprise is in compliance and will continue to be in compliance with the requirements of the Title V permit. Furthermore, Enterprise has made a commitment to the personnel and resources to comply with other applicable requirements as they come into effect during the permit term. This compliance will occur in a timely manner and/or be consistent with such schedule expressly required by the applicable requirement.

19.4 - Schedule for Submission of Compliance (20.2.70.300.D.10.d NMAC)

You must provide a proposed schedule for submission to the department of compliance certifications during the permit term. This certification must be submitted annually unless the applicable requirement or the department specifies a more frequent period. A sample form for these certifications will be attached to the permit.

Enterprise will submit the ACC to NMED by September 30 of each year, which is 30 days from the end of the 12-month reporting period (August 31). Enterprise will submit semiannual reports (SAR) by April 14 and October 15 of each year, which is 45 days from the end of the reporting period (February 28 and August 31).

19.5 - Stratospheric Ozone and Climate Protection

In addition to completing the four (4) questions below, you must submit a statement indicating your source's compliance status with requirements of Title VI, Section 608 (National Recycling and Emissions Reduction Program) and Section 609 (Servicing of Motor Vehicle Air Conditioners).

---

1. Does your facility have any air conditioners or refrigeration equipment that uses CFCs, HCFCs or other ozone-depleting substances? ☑ **Yes** ☐ **No**

2. Does any air conditioner(s) or any piece(s) of refrigeration equipment contain a refrigeration charge greater than 50 lbs? ☐ **Yes** ☑ **No**

   (If the answer is yes, describe the type of equipment and how many units are at the facility.)

3. Do your facility personnel maintain, service, repair, or dispose of any motor vehicle air conditioners (MVACs) or appliances ("appliance" and "MVAC" as defined at 82. 152)? ☐ **Yes** ☑ **No**

4. Cite and describe which Title VI requirements are applicable to your facility (i.e. 40 CFR Part 82, Subpart A through G.)

The Chaco Gas Plant does not produce, manufacture, transform, destroy, import, or export any stratospheric ozone-depleting substances (CFCs, HCFCs); does not maintain or service motor vehicle air conditioning units or refrigeration equipment; and does not sell, distribute, or offer for sale any product that may contain stratospheric ozone-depleting substances. Enterprise shall continue to maintain compliance with the conditions stipulated in 40 CFR 82, Subparts A-G of the Stratospheric Ozone Protection Program (Title VI of the Clean Air Act Amendments).

19.6 - Compliance Plan and Schedule

Applications for sources, which are not in compliance with all applicable requirements at the time the permit application is submitted to the department, must include a proposed compliance plan as part of the permit application package. This plan shall include the information requested below:

A. **Description of Compliance Status:** (20.2.70.300.D.11.a NMAC)
A narrative description of your facility's compliance status with respect to all applicable requirements (as defined in 20.2.70 NMAC) at the time this permit application is submitted to the department.

B. **Compliance plan:** (20.2.70.300.D.11.B NMAC)
A narrative description of the means by which your facility will achieve compliance with applicable requirements with which it is not in compliance at the time you submit your permit application package.

C. **Compliance schedule:** (20.2.70.300D.11.c NMAC)
A schedule of remedial measures that you plan to take, including an enforceable sequence of actions with milestones, which will lead to compliance with all applicable requirements for your source. This schedule of compliance must be at least as stringent as that contained in any consent decree or administrative order to which your source is subject. The obligations of any consent decree or administrative order are not in any way diminished by the schedule of compliance.

D. **Schedule of Certified Progress Reports:** (20.2.70.300.D.11.d NMAC)
A proposed schedule for submission to the department of certified progress reports must also be included in the compliance schedule. The proposed schedule must call for these reports to be submitted at least every six (6) months.

E. **Acid Rain Sources:** (20.2.70.300.D.11.e NMAC)
If your source is an acid rain source as defined by EPA, the following applies to you. For the portion of your acid rain source subject to the acid rain provisions of title IV of the federal Act, the compliance plan must also include any additional requirements under the acid rain provisions of title IV of the federal Act. Some requirements of title IV regarding the schedule and methods the source will use to achieve compliance with the acid rain emissions limitations may supersede the requirements of title V and 20.2.70 NMAC. You will need to consult with the Air Quality Bureau permitting staff concerning how to properly meet this requirement.

NOTE: The Acid Rain program has additional forms. See http://www.env.nm.gov/aqb/index.html. Sources that are subject to both the Title V and Acid Rain regulations are **encouraged** to submit both applications **simultaneously**.

Enterprise believes that the Chaco Gas Plant is in compliance with applicable regulations at the time this application is submitted, thus there is no need for a compliance plan at this time.

19.7 - 112(r) Risk Management Plan (RMP)

Any major sources subject to section 112(r) of the Clean Air Act must list all substances that cause the source to be subject to section 112(r) in the application. The permittee must state when the RMP was submitted to and approved by EPA.

Natural Gas Liquid and refrigerant propane are substances maintained at the facility which are subject to section 112(r). The current RMP for the Chaco Natural Gas Processing Plant is dated February 17, 2016.

19.8 - Distance to Other States, Bernalillo, Indian Tribes and Pueblos

Will the property on which the facility is proposed to be constructed or operated be closer than 80 km (50 miles) from other states, local pollution control programs, and Indian tribes and pueblos (20.2.70.402.A.2 and 20.2.70.7.B NMAC)?

(If the answer is yes, state which apply and provide the distances.)

Yes. Colorado (56 km), Southern Ute Indian Reservation (56 km), Jicarilla Apache Indian Reservation (80 kilometers), Navajo Nation (14 km).

19.9 - Responsible Official

Responsible Official: Graham W. Bacon - Executive Vice President

Section 20

Other Relevant Information

Other relevant information. Use this attachment to clarify any part in the application that you think needs explaining. Reference the section, table, column, and/or field. Include any additional text, tables, calculations or clarifying information.

Additionally, the applicant may propose specific permit language for AQB consideration. In the case of a revision to an existing permit, the applicant should provide the old language and the new language in track changes format to highlight the proposed changes. If proposing language for a new facility or language for a new unit, submit the proposed operating condition(s), along with the associated monitoring, recordkeeping, and reporting conditions. In either case, please limit the proposed language to the affected portion of the permit.

No other relevant information is being submitted with this application.

Section 22: Certification

Company Name: Enterprise Field Services, LLC

I, Ivan W. Zirbes, hereby certify that the information and data submitted in this application are true and as accurate as possible, to the best of my knowledge and professional expertise and experience.

Signed this 11th day of March, 2019, upon my oath or affirmation, before a notary of the State of

Texas.

*Signature

3/11/19
Date

Ivan W. Zirbes
Printed Name

Vice President
Title

Scribed and sworn before me on this 11th day of March, 2019.

My authorization as a notary of the State of Texas expires on the

23rd day of February, 2022.

Brenda J. Mendez
Notary's Signature

3/11/19
Date

Brenda J. Mendez
Notary's Printed Name

BRENDA J. MENDEZ
Notary Public, State of Texas
Comm. Expires 02-23-2022
Notary ID 10264322

*For Title V applications, the signature must be of the Responsible Official as defined in 20.2.70.7.AE NMAC.