Final Draft

Discussion Paper for a Petroleum Refining Greenhouse Gas Accounting and Reporting Protocol

Prepared for:

California Climate Action Registry

Prepared by:

URS Corporation

July 9, 2007

Table of Contents

1.0 Introduction 1-1
2.0 Petroleum Refining Industry Overview 2-1
1.1 Petroleum Refining Operations 2-1
1.1.1 Separation Operations 2-1
1.1.2 Downstream Processing Emissions 2-3
1.1.3 Supporting Operations 2-5
1.2 Petroleum Refining Product Characterization 2-7
1.3 Petroleum Refining Fuel Sources 2-8
1.4 Petroleum Refining Data Systems 2-9
3.0 California Petroleum Refining Industry Characterization 3-1
3.1 California Petroleum Refineries 3-1
3.1.1 California Refinery Unique Characteristics 3-7
3.1.2 California Refinery Emissions Characteristics 3-8
3.2 California Petroleum Refinery Reporting Requirements 3-9
4.0 Petroleum Refinery GHG Emissions Source Characterization 4-1
4.1 Direct GHG Emissions Sources 4-1
4.1.1 Combustion Emissions 4-1
4.1.2 Vented emissions 4-2
4.1.3 Fugitive emissions 4-4
4.2 Indirect Energy GHG Emissions Sources 4-5
4.2.1 Other Indirect GHG Emissions Sources 4-5
4.3 Source Contributions to Facility-wide Refinery Emissions 4-6
5.0 Boundary Considerations for GHG Reporting 5-1
5.1 Installation Definition Precedents 5-1
5.2 Organizational Boundary Options 5-3
5.2.1 Management Control Reporting 5-5
5.2.2 Equity Share Reporting 5-6
5.2.3 Petroleum Refining Sector Considerations 5-6
5.3 Geographical Boundary Options 5-7
5.4 Operational Boundary Considerations 5-9
6.0 GHG Emissions Methodologies Overview 6-1
6.1 Methodology Accuracy Characterization 6-1
6.2 General Emissions Methodology Approaches 6-2
6.3 Methodology Review 6-3
7.0 Emissions Calculation Methods 7-1
7.1 Direct Emissions: Combustion Sources 7-1
7.1.1 General Combustion Source Method Considerations 7-1
7.1.2 Stationary Combustion Estimation Methods 7-3
7.1.3 Allocating Emissions from Combined Heat and Power 7-14
7.1.4 Flaring Estimation Methods 7-17
7.1.5 Mobile Source Estimation Methods 7-21
7.1.6 Combustion Source Method Evaluation 7-25
7.2 Vented Emissions 7-32

7.2.1 Process Emission Methods 7-32
7.2.2 Other Vented Emission Methods 7-45
7.2.3 Vented Source Method Evaluation 7-46
7.3 Fugitive Emissions 7-52
7.3.1 Equipment Component Fugitive Emissions 7-52
7.3.2 Cooling towers 7-57
7.3.3 Anaerobic wastewater treatment 7-57
7.3.4 Fugitive Source Method Evaluation 7-58
7.4 Indirect Emission Methods 7-61
7.4.1 Indirect Energy Import Emission Methods 7-61
7.4.2 Cooling Towers 7-63
7.4.3 Other Indirect Emission Methods 7-63
7.4.4 Indirect Source Method Evaluation 7-67
8.0 GHG Emissions Reporting Considerations 8-1
8.1 CO_2-equivalent emissions 8-1
8.2 De Minimis and Materiality considerations 8-1
8.3 Industry specific efficiency metrics 8-2
8.4 Other Optional Reporting 8-3
9.0 Certification/Verification 9-1
9.1 Documents and Information to Review 9-1
9.2 Questions to Consider in Verifying Emissions Estimates 9-3
10.0 Quality Assurance 10-1
11.0 Acronyms 11-1
12.0 References 12-1

1.0 Introduction

The California Climate Action Registry (the Registry) is a voluntary greenhouse gas (GHG) emissions reporting program that was established in 2000 to support companies in establishing a GHG emissions baseline inventory. The Registry has developed a general GHG emissions reporting protocol guidance document, and several industry-specific protocols that present methodologies and issues unique to the industry. One of the industry sectors of significant importance in California is the petroleum refining industry, accounting for around 6 percent of the estimated GHG emissions in California in 2004. The Registry has engaged URS Corporation to support the development of a GHG protocol specific to the petroleum refining industry to address the need for sector-specific methodologies, boundaries, and other protocol elements.

In September 2006, Assembly Bill 32 (AB32), the Global Warming Solutions Act of 2006, was passed in California. AB32 requires the California Air Resources Board (CARB) to establish and administer a GHG reporting and verification program. Along with interested stakeholders, the Registry will work with CARB to develop the GHG reporting protocols that will be adopted for mandatory reporting. This document serves as a discussion paper for the purpose of informing the development of a petroleum industry refinery protocol for annual reporting. It provides the underlying options, advantages, disadvantages and issues for the following elements associated with an industry-specific GHG emissions reporting protocol:

- Reporting boundaries
- GHG emissions sources
- GHG estimation methodologies
- Quality assurance
- Reporting, monitoring and verification

Section 2 of the document provides general background information on petroleum refining processes, products, and data systems. Section 3 discusses the refineries located in California and unique characteristics as compared to most refineries outside California. In Section 4, the GHG direct and indirect emission sources in a petroleum refinery are identified and characterized. Section 5 describes the options for organizational and operational boundary considerations. Section 6 presents an overview of GHG estimation methodologies for petroleum refining sources, along with a general discussion of accuracy. Section 7 provides detailed information on the methodology options by emission source, grouped by combustion, vented, and fugitive source types. Sections 8 -

10 provide information and options for policy considerations related to boundaries, reporting, monitoring, and verification.

2.0 Petroleum Refining Industry Overview

Petroleum refineries in the U.S. represent a broad range of products and corresponding complexity of operations. This section provides a general overview of the petroleum refining industry to serve as a basis for understanding the major process operations in a refinery, the important support operations, as well as the data management systems commonly employed.

1.1 Petroleum Refining Operations

Refineries vary in complexity based on the characteristics of the crude oil processed and the desired product mix. Figure 2-1 presents a simplified process schematic diagram of the major process operations in a typical petroleum refinery.

Petroleum refining process operations can be classified as:

- Separation of crude oil into hydrocarbon fractions via distillation;
- Downstream processing of distillation fractions into higher value intermediate components and end use products; and
- Supporting utility and process systems.

Separation and downstream process operations in a California refinery are closed systems where any vent streams are recovered or vented to a flare or incinerator to control volatile organic compound (VOC) emissions. Processes to separate or process crude oil are very energy intensive, and most unit operations have a dedicated process heater or reboiler. Process heaters/reboilers are either direct fired, typically using refinery fuel gas, or indirectly heated using steam or waste heat.

1.1.1 Separation Operations

Crude distillation operations separate the crude oil into various boiling point hydrocarbon fractions. The crude oil is heated and fed to the **atmospheric distillation** unit, a vertical distillation column operated at atmospheric pressure, to initially separate the hydrocarbon fractions. The fractions range from the light ends recovered at the top of the distillation tower [butane and lighter compounds commonly referred to as liquefied petroleum gas (LPG)], to the residuum at the bottom. The bottom residue is often sent to a **vacuum distillation** unit that separates the heavier petroleum fractions at low pressure to increase volatilization and separation.

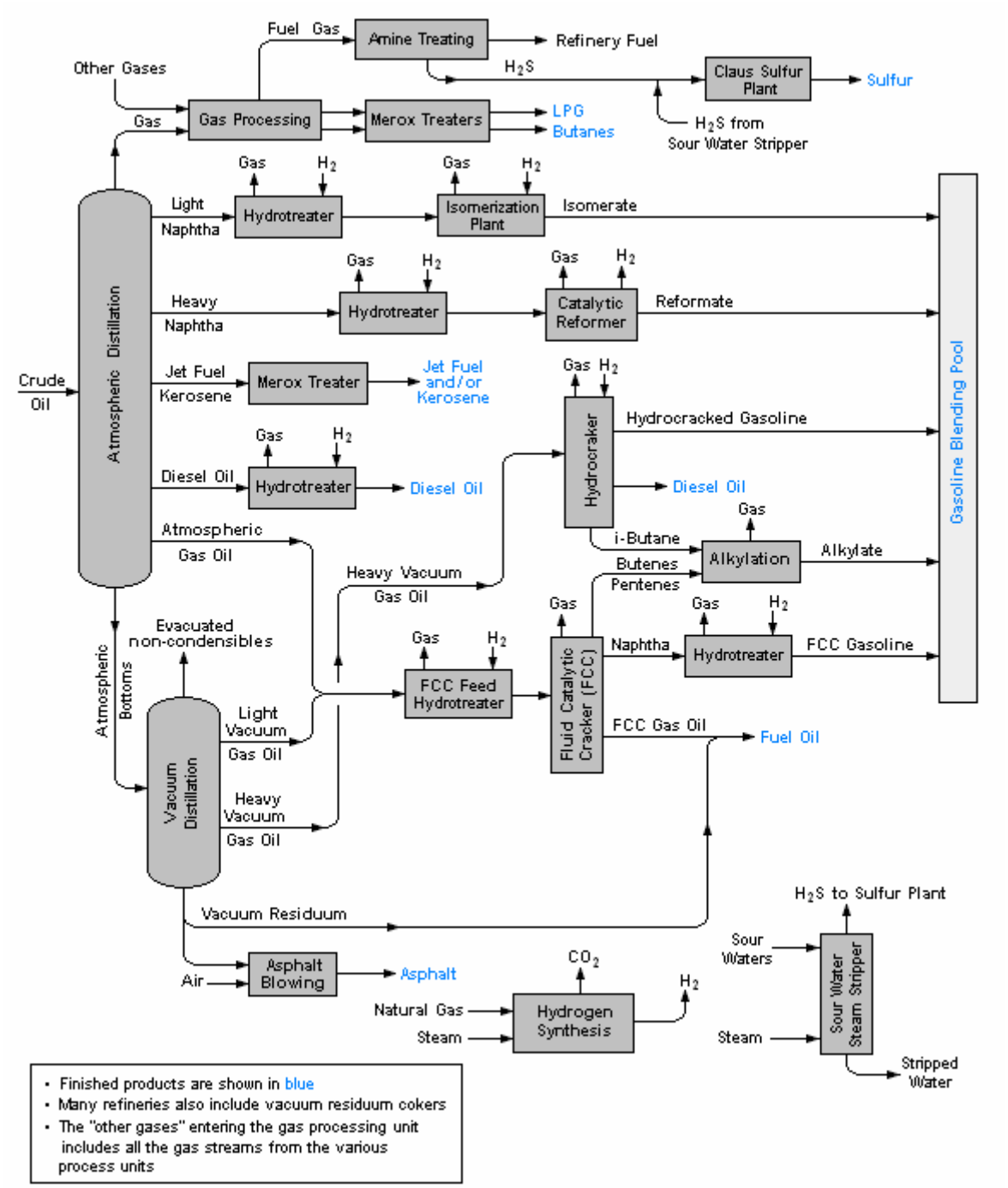

Figure 2-1. Simplified Schematic Diagram of a Typical Petroleum Refinery
(Source: http://en.wikipedia.org/wiki/Petroleum_refining)

1.1.2 Downstream Processing Emissions

Thermal cracking, or visbreaking, uses heat and pressure to break heavy hydrocarbon molecules into smaller, lighter molecules. A fractionator separates the various fractions of fuel gas, gasoline, naphtha, and gas oil. Thermal cracking has largely been replaced by catalytic cracking.

Hydrotreating is a process to remove impurities (e.g., sulfur, trace metals) prior to catalytic processing. Hydrotreating utilizes catalyst in the presence of hydrogen under high temperature and pressure to upgrade the quality of fractions by converting olefins and diolefins to paraffins to reduce gum formation in fuels. **Hydroprocessing**, similar to hydrotreating, cracks heavier molecules, typically residuals from the crude distillation units, into lighter, higher value products.

Catalytic reforming is a reaction process to convert low octane gasolines and naphthas into high octane aromatic hydrocarbons. There are four major types of reactions which occur during reforming processes: 1. dehydrogenation of naphthenes to aromatics: 2. dehydrocyclization of paraffins to aromatics; 3. isomerization; and 4. hydrocracking. Hydrogen is released in the first 3 reactions, which can be used in hydrotreating or hydrocracking processes.

Isomerization converts compounds like paraffins (butane, pentane) to isoparaffins with higher octane rating. Isomerization reactions take place at elevated temperatures in the presence of a catalyst.

Catalytic hydrocracking typically utilizes a fixed-bed catalytic cracking reactor under high pressure in the presence of hydrogen. Feedstocks are middle distillates, cycle oils, residual fuel oils, and reduced crudes that cannot be effectively cracked in catalytic cracking units (CCUs).

Fluidized catalytic cracking units (FCCUs) convert heavy hydrocarbons into lighter molecules using heat, pressure, and catalyst. The catalytic cracking process uses a catalyst to aid in the cracking of heavier fractions of crude oils or residues into lighter products such as gasoline or LPG. During the catalytic cracking process, coke deposits on the catalyst as a byproduct of the cracking process and must be regenerated by oxidizing the coke at high temperatures.

The **FCCU catalyst regeneration** process restores the catalyst activity by continuously oxidizing the coke from spent catalyst in the regenerator. The process vent from the

catalyst regeneration process is a significant source of CO_2 emissions. FCCU catalyst regeneration processes are operated in two basic modes:

1. Full, or complete, CO burn mode, where essentially all CO is oxidized to CO_2 within the regenerator. The exhaust gas typically contains approximately 2% O_2 and less than 1% CO. The hot exhaust gases typically pass through a waste heat boiler, operated with or without supplemental fuel, to produce steam prior to exiting through the stack.
2. Partial burn mode, where the regenerator exhaust gas contains less than 1% O_2 and 6-8% CO. The exhaust gases pass through a CO boiler, which completes the oxidation of CO to CO_2 external to the FCCU regenerator prior to exiting the stack.

In some cases, the regenerator off-gas may be controlled with a CO boiler (to reduce CO and TOC emissions) if operated in a full burn mode, and/or with an electrostatic precipitator or scrubber (to control particulate emissions).

Alkylation converts isobutane formed during catalytic cracking or other processes to high octane gasoline. Alkylation joins an olefin and an isoparaffin compound in a reactor with either sulfuric acid or hydrofluoric acid.

Coking is an upgrading process used primarily to convert low-value residual fuel oils to transportation fuels, such as gasoline and diesel. The by-product formed is petroleum coke. **Delayed coking** is a process where residual oils are fractionated to remove light ends, and the heavy ends heated in a furnace and then fed to a vessel called a coke drum, where coke is formed. A delayed coker does not gasify the purge coke, which is collected and sold as a fuel.

A **flexicoker** is a type of fluid coker that gasifies the coke from the normal fluid coking process. This purge coke is gasified into a low-Btu fuel gas, which is used elsewhere in the refinery, and the residual coke is harder with a higher concentration of metals. Flexicoker operations at refineries result in large quantities of carbon monoxide (CO). The CO is usually ducted to a nearby boiler and used as low-Btu fuel gas. The boiler completes the oxidation of CO to CO_2 and may include additional gaseous fuels (such as natural gas or refinery fuel gas) to produce adequate steam and power for the facility demands.

Chemical treatment removes or converts impurities, such as sulfur, in petroleum products. Extraction is used to remove sulfur from light petroleum fractions. Merox is a common extraction process to remove mercaptans. Oxidation or sweetening is used for

gasoline or distillate fractions using solid catalyst and alkaline caustic also in a Merox process.

1.1.3 Supporting Operations

There are many supporting operations in a petroleum refinery that are important from a GHG emissions standpoint. The most significant supporting operations include:

- Hydrogen production;
- Sulfur recovery;
- Steam/heat and electricity production;
- Waste waster treatment;
- Cooling towers;
- Crude storage tanks; and
- Product loading.

Many refineries have a dedicated **hydrogen production** plant. Hydrogen is commonly produced from natural gas and/or refinery fuel gas. Steam reforming is a catalytic process that involves a reaction between natural gas or other light hydrocarbons and steam. The result is a mixture of hydrogen, carbon monoxide, carbon dioxide and water that is produced in a series of three reactions. The first reforming step catalytically reacts methane with steam to form hydrogen and carbon monoxide in an endothermic reaction. The carbon monoxide is then "shifted" with steam to form additional hydrogen and carbon dioxide in an exothermic reaction. The carbon dioxide is removed using one of several adsorption processes. The methanation step is used to remove all remaining carbon monoxide by exothermically reacting CO with hydrogen to form methane and water. Finally, hydrogen is separated in preparation for its final use. Hydrogen production from steam methane reforming results in a highly concentrated CO_2 process vent stream.

Sulfur recovery is typically a two (or more) step process to remove sulfur compounds from the gas stream, followed by recovery as elemental sulfur. The sulfur removal process that is most common in refineries uses chemical absorption of an amine solution in a countercurrent separation process to selectively remove hydrogen sulfide (H_2S) from the gas stream generated in a refinery. Sulfur recovery amine solvent absorption also removes any residual CO_2 contained in the gas stream. However, most refining operations do not have a significant fraction of CO_2.

During the regeneration of the amine solvent, the H_2S and CO_2 are separated from the amine solution, and the high concentration sulfur compound stream is sent to a sulfur recovery operation, to reduce the H_2S to elemental sulfur for resale. Typically, methods for removing sulfur from the hydrogen sulfide gas streams are a combination of two processes. A Claus process is commonly used for primary sulfur recovery. The Claus process consists of partial combustion of the H_2S -rich gas stream and then reacts the resulting sulfur dioxide (SO_2) and unburned H_2S in the presence of a catalyst to produce elemental sulfur. Typical Claus units have residual tail gas sulfur amounting to 0.8 to 1.5%, as compared to regulatory limits of 0.025% in the vent stream. As such, the tail gas stream from the Claus process is often sent to a secondary sulfur recovery unit, such as the Shell Claus Offgas Treating (SCOT), Stretford, or other process. In some cases, the tail gas is sent to an amine scrubber to remove the residual sulfur which may be recycled back to the Claus process. The tailgas is ultimately sent to a sour gas incinerator or flare to oxidize any remaining H_2S or other sulfur compounds. Any CO_2 that is removed from the gas stream in the upstream amine separation process is also carried over in the tailgas to the sour gas incinerator or flare.

Steam/heat is used extensively throughout a refinery for process heat transfer. Steam boilers often fire refinery fuel gas, natural gas, or refinery fuel oil to generate steam. Many refineries also have replaced less efficient steam boilers with cogeneration units that produce both electricity and steam. The cogeneration units typically fire natural gas and/or refinery fuel gas, and often export excess electricity generated to the grid.

Waste water treatment operations use biological systems to control hydrocarbon concentration in water effluent from the refining processes. Anaerobic waste water treatment generates small quantities of methane from the biological treatment process. Aerobic waste water treatment results in CO_2 emissions from biological treatment.

Storage tanks emit volatile hydrocarbon emissions during the loading of liquids and due to ambient temperature variations. During liquid loading into the tank, gas containing volatile hydrocarbons in the head space of the tank is displaced, resulting in emissions termed working losses. Most storage tanks in refineries are controlled by a floating roof tank structure to minimize losses or are equipped with a vapor recovery system. Storage tanks also vent gas in the head space due to thermal expansion of the liquid which occurs due to diurnal temperature variations, resulting in emissions termed breathing or standing losses. Refinery product storage tanks have negligible concentrations of methane in the vapor space, because the most volatile compounds have been removed or converted in upstream operations. Crude oil typically has a very low concentration of saturated methane in the crude. Depending on the temperature and partial pressure of methane in

the crude oil, small amounts of methane may be volatilized during **crude oil storage and tank loading**.

1.2 Petroleum Refining Product Characterization

A number of products may be manufactured in a refinery, depending on the crude oil characteristics and product marketplace. Fuel products are the predominant product category, with transportation fuels dominating the market. Transportation is the greatest single use of petroleum, accounting for over 67 percent of all U.S. petroleum consumed in 2005, as shown in Figure 2-1. The industrial sector is the second largest petroleum consuming sector and accounts for about 24 percent of all petroleum consumption in the U.S. Residential/Commercial and the electric utility sectors account for the remaining 9 percent of petroleum consumption. (Energy Information Administration, 2006)

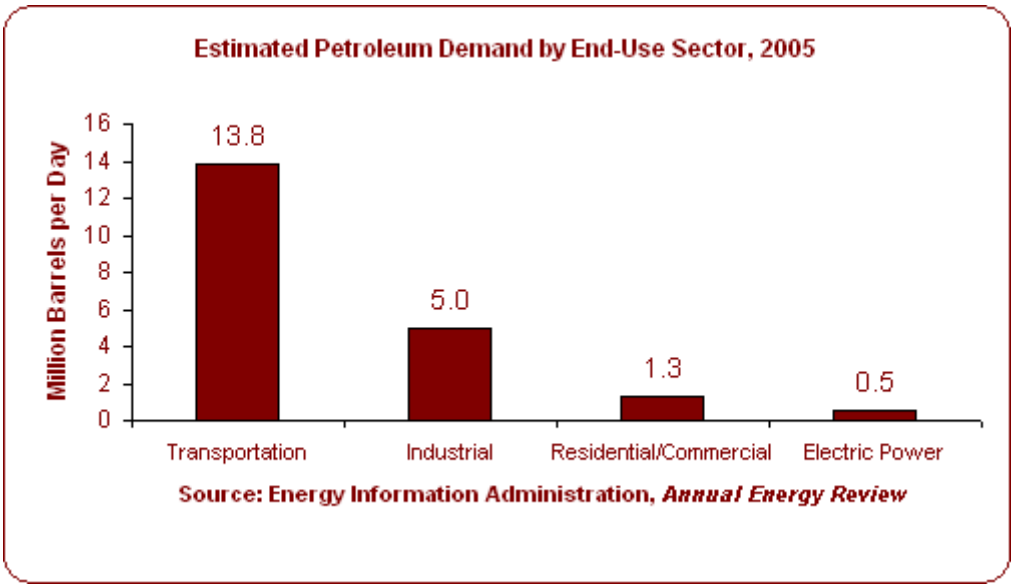

Figure 2-1. Estimated Petroleum Demand in the U.S.

Gasoline, diesel fuel, and jet fuel are the largest volumes of refinery products produced in the US. Other non-transportation fuels include liquefied petroleum gas (LPG), distillate oil, kerosene, residual oil, and coke.

Reformulated gasoline is produced in California to reduce the CO emissions from tailpipe emissions. Reformulated gasoline per the California regulations is a blend with

oxygenate ethanol, and low limits of sulfur, benzene, and total aromatic hydrocarbons. Reformulated diesel has ultra low levels of sulfur at 15 ppm.

Gaseous fuels, such as propane, are stored and shipped in liquid form under pressure in specialized railcars to distributors. Liquid fuels are shipped by rail, marine tanker, or regionally in pipelines.

Finished non-fuel products include solvents, lubricating oils, greases, petroleum wax, petroleum jelly, asphalt, and coke. Lubricants, waxes, and other non-fuel products are usually shipped in bulk to an offsite packaging plant. By-products from crude oil include sulfur and sulfuric acid, tar, and asphalt.

Feedstocks for petrochemical and other manufacturing processes include naphtha, ethane, propane, butane, ethylene, propylene, butylenes, butadiene, benzene, toluene, and xylene. Frequently a petrochemical plant will be sited adjacent to a refinery, utilizing these intermediate products for the production of specialized materials such as plastics or agrichemicals.

Refinery fuel gas is also used as a feed for hydrogen production. Hydrogen production operations may or may not be owned and operated by the refinery, as discussed in Section 5.

1.3 Petroleum Refining Fuel Sources

Fuel sources for refining operations are generally derived from the crude oil processed. These fuels may include refinery fuel gas (also referred to as still gas), refinery fuel oil, distillate oil, and residual oil. Natural gas is also imported into the refinery as a fuel and/or for hydrogen production feedstock in many refineries.

Refinery fuel gas is collected from the light ends of crude oil distillation and other downstream processes, as well as excess hydrogen produced. Refinery fuel gas composition is dependant on the characteristics of the crude oil and the product mix in the refinery. Typically, refinery fuel gas source streams are collected in a fuel gas mixing drum, and distributed throughout the refinery in a supply system for direct-fired combustion sources or hydrogen production. Therefore, in most cases, the composition of the refinery fuel gas is consistent or homogeneous throughout the refinery at a given time. In some refineries, however, there may be more than one collection system with

differing compositions. In any configuration, the composition of refinery fuel gas can vary considerably over time as crude sources and product mixes change.

1.4 Petroleum Refining Data Systems

Due to the complexity of petroleum refining operations, there is a need for reliable electronic process control and database systems to manage the extensive data required for operations. Some common systems that are employed at most refineries include:

- Laboratory information management system;
- Distributed control system; and
- Process historian database.

The laboratory information management system (LIMS) is a database system for managing laboratory analytical data collected to support the operational integrity of petroleum refining operations. In a typical refinery, laboratory personnel manually input the sample analytical results into the LIMS database system. This system is relevant for GHG emissions accounting for methodologies that rely on stream compositional data.

Most refineries have a process data system, or process historian, that is electronically interfaced to a distributed control system (DCS). Process data, such as fuel consumption and coke burn rate, are archived in the process historian database system. The primary function of the process historian is to support the optimal operation of the refinery processes, with oversight of critical process parameters by process engineers responsible for safe and efficient operation of the plant.

Refinery inputs, outputs, and internal consumption are closely monitored by an on-site accounting department to ensure that the overall mass and energy balance across the refinery is closed. This provides a quality assurance check of the metered streams to identify any discrepancies or metering errors. Minor adjustments may be made to fuel or flare consumption values to “reconcile” or close the balance. This reconciled data is usually considered the official data that is used for financial accounting of the refinery inputs, outputs, and utilization. The data reported to the Department of Energy’s EIA and to the California Energy Commission (CEC) are based on reconciled accounting data. The data reported to the local air quality management districts are that obtained by the environmental department within the refinery, in many cases relying on the same basic data tailored for specific rule reporting requirements.

3.0 California Petroleum Refining Industry Characterization

In California, petroleum refineries are unique to the product specifications for transportation fuels and/or stringent state and local environmental regulations. Section 3.1 presents an overview of the refineries in California, their products and processes, and differences from other U.S. refineries relative to GHG emissions. In Section 3.2, current refinery air quality reporting requirements are identified to provide a basis for understanding existing and proposed data collection and reporting efforts.

3.1 California Petroleum Refineries

In California, 21 refineries are located in the San Francisco Bay Area, Los Angeles area, and the Central Valley. Table 3-1 presents the operating refineries in California, their respective capacities, and major products. The largest refineries in each of the three regions, and all 5 in the Bay Area, produce reformulated gasoline and diesel. The location of each refinery is shown in Figure 3-1.

Table 3-2 identifies some of the major process units within California refineries. Gasoline is produced in 14 of the California refineries and represents about half of the total product volume of all refinery outputs. The gasoline producing refineries are complex, with many of the process units described in Section 2.1 required to produce reformulated gasoline that meets the California Air Resources Board (CARB) specifications which went into effect in 1996. The requirement for adding the oxygenate, methyl tertiary butyl-ether (MTBE), was removed in 2003 and replaced by alkylates or ethanol.

Terminal facilities that supply crude oil to California's refineries are mostly marine terminals in northern and southern California. Sixty percent of the crude oil processed in California's refineries is sourced outside California, from Alaska (around 20%) and foreign countries (around 40%). Around 40 percent of the crude is produced in Bakersfield and transported via pipeline to the Southern California refineries. The Bakersfield crude oil is "heavy" crude, characterized by a relatively high percentage of heavy end hydrocarbons and high viscosity.

Figure 1. California Refineries
Source: http://www.energy.ca.gov/maps/refinery_locations.html

Table 3.1 California Refinery Locations, Capacities, and Products

Refinery Name	Location	Company	Crude Oil Capacity (bbl/day)[a]	CARB Diesel?	CARB Reformulated Gasoline?	Major Products[b]
Southern California (South Coast Air Quality Management District)						
Carson Refinery	Carson, CA	BP	260,000	Y	Y	G, D, J, R
El Segundo Refinery	El Segundo, CA	Chevron	260,000	Y	Y	G, D, J, R
Torrance Refinery	Torrance, CA	ExxonMobil	149,000	Y	Y	G, D, J
ConocoPhillips Wilmington Refinery	Wilmington, CA	ConocoPhillips	133,100	Y	Y	G, D, J, R
Shell Wilmington Refinery	Wilmington, CA	Shell	98,500	Y	Y	G, D, J, R
Valero (Ultramar) Wilmington Refinery	Wilmington, CA	Valero	80,887	Y	Y	G, D, J, R
Paramount Refinery	Paramount, CA	Alon USA Energy	50,000	Y	Y	G, J, R, A, B
ConocoPhillips Santa Maria Refinery	Santa Maria, CA	ConocoPhillips	41,800	N	N	
Long Beach Refinery	Long Beach, CA	Alon USA Energy	26,000	N	N	D, A
Greka Santa Maria Refinery	Santa Maria, CA	Greka Energy	9,500	N	N	A
South Gate Refinery	South Gate, CA	Lunday Thagard	8,500	N	N	A
Valero Wilmington Asphalt Refinery	Wilmington, CA	Valero	5,900	N	N	A

Refinery Name	Location	Company	Crude Oil Capacity (bbl/day)[a]	CARB Diesel?	CARB Reformulated Gasoline?	Major Products[b]
Oxnard Refinery	Oxnard, CA	Tenby Inc.	2,800	N	N	A
Northern California (Bay Area Air Quality Management District)						
Richmond Refinery	Richmond, CA	Chevron	242,901	Y	Y	G, D, J, R
Golden Eagle Refinery	Concord, CA	Tesoro	166,000	Y	Y	G, D R
Martinez Refinery	Martinez, CA	Shell	154,900	Y	Y	G, D, J, R
Valero Benicia Refinery	Benicia, CA	Valero	144,000	Y	Y	G, D, J, R, A
Rodeo Refinery	San Francisco, CA	ConocoPhillips	73,200	Y	Y	G, D, J, R
Central California (San Joaquin Valley Unified Air Pollution Control District)						
Big West of CA	Bakersfield, CA	Big West	66,000	Y	Y	G, D, R
Kern Oil & Refining Co.	Bakersfield, CA	Kern Oil	25,000	Y	Y	G, D, A
San Joaquin Refining Co.	Bakersfield, CA	San Joaquin Refining Co.	24,300	N	N	D, R, A

Sources : http://www.energy.ca.gov/oil/refineries.htm; CEC, Dec. 2006

[a] http://www.energy.ca.gov/oil/refineries.html, as of March 2006

[b] G = gasoline; D = diesel, J = jet fuel; R = residual fuel; A = asphalt; B = blendstocks

Table 3-2. Major Process Units at California Refineries (EIA, 2006)

Refinery	Vacuum Distillation	Coking	Visbreaking	FCCU	Catalytic Hydrocracking	Catalytic Reforming	Alkylation	Hydrogen
Southern California (South Coast Air Quality Management District)								
Carson Refinery	√	√		√	√	√	√	√
El Segundo Refinery	√	√		√	√	√	√	√
Torrance Refinery	√	√		√	√	√	√	√
ConocoPhillips Wilmington Refinery	√	√		√	√	√	√	√
Shell Wilmington Refinery	√	√		√	√	√	√	√
Valero (Ultramar) Wilmington Refinery	√	√		√		√		
Paramount Refinery	√					√		
ConocoPhillips Santa Maria Refinery	√	√						
Long Beach Refinery	√							
Greka Santa Maria Refinery	√							
South Gate Refinery	√							

Refinery	Vacuum Distillation	Coking	Visbreaking	FCCU	Catalytic Hydrocracking	Catalytic Reforming	Alkylation	Hydrogen
Valero Wilmington Asphalt Refinery	√							
Oxnard Refinery								
Northern California (Bay Area Air Quality Management District)								
Richmond Refinery	√			√	√	√	√	√
Golden Eagle Refinery	√			√	√	√	√	√
Martinez Refinery	√	√		√	√	√	√	√
Valero Benicia Refinery	√	√		√	√	√	√	√
Rodeo Refinery	√	√		√	√	√		√
Central California (San Joaquin Valley Unified Air Pollution Control District)								
Big West of CA	√	√			√	√		√
Kern Oil & Refining Co.						√		
San Joaquin Refining Co.	√		√					

3.1.1 California Refinery Unique Characteristics

Key differences between California refineries and those located elsewhere in the U.S. are primarily related to stringent product specifications that exceed the federal requirements and pollution control measures to meet state and local regulations. California reformulated gasoline regulations specify limits on Reid vapor pressure, benzene, sulfur, aromatic hydrocarbons, olefins, and oxygen. Oxygenates were introduced in California to reduce CO emissions from vehicles in 1996, and in 2003 ethanol replaced MTBE as the primary oxygenate.

California reformulated diesel fuel must meet a 15 ppm sulfur limit as of June 2006. Limits on aromatic hydrocarbons at 10 % by volume and polycyclic aromatic hydrocarbons at 1.4 % by weight are also required.

Compliance with the CARB reformulated gasoline and diesel requirements in California requires a significant amount of hydrogen in the critical process units. Hydrogen, generated from several processes in the refinery, is used for hydrotreating to remove sulfur, hydrocracking to produce diesel feedstock, as well as saturation and alkylation processes to generate high octane streams needed for reformulated gasoline. In addition, the low benzene/aromatics specification requires that refineries not rely on catalytic reformer aromatics to provide the octane rating, thus reducing the production of hydrogen from reforming operations. Since hydrogen consumption is high, California refineries optimize their processes to maximize the use of available hydrogen. Outside California, catalytic reformers are still widely used in the refining process to provide a high octane blend.

As a result of the high utilization of hydrogen, there is little excess hydrogen to send to the refinery fuel gas blend. As such, refinery fuel gas composition for the California refineries producing reformulated gasoline and diesel is different than that of a typical U.S. refinery. The hydrogen content of the refinery fuel gas is lower, along with correspondingly higher C2+ hydrocarbon components. The heating value of the fuel gas is also commensurately higher. This has implications for the appropriateness of the published default emission factors used to quantify the CO_2 emissions from refinery fuel gas combustion (see Section 7). For California refineries producing reformulated gasoline, the published default emission factors likely underestimate CO_2 emissions from combustion of refinery fuel gas.

California refineries that process locally produced crude oil with higher heavy hydrocarbon and viscosity characteristics also have a different energy profile than refineries that process light crude. The energy intensity of operations to reduce viscosity, as well as distill and crack/process the heavy hydrocarbon fractions, is relatively high.

Other differences in operations at a California refinery as compared to a typical U.S. refinery are associated with the stringent air quality standards that must be met in California. Some of the control requirements in California include:

- Primarily refinery fuel gas, natural gas, and LPG are fired in combustion sources in refineries in California. In refineries outside California, it is also common to find refinery fuel oil used as a fuel source.
- Combustion sources equipped with low NOx burners and selective catalytic reduction (SCR) for NOx control in California refineries.
- Storage tanks with fixed roof tanks connected to a vapor recovery system to control volatile organic compound (VOC) emissions.
- Pressure relief valves on process units are routed to a closed loop system.
- In the Bay Area, source streams routed to a flare must be monitored and reported.

Table 3-3 indicates the likely impact of these control requirements on GHG emissions.

Table 3-3. Projected Impact of Air Quality Controls on GHG Emissions

Typical Control Requirement	Likely Impact on GHG Emissions
Utilization of gaseous fuels, rather than refinery fuel oil	GHG emissions are lower for natural gas, refinery fuel gas, and LPG combustion, as compared to refinery fuel oil or residual oil.
Low NO_x burners	Newer generation low NO_x technologies may be more efficient, thus resulting in lower GHG emissions than conventional technologies.
Selective catalytic reduction (SCR)	An external control device, such as SCR, has an associated energy penalty as compared to the same source without the external control device. This energy penalty would imply higher GHG emissions associated with the control device application.
Storage tanks with vapor recovery	Net reduction in GHG emissions
Pressure relief valves routed to closed loop system	Net reduction in GHG emissions
Flare gas monitoring and reporting	Net reduction in GHG emissions

3.1.2 California Refinery Emissions Characteristics

According to estimates prepared by the California Air Resources Board (CARB) using data from Energy Information Administration and the California Energy Commission, the total estimated GHG emissions from the petroleum refinery sector was 29.16 million metric tonnes CO2 equivalent emissions in 2004 (CARB, 2007). Although there are outstanding questions about the accuracy of this figure based on the source data and emission factors applied, this represents about 6 percent of the California statewide estimated GHG emissions (CEC, 2006).

Table 3-4 presents the Bay Area reported GHG emissions summary for 2002 from the five refineries in the Bay Area as reported by the Bay Area Air Quality Management District (BAAQMD, 2006). As shown, the contribution of process and combustion source emissions from petroleum refineries to the total GHG emissions for all sources in the Bay Area is also around 6 percent.

Table 3-4. Bay Area GHG Contribution from Petroleum Refineries for 2002 (BAAQMD, 2006)

Source	CO_2 tonnes/yr	CH_4, tonnes/yr	N_2O, tonnes/yr	CO2e, tonnes/yr
Petroleum Refining Processes	470,485	796	18	492,781
Petroleum Refining External Combustion	4,795,005	442	40	4,816,687
Total Petroleum Refining	5,265,490	1,238	58	5,309,468
Bay Area Total	76,816,075	182,387	13,761	84,912,112

3.2 California Petroleum Refinery Reporting Requirements

From 1985 to 1995, 10 refineries in California were closed, resulting in a 20 percent reduction in refining capacity. These closures were due primarily to the cost of complying with environmental regulations, coupled with low product prices. To comply with federal and state regulations, California refiners invested approximately $5.8 billion to upgrade their facilities to produce cleaner fuels, including reformulated gasoline and low-sulfur diesel fuel.

California refiners must comply with a number of federal, state, and district air quality emission reporting requirements. While these reporting requirements have historically not included mandatory GHG emissions reporting, the same operational data is often collected to support other air quality reporting requirements.

Federal standards for which petroleum refining operations must comply in the US include, but are not limited to:

- Petroleum Refinery New Source Performance Standard (NSPS) requires leak detection and repair (LDAR) procedures in refineries to control VOC emissions from equipment components (40 CFR 60 subpart VV). The NSPS requires particulate matter (PM) and carbon monoxide (CO) controls for catalyst regeneration from the catalytic cracking and catalytic reforming processes. The NSPS rules require, for example, that the catalytic

regeneration processes track the regenerator air flow rate and measured exhaust compositions of CO2 and CO to calculate the coke burn rate.

- Hazardous organic national emission standards for hazardous air pollutants (NESHAP) rule for the synthetic organic chemical manufacturing industry (known as the SOCMI "HON" rule), which was promulgated in February 1994 (40 CFR part 63 subpart H) requires LDAR procedures and process vent controls.
- Benzene waste NESHAP rule (40 CFR 61 Subpart FF) requires control of wastewater streams containing more than a threshold concentration of benzene.
- Petroleum Refinery Maximum Achievable Control Technology (MACT) Standard: The petroleum refining MACT standard requires the control of hazardous air pollutant (HAP) emissions from process vents, catalytic cracking, catalytic reforming, sulfur recovery, storage vessel loading, wastewater collection and treatment, gasoline loading racks, marine vessel loading, and equipment leaks. While the petroleum refining MACT standard requires the overall facility-wide control of HAPs, it allows the facility to use an emissions averaging approach to allow flexibility in the emission points controlled. Process vents from the catalyst regeneration operations associated with catalytic cracking and catalytic reforming are subject to control and demonstration of compliance under the rule.

Many of these regulations overlap, and EPA has issued guidance on requirements if a refinery is subject to more than one of these rules.

In addition to EPA regulations, the US Department of Energy, Energy Information Administration (EIA) requires petroleum refinery reporting of process charge rates and products. This information is published and is publicly available on the EIA's website.

In California, many state and district agency rules apply to petroleum refining operations. While not exhaustive, a few of the relevant rules with mandatory reporting requirements include:

- Petroleum Industry Information Reporting Act (PIIRA) requirements include the annual reporting of product production yields, wholesale fuel prices, imports, exports, product inventory, storage, transportation, distribution, and marketing activities.
- Annual air emissions inventory reporting under Title V of the Clean Air Act includes the reporting of criteria pollutants and HAPs emissions for combustion, vented, fugitive sources. These reporting requirements for non-GHG emissions would generally be based on the same or similar process data as required for GHG emissions reporting.
- Air Quality District rules may have more stringent or additional requirements than the federal or California Air Resources Board (CARB) rules. For example, the Bay Area Air Quality Management District (BAAQMD),

requires monitoring and reporting of process source streams which are routed to a flare.

4.0 Petroleum Refinery GHG Emissions Source Characterization

The GHG emissions sources that are identified in a petroleum refinery are characterized as combustion, vented, and fugitive sources. This section presents the GHG emissions sources and a relative profile of materiality of the corresponding sources in a typical refinery. Subsequent sections will identify and evaluate the emissions estimation methodologies within the context of accuracy relative to the level of materiality of the source.

4.1 Direct GHG Emissions Sources

The direct sources of GHG emissions associated with the refinery processes and support operations include:

- Stationary combustion sources comprised of direct-fired heaters, boilers, flares and other sources;
- Mobile combustion sources associated with on- and off-site vehicles that are company owned and off-road vehicles and equipment (e.g., construction equipment).
- Vented sources such as process vents, storage tank losses, equipment venting from maintenance/turnaround events.
- Fugitive sources such as equipment component losses, wastewater treatment, and cooling towers.

4.1.1 Combustion Emissions

Stationary Combustion Sources. Petroleum refining is energy intensive and most process operations require heat, which is provided by direct-fired heaters or distillation reboilers, steam or heat provided from a steam boiler or waste heat recovery system. Stationary combustion sources within a refinery are numerous and include:

- Direct-fired heaters and distillation reboilers associated with the process operations throughout the refinery.
- Boilers providing steam and heat.
- Internal combustion engines for gas compression or emergency power generation;
- Gas turbines used primarily for co-generating electricity and steam, or for gas compression.
- Thermal, catalytic oxidizers, and incinerators for controlling VOC or air toxic emissions;
- Flares for non-routine operations (e.g., emergencies, maintenance, turnovers), sour tailgas oxidation.
- Small combustion sources such as fire water pumps.

.

Common fuels utilized in stationary combustion sources in California refineries are refinery fuel gas, LPG, and natural gas. Other fuels may be used, but in significantly lower quantities due to the stringent air quality regulations. These supplemental fuels may include fuel oil (e.g., distillate, diesel), residual oil, and petroleum coke.

Of these fuels consumed in a refinery, the most important is refinery fuel gas as it is the primary fuel source in most refineries. As previously discussed, the refinery fuel gas composition in California refineries producing reformulated gasoline and/or diesel will tend to be relatively low in hydrogen and rich in C2+ constituents. The composition of refinery fuel gas in most refinery configurations is consistent or homogeneous at a given time, as the refinery fuel gas is typically blended in a central fuel gas system. Although fuel composition from a central fuel gas system would be homogenous at a given point in time, the composition and heat content of refinery fuel gas can vary over relatively short periods of time. This variation is primarily due to the variability in crude feedstock composition and product mix.

Since refinery fuel gas is the primary fuel utilized in a typical refinery, its accurate characterization is imperative to the overall accuracy of GHG emissions from the refinery. Therefore, careful consideration of sampling locations, sampling frequency, and parameters measured is critical for adequate refinery fuel gas characterization. Many refineries measure either heating value or carbon content in refinery fuel gas continuously in order control and optimize process operations. These refineries use either non-dispersive infrared (NDIR) to measure total heating value or on-line gas chromatography (GC) to provide hydrocarbon speciation (e.g., H_2, C_1, C_2, C_3, C_4, C_{5+}, etc.) from which heating value is derived. Many refineries also collect a periodic (typically daily) batch sample for analysis in the laboratory using GC.

There are some refineries, however, that may have more than one blend drum for refinery fuel gas and/or streams may be added downstream of the blend drum. For these configurations, more than one gas stream would need to be sampled and analyzed, with corresponding fuel consumption rates monitored.

Combined Heat and Power. For combined heat and power (CHP), or cogeneration systems, the direct emissions from fuel combustion may require allocation between the thermal energy and electricity streams for cases where part of the energy produced is used off-site or exported. There are several methods that have been proposed for allocating emissions between the thermal energy and electricity streams (see Section 7).

Mobile Combustion Sources. Mobile sources may include on- and off-site vehicles and off-road vehicles and equipment (e.g., construction equipment such as cranes). Transport of crude oil and products are also important functions, but the vessels/vehicles are typically not owned and operated by the petroleum refining company (see Section 5 for a discussion of boundaries).

4.1.2 Vented emissions

Vented GHG emissions from a petroleum refinery include emissions associated with process operations, storage tanks, loading/ballasting, and non-routine operations.

Process Vents. Vented CO_2 emissions from process sources include:

- Hydrogen production;
- Catalyst regeneration operations;
- Coking operations; and
- Sulfur recovery unit.

Hydrogen production is most generally produced from natural gas, but can be produced from refinery fuel gas, LPG, naphtha, or other light hydrocarbon streams.. Steam reforming is a catalytic process that reacts natural gas or other light hydrocarbons with steam to form a mixture of hydrogen, carbon monoxide, carbon dioxide and water that is produced in a series of three reactions. Hydrogen production from steam methane reforming results in a highly concentrated CO_2 process vent stream. This is one of the significant vented emission sources from refineries that have a hydrogen production plant.

Catalyst regeneration is another source of vented CO_2, where coke deposited on the catalyst is oxidized to restore catalyst activity. FCCU catalyst regeneration is a continuous process and significant from a GHG emissions perspective. Other catalytic processes also regenerate the catalyst periodically in an on- or off-site regeneration process.

Coking operations result in large quantities of CO, which is usually ducted to a nearby boiler and used as low-Btu fuel gas. The boiler completes the oxidation of CO to CO2 and may fire supplemental fuels (such as natural gas or refinery fuel gas) to the production of steam and power. The vent stream resulting from the coking operations is classified as a vented source of GHG emissions from coking operations, whereas the supplemental fuel would be classified as combustion emissions.

In sulfur removal operations, sour gas containing H_2S from the coker, catalytic cracking unit, hydrotreating and hydroprocessing units is first treated in a sulfur removal process to remove the sulfur from light hydrocarbon gases. The sour gas stream is typically treated in a chemical solvent countercurrent absorption system, called an amine unit. The commonly used chemical solvents are amines, such as diethanolamine (DEA) or methyl-diethanolamine (MDEA). The H_2S is selectively absorbed in the amine solution for removal from the gas stream, and then subsequently stripped from the rich amine solution in a regenerator. The concentrated sour gas stream from the amine regenerator is sent to a sulfur recovery process, such as a Claus process, followed by a secondary removal system and/or incinerator (or flare). The amine solution in the sulfur removal process also selectively absorbs any CO_2 in the gas stream. The CO_2 removed from the gas stream in the amine solvent process will be carried through in the tailgas from the sulfur removal operations, and routed to an incinerator or flare. In some refineries, a Shell Claus Offgas Treating (SCOT) technology is used for tail gas clean up. The last stage in the SCOT process is an amine absorber where H_2S is selectively absorbed, the rich amine regenerated, and the H_2S recovered routed back to the front end of the Claus unit. In this configuration, any CO_2 in the tailgas stream would be selectively absorbed and routed back to the front end of the Claus process along with the H_2S.

Other Vented Sources. Other sources of vented emissions in a refinery include storage tank losses, product loading and ballasting, and non-routine vents. Storage tank losses occur during tank loading due to the displacement of the vapor space in the tank, and from diurnal temperature variations also affecting the density of stored liquids and gases in the head space. While a concern for VOC emissions, the only GHG constituent of concern is CH4. Since the gaseous components are separated from crude oil during upstream production, the crude supplied to a refinery has a very low molar concentration of methane in the crude, resulting in a low partial pressure at ambient temperatures. Hence, the methane concentration in the vented emissions from crude storage is very low. Further, crude storage tanks at California refineries have vapor recovery systems which recover the vented hydrocarbons. Note that if the vapor control system oxidizes the hydrocarbon constituents, these emissions would be considered combustion emissions, and are expected to be very low relative to other combustion sources at the refinery.

Other product or intermediate/feedstock storage tanks have negligible methane content in the stored liquid and are not considered sources of GHG emissions. Further, these tanks are typically equipped with VOC controls, such as floating roof tanks or fixed roof tanks equipped with vapor recovery.

Product loading into marine vessels, tanker trucks or railcars is another potential source of GHG emissions. However, as previously stated, the methane content of the products or intermediates is negligible, and therefore product loading for refinery is not considered a source of GHG emissions. Note, however, that crude oil loading into transport vessels at the production site does result in small quantities of vented methane emissions.

Non-routine venting may be due to emergency conditions, start-up and shut-down of equipment, maintenance and turnaround events where gas may be released. For most refinery processes, the vessel vents are routed to a flare and would be captured as flared emissions. Also, the methane content of most vented gas streams would be relatively insignificant.

4.1.3 Fugitive emissions

Fugitive emissions sources, defined as non-point sources, in a petroleum refinery include:

- Equipment component emissions
- Wastewater treatment
- Cooling tower

Losses from equipment components, such as valves, flanges, compressor and pump seals, are a potential source of GHG emissions for streams that have a significant fraction of methane. However, most components in a refinery are in low-methane content service. Conventionally, API and other sources have considered fugitive emissions to be small and insignificant. The exception is the fuel gas system, where methane content may be relatively high. However, the number of equipment components in refinery fuel gas and natural gas service are low relative to the overall number of components in a refinery.

Historically, therefore, the prevailing opinion has been that the contribution of fugitive methane losses from equipment leaks is insignificant. Leak detection and repair (LDAR) programs would already include screening of components in refinery fuel gas service, although the data collected would likely not differentiate between the refinery fuel gas system and all components in gas service.

As methane loss studies have not historically been focused on refining operations, there exists a relatively large degree of ambiguity and uncertainty concerning the importance and size of refinery fugitive methane emissions. Recent studies using portable infrared optical technology suggest that fugitive methane emissions may be more important than previously thought. Optical methods suggest that fugitive methane emissions may represent 1-2% of total GHG emissions from a typical refinery. While still small in the context of facility-wide emissions, fugitive emissions may be on the order of 50,000 tonnes CO_2 equivalent emissions from a typical refinery, based on these studies (U.S. EPA, 2006) (Alberta Research Council, 2006). The largest source of methane emissions from the refinery tested was the delayed coker area (41.7% of the total), which included the vacuum unit and coker water pond. Cooling towers and crude feed tanks contributed 9 and 6 %, respectively. These measurements for a Canadian refinery should be assessed in the context of overall relevance to refining operations in California, especially with respect to LDAR practices[1].

A number of other fugitive sources of VOC emissions are present in a refinery, but generally methane emissions are insignificant from these sources. Other potential fugitive sources may include wastewater treating, sludge/solids handling, impoundments, pits, and cooling towers.

Anaerobic wastewater treatment does result in small quantities of CH_4 being emitted as part of the organic decomposition process. Anaerobic wastewater treatment is not very common in refining operations. Further, the CH_4 emitted may in some cases be recovered rather than vented to the atmosphere.

4.2 Indirect Energy GHG Emissions Sources

Indirect emissions are defined as emissions associated with energy, processes or operations that are core to the business but occur outside the boundaries of reporting. Indirect emissions from energy imports, or Scope 2 emissions, include electricity consumption from power imported from the grid or a third party supplier, and heat and steam imports from a third party.

4.2.1 Other Indirect GHG Emissions Sources

[1] The LDAR practices relevant to the Canadian refinery tested are in accordance with the Environmental Code of Practice for the Measurement and Control of Fugitive VOC Emissions from Equipment Leaks, published by the Canadian Council of Ministers of the Environment.

Other indirect GHG emission sources that are typically considered outside the refinery boundaries but core to the refining business may include: Identification and discussion of GHG emissions sources from other indirect (Scope 3) emissions

- Crude loading, ballasting, transit
- Feedstock and product transport
- Off-site catalyst regeneration
- Off-site waste disposal/landfill operations

The loading, ballasting, and transport of crude oil to the refinery contribute to methane vented losses that are upstream of the refinery boundary. The mobile source combustion emissions associated with transportation of crude oil, finished products or intermediate products in marine vessels, railcar, or tanker trucks also contribute to indirect emissions.

Other potential indirect emission sources include the off-site regeneration of spent catalyst by third parties and off-site waste disposal or landfill operations.

4.3 Source Contributions to Facility-wide Refinery Emissions

Although there are many point and fugitive sources associated with refinery operations, the contribution of only a few source types are significant. Table 4-1 presents the relative magnitude of GHG emissions by source type and by pollutant type based on a refinery case study included in the API Compendium (API, 2004). The table shows the percent contribution of each source type on the basis of CO_2 equivalent emissions, broken down by GHG constituent (i.e., CO_2, CH_2, N_2O) for each source type.

The table presents the emissions factors used for the combustion of the flare, but does not take into account when the flare is not lit. Emissions during periods when flare is not lit are captured under the emergency or maintenance events calculations.

As shown, combustion emissions and vented process emissions dominate the contribution to total GHG emissions from the refinery case study. These relative contribution levels are considered typical for a refinery with hydrogen production, based on URS' in-house knowledge of GHG emissions from refining operations. The most significant sources of GHG emissions from refining operations include:

- External and internal combustion (50% of total GHG emissions) from firing refinery fuel gas, natural gas, and LPG as primary fuels in California refineries;
- FCCU catalyst regeneration (35% contribution);
- Hydrogen production (11% contribution); and
- Flaring (3%).

Depending on the refinery product mix, the contribution from hydrogen production may be much higher than around 10% that is shown in this hypothetical case study.

Table 4-1. Indicative Contributions of Greenhouse Gas Emission Sources from a Typical Petroleum Refinery

Source Type	Source	Percent Contribution to Total CO_2 Equivalent Emissions		
		CO_2	CH_4	N_2O
Combustion Sources	External combustion	42.3	3.9 E-3	7.1 E-2
	Internal combustion	7.4	1.7 E-1	5.6 E-1
	Flares[a]	2.8	1.2 E-4	0
	Incinerators	0.3	3.0 E-5	5.5 E-4
	Combustion Total	**52.9**	**1.8 E-1**	**6.3 E-1**
Vented sources	Hydrogen plant vents	10.7	0	0
	Catalytic cracking regeneration vent	35.2	0	0
	Storage tanks	0	Negligible	0
	Loading / transit	0	0	0
	Vented Total	**45.9**	**0**	**0**
Fugitive Sources	Fugitive components	Negligible	?[b]	0
	Fugitive Total	Negligible	Negligible	0
Indirect Sources	Electricity purchased	5.8 E-1	2.6 E-4	2.7 E-2
	Indirect Total	5.8 E-1	2.6 E-4	2.7 E-2

Source: API Compendium, Table 7-24, 2004

[a] Flare emissions account for combustion emissions only and do not take into consideration the unburned methane for events where the flare is unlit.

[b] Optical infrared techniques for measuring methane emissions from equipment components have indicated that the contribution could be on the order of 1-2% of the refinery total emissions (refer to Section 4.1.3).

5.0 Boundary Considerations for GHG Reporting

This section of the discussion paper sets out options for sector-specific boundaries, building from the general guidance in the CCAR General Reporting Protocol. Under the Registry general guidelines, entities have organizational boundary options to report GHG emissions from their operations, using the general or industry sector protocols. Special considerations for operational and organizational boundaries as they relate to petroleum refining operations are highlighted below.

5.1 Installation Definition Precedents

There are a number of precedents for defining the operations and facilities associated with the petroleum refining sector. A summary of definitions both specific to petroleum refining, as well as general definition of facility boundaries, is presented in Table 5-1, including:

- U.S. EPA Maximum Achievable Control Technology (MACT) standard for petroleum refining, Title 40, Chapter I, Part 63 to the CFR, cross references the SIC 2911 definition;
- Standard Industrial Classification (SIC) 2911 for petroleum refining operations;
- North American Industrial Classification System (NAICS) 324110 for petroleum refineries;
- Prevention of Significant Deterioration (PSD): PSD under Title I of the Clean Air Act requires stationary sources of air pollution to get permits before they start construction. The PSD rules provide guidance on the definition of a "single stationary source" or facility for permitting purposes; and
- EU Emissions Trading Scheme (ETS) definition of installation.

Table 5-1. Petroleum Refining Sector Definition Precedents

Reference	Sector Description
Refinery MACT	Petroleum refining affected source defined to include petroleum refinery process vents, marine tank vessel loading operations, and gasoline loading rack operations classified under Standard Industrial Classification (SIC) code 2911 emission points located at petroleum refineries.
SIC 2911	This category covers establishments engaged primarily in producing gasoline, kerosene, distillate fuel oils, residual fuel oils, and lubricants through fractionation or straight distillation of crude oil, redistillation of unfinished petroleum derivatives, cracking, or other processes. The operations, products, and sources included in this definition are summarized in Annex B.
NAICS 324110	This industry comprises establishments primarily engaged in

Reference	Sector Description
	refining crude petroleum into refined petroleum. Petroleum refining involves one or more of the following activities: (1) fractionation; (2) straight distillation of crude oil; and (3) cracking. The operations, products, and sources included in this definition are summarized in Annex B.
Prevention of Significant Deterioration (PSD)	40 CFR Part 70 rules provide that plants should be considered a single stationary source if they meet all of the following three criteria: o Belong to the same SIC major (2-digit) group. If the plants could have separate SICs but a support relationship exists, e.g., 50% of the product of one is utilized by the other, then one plant is considered a support facility and this criterion shall be considered met, o Are located on one or more contiguous or adjacent properties (in the same general area), and o Are under common ownership or control. If the applicant challenges the existence of common control, it may be necessary to look at the contractual agreement between the facilities to determine if they are under common control.
EU ETS	"Installation" means a stationary technical unit where one or more activities listed in Annex I (e.g., mineral oil refining) are carried out and any other directly associated activities which have a technical connection with the activities carried out on that site and which could have an effect on emissions and pollution.

The definitions that are specific to petroleum refineries are consistent with respect to the processes, products, and sources, all referencing the SIC 2911 definition. The more general definitions of installation from PSD and EU ETS consider the associated activities and where facility boundaries are drawn for purposes of inclusion under the respective rule. PSD rules specify three criteria which must be met for consideration as a single “source” (where “source” defines the emission points included). The important considerations for facility definition under PSD include location on contiguous or adjacent properties and under common ownership or control.

The Preamble of the 1980 Prevention of Significant Deterioration (PSD) rule discusses the situation of a support facility being included with another facility as one source classification: Each source is to be classified according to its primary activity, which is determined by its principal product. Thus, one source classification encompasses both primary and support facilities, even when the latter includes units with a different two-

digit SIC code. Support facilities are typically those which convey, store or otherwise assist in the production of the principal product. (45 ~FR 52695, August 7, 1980)

EPA Region VII has outlined several screening questions to assist in determination of common control for support facilities:[2]

Do the facilities share common workforces, plant managers, security forces, corporate executive officers, or board of executives?

Do the facilities share equipment, other property, or pollution control equipment? What does the contract specify with regard to pollution control responsibilities of the contractee? Can the managing entity of one facility make decisions that affect pollution control at the other facility?

Do the facilities share common payroll activities, employee benefits, health plans, retirement funds, insurance coverage, or other administrative functions?

Do the facilities share intermediates, products, byproducts, or other manufacturing equipment? Can the new source purchase raw materials from and sell products or byproducts to other customers? What are the contractual arrangements for providing goods and services?

Who accepts the responsibility for compliance with air quality control requirements? What about for violations of the requirements?

What is the dependency of one facility on the other? If one shuts down, what are the limitations on the other to pursue outside business interests?

Does one operation support the operation of the other? What are the financial arrangements between the two entities?

5.2 Organizational Boundary Options

In many cases in the petroleum refining sector, the ownership structure is straightforward for the process and support operations from the point of custody transfer of the crude oil at the terminal to the loading of products for transport off-site. In other cases, support operations such as hydrogen production and cogeneration may be third party owned and operated or the ownership structure may be more complex.

Under the Registry guidelines, operations or facilities which are wholly owned should report 100 percent of their emissions. For operations where the entity has a partial

[2] Letter from W. Spratlin, Director of Air, RCRA, and Toxics Division, EPA Region VII, to State and Local Air Directors, September 18, 1995

ownership share or working interest, hold an operating license, lease, or otherwise represent joint ventures or partnerships, there are two basic options for establishing organizational boundaries for reporting GHG emissions: management control and equity share. Management control reporting can be based either on operational or financial criterion.

Once the geographical boundaries for reporting have been established the entity is expected to evaluate all operations, facilities, and sources within the appropriate geographical setting and establish a consistent approach for reporting GHG emissions from operations within those boundaries.

The IPIECA Guidelines provide detailed accounting guidance on operational control and equity share reporting for complex ownership arrangements in the oil and gas industry. Typically, refining operations are wholly owned and operated, but there may be complex ownership and operational arrangements for support operations.

Table 5-2 presents a summary of the organizational boundary reporting options from relevant schemes and registries that have addressed GHG emissions accounting approaches. The precedents under management control and equity share accounting are discussed below.

Table 5-2. Summary of GH G Emissions Accounting Approaches

Standard	Accounting Approach	Definition
WRI/WBCSD Corporate Protocol	Operational Control	Company has full authority to introduce and implement operating policies at the operation.
	Financial Control	Company has ability to direct financial and operating policies over the operation, with a view to gain economic benefits from the activities.
	Equity Share	Company accounts for GHG emissions from operations according to its share of equity or economic interest.
CCAR General Reporting Protocol	Operational Control	Company has the authority to develop and carry out the operating or health, safety, and environmental policies of an operation or at a facility.
	Financial Control	Company has financial control over an operation if it has the ability to dictate or direct the financial policies of an operation with the ability to gain the economic rewards from activities of the operation or facility.
	Equity Share	Company reports percentage of GHG emissions based on share of financial ownership of operations.

Standard	Accounting Approach	Definition
IPIECA Guidelines	Operational Control	Company has authority to introduce and implement its operational and environmental, health, and safety policies at the joint venture.
	Financial Control	Not included.
	Equity Share	Company accounts for GHG emissions from operations according to its share of equity, or economic interest, in the operation.
EU ETS Guidelines	Operational Control	Company who operates or controls an installation or, where this is provided for in national legislation, to whom decisive economic power over the technical functioning of the installation has been delegated.
	Equity Share	Not included.

5.2.1 Management Control Reporting

While the Registry allows management control reporting based on either financial or operational criterion, the oil and gas industry reporting guidelines (IPIECA, 2003) only consider operational control. The definition of operational control by both the Registry and IPIECA guidelines are consistent. The IPIECA guidelines state that operational control is when "the company has authority to introduce and implement its operational and environmental, health, and safety policies at the joint venture" (IPIECA, 2003). The Registry General Reporting Protocol states that "operational control is the authority to develop and carry out the operating or health, safety, and environmental policies of an operation or at a facility".

Under the operational control accounting approach, the entity reports 100 percent of the emissions from assets under which it has operational control, and none of the emissions from assets it does not control, even if the entity has majority financial ownership.

The definition of operational control under the EU Emissions Trading Scheme is centered on the definition of operator, as: "operator" means any person who operates or controls an installation or, where this is provided for in national legislation, to whom decisive economic power over the technical functioning of the installation has been delegated. Interpretation of this definition is further clarified by the UK Department of Environmental and Food Regulatory Authority (DEFRA) as having the ability to (DEFRA, 2006):

- Manage the site's day to day control of plant operations, including the manner and rate of operation;
- Ensure compliance with permit conditions;
- Hire and fire key staff;
- Make investment decisions; and

- Ensure that operations are shut down in an emergency.

The Registry and WRI Corporate Accounting Guidelines also allow management reporting by financial control. An entity has financial control over an operation if it has the ability to dictate or direct the financial policies of an operation with the ability to gain the economic rewards from activities of the operation or facility. The financial control approach to GHG emissions accounting reports 100 percent of the emissions associated with operations under financial control by the entity, and no emissions for operations for which it does not control financially.

5.2.2 Equity Share Reporting

Equity share reporting accounts for GHG emissions in accordance with the percentage of equity or financial interest in an operation, facility, or source. The economic interest is defined as the extent of rights the entity has to risks and rewards flowing from the operation.

The equity share approach for GHG emissions accounting extends to situations where companies or subsidiaries have joint ownership of operations. In certain situations in the refining sector, companies may have joint ownership of the entire refining complex, or for certain support operations such as hydrogen production or cogeneration. In these cases, under the equity share accounting approach, entities would follow equity arrangements as described in contracts with their ownership partners.

5.2.3 Petroleum Refining Sector Considerations

For most refinery process operations, a single entity wholly owns and operates the facility. Under this scenario, accounting for GHG emissions from these wholly owned and operated processes is straightforward, with 100 percent of emissions reported under operational and financial control and equity share organizational boundaries.

In other cases, complex ownership and operational arrangements are not uncommon for support operations and other co-located facilities such as hydrogen production, cogeneration of heat and power, nitrogen production, crude unloading, product loading, and petrochemical production operations. Ownership and operational arrangements for some core or support operations may include:

- Owned and operated by third party.
- Owned by third party, operated by refining company.
- Joint ventures in which refining company is equity partner. Several potential scenarios for operational control may exist for joint ventures, including:
    - Operation by refining company.
    - Operation by others.

- Operation by joint venture Corporation, in which refining company has an equity share.

Table 5-3 illustrates how GHG emissions would be reported under each potential option for emissions accounting in accordance with the Registry General Reporting Protocol.

5.3 Geographical Boundary Options

Geographic boundaries reflect the physical location of the reporting petroleum sectors' facilities and operations. This is distinctly different than organizational boundaries, which reflect financial, legal and operational relationships that are discussed in Section 5.2 above.

Geographical boundary options under the California Registry program include:

- Reporting of California statewide emissions only; or
- Reporting of total U.S. emissions for all sources as a whole.

Although the Registry does accept the reporting of international emissions, certification under the Registry does not apply outside the U.S.

For the direct emissions from the refinery itself, the facility-wide emissions are typically within a refinery fence-line and geographic location is well defined. However, for the transport of raw materials (primarily crude oil) and products which are typically considered other indirect sources of emissions outside the refinery organizational boundary, cross-border transfers across jurisdictional lines, such as state, provincial, or national boundaries, are common.

Table 5-3. GHG Emissions Reporting under Alternate Ownership and Operational Structures

Scenario		GHG Emissions Accounting by Entity/Owner		
Owner	**Operator**	**Operational Control**	**Financial Control**	**Equity Share**
Wholly owned by entity	Operational control by entity	100%	100%	100%
Wholly owned by third party	Operational control by third party	0%	0%	0%
Wholly owned by third party	Operational control by entity	100%	0%	0%
Entity has equity share and financial control	Operational control by entity	100%	100%	By equity share
Entity has equity share and financial control	Operational control by third party	0%	100%	By equity share
Entity has equity share, but not financial control	Operational control by entity	100%	0%	By equity share
Entity has equity share, but not financial control	Operational control by third party	0%	0%	By equity share

5.4 Operational Boundary Considerations

The operational boundary considerations for the petroleum refining sector include the facilities, processes, and emissions sources to be reported under the organizational boundary accounting options(s) selected. A general characterization of the direct and indirect emissions sources is presented in Section 4 above. Table 5-4 summarizes the GHG emissions sources and cross-references the appropriate section of this discussion paper that lays out the associated options available for estimation methodologies

Table 5-4. Operational Boundary Sources

Emission Category	Sources Covered	Methodology Section Reference
Direct – Stationary Combustion	Heaters/reboilers Boilers IC engines Gas turbines Emergency generators Fire water pumps	7.1.2
	Flares Catalytic and thermal oxidizers Incinerators	7.1.3
Direct or Indirect – Mobile Source Combustion	On- or off-road vehicles Off-road construction Marine, rail, tanker truck vehicles	7.1.4
Direct or Indirect -- Vented	Catalyst regeneration	7.2
	Hydrogen production	
	Coking operations	
	Sulfur recovery	
	Crude storage tank losses	
	Product loading	
	Non-routine emergency, maintenance, shut-down and start-up operations	
Direct or Indirect -- Fugitive	Equipment component leaks	7.3
	Cooling tower	
	Wastewater treatment	
	Landfill	

6.0 GHG Emissions Methodologies Overview

This section of the discussion paper introduces the general underlying approaches used for quantifying emissions from sources within the industry. The ranking or levels of accuracy of methodologies has been addressed by different schemes, which are presented in conceptual approach in Section 6.1.

6.1 Methodology Accuracy Characterization

The accuracy of estimated GHG emissions for any given source is based not only on the accuracy of the underlying source data or activity data, but also on the inherent uncertainty associated with the estimation methodology used. This inherent uncertainly associated with the methodology, however, is usually qualitatively addressed, while the activity data uncertainty is quantified for purposes of data verification. The approaches taken by different accounting standards for categorizing the relative level of accuracy of a methodology include:

- Preferred and alternative approaches as defined by the API Compendium;
- Tiered approach from A to C as defined in the IPIECA Guidelines, with A being the most accurate; and
- Tiered approach from the EU ETS Monitoring and Reporting Guidelines, based on the category (i.e., total emissions) of the facility.
- Tiered approach from A to D as defined in the DOE Technical Guidelines, with A being the best available estimation.

The API Compendium (API, 2004) presents methodologies in terms of a preferred approach and alternate approach(es). Decision diagrams are provided to guide the user through the available options where the choice of one approach over another is often dictated by the available data. Figure 6-1 from the API Compendium provides a general hierarchy of estimation approaches from least to most accurate. In general, site-specific data is considered more accurate than published default emission factors.[3]

[3] Published emission factors in some instances are based on large data sets and may not necessarily be the least accurate approach for sources or fuels that are not expected to vary significantly from site to site.

Types of Approaches	____Hierarchy
Published emission factors	
Equipment manufacturer emission factors	
Engineering calculations	
Monitoring over a range of conditions and deriving emission factors	
Periodic monitoring of emissions or parameters for calculating emissions	
Continuous emissions* or parameters monitoring	

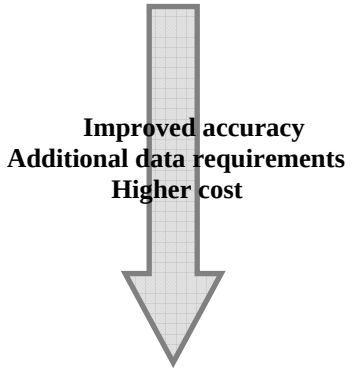

*Continuous emissions monitoring applies broadly to most types of air emissions, but may not be directly applicable nor highly reliable for greenhouse gas emissions.

Figure 6-1. General Accuracy of Estimation Approaches

The IPIECA Guidelines (IPIECA, 2003) provides an estimated range of uncertainty associated with the three tier classifications. These uncertainty ranges associated with methodologies include:

- Tier A, the highest level of accuracy: +/- 10-30%
- Tier B, intermediate level of accuracy: +/- 20-40%
- Tier C, lowest level of accuracy: +/- 30-60%

The EU ETS Monitoring and Reporting Guidelines define tiers from 1 to 3 in order of increasing accuracy commensurate with the overall materiality of the emissions from an installation. Tiers are defined for activity data, net calorific value, emission factor, composition data, oxidation factor, and conversion factor.

The DOE Technical Guidelines define tiers from A to D in order of decreasing accuracy, reliability, verifiability, and practical application. Each letter represents a numerical point value, A=4 pt, B=3 pt, C=2 pt, and D=1 pt. A weighted rating average can be determined for a facility by dividing each individual source contribution by the total emissions from the facility, multiplying the individual emissions ratio by point value of the method used, and summing all of the individual values.

6.2 General Emissions Methodology Approaches

In the most simplistic approach, GHG emissions are quantified as a product of activity data and an emission factor. The emission factor, however, can be quantified based on site-specific data or by using a default factor approach. This section provides an introduction to the general categories of emissions methodologies.

Methods can generally be classified as fuel- or composition-based approaches, direct measurement approaches, and default emission factor approaches. Vented approaches

may also be a derivation of a mass balance approach based on composition. General approaches include:

- Fuel-based methods for CO_2 emissions quantification consisting of:
  - A mass balance approach based on fuel composition and a default oxidation factor to account for incomplete combustion;
  - Use of default emission factor that is adjusted for the actual fuel heating value.
- CEMS emissions measurements for CO_2 (concentration) and exhaust gas flow measurement or estimation.
- Default emission factor approaches for CO_2, CH_4, and N_2O.
- Composition-based approaches for vented or fugitive emissions.
- Mass balance approaches for HFC (or SF6) losses (e.g., the Registry General Reporting Protocol HFC method)

6.3 Methodology Review

The methodologies reviewed as part of this discussion paper build on earlier work performed in: a) development of the API Compendium; and b) a comparison study commissioned by API to compare the Compendium methodologies with other published documents. As part of the API Compendium development, a number of GHG emissions estimation protocols and inventory reports were reviewed that are relevant to petroleum refining:

- American Petroleum Institute (API). Methane and Carbon Dioxide Emission Estimates from U.S. Petroleum Sources, January 1997.
- Canadian Association of Petroleum Producers (CAPP). Global Climate Change Voluntary Challenge Guide, June 2000.
- Emission Inventory Improvement Program (EIIP). Guidance for Emissions Inventory Development, 1999.
- US Environmental Protection Agency (EPA). Methane Emissions from the U.S. Petroleum Industry, Volumes 1-15, February 1999.
- Intergovernmental Panel on Climate Change (IPCC). Greenhouse Gas Inventory Reference Manual: IPCC Guidelines for National Greenhouse Gas Inventories, Volume 3, 1997.
- US Department of Energy (DOE). Instructions for Form EIA 1605 Voluntary Reporting of Greenhouse Gases, 1997.

The pilot version of the API Compendium underwent extensive review by industry and NGO organizations. The API Compendium was updated based on comments received on the pilot version, and a more detailed comparison study was conducted to identify and understand differences among various existing and newly developed emission estimation guidance documents. The following documents related to the petroleum refining sector were reviewed on a qualitative basis to examine differences between their emission estimation approaches and those provided in the API Compendium.

- Australian Greenhouse Office (AGO), Workbook for Fuel Combustion Activities (AGO a, 1999) and Workbook for Fugitive Fuel Emissions (Fuel Production, Transmission, Storage, and Distribution) (AGO b, 1999);

- Canadian Association of Petroleum Producers (CAPP), Calculating Greenhouse Gas Emissions (CAPP, 2003);
- Canadian Industrial Energy End-Use Data and Analysis Centre (CIEEDAC) memorandum on "Guide for the Consumption of Energy Survey" (CIEEDAC, 2000);
- Environmental Protection Agency (EPA), Emission Inventory Improvement Program (EIIP, 1999);
- European Environment Agency (EEA), EMEP/CORINAIR Emission Inventory Guidebook (EEA, 2002);
- Intergovernmental Panel on Climate Change (IPCC), Guidelines for National Greenhouse Gas Inventories (IPCC, 1997; UNECE/EMEP, 1999; IPCC, 2001);
- Regional Association of Oil and Natural Gas Companies in Latin America and the Caribbean (ARPEL), Atmospheric Emissions Inventories Methodologies in the Petroleum Industry (ARPEL, 1998);
- UK Emissions Trading Scheme (DEFRA, 2003); and
- World Resources Institute and World Business Council for Sustainable Development, The Greenhouse Gas Protocol (WRI/WBCSD, 2001) and calculation tools for Stationary and Mobile Combustion Sources (WRI/WBCSD, 2003).

As part of this discussion paper, other more recent methodologies were reviewed to compare against the API Compendium. These supplemental methods that were reviewed include:

- EU ETS Monitoring and Reporting Guidelines;
- Canadian Association of Petroleum Producers, Calculating Greenhouse Gas Emissions, April 2003; and
- Canadian Industrial End-Use Energy Data and Analysis Centre (CIEEDAC), Improved CO_2, CH_4, and N_2O Emission Factors for Producer-Consumed Fuels in Oil Refineries, March 2006.

7.0 Emissions Calculation Methods

7.1 Direct Emissions: Combustion Sources

7.1.1 General Combustion Source Method Considerations

The combustion of fuels used to provide energy is an important source of GHG emissions from a refinery. In order to account for emissions from combustion sources, a variety of calculation methods rely on the physical properties of fuel, properties of the equipment, emission factors, and manufacturer's data.

The combustion sources in a refinery typically utilize refinery fuel gas, natural gas, and LPG. Other fuels may also be used, but are likely less prevalent in California refineries due to stringent air quality compliance requirements. Table 7-1 provides default values for common fuel types. The values provided include density, higher heating value (HHV) or gross calorific value, lower heating value (LHV) or net calorific value, and the carbon content. The HHV is the amount of energy released when the fuel is completely combusted, including the heat of vaporization of water components in the fuel. The LHV is the combustion of the fuel only and does not include the heat of vaporization of water. In North America, the convention is to use HHV, whereas LHV is used outside North America and is referenced in the EU ETS.

The fuels listed in Table 7-1, with the exception of single component fuels such as propane, are mixtures of hydrocarbon species. As such, their chemical composition and heating value will vary depending on the specific blend of the fuel. The default emission factors are based on industry-wide average compositions. For fuels where the chemical composition does not vary significantly, use of these default values will result in a relatively accurate estimate of CO_2 emissions. To the extent that fuel composition is variable (e.g., refinery fuel gas and to a lesser extent natural gas), CO_2 emission estimates using default emission factors have the potential to be less accurate. Assuming that the source(s) is material on a relative and absolute emissions basis, the more variable the composition of a specific fuel (both temporally and geographically), the greater the need to base emissions estimates on fuel-specific rather than default emission factors.

Carbon dioxide, methane, and nitrous oxide are generated and emitted from combustion activities. Carbon dioxide is generated in the combustion reaction due to the oxidation of fuel hydrocarbons. Generally, a 100% conversion of fuel carbon to CO_2 is assumed, however there are published fractions of carbon oxidation based on fuel type intended to reflect incomplete combustion (see Section 7.2.1 below).

Table 7-1. Default Physical Property Data for Refinery Sector Fuels*

Fuel	Typical Density		Higher Heating Value		Lower Heating Value		Carbon, % by wt.
Aviation Gas			5.05×10^{6} Btu/bbl [d]	3.35×10^{10} J/m^3 [d]	4.80×10^{6} Btu/bbl	3.18×10^{10} J/m^3	
Butane (liquid)	4.84 lb/gal[a]	579.96 kg/m^3 [a]	4.09×10^{6} Btu/bbl[a]	2.71×10^{10} J/m^3 [a]	3.89×10^{6} Btu/bbl	2.58×10^{10} J/m^3	83.6[b]
Crude Oil	7.3 lb/gal[a]	874.73 kg/m^3 [a]	5.55×10^{6} - 6.40×10^{6} Btu/bbl[d]	3.85×10^{10} - 4.14×10^{10} J/m^3 [d]	5.27×10^{6} - 6.08×10^{6} Btu/bbl	3.50×10^{10} - 4.03×10^{10} J/m^3	83.7 - 86.1[e]
Diesel	7.1 lb/gal [a]	850.77 kg/m^3 [a]	5.75×10^{6} Btu/bbl [a]	3.82×10^{10} J/m^3 [a] 3.87×10^{10} J/m^3 [d]	5.46×10^{6} Btu/bbl	3.62×10^{10} J/m^3	
Distillate Oil	7.05 lb/gal [a]	844.78 kg/m^3 [a]	5.88×10^{6} Btu/bbl [a]	3.90×10^{10} J/m^3 [a]	5.59×10^{6} Btu/bbl	3.71×10^{10} J/m^3	#1: 86.6[b] #2: 87.3[b]
Ethane (liquid)			2.79×10^{6} Btu/bbl [d]	1.85×10^{10} J/m^3 [d]	2.65×10^{6} Btu/bbl	1.76×10^{10} J/m^3	
Fuel Oil #4	7.59 lb/gal [b]	909.48 kg/m^3 [b]	6.01×10^{6} Btu/bbl [b]	3.99×10^{10} J/m^3 [b]	5.71×10^{6} Btu/bbl	3.79×10^{10} J/m^3	86.4[b]
Gasoline	6.17 lb/gal [a]	739.33 kg/m^3 [a]	5.46×10^{6} Btu/bbl [a]	3.62×10^{10} J/m^3 [a] 3.47×10^{10} J/m^3 [d]	5.19×10^{6} Btu/bbl	3.44×10^{10} J/m^3	85.5[b]
Kerosene	6.76 lb/gal [b]	810.03 kg/m^3 [b]	5.67×10^{6} Btu/bbl [a]	3.71×10^{10} J/m^3 [a] 3.77×10^{10} J/m^3 [d]	5.39×10^{6} Btu/bbl	3.57×10^{10} J/m^3	
LPG	4.52 lb/gal [b]	541.62 kg/m^3 [b]	3.95×10^{6} Btu/bbl [a]	2.62×10^{10} J/m^3 [a]	3.75×10^{6} Btu/bbl	2.49×10^{10} J/m^3	
Naphtha	5.254 lb/gal [f]						83.08 wt% C [f]
Natural Gas (processed)	1 lb/23.8 ft^3 [c]	0.6730 kg/m^3 [c]	1,020 Btu/ft^3 [c] 1,004 Btu/ft^3 [d]	3.80×10^{7} J/m^3 [c] 3.74×10^{7} J/m^3 [d]	918 Btu/ft^3 903 Btu/ft^3	3.42×10^{7} J/m^3 3.37×10^{7} J/m^3	76 wt% C [c]
Petroleum Coke			12,690 Btu/lb[b]	2.95×10^{7} J/kg[b]	12,056 Btu/lb	2.80×10^{7} J/kg	85.0[b]
Propane (liquid)	4.24 lb/gal [a]	508.06 kg/m^3 [a]	3.80×10^{6} Btu/bbl [a]	2.52×10^{10} J/m^3 [a]	3.61×10^{6} Btu/bbl	2.40×10^{10} J/m^3	81.6[b]
Residual Oil #5	7.93 lb/gal [b]	950.22 kg/m^3 [b]	6.30×10^{6} Btu/bbl [b]	4.18×10^{10} J/m^3 [b]	5.99×10^{6} Btu/bbl	3.97×10^{10} J/m^3	88.7[b]
Residual Oil #6	8.45 lb/gal [b]	1012.53 kg/m^3 [b]	6.43×10^{6} Btu/bbl [b]	4.27×10^{10} J/m^3 [b]	6.11×10^{6} Btu/bbl	4.05×10^{10} J/m^3	88.3[b]

* Source: API Compendium update to reflect CAPP data.

To convert from HHV to LHV, the assumed conversion for gaseous fuels is LHV = (0.9) × (HHV); for solids or liquids the assumed conversion is LHV = (0.95) × (HHV).
Note that the values presented in this table are taken from multiple sources. As a result, the inherent fuel properties and assumptions associated with each fuel may differ.

Sources:
[a] EPA AP-42, Appendix A, *Miscellaneous Data Conversion Factors*, 1995.
[b] *North American Combustion Handbook*, Volume I: Combustion Fuels, Stoichiometry, Heat transfer, Fluid Flow, Third Edition, 1986.
[c] EPA AP-42, Section 1.4, *Natural Gas Combustion*, 1998.
[d] Canadian Association of Petroleum Producers (CAPP), *Calculating Greenhouse Gas Emissions*, Table 1-5, Canadian Association of Petroleum Producers, Publication Number 2003-03, April 2003.
[e] Baumeister, T., Avallone, E.A., and Baumeister III, T. *Marks' Standard Handbook for Mechanical Engineers*, Eighth Edition, Section 7, Table 9, McGraw-Hill Book Company, 1978.
[f] SANGEA™ Emissions Estimating System User's Guide, Version 3.0, Section 9.4, January 2003.

7.1.2 Stationary Combustion Estimation Methods

Carbon dioxide emissions from combustion sources are dependent on the carbon content of the fuel. As the most significant pollutant, the preferred approach for quantifying CO_2 emissions is based on fuel consumption and compositional analysis to provide the carbon content of the fuel. When this data is unavailable, emission factors, equipment related factors, and manufacturer data are alternative methods for estimating CO_2 emissions.

Methane emissions are a result of incomplete combustion of the fuel and depend on both the efficiency of the equipment and fuel type. The preferred approach is to utilize published emission factors that account for the fuel composition and efficiencies based on the equipment type.

Nitrous oxide emissions result from a series of reactions that are dependent on fuel type and the configuration of the equipment. The preferred approach for calculating N_2O emissions is similar to that of CH_4 and requires the use of emissions factors based on fuel type and equipment type.

Table 7-2 presents a summary of the methods, the accuracy rating, and relative level of materiality in a petroleum refinery. The materiality values presented reference the general discussion of GHG emissions sources from refining operations from Table 4-1.

7.1.2.1 Fuel-based Material Balance Approach for CO_2

Since CO_2 emissions are dependent on the carbon content of the fuel combusted, an accurate approach for quantifying emissions is based on a measurement of the fuel composition and the fuel consumption volume or mass. This approach uses an overall material balance approach for conversion of carbon in the fuel to CO_2 emissions. This approach is presented in the API Compendium as the preferred approach (API, Section 4.1, 2004), by the Registry (CCAR, GRP Section III.8.3), and by the EU ETS (EC, M&R Guidelines, Annex II, 2006) as the Tier 3 approach.

The GRP (Section III.8.3) also allows participants to quantify emissions from CEMS reports if a CEMS is used. The direct CO_2 measurement using CEMS data is also an accurate approach, as long as CO_2 is measured directly (and not indirectly estimated based on O_2 and CO measurements), has stringent QA procedures, and exhaust flow is accurately measured or quantified. For most CEMS applications in California, stringent quality assurance procedures are regulatory driven, ensuring a high accuracy of measurement data.

A general form of the material balance equation is provided below for gaseous fuels (e.g., natural gas). This equation is appropriate when the fuel usage in standard cubic feet (scf) and carbon content is known. For refineries, this data is typically available for refinery fuel gas combustion.

Table 7-2. Summary of Stationary Combustion Source Methodologies

Method	Applicable Pollutant	Data Required[a]	Accuracy Ranking			Source Materiality, % of total emissions
			API Compendium	IPIECA Guidelines[b]	EU ETS[c]	
CEMS direct measurement	▸ CO_2	▸ Direct measurement of CO_2 ▸ Measurement of exhaust gas flow rate	Not addressed	Not addressed	Allowed if demonstrated of higher accuracy than required tier.	~50% (refinery fuel gas combustion is typically the most significant contributor to stationary combustion emissions)
Fuel-based material balance	▸ CO_2	▸ Fuel consumption by fuel type ▸ Fuel composition by fuel type	Preferred approach	Tier A or Tier B (depending on sample frequency)	Tier 3	
Fuel-based emission factor and heating value	▸ CO_2	▸ Fuel consumption by fuel type ▸ Fuel heating value by fuel type	Alternate approach	Not addressed	Tier 2	
Fuel-based emission factor	▸ CO_2	▸ Fuel consumption by fuel type	Alternate approach	Tier C	Tier 1	
Equipment-based emission factor	▸ CH_4 ▸ N_2O	▸ Fuel consumption by fuel type and equipment type	Alternate approach	Not addressed	Not addressed	<1%
Manufacturer's data	▸ CH_4 ▸ N_2O	▸ Fuel consumption by fuel type and equipment type ▸ Manufacturer provided emission factor	Alternate approach	Not addressed	Not addressed	
Power/energy output	▸ CH_4 ▸ N_2O	▸ Power or energy output	Alternate approach	Not addressed	Not addressed	

[a] Data is required for other regulatory reporting purposes, except fuel composition and heating value.
[b] IPIECA Guideline tiers are ranked A to C, with A being the most accurate.
[c] EU ETS Monitoring and Reporting Guideline tiers are ranked 1 to 3, with 3 being the most accurate.

$$CO_2\ (\text{mt/yr}) = \left(\frac{\text{Fuel usage, scf}}{\text{year}}\right) \times \left(\frac{\text{lbmole}}{379.3\ \text{scf fuel}}\right) \times \left(\frac{\text{MW, lb fuel}}{\text{lbmole fuel}}\right) \times \left(\frac{\text{Fuel carbon content, lb C}}{\text{lb fuel}}\right)$$
$$\times \left(\frac{\text{lbmole C}}{12\ \text{lb C}}\right) \times \left(\frac{0.995\ \text{lbmole } CO_2 \text{ formed}}{\text{lbmole C combusted}}\right) \times \left(\frac{44\ \text{lb } CO_2}{\text{lbmole } CO_2}\right) \times \left(\frac{\text{tonne}}{2204.62\ \text{lb}}\right)$$

Equation 7-1

where:

scf = standard cubic feet of fuel at standard conditions of 1 atm. and 60°F;
MW = fuel molecular weight (lb/lbmole); and
0.995 lbmole CO_2/lbmol C reflects the carbon oxidation for gas fuels.

A general form of the material balance equation for liquid fuels (e.g., diesel or gasoline) is provided below. It is appropriate when the fuel usage in gallons, the fuel density, and carbon content are known.

$$CO_2\ (\text{mt/yr}) = \left(\frac{\text{Fuel usage, gal.}}{\text{year}}\right) \times \left(\frac{\text{Fuel density, lb}}{\text{gal.}}\right) \times \left(\frac{\text{Fuel carbon content, lb C}}{\text{lb fuel}}\right) \times \left(\frac{\text{lbmol C}}{12\ \text{lb C}}\right)$$
$$\times \left(\frac{1.0\ \text{lbmol } CO_2 \text{ formed}}{\text{lbmol C combusted}}\right) \times \left(\frac{44\ \text{lb } CO_2}{\text{lbmol } CO_2}\right) \times \left(\frac{\text{tonnes}}{2204.62\ \text{lb}}\right)$$

Equation 7-2

The above equations are consistent between Section 4.1 of the API Compendium, Section 2.2 of the WRI/WBCSD GHG Protocol stationary combustion guidance (WRI/WBCSD, 2005), Section 2.3.1.1 of Volume 2 of the 2006 IPCC Guidelines, and Section 10.3 of the EU ETS Monitoring and Reporting Guidelines (EC, 2006).

In order to use this methodology, the fuel flow and fuel composition (i.e., hydrocarbon analysis) need to be known. For refinery fuel gas, the most prevalent fuel combusted in a refinery, the variability of composition over time can be considerable due to crude oil and product mix variations. Sampling frequency of refinery fuel gas would need to be adequate to account for the variability in composition, in order to provide an accurate estimation of emissions. In the EU ETS Monitoring and Reporting Guidelines (EC, 2006) the minimum requirement for sampling frequency of refinery fuel gas is at least daily, using appropriate procedures at different parts of the day. If available, the EU ETS Guidelines requires evidence that the derived samples are representative and free of bias. The sampling procedures and frequency are designed to ensure that the annual average derived emission factor has a maximum uncertainty of less than one-third of the maximum uncertainty in the associated activity data based on the reporting tier.

The material balance approach conservatively assumes 100% oxidation of the fuel carbon to CO_2. While this is a conservative assumption for GHG estimation, an oxidation factor may be applied to account for incomplete combustion of the hydrocarbon constituents. Table 7-3 provides common oxidation factors (i.e., fraction of carbon converted to CO_2) for common fuel types from various published references.

Table 7-3. Oxidation Factor for Conversion of Carbon to CO_2 by Fuel Type

Fuel	Fraction of Carbon Fuel Oxidized			
	IPCC, 1996, Vol. 3, Table 1-6	**EIA, 2002, Table A3**	**EIIP, 1999, Vol. VIII, Pg. 1.4-17**	**EU ETS, 2004 M&R Guidelines, 2.1.1.1 (c)**
Petroleum Fuels[a]	0.99	0.99	0.99	0.99 (solid fuels) 0.995 (gas, liquid fuels)
Natural Gas	0.995	0.995	0.995	0.995
LPG		0.995		0.995
Still Gas		0.995		0.995
Flare Gas[b]		1		0.995

[a] IPCC labels this category as "Oil and Oil Products".

[b] The flare gas represents the hydrocarbon mixture being flared, not just the flare purge and/or pilot gas.

Sources:

Energy Information Administration (EIA). *Emissions of Greenhouse Gases in the United States 2001*, DOE/EIA-0573(2001), December 2002.

Emission Inventory Improvement Program (EIIP). *Guidance for Emissions Inventory Development*, Volume VIII: Estimating Greenhouse Gas Emissions, EIIP Greenhouse Gas Committee, October 1999.

Intergovernmental Panel on Climate Change (IPCC). *Greenhouse Gas Inventory Reference Manual: IPCC Guidelines for National Greenhouse Gas Inventories*, Volume 3, United Nations Environment Programme, the Organization for Economic Co-operation and Development, the International Energy Agency, and the Intergovernmental Panel on Climate Change, 1996.

European Commission, *Establishing Guidelines for the Monitoring and Reporting of Greenhouse Gas Emission Pursuant to Directive 2003/87/EC of the European Parliament and the Council*, 2006.

7.1.2.2 Fuel-based Emission Factor and Known Heating Value Approach for CO_2

Another method for calculating CO_2 when a fuel carbon analysis is unavailable is to use an emissions factor based on a standard amount of carbon in common fuel types. This methodology assumes a standard speciation of fuel and utilizes a measured quantity of fuel consumed and a measured HHV to calculate emissions. Table 7-4 (excerpt from the API Compendium) provides emissions factors based on a standard carbon analysis of common fuel types.

Table 7-4. Carbon Emission Factor for Common Fuel Types

Fuel	Carbon Emission Factor from Original Source Document		
	Emission Factor		Source
Aviation Gas	18.87	MMTC/10^{15} Btu	Table B1, EIA, 2002
Coke (Coke Oven/Gas Coke)	29.5	tonne C/10^{12} J (LHV)	Table 1-1, IPCC, 1996
Crude Oil	20.29	MMTC/10^{15} Btu	Table B1, EIA, 2002
Diesel/Gas Oil	20.2	tonne C/10^{12} J (LHV)	Table 1-1, IPCC, 1996
Distillate Fuel	19.95	MMTC/10^{15} Btu	Table B1, EIA, 2002
Ethanol	0.07	tonne CO_2/10^6 Btu	Texaco, 1999
Flexicoker Low Btu Gas	278	lb CO_2/10^6 Btu (LHV)	Petroleum Industry Data
Fuel Oil #4	45.8	lb C/10^6 Btu	Derived from fuel property data in Table 3-5
Jet Fuel	19.33	MMTC/10^{15} Btu	Table B1, EIA, 2002
Kerosene/Aviation Kerosene	19.72	MMTC/10^{15} Btu	Table B1, EIA, 2002
LPG	16.99	MMTC/10^{15} Btu	Table B1, EIA, 2002
Butane	17.75	MMTC/10^{15} Btu	Table B9, EIA, 2002
Ethane	16.25	MMTC/10^{15} Btu	Table B9, EIA, 2002
Propane	17.2	MMTC/10^{15} Btu	Table B9, EIA, 2002
Motor Gasoline (Petrol)	19.34	MMTC/10^{15} Btu	Table B1, EIA, 2002
Naphtha (<104°F)	40	lb C/10^6 Btu	Table 1.4-3, EIIP, 1999
Natural Gas (Flared)	14.92	MMTC/10^{15} Btu	Table B1, EIA, 2002
Other Oil (>104°F)	44	lb C/10^6 Btu	Table 1.4-3, EIIP, 1999
Pentanes Plus	40.2	lb C/10^6 Btu	Table 1.4-3, EIIP, 1999
Petroleum Coke	27.85	MMTC/10^{15} Btu	Table B1, EIA, 2002
Refinery Fuel Gas	139	lb CO_2/10^6 Btu (LHV)	Petroleum Industry Data
Residual Fuel	21.49	MMTC/10^{15} Btu	Table B1, EIA, 2002
Residual Oil #5	46.9	lb C/10^6 Btu	Derived from fuel property data in Table 3-5
Residual Oil #6	48.7	lb C/10^6 Btu	Derived from fuel property data in Table 3-5
Special Naphtha	43.8	lb C/10^6 Btu	Table 1.4-3, EIIP, 1999
Still Gas	38.6	lb C/10^6 Btu	Table 1.4-3, EIIP, 1999
Unfinished Oils	44.6	lb C/10^6 Btu	Table 1.4-3, EIIP, 1999

Sources:

Energy Information Administration (EIA). *Emissions of Greenhouse Gases in the United States 2001*, DOE/EIA-0573(2001), December 2002.

Emission Inventory Improvement Program (EIIP). *Guidance for Emissions Inventory Development*, Volume VIII: Estimating Greenhouse Gas Emissions, EIIP Greenhouse Gas Committee, October 1999.

Intergovernmental Panel on Climate Change (IPCC). *Greenhouse Gas Inventory Reference Manual: IPCC Guidelines for National Greenhouse Gas Inventories*, Volume 3, United Nations Environment Programme, the Organization for Economic Co-operation and Development, the International Energy Agency, and the Intergovernmental Panel on Climate Change, 1996.

Texaco Inc. *Establishing Texaco's Emission Inventory – A Guidance Document for Inventory Year 1998*, March 2, 1999.

The emission factors for carbon content are used to calculate the amount of CO_2 released on a heat input basis. The following equation shows how a CO_2 emissions factor on a heat input basis can be calculated using a carbon emissions factor from Table 7-4.

$$\text{lb CO}_2/10^6\,\text{Btu} = \left(\frac{\text{Emission Factor, lb C}}{10^6\ \text{Btu}}\right)\times\left(\frac{1\ \text{lb mole C}}{12\ \text{lb C}}\right)\times\left(\frac{1.0\ \text{lbmole CO}_2\ \text{formed}}{1.0\ \text{lbmole C combusted}}\right)\times\left(\frac{44\ \text{lb CO}_2}{\text{lbmole CO}_2}\right)$$

Equation 7-3

The following equation shows the general form of how the estimated CO_2 emissions factor is used with the higher heating value and quantity of fuel consumed to calculate emissions.

$$\text{CO}_2\ (\text{t/yr}) = \left(\frac{\text{EmissionFactor, lb CO}_2}{10^6\ \text{Btu}}\right)\times\left(\frac{\text{FuelConsumed, gal}}{\text{year}}\right)\times\left(\frac{\text{bbl fuel}}{42\,\text{gal}}\right)\times\left(\frac{\text{HHV, }10^6\ \textit{Btu}}{\text{bbl fuel}}\right)\times\left(\frac{\text{tonnes}}{2204.62\text{lb}}\right)$$

Equation 7-4

The form shown is for liquid fuels; however the calculation can be performed for any fuel type using the appropriate conversion factors. In this case, the higher heating value is a measured parameter providing more accuracy than using published heating values. Note that for some of the emission factors in Table 7-4 are based on lower heating value, which should be substituted in Equation 7-4 as appropriate. This methodology requires the measurement of the heating value of the fuel. Consideration should be given to the process and frequency of obtaining the heating value measurement(s).

7.1.2.3 Fuel-based Emission Factor Approach for CO_2

When both fuel speciation and heating value are not measured, published emissions factors can be used to quantify CO2 emissions. Table 7-5 presents a comparison of the published emission factors for common refinery fuels from different references. As shown, most of the published emission factors are in close agreement, and many are derived from the same source data (i.e., from those references presented in Table 7-4.

These emission factors can be used in conjunction with the standard heating values provided in Table 7-1 to calculate CO_2 emissions, when fuel heating value is not known. Of particular note, however, is the default emission factor for refinery fuel gas or still gas, which is representative of a U.S. average composition from U.S. refineries. As previously discussed in Section 3, the composition of refinery fuel gas in California refineries producing reformulated gasoline is anticipated to be much lower in hydrogen and higher in hydrocarbon constituents. Thus, this average value is not considered representative of refinery fuel gas in California refineries.

Table 7-5. Comparison of Stationary Combustion CO_2 Emission Factors (Higher Heating Value Basis)

Fuel	GRP[a]	API Compendium[b]	2006 IPCC[d]	WRI/ WBCSD[e]
Natural Gas, kg CO_2/MMBtu	53.05	53.06	53.3, 51.6-55.4	53.06 55, 50-62
Distillate Oil (Diesel), kg CO_2/MMBtu	73.15	73.15	74.3, 72.8-75.0	73.15 73, 70-77
LPG, kg CO_2/MMBtu	62.3	62.3	63.1, 61.6-65.6	Not Available
Motor Gasoline, kg CO_2/MMBtu	70.91	70.91	69.3, 67.5-73.0	70.91 70, 67-73
Petroleum Coke, kg CO_2/MMBtu	Not Available	102.1	97.5, 82.9-115.0	Not Available
Propane, kg CO_2/gal	5.70	6.42	Not Available	Not Available
Residual Fuel, kg CO_2/MMBtu	78.8	78.8	77.4, 75.5-78.8	Not Available
Still Gas, kg CO_2/MMBtu	64.2	64.2	57.6, 48.2-69.0	Not Available

Sources/Notes:
Emission factors were converted from units shown in original source documents to the units shown in the above table for comparison purposes.
[a] Table C.5 of GRP (CCAR, 2006). Oxidation factors have not been applied to the GRP factors. Original sources: EIA, 2001 and AP-42, fifth edition.
[b] Table 4-1 of API Compendium (2004). The propane emission factor was converted from a heat basis to a volumetric basis using the HHV provided in Table 3-5 of the Compendium (3.80 MMBtu/bbl). The "pipeline" natural gas emission factor shown. Original source for emission factors: EIA, 2002.
[d] Volume 2, Table 2.2 (Energy Industries), 2006 IPCC Guidelines. Original IPCC emission factors were provided on an LHV basis and were converted to an HHV basis assuming that the LHV for oil and natural gas are 5% and 10% lower than the HHV, respectively, according to guidance provided in Section 1.4.1.2 of Volume 2 of the 2006 IPCC Guidelines. IPCC provides a default and range of emission factors as shown above.
[e] WRI/WBCSD provides two emission factors: the top number is taken from Table 7 of Annex A of WRI/WBCSD's GHG Protocol guidance for stationary combustion; the bottom numbers are taken from WRI/WBCSD's companion spreadsheet tool, which provides a typical value and a range of emission factors as shown above.

7.1.2.4 CARB Proposed Approach for CO_2

The CARB proposed approach is based on the premise that refinery fuel composition can vary significantly on a relatively short time scale. As such, direct measurements of HHV and carbon content are essential to providing accurate CO_2 emissions estimates. To calculate a refinery fuel specific emissions factor, both fuel HHV and carbon content must be determined on a refinery fuel sample, consistent with the overarching methodologies provided in Section 7.1.2.1 above for the fuel-based material balance approach. Based on these measurements, a fuel based emission factor (mass CO_2/Btu) can be determined for a given fuel sample, which can then be used with routine

measurements of refinery fuel HHV to more accurately calculate CO_2 emissions. CARB proposes that the calculation can be done in the following manner:

Equation (1): $ECO_2 = HHV \times FR \times EF$

Equation (2): $ECO_2 = CF \times FR$

Where:

ECO_2	=	CO_2 emissions (mass CO_2/unit time)
FR	=	Fuel usage rate (scf/unit time)
EF	=	CO_2 emission factor (mass CO_2/Btu)
HHV	=	Fuel high heating value (Btu/scf)
CF	=	Fuel carbon content (mass C/mass fuel)

Setting equations (1) and (2) equal to each other, one can then solve for a fuel specific emission factor (EF) in the following manner:

Equation (3): $EF = CF/HHV$

The premise is that CF is derived from a daily fuel sample, and the HHV used in equation (3) is the corresponding higher heating value for that same daily fuel sample. Since both CF and HHV are measured values, the calculated EF is a fuel specific emission factor, based on a daily fuel sample. The daily EF is then used with hourly values of HHV using equation (1) to derive the CO_2 emissions on an hourly basis.

One observation is that equation (2) above is a simplification and should be replaced by equation 7-1 to derive CO_2 emissions, and thus equation (3) should be replaced by:

$$EF = \left(\frac{\text{Fuel carbon content, lb C}}{\text{lb fuel}}\right) \times \left(\frac{\text{scf}}{\text{HHV, Btul}}\right) \times \left(\frac{\text{lbmole}}{379.3\ \text{scf fuel}}\right) \times \left(\frac{\text{MW, lb fuel}}{\text{lbmole fuel}}\right) \times \left(\frac{1\ \text{lbmole CO}_2}{\text{lb mole C}}\right)$$
$$\times \left(\frac{\text{lbmole C}}{12\ \text{lb C}}\right) \times \left(\frac{44\ \text{lb CO}_2}{\text{lbmole CO}_2}\right) \times \left(\frac{\text{tonne}}{2204.62\ \text{lb}}\right)$$

This proposed approach would provide an accurate estimate of CO_2 emissions, as well as data to assess the variability of the refinery fuel gas composition over time. There may be alternative approaches that could be considered to provide an equivalent level of accuracy. Two potential scenarios for assessment of sampling frequency are:

- Refineries with continuous or semi-continuous measurements; and
- Refineries with manual sampling and analysis.

As previously discussed, many refineries have continuous HHV data using NDIR or GC measurement techniques. In this case, daily averages of HHV can likely be obtained from the refinery's process historian data system. If daily samples of carbon content and daily average HHV from continuous measurements are available, only one calculation per day is required (or averaged over a monthly period) to provide the same level of

accuracy as the CARB proposed approach. This not only simplifies the data reporting and management requirements for the refinery, but also streamlines the third party verification process. For verification purposes, however, the archived underlying data would need to be accessible to validate the averaged figures.

In some cases, semi-continuous carbon content data is also available for refineries that have an on-line GC. Therefore, daily averages of carbon content are also likely available for these refineries. With direct measurement of carbon content, the material balance approach can be used as indicated in Section 7.1.2.1. This would provide a more accurate estimate than a daily manual sample for carbon content and hourly HHV measurements.

For refineries that do not have continuous or semi-continuous measurements, the sample frequency is more of an issue. In general, the frequency of sampling should be based on:

- Materiality of refinery fuel gas combustion, especially when more than one fuel gas system is present;
- Variability of the composition of the refinery fuel gas over time; and
- Resource requirements for sampling, analysis, data archiving and management, reporting, and verification.

Some potential considerations when selecting an appropriate sampling frequency might include:

- Would the variability of HHV be greater from hour to hour within a 24 hour period than from day to day? Would daily sampling be representative of the expected variability over the course of a year?
- Statistically, is there justification for collecting and reporting samples at the proposed frequency? For normally distributed data that are randomly sampled (with no bias and samples are representative of the population), a sample size of 30-40 is optimal beyond which there are diminishing returns on improved accuracy. The important considerations are whether the proposed sampling frequency would provide data that are representative, thus reflecting data variability over the annual time period, and non-biased.

In all cases, the verifier would have the responsibility of assessing the appropriateness of the sampling frequency based on materiality of the source and variability of the composition.

7.1.2.5 Equipment-based Emission Factor Approach for CH_4 and N_2O

Methane and N_2O emissions are not only dependent on fuel type but also on the characteristics of the combustion equipment. Equipment-based emission factors are generally derived from AP-42 for both the API Compendium (Tables 4-4a and 4-5) and the 2006 IPCC Guidelines document (Volume 2, Table 2.7).

Table 7-6 presents a comparison of the API Compendium and 2006 IPCC equipment-specific emission factors for CH_4 and N_2O. The emission factors from IPCC are

provided on a lower heating value basis, and for purposes of comparison were converted to a higher heating value basis using IPCC's guidelines.

Table 7-6. Equipment-Specific Emission Factors for CH_4 and N_2O (tonnes/MMBtu, HHV)

Source	API Compendium[a]		2006 IPCC[c]	
	CH_4	N_2O	CH_4	N_2O
Natural Gas Boiler/Furnace/Heater	1.0E-06	9.8E-07 2.8E-07 (controlled)	9.5E-07	9.5E-07
Diesel Boiler	1.8E-07 [g]	Not Available	2.0E-07	4.0E-07
Natural Gas Engine, 2-cycle lean	6.6E-04	2.3E-06	6.58E-04	Not Available
Natural Gas Engine, 4-cycle lean	5.7E-04	1.4E-06	5.67E-04	Not Available
Natural Gas Engine, 4-cycle rich	1.0E-04	4.5E-07	1.04E-04	Not Available
Dual Fuel Engine	2.7E-04 (95%NG/5%DS)	Not Available	Not Available	Not Available
Gasoline Engine	1.37E-04[d]	9.0E-07[f]	Not Available	Not Available
Diesel Engine (<600 hp)	1.6E-05[d]	1.10E-05[f]	Not Available	Not Available
Diesel Engine (>600 hp)	3.7E-06[e]	2.21E-06[f]	4.0E-06	Not Available
Diesel Turbine	Not Available	Not Available	Not Available	Not Available
Gas Turbine	3.9E-06	1.4E-06 1.4E-05 (SCR)	3.8E-06 (> 3MW)	9.5E-07 (> 3MW)

Sources/Notes:
[a] Tables 4-4a and 4-5 of the API Compendium (2004). Refer to the Compendium for the original references.
[b] Tables 2-7 and 2-8 of INGAA (2005). Refer to the INGAA document for the original references.
[c] Volume 2, Table 2.7 (for "industrial sources"), 2006 IPCC Guidelines. IPCC's emission factors were taken from AP-42 and converted from an HHV basis to an LHV basis. They have been converted back to an HHV basis in the above table using the guidance from a footnote to IPCC's table that the net caloric heating value is 5% less than the gross value for coal and oil and 10% lower for natural gas.
[d] Converted original TOC (total organic carbon) emission factor to CH_4 basis assuming 10 wt. % CH_4 in the exhaust gas based on engineering judgment.
[e] Converted original TOC (total organic carbon) emission factor to CH_4 basis assuming 9 wt. % CH_4 in the exhaust gas based on AP-42.
[f] Converted from a tonnes/gal basis to a tonnes/MMBtu basis assuming a default gasoline HHV of 5.46 MMBtu/bbl and a default diesel HHV of 5.75 MMBtu/bbl provided in Table 3-5 of the Compendium (API, 2004).
[g] Converted from a tonnes/tonnes fuel basis to a tonnes/MMBtu basis assuming a default diesel density of 7.1 lb/gal and a HHV of 5.75 MMBtu/bbl provided in Table 3-5 of the Compendium (API, 2004).

To estimate CH_4 and N_2O, the only activity data required is the quantity of fuel consumed, by fuel type and by equipment type. In many cases, individual equipment sources are not metered and a fuel allocation approach may be used to support other air quality reporting programs. Since the materiality of CH_4 and N_2O from combustion sources is low, a rigorous approach for source allocation is likely not justified on the basis of GHG emissions reporting alone.

7.1.2.6 Manufacturer's Data-Based Approach

The Canadian Association of Petroleum Producers (CAPP), *Calculating Greenhouse Gas Emissions* document provides two tables of IC engine manufacturer specific emission factors, on a power output basis. Although IC engines may be used for gas compression in refineries, only the CO_2 emissions are significant in terms of total emissions from the facility. Since CO_2 emissions are not equipment specific, the use of equipment-specific emission factors is likely not warranted for refining operations.

7.1.2.7 Power/Energy Output-Based Approach

A final approach for calculating equipment based emissions is to use the known quantity of energy output to calculate emissions. The power input/output conversion factors in Table 7-7 allow for the estimation of fuel consumption if the output power of the equipment is known. This methodology uses the conversion factors in Table 7-7 and the default fuel-based emission factors in Table 7-5 of this Discussion -paper. The following equation shows the general form for calculating emissions using the power output-based approach.

$$CO_2\ (t/yr) = \left(\frac{\text{EmissionFactor, lb}\,CO_2}{10^6\ \text{Btu}}\right) \times \left(\text{PowerOutput, kW hr}\right) \times \left(\frac{\text{PowerInput, Btu}}{\text{PowerOutput, kW hr}}\right) \times \left(\frac{\text{tonnes}}{2204.62\text{lb}}\right)$$

Equation 7-5

This methodology is used for calculating CO_2 emissions when fuel consumption data is not tracked, but energy output is known. Most refineries track fuel consumption for major combustion sources, or total fuel consumption, and the use of output conversions is not anticipated to be an important consideration.

Table 7-7. Power Output to Energy Input Conversions

Fuel/Service	Original Units, Btu/kW-hr	Converted to HHV basis, Btu/hp-hr
No. 2 Fuel Oil / Combined Cycle Turbine	12,420	9,262
No. 2 Fuel Oil / Gas Turbine	14,085	10,503
No. 2 Fuel Oil / Internal Combustion Engine	10,847	8,089
No. 2 Fuel Oil / Steam Turbine (Boiler)	8,653	6,453
Gasoline / Industrial Engine[a]	9,387 (converted)	7,000 (original units)
Natural Gas / Combined Heat and Power [b]	5,000 - 6,000	3,729 - 4,474
Natural Gas / Combined Cycle Steam Turbine with Supplemental Firing	10,229	7,628
Natural Gas / Combined Cycle Single Shaft	8,952	6,676
Natural Gas / Combined Cycle Combustion Turbine	11,648	8,686
Natural Gas / Gas Turbine	13,918	10,379
Natural Gas / Internal Combustion Engine	10,538	7,858

Natural Gas / Steam Turbine (Boiler)	10,502	7,831
Liquefied Propane Gas / Gas Turbine	13,503	10,069
Liquefied Propane Gas / Steam Turbine (Boiler)	14,200	10,589

Sources:
EIIP, *Guidance for Emissions Inventory Development*, Volume VIII: Estimating Greenhouse Gas Emissions, EIIP Greenhouse Gas Committee, October 1999.
[a] EPA, AP-42, Supplements A, B, and C, Table 3.3-1, October 1996.
[b] Assumed output to input energy conversion based on industry best practice.

7.1.3 Allocating Emissions from Combined Heat and Power

Cogeneration processes generate electricity and thermal energy to be used by the facility itself and can be transferred, sold, or used by another entity. Since the energy from cogeneration facilities can be supplied to multiple users, there are methodologies that allocate the total emissions resulting from combustion to the corresponding energy output streams. There are a number of approaches to allocate emissions from cogeneration operations, varying in complexity and data requirements. All approaches are based on allocating emissions from total direct combustion emissions from cogeneration. The methodologies have been developed by the UK Emissions Trading Scheme, WRI/WBCSD GHG Protocol Initiative, California Climate Action Registry, and the California Public Utilities Commission.

7.1.3.1 Efficiency Allocation Approach - UK Emissions Trading Scheme

The UK trading scheme approach assumes that the efficiency of thermal energy generation is twice that of electricity generation. The first step in this approach is to determine the total CO_2 emissions from the combustion of fuel at the plant using an appropriate approach from Section 7.1.2 of this document. The second step is to determine the total electricity and thermal energy output generated. Steam tables are used to determine thermal energy output in British Thermal Units (BTUs). The third step is to convert the thermal energy output from BTUs to megawatt hour (MWh) equivalent. The fourth step is to calculate the electricity and steam emission factors using Equations 7-6 and 7-7 below. The final step is to apply these emission factors to the thermal energy and electricity generated. The UK approach requires facilities to allocate emissions between onsite use which is considered direct emissions and the exported quantities which are considered indirect sources of emissions. However, California may not allocate emissions this way for the purposes of mandatory reporting.

<u>Electricity Emission Factor from Cogeneration Facility:</u>

$$\frac{CO_2 \text{ EF from electricity}}{(\text{lb } CO_2/\text{megawatt-hr})} = \frac{2 \times CO_2 \text{ direct emissions (tonnes } CO_2)}{[2 \times \text{Electricity produced (megawatt-hr)}] + \text{Steam produced (megawatt-hr)}}$$

Equation 7-6

Steam Emission Factor from Cogeneration Facility:

$$\frac{CO_2 \text{ EF from steam}}{(\text{lb } CO_2/\text{megawatt-hr})} = \frac{CO_2 \text{ direct emissions (tonnes } CO_2)}{[2 \times \text{Electricity produced (megawatt-hr)}] + \text{Steam produced (megawatt-hr)}}$$

Equation 7-7

7.1.3.2 Efficiency Allocation Approach – CCAR and WRI/WBCSD

The WRI/WBCSD and Registry present a modified approach using the actual efficiency of thermal and electricity outputs. The first step in determining the emissions from a thermal energy and power cogeneration facility is to account for the direct emissions from the fuel combusted using methods in section 7.1.2. In order to determine the emissions being allocated to the production of thermal energy and power, the total amount of thermal energy and power produced must be individually accounted for. The electric output is converted to the same units (BTUs) as the thermal energy output. The second step is to estimate the efficiencies of steam and electricity production. The approach recommends using actual efficiencies if they are available. If actual efficiencies are unavailable, a value of 35% is assumed for electricity production and a value of 80% is assumed for thermal energy production. The third step estimates the fraction of total emissions allocated to steam and electricity. Emissions from thermal energy production are first estimated using Equation 7-8. After the emissions from heat have been determined, the emissions from electricity are calculated using Equation 7-9. Step 4 calculates emission rates for steam and electricity production by dividing the emissions from thermal energy production by the total amount of steam produced to get an emission rate, and repeating this emission rate calculation for electricity. In the WRI/WBCSD approach, the fifth step is to estimate emissions from energy purchases or sales by using the emission rate multiplied by the amount of energy purchased or sold. The CCAR does not specify this last step, and California is not proposing to allocate CHP emissions using this approach.

$$E_H = E_T \times \frac{\frac{H}{e_H}}{\left(\frac{H}{e_H} + \frac{P}{e_P}\right)}$$

Equation 7-8

and

$$E_P = E_T - E_H$$

Equation 7-9

where:

E_T = Total direct emissions from CHP plant

E_H = Emissions allocated to steam (or heat) production
E_P = Emissions allocated to electricity production
e_H = Actual efficiency of steam (or heat) production
e_P = Actual efficiency of electricity production

7.1.3.3 Energy Content Approach – WRI/WBSCD

The energy content approach apportions GHG emissions based on the energy content of the thermal energy and electricity produced. This method is particularly useful when the thermal energy stream is used for process heat. The first step in this method is to determine the direct emissions from fuel combustion. The second step is to calculate the energy content for each energy stream. For the electricity stream, the energy content is equivalent to the energy output. The energy content of the steam is equivalent to the energy content of the output stream minus any energy in the returned condensate, calculated using equation 7-10 shown below:

$$Energy = F_i \left(h_i - h_{ref} \right) \qquad \text{Equation 7-10}$$

F_i = Mass of the steam in tonnes
h_i = Specific enthalpy of steam flow i, kJ/kg
h_{ref} = Specific enthalpy at reference conditions (corresponding to returned condensate, assume at 100˚C and 1 atm pressure)

Step 3 in this process is to sum all of the energy in the streams, and step 4 is determine the fraction of the total emissions to allocate to each energy stream by dividing the individual energy content by the total. Step 5 uses this ratio to determine the amount of emissions from heat and electricity production by multiplying the respective fraction by the total emissions. Step 6 calculates an emission rate for steam and electricity production by dividing the total emission from each stream by the total amount of steam or electricity. Step 7 estimates emissions from purchases or sales by using the emission rate multiplied by the amount of energy purchased or sold.

7.1.3.4 Work Potential Allocation Approach – WRI/WBCSD

This methodology provides an approach that allocates emissions based on the work potential of the energy streams generated. This method uses the enthalpy and entropy of the thermal energy streams to calculate the respective potential work. For electricity generation, the energy output of the stream is equal to the work potential of the stream.

The first step is to calculate the direct emissions from fuel combustion. The second step is to calculate the potential work of each energy stream. For electricity, the wok potential is equal to energy output. For steam, the work potential is calculated using Equation 7-11, from the specific enthalpy and specific entropy. Selection of reference conditions are arbitrary and could correspond to the return condensate or make up water temperature. The third step is to sum the total work potential from thermal and electricity streams.

The fourth step is to determine the fraction of total emissions allocated to each energy stream by dividing the work potentials of each stream by the total work potential. The fifth step is to allocate the total emissions of the CHP facility to the individual stream in proportion to their work potential. The sixth step is to calculate the emission rates for steam and electricity production by dividing the total emissions from each stream by the total amount of steam or electricity to get an emission rate. The last step is to estimate emissions from purchases or sales of steam or electricity.

$$W_i = F_i \times \left[(h_i - T_{ref} \times S_i) - (h_{ref} - T_{ref} \times S_{ref})\right] \qquad \text{Equation 7-11}$$

where:

- Wi = Work potential of stream I (kJ)
- Fi = Mass of steam (kg)
- h_i = Specific enthalpy of steam flow i (kJ/kg)
- h_{ref} = Specific enthalpy at reference conditions (kJ/kg)
- T_{ref} = Reference temperature (˚K)
- S_i = Specific entropy of steam flow i (kJ/kg-˚K)
- S_{ref} = Specific entropy at reference conditions (kJ/kg-˚K)

7.1.3.5 PUC Conversion Approach

The first step in determining the emissions from a thermal energy and power cogeneration facility is to account for the direct emissions from the fuel combusted using methods in section 7.1.2. In order to determine the emissions being allocated to the production of thermal energy and power, the total thermal energy and electricity outputs are determined. The second step is to convert the thermal energy output from BTUs to kWh equivalent using the standard engineering conversion factor of 3412 Btu per kWh. The third step estimates an emission rate from producing electricity using Equation 7-12. The emission rate for electricity is multiplied by the total electricity generated to get emissions associated with electricity. After the emissions from electricity have been determined, the emissions from thermal energy are calculated using Equation 7-13.

$$\text{Emissions Rate (electricity)} = \frac{\text{Total GHG Emissions}}{\text{Electricity (kWh)} + \text{Usable Thermal Energy (kWh)}} \qquad \text{Equation 7-12}$$

$$\text{Emissions}_{\text{Heat}} = \text{Emissions}_{\text{Total}} - \text{Emissions}_{\text{Electricity}} \qquad \text{Equation 7-13}$$

7.1.4 Flaring Estimation Methods

Flares are used in refineries to oxidize hydrocarbons or other constituents during process upsets, emergency events, and plant maintenance/turnaround events. Larger flares at a refinery will likely have metered gas flow rates, but some smaller flares may not have a flow meter. Refinery flares are designed with a purge gas stream to ensure sufficient flow to prevent flash-back, and a continuous pilot.

Flare combustion efficiency is difficult to measure and default efficiencies have been established based on experimental test data. In addition to difficulties in estimating combustion efficiency, flare gas composition is often unknown and may need to be estimated based on engineering judgment or estimated using generic factors. Due to the limitations in data availability, there are several methodologies for estimating emissions from flares. The Registry General Reporting Protocol does not specifically address flaring.

The preferred approach for estimating emissions from flares presented in the API Compendium is to use manufacturer's data or test data-derived emission factors and the measured fuel consumption. This information may be available for some flares in a refinery, but not all. In the absence of manufacturer's data, flare gas flow and composition data is used in a material balance approach similar to Equation 7-1.

Table 7-8 presents a summary of the methods, the accuracy rating, and relative level of materiality for flaring sources in a petroleum refinery. The materiality values presented reference the general discussion of GHG emissions sources from refining operations from Table 4-1.

Table 7-8. Summary of Flaring Estimation Methodologies

Method	Applicable Pollutant	Data Required	Accuracy Ranking			Source Materiality, % of total emissions
			API Compendium	IPIECA Guidelines[a]	EU ETS[b]	
Test data	▸ CO_2 ▸ CH_4	▸ Test or vendor data	Preferred approach	Not addressed	Not addressed	~3%
Fuel-based material balance	▸ CO_2	▸ Flare gas consumption ▸ Flare gas composition	Alternate approach	Tier A	Tier 3	
Fuel-based composition	▸ CH_4	▸ Flare gas consumption ▸ Flare gas composition	Preferred approach	Not addressed	Not addressed	
Engineering estimates	▸ CO_2 ▸ CH_4	▸ Flare rate estimate ▸ Flare composition estimate	Alternate approach	Tier C	Not addressed	
Default factors	▸ CH_4	▸ Refinery feed rate	Alternate approach	Not addressed	Not addressed	

[a] IPIECA Guideline tiers are ranked A to C, with A being the most accurate.
[b] EU ETS Monitoring and Reporting Guideline tiers are ranked 1 to 3, with 3 being the most accurate.

7.1.4.1 Material Balance Approach using Flare Gas Volume and Composition

A material balance can be performed to calculate emissions if the fuel consumption and composition data are known. The following equation shows how the metered fuel flow, composition, combustion efficiency, and physical properties are used to calculate emissions.

$$CO_2 \text{ Emissions} = \text{Volume Flared} \times \text{Molar volume} \times \text{MW } CO_2 \times \left[\sum \left(\frac{\text{mole Hydrocarbon}}{\text{mole gas}} \times \frac{\text{X mole C}}{\text{mole Hydrocarbon}} \right) \times \text{Combustion efficiency} \left(\frac{\text{mole } CO_2 \text{ formed}}{\text{mole C combusted}} \right) \right]$$

Equation 7-14

Default combustion efficiencies for flares vary by reference as follows:

- API Compendium uses 98% combustion efficiency. This combustion efficiency is based on early studies performed by the Chemical Manufacturing Association (CMA) and EPA in the 1980s.
- EU ETS Monitoring and Reporting Guidelines specifies 99.5 % combustion efficiency for flares.

Methane emissions from flaring result from incomplete combustion of methane in the flare gas stream. For a well designed and operated flare as is found in petroleum refineries, the fraction of non-combusted methane from flaring is generally assumed to be 0.5% (API, 2004). The estimation of non-combusted methane from flaring is shown below.

$$CH_4 \text{ Emissions} = \text{Volume Flared} \times CH_4 \text{ Mole fraction} \times \% \text{ residual } CH_4 \times \text{Molar volume} \times \text{MW } CH_4$$

Equation 7-15

If the flare flow rate is unknown, an overall process energy balance can be used to estimate the hydrocarbon losses to the flare. In most refineries, the site energy coordinator monitors the overall efficiency of operations, including the losses from flaring. The data and approach used to monitor flared losses for energy management purposes can be used for quantifying GHG emissions from flaring.

If the flare composition is not measured, engineering judgment based on process operations can be used to approximate heating value or composition. One such scenario is when excess fuel gas is flared at the refinery and the fuel composition is known.

Another example of using operational data to estimate flare gas composition is by measuring the process vent rates that are routed to the flare. If the process vent is metered and composition of the vent gas readily estimated, GHG emissions can be calculated by summing all process vent streams routed to the flare. While this approach is data intensive, some local regulations such as by the Bay Area Air Quality Management District requires monitoring of process unit vents routed to the flare making this approach an extension of existing reporting requirements. For example, in the Bay Area District, the composition and volume of gas flared must be reported.

7.1.4.2 Default Emission Factor-Based Approach

Default emission factors can be used when both flare gas consumption and composition are unknown. Table 7-9 presents the refinery flaring emission factor for methane emissions as indicated in the API Compendium. The emission factor is based on total barrels of refinery feed, and accounts for all flaring at a given refinery. Note that CO_2 and N_2O emission factors for flaring are not readily available for refinery flaring. N_2O emissions from flaring sources at a refinery are anticipated to be negligible.

Table 7-9. GHG Emission Factors for Refinery Flaring

Flare Source	Emission Factors			Units
	CO_2	CH_4	N_2O	
Flaring - Refining[a,b]	No data	3.62E-06	No data	tonnes/1000 bbl refinery feed

[a]U.S. Environmental Protection Agency (EPA). *Inventory of U.S. Greenhouse Gas Emissions and Sinks: 1990-2001*. EPA-430-R-03-004, U.S. Environmental Protection Agency, Washington D.C., April 15, 2003, Annex H, Table H-3.
[b]CH_4 emission factors converted from scf or m^3 are based on 60°F and 14.7 psia.

7.1.5 Mobile Source Estimation Methods

Mobile source emissions include company fleet vehicles, rail cars, tanker trucks, ships, and barges used to transport personnel and products involved in the refinery process. The emissions from mobile sources are driven by fuel type and consumption.

Table 7-10 presents a summary of the methods, the accuracy rating, and relative level of materiality for mobile sources associated with a petroleum refinery. The materiality values presented reference the general discussion of GHG emissions sources from refining operations from Table 4-1.

7.1.5.1 Fuel-Based Approach

The fuel-based approach for mobile sources is the same as the approach for stationary sources discussed above, and is the preferred approach in the API Compendium. If the

Table 7-10. Summary of Mobile Source GHG Estimation Methodologies

Method	Applicable Pollutant	Data Required	Accuracy Ranking			Source Materiality, % of total emissions
			API Compendium	IPIECA Guidelines[a]	EU ETS[b]	
Fuel-based material balance	▸ CO_2	▸ Fuel consumption ▸ Fuel composition	Preferred approach	Not addressed	Not addressed	Very low
Default emission factor	▸ CO_2 ▸ CH_4 ▸ N_2O	▸ Fuel consumption	Alternate approach	Not addressed	Not addressed	
Distance-based approach	▸ CO_2 ▸ CH_4	▸ Distance traveled	Alternate approach	Not addressed	Not addressed	

[a] IPIECA Guideline tiers are ranked A to C, with A being the most accurate.
[b] EU ETS Monitoring and Reporting Guideline tiers are ranked 1 to 3, with 3 being the most accurate.

fuel consumption, heating value, and fuel composition are known the material balance equations 7-1 and 7-2 presented in this document can be used to calculate emissions. If only the fuel consumption and heating value are known, equations 7-3 and 7-4 can be used with the carbon speciation data in Table 7-4 to calculate emissions.

When only the fuel consumption is known, default emission factors for standard quality fuels can be used. For CO_2 emissions, these are the same factors as used for stationary combustion (see Table 7-5 for comparison).

Default emission factors for CH_4 and N_2O are provided in Table 7-11 from both IPCC's 2006 Guidelines (Volume 2, Table 3.2.2) and API Compendium (Table 4-9). IPCC factors are fuel specific but not vehicle specific, whereas API Compendium factors are both fuel and vehicle specific. The IPCC emission factors were converted from a heat basis to a volumetric basis using default lower heating value by fuel type.

Table 7-11. Comparison of CH_4 and N_2O Mobile Source Combustion Emission Factors – Fuel Use Basis (tonnes/1000 gallons)

Source	API Compendium[a]		2006 IPCC [b, c]	
	CH_4	N_2O	CH_4	N_2O
Gasoline Fuel				
Motor Gasoline – Uncontrolled			4.3E-03, 1.3E-03 – 1.43E-02	4.2E-04, 1.3E-04 – 1.4E-03
Motor Gasoline – Oxidation Cat.			3.3E-03, 9.8E-04 – 1.12E-2	1.0E-03, 3.4E-04 – 3.1E-03
Light-Duty Gasoline Automobiles (LDGA)			5.0E-04, 1.4E-04 – 1.7E-03 (low mileage, 1995 and later)	7.4E-04, 2.5E-04 – 2.2E-03 (low mileage, 1995 and later)
Tier 1, Three-way catalyst	4.5E-04	9.8E-04		
Tier 0, New Three-way catalyst	1.2E-03	9.5E-04		
Tier 0, Aged Three-way catalyst	1.2E-03	2.2E-03		
Oxidation Catalyst	1.6E-03	7.6E-04		
Non-Catalyst	2.0E-03	1.1E-04		
Light-Duty Gasoline Trucks (LDGT)				
Tier 1, Three-way Catalyst	8.3E-04	1.6E-03		
Tier 0, New Three-way Catalyst	1.6E-03	1.7E-03		
Tier 0, Aged Three-way Catalyst	1.6E-03	3.8E-03		
Oxidation Catalyst	1.7E-03	7.6E-04		
Non-Catalyst	2.1E-03	1.1E-04		
Heavy-Duty Gasoline Vehicles (HDGV)				
Three-way Catalyst	6.4E-04	3.8E-03		
Non-Catalyst	1.1E-03	1.7E-04		
Uncontrolled	1.9E-03	3.0E-04		
Diesel Fuel			5.3E-04, 2.2E-04 – 1.3E-03	5.3E-04, 1.8E-04 – 1.6E-03
Light-Duty Diesel Automobiles (LDDA)				
Advance Control	1.9E-04	7.6E-04		
Moderate Control	2.6E-04	7.6E-04		
Uncontrolled	3.8E-04	7.6E-04		
Light-Duty Diesel Trucks (LDDT)				

Source	API Compendium[a]		2006 IPCC [b, c]	
	CH_4	N_2O	CH_4	N_2O
Advance Control	2.6E-04	7.6E-04		
Moderate Control	2.6E-04	7.6E-04		
Uncontrolled	3.0E-04	7.6E-04		
Heavy-Duty Diesel Vehicles (HDDV) Advance Control	4.5E-04	3.0E-04		
Moderate Control	4.9E-04	3.0E-04		
Uncontrolled	5.7E-04	3.0E-04		
Natural Gas Vehicles	8.3E-05	2.3E-07	92, 50 – 1540 kg/TJ (LHV)	3, 1 – 77 kg/TJ (LHV)
Propane Vehicles	2.0E-03	1.1E-04		

Sources/Notes:
[a] Table 4-9 of the API Compendium (2004). Original source for emission factors: Environment Canada, 2003.
[b] Volume 2, Table 3.2.2 of the 2006 IPCC Guidelines. A default emission factor and lower/upper limits are provided.
[c] Converted IPCC emission factors from a kg/TJ (LHV) basis to a tonnes/1000 gallons basis assuming default LHVs taken from Table 3-5 of the Compendium (API, 2004), which are: 5.19 MMBtu/bbl for gasoline and 5.46 MMBtu/bbl for diesel..

7.1.5.2 Distance-Based Approach

An alternative approach to calculate emissions when fuel consumption is unknown is to estimate fuel consumption based on distance traveled. Tables 4-10 and 4-11 of the API Compendium show published fuel economy factors for common mobile sources (API, 2004). Table 4 of the WRI/WBCSD guidance also provides default fuel economy (mpg) data and CO_2 emission factors based on vehicle kilometers. Estimated fuel consumption can then be used in conjunction with fuel-based default CO_2 emission factors to quantify emissions. A companion spreadsheet to estimate mobile source CO_2 emissions is also provided on WRI/WBCSD's GHG Protocol Initiative web page.

Table 7-12 shows CH_4 and N_2O emission factors from the Registry General Reporting Protocol and 2006 IPCC Guidelines that can be used with fuel consumption from mobile sources. The IPCC Guidelines also provide emission factors for cold starts.

Table 7-12. Comparison of CH_4 and N_2O Mobile Source Combustion Emission Factors – Distance Basis

Source	GRP[a,d]		IPCC[c]			
			CH_4		N_2O	
	CH_4 (g/mile)	N_2O (g/mile)	Running (g/mile)	Cold Start [e] (mg/startup)	Running (g/mile)	Cold Start [e] (mg/startup)
Light Duty Gasoline Automobile (Uncontrolled)	0.05	0.04	0.163	62	0.013	28
- Low Emission Vehicle	(1994-1999)	(1994-1999)	0.0097	32	0	90
- Advanced Three-Way Catalyst			0.011	55	0.014	113
- Early Three-Way Catalyst	0.04	0.04	0.063	34	0.042	92
- Oxidation Catalyst	(2000-)	(2000-)	0.13	9	0.032	72
- Non-oxidation Catalyst			0.15	59	0.013	28
Gasoline Light Duty Truck (Uncontrolled)	0.06	0.06	0.187	71	0.014	32

Source	GRP[a,d]		IPCC[c]			
			CH_4		N_2O	
	CH_4 (g/mile)	N_2O (g/mile)	Running (g/mile)	Cold Start [e] (mg/startup)	Running (g/mile)	Cold Start [e] (mg/startup)
- Low Emission Vehicle	(1994-1999)	(1994-1999)	0.011	46	0.0016	59
- Advanced Three-Way Catalyst			0.023	82	0.040	200
- Early Three-Way Catalyst	0.05	0.06	0.063	72	0.069	153
- Oxidation Catalyst	(2000-)	(2000-)	0.13	99	0.042	93
- Non-oxidation Catalyst			0.175	67	0.014	32
Gasoline Heavy Duty Vehicle (Uncontrolled)	0.12	0.20	0.423	162	0.034	74
- Low Emission Vehicle	(1990-)	(1990-)	0.023	94	0.0016	120
- Advanced Three-Way Catalyst			0.024	163	0.084	409
- Early Three-Way Catalyst			0.195	183	0.14	313
- Oxidation Catalyst			0.179	215	0.089	194
- Non-oxidation Catalyst			0.385	147	0.032	70
- EPA Tier 1						
Diesel Light Duty Automobile (Uncontrolled)	0.01	0.02	0.0016	-3	0.0016	-1
- Advanced Control	(all model	(all model	0.0016	-3	0.0016	0
- Moderate Control	years)	years)	0.0016	-3	0.0016	0
Diesel Light Duty Truck (Uncontrolled)	0.01	0.03	0.0016	-4	0.0016	-1
- Advanced Control	(all model	(all model	0.0016	-4	0.0016	-1
- Moderate Control	years)	years)	0.0016	-4	0.0016	-1
Diesel Heavy Duty Vehicle (Uncontrolled)	0.06	0.05	0.0064	-11	0.0048	-2
- Advanced Control	(1996-)	(1996-)	0.0064	-11	0.0048	-2
Gasoline Motorcycles (Uncontrolled)	0.09	0.01	0.085	33	0.0064	15
- Non-catalyst Controls	(1996-)	(1996-)	0.064	24	0.0048	12
CNG Light Duty Vehicle	0.04	0.04	0.346-1.17	Not Given	0.043-0.11	Not Given
LPG Light Duty Vehicle	0.04	0.04	0.039	Not Given	0.008	Not Given
CNG Heavy Duty Vehicle/Truck	3.48	0.05	9.629	Not Given	0.30	Not Given
LNG Heavy Duty Vehicle/Truck	3.48	0.05	6.857	Not Given	0.44	Not Given
LPG Heavy Duty Vehicle	Not Given	Not Given	0.11	Not Given	0.15	Not Given

Sources/Notes:
[a] Table C.4 of GRP (CCAR, 2006). Emission factors derived from California Energy Commissions, 2002.
[c] Volume 2, Tables 3.2.3 and 3.2.4 of the 2006 IPCC Guidelines. Emission factors for "Running (hot)" mode converted from mg/km basis to g/mile basis. Original source for emission factors: EPA, 2004. Negative emission factors indicate that a vehicle starting cold produces fewer emissions than a vehicle starting warm or running warming.
[d] The GRP provides mobile source emission factors by model year rather than by emissions control technology. Several model years are provided in Table C.4 of the GRP, but the most recent model years are provided in the table above.
[e] Negative emission factors indicate that a vehicle starting cold produces fewer emissions than a vehicle starting warm or running warm.

7.1.6 Combustion Source Method Evaluation

The most significant combustion emission contribution in a typical refinery is CO_2 emissions from refinery fuel gas combustion. In most cases, refinery fuel gas consumption is measured and composition is also available through routine sample

collection and analysis. The frequency of sampling refinery fuel gas should be aligned with the variability in composition over time. Typically, the composition of refinery fuel gas can vary substantively within a given refinery, depending on the variability in crude oil supply and product mix. Refinery fuel gas default emission factors for CO_2 are not considered representative for refinery operations in California where reformulated gasoline is produced, due to differences in refinery fuel gas composition (e.g., low H_2, high C_{2+}).

For other fuels used in a refinery, such as natural gas, LPG, and distillate oil, default emission factors may be considered more appropriate than for refinery fuel gas for two reasons. First, the relative contribution of the combustion of other fuels to the overall emissions from the refinery is less significant than from refinery fuel gas. As such, the uncertainty associated with the emission factors for other fuels will have less impact on overall accuracy of the inventory. Secondly, these fuels are generally more representative of product grade fuels that have more standardized compositional and heating value specifications.

Methods used for quantifying CH_4 and N_2O from combustion sources are based on default emission factors, with the exception of flares. The emission factors for CH_4 and N_2O are equipment specific. While these factors have inherent uncertainty, the contribution of CH_4 and N_2O from combustion sources to the overall facility inventory is relatively insignificant. For some refinery fuel gas combustion sources, individual source fuel flow meters are not available. However, since CH_4 and N_2O emissions from combustion sources are not material, the allocation of fuel consumption to individual combustion sources is not an important factor in the accuracy of the GHG emissions inventory from a refinery.

CH_4 emissions from flares are based on the methane content of the fuel and a published methane oxidation factor (also referred to as methane destruction efficiency).

Table 7-13 presents a summary of the different methodologies that are outlined in the API Compendium, IPIECA Guidelines, IPCC, EU ETS and other references. These methodologies are generally consistent with the Registry General Reporting Protocol. As shown, the data requirements, advantages, and disadvantages of the methodologies are presented. In general, the accuracy of the methodology chosen should be relative to the materiality of the combustion source type in a refinery. Factors that influence the methodologies selected for the combustion sources in a refinery include:

- Relative level of accuracy in relation to the materiality of source type in typical refinery;
- Data collection requirements; and
- Data availability issues.

Although specific recommendations for the appropriate selection of methodologies are not provided in this discussion paper, the general focus of should be on driving accuracy for the following combustion source types:

Table 7-13. Summary and Analysis of Combustion Source Methods

Method	Data Required	Advantages	Disadvantages
Stationary Combustion			
Fuel based material balance approach	▸ Volume of fuel combusted ▸ Fuel compositional analyses	▸ Good accuracy for CO_2 emissions when based on actual fuel carbon content ▸ Refinery fuel gas compositional data generally available	▸ Requires sample frequency for fuel gas commensurate with variability in composition ▸ Doesn't account for impact of equipment characteristics on CH_4 and N_2O emissions
Fuel-based heating value approach	▸ Volume of fuel combusted ▸ Measured heating value	▸ More accurate than simple default emission factor approach	▸ Default factors rely on assumed gas carbon content
Fuel based emission factor approach	▸ Volume of fuel combusted	▸ Only requires fuel consumption data	▸ Default factors rely on assumed gas carbon contents and heating values
Equipment level emission factors	▸ Quantity of fuel combusted (volume, mass or heat content) by fuel type and equipment type	▸ Accurate for CH_4 and N_2O emissions ▸ Fuel consumption can be determined from equipment ratings and operating hours	▸ Fuel consumption may not be metered at the equipment level and may be difficult to reconcile between equipment estimates and metered consumption ▸ Data intensive approach with correspondingly low materiality.
Manufacturer data for specific	▸ Volume of fuel combusted	▸ Accurate for CH_4 and N_2O emissions	▸ Limited availability of information

Method	Data Required	Advantages	Disadvantages
equipment	▸ Manufacturer's data		
Power/energy output-based approach	▸ Power or energy output	▸ Data may be more readily available for some sources	▸ Least accurate approach, assuming efficiency of equipment and default fuel composition
Allocating Emissions from Combined Heat and Power			
UK ETS efficiency approach	▸ Fuel consumption ▸ Electricity produced ▸ Steam produced (mass, T, P)	▸ Simple approach ▸ Widely applicable, but less rigorous	▸ Based on assumption that thermal energy efficiency is twice that of electricity rather than process efficiencies. ▸ Least rigor of all approaches
CCAR and WRI/WBCSD efficiency allocation approach	▸ Fuel consumption ▸ Electricity produced ▸ Steam produced (mass, T, P) ▸ Efficiency of steam production ▸ Efficiency of electricity production	▸ Simple approach ▸ Based on actual efficiencies of heat and electricity production if available	▸ Actual efficiencies of heat and power production may not be fully characterized, necessitating the use of assumed values.
Energy content approach	▸ Fuel consumption ▸ Electricity produced ▸ Steam produced (mass, T, P) ▸ Specific enthalpy of steam	▸ Allocates emissions according to useful energy in output stream ▸ Best suited where heat can be characterized as useful energy (e.g, process or district	▸ Requires information regarding the intended use of heat energy ▸ May not be suitable where heat is used for mechanical work, as it may overstate the amount of useful energy thus

Method	Data Required	Advantages	Disadvantages
		heating)	understating emissions.
Work potential approach	▸ Fuel consumption ▸ Electricity produced ▸ Steam produced (mass, T, P) ▸ Specific enthalpy of steam ▸ Specific entropy of steam	▸ Suitable where heat is to be used for producing mechanical work	▸ May not be suitable for hot water systems as these systems do not perform mechanical work
PUC approach	▸ Fuel consumption ▸ Electricity produced ▸ Steam produced (mass, T, P)	▸ Simple approach ▸ Widely applicable, but less rigorous	▸ Less rigorous than work potential and energy content approach
Flaring			
Test data or vendor specifications	▸ Quantify of gas flared ▸ Manufacturer's data	▸ Accurate for design/tested flare conditions	▸ Testing is costly ▸ Testing is difficult in a flare plume
Material balance approach based on measured gas composition and measured or estimated flared volume	▸ Quantify of gas flared ▸ Composition of gas stream flared	▸ Relatively accurate approach	▸ Limited data available on flare gas flow rate ▸ Flare gas composition is often not measured due to sampling considerations
Material balance approach based	▸ Operational data needed to estimate	▸ Flared volumes are tracked as losses in	▸ Default factors rely on assumed gas carbon contents and heating

Method	Data Required	Advantages	Disadvantages
on assumed gas composition and estimated flared volume	flared gas volumes	refining operations; therefore, data is information is available.	values
Mobile Sources			
Fuel Based Approach	▸ Volume and type of fuel consumed ▸ Heating value, fuel composition can also be provided as an option	▸ Accurate estimate of CO_2 achieved by performing material balance ▸ Default fuel emission factors can be used, however, materiality of source is low and improvement in accuracy for actual fuel compositional data is negligible.	▸ Requires record of fuel consumption ▸ Costly to track fuel usage, heating value and/or composition - low materiality source may not justify significant record-keeping requirements for tracking fuel composition or heating value
Default emission factors based on classification of vehicle	▸ Vehicle miles traveled by specific vehicle classification, by fuel type	▸ Data on vehicular travel may be tracked for cases where fuel consumption is not tracked	▸ Requires record keeping by vehicle classification ▸ Data for off-road vehicles or construction equipment may not be available
	▸ Volume of fuel consumed by specific vehicle classifications and fuel types		▸ Data on fuel consumption accounting by vehicle type is likely not available ▸ No improved accuracy for CO_2 emissions over total fuel consumed by fuel type

Method	Data Required	Advantages	Disadvantages
			▸ Onerous data requirements for a low materiality source

- Refinery fuel gas combustion in a typical refinery is the single largest contributor to overall GHG emissions. Therefore, accurate methodologies are important to minimize uncertainties, and sufficiently accurate source data is also critically important. The most accurate methodologies are the fuel-based material balance approach based on measured fuel consumption and fuel composition, and CEMS direct measurement of CO_2 in the flue gas stream. As previously discussed, the accuracy of fuel specific data (e.g., compositional analysis) is dependent not only on the analytical and QA/QC procedures, but also on the fuel sampling frequency.
- Combustion of other fuels, such as natural gas and LPG, may also be significant sources of GHG emissions, although typically less significant than refinery fuel gas combustion. Methodologies selected should be commensurate with the materiality, and availability of data. For imported natural gas, fuel consumption records should be readily available.

7.2 Vented Emissions

Vented emissions occur at a refinery as part of the operations or design of the equipment. There are several processes, including catalyst regeneration, coking, hydrogen production, sulfur recovery, and asphalt blowing, that have associated vented emissions in a refinery. This section will detail the approach for quantifying emissions from each of the vented emission processes.

Table 7-14 presents a summary of the methods, the accuracy rating, and relative level of materiality for vented sources associated with a petroleum refinery. The materiality values presented reference the general discussion of GHG emissions sources from refining operations from Table 4-1.

7.2.1 Process Emission Methods

7.2.1.1 FCCU Catalyst Regeneration

During the catalytic cracking process, coke that is deposited on the catalyst must be continuously or periodically removed to restore catalyst activity. The catalytic regenerator burns off the coke by operating in two ways. One operational scenario is complete CO burn off. This operational mode produces a hot exhaust stream that is 2% O_2 and less than 1% CO. The second operational mode is partial burn of the CO which produces an exhaust stream that is 1% O_2 and 6-8% CO. The partially burned gases are sent to a CO boiler to complete the conversion of CO to CO_2 prior to exiting the stack. The scenarios can be viewed as identical in terms of emissions because the entire CO is converted to CO_2 before exiting the stack. There are negligible emissions of CH_4 and TOC expected from the regeneration unit.

There are two commonly used methodologies for accounting for emissions from the regeneration unit, both of which are inherently based on the flue gas composition of CO

Table 7-14. Summary of Vented Source GHG Estimation Methodologies

Source	Method	Applicable Pollutant	Data Required	Accuracy Ranking			Source Materiality, % of total emissions
				API Compendium	IPIECA Guidelines[a]	EU ETS[b]	
FCCU catalyst regeneration	Coke burn rate approach	▸ CO_2	▸ Coke burn rate ▸ Fraction carbon in coke	Preferred approach	Tier A	Tier 1	35%
	Exhaust Composition approach	▸ CO_2	▸ Air rate ▸ Supplemental O_2 rate ▸ Fraction CO_2 in exhaust ▸ Fraction CO in exhaust	Preferred approach	Tier A	Not addressed	
	Default emission factor	▸ CO_2	▸ Coke burn rate	Alternate approach	Tier C	Not addressed	
Other catalyst regeneration	Catalyst regeneration rate approach	▸ CO_2	▸ Catalyst regeneration rate ▸ Fraction carbon on catalyst	Preferred approach	Tier A	Tier 1	Low
Hydrogen production	Feedstock rate approach	▸ CO_2	▸ Feedstock rate ▸ Feedstock	Preferred approach	Tier A	Tier 2	13%

Source	Method	Applicable Pollutant	Data Required	Accuracy Ranking			Source Materiality, % of total emissions
				API Compendium	IPIECA Guidelines[a]	EU ETS[b]	
			carbon compostion				
Hydrogen Production	Production rate approach	▸ CO_2	▸ Hydrogen make ▸ Feedstock hydrocarbon composition	Alternate approach	Tier B	Not addressed	13%
	Mass balance	▸ CO_2	▸ Hydrogen make ▸ Feedstock rate ▸ Steam rate	Not addressed	Tier C	Not addressed	
	Default emission factor approach	▸ CO_2	▸ Feedstock rate or hydrogen production rate	Alternate approach	Not addressed	Tier 1	
Coking	Coke burn rate approach	▸ CO_2	▸ Coke burn rate ▸ Fraction carbon in coke	Preferred approach	Not addressed	Tier 1	NA (generally <5-10%)
	Exhaust Composition approach	▸ CO_2	▸ CO_2 in exhaust ▸ Exhaust flow rate	Not referenced	Not Referenced	Tier 2	

Source	Method	Applicable Pollutant	Data Required	Accuracy Ranking			Source Materiality, % of total emissions
				API Compendium	IPIECA Guidelines[a]	EU ETS[b]	
Sulfur recovery unit	Mass balance approach	▸ CO_2	▸ Gas treatment flow rate ▸ Mole fraction CO_2 in gas at inlet and outlet of treatment unit	Preferred approach	Tier A	Not addressed	Low
Asphalt blowing	Site-specific measurement approach	▸ CO_2 ▸ CH_4	▸ Exhaust flow rate ▸ Exhaust CH_4 and CO_2 composition	Preferred approach	Not addressed	Not addressed	Low
	Default emission factor approach	▸ CO_2 ▸ CH_4	▸ Blown asphalt rate	Alternate approach	Not addressed	Not addressed	
Crude Storage Tanks	EPA TANKS model appraoch	▸ CH_4	▸ Numerous tank, throughput, and diurnal temperature parameter	Not addressed	Not addressed	Not addressed	Negligible
Non-routine and maintenance/turnaround	Engineering estimate	▸ CH_4	▸ Volume of gas released per event ▸ Number of	Preferred	Tier A	Not addressed	Negligible

Source	Method	Applicable Pollutant	Data Required	Accuracy Ranking			Source Materiality, % of total emissions
				API Compendium	IPIECA Guidelines[a]	EU ETS[b]	
			events per year ▸ Mole % CH_4				
Refrigerants	Consumption based usage	▸ PFCs ▸ HFCs	▸ Refrigerant charge volume	Not addressed	Not addressed	Not addressed	Negligible

[a] IPIECA Guideline tiers are ranked A to C, with A being the most accurate.
[b] EU ETS Monitoring and Reporting Guideline tiers are ranked 1 to 3, with 3 being the most accurate.

and CO_2. These methodologies are stated as equivalent in accuracy per the API Compendium (API, 2004).

Coke Burn Rate Method

The first methodology is based on the coke burn rate and the weight fraction of carbon in the coke. This methodology assumes a stoichiometric combustion of the carbon in coke to CO_2. This is a preferred methodology in the API Compendium and the Tier 1 approach referenced in the EU ETS Guidelines for petroleum refining.

$$E_{CO_2} = CC \times CF \times \frac{44 \text{ mass units } CO_2}{12 \text{ mass units } C}$$

Equation 7-16

where,

E_{CO2}	=	Emissions of CO_2 in units of mass (pounds, kg, tonnes) per period
CC	=	Coke burn rate in units of mass per period
CF	=	Fraction of carbon in the coke burned
44	=	Molecular weight of CO_2
12	=	Molecular weight of carbon (coke is assumed to be carbon)

The fraction of carbon in the coke burned can be a measured value providing the most accuracy, or a published value that can be taken from Table 7-1 in this document.

The coke burn rate, CC in Equation 7-8 above, can be calculated using the methodology in EPA's 40 CFR Chapter 1, 63.1564, as indicated in Equation 7-17. Note that the standard conditions for the constants in this equation are at 20˚C and 1 atmosphere pressure. This implies that the volumetric flow data are on the same basis. U.S.-based refineries use standard conditions of 60˚F and 1 atm.

$$CC = K_1 Q_r \times (\%CO_2 + \%CO) + K_2 Q_a - K_3 Q_r \times [(\%CO/2) + \%CO_2 + \%O_2] + K_3 Q_{oxy} \times (\%O_{xy})$$

Equation 7-17

where,

CC	=	Coke burn rate in units of mass per hour
Q_r	=	Volumetric flow of exhaust before adding air or gas streams. (e.g., measure after electrostatic precipitator, and before CO boiler), dscm/min or dscf/min (STP @ 20˚C, 1 atm.)
Q_a	=	Volumetric flow rate of air to FCCU regenerator, as determined from instruments in control room, dscf/min or dscm/min (STP @ 20˚C, 1 atm.)
$\%CO_2$	=	CO_2 concentration in regenerator exhaust, ppmvd
%CO	=	CO concentration in regenerator exhaust, ppmvd
$\%O_2$	=	O_2 concentration in regenerator exhaust, ppmvd

K_1	=	Material balance and conversion factor, 0.2982 kg-min/hr-dscm or 0.0186 lb-min/hr-dscf (STP @ 20˚C, 1 atm.)
K_2		Material balance and conversion factor, 2.088 kg-min/hr-dscm or 0.1303 lb-min/hr-dscf (STP @ 20˚C, 1 atm.)
K_3		Material balance and conversion factor, 0.0994 kg-min/hr-dscm or 0.0062 lb-min/hr-dscf (STP @ 20˚C, 1 atm.)
Q_{oxy}		Volumetric flow rate of oxygen-enriched air stream to regenerator, as determined from instruments in the control room, dscm/min or dscf/min (STP @ 20˚C, 1 atm.)
$\%O_{xy}$		Oxygen concentration in oxygen-enriched air stream, ppmvd

The EU ETS Monitoring and Reporting Guidelines reference industry best practice to calculate coke burn rate for the Tier 1 guidance. For the Tier 2 (more accurate) guidance, the coke burn rate can be "calculated from the heat and material balance over the catalytic cracker".

A slight deviation of the coke burn method uses the catalyst regeneration rate and weight fraction of coke on catalyst to derive the coke burn rate. The derived coke burn rate could then be substituted into Equation 7-8 with a measured or standard carbon weight fraction to determine emissions.

Flue Gas Composition Method

The second methodology used to calculate emissions from the regeneration unit uses a measured quantity of the flue gas. Equation 7-18 shows the general form of the expression which uses a measured air flow rate, measured concentrations of CO_2 and CO, and a measured rate of supplemental oxygen (if used).

$$E_{CO_2} = (AR + SOR) \times (FCO_2 + FCO) \times \frac{44}{\text{molar volume conversion}} \times \frac{\text{n, min}}{\text{period}}$$

Equation 7-18

where,

E_{CO2}	=	Emissions of CO_2 in units of mass (pounds, kg, tonnes) per period
AR	=	Air rate in standard cubic feet or cubic meters per minute (STP @ 60˚F, 1 atm.)
SOR	=	Supplemental oxygen rate (if used) in standard cubic feet or cubic meters per minute (STP @ 60˚F, 1 atm.)
FCO_2	=	Mole fraction CO_2 in the flue gas (enter "0.12" for 12%, not 12)
FCO	=	Mole fraction CO in the flue gas (enter "0.08" for 8%, not 8)
Molar volume conversion	=	Conversion from molar volume to mass (379.3 scf/lbmole or 23.685 m^3/kgmole)

n = Minutes per period

The molar concentrations of CO and CO_2 are included because a partial burn would have both compounds in the flue gas stream and after passing through the CO boiler the entire exit stream is oxidized to CO_2.

Both methods for calculating CO_2 emissions from the regeneration unit are dependent on the CO and CO_2 measured in the flue gas stream; therefore, both approaches are derived from the same source data. The coke burn rate method also relies on a measurement of the carbon in coke and is therefore, more data intensive.

Default Emission Factor Method

A default emission factor approach is referenced in both API Compendium and IPIECA Guidelines as an alternate or Tier C approach. The default emission factor for coke is provided in Table 4-1 of the API Compendium:
0.1084 tonnes CO_2/MMBtu (HHV).

Note that this factor is based on coke product from the refinery, which may have a higher carbon content than coke deposited on catalyst in the catalytic cracking process.

7.2.1.2 Other Catalyst Regeneration

There are other refinery process that use catalyst regeneration units including catalytic reformers and hydroprocessing units. These units are designed to run continuously or periodically and combust coke on spent catalyst. The methodology for calculating emissions from these units is based on the same approach as for the catalytic cracking regeneration unit.

$$E_{CO_2} = CRR \times FC \times \frac{44 \text{ mass units } CO_2/\text{mole}}{12 \text{ mass units C/mole}}$$

Equation 7-19

where,

E_{CO2} = Emissions of CO_2 in tonnes per year
CRR = Catalyst regeneration rate in tonnes per year
FC = Weight fraction of carbon on spent catalyst

If the catalyst is regenerated periodically then the catalyst regeneration rate (CRR) would be in tonnes per event and would have to be multiplied by the number of events per year to calculate annual CO_2 emissions. If the catalyst is regenerated continuously then the catalyst regeneration rate (CRR) would be in tones per hr and would have to be multiplied by the number of hours the process was run per year to calculate annual CO_2 emissions.

7.2.1.3 Coking

There are several types of cokers in refineries including delayed cokers, fluid cokers, and flexi-cokers. Only fluid cokers and flexi-cokers have CO_2 vent emissions from the coke burner. The emissions from the cokers are calculated using the same methodology for - the catalytic cracking regeneration unit. Equation 7-13 can be applied to a known amount of coke burned in the coker to calculate emissions, as referenced in the API Compendium and the Tier 1 approach in the EU ETS Guidelines. The EU ETS Guidelines also reference the measurement of CO_2 emissions in the offgas as the Tier 2 approach.

7.2.1.4 Hydrogen production

The quantity of CO_2 vented depends on the carbon to hydrogen ratio of the feed gas. Common feedstocks for hydrogen production include natural gas, naphtha, and refinery fuel gas.

Feedstock Rate and Carbon Composition Approach

There are two material balance approaches for estimating CO_2 emissions from hydrogen production, based on feedstock composition. The first approach, based on the feed rate and feedstock carbon content, is shown in Equation 7-20.

$$E_{CO_2} = FR \times CF \times \frac{44 \text{ mass units } CO_2}{12 \text{ mass units C}} \qquad \text{Equation 7-20}$$

where,

E_{CO2}	=	Emissions of CO_2 in units of mass (pounds, kg, tonnes) per period
FR	=	Feedstock rate in units of mass per period (feedstock rate excluding H_2O fed)
CF	=	Mole fraction of carbon in feedstock
44	=	Molecular weight of CO_2
12	=	Molecular weight of carbon

For hydrogen production operations that use pressure swing absorption (PSA) for hydrogen separation, the offgas from the PSA is typically recycled back to the reformer heater. It is important that the offgas recycle is not separately accounted for as fuel to the reformer furnace as this would effectively double count those emissions (i.e., counted as feedstock and as fuel).

Hydrogen Production Rate Approach

A second approach is a derivation of the material balance approach using hydrogen production and reaction stoichiometry based on feedstock composition. For the

hydrocarbon constituents in the feedstock, the chemical reaction shown below is used to derive a weighted average stoichiometric factor based on composition data.

$C_xH_{(2x+2)} + 2xH_2O \quad \rightarrow \quad (3x+1)H_2 + xCO_2$

Equation 7-21 provides the equation for CO_2 emissions from hydrogen production using the hydrogen rate and weighted average stoichiometric factor.

$$E_{CO_2} = H_2R \times \frac{x \text{ mole } CO_2}{(3x+1) \text{ mole } H_2} \times \frac{44}{\text{molar volume conversion}} \qquad \text{Equation 7-21}$$

Where:

E_{CO2}	=	Emissions of CO_2 in units of mass (pounds, kg, tonnes) per period
H_2R	=	Rate of hydrogen production in scf per period (STP @ 60˚F, 1 atm.)
X	=	Stoichiometric weighted average
44	=	Molecular weight of CO_2
Molar volume conversion	=	Conversion from molar volume to mass (379.3 scf/lbmole or 23.685 m^3/kgmole)

When refinery gas is used as a feedstock, this equation should not be used (without modification). Refinery fuel gas typically contains hydrogen, and this "free" hydrogen passes through the process without producing any attendant CO_2 emissions. Thus, this methodology based on hydrogen production rate would tend to overestimate CO_2 emissions when refinery fuel containing hydrogen is used as a feedstock.

As previously stated, for hydrogen production operations that use PSA for hydrogen purification, the offgas from the PSA is typically recycled back to the reformer heater. This offgas stream containing hydrogen would not typically be accounted for in the hydrogen make from the process. Thus, when PSA is used the hydrogen production rate approach should not be used unless separate accounting of the offgas stream is integrated.

It is important to point out that since these methods above rely upon knowledge of reaction stochiometry and fuel composition, the composition should be measured to increase accuracy, especially when non-standard fuels (refinery gas, naphtha) or mixtures are used as feedstock.

Emission Factor Approach – API Compendium

A default emission factor approach has been included in the API Compendium that was derived based on pipeline quality natural gas as a feedstock. The default emission factor approach may be appropriate for natural gas feedstock, but is not adequate for feedstocks that do not have significant methane content. The default emission factor approach should not be used when naphtha reformers are used at the H_2 plant, for example. The default emission factor approach is based on an emission factor of 32,721 pounds of

carbon per million standard cubic feet of feedstock (on a dry basis) or 8,064 pounds or carbon per million standard cubic feet of H_2 produced. The default emission factors are shown below:

119,976 lb CO_2/million scf (dry) feedstock 54.42 tonnes CO_2/million scf (dry) feedstock 1,922 tonnes CO_2/million m^3 (dry) H_2 feedstock
29,568 lb CO_2/million scf (dry) H_2 produced 13.41 tonnes CO_2/million scf (dry) H_2 produced 473.6 tonnes CO_2/million m^3 (dry) H_2 produced

Emission Factor Approach – EU ETS Guidelines

A second emission factor approach provided as a Tier 1 method in the EU ETS Guidelines uses and emission factor of:

2.9 tonne CO_2 / tonne feed processed

This emission factor is conservatively based on ethane as the feedstock. Depending on the actual hydrogen feedstock composition, this EU ETS default factor may overstate emissions from hydrogen production.

Production Mass Balance Approach – IPIECA Guidelines

IPIECA Guidelines references as a Tier C approach a process mass balance based on the estimated hydrogen production. An overall mass balance could be performed if the feedstock mass rate, steam rate, and the hydrogen production rate are known or can be estimated. Based on the hydrogen reaction equation, the difference between the inlet mass of feedstock and steam, and the outlet mass of hydrogen make would be the mass of CO_2 generated from the process.

Mass emissions CO_2 = (mass of feed + mass of steam) – mass of hydrogen

Equation 7-14

This approach would require an accurate measurement of flow and composition of each of these streams in order to have an accurate overall mass balance. This approach may also suffer from the same issues associated with using the hydrogen production rate approach, in that the streams must account for all mass in and out of the system, with no double counting of internal recycle streams.

7.2.1.5 Sulfur Recovery Unit

Sulfur recovery units are used to convert hydrogen sulfide recovered from refinery gas streams into elemental sulfur. The emissions from amine absorption processes are calculated using a mass balance approach for CO_2 based on the volume of gas treated and the mole % of CO_2. The mass balance approach is shown in Equation 7-22:

$$E_{CO2} = Q_{gas} * 1/379 * m_{CO2} * 44 * 60 * 8760 \qquad \text{Equation 7-22}$$

Where:

E_{CO2} = CO_2 emissions, lb CO_2/year
Qgas = Volumetric flow rate of gas treated, scfm
M_{CO2} = Mole fraction CO_2 in the inlet stream

For refining operations, the CO_2 content in the treated gas stream is typically low. For some SRU configurations, the amine absorption process may be downstream of a Claus process, with the regenerated sulfur and CO_2 recycled back to the inlet of the Claus process. Depending on the configuration, there is a potential to double count emissions from SRU where these emissions may already be captured by the sour gas incinerator or flare.

This is a source where data is scarce and the significance is uncertain. While not expected to be a large contributor relative to other sources at a refinery, the absolute emissions may be significant from SRU operations.

7.2.1.6 Asphalt blowing

Asphalt blowing is a process in which asphalt oils are blown with heated air to aid in polymerization and stabilization of the mixture. The exhaust from this process can be vented directly to the atmosphere (uncontrolled) or they can be sent to a vapor scrubbing or incinerator process unit (controlled).

In California, nine refineries have asphalt production capabilities (refer to Table 3-2), and asphalt is a primary product at several of the refineries. In general, there is a paucity of data on asphalt blowing operations and more data would be needed to determine the significance of these emissions. The most accurate approach is to use site specific data for calculations. When site specific data are unavailable, a representative approach taken from ARPEL is presented below. Note that the ARPEL approach (ARPEL, 1998) references a 1980 study where an analysis of the headspace vapor composition from a tank containing air-blown asphalt was reported.

Site Specific Data Approach

In order to account for emissions from uncontrolled processes, CH_4 and CO_2 emissions can be calculated using site-specific data. The required data would include exhaust flow rate and composition.

Default Emission Factor Approach

When site-specific information regarding exhaust flow rate and composition are unknown, default emissions factors can be used. The EPA's AP-42 document provides simple emission factors for calculating uncontrolled emissions from asphalt blowing on an air-free basis. These factors are shown in Table 7-15.

Table 7-15. Default emission factors for asphalt blowing

30 kg emissions/megagram blown asphalt (original units)
60 lb emissions/ton blown asphalt (original units)
0.03 tonnes emissions/tonne blown asphalt (converted)

Note that the emission factors in Table 7-15 are on a mass of emissions basis, and need to be speciated to derive CH_4 and CO_2 emissions. These emission factors are used with a mass of asphalt processed to calculate emissions from the procedure. Once the emissions are calculated a gas known or typical composition must be used to calculate compound specific emissions. If the gas composition is unknown, a typical composition from Table 6.24 of the ARPEL emissions protocol document can be used (ARPEL, 1998), although these compositions are from measurements in the vapor space of a tank containing air-blown asphalt. The typical gas composition is shown in Table 7-16.

Table 7-16. Default gas composition from asphalt storage tank

Compound	Mole %	Molecular Weight
H_2	52	2.02
H_2S	4	34.08
CO	4	28.01
CO_2	9	44.01
Methane	13	16.04
Ethane	4	30.07
Propane	4	44.10
Butane	4	58.12
Pentanes+	4	72.15

Using this approach, the exhaust gas molecular weight must be calculated to speciate the total emission factors provided in Table 7-15 above.

Avg. MW = ∑ (mole fraction of constituent i * molecular weight of constituent i)

The emissions are then calculated using Equation 7-23 for both CO_2 and methane emissions:

$$E_{CO_2} = \text{Emission factor} \times \frac{mole \cdot fraction \cdot CO_2}{Avg. \cdot MW} \times 44 \times (asphault \cdot rate)$$

Equation 7-23

7.2.2 Other Vented Emission Methods

Crude storage tank working and standing loss emissions

The API Compendium does not provide CH_4 emissions from crude oil storage tanks, as it assumes that the losses are negligible. It does, however, reference the EPA TANKs program, http://www.epa.gov/ttn/chief/software/tanks/index.html, as an approach to quantify the CH4 emissions from uncontrolled crude storage tanks.

Non-routine and Maintenance/Turnaround

Non-routine emissions that are not routed to the fuel gas system or flare units can be vented to the atmosphere. Non-routine emissions result from maintenance or turnaround planned activities, and releases that result from unplanned events. Maintenance or turnaround activities may include blowdown of equipment lines or purging of process gas to prevent unsafe work conditions. Emergencies or upsets are examples of unplanned non-routine emissions. These emissions are generally considered insignificant, however if there is an appreciable release that is vented to the atmosphere an engineering calculation approach can be implemented to estimate emissions using Equation 7-24:

$$E_{CH4\ or\ CO2} = \frac{\text{Gas Volume Released}}{\text{Event}} \times \text{Mole\%}_{CH4\ or\ CO2} \times \frac{\#\text{Events}}{\text{Year}} \times \frac{MW_{CH_4\ or\ CO_2}}{\text{molar volume conversion}}$$

Equation 7-24

where,

$E_{CH4\ or\ CO2}$	=	Emissions of CH_4 or CO_2 emissions in units of mass
Molar volume conversion		Conversion from molar volume to mass (379.3 scf/lbmole or 23.685 m^3/kgmole @ 60°F and 14.7 psia)

Refrigerants

Refrigerants may be used in refinery processes. Methods that are consistent with the CCAR guidelines should be implemented to deal with emissions calculations from these processes.

The Registry GRP includes a 3 step process for quantifying refrigerant losses:

- Step 1: Determine if refrigerant losses are significant or de minimis

- Use the provided Table III.11.1 to determine the upper bound loss rate for the type of system, the average annual refrigerant charge, and type of refrigerant
- Use the provided Table III.11.2 to determine the refrigerant composition
- Use Equation III.1a to determine annual losses:
  - HFC emissions (kg/yr) = refrigerant charge (kg/yr) x annual leak rate (%)
- Convert the HFC emissions to CO_2 equivalent emissions using the global warming potentials of the HFC constituents
- If the sum is less than 5% of entity-wide emissions, the HFC emissions are de minimis and do not need to be reported. If they are significant, proceed to steps 2 and 3.

- Step 2: Mass Balance
  - Assess refrigerant inventory at beginning of year (A)
  - Assess refrigerant inventory at end of year (B)
  - Assess purchases/acquisitions of refrigerants during the year (C)
  - Assess sales/disbursements of refrigerants during the year (D)
  - Assess the change to the full charge of equipment during the year (E)
  - Use Equation III.11b to estimate the amount of refrigerant losses
    - Total annual emissions = A - B + C - D + E
- Step 3: Convert to CO_2 equivalent emissions and sum

7.2.3 Vented Source Method Evaluation

The most significant sources of venting in petroleum refining operations are sources of CO_2 from process units, including:

- Catalyst regeneration, especially catalytic cracking
- Hydrogen production
- Coking operations.

CO_2 emissions from catalyst regeneration and hydrogen production together can in some refineries contribute up to around 40-50% of the total GHG emissions. Therefore, it is important to consider accurate methodologies and activity data for these sources.

The remaining sources of vented emissions are generally expected to be small contributors to the overall GHG inventory for a petroleum refinery. While insignificant contributors to the emissions and uncertainties in reported data, some of the methodologies for these low materiality sources are data intensive.

A summary of the evaluation of options for GHG emissions calculation methodologies for vented sources is presented in Table 7-17 below. The table presents the sources of vented emissions, their respective methodology options, the data requirements, and advantages and disadvantages.

Table 7-17 should be viewed together with the relative accuracy ranking of the methodologies provided in Table 7-14 from the various protocols. In general, the accuracy of the methodology should be commensurate with the relative materiality of the source. For example, the EU ETS Guidelines and IPIECA Guidelines do not include methods for the smaller sources of vented emissions from refining operations as these are generally insignificant contributors to the overall GHG emissions from a typical facility.

Options for methods to quantify CO_2 emissions from the most significant sources, namely catalyst regeneration, hydrogen production, and coking operations, are generally based on measured flow rates and carbon compositional analyses. These site-specific methods are considered the most accurate in the reference documents that were reviewed for petroleum refining. Data to support these more accurate methods for the most significant sources are generally available in a typical refinery. However, for the small sources, data availability for accurate methods may not be available and the resources required to collect and report emission using more complex methods may not be justified since their overall contribution to the uncertain in the facility-wide GHG inventory is insignificant.

Table 7-17. Summary and Analysis of Vented Source Methods

Source	Method	Data Required	Advantages	Disadvantages
Process Vents				
Catalyst Regeneration	▸ Coke burn rate	▸ Coke burn rate ▸ Air rate ▸ CO_2 ▸ CO ▸ O_2 ▸ Carbon in coke	▸ Good accuracy for CO_2 emissions ▸ Coke burn rate is determined for other existing air quality reporting in refineries.	▸ Effectively requires more data than exhaust gas composition method
	▸ Exhaust gas composition	▸ Air rate ▸ CO_2 ▸ CO ▸ O_2 ▸ Supplemental O_2	▸ Good accuracy for CO_2 emissions ▸ Requires less overall data than the coke burn rate method	▸ Exhaust flow and CO2 concentration would be simpler approach based on the same principles
Coking	▸ Coke burn rate	▸ Coke burn rate ▸ Air rate ▸ CO_2 ▸ CO ▸ O_2 ▸ Carbon in coke	▸ Only requires fuel consumption data	▸ Requires significant information

Source	Method	Data Required	Advantages	Disadvantages
Hydrogen Production	▸ Feedstock rate ▸ Feedstock compositional analysis	▸ Feedstock rate ▸ Mole fraction carbon in feedstock	▸ Accurate carbon balance approach based on the premise that all carbon in the feedstock is oxidized to CO_2	▸ Requires sample and analysis procedure for feedstock
	▸ Hydrogen production rate ▸ Feedstock compositional analysis	▸ Hydrogen production rate ▸ Mole fraction carbon in feedstock	▸ Accurate carbon balance approach	▸ Requires sample and analysis procedure for feedstock, as well as algorithm to derive stoichiometric weighted average ▸ Should not be used without modification for feedstocks with native hydrogen ▸ Should not be used without modification for plants with PSA offgas recycle
	▸ Emission Factor Approach	▸ Feedstock rate	▸ Simple approach	▸ Default emission factor assumes natural gas as feedstock ▸ Lower accuracy than

Source	Method	Data Required	Advantages	Disadvantages
				material balance approaches for a significant source
Sulfur Recovery	▸ Volume of gas treated	▸ Volume gas treated ▸ Mole % CO_2 in treated gas	▸ Generally accurate approach	▸ Concentration of CO_2 in gas stream is typically very low for refining operations ▸ Volume of gas treated may not be metered
Asphalt blowing	▸ Site specific data approach	▸ Exhaust flow rate ▸ Concentration of CO_2 and CH_4 in exhaust	▸ Accurate approach	▸ Data on exhaust flow and composition may not be available ▸ Relatively low materiality source
	▸ Default emission factor approach	▸ Rate of blown asphalt	▸ Simple approach	▸ Default composition is from 1980 data on vapor space in tank containing air-blown asphalt
Crude storage tanks	▸ TANKS program	▸ Physical properties of crude ▸ Tank throughputs ▸ Diurnal temperature		▸ Method is data intensive ▸ Source is not material for CH_4 – API Compendium does not address source

Source	Method	Data Required	Advantages	Disadvantages
		▸ Storage tank design information		
Non-routine events and maintenance/turn around	▸ Event tracking approach	▸ Gas volume released ▸ Mole % CH_4 ▸ #events/yr	▸ Relatively accurate approach	▸ Negligible CH_4 composition in most process units ▸ Intensive data tracking
Refrigerants	▸ Registry GRP approach	▸ Refrigerant charge rates	▸ Method already included in GRP	▸ Insignificant contributor to overall emissions in a refinery

7.3 Fugitive Emissions

7.3.1 Equipment Component Fugitive Emissions

Fugitive emissions occur at a refinery from equipment component leaks, such as valves, flanges, pump seals, compressor seals, relief valves, sampling connections, process-drains, and open-ended lines. Refineries are required to implement a stringent leak detection and repair (LDAR) program to minimize VOC and HAP emissions from fugitive equipment component sources. There are numerous problems associated with accurately measuring very small emissions from individual components in a very complicated refinery setting. These issues include (but are not limited to) problems with mobile, handheld instrument detection limits, background ambient VOC and CH_4 concentrations, and the number of measurements required to reach statistically significance.

In general, the CH_4 concentration in the gas and liquid streams in a refinery is negligible, with the exception of the refinery fuel gas and natural gas supply systems. As previously stated, the overall contribution of GHG emissions from fugitive sources is often considered negligible (e.g., API Compendium). The IPIECA Guidelines and EU ETS Guidelines do not consider fugitive sources in the methods that are presented. Recent studies have indicated that methane emissions from equipment components may be higher than previously believed. This is an area with lack of sufficient data to adequately assess the contribution to GHG emissions from refining operations.

7.3.1.1 Equipment-based calculation

One data intensive method for calculating fugitive emissions from a refinery is using equipment counts and equipment specific factors to determine CH_4 emissions. The following equation should be used with Table 7-17 to determine emissions.

$$E_{CH_4} = F_{A\,VOC} \times \frac{WF_{CH_4}}{WF_{TOC} - WF_{CH_4}} \times N \qquad \text{Equation 7-25}$$

where,

E_{CH4}	=	Emission rate of CH_4 from all components of a given type in the stream
$F_{A\,VOC}$	=	Average emission factor (as VOC)
WF_{TOC}	=	Average weight fraction TOC in the stream
WF_{CH4}	=	Weight fraction of CH_4 in the TOC
N	=	Number of components of the given type in the stream

The equation depends on the number of pieces of equipment in a specific population, the amount of methane and TOC in the stream. The equation should only be applied to streams that have 10% or less CH_4. Generally refineries have very little CH_4, and

Table 7-18. Summary of Fugitive Source GHG Estimation Methodologies

Method	Applicable Pollutant	Data Required	Accuracy Ranking			Source Materiality, % of total emissions
			API Compendium	IPIECA Guidelines[a]	EU ETS[b]	
Leaks -- equipment count approach	▸ CH_4	▸ Equipment counts by service and component type ▸ CH_4 content of gas or liquid stream	Preferred approach	Not addressed	Not addressed	Very low
Leaks -- facility emission factor approach	▸ CH_4	▸ Refinery crude throughput	Alternate approach	Not addressed	Not addressed	
Wastewater treatment – BOD approach	▸ CH_4	▸ Wastewater flow rate ▸ BOD ▸ Fraction an aerobically digested	Preferred approach	Not addressed	Not addressed	
Wastewater treatment – COD approach	▸ CH_4	▸ Wastewater flow rate ▸ COD ▸ Fraction an aerobically digested	Preferred approach	Not addressed	Not addressed	Very low
Cooling towers – WATER9 model approach	▸ CH_4 ▸ CO_2	▸ Wastewater flow ▸ VOC composition	Preferred approach	Not addressed	Not addressed	Very low
Cooling towers – emission factor approach	▸ CH_4 ▸ CO_2	▸ Wastewater flow	Preferred approach	Not addressed	Not addressed	Very low

[a] IPIECA Guideline tiers are ranked A to C, with A being the most accurate.
[b] EU ETS Monitoring and Reporting Guideline tiers are ranked 1 to 3, with 3 being the most accurate.

fugitive releases are even considered insignificant. The emission factor ($F_{A\ VOC}$) is given in Table 7-18. If the composition of the stream is unknown, then generic factors from Table 7-19 can be substituted.

Table 7-19. Average Equipment-based Emission Factors for Refineries

Component - Service	Emission Factor, Original Units, kg VOC/hr/comp.	Emission Factor, Converted to tonne VOC/hr/comp.
Valves – Gas	2.68E-02	2.68E-05
Valves – Light Liquid	1.09E-02	1.09E-05
Valves – Heavy Liquid	2.3E-04	2.3E-07
Pump Seals - Light Liquid	1.14E-01	1.14E-04
Pump Seals - Heavy Liquid	2.1E-02	2.1E-05
Compressor Seals - Gas	6.36E-01	6.36E-04
Pressure Relief Valves - Gas	1.6E-01	1.6E-04
Connectors – All	2.5E-04	2.5E-07
Open-ended Lines – All	2.3E-03	2.3E-06
Sampling Connections – All	1.50E-02	1.50E-05

Source:

US Environmental Protection Agency (EPA). *Protocol for Equipment Leak Emission Estimates*, EPA-453/R-95-017, EPA Office of Air Quality Planning and Standards, November 1995, Table 2-2.

Note: These emission factors were developed from testing performed in the 1970s and represent average emissions from uncontrolled components (i.e., components that are not subject to leak detection and repair programs). These emission factors can be converted to a CH_4 basis using Equation 7-20.

Table 7-20. Average Composition of Refinery Streams

Compound	Compressor Seals, Refinery Gas, Weight %	PRV, Liquefied Petroleum Gas, Weight %	Pipe/Valve Flanges Weight %	Pump Seals Weight %
Methane	13.3		28.6	3.3
Ethane	5.6	4.1	5.8	1.2
Propane	16	90.4	11.5	3.7
Propylene	8.8	5.1	0.1	
n-Butane	23.2		18.3	8.1
i-Butane	10	0.4	7.4	0.8
1-Butene	1.2			
n-Pentane	7.6		7.7	11.1
Isomers of Pentane	8.6		7.8	6.6
n-Hexane	4.6		3.4	11
Isomers of Hexane	1		1.6	5.5
n-Heptane			1.4	8.5

Compound	Compressor Seals, Refinery Gas, Weight %	PRV, Liquefied Petroleum Gas, Weight %	Pipe/Valve Flanges Weight %	Pump Seals Weight %
Isomers of Heptane	0.1		0.8	4.1
C-7 Cycloparaffins			0.2	1.1
n-Octane			1.8	12
Isomers of Octane			0.4	2.8
C-8 Cycloparaffins				0.1
n-Nonane			0.6	3.9
Isomers of Nonane			0.5	3.1
C-9 Cycloparaffins			0.1	0.8
n-Decane			0.8	5.1
Isomers of Decane			0.3	1.9
Cyclohexane			0.1	0.5
Isomers of Xylene			0.2	1.3
Benzene			0.1	0.5
Toluene			0.5	3
Total	100	100	100	100
Data Quality Rating[a]	D	C	C	C
EPA SPECIATE Program Profile Number	0039	0047	0316	0321

Source:
US Environmental Protection Agency (EPA). SPECIATE Version 3.2, computer program, US Environmental Protection Agency, Technology Transfer Network, Clearinghouse for Inventories & Emission Factors (CHIEF), November 2002.
[a]Quality rating pertains to the quality of the data; "A" has the best quality while "E" has the poorest quality.

Table 7-21. Average Equipment-based Emission Factors for gas service

Component – Service	Emission Factor, Original Units, kg gas/hr/component	Emission Factor, Converted to tonne gas/hr/component
Valves – Gas	4.5E-03	4.5E-06
Valves - Heavy Oil	8.4E-06	8.4E-09
Valves - Light Oil	2.5E-03	2.5E-06
Valves - Water/Oil	9.8E-05	9.8E-08
Connectors - Gas service	2.0E-04	2.0E-07
Connectors - Heavy Oil	7.5E-06	7.5E-09
Connectors - Light Oil	2.1E-04	2.1E-07
Connectors - Water/Oil	1.1E-04	1.1E-07
Flanges – Gas	3.9E-04	3.9E-07
Flanges - Heavy Oil	3.9E-07	3.9E-10
Flanges - Light Oil	1.1E-04	1.1E-07
Flanges - Water/Oil	2.9E-06	2.9E-09
Open-ended Lines – Gas	2.0E-03	2.0E-06

Component – Service	Emission Factor, Original Units, kg gas/hr/component	Emission Factor, Converted to tonne gas/hr/component
Open-ended Lines - Heavy Oil	1.4E-04	1.4E-07
Open-ended Lines – Light Oil	1.4E-03	1.4E-06
Open-ended Lines - Water/Oil	2.5E-04	2.5E-07
Pump Seals – Gas	2.4E-03	2.4E-06
Pump Seals – Light Oil	1.3E-02	1.3E-05
Pump Seals – Water/Oil	2.4E-05	2.4E-08
Others – Gas	8.8E-03	8.8E-06
Others – Heavy Oil	3.2E-05	3.2E-08
Others – Light Oil	7.5E-03	7.5E-06
Others – Water/Oil	1.4E-02	1.4E-05

Source: US Environmental Protection Agency (EPA). *Protocol for Equipment Leak Emission Estimates*, EPA-453/R-95-017, EPA Office of Air Quality Planning and Standards, November 1995, Table 2-4.

7.3.1.2 Facility-based calculation

The facility-based method is the simplest method for accounting for GHG emissions from a refinery. The only information that is required is the methane stream composition (which can be estimated with factors in Table 7-18), and the annual throughput of the facility. Table 7-23 shows the emission factor estimated for a refinery facility.

Table 7-23. Average Equipment-based Emission Factors for gas service

Source	Emission Factor Original Units	Precision (± %) [a]	Emission Factor [b] Converted Units
Refining	0.53 kg THC/m^3 crude feedstock	Not available	8.43E-05 tonnes THC/bbl feedstock 5.30E-04 tonnes THC/m^3 feedstock

Source:

European Environment Agency (EEA), *Joint EMEP/CORINAIR Atmospheric Emission Inventory Guidebook*, Third Edition, EEA, Copenhagen, 2001, updated October 2002. Refinery fugitive emission factor from Group 4, page B411-9, which is based on: Canadian Petroleum Products Institute (CPPI) and Environment Canada. *Atmospheric Emissions from Canadian Petroleum Refineries and the Associated Gasoline Distribution System for*

1988, CPPI and Environment Canada, CPPI Report No. 91-7, prepared by B.H. Levelton & Associates Ltd. and RTM Engineering Ltd., 1991. Refinery fugitive emission factor is on a total hydrocarbon (THC) basis and must be converted to a CH_4 basis using a site-specific or assumed CH_4 stream content. However, refineries tend to have insignificant CH_4 fugitive equipment leak emissions.

7.3.2 Cooling towers

AP-42 provides volatile organic compound (VOC) emission factors for refinery cooling towers (EPA, AP-42 Table 5.1-2, 1995). These factors could potentially be used to quantify CH_4 or CO_2 emissions if the concentrations are known, but the resulting contribution is generally considered to be small. Recent studies (Alberta Research Council, 2006) suggest that methane emissions from cooling towers at a moderate size refinery may be on the order of 6,000 to 7,000 tonnes CO_2 equivalent per year. While small on a relative basis, limited data are currently available on emissions from cooling towers to definitely understand their significance.

The cooling tower VOC emission factors from AP-42 are provided below:

6 lbs VOC / million gallons cooling water for uncontrolled operations
0.7 lbs VOC / million gallons cooling water for controlled operations

The oil/water separator VOC emission factors from AP-42 are:

5 lb VOC / thousand gallons of waste water for uncontrolled operations
0.2 lb VOC / thousand gallons of waste water for controlled operations

EPA has also developed a model for quantifying total organic compounds (TOC) evaporative losses from wastewater treating, impoundments and pits. The model, WATER9, can be accessed at: http://www.epa.gov/ttn/chief/software.html. However, the contribution of CH_4 and CO_2 evaporative emissions from petroleum wastewater are expected to be negligible.

7.3.3 Anaerobic wastewater treatment

Anaerobic wastewater treatment does result in small quantities of CH_4 being emitted as part of the organic decomposition process. EPA AP-42 Section 4.3.5.2 provides a method for quantifying CH_4 emissions from anaerobic wastewater treatment, when the CH_4 is not recovered:

$$E_{CH_4} = Q \times \left(\frac{\text{lbBOD}_5}{\text{ft}^3\text{wastewater}} \right) \times \left(\frac{0.22\text{lbCH}_4}{\text{lbBOD}_5} \right) \times F_{AD} \times 365 \qquad \text{Equation 7-26}$$

where,

E_{CH4} = Emission rate of CH_4 in pounds per year
Q = Wastewater flow rate in cubic feet per day

BOD_5 = Biological oxygen demand measured using the standard five day test
F_{AD} = Fraction anaerobically digested (i.e., wastewater flow fraction that is anaeobically treated versus aerobically treated)

If a site-specific value for BOD is unknown, EPA provides a default value of 0.25 pounds BOD5 per cubic foot of wastewater for the oil and gas industry.

A second approach provided by the Intergovernmental Panel on Climate Change (IPCC) provides an anaerobic wastewater treatment emissions approach based on chemical oxygen demand (COD) (IPCC, 2000). For petroleum refineries, IPCC provides a typical COD production rate of 1 gram of COD per liter of wastewater generation, with the COD value ranging between 0.4 and 1.6 g COD/L. The COD default factor for maximum CH_4 producing capacity is 0.25 kg CH_4/kg COD.

Equation 7-27 shows the calculation used to determine emissions using the IPCC method.

$$E_{CH_4} = Q \times F_{AD} \times 365 \times \left(\frac{0.25\ \text{g CH}_4}{\text{g COD}}\right) \times \left(\frac{1\ \text{g COD}}{\text{L}}\right) \times \left(\frac{28.32\ \text{L}}{\text{ft}^3}\right) \times \left(\frac{\text{tonne CH}_4}{1 \times 10^6\ g}\right)$$

Equation 7-27

7.3.4 Fugitive Source Method Evaluation

In general, fugitive emissions from refinery sources have been considered insignificant contributors to the overall GHG inventory in a petroleum refinery. However, recent studies using optical measurement methods have indicated that methane emissions from fugitive sources may be higher than previously believed. Although small relative to the overall emissions at a typical refinery, one study suggests that the absolute level of fugitive methane emissions may be above the suggested 25,000 tonne per year materiality threshold that the ARB has proposed. These results should be assessed in the context of their relevance to refining operations and control practices in California.

Table 7-25. Summary and Analysis of Fugitive Source Methods

Source	Method	Data Required	Advantages	Disadvantages
Equipment Component Fugitives	▸ Component count method	▸ Number of components in gas and light liquid service by component type ▸ Methane fraction in respective gas and light liquid streams	▸ Refineries have stringent leak detection and repair programs for controlling VOC and HAP emissions, so component counts are known.	▸ Level of overall emissions may be negligible, especially with stringent LDAR controls in place ▸ Resources required for data collection and estimation may not be justified based on the assumed low level of materiality of the source.
	▸ Default emission factor	▸ Crude throughput	▸ Simple approach ▸ Low materiality of source justifies a lower accuracy approach	▸ Low accuracy of approach; however, the source may not be material so that overall contribution to uncertainty is low
Wastewater treatment	▸ BOD approach	▸ Wastewater flow rate ▸ BOD ▸ Fraction anaerobically digested	▸ Relatively accurate approach	▸ Requires significant data tracking for a source that may be low materiality

Source	Method	Data Required	Advantages	Disadvantages
Wastewater treatment	▸ COD approach	▸ Wastewater flow rate ▸ COD ▸ Fraction anaerobically digested	▸ Relatively accurate approach	▸ Requires significant data tracking for a source that may be low materiality
Cooling towers	▸ EPA WATER9 model	▸ Per model requirements	▸ Accurate method	▸ Significant resources and data required for a source that may be immaterial
	▸ Default emission factor approach	▸ Water flowrate ▸ CH_4 content	▸ Simple approach	▸ Source may not be material

7.4 Indirect Emission Methods

Facilities must account for all direct emissions that are generated onsite, however they must also account for sources that have emissions and their products are brought onsite. Examples of these types of indirect sources are electricity, steam and heat generation, combined heat and power, cooling, feedstock/product transit, and loading and ballasting. This section details how emissions are calculated.

7.4.1 Indirect Energy Import Emission Methods

7.4.1.1 Electricity Calculations

Indirect emissions from purchased electricity use are described in Part II, Chapter 6 of the Registry GRP. Where possible, emission factors specific to the source of the electricity should be used to estimate the indirect electricity usage emissions. If the electricity was generated from a know generator facility and this facility provides emission factors, the factors should be applied to the quantity of energy supplied. This approach is most accurate; however the data may not always be available.

In the absence of these source-specific emission factors, Chapter 6 of the GRP refers to default CO2, CH4, and N2O electricity emission factors in Tables C-1 and C-2. These are the same factors as proved in Table B-4 of the API Compendium.

Table C-1 of the GRP provides CO_2 electricity emission factors by geographic regions in the U.S. taken from the U.S. EPA's eGRID database. The API Compendium also references eGRID. International electricity emission factors are provided in the API Compendium in Table 4-13.

For consistency purposes, Part II, Chapter 6 of the GRP should be followed to estimate indirect electricity usage emissions.

If the only the generator fuel type is known then published emission factors can be applied to the amount of power generated by the unit. Table 7-26 provides emission factors based on fuel type and power generated. The table was provided by the U.S Department of Energy.

Table 7-26. Electricity Usage Emission Factors by Method of Generation

	Carbon Dioxide		Methane		Nitrous Oxide	
Method of Generation	**lb/ 10^6 W-hr**	**Tonnes/ 10^6 W-hr**	**lb/ 10^6 W-hr**	**Tonnes/ 10^6 W-hr**	**lb/ 10^6 W-hr**	**Tonnes/ 10^6 W-hr**
Gas – Combined Cycle	952	0.432	0.015	6.80E-06	0.063	2.86E-05

Method of Generation	Carbon Dioxide		Methane		Nitrous Oxide	
	lb/ 10^6 W-hr	Tonnes/ 10^6 W-hr	lb/ 10^6 W-hr	Tonnes/ 10^6 W-hr	lb/ 10^6 W-hr	Tonnes/ 10^6 W-hr
Gas – Combustion Turbine	1,560	0.708	0.16	7.26E-05	0.24	1.09E-04
Gas – Steam Turbine	968	0.439	0.05	2.27E-05	0	0
Oil – Combined Cycle	1,330	0.603	0.013	5.90E-06	0.268	1.22E-04
Oil – Combustion Turbine	2,150	0.975	0.021	9.53E-06	0.276	1.25E-04
Oil – Steam Turbine	1,452	0.659	0.002	9.07E-07	0	0
Pulverized Coal	1,970	0.894	0.04	1.81E-05	0.34	1.54E-04
Wood Waste Biomass Boiler[b]	3,400	1.542	0.14	6.35E-05	0.55	2.49E-04
Municipal Solid Waste Boiler[a]	3,747	1.700	0.02	9.07E-06	0.55	2.49E-04
Geothermal[c]		0.122				
Renewables (wind, hydro, solar, and nuclear)	0	0	0	0	0	0

Source:

US Department of Energy, Sector-Specific Issues and Reporting Methodologies Supporting the General Guidelines for the Voluntary Reporting of Greenhouse Gases under Section 1605(b) of the Energy Policy Act of 1992, Volume I, DOE/PO-0028, Washington, D.C. October 1994.

[a] Under international GHG accounting methods developed by the Intergovernmental Panel on Climate Change, biogenic carbon is considered to be part of the natural carbon balance and it does not add to atmospheric concentrations of CO_2.

[b] Municipal solid waste normally contains inorganic materials—principally plastics—that contain carbon that is not biogenic. The proportion of plastics in municipal solid waste varies considerably depending on climate, season, socio-economic factors, and waste management practices. As a result, EIA does not estimate a non-biogenic carbon dioxide emission factor for municipal solid waste.

[c] Source: International Geothermal Association (Bertani and Thain, 2001).

The emission factors in Table 7-22 do not account for transmission or distribution losses. These losses are accounted for by the company who owns those lines. The emission factors do not count for geothermal power generation, which can have high concentrations of CO_2 emissions. The International Geothermal Association determined a 122 g/kW-hr rate during a study of international plants. This factor may be applied where applicable.

If the generator supplying power is located in the United States and the only information known is the fuel type, the EPA's E-GRID database can be used as an alternative to the approach stated above. The E-GRID factors can be applied to power generated to calculate emissions.

7.4.1.2 Steam/heat Calculations

Steam imported or generated onsite is formed from combustion. These emissions can be accounted for depending on what information is known about the source. Indirect emissions from using purchased heat or steam are described in Section II.9.2 of the Registry GRP, which is very similar to the approach provided in Section 4.7.2 of the API Compendium, except that the GRP assumes a default boiler efficiency of 75%, while the API Compendium assumes 92% to estimate these indirect emissions. The GRP and API Compendium approaches address CO_2, CH_4, and N_2O emissions. WRI/WBCSD's indirect CO2 emissions guidance document covers purchased steam CO_2 emissions (WRI/WBCSD, 2006). Section III.A of WRI/WBCSD's guidance document recommends converting the steam thermal rate (e.g. Btu) to power units (e.g., kWh). WRI/WBCSD does not provide steam-specific emission factors in their indirect CO_2 emissions guidance document, but it is implied that the electricity grid emission factors should be used.

7.4.2 Cooling Towers

Indirect emissions from purchased district cooling water are described in Section II.9.3 of the GRP. Purchased district cooling water has indirect emissions due to the electricity or fossil fuel combustion used to drive the compressor system that produces the cooling. These emissions are not covered by the API Compendium. Refer to Section II.9.3 of the GRP to estimate these indirect cooling water emissions

7.4.3 Other Indirect Emission Methods

Refineries must transport their products to marketing or distribution centers. The transportation of these fuels includes loading the petroleum products into vessels like tank trucks, rail tank cars, and marine vessels. The loading and transportation process result in evaporative losses that should be accounted for in a GHG inventory.

All of the methodologies in this section deal with feedstock/product transit, loading of product, and ballasting. The approaches require a known CH4 content to convert from TOC to CH_4 emissions. If the content is unknown a 15 wt% for crude is given in the EPA's AP-42 document. For other petroleum products the CH_4 content is much lower. Emissions from these activities should be reported if the CH_4 content is significant (>1%).

Feedstock/product transit

Emissions from the vessel transporting the petroleum product do occur. These emissions are very similar to emissions from storage tanks. The emissions are dependent on properties of the vessel and of the product in transit, including pressure inside the vessel, tightness of all valves and seals, and the vapor pressure of the product. The emission calculations for transit use the annual gallons transported, methane content, and emission factor from Table 7-27.

Table 7-27. Simplified TOC Emission Factors for Marine Transit Losses[a]

Units		Crude Oil[b]	Gasoline[c]
Original Units	lb TOC/week 10^3 gal transported mg TOC/week L transported	1.3 150	2.7 320
Converted Units	tonne TOC/week-10^6 gal transported[d] tonne TOC/week-10^3 m^3 transported[d]	0.57 0.150	1.21 0.320

Loading and ballasting

Emission estimates from loading are estimated using the known annual loading rate, the methane content in the fuel, and the emission factor from Table 7-28 and 7-29. Emission estimates from ballasting are very similar and use the annual ballast water throughput, the methane content of the vapors, and emission factors from Table 7-30. The factors in Table 7-29 are based how loaded the tank is. Table 7-31 provides simplified factors for gasoline.

Table 7-28. Simplified TOC Emission Factors for Loading Losses[a]

Loading Type	Units		Crude Oil[b]	Gasoline[c]
Rail / Truck Loading[d] Submerged Loading - Dedicated normal service	Original Units	lb TOC/10^3 gal loaded mg TOC/L loaded	2 240	5 590
	Converted Units	tonne TOC/ 10^6 gal loaded[f] tonne TOC/10^3 m^3 loaded[f]	0.91 0.240	2.23 0.590
Rail / Truck Loading[d] Submerged Loading - Vapor balance service	Original Units	lb TOC/10^3 gal loaded mg TOC/L loaded	3 400	8 980
	Converted Units	tonne TOC/ 10^6 gal loaded[f] tonne TOC/10^3 m^3 loaded[f]	1.51 0.400	3.71 0.980
Rail / Truck Loading[d] Splash Loading - Dedicated normal service	Original Units	lb TOC/10^3 gal loaded mg TOC/L loaded	5 580	12 1,430
	Converted Units	tonne TOC/ 10^6 gal loaded[f] tonne TOC/10^3 m^3 loaded[f]	2.20 0.580	5.41 1.430
Rail / Truck Loading[d] Splash Loading - Vapor balance service	Original Units	lb TOC/10^3 gal loaded mg TOC/L loaded	3 400	8 980
	Converted Units	tonne TOC/ 10^6 gal loaded[f] tonne TOC/10^3 m^3 loaded[f]	1.51 0.400	3.71 0.980
Marine Loading[e] - Ships/ocean barges	Original Units	lb TOC/10^3 gal loaded mg TOC/L loaded	0.61 73	See Table 5-11
	Converted Units	tonne TOC/ 10^6 gal loaded[f] tonne TOC/10^3 m^3 loaded[f]	0.28 0.073	
Marine Loading[e] - Barges	Original Units	lb TOC/10^3 gal loaded mg TOC/L loaded	1.0 120	See Table 5-11
	Converted Units	tonne TOC/ 10^6 gal loaded[f] tonne TOC/10^3 m^3 loaded[f]	0.45 0.120	

Source: EPA, AP-42, Section 5, Tables 5.2-5 and 5.2-6, 1995.

[a] The factors shown are for total organic compounds. AP-42 reports that the VOC comprises approximately 85% of the TOC for crude oil. Thus, a good, conservative assumption for the CH_4 content of the TOC is 15% in the absence of site-specific data. The emission factors for gasoline are for both TOC and VOC because AP-42 reports that the methane and ethane content of the loading emissions is negligible for these products.

[b] The example crude oil has an RVP of 5 psia.

[c] The example gasoline has an RVP of 10 psia.

[d] The rail/truck loading emission factors were derived using Equation B-5 assuming a liquid temperature of 60°F.

[e] Marine loading factors based on a loaded liquid temperature of 60°F.

[f] Converted from original emission factors provided in units of mg/L in AP-42. Thus, round-off errors may result in some small differences when converting from the emission factors provided in units of lb/10^3 gallons.

Table 7-19. TOC Emission Factors for Gasoline Loading at Marine Terminals[a]

Vessel Tank Condition	Previous Cargo[b]			Ships/Ocean Barges[c]	Barges[d]
Uncleaned	Volatile	Original Units	lb TOC/10^3 gal loaded mg TOC/L loaded	2.6 315	3.9 465
		Converted Units	tonne TOC/ 10^6 gal loaded [e] tonne TOC/10^3 m^3 loaded [e]	1.19 0.315	1.76 0.465
Ballasted	Volatile	Original Units	lb TOC/10^3 gal loaded mg TOC/L loaded	1.7 205	Barges are not typically ballasted
		Converted Units	tonne TOC/ 10^6 gal loaded [e] tonne TOC/10^3 m^3 loaded [e]	0.776 0.205	
Cleaned	Volatile	Original Units	lb TOC/10^3 gal loaded mg TOC/L loaded	1.5 180	No data
		Converted Units	tonne TOC/ 10^6 gal loaded [e] tonne TOC/10^3 m^3 loaded [e]	0.681 0.180	No data
Gas-freed	Volatile	Original Units	lb TOC/10^3 gal loaded mg TOC/L loaded	0.7 85	No data
		Converted Units	tonne TOC/ 10^6 gal loaded [e] tonne TOC/10^3 m^3 loaded [e]	0.322 0.085	No data
Any condition	Non-volatile	Original Units	lb TOC/10^3 gal loaded mg TOC/L loaded	0.7 85	No data
		Converted Units	tonne TOC/ 10^6 gal loaded [e] tonne TOC/10^3 m^3 loaded [e]	0.322 0.085	No data
Gas-freed	Any cargo	Original Units	lb TOC/10^3 gal loaded mg TOC/L loaded	No data	2.0 245
		Converted Units	tonne TOC/ 10^6 gal loaded [e] tonne TOC/10^3 m^3 loaded [e]	No data	0.93 0.245
Typical overall situation	Any cargo	Original Units	lb TOC/10^3 gal loaded mg TOC/L loaded	1.8 215	3.4 410
		Converted Units	tonne TOC/ 10^6 gal loaded [e] tonne TOC/10^3 m^3 loaded [e]	0.814 0.215	1.55 0.410

Source: EPA, AP-42, Section 5, Table 5.2-2, 1995.

[a] The factors shown are for both TOC and VOC because AP-42 reports that the methane and ethane content of the loading emissions is negligible.

[b] "Volatile" cargo refers to those liquids with a vapor pressure greater than 1.5 psia.

[c] AP-42 reports ocean barges (tank compartment depth of ~40 feet) exhibit emission levels similar to tank ships.

[d] Shallow draft barges (tank compartment depth of 10-12 feet) yield higher emissions than ocean barges.

[e] Converted from original emission factors provided in units of mg/L in AP-42. Thus, round-off errors may result in some small differences when converting from the emission factors provided in units of lb/10^3 gallons.

Table 7-20. Average TOC Emission Factors for Crude Oil Ballasting Operations

Compartment Condition Before Cargo Discharge	Average TOC Emission Factors, Original Units[a]		Average TOC Emission Factors, Converted to Tonnes[e]	
	lb TOC/10^3 gal ballast water	mg TOC/L ballast water	Tonne TOC/10^6 gal ballast water	Tonne TOC/10^3 m^3 ballast water
Fully loaded[b]	0.9	111	0.420	0.111
Lightered or previously short loaded[c]	1.4	171	0.647	0.171
Typical overall situation[d]	1.1	129	0.488	0.129

Source: EPA, AP-42, Section 5, Table 5.2-4, 1995.

[a] The factors shown are for total organic compounds. The average factors were derived assuming an average crude temperature of 60°F and a crude RVP of 5 psi. AP-42 reports that the VOC comprises an approximate average of 85% of the TOC for crude. Thus, a good assumption for the CH_4 content of the TOC is 15% in the absence of site-specific data.

[b] Based on assumed typical arrival ullage of 0.6 m (2 feet).

[c] Based on assumed typical arrival ullage of 6.1 m (20 feet).

[d] Typical overall situation based on the observation that 70% of tested compartments had been fully loaded before ballasting.

[e] Converted from original emission factors provided in units of mg/L in AP-42. Thus, round-off errors may result in some small differences when converting from the emission factors provided in units of lb/10^3 gallons.

Simplified emission factors for ballasting operations involving gasoline are provided in Table 5-13 (EPA, AP-42 Table 5.2-6, 1995).

Table 7-31. Simplified TOC Emission Factors for Gasoline Ballasting Losses[a]

Operation	Gasoline[b]
Tanker Ballasting	
lb TOC/10^3 gal ballast water	0.8
mg/L ballast water	100
tonne TOC/ 10^6 gal water[c]	0.379
tonne TOC/10^3 m^3 water[c]	0.100

Source: EPA, AP-42, Section 5, Table 5.2-6, 1995.

[a] The factors shown are for total organic compounds.

[b] The example gasoline has an RVP of 10 psia

[c] Converted from original emission factors provided in units of mg/L in AP-42. Thus, round-off errors may result in some small differences when converting from the emission factors provided in units of lb/10^3 gallons.

7.4.4 Indirect Source Method Evaluation

Indirect sources of emissions from petroleum refining operations are relatively low compared to combustion and some process sources. The general guidelines provided by the Registry in the General Reporting Protocol are adequate to determine indirect emissions from petroleum refining operations.

8.0 GHG Emissions Reporting Considerations

8.1 CO_2-equivalent emissions

Carbon dioxide is the most significant GHG constituent for the petroleum refining sector. Small amounts of methane may be vented from crude storage tanks, fugitive equipment components, and from combustion sources due to incomplete combustion. Nitrous oxide emissions will also result from stationary and mobile combustion sources, but the relative magnitude is very low. However, some NOx controls lead to increased N_2O emissions, especially for selective catalytic reduction (SCR) systems for controlling refinery combustion sources.

Air conditioning, refrigeration, and fire suppression equipment are small sources of hydrofluorocarbons (HFCs) and perfluorocarbons (PFCs) emissions.

Estimation of CO_2 equivalent emissions is straightforward and is based the product of the mass emission rate and the global warming potential of the GHG constituent. This is a consistent approach across international protocols, including the Registry General Reporting Protocol.

8.2 De Minimis and Materiality considerations

For sources that do not materially contribute to the overall GHG emissions from a petroleum refinery, there are several options for reporting de minimis sources:

- List the de minimis sources that are acceptable for exclusion;
- Reporting entities must demonstrate that sources are de minimis and requantify on 3 yearly basis (EU ETS approach)
- Reporting entities report all sources, even de minimis sources

A listing of the sources that could be considered as de minimis because they are not material contributors to GHG inventory from a petroleum refinery is provided in Table 8-1;

- Fire water pumps
- Fire extinguisher training
- Emergency generators

Table 8-1 presents the emission sources that could be considered as de minimis for petroleum refining operations.

Table 8-1. Potential de Minimis Emission Sources from Petroleum Refining

Potential de Minimis Emission Source	Potential de Minimis GHG Constituents	Comment
Stationary combustion sources	CH_4, N_2O	Although insignificant, the activity data used for CH4 emissions estimation are generally the same as for CO_2. Thus the level of effort to report CH_4 and N_2O from combustion sources is small.
Mobile combustion sources	CH_4, N_2O	Mobile source CH_4 and N_2O emissions are not

Potential de Minimis Emission Source	Potential de Minimis GHG Constituents	Comment
		significant.
Flares	CH_4, N_2O	Flare emissions of CH_4 and N_2O are not significant.
Fugitive sources	CH4	Fugitive emission sources of GHG from equipment components at a refinery are not significant.
Purchased electricity	CH_4, N_2O	CH_4 and N_2O emissions are estimated using the same activity data (MWhr) as CO_2. However, CH_4 and N_2O emissions are insignificant.
Fire extinguishers	HFCs, PFCs	Emissions from fire extinguishers are insignificant.
Chillers Mobile air conditioning units Stationary refrigeration/AC	HFCs, PFCs	The steps provided in Part III Chapter 11 of the GRP can be used to determine if HFC emissions from refrigeration and cooling units are de minimis.
Anaerobic wastewater treatment	CH_4	Emissions of CH_4 from anaerobic wastewater treatment and cooling towers are insignificant.
Aerobic wastewater treatment	CO_2	Any non-biogenic carbon treated in the wastewater system would be converted to CO_2. However, emission estimation methods generally do not address CO_2 emissions from aerobic wastewater treatment.

8.3 Industry specific efficiency metrics

Greenhouse gas emissions for petroleum refining are typically expressed both in terms of absolute emissions and on an emissions intensity basis. The industry-specific metric for reporting emissions intensity is most commonly expressed as:

- tonnes CO_2 equivalent emissions/barrel oil equivalent.

The denominator, barrels oil equivalent, is a standard industry metric used to track operational performance, taking into account differences in crude oil quality. This overall emissions intensity is used to track performance on a year-on-year basis, where organic growth or decline in production may occur.

At an equipment or process unit level, tracking emissions at an equipment level may provide the ability to identify emissions reduction opportunities and track reduction project performance. Refineries report their energy efficiency metrics on a confidential basis for inclusion in the Solomon Index benchmarking.

8.4 Other Optional Reporting

Other activities that a company may choose to report with their GHG inventory include:

- **Reporting other indirect emissions**. A company may choose to report other indirect emissions from non-energy activities outside of their organizational boundary. This is particularly true for support operations, such as hydrogen production, that are core to the refinery operations but not owned or operated by the refinery entity.
- **Purchases and sales of GHG emission reductions**. A company may wish to report emissions associated with reduction activities. Ideally, these activities would be captured in the inventory. However, there is a possibility that the emission estimation methodologies used for the inventory are not sufficiently detailed to reflect the reduction activity. Note that the reductions should not be netted from the inventory total, but a company may choose to report them separately. At a minimum, the company should describe the reduction activity and report the quantity of emission reduction. It should be noted if the emission reductions were purchased or sold, and it should be noted if the reductions were reported to other registries and/or regulatory agencies.
- **Technology or Process Improvements.** Companies may want to highlight GHG emission reductions that are attributable to directed action taken by companies to improve energy efficiency. These actions could include: ultra low emission process heater technology, combustion tuning to improve efficiency, introduction of new processing technologies, etc. When reporting on such activities it is important to note whether those are continuous or discrete activities and if the resultant emission reductions were reported to other registries or regulatory agencies.
- **Contractual agreements assigning or limiting liability**. Companies may have contractual arrangements that specifically address the ownership of GHG emissions. It would be useful to report information associated with any contractual agreements that assign ownership of emissions or limit liability associated with specific emissions, particularly where these agreements differ from commonly recognized organizational boundary approaches (i.e., equity share or operational control).

9.0 Certification/Verification

For activities not unique to petroleum refining operations, certification guidance is provided in the General Reporting and Certification Protocols available through the Registry. Greenhouse gas emissions verification for petroleum refining operations involves a desk review of the reported data, methodologies applied, and estimated figures, as well as activities conducted on site. A GHG verifier will normally identify potential issues identified during the desk review to be confirmed on site, and will conduct an assessment to determine the sources with the most risk of contributing to overall uncertainties in the reported data (or overall risk of material misstatements). The verification process will typically include:

- Document and evidence review
- Site walk through to check the completeness of the source list
- Interviews with key refinery personnel to understand the management systems and controls in place to ensure data quality. Interview may be conducted with:
  - Plant manager – oversight and review of GHG reports
  - EHS manager – review of GHG data
  - On-site data coordinator – reporting process and data sources
  - Laboratory personnel – analytical QA practices and LIMS data input process
  - Energy coordinator – flaring estimates, if not measured
  - Process engineers/operators – data reviews and quality assurance; reconciled data procedures
  - Hydrocarbon accounting – HC mass/energy balance data reconciliation procedures
  - Maintenance – instrument/meter calibration procedures and records
- Review of methods, data trail and calculations
- Quantifying uncertainties in reported data

A closing meeting will typically be conducted by the verification team to communicate the strengths and weaknesses found during the verification activities, as well as to discuss any non-conformities that must be addressed by the site prior to completion of the verification activities.

9.1 Documents and Information to Review

The following table provides documentation and sources of information that can be used to confirm that petroleum refinery GHG emissions have been reported accurately.

Table 9-1 Sources of Documentation

Activity or Emission Source	Documents
Step 1: Identify Emission Sources	
Emission Source Inventory	– CARROT Report

Activity or Emission Source	Documents
	– Facility inventory – List of permitted equipment – Facility plot plans or process flow diagrams – Fuel purchase records by fuel type, as appropriate – Electricity consumption records – Risk management plan
Organizational, Operational, and Geographic Boundaries	– Corporate Annual Reports – Information available on entity web – List of contracted activities
Step 2: Understand Management Systems and Methodologies	
Data Management Systems	– Type of data collection systems and parameters tracked – Data acquisition and handling system – Data collection, management processes and controls in place
Responsibilities and Management	– Responsibility matrix for data management – Documentation and retention plan
Training	– Training and or Procedures/Protocol Manual – Training materials
Methodologies	– Company GHG Protocol – Other protocols or emission factors used (in addition to the GRP) – Meter calibration procedures – Quality Assurance/Quality Control plans
Step 3: Verifying Emission Estimates	
General	– Emissions reports, including underlying data and estimation methods/algorithms
Direct emissions from stationary combustion	– Metered volumes – Fuel meter calibration and maintenance records – Gas analyses and sampling frequency – Fuel purchase records – Fuel in stock – Operating hours and equipment ratings (for non-metered equipment) – Flare records (volumes, gas composition) – Hydrocarbon accounting records/reconciled data records – Data historian reports of input data – Operational logs, if needed
Direct emissions from mobile combustion sources	– Fuel purchase records – Fuel in stock – Vehicle miles traveled – Inventory of vehicles
Direct emissions from process vents	– Specific to vented source
Direct emissions from fugitive sources	– Leak detection and repair program records – Wastewater treatment records (COD, BOD, volumes)
Direct fugitive (or venting)	– Refrigerant purchase records

Activity or Emission Source	Documents
emissions from air conditioning and refrigeration systems (stationary and mobile)	– Maintenance records for refrigerant equipment – Refrigerant exchanges, sales or recycle records
Indirect emissions from purchased electricity, heat, or steam	– Monthly utility bills – Fuel and efficiency data from suppliers (if available) – Emission factors (if not default)

9.2 Questions to Consider in Verifying Emissions Estimates

The following are specific questions for verifiers of petroleum refinery GHG inventory data to consider as part of the verification process:

- Is the source list comprising the inventory complete? Are all material sources captured?
- Are the methodologies used to quantify emissions of appropriate accuracy based on the materiality of the source?
- What is the configuration of the refinery fuel gas system and are sample points appropriate for representative composition? How frequently is refinery fuel gas sampled? How much variability in composition over reporting period? Is the sampling frequency adequate for representative gas composition over reporting period?
- Are flare gas flows and compositions measured? How frequently?
- Are the meters that measure the most material source streams calibrated?

10.0 Quality Assurance

A quality assurance process is a fundamental component of a reliable GHG inventory. Many environmental reporting systems are already in place in a typical refinery to support the environmental reporting required from federal, state, and local jurisdictions. Most of the underlying data to support GHG emissions reporting from refining operations are collected in systems for other environmental reporting purposes (e.g., air emissions inventory reporting) or for process control.

Uncertainties in the reported GJG data arise from:

- Completeness of the inventory and any source exclusions that may make a significant impact on the overall reported data;
- Accuracy of the methodology used to quantify emissions. The absolute uncertainty associated with a source is directly related to its contribution to emissions. More accurate methods should be used for the sources that contribute the most to the overall emissions, whereas smaller sources can have larger uncertainties without a significant impact on materiality;
- Uncertainties in the underlying data, such as instrument accuracy based on calibrations and performance checks; and
- Potential weaknesses in the data management systems in place to control the quality of the data throughout the collection, reporting, and management processes.
- Quality assurance/quality control (QA/QC) procedures should be designed to identify weaknesses and sources of error or uncertainty in data and management systems, implement procedures to reduce uncertainty, and improve the overall quality of the data and reliance that stakeholders can place on it.

Key components of a quality management system include:

- A QA/QC organizational structure, with clearly defined roles and responsibilities;
- Personnel training to ensure a clear understanding of the importance of reliable GHG data, compliance with the Unocal protocol, and understanding of the quality assurance process and specific activities;
- Internal second party technical reviews of the quantification methodologies, data inputs, unit conversions, and data processing steps. Suggested personnel to perform second party reviews would include process engineer(s) knowledgeable of the operations, processes, and data sources, energy coordinator, and/or operations personnel.
- Periodic internal audits aligned with the business management system within a refinery.
- Review and benchmarking of intensity ratios and year-on-year data trends, broken down by key emission source categories, such as stationary combustion, flaring, venting, and fugitives for the BU; and

- Document any problems identified, recommendations for corrective action, and implementation results.
- Second party technical reviews are particularly important to ensure proper methodologies, calculations and conversions, and data sources are utilized. The key areas of focus for the second party technical review process, include year-on-year comparisons, cross checks of data using multiple methods, comparing the inventory against source checklists, internal benchmarking against similar operations, confirmation of the boundaries selection, etc. These quality measures include:
- Any default emission factors should be investigated to ensure that they properly represent the emissions of the given source. Site-specific factors are often more reliable than generic, published emission factors and should be compared with the default emission factors.
- Measures should be implemented to ensure the accuracy of the activity data used in the inventory. For example, data should be collected from metered or measured sources such as from purchase records or company measurements. Year-to-year comparisons of the activity data should be made to identify any quality issues. Activity data obtained from multiple sources should be compared, and the activity data itself should be evaluated to see that it is appropriate for the accuracy needed for a GHG inventory. Any biases in the activity data should be identified, and recommended corrective actions developed and implemented.
- The emissions estimates for source categories should be compared with historical data or other estimates to see if they fall within a reasonable range. For example, any emission changes over 5-10 % from the previous year may warrant further investigation into the basis of the estimates.

Table 10-1 provides an indicative list of actions to consider to ensure quality data.

Table 10-1. Quality Management Actions to Ensure Reliable GHG Reporting

Control Level	Quality Management Actions
Management Controls	Clear roles and responsibilities established for the accounting and reporting of GHG emissions at the facility, Business, and Corporate levels.
	Responsible persons adequately trained to understand and implement this protocol.
	Environmental management systems in place to support a quality assurance process.
	Internal audits and technical reviews to identify areas of improvement.
	Adequate controls (i.e., review and check procedures) over reported GHG data at facility, business, and corporate levels.
Facility Level	Formalize second party review and management sign off procedures
	Maintain documentation and archival of source data

Control Level	Quality Management Actions
Controls	Confirm that any new data sources are added to the inventory, and any data sources that are no longer relevant are not included.
	Document changes in data or methodologies, along with rationale for change.
	Check a sample of input data for transcription and other sources of error.
	Confirm that the methodologies used to quantify emissions from the most significant sources are appropriate and accurate.
	Confirm that activity data units of measure (UOM) are consistent between activity data and corresponding emission factors.
	Confirm that key source data (e.g., fuel flow rates, fuel composition, gas composition) are supported by appropriate monitoring and calibration regimes.
	Confirm that highly variable, site specific data on fuel composition is sampled on an appropriate frequency.
	Ensure clear understanding of uncertainties associated with emissions estimation methodologies and source data. Continuous improvement measures should strive to minimize uncertainties for the most significant sources.
	Check that assumptions and criteria for selection of methods, activity data, emission factors, and other parameters are documented.
	Check that changes in data or methodologies are documented, and have been performed consistent with appropriate change management procedures.
Corporate level controls	Ensure that personnel training, communications, and change management procedures are implemented.
	Check that copies of cited references have been archived.
	Ensure that adequate version control procedures for any written methodologies or electronic files have been implemented.
	Identify GHG inventory process modifications or improvements that could provide additional controls over data quality.
	Check that entities' boundaries and status of control and ownership are correct.
	Review the GHG inventory for the current reporting period against historical performance and forecasts.
	Perform periodic reviews and updates of this protocol, as necessary, to ensure continued appropriateness of the guidelines.
Data management systems	To the extent possible, integrate the GHG data collection and reporting procedures into the environmental and/or operational management system within the business.
	Maintain references to methodologies used, emission factors, etc. to provide a verifiable data trail.

Control Level	Quality Management Actions

11.0 Acronyms

AB 32	Assembly Bill 32
AGO	Australian Greenhouse Office
API	American Petroleum Institute
ARPEL	Atmospheric Emissions Inventories Methodologies in the Petroleum Industry
BAAQMD	Bay Area Air Quality Management District
BOD	Biological Oxygen Demand
CAPP	Canadian Association of Petroleum Producers
CARB	California Air Resources Board
CCAR	California Climate Action Registry
CCU	Catalytic Cracking Unit
CEC	California Energy Commission
CEMS	Continuous Emissions Monitoring System
CHIEF	Clearinghouse Inventories and Emission Factors
CIEEDAC	Canadian Industrial Energy End-use Data and Analysis Centre
CMA	Chemical Manufacturing Association
COD	Chemical Oxygen Demand
CPPI	Canadian Petroleum Products Institute
CRR	Catalyst Regeneration Rate
DCS	Distributed Control System
DEA	Diethanolamine
DEFRA	United Kingdom Department of Environment and Food Regulatory Authority
DOE	United States Department of Energy
EEA	European Environment Agency
EIA	Energy Information Administration
EIIP	Emission Inventory Improvement Program
EPA	United States Environmental Protection Agency
ETS	Emissions Trading Scheme
EU	European Union
FCCU	Fluidized Catalytic Cracking Unit
GC	Gas Chromatography
GHG	Greenhouse Gas
GRP	General Reporting Protocol
HAP	Hazardous Air Pollutant

HDDV	Heavy-duty Diesel Vehicles
HDGV	Heavy-duty Gasoline Vehicles
HFCs	Hydrofluorocarbons
HHV	Higher Heating Value
HON (used in SOCMI "HON")	Hazardous Organic National Emission Standards
IPCC	Intergovernmental Panel on Climate Control
IPIECA	International Petroleum Industry Environmental Conservation Association
LDAR	Leak Detection and Repair
LDDA	Light-duty Diesel Automobiles
LDDT	Light-duty Diesel Trucks
LDGA	Light-duty Gasoline Automobiles
LDGT	Light-duty Gasoline Vehicles
LHV	Lower Heating Value
LIMS	Laboratory Information Management System
LPG	Liquified Petroleum Gas
MACT	Maximum Achievable Control Technology
MDEA	Methyl Diethanolamine
mpg	Miles per gallon
MTBE	Methyl Tertiary Butyl Ether
NAICS	North American Industrial Classification System
NESHAP	National Emissions Standards for Hazardous Air Pollutants
NSPS	New Source Performance Standards
PFCs	Perfluorocarbons
PIIRA	Petroleum Industry Information Reporting Act
PM	Particulate Matter
PSD	Prevention of Significant Deterioration
QA	Quality Assurance
QC	Quality Control
SCOT	Shell Claus Offgas Treating
SCR	Selective Catalytic Reduction
SIC	Standard Industrial Classification
SOCMI	Synthetic Organic Chemical Manufacturing Industry
THC	Total Hydrocarbon
TOC	Total Organic Compounds
UOM	Unit of Measure
VOC	Volatile Organic Compound

WBCSD	World Business Council for Sustainable Development
WRI	World Resources Institute

12.0 References

Alberta Research Council, *Refinery Demonstration of Optical Technologies for Measurement of Fugitive Emissions and for Leak Detection*, March 31, 2006.

American Petroleum Institute, *Compendium of Greenhouse Gas Emissions Estimation Methods for the Oil and Gas Industry*, 2004.

Bay Area Air Quality Management District, *Source Inventory of Bay Area Greenhouse Gas Emissions*, November 2006.
http://www.baaqmd.gov/pln/ghg_emission_inventory.pdf

Bay Area Air Quality Management District, A Review of Experiences Using DIAL Technology to Quantify Atmospheric Emissions at Petroleum Facilities, Final Report Proposed Amendments Regulation 8 Rule 18: Equipment Leaks Control Measure SS-16, January 2004.
www.baaqmd.gov/pln/ruledev/8-18/2004/0818_sr_jan2004.pdf

California Air Resources Board, *Refinery Demonstration of Optical Techniques for Measurement of Fugitive Emissions and for Leak Detection*, A Chambers and M. Strosher, available at: www.arc.ab.ca/ARC-Admin/UploadedDocs/Dial%20Final%20 Report%20Nov06.pdf

California Air Resources Board, *AB 32 and California's Petroleum Refinery Sector*, presentation on Greenhouse Gas Mandatory Reporting and Statewide Inventory, Technical Discussion, April 24, 2007.

California Climate Action Registry. *General Reporting Protocol, Reporting Entity-Wide Greenhouse Gas Emissions*, Version 2.1, June 2006.

California Energy Commission, *Inventory of California Greenhouse Gas Emissions and Sinks: 1990 to 2004*, December 2006.

Commission of the European Communities, Commission Decision of 29/01/2004, *establishing guidelines for the monitoring and reporting of greenhouse gas emissions* pursuant to Directive 2003/87/EC of the European Parliament, 2006.

Department of Energy (DOE), *Technical Guidelines Voluntary Reporting of Greenhouse Gases (1605(b))*, January 2007.

European Commission Directive 2003/87/EC, *establishing a scheme for greenhouse gas emissions allowance trading within the Community and amending Council Directive 96/61/EC.*

International Petroleum Industry Environmental Conservation Association (IPIECA), API, *Petroleum Industry Guidelines for Reporting Greenhouse Gas Emissions*, 2003.

Petroleum Environmental Research Forum, The Origin and Fate of Toxic Combustion Byproducts in Refinery Heaters: Research to Enable Efficient Compliance with the Clean Air Act, Project 92-19, August 5, 1997.

Texas Commission on Environmental Quality (TCEQ), *Air Permit Technical Guidance for Chemical Sources: Sulfur Recovery Units*, September 2000.

U.K. Department of Environment, Food, and Rural Affairs (DEFRA), *EU Emissions Trading Scheme, Guide Note 1, Guidance on Inclusion, Updated for Phase II*, March 31, 2006

U. S. Department of Energy, Energy Information Administration, *Refinery Capacity 2006, Table 3. Capacity of Operable Petroleum Refineries by State as of January 1, 2006*.

U.S. Environmental Protection Agency, *Fact Sheet, Final Rule to Reduce Toxic Air Emissions from Petroleum Refineries: Catalytic Cracking Units, Catalytic Reforming Units, and Sulfur Recovery Units*, March 2002.

U.S. Environmental Protection Agency, *DIAL Measurements of Fugitive Emissions from Natural Gas Plants and the Comparison with Emission Factor Estimates*, A.K. Chambers et al., available at: www.epa.gov/ttn/chief/conference/ei15/session14/ chambers.pdf

U.S. Environmental Protection Agency, *VOC Fugitive Losses: New Monitors, Emission Losses, and Potential Policy Gaps*, 2006 International Workshop, Washington, DC, October 25-27, 2006. www.epa.gov/ttn/chief/efpac/projects.html

U. S. Environmental Protection Agency Office of Compliance Sector Notebook Project, *Profile of the Petroleum Refining Industry*, September 1995.

World Resources Institute (WRI)/World Business Council for Sustainable Development (WBCSD), *The Greenhouse Gas Protocol: a Corporate Accounting and Reporting Standard*, Revised Edition, 2003.

Other website references:

http://www.energy.ca.gov/oil/refineries.html

http://www.energy.ca.gov/maps/refinery_locations.htm

http://www.arb.ca.gov/fuels/carefinery/carefinery.htm

http://en.wikipedia.org/wiki/Petroleum_refining

Annex A

Biofuels

Annex B

NAICS Petroleum Refinery Description

Appendix B

NAICS Petroleum Refining Description

2002 NAICS	1987 SIC	Corresponding Index Entries
324110	2911	Acid oils made in petroleum refineries
324110	2911	Aliphatic chemicals (i.e., acyclic) made in petroleum refineries
324110	2911	Alkylates made in petroleum refineries
324110	2911	Asphalt and asphaltic materials made in petroleum refineries
324110	2911	Asphalt paving mixtures made in petroleum refineries
324110	2911	Aviation fuels manufacturing
324110	2911	Benzene made in petroleum refineries
324110	2911	Butylene (i.e., butene) made in petroleum refineries
324110	2911	Coke, petroleum, made in petroleum refineries
324110	2911	Crude oil refining
324110	2911	Crude petroleum refineries
324110	2911	Cumene made in petroleum refineries
324110	2911	Cyclic aromatic hydrocarbons made in petroleum refineries
324110	2911	Diesel fuels manufacturing
324110	2911	Ethylene made in petroleum refineries
324110	2911	Fuel oils manufacturing
324110	2911	Fuels, jet, manufacturing
324110	2911	Gasoline made in petroleum refineries
324110	2911	Heating oils made in petroleum refineries
324110	2911	Hydraulic fluids made in petroleum refineries
324110	2911	Jet fuels manufacturing
324110	2911	Kerosene manufacturing
324110	2911	Liquefied petroleum gas (LPG) made in refineries
324110	2911	Lubricating oils and greases made in petroleum refineries
324110	2911	Naphtha made in petroleum refineries
324110	2911	Naphthenic acids made in petroleum refineries
324110	2911	Oil (i.e., petroleum) refineries
324110	2911	Oil additives made in petroleum refineries
324110	2911	Oils, fuel, manufacturing
324110	2911	Paraffin waxes made in petroleum refineries

324110	2911	Petrochemical feedstocks made in petroleum refineries
324110	2911	Petrochemicals made in petroleum refineries
324110	2911	Petroleum coke made in petroleum refineries
324110	2911	Petroleum cracking and reforming
324110	2911	Petroleum distillation
324110	2911	Petroleum jelly made in petroleum refineries
324110	2911	Petroleum lubricating oils made in petroleum refineries
324110	2911	Petroleum refineries
324110	2911	Propane gases made in petroleum refineries
324110	2911	Propylene (i.e., propene) made in petroleum refineries
324110	2911	Refineries, petroleum
324110	2911	Refinery gases made in petroleum refineries
324110	2911	Road oils made in petroleum refineries
324110	2911	Solvents made in petroleum refineries
324110	2911	Still gases made in petroleum refineries
324110	2911	Styrene made in petroleum refineries
324110	2911	Tar made in petroleum refineries
324110	2911	Toluene made in petroleum refineries
324110	2911	Waxes, petroleum, made in petroleum refineries
324110	2911	Xylene made in petroleum refineries