1110 NASA Parkway, Suite 212
Houston, TX 77058
(P) 281-333-3339
(F) 281-333-3386

March 6, 2014

Mr. Ned Jerabek
New Mexico Environment Department
Air Quality Bureau
525 Camino de los Marquez, Suite 1
Santa Fe, New Mexico, 87505-1816

RE: Air Permit Amendment Application
Permit No. PSD 3449-R6
Hobbs Generating Station
Hobbs, New Mexico

Dear Mr. Jerabek,

On behalf of Lea Power Partners, CAMS eSPARC is submitting the attached Air Permit Amendment Application for your consideration. A detailed BACT Review, Modeling Waiver Request, and Monitoring Waiver Request were submitted to the NMED for review on February 13, 2014.

Hobbs is proposing a significant revision to NSR Permit PSD 3449-R6 to allow an upgrade to both combustion turbine generators (CTGs), which will increase power by approximately 5% to 6%. Although NO_X, CO and VOC concentrations from the turbine exhaust will remain constant, there will be an increase in actual mass emission rates (past actual vs. future allowable) of these pollutants due to the increased exhaust flow rate compared to historical values. Increases in actual particulate matter (PM_{10} and $PM_{2.5}$) and SO_2 emission rates are also expected due to the increased fuel consumption. However, there will be no need to increase the current short-term permit allowable emission rates due to the planned upgrade. A minor increase in the VOC short and long term mass emission rates is requested to address a representation error in the original permit application. Also, estimates of annual mass emission rates and short-term pollutant concentrations due to startup and shutdown are updated.

We are also requesting a detailed review of the PSD-3449 permit conditions. During the development of this permit amendment application, it was noted that a number of permit conditions were updated in the latest revision to the Title V Permit (P244-M4), including but not limited to A.401, A402, Part B General Conditions, and Part C Miscellaneous. Since no corresponding updates were made to the PSD permit at the time, for consistency, we request that all conditions be updated in the amended PSD-3449 permit.

After you have a chance to review the attached document, and prior submittals, we would appreciate the opportunity to meet with you and the NMED permitting team to discuss the best way to streamline our application process and address any questions you may have.

Please contact me at (281) 333-3339 x201 or via email at mjohnson@camsesparc.com or Michael Barnett at (575) 397-6731 or via email at mbarnett@camsops.com if you have any questions or need additional information.

Sincerely,

Mona Caesar Johnson, P.E.
CAMS eSPARC, LLC

cc:

Region 6
Environmental Protection Agency
1445 Ross Avenue, Suite 1200
Dallas, Texas 75202

Air Permits Division MC-163
Texas Commission on Environmental Quality
12100 Park 35 Circle, Building C
Third Floor
Austin, TX 78753

Roger Schnabel
Hobbs Generating Station
98 N. Twombly Lane
Hobbs, NM 88242

Matt Lindsey
Consolidated Asset Manager Services
919 Milam Street, Suite 2300
Houston, TX 77002

Mail Application To:		**For Department use only:**
New Mexico Environment Department Air Quality Bureau Permits Section 525 Camino de los Marquez, Suite 1 Santa Fe, New Mexico, 87505 Phone: (505) 476-4300 Fax: (505) 476-4375 www.nmenv.state.nm.us/aqb		AIRS No.:

Universal Air Quality Permit Application

Use this application for NOI, NSR, or Title V sources.

Use this application for: the initial application, modifications, technical revisions, and renewals. For technical revisions, complete Sections, 1-A, 1-B, 2-E, 3, 9 and any other sections that are relevant to the requested action; coordination with the Air Quality Bureau permit staff prior to submittal is encouraged to clarify submittal requirements and to determine if more or less than these sections of the application are needed. Use this application for streamline permits as well. For NOI applications, submit the entire UA1, UA2, and UA3 applications on a single CD (no copies are needed). For NOIs, hard copies of UA1, Tables 2A, 2D & 2F, Section 3 and the signed Certification Page are required.

This application is being submitted as (check all that apply): ☐ Request for a No Permit Required Determination (no fee)
☐ **Updating** an application currently under NMED review. Include this page and all pages that are being updated (no fee required).
Construction Status: ☐ Not Constructed ☒ Existing Permitted (or NOI) Facility ☐ Existing Non-permitted (or NOI) Facility
Minor Source: ☐ a NOI 20.2.73 NMAC ☐ 20.2.72 NMAC application/revision ☐ 20.2.72.300 NMAC Streamline application
Title V Source: ☐ Title V (new) ☐ Title V renewal ☐ TV minor mod. ☐ TV significant mod. TV Acid Rain: ☐ New ☐ Renewal
PSD Major Source: ☐ PSD major source (new) ☐ minor modification to a PSD source ☒ a PSD major modification

Acknowledgements: ☒ I acknowledge that a pre-application meeting is available to me upon request ☐ NPR (no fee)
☒ $500 NSR Permit Filing Fee enclosed OR ☐ The full permit fee associated with 10 fee points (required w/ streamline applications).
☒ Check No.:7368 in the amount of $500 (Fee not required for Title V) ☐ This facility meets the applicable requirements to register as a Small Business and a check for 50% of the normal fee is enclosed (only applicable **provided** that NMED has a Small Business Certification Form from your company on file found at: http://www.nmenv.state.nm.us/aqb/permit/app_form.html).

Citation: Please provide the **low level citation** under which this application is being submitted: **20.2.72.200.A(2) NMAC and 20.2.74.200.A NMAC.**
(i.e. an example of an application for a new minor source would be 20.2.72.200.A NMAC, one example of a low level cite for a Technical Revision could be: 20.2.72.219.B.1.b NMAC, or a Title V acid rain cite would be: 20.2.70.200.C NMAC)

Synthetic Minor Source Information: A source is synthetic minor if its uncontrolled emissions are above major source applicability thresholds, but the facility is minor because it has federally enforceable requirements (federal requirements or permit conditions) that limit controlled emissions below major source thresholds. Facilities can be synthetic minor for either Title V (20.2.70 NMAC) or PSD (20.2.74 NMAC) or both. The Department tracks synthetic minor sources that are within 20% of either TV or PSD major source thresholds, referring to these as Synthetic Minor 80 Sources (abbreviated SM80). Please check all that apply:
Prior to this permitting action this source is a ☐ TV major source, ☐ a TV synthetic minor source, ☐ a TV SM80 source.
Prior to this permitting action this source is a ☐ PSD major source, ☐ a PSD synthetic minor source, ☐ a PSD SM80 source.
This permitting action results in a ☐ TV synthetic minor source and/or ☐ PSD synthetic minor source.

Section 1 – Facility Information

Section 1-A: Company Information

		AI # (if known): 25726	Updating Permit/NOI #: PSD 3449-R6
1	Facility Name: Hobbs Generating Station	Plant primary SIC Code (4 digits): 4911	
a	Facility Street Address (If no facility street address, provide directions from a prominent landmark): 98 N. Twombly Lane, Hobbs, NM 88242		
2	Plant Operator Company Name: CAMS (New Mexico), LLC	Phone/Fax: (575) 397-6706 / (575) 397-6793	
a	Plant Operator Address: 98 N. Twombly Lane, Hobbs, NM 88242		
b	Plant Operator's New Mexico Corporate ID or Tax ID: 260471741		
3	Plant Owner(s) name(s): Lea Power Partners, LLC, c/o Mr. David Baugh	Phone/Fax: (713) 358-9733 / (713) 358-9730	

a	Plant Owner(s) Mailing Address(s): 98 N. Twombly Lane, Hobbs, NM 88242	
4	Bill To (Company): Mr. Roger Schnabel	Phone/Fax: (575) 397-6706 / (575) 397-6793
a	Mailing Address: 98 N. Twombly Lane, Hobbs, NM 88242	E-mail: rschnabel@camstex.com
5	☐ Preparer: ☒ Consultant: CAMS eSPARC, Mona Caesar Johnson, P.E.	Phone/Fax: (281) 333-3339/ (281) 333-3386
a	Mailing Address: 1110 Nasa Parkway, Suite 212, Houston, TX 77058	E-mail: mjohnson@camsesparc.com
6	Plant Operator Contact: Mr. Roger Schnabel	Phone/Fax: (575) 397-6706 / (575) 397-6793
a	Address: 98 N. Twombly Lane, Hobbs, NM 88242	E-mail: rschnabel@camstex.com
7	Air Permit Contact: Mr. Roger Schnabel	Title: Plant Manager
a	E-mail: rschnabel@camstex.com	Phone/Fax: (575) 397-6706 / (575) 397-6793
b	Mailing Address: 98 N. Twombly Lane, Hobbs, NM 88242	

Section 1-B: Current Facility Status

1.a	Has this facility already been constructed? ☒ Yes ☐ No	1.b If yes to question 1.a, is it currently operating in New Mexico? ☒ Yes ☐ No
2	If yes to question 1.a, was the existing facility subject to a Notice of Intent (NOI) (20.2.73 NMAC) before submittal of this application? ☒ Yes ☐ No	If yes to question 1.a, was the existing facility subject to a construction permit (20.2.72 NMAC) before submittal of this application? ☒ Yes ☐ No
3	Is the facility currently shut down? ☐ Yes ☒ No	If yes, give month and year of shut down (MM/YY):
4	Was this facility constructed before 8/31/1972 and continuously operated since 1972? ☐ Yes ☒ No	
5	If Yes to question 3, has this facility been modified (see 20.2.72.7.P NMAC) or the capacity increased since 8/31/1972? ☐Yes ☐No ☐N/A	
6	Does this facility have a Title V operating permit (20.2.70 NMAC)? ☒ Yes ☐ No	If yes, the permit No. is: P-244-M4
7	Has this facility been issued a No Permit Required (NPR)? ☐ Yes ☒ No	If yes, the NPR No. is:
8	Has this facility been issued a Notice of Intent (NOI)? ☐ Yes ☒ No	If yes, the NOI No. is:
9	Does this facility have a construction permit (20.2.72 NMAC)? ☒ Yes ☐ No	If yes, the permit No. is: PSD 3449-R6
10	Is this facility registered under a General permit (GCP-1, GCP-2, etc.)? ☐Yes ☒ No	If yes, the register No. is:

Section 1-C: Facility Input Capacity & Production Rate

1	What is the facility's maximum input capacity, specify units (reference here and list capacities in Section 20, if more room is required)			
a	Current	Hourly: 3,830 MMBtu/hr (LHV)	Daily: 91,920 MMBtu/Day (LHV)	Annually: 29,535,551MMBtu/yr (LHV)
b	Proposed	Hourly: 4,054 MMBtu/hr (LHV)	Daily: 97,296 MMBtu/Day (LHV)	Annually: 29,733,701 MMBtu/yr (LHV)
2	What is the facility's maximum production rate, specify units (reference here and list capacities in Section 20, if more room is required)			
a	Current	Hourly: 600 MW nominal	Daily: 14,400 MW nominal (Hourly * 24)	Annually: 5,256,000 MW nominal (Daily * 365)
b	Proposed	Hourly: 625 MW nominal	Daily: 15,004 MW nominal (Hourly * 24)	Annually: 5,476,489 MW nominal (Daily * 365)

Section 1-D: Facility Location Information

1	Section: 24	Range: 36E	Township: 18S	County: Lea	Elevation (ft): 3,716
2	UTM Zone: ☐ 12 or ☒ 13			Datum: ☐ NAD 27 ☐NAD 83 ☒ WGS 84	
a	UTM E (in meters, to nearest 10 meters): 658,413 m E			UTM N (in meters, to nearest 10 meters): 3,622,425 m N	
b	**AND** Latitude (deg., min., sec.): 32° 43' 47.07" N			Longitude (deg., min., sec.): 103° 18' 34.6" W	
3	Name and zip code of nearest New Mexico town: Hobbs, 88240				
4	Detailed Driving Instructions from nearest NM town (attach a road map if necessary): From Hobbs, drive approximately 7 miles west on the Carlsbad Highway, and turn north just before mile marker 95. Drive north for approximately 1.7 miles passing the Maddox Station on the left, and turn west for 0.3 miles. After passing through an access gate, drive north approximately 0.5 miles to the proposed LPP site location.				
5	The facility is 8 miles West of Hobbs, NM.				
6	Status of land at facility (check one): ☒ Private ☐ Indian/Pueblo ☐ Federal BLM ☐ Federal Forest Service ☐ Other (specify)				
7	List all municipalities, Indian tribes, and counties within a ten (10) mile radius (20.2.72.203.B.2 NMAC) of the property on which the facility is proposed to be constructed or operated: Hobbs, Lea County, NM and Gaines County, TX				
8	**20.2.72** NMAC applications **only**: Will the property on which the facility is proposed to be constructed or operated be closer than 50 km (31 miles) to other states, Bernalillo County, or a Class I area (see www.nmenv.state.nm.us/aqb/modeling/class1areas.html)? ☐ Yes ☐ No (20.2.72.206.A.7 NMAC) If yes, list all with corresponding distances in kilometers: N/A				
9	Name nearest Class I area: Carlsbad Caverns National Park				
10	Shortest distance (in km) from facility boundary to the boundary of the nearest Class I area (to the nearest 10 meters): 116.2 km				
11	Distance (meters) from the perimeter of the Area of Operations (AO is defined as the plant site inclusive of all disturbed lands, including mining overburden removal areas) to nearest residence, school or occupied structure: 1,680 m from Maddox Station.				
12	Method(s) used to delineate the Restricted Area: Continuous Fencing. "**Restricted Area**" is an area to which public entry is effectively precluded. Effective barriers include continuous fencing, continuous walls, or other continuous barriers approved by the Department, such as rugged physical terrain with steep grade that would require special equipment to traverse. If a large property is completely enclosed by fencing, a restricted area within the property may be identified with signage only. Public roads cannot be part of a Restricted Area.				
13	Does the owner/operator intend to operate this source as a portable stationary source as defined in 20.2.72.7.X NMAC? ☐ Yes ☒ No A portable stationary source is not a mobile source, such as an automobile, but a source that can be installed permanently at one location or that can be re-installed at various locations, such as a hot mix asphalt plant that is moved to different job sites.				
14	Will this facility operate in conjunction with other air regulated parties on the same property? ☒ No ☐ Yes If yes, what is the name and permit number (if known) of the other facility?				

Section 1-E: Proposed Operating Schedule (The 1-E.1 & 1-E.2 operating schedules may become conditions in the permit.)

1	Facility **maximum** operating ($\frac{hours}{day}$): 24	($\frac{days}{week}$): 7	($\frac{weeks}{year}$): 52	($\frac{hours}{year}$): 8,760		
2	Facility's maximum daily operating schedule (if less than 24 $\frac{hours}{day}$)?	Start: N/A	☐AM ☐PM	End: N/A	☐AM ☐PM	
3	Month and year of anticipated start of construction: August, 2014					
4	Month and year of anticipated construction completion: November, 2014					
5	Month and year of anticipated startup of new or modified facility: November, 2014					
6	Will this facility operate at this site for more than one year? ☒ Yes ☐ No					

Section 1-F: Other Facility Information

1	Are there any current Notice of Violations (NOV), compliance orders, or any other compliance or enforcement issues related to this facility? ☐ Yes ☒ No If yes, specify:		
a	If yes, NOV date or description of issue:		NOV Tracking No:
b	Is this application in response to any issue listed in 1-F, 1 or 1a above? ☐ Yes ☒ No If Yes, provide the 1c & 1d info below:		
c	Document Title:	Date:	Requirement # (or page # and paragraph #):
d	Provide the required text to be inserted in this permit:		
2	Is air quality dispersion modeling being submitted with this application? ☐ Yes ☒ No		
3	Does this facility require an "Air Toxics" permit under 20.2.72.400 NMAC & 20.2.72.502, Tables A and/or B? ☐Yes ☒ No		
4	Will this facility be a source of federal Hazardous Air Pollutants (HAP)? ☒ Yes ☐ No		
a	If Yes, what type of source? ☐ **Major** (☐ ≥10 tpy of any single HAP **OR** ☐ ≥25 tpy of any combination of HAPS) **OR** ☒ **Minor** (☒ <10 tpy of any single HAP **AND** ☒ <25 tpy of any combination of HAPS)		
b	If 4.a is Yes, identify the subparts in 40 CFR 61 & 40 CFR 63 that apply to this facility (If no subparts apply, enter "N/A."): N/A		

Section 1-G: Streamline Application

(This section applies to 20.2.72.300 NMAC Streamline applications only)

1	☐ I have filled out Section 18, "Addendum for Streamline Applications."	☒ N/A (This is not a Streamline application.)

Section 1-H: Title V Specific Information

(Fill this section out only if this is a Title V application.)

1	Responsible Official (20.2.70.300.D.2 NMAC):		Phone:
a	R.O. Title:	R.O. e-mail:	
b	R. O. Address:		
2	Alternate Responsible Official (20.2.70.300.D.2 NMAC):		Phone:
a	A. R.O. Title:	A. R.O. e-mail:	
b	A. R. O. Address:		
3	Company's Corporate or Partnership Relationship to any other Air Quality Permittee (List the names of any companies that have operating (20.2.70 NMAC) permits and with whom the applicant for this permit has a corporate or partnership relationship):		
4	Name of Parent Company ("Parent Company" means the primary name of the organization that owns the company to be permitted wholly or in part.):		
a	Address of Parent Company:		
5	Names of Subsidiary Companies ("Subsidiary Companies" means organizations, branches, divisions or subsidiaries, which are owned, wholly or in part, by the company to be permitted.):		
6	Telephone numbers & names of the owners' agents and site contacts familiar with plant operations:		
7	Affected Programs to include Other States, local air pollution control programs (i.e. Bernalillo) and Indian tribes: Will the property on which the facility is proposed to be constructed or operated be closer than 80 km (50 miles) from other states, local pollution control programs, and Indian tribes and pueblos (20.2.70.402.A.2 and 20.2.70.7.B)? If yes, state which ones and provide the distances in kilometers:		

Section 1-I – Submittal Requirements

Each 20.2.73 NMAC (**NOI**), a 20.2.70 NMAC (**Title V**), a 20.2.72 NMAC (**NSR** minor source), or 20.2.74 NMAC (**PSD**) application package shall consist of the following:

Hard Copy Submittal Requirements:

1) One hard copy **original signed and notarized application package printed double sided 'head-to-toe' 2-hole punched** as we bind the document on top, not on the side; except Section 2 (landscape tables), which should be head-to-head. If 'head-to-toe printing' is not possible, print single sided. Please use **numbered tab separators** in the hard copy submittal(s) as this facilitates the review process. For NOI submittals only, hard copies of UA1, Tables 2A, 2D & 2F, Section 3 and the signed Certification Page are required.

2) If the application is for a NSR or Title V permitting action, include one working hard **copy** for Department use. This copy does not need to be 2-hole punched. Technical revisions only need to fill out Section 1-A, 1-B, 3, and should fill out those portions of other Section(s) relevant to the technical revision. TV Minor Modifications need only fill out Section 1-A, 1-B, 1-H, 3, and those portions of other Section(s) relevant to the minor modification. NMED may require additional portions of the application to be submitted, as needed.

3) The entire NOI or Permit application package, including the full modeling study, should be submitted electronically on compact disk(s) (CD). For permit application submittals, **two** CD copies are required (in sleeves, not crystal cases, please), with additional CD copies as specified below. NOI applications require only a single CD submittal.

4) If **air dispersion modeling** is required by the application type, include the **NMED Modeling Waiver OR** one additional electronic copy of the air dispersion modeling including the input and output files. The dispersion modeling ***summary report only*** should be submitted as hard copy(ies) unless otherwise indicated by the Bureau. The complete dispersion modeling study, including all input/output files, should be submitted electronically as part of the electronic submittal.

5) If subject to PSD review under 20.2.74 NMAC (PSD) include,
   a. one additional hard copy and one additional CD copy for US EPA,
   b. one additional hard copy and one additional CD copy for each federal land manager affected (NPS, USFS, FWS, USDI) and,
   c. one additional hard copy and one additional CD copy for each affected regulatory agency other than the Air Quality Bureau.

Electronic Submittal Requirements [in addition to the required hard copy(ies)]:

1) All required electronic documents shall be submitted in duplicate (2 separate CDs). A single PDF document of the entire application as submitted and the individual documents comprising the application.

2) The documents should also be submitted in Microsoft Office compatible file format (Word, Excel, etc.) allowing us to access the text in the documents (copy & paste). Any documents that cannot be submitted in a Microsoft Office compatible format shall be saved as a PDF file from within the electronic document that created the file. If you are unable to provide Microsoft office compatible electronic files or internally generated PDF files of files (items that were not created electronically: i.e. brochures, maps, graphics, etc,), submit these items in hard copy format with the number of additional hard copies corresponding to the number of CD copies required. We must be able to review the formulas and inputs that calculated the emissions.

3) It is preferred that this application form be submitted as 3 electronic files (2 MSWord docs: Universal Application section 1 and Universal Application section 3-19) and 1 Excel file of the tables (Universal Application section 2) on the CD(s). Please include as many of the 3-19 Sections as practical in a single MS Word electronic document. Create separate electronic file(s) if a single file becomes too large or if portions must be saved in a file format other than MS Word.

4) The electronic file names shall be a maximum of 25 characters long (including spaces, if any). The format of the electronic Universal Application shall be in the format: "A-3423-FacilityName". The "A" distinguishes the file as an application submittal, as opposed to other documents the Department itself puts into the database. Thus, all electronic application submittals should begin with "A-". Modifications to existing facilities should use the core permit number (i.e. '3423') the Department assigned to the facility as the next 4 digits. Use 'XXXX' for new facility applications. The format of any separate electronic submittals (additional submittals such as non-Word attachments, re-submittals, application updates) and Section document shall be in the format: "A-3423-9-description", where "9" stands for the section # (in this case Section 9-Public Notice). Please refrain, as much as possible, from submitting any scanned documents as this file format is extremely large, which uses up too much storage capacity in our database. Please take the time to fill out the header information throughout all submittals as this will identify any loose pages, including the Application Date (date submitted) & Revision # (0 for original, 1, 2, etc.; which will help keep track of subsequent partial update(s) to the original submittal. The footer information should not be modified by the applicant.

Table of Contents

Section 1: **General Facility Information**
Section 2: **Tables**
Section 3: **Application Summary**
Section 4: **Process Flow Sheet**
Section 5: **Plot Plan Drawn to Scale**
Section 6: **All Calculations**
Section 7: **Information Used to Determine Emissions**
Section 8: **Map(s)**
Section 9: **Proof of Public Notice**
Section 10: **Written Description of the Routine Operations of the Facility**
Section 11: **Source Determination**
Section 12: **PSD Applicability Determination for All Sources & Special Requirements for a PSD Application**
Section 13: **Discussion Demonstrating Compliance with Each Applicable State & Federal Regulation**
Section 14: **Operational Plan to Mitigate Emissions**
Section 15: **Alternative Operating Scenarios**
Section 16: **Air Dispersion Modeling**
Section 17: **Compliance Test History**
Section 18: **Addendum for Streamline Applications (streamline applications only)**
Section 19: **Requirements for the Title V (20.2.70 NMAC) Program (Title V applications only)**
Section 20: **Other Relevant Information**
Section 21: **Addendum for Landfill Applications**
Section 22: **Green House Gas Applicability**
Section 23: **Certification Page**

Table 2-A: Regulated Emission Sources

Unit and stack numbering must correspond throughout the application package. If applying for a NOI under 20.2.73 NMAC, equipment exemptions under 2.72.202 NMAC do not apply.

Unit Number[1]	Source Description	Manufacturer	Model #	Serial #	Maximum or Rated Capacity[3] (Specify Units)	Requested Permitted Capacity[3] (Specify Units)	Date of Manufacture or Reconstruction[2] / Date of Installation /Construction[2]	Controlled by Unit # / Emissions vented to Stack #	Source Classification Code (SCC)	For Each Piece of Equipment, Check One	Applicable State & Federal Regulation(s) (i.e. 20.2.X, JJJJ, …)	Replacing Unit No.
HOBB-1	Combustion Turbine	Mitsubishi Heavy Industries	M501F-F4	T-487	180 MW	180 MW	2001 September 2008	SCR-1 CAT-1 1	20200201	☐ Existi ☐ New ☒ To Be Modified ☐ To be	20.2.61, 77 NSPS KKKK	N/A
HOBB-2	Combustion Turbine	Mitsubishi Heavy Industries	M501F-F4	T-488	180 MW	180 MW	2001 September 2008	SCR-2 CAT-2 2	20200201	☐ Existi ☐ New ☒ To Be Modified ☐ To be	20.2.61, 77 NSPS KKKK	N/A
DB-1	Duct Burner	Forney	Standard	913864	330 MMBtu/hr	330 MMBtu/hr	2007 August 2008	SCR-1 CAT-1 1	10200601	☒ Existing (unchanged) ☐ To be ☐ New ☐ To Be	20.2.33, 61	N/A
DB-2	Duct Burner	Forney	Standard	913865	330 MMBtu/hr	330	2007 August 2008	SCR-2 CAT-2 2	10200601	☒ Existing (unchanged) ☐ To be ☐ New ☐ To Be	20.2.33, 61	N/A
AC-1	Auxiliary Cooling Tower	Baltimore Air Cooler	FXV3-364-100	U014653101	9,500 gpm	9,500 gpm	2002 August 2008	N/A AC-1	38500101	☒ Existing (unchanged) ☐ To be ☐ New ☐ To Be	N/A	N/A
AC-2	Auxiliary Cooling Tower	Baltimore Air Cooler	FXV3-364-100	U014653102	9,500 gpm	9,500 gpm	2002 August 2008	N/A AC-2	38500101	☒ Existing (unchanged) ☐ To be ☐ New ☐ To Be	N/A	N/A
AC-3	Auxiliary Cooling Tower	Baltimore Air Cooler	FXV3-364-100	U014653103	9,500 gpm	9,500 gpm	2002 August 2008	N/A AC-3	38500101	☒ Existing (unchanged) ☐ To be ☐ New ☐ To Be	N/A	N/A
IC-1	Inlet Chiller	Baltimore Aircoil	331132A	U014283404	5,898 gpm	5,898 gpm	2002 August 2008	N/A IC-1	38500101	☒ Existing (unchanged) ☐ To be ☐ New ☐ To Be	N/A	N/A
IC-2	Inlet Chiller	Baltimore Aircoil	331132A	U014283405	5,898 gpm	5,898 gpm	2002 August 2008	N/A IC-2	38500101	☒ Existing (unchanged) ☐ To be ☐ New ☐ To Be	N/A	N/A
IC-3	Inlet Chiller	Baltimore Aircoil	331132A	U014283406	5,898 gpm	5,898 gpm	2002 August 2008	N/A IC-3	38500101	☒ Existing (unchanged) ☐ To be ☐ New ☐ To Be	N/A	N/A
FH-1	Fuel Gas Heater	Rheos	2400	A07193433	2.4 MMBtu/hr	2.4 MMBtu/hr	2008 August 2008	N/A FH-1	39990003	☒ Existing (unchanged) ☐ To be ☐ New ☐ To Be	20.2.61	N/A
FH-2	Fuel Gas Heater	Rheos	2400	A07193435	2.4 MMBtu/hr	2.4 MMBtu/hr	2008 August 2008	N/A FH-2	39990003	☒ Existing (unchanged) ☐ To be ☐ New ☐ To Be	20.2.61	N/A
FH-3	Fuel Gas Heater	Rheos	2400	A07193434	2.4 MMBtu/hr	2.4 MMBtu/hr	2008 August 2008	N/A FH-3	39990003	☒ Existing (unchanged) ☐ To be ☐ New ☐ To Be	20.2.61	N/A
G-1	Standby Generator	Volvo Penta	D1641GEP	D16*021102*C3*A	565 kW 768 hp	565 kW 768 hp	2008 August 2008	N/A G-1	20100102	☒ Existing (unchanged) ☐ To be ☐ New ☐ To Be	20.2.61, 77, 82 NSPS IIII MACT ZZZZ	N/A
FP-1	Diesel Fire Pump	Detroit Diesel	PDFFP06 FA-IIV	6VF-300006	443 Hp	443 Hp	2001 2001	N/A FP-1	20100102	☒ Existing (unchanged) ☐ To be ☐ New ☐ To Be	20.2.61, 82 MACT ZZZZ	N/A

[1] Unit numbers must correspond to unit numbers in the previous permit unless a complete cross reference table of all units in both permits is provided.
[2] Specify dates required to determine regulatory applicability.
[3] To properly account for power conversion efficiencies, generator set rated capacity shall be reported as the rated capacity of the engine in horsepower, not the kilowatt capacity of the generator set.

Table 2-B: Insignificant Activities[1] (20.2.70 NMAC) OR Exempted Equipment (20.2.72 NMAC)

All 20.2.70 NMAC (Title V) applications must list all Insignificant Activities in this table. All 20.2.72 NMAC applications must list Exempted Equipment in this table. If equipment listed on this table is exempt under 20.2.72.202.B.5, include emissions calculations and emissions totals for 202.B.5 "similar functions" units, operations, and activities in Section 6, Calculations. Equipment and activities exempted under 20.2.72.202 NMAC may not necessarily be Insignificant under 20.2.70 NMAC (and vice versa). Unit & stack numbering must be consistent throughout the application package. Per Exemptions Policy 02-012.00 (see http://www.nmenv.state.nm.us/aqb/permit/aqb_pol.html), 20.2.72.202.B NMAC Exemptions do not apply, but 20.2.72.202.A NMAC exemptions do apply to NOI facilities under 20.2.73 NMAC. List 20.2.72.301.D.4 NMAC Auxiliary Equipment for Streamline applications in Table 2-A. The List of Insignificant Activities (for TV) can be found online at http://www.nmenv.state.nm.us/aqb/forms/InsignificantListTitleV.pdf . TV sources may elect to enter both TV Insignificant Activities and Part 72 Exemptions on this form.

Unit Number	Source Description	Manufacturer	Model No. / Serial No.	Max Capacity / Capacity Units	List Specific 20.2.72.202 NMAC Exemption (e.g. 20.2.72.202.B.5) / Insignificant Activity citation (e.g. IA List Item #1.a)	Date of Manufacture /Reconstruction[2] / Date of Installation /Construction[2]	For Each Piece of Equipment, Check Onc
T-1	Diesel Day Tank - Firewater Pump	unknown	unknown	300 gal	N/A	unknown	☒ Existing (unchanged) ☐ To be R ☐ New/A ☐ To Be M
			unknown	300 gal	List Item #1.b.	unknown	
T-2	Diesel Day Tank - Standby Generator	unknown	unknown	1,250 gal	N/A	unknown	☒ Existing (unchanged) ☐ To be R ☐ New/A ☐ To Be M
			unknown	1,250 gal	List Item #1.b.	unknown	
T-3	Ammonia Tank	unknown	unknown	9,000 gal	N/A	unknown	☒ Existing (unchanged) ☐ To be R ☐ New/A ☐ To Be M
			unknown	9,000 gal	List Item #1.b.	unknown	
T-4	Caustic Bulk Storage Tank	unknown	unknown	7,000 gal	N/A	unknown	☒ Existing (unchanged) ☐ To be R ☐ New/A ☐ To Be M
			unknown	7,000 gal	List Item #1.b.	unknown	
T-5	Acid Bulk Storage Tank	unknown	unknown	7,000 gal	N/A	unknown	☒ Existing (unchanged) ☐ To be R ☐ New/A ☐ To Be M
			unknown	7,000 gal	List Item #1.b.	unknown	
T-6	Neutralization Tank	unknown	unknown	50,000 gal	N/A	unknown	☒ Existing (unchanged) ☐ To be R ☐ New/A ☐ To Be M
			unknown	50,000 gal	List Item #1.b.	unknown	
AE-1	Apex evaporation devices	unknown	unknown	unknown	N/A	unknown	☒ Existing (unchanged) ☐ To be R ☐ New/A ☐ To Be M
			unknown	unknown	List Item #1.a.	unknown	
							☐ Existing ☐ New/A ☐ To Be M
							☐ Existing ☐ New/A ☐ To Be M
							☐ Existing ☐ New/A ☐ To Be M
							☐ Existing ☐ New/A ☐ To Be M
							☐ Existing ☐ New/A ☐ To Be M
							☐ Existing ☐ New/A ☐ To Be M

[1] Insignificant activities exempted due to size or production rate are defined in 20.2.70.300.D.6, 20.2.70.7.Q NMAC, and the NMED/AQB List of Insignificant Activities, dated September 15, 2008. Emissions from these insignificant activities do not need to be reported, unless specifically requested.

[2] Specify date(s) required to determine regulatory applicability.

Table 2-C: Emissions Control Equipment

Unit and stack numbering must correspond throughout the application package. Only list control equipment for TAPs if the TAP's maximum uncontrolled emissions rate is over its respective threshold as listed in 20.2.72 NMAC, Subpart V, Tables A and B. In accordance with 20.2.72.203.A(3) and (8) NMAC, 20.2.70.300.D(5)(b) and (e) NMAC, and 20.2.73.200.B(7) NMAC, the permittee shall report all control devices and list each pollutant controlled by the control device regardless if the applicant takes credit for the reduction in emissions.

Control Equipment Unit No.	Control Equipment Description	Date Installed	Controlled Pollutant(s)	Controlling Emissions for Unit Number(s)[1]	Efficiency (% Control by Weight)	Method used to Estimate Efficiency
SCR-1	Selective Catalytic Reduction	2008	NOx	HOBB-1, DB-1	Variable, max 91.9%	Manufacturer Data
SCR-2	Selective Catalytic Reduction	2008	NOx	HOBB-2, DB-2	Variable, max 91.9%	Manufacturer Data
CAT-1	Catalytic Oxidation	2008	CO, VOC, HAP	HOBB-1, DB-1	Variable; max CO 85%, max VOC 80%, max HAP 80%	Manufacturer Data
CAT-2	Catalytic Oxidation	2008	CO, VOC, HAP	HOBB-2, DB-2	Variable; max CO 85%, max VOC 80%, max HAP 80%	Manufacturer Data
N/A	High Efficiency Drift Eliminator	2008	PM_{10}	IC-1	N/A	N/A
N/A	High Efficiency Drift Eliminator	2008	PM_{10}	IC-2	N/A	N/A
N/A	High Efficiency Drift Eliminator	2008	PM_{10}	IC-3	N/A	N/A
N/A	Dry Low Burner	2008	NOx	FH-1	0.054 lb/MMbtu	Manufacturer Data
N/A	Dry Low Burner	2008	NOx	FH-2	0.054 lb/MMbtu	Manufacturer Data
N/A	Dry Low Burner	2008	NOx	FH-3	0.054 lb/MMbtu	Manufacturer Data
N/A	Dry Low Burner	2008	NOx	HOBB-1, DB-1	BACT	Manufacturer Data
N/A	Dry Low Burner	2008	NOx	HOBB-2, DB-2	BACT	Manufacturer Data

[1] List each control device on a separate line. For each control device, list all emission units controlled by the control device.

Table 2-D: Maximum Emissions (under normal operating conditions)

☐ This Table was intentionally left blank because it would be identical to Table 2-E.

Maximum Emissions are the emissions at maximum capacity a**nd prior to (in the absence of) pollution control**, emission-reducing process equipment, or any other emission reduction. Calculate the hourly emissions using the worst case hourly emissions for each pollutant. For each pollutant, **calculate the annual emissions as if the facility were operating at maximum plant capacity without pollution controls for 8760 hours per year**, unless otherwise approved by the Department. List Hazardous Air Pollutants (HAP) & Toxic Air Pollutants (TAPs) in Table 2-I. Unit & stack numbering must be consistent throughout the application package. For each unit with flashing, list tank-flashing emissions estimates as a separate line item (20.2.70.300.D.5 NMAC, 20.2.72.203.A.3 NMAC, 20.2.73.200.B.6, & 20.2.74.301 NMAC). Fill all cells in this tablewith the emission numbers or a "-" symbol. A "-" symbol indicates that emissions of this pollutant are not expected. Numbers shall be expressed with a minimum of two significant figures[1]. If there are any significant figures to the left of a decimal point, there shall be no more than one significant figure to the right of the decimal point.

Unit No.	NOx		CO		VOC		SOx		TSP[2]		PM10[2]		PM2.5[2]		H_2S		Lead	
	lb/hr	ton/yr	lb/hr	ton/yr	lb/hr	ton/yr	lb/hr	ton/yr	lb/hr	ton/yr	lb/hr	ton/yr	lb/hr	ton/yr	lb/hr	ton/yr	lb/hr	ton/yr
HOBB-1 + DB-1	178.6	782.27	66.8	292.8	5.2	22.9	10.0	44.0	17.0	74.5	17.0	74.5	17.0	74.5				
HOBB-2 + DB-2	178.6	782.3	66.8	292.8	5.2	22.9	10.0	44.0	17.0	74.5	17.0	74.5	17.0	74.5				
IC-1, IC-2, IC-3A & B	-	-	-	-	-	-	-	-	-	1.1	-	0.50						
FH-1, FH-2, FH-3A & B	0.39	1.7	0.24	1.0	0.036	0.16	0.040	0.18	0.050	0.22	0.050	0.22						
FP-1 A&B	3.5	15.5	1.9	8.3	0.84	3.7	0.69	3.0	0.11	0.48	0.11	0.48						
G-1 A&B	6.3	27.6	0.90	3.9	0.53	2.3	0.31	1.3	0.25	1.1	0.25	1.1						
AC-1, AC-2, AC-3A & B	-	-	-	-	-	-	-	-	0.015	0.066	0.015	0.066						
Totals	367.4	1,609.3	136.7	598.8	11.8	51.9	21.1	92.5	34.4	152.0	34.4	151.4	34.0	149.0				

[1] **Significant Figures Examples:** One significant figure – 0.03, 3, 0.3. Two significant figures – 0.34, 34, 3400, 3.4

[2] **Condensables:** Include condensable particulate matter emissions in particulate matter calculations.

Table 2-E: Requested Allowable Emissions

Unit & stack numbering must be consistent throughout the application package. For each unit with flashing, list tank-flashing emissions estimates as a separate line item (20.2.70.300.D.5 NMAC, 20.2.72.203.A.3 NMAC, 20.2.73.200.B.6, & 20.2.74.301 NMAC). Fill all cells in this table with the emission numbers or a "-" symbol. A "-" symbol indicates that emissions of this pollutant are not expected. Numbers shall be expressed with a minimum of two significant figures[1]. If there are any significant figures to the left of a decimal point, there shall be no more than one significant figure to the right of the decimal point. Please do not change the column widths on this table.

Unit No.	NOx		CO		VOC		SOx		TSP[2]		PM10[2]		PM2.5[2]		H_2S		Lead	
	lb/hr	ton/yr	lb/hr	ton/yr	lb/hr	ton/yr	lb/hr	ton/yr	lb/hr	ton/yr	lb/hr	ton/yr	lb/hr	ton/yr	lb/hr	ton/yr	lb/hr	ton/yr
HOBB-1*	14.5	185.6	8.8	311.6	2.4	97.2	8.4	80.6	11.3	120.4	11.3	120.4	11.3	120.4				
HOBB-2*	14.5		8.8		2.4		8.4		11.3		11.3		11.3					
HOBB-1* + DB-1	18.1		11.0		2.8		10.7		17.1		17.1		17.1					
HOBB-2* + DB-2	18.1		11.0		2.8		10.7		17.1		17.1		17.1					
IC-1, IC-2, IC-3	-	-	-	-	-	-	-	-	<	1.1	<	0.5						
FH-1, FH-2, FH-3	0.4	1.7	0.2	1.0	0.0	0.2	0.0	0.2	0.1	0.2	0.1	0.2						
FP-1	3.5	0.2	1.9	0.1	0.8	0.0	0.7	0.0	0.1	0.0	0.1	0.0						
G-1	6.3	1.6	0.9	0.2	0.5	0.1	0.3	0.1	0.2	0.1	0.2	0.1						
AC-1, AC-2, AC-3	-	-	-	-	-	-	-	-	0.0	0.1	0.0	0.1						
Totals	46.4	189.1	25.0	313.0	7.1	97.5	22.4	80.9	34.6	121.9	34.6	121.3	34.2	120.4				

[1] **Significant Figures Examples**: One significant figure – 0.03, 3, 0.3. Two significant figures – 0.34, 34, 3400, 3.4

[2] **Condensables:** Include condensable particulate matter emissions in particulate matter calculations.

* HOBB-1 and HOBB-2 will either run with the DB or without DB.

Table 2-F: Additional Emissions during Startup, Shutdown, and Routine Maintenance (SSM)

☐ This table is intentionally left blank as all SSM emissions at this facility do not require an increase in Requested Allowables greater than those listed in Table 2-E. If you are required to report GHG emissions as described in Section 21, include any GHG emissions due Startup, Shutdown, and/or Scheduled Maintenance in Table 2-P. Provide explanation in Section 6.

All applications, including NOI applications, must fill out this table, reporting Maximum Emissions during Startup, Shutdown and Scheduled Maintenance (20.2.7 NMAC, 20.2.72.203.A.3 NMAC, 20.2.73.200.D.2 NMAC). **Only report SSM emissions greater than the cooresponding Table 2-E emissions**[1]. Not providing emissions for a unit indicates that SSM emissions for this unit are less than the Requested Allowables for that unit in Table 2-E. In Section 6, provide emissions calculations for any emissions listed in this table. Refer to "Guidance for Submittal of Startup, Shutdown, Maintenance Emissions in Permit Applications (http://www.nmenv.state.nm.us/aqb/permit/app_form.html) for more detailed instructions. For each unit with flashing, list tank-flashing emissions estimates as a separate line item (20.2.72.203.A.3 and 20.2.70.300.D.5 NMAC). List all units and SSM fugitives, except GHGs, in this table. Refer to Table 2-E for instructions on use of the "-" symbol and on significant figures.

Unit No.	NOx		CO		VOC		SOx		TSP[2]		PM10[2]		PM2.5[2]		H_2S		Lead	
	lb/hr	ton/yr	lb/hr	ton/yr	lb/hr	ton/yr	lb/hr	ton/yr	lb/hr	ton/yr	lb/hr	ton/yr	lb/hr	ton/yr	lb/hr	ton/yr	lb/hr	ton/yr
HOBB-1	175	-	430	-	75.0	-	-	-	-	-	-	-	-	-				
HOBB-2	175	-	430	-	75.0	-	-	-	-	-	-	-	-	-				
Totals	350.1	-	859.9	-	149.9	-												

[1] **For instance**, if the short term steady-state Table 2-E emissions are 5 lb/hr and the SSM rate is 12 lb/hr, enter 7 lb/hr in the table below. If the annual steady-state Table 2-E emissions are 21.9 TPY, and the number of scheduled SSM events result in annual emissions of 31.9 TPY, enter 10.0 TPY in the table below.

[2] **Condensables**: Include condensable particulate matter emissions in particulate matter calculations.

Table 2-G: Stack Exit and Fugitive Emission Rates for Special Stacks

☒ I have elected to leave this table blank because this facility does not have any stacks/vents that split emissions from a single source or combine emissions from more than one source listed in table 2-A. Additionally, the emission rates of all stacks match the Requested allowable emission rates stated in Table 2-E.

Use this table to list stack emissions (requested allowable) from split and combined stacks. List Toxic Air Pollutants (TAPs) and Hazardous Air Pollutants (HAPs) in Table 2-I. List all fugitives that are associated with the normal, routine, and non-emergency operation of the facility. List tank-flashing emissions estimates as a separate line item. Unit and stack numbering must correspond throughout the application package. Refer to Table 2-E for instructions on use of the "-" symbol and on significant figures.

Stack No.	Serving Unit Number(s) from Table 2-A	NOx		CO		VOC		SOx		TSP		PM10		PM2.5		☐ H_2S or ☐	
		lb/hr	ton/yr	lb/hr	ton/yr	lb/hr	ton/yr	lb/hr	ton/yr	lb/hr	ton/yr	lb/hr	ton/yr	lb/hr	ton/yr	lb/hr	ton/yr
See emissions given in Table 2-E																	
Totals:																	

Table 2-H: Stack Exit Conditions

Unit and stack numbering must correspond throughout the application package.

Stack Number	Serving Unit Number(s) from Table 2-A	Orientation (H-Horizontal V=Vertical)	Rain Caps (Yes or No)	Height Above Ground (ft)	Temp. (F)	Flow Rate		Moisture by Volume (%)	Velocity (ft/sec)	Inside Diameter or L x W (ft)
						(acfs)	(dscfs)			
1	HOBB-1	V	No	165	179	19,021	11,707	8.4	74.7	18
1	HOBB-1+DB-1	V	No	165	179	19,168	11,608	9.9	75.3	18
2	HOBB-2	V	No	165	179	19,021	11,707	8.4	74.7	18
2	HOBB-2+DB-2	V	No	165	179	19,168	11,608	9.9	75.3	18
3	G-1	V	Yes	10.4	893	65.0	-	-	215.2	0.62
4	FP-1	H	No	10.8	820	54.6	-	-	123.6	0.75
5-6	FH-1, FH-2, FH-3	V	No	15	600	3,029	1,192	8.2	10.3	2.5

Table 2-I: Stack Exit and Fugitive Emission Rates for HAPs and TAPs

In the table below, report the Potential to Emit for each HAP from each regulated emission unit listed in Table 2-A, only if the entire facility emits the HAP at a rate greater than or equal to one (1) ton per year For each such emission unit, HAPs shall be reported to the nearest 0.1 tpy. Each facility-wide Individual HAP total and the facility-wide Total HAPs shall be the sum of all HAP sources calculated to the nearest 0.1 ton per year. Per 20.2.72.403.A.1 NMAC, facilities not exempt [see 20.2.72.402.C NMAC] from TAP permitting shall report each TAP that has an uncontrolled emission rate in excess of its pounds per hour screening level specified in 20.2.72.502 NMAC. TAPs shall be reported using one more significant figure than the number of significant figures shown in the pound per hour threshold corresponding to the substance. Use the HAP nomenclature as it appears in Section 112 (b) of the 1990 CAAA and the TAP nomenclature as it listed in 20.2.72.502 NMAC. Include tank-flashing emissions estimates of HAPs in this table. For each HAP or TAP listed, fill all cells in this table with the emission numbers or a "-" symbol. A "-" symbol indicates that emissions of this pollutant are not expected or the pollutant is emitted in a quantity less than the threshold amounts described above.

Stack No.	Unit No.(s)	Total HAPs		Ammonia ☐ HAP or ☒ TAP		Formaldehyde ☒ HAP or		Hexane ☒ HAP or ☐		Provide Pollutant Name Here ☐ HAP or ☐ TAP		Provide Pollutant Name Here ☐ HAP or ☐ TAP		Provide Pollutant Name Here ☐ HAP or ☐ TAP		Provide Pollutant Name Here ☐ HAP or ☐ TAP		Provide Pollutant Name Here HAP or ☐ T	
		lb/hr	ton/yr	lb/hr	ton/yr	lb/hr	ton/yr	lb/hr	ton/yr	lb/hr	ton/yr	lb/hr	ton/yr	lb/hr	ton/yr	lb/hr	ton/yr	lb/hr	ton/yr
1	HOBB-1 + DB-1	0.53	1.59	32.10	281.30	0.14	0.54	0.21	0.34										
2	HOBB-2 + DB-2	0.53	1.59	32.10		0.14	0.54	0.21	0.34										
Totals:		1.1	3.2	64.2	281.3	0.3	1.1	0.4	0.7										

Table 2-J: Fuel

Specify fuel characteristics and usage. Unit and stack numbering must correspond throughout the application package.

Unit No.	Fuel Type (No. 2 Diesel, Natural Gas, Coal, …)	Specify Units				
		Lower Heating Value	Hourly Usage	Annual Usage	% Sulfur	% Ash
HOBB-1	Natural Gas	932 Btu/scf	1,697 MMBtu/hr (LHV)	12,936,672 MMBtu/yr (LHV)	1.7 gr-S/100scf	0
HOBB-2	Natural Gas	932 Btu/scf	1,697 MMBtu/hr (LHV)	12,936,672 MMBtu/yr (LHV)	1.7 gr-S/100scf	0
DB-1	Natural Gas	932 Btu/scf	330 MMBtu/hr (LHV)	1,196,736 MMBtu/yr (LHV)	1.7 gr-S/100scf	0
DB-2	Natural Gas	932 Btu/scf	330 MMBtu/hr (LHV)	1,196,736 MMBtu/yr (LHV)	1.7 gr-S/100scf	0
FH-1, FH-2, FH-3	Natural Gas	932 Btu/scf	2.4 MMBtu/hr	21,024 MMBtu/yr	1.7 gr-S/100scf	0
FP-1	Diesel	19,300 Btu/lb	24.9 gph	2,490 gpy	0.20%	0
G-1	Diesel	19,300 Btu/lb	37.2 gph	18,600 gpy	Neg.	0

Table 2-K: Liquid Data for Tanks Listed in Table 2-L

For each tank, list the liquid(s) to be stored in each tank. If it is expected that a tank may store a variety of hydrocarbon liquids, enter "mixed hydrocarbons" in the Composition column for that tank and enter the corresponding data of the most volatile liquid to be stored in the tank. If tank is to be used for storage of different materials, list all the materials in the "All Calculations" attachment, run the newest version of TANKS on each, and use the material with the highest emission rate to determine maximum uncontrolled and requested allowable emissions rate. The permit will specify the most volatile category of liquids that may be stored in each tank. Include appropriate tank-flashing modeling input data. Use additional sheets if necessary. Unit and stack numbering must correspond throughout the application package.

Tank No.	SCC Code	Material Name	Composition	Liquid Density (lb/gal)	Vapor Molecular Weight (lb/lb*mol)	Average Storage Conditions		Max Storage Conditions	
						Temperature (°F)	True Vapor Pressure (psia)	Temperature (°F)	True Vapor Pressure (psia)
All tanks at the facility are exempt from permitting; See Table 2-B.									

Table 2-L: Tank Data

Include appropriate tank-flashing modeling input data. Use an addendum to this table for unlisted data categories. Unit and stack numbering must correspond throughout the application package. Use additional sheets if necessary. See reference Table 2-L2. Note: 1.00 bbl = 10.159 M3 = 42.0 gal

Tank No.	Date Installed	Materials Stored	Seal Type (refer to Table 2-LR below)	Roof Type (refer to Table 2-LR below)	Capacity		Diameter (M)	Vapor Space (M)	Color (from Table VI-C)		Paint Condition (from Table VI-C)	Annual Throughput (gal/yr)	Turn-overs (per year)
					(bbl)	(M^3)			Roof	Shell			
All tanks at the facility are exempt from permitting; See Table 2-B.													

Table 2-L2: Liquid Storage Tank Data Codes Reference Table

Roof Type	Seal Type, Welded Tank Seal Type		Seal Type, Riveted Tank Seal Type		Roof, Shell Color	Paint Condition
FX: Fixed Roof	**Mechanical Shoe Seal**	**Liquid-mounted resilient seal**	**Vapor-mounted resilient seal**	**Seal Type**	**WH**: White	Good
IF: Internal Floating Roof	**A**: Primary only	**A**: Primary only	**A**: Primary only	**A**: Mechanical shoe, primary only	**AS**: Aluminum (specular)	Poor
EF: External Floating Roof	**B**: Shoe-mounted secondary	**B**: Weather shield	**B**: Weather shield	**B**: Shoe-mounted secondary	**AD**: Aluminum (diffuse)	
P: Pressure	**C**: Rim-mounted secondary	**C**: Rim-mounted secondary	**C**: Rim-mounted secondary	**C**: Rim-mounted secondary	**LG**: Light Gray	
					MG: Medium Gray	
					BL: Black	
					OT: Other (specify)	

Note: 1.00 bbl = 0.159 M^3 = 42.0 gal

Table 2-M: Materials Processed and Produced (Use additional sheets as necessary.)

Material Processed				Material Produced			
Description	**Chemical Composition**	**Phase (Gas, Liquid, or Solid)**	**Quantity (specify units)**	**Description**	**Chemical Composition**	**Phase**	**Quantity (specify units)**
Natural Gas	Mixed Hydrocarbons	Gas	97,354 MMBtu/day	Electricity (Power Generation)	Megawatts	N/A	15,004 MW daily
Diesel	Mixed Hydrocarbons	Liquid	62.1 gph				

Table 2-N: CEM Equipment

Enter Continuous Emissions Measurement (CEM) Data in this table. If CEM data will be used as part of a federally enforceable permit condition, or used to satisfy the requirements of a state or federal regulation, include a copy of the CEM's manufacturer specification sheet in the Information Used to Determine Emissions attachment. Unit and stack numbering must correspond throughout the application package. Use additional sheets if necessary.

Stack No.	Pollutant(s)	Manufacturer	Model No.	Serial No.	Sample Frequency	Averaging Time	Range	Sensitivity	Accuracy
HOBB-1 and HOBB-1 + DB1	NOx/O_2	Teledyne Monitor Labs	TML41-O2	NO271	15 min	1 hour	Autorange: min 0-1ppm max 0-200ppm	0 @ < 20ppb < 0.2%@> 20ppm	0.5% of reading
HOBB-1 and HOBB-1 + DB1	CO - high	Teledyne Monitor Labs	TML30	CO238	15 min	1 hour	0-1,000 ppm	0 @ < 20ppb < 0.5%@> 20ppm	0.5% of reading
HOBB-1 and HOBB-1 + DB1	CO - low	Teledyne Monitor Labs	TML30	CO061	15 min	1 hour	0-1,000 ppm	0 @ < 20ppb < 0.5%@> 20ppm	0.5% of reading
HOBB-2 and HOBB-2 + DB2	NOx/O2	Teledyne Monitor Labs	TML41-O2	NO268	15 min	1 hour	Autorange: min 0-1ppm max 0-200ppm	0 @ < 20ppb < 0.2%@> 20ppm	0.5% of reading
HOBB-2 and HOBB-2 + DB2	CO - high	Teledyne Monitor Labs	TML30	CO237	15 min	1 hour	0-1,000 ppm	0 @ < 20ppb < 0.5%@> 20ppm	0.5% of reading
HOBB-2 and HOBB-2 + DB2	CO - low	Teledyne Monitor Labs	TML30	CO090	15 min	1 hour	0-1,000 ppm	0 @ < 20ppb < 0.5%@> 20ppm	0.5% of reading

Table 2-O: Parametric Emissions Measurement Equipment

Unit and stack numbering must correspond throughout the application package. Use additional sheets if necessary.

Unit No.	Parameter/Pollutant Measured	Location of Measurement	Unit of Measure	Acceptable Range	Frequency of Maintenance	Nature of Maintenance	Method of Recording	Averaging Time
HOBB-1	Fuel Flowrate	Feed to Combustor	Hundred SCF/hr	0 - 18,000.0	Annual	Calibration	CEMS DAHS	6 sec to record to 1 min avg.
HOBB-2	Fuel Flowrate	Feed to Combustor	Hundred SCF/hr	0 - 18,000.0				
HOBB-1 +DB-1	Fuel Flowrate	Feed to Combustor	Hundred SCF/hr	0 - 4,850.0				
HOBB-2 +DB-2	Fuel Flowrate	Feed to Combustor	Hundred SCF/hr	0 - 4,850.0				

Table 2-P: Green House Gas Emissions

Applications submitted under 20.2.70, 20.2.72, & 20.2.74 NMAC that are Major for GHGs as determined in Section 22 of this application are required to complete this Table if so directed in Section 22 or are major for GHGs and have an existing GHG BACT. Applicants must report potential emission rates in short tons per year. **Include GHG emissions during Startup, Shutdown, and Scheduled Maintenance in this table.**

		CO_2 ton/yr	N_2O ton/yr	CH_4 ton/yr	SF_6 ton/yr	PFC/HFC ton/yr[2]									Total GHG Mass Basis ton/yr[4]	Total CO_2e ton/yr[5]
Unit No.	**GWPs [1]**	**1**	**298**	**25**	**23,900**	**footnote 3**										
HOBB-1 + DB-1	**mass GHG**	945,560	1.75	17.5											945,579	
	CO_2e	945,560	523	439												946,522
HOBB-2 + DB-2	**mass GHG**	945,560	1.75	17.5											945,579	
	CO_2e	945,560	523	439												946,522
	mass GHG															
	CO_2e															
	mass GHG															
	CO_2e															
	mass GHG															
	CO_2e															
	mass GHG															
	CO_2e															
	mass GHG															
	CO_2e															
	mass GHG															
	CO_2e															
	mass GHG															
	CO_2e															
	mass GHG															
	CO2e															
	mass GHG															
	CO_2e															
	mass GHG															
	CO_2e															

[1] **GWP** (Global Warming Potential): Applicants must use the most current GWPs codified in Table A-1 of 40 CFR part 98. GWPs are subject to change, therefore, applicants need to check 40 CFR 98 to confirm GWP values.

[2] For **HFCs** or **PFCs** describe the specific HFC or PFC compound and use a separate column for each individual compound.

[3] For each new compound, enter the appropriate GWP for each HFC or PFC compound from Table A-1 in 40 CFR 98.

[4] Green house gas emissions on a **mass basis** is the ton per year green house gas emission before adjustment with its GWP.

[5] **CO_2e** means Carbon Dioxide Equivalent and is calculated by multiplying the TPY mass emissions of the green house gas by its GWP.

Section 3
Application Summary

The **Application Summary** shall include a brief description of the facility and its process, the type of permit application, the applicable regulation (i.e. 20.2.72.200.A.X, or 20.2.73 NMAC) under which the application is being submitted, and any air quality permit numbers associated with this site. If this facility is to be collocated with another facility, provide details of the other facility including permit number(s). In case of a revision or modification to a facility, provide the lowest level regulatory citation (i.e. 20.2.72.219.B.1.d NMAC) under which the revision or modification is being requested. Also describe the proposed changes from the original permit, how the proposed modification will effect the facility's operations and emissions, de-bottlenecking impacts, and changes to the facility's major/minor status (both PSD & Title V).

Routine or predictable emissions during Startup, Shutdown, and Maintenance (SSM): Provide an overview of how SSM emissions are accounted for in this application. Refer to "Guidance for Submittal of Startup, Shutdown, Maintenance Emissions in Permit Applications (http://www.nmenv.state.nm.us/aqb/permit/app_form.html) for more detailed instructions on SSM emissions.

This application proposes a significant revision to NSR Permit PSD 3449-R6 for Lea Power Partners, LLC (LPP) Hobbs Generating Station (Hobbs).

Hobbs is a natural gas fueled, nominal 600 MW net output power plant with two advanced firing temperature, Mitsubishi 501F combustion turbine generators (CTGs), each provided with its own heat recovery steam generator (HRSG) including duct burners, a single condensing, reheat steam turbine generator (STG), and an air cooled condenser serving the STG. The plant generates electricity for sale to Southwestern Public Service Company, its successors or assigns. The facility is located approximately 9 miles west of Hobbs, New Mexico in Lea County.

To improve the station performance, Hobbs is proposing to upgrade both CTGs by replacing the Row 1 Blade Ring and Rows 1 and 2 Turbine Blades and Vanes with new parts that have superior cooling technology. This change will result in the need for less cooling air and will have a corresponding increase in fuel consumption, exhaust flow rate, temperature, and electricity production. Stack exhaust nitrogen oxides (NO_X) emissions will continue to be controlled to 2 parts per million volume dry basis corrected to 15 percent oxygen (ppmvdc) on a 24-hour average basis, using selective catalytic reduction (SCR) with aqueous ammonia (NH_3). Stack exhaust carbon monoxide (CO) and volatile organic compounds (VOC) emissions will continue to be controlled to 2 ppmvdc on a 1-hour average basis and to 1 ppmvdc on a 24-hour average basis, respectively, by means of an oxidation catalyst. Stack exhaust sulfur dioxide (SO_2) emissions will continue to be controlled by exclusively firing pipeline quality natural gas. Although NO_X, CO and VOC concentrations from the turbine exhaust will remain constant, there will be an increase in actual mass emission rates of these pollutants due to the increased exhaust flow rate compared to historical past actual emission rates. Increases in particulate matter (PM_{10} and $PM_{2.5}$) and SO_2, are also expected due to the increased fuel consumption.

Permitted emission rates for normal operations will not change. During the process of developing this application, it was discovered that the prior calculation methodology contained an error which resulted in a higher emission rate representation than was necessary at the time.

The SSM annual emission rates are updated in this application based on observed historical mass emission rates. The prior calculation methodology, incorrectly represented that pollution control equipment would be operational during the majority of the startup sequence. The updated representation is consistent with observed SSM annual emission rates.

This significant revision is requested under 20.2.72.200.A(2) NMAC and 20.2.74.200.A NMAC. A suggested permit markup is included in the following pages, starting with Section 3, Page 3. Within the markup, the text requested to be modified has been changed to red font and has been strikethrough. An explanatory comment with suggested update language in blue font has been inserted for each requested modification. During the development of this permit amendment application, it was noted that a number of permit conditions were updated in the latest revision to the Title V Permit (P244-M4), including but not limited to A.401, A402, Part B General Conditions, and Part C Miscellaneous. Since no corresponding updates were made to the PSD permit at the time, we request for consistency that all conditions be updated in the amended PSD-3449 permit.

The only calculations included in this application are for the CTG/HRSG trains, which are the only modified sources represented in this application. Tables 106A, 106B and 106C include requested modifications to the permit to align with current Title V permit. These changes are not associated with the proposed project but to previous projects. However, it appears that the NSR permit was not updated.

Calculations for the auxiliary equipment are not included in this application, as they remain unchanged and carried forward from previous permit applications.

SUGGESTED PERMIT MARKUP FOLLOWS

Comment [n1]: Please update to: **R7**

TABLE OF CONTENTS

Part A FACILITY SPECIFIC REQUIREMENTS	3
A100 Introduction	3
A101 Permit Duration (expiration)	4
A102 Facility: Description	5
A103 Facility: Applicable Regulations	6
A104 Facility: Regulated Sources	6
A105 Facility: Control Equipment	8
A106 Facility: Allowable Emissions	8
A107 Facility: Allowable Startup, Shutdown, & Maintenance (SSM) Emissions]	11
A108 Facility: Allowable Operations	11
A109 Facility: Reporting Schedules	12
A110 Facility: Fuel Sulfur Requirements	12
A111 Facility: 20.2.61 NMAC Opacity	12
EQUIPMENT SPECIFIC REQUIREMENTS	13
Oil and Gas Industry	13
A200 Oil and Gas Industry - Not Required	13
Construction Industry – Aggregate	13
A300 Construction Industry - Not Required	13
Power Generation Industry	13
A400 Power Generation Industry	13
A401 Turbines	13
Part B GENERAL CONDITIONS	18
B100 Introduction	18
B101 Legal	18
B102 Authority.	19
B103 Annual Fee	19
B104 Appeal Procedures	20
B105 Submittal of Reports and Certifications	20
B106 NSPS and/or MACT Startup, Shutdown, and Malfunction Operations	20
B107 Startup, Shutdown, and Maintenance Operations	21
B108 General Monitoring Requirements	21
B109 General Recordkeeping Requirements	22
B110 General Reporting Requirements	23
B111 General Testing Requirements	24
B112 Compliance	27
B113 Permit Cancellation and Revocation	28
B114 Notification to Subsequent Owners	28
B115 Asbestos Demolition	28
B116 Short Term Engine Replacement	29
Part C MISCELLANEOUS	32
C100 Supporting On-Line Documents	32
C101 Definitions	32
C102 Acronyms	34

Comment [n2]: Please update to: **R7**

FACILITY SPECIFIC REQUIREMENTS

A100 Introduction

A. This permit PSD 3449-~~R6~~ supersedes all portions of Air Quality Permit PSD 3449, issued March 29, 2007, 3449R1-3449~~R5,~~ except the portion requiring compliance tests. Compliance test conditions from previous permits, if not completed, are still in effect, in addition to compliance test requirements contained in this permit

Comment [n3]: Please update to: **R7**.

Comment [n4]: Please update to: **R6.**

B. Fee Requirement: This permit is not effective until the Department receives the permit fee specified in the attached invoice. Pursuant to 20.2.75.12 NMAC, the permittee shall pay this invoice no later than thirty (30) days after the permit issue date (invoicing), unless the Department has granted an extension. The permit fee must be paid by this date regardless of the permittee's intended use or non-use of the permit or of the Department's cancellation of the permit. The permittee's failure to pay this fee when due will automatically void the permit and the Department may initiate enforcement action to collect the fee and assess a civil penalty for non-payment.

C. The permit limits, identified below, are based on a BACT determination, and any change or revision of these limits must be applied for and accompanied by a corresponding re-evaluation of the original BACT determination, meeting all requirements under PSD, including public notice. Compliance with the permit limits identified in this section, and shown below, are demonstrated by compliance with the emission limits shown in the Allowable Emissions tables elsewhere in this permit. The permit limits shown below do not impose additional monitoring, recordkeeping or reporting conditions to those stated elsewhere in this permit.

(1) For the turbines with duct burners, NOx emission limit of 2.0 ppmvd @ 15 percent O_2 averaged over 24 hours.

(2) For the turbines with duct burners, 2 ppmvd CO @ 15 percent O_2 averaged over 1-hour and 1 ppmvd VOC @ 15 percent O_2 based on daily rolling 24-hour average represents BACT.

(3) For the turbines with duct burners, BACT for SO_2 the use of pipeline quality natural gas.

~~(4)~~ For the turbines with duct burners, pipeline quality natural gas will be the only fuel used and is accepted as BACT. Each combustion turbine and duct burner will emit no more than 17.1 pounds per hour (lbs/hr) combined of particulate on a 24-hour average basis at the nominal firing rate of ~~1,885~~ MMBtu (LHV). Each combustion turbine (only) will emit no more than 11.3 pounds per hour (lbs/hr) combined of particulate on a 24-hour average basis at the nominal firing rate of ~~1,915.1 MMBtu (LHV) [sum of the turbine + duct burner 1585.1 + 330 = 1915.1].~~

Comment [n5]: Please update to: **2,027 MMBtu/hr (LHV) [sum of the turbine + duct burner 1,697 MMBtu/hr (LHV)+ 330 MMBtu (LHV) = 2,027 MMBtu/hr (LHV)]** Detailed calculations are provided with UA2 and reflect Mitsubishi latest Performance Data. Please note that since this sentence refers to particulate emission limits for the combustion turbine and duct burner, it is understood that the firing rate should also represent the combustion turbine and duct burner.

Comment [n6]: Please update to: **1,697 MMBtu/hr (LHV)** Detailed calculations are provided with UA2 and reflect Mitsubishi latest Performance Data. Please note that since this sentence refers to particulate emission limits for the combustion turbine only, it is understood that the firing rate should also represent the combustion turbine only.

Comment [n7]: Please update to: **R7**

The combustion turbine and duct burner shall also meet the ~~0.0071~~ lb/MMBtu (turbine only) and ~~0.0089~~ lb/MMBtu as BACT limits.

Comment [n8]: Please update to: **0.007 lb/MMBtu (LHV)(turbine only)** Detailed calculations are provided with UA2 and reflect Mitsubishi latest Performance Data.

Comment [n9]: Please update to: **0.008 lb/MMBtu (LHV) (turbine and duct burner)** Detailed calculations are provided with UA2 and reflect Mitsubishi latest Performance Data.

(5) For the emergency generator and fire water pump, BACT is the utilization of engine design and good combustion practices through the use of turbocharging and aftercoolers.

(6) For the emergency generator and fire water pump, good combustion practices is BACT for CO and VOC emissions.

(7) For the emergency generator and fire water pump, BACT for SO_2 the use of low sulfur diesel fuel.

(8) For the emergency generator, BACT for PM_{10} was injection timing retardation, and lean burn combustion, utilization of engine design and good combustion practices through the use of turbocharging and aftercoolers.

(9) For the fire water pump, BACT for PM_{10} was injection timing retardation, and lean burn combustion, utilization of engine design and good combustion practices through the use of turbocharging and aftercoolers.

(10) For the Fuel Gas Heaters, BACT for NOx is the emission rate of 0.054 lb/mmBTU, which was the lowest emission rate from the RBLC database at the time.

(11) For the Fuel Gas Heaters, BACT is the use of pipeline quality natural gas and utilizing good combustion control practices with a CO limit of 0.03 lb/mmBTU, and a VOC limit of 0.005 lb/mmBTU.

(12) For the Fuel Gas Heaters, BACT will be minimizing SO_2 emissions by using pipeline quality natural gas and utilizing good combustion control practices while meeting the SO_2 emission limit of 0.0006 lb/mmBTU based on the AP-42 emission factor (based on natural gas with 2,000 grains/million standard cubic feet).

(13) For the Fuel Gas Heaters, BACT will consist of minimizing PM/PM10 emissions by using pipeline quality natural gas and utilizing good combustion control practices while meeting the PM/PM10 emission limit of 0.007 lb/MMBtu, which was the lowest emission rate from the RBLC at the time.

(14) For the Cooling Towers, BACT for PM_{10} will be the use of a state of the art, high efficiency drift eliminator that will limit total drift to 0.001percent of the circulated water flow.

A101 <u>Permit Duration (expiration)</u>

A. The term of this permit is permanent unless withdrawn or cancelled by the Department.

Comment [n10]: Please update to:
R7

A102 Facility: Description

A. This facility is a natural gas fueled, nominal 600 MW ~~gross~~ output power plant with two advanced firing temperature, Mitsubishi 501F combustion turbine generators (CTGs), each provided with its own heat recovery steam generator (HRSG) including duct burners, a single condensing, reheat steam turbine generator (STG), and an air cooled condenser serving the STG. The plant generates electricity for sale to Southwestern Public Service Company, its successors or assigns.

Comment [n11]: Please update to:
net

B. This facility is located at UTM Zone 13, UTM Easting 658.41 km, UTM Northing 3,622.42 km, in Township 18-S, Range 36-E, Sections 24, approximately 9 miles west of Hobbs, New Mexico in Lea County. This facility is a stationary source and not allowed to relocate.

C. ~~This technical revision pursuant to 20.2.72.219.B.1.e. NMAC is to adjust the TSP/PM10 lb/MMBtu permit limit of 0.015 for the combustion turbines operating with (0.0089 lb/MMBtu) or without duct burners (0.0071 lb/MMBtu) to align with the TSP/PM10 lb/hr and tpy permit limits based on recent performance test results. The revision will not result in an increase of emissions. The proposed revision also satisfies the requirement of PSD Permit 3449, Condition 2.e (to be removed) based on the results of the most recent performance test. This description is for informational purposes only and is not enforceable~~.

Comment [n12]: Please update to:
This technical revision pursuant 20.2.72.200.A(2) NMAC and 20.2.74.200.A NMAC, is to adjust the CTG and CTG+HRSG mass emission rates following an upgrade of both CTGs by replacing the Row 1 Blade Ring and Rows 1 and 2 Turbine Blades and Vanes with new parts that have superior cooling technology. This change will result in the need for less cooling air and will have a corresponding increase in fuel consumption, exhaust flow rate, temperature, and electricity production. This description is for informational purposes only and is not enforceable.

D. Table 102.A and Table 102.B show the total potential emissions from this facility for information only, not an enforceable condition, excluding exempt sources or activities.

Table 102.A: Total Potential Criteria Pollutant Emissions from Entire Facility

Pollutant	Emissions (tons per year)
Nitrogen Oxides (NOx)	~~152.4~~
Carbon Monoxide (CO)	~~312.5~~
Volatile Organic Compounds (VOC)	~~77.0~~
Sulfur Dioxide (SO_2)	~~80.7~~
Total Suspended Particulates (TSP)	~~122.0~~
Particulate Matter less than 10 microns (PM_{10})	~~121.4~~

Comment [n13]: Please update NOx emissions to:
189.1 tpy
Detail emission rate calculations are provided in UA2 Form

Comment [n14]: Please update CO emissions to:
313.0 tpy
No update is requested. Title V Permit No. P244-M4 authorized 313.0 tpy

Comment [n15]: Please update VOC emissions to:
97.5 tpy
Detail emission rate calculations are provided in UA2 Form

Comment [n16]: Please update SO_2 emissions to:
80.9 tpy
No update is requested. Title V Permit No. P244-M4 authorized 80.9 tpy

Comment [n17]: Please update TSP emissions to:
121.9 typ
No update is requested. Title V Permit No. P244-M4 authorized 121.9 tpy

Comment [n18]: Please update PM_{10} emissions to:
121.3 tpy
No update is requested. Title V Permit No. P244-M4 authorized 121.3 tpy

Comment [n19]: Please include:
Particulate Matter less than 2.5 micros (PM2.5) 120.4 tpy

Table 102.B: Total Potential HAPS that exceed 1.0 ton per year

Pollutant	Emissions (tons per year)
Formaldehyde	~~1.9~~
Ammonia (TAP)	~~146.6~~
Total HAPs**	3.2

* HAP emissions are already included in the VOC emission total.

** The total HAP emissions may not agree with the sum of individual HAPs because only individual HAPs greater than 1.0 tons per year are listed here.

Comment [n20]: Please update Formaldehyde emissions to:
1.1 tpy
Detailed emission rate calculations are provided in UA2 Form

Comment [n21]:
Please update Ammonia emissions to:
281.3 tpy
No update is requested. Title V Permit No. P244-M4 authorized 281.3 tpy

Comment [n22]: Please update to: **R7**

A103 Facility: Applicable Regulations

A. The permittee shall comply with all applicable sections of the requirements listed in Table 103.A.

Table 103.A: Applicable Requirements

Applicable Requirements	Federally Enforceable	Unit No.
20.2.1 NMAC General Provisions	X	Entire Facility
20.2.3 NMAC Ambient Air Quality Standards	X	Entire Facility
20.2.7 NMAC Excess Emissions	X	Entire Facility
20.2.61 NMAC Smoke and Visible Emissions	X	HOBB-1, HOBB-2, DB-1, DB-2, FH-1, FH-2, FH-3, G-1 and FP-1
20.2.70 NMAC Operating Permits	X	Entire Facility
20.2.71 NMAC Operating Permit Emission Fees	X	Entire Facility
20.2.72 NMAC Construction Permit	X	Entire Facility
20.2.73 NMAC Notice of Intent and Emissions Inventory Requirements	X	Entire Facility
20.2.75 NMAC Construction Permit Fees	X	Entire Facility
20.2.77 NMAC New Source Performance	X	HOBB-1, HOBB-2
20.2.84 NMAC Acid Rain Permit	X	Entire Facility
20.2.300, 301 Greenhouse Gas Emissions Reporting and Verification	X	Entire Facility
40 CFR 50 National Ambient Air Quality Standards	X	Entire Facility
40 CFR 60, Subpart A, General Provisions	X	HOBB-1, HOBB-2
40 CFR 60, Subpart KKKK, Stationary Combustion Turbines	X	HOBB-1, HOBB-2
40 CFR 72 Title IV Acid Rain	X	Entire Facility
40 CFR 73 Title IV Acid Rain Sulfur Dioxide Allowance Emissions	X	HOBB-1, HOBB-2
40 CFR 75 Title IV Acid Rain Continuous Emission Monitoring	X	HOBB-1, HOBB-2

A104 Facility: Regulated Sources

A. Table 104 lists all of the emission units authorized for this facility. Emission units that were identified as exempt activities and/or equipment (as defined in 20.2.72.202 NMAC) not regulated pursuant to the Act are not included.

Table 104: Regulated Sources List

Unit No.	Source Description	Make Model	Serial No.	Capacity	Manufacture Date
HOBB-1	Combustion Turbine (CT)	Mitsubishi Heavy Industries M501F-~~F3~~	T487	~~167 MW (1,585.1 MMBtu/hr nominal)~~	~~2007~~
HOBB-2	Combustion Turbine (CT)	Mitsubishi Heavy Industries M501F-~~F3~~	T488	~~167 MW (1,585.1 MMBtu/hr nominal)~~	~~2007~~
DB-1	Forney Duct Burner	Forney	913864	330 MM Btu/hr	~~2001~~
DB-2	Forney Duct Burner	Forney	913865	330 MM Btu/hr	~~2001~~
AC-1	Auxiliary Cooling Tower	Baltimore Air Cooler, FXV3-364-100	U014673101	9,500 gpm	2002
AC-2	Auxiliary Cooling Tower	Baltimore Air Cooler, FXV3-364-100	U014673102	9,500 gpm	2002
AC-3	Auxiliary Cooling Tower	Baltimore Air Cooler, FXV3-364-100	U014673103	9,500 gpm	2002
IC-1	Inlet Chiller	Baltimore Aircoil, 331132A	U014673104	5,898 gpm	2002
IC-2	Inlet Chiller	Baltimore Aircoil, 331132A	U014673105	5,898 gpm	2002
IC-3	Inlet Chiller	Baltimore Aircoil, 331132A	U014673106	5,898 gpm	2002
FH-1	Fuel Gas Heater	Rheos, 2400	A07193433	2.4 MMBtu/hr	~~2007~~
FH-2	Fuel Gas Heater	Rheos, 2400	A07193434	2.4 MMBtu/hr	~~2007~~
FH-3	Fuel Gas Heater	Rheos, 2400	A07193435	2.4 MMBtu/hr	~~2007~~
G-1	Standby Generator	Volvo Penta, D1641GEP	D16*021102*C3*A	565kW	2008
FP-1	Diesel Fire Pump	Detroit Diesel, PDFFP06 FA-IIV	6VF-300006	443 Hp	2001
SCR-1	**Selective Catalytic Reduction**	**Peerless Manufacturing Co.**	**70418A**	**< 2.0 ppmvd @ 15% O2 averaged over 24 hours**	**2008**
SCR-2	**Selective Catalytic Reduction**	**Peerless Manufacturing Co.**	**70418B**	**< 2.0 ppmvd @ 15% O2 averaged over 24 hours**	**2008**

Comment [n25]: Please update HOBB-1 manufacture date to:
2001
This update was completed with P244-M4

Comment [n23]: Please change HOBB-1 Make Model to:
F4

Comment [n24]: Please update HOBB-1 capacity to:
180 MW
1,697 MMBtu/hr (LHV) nominal
Detailed data is provided with UA2 and reflects Mitsubishi latest Performance Data

Comment [n28]: Please update HOBB-2 manufacture date to:
2001
This update was completed with P244-M4

Comment [n26]: Please change HOBB-2 Make Model to:
F4

Comment [n27]: Please update HOBB-2 capacity to:
180 MW
1,697 MMBtu/hr (LHV) nominal
Detailed data is provided with UA2 and reflects Mitsubishi latest Performance Data

Comment [n29]: Please update DB-1 manufacture date to:
2007
This update was completed with Title V permit No. P244-M4

Comment [n30]: Please update DB-2 manufacture date to:
2007
This update was completed with Title V permit No. P244-M4

Comment [n31]: Please update FH-1 manufacture date to:
2008
This update was completed with Title V permit No. P244-M4

Comment [n32]: Please update FH-1 manufacture date to:
2008
This update was completed with Title V permit No. P244-M4

Comment [n33]: Please update FH-1 manufacture date to:
2008
This update was completed with Title V permit No. P244-M4

Comment [n34]: Please incorporate SCR-1 as authorized Title V permit No. P244-M4

Comment [n35]: Please incorporate SCR-2 as authorized Title V permit No. P244-M4

Comment [n36]: Please update to: **R7**

B. Stack Height of CT/DB: To demonstrate compliance with 20.2.72.502 NMAC Table A–Non-carcinogens, and in conjunction with Table-C Stack Height Correction Factor, the height of each CT/DB stack shall be no less than 165 feet above ground.

C. All equipment, including emission monitoring equipment and the cooling tower, shall be installed, operated and maintained in a manner consistent with the manufacturer's intended purpose, specifications and recommended procedures.

A105 Facility: Control Equipment

A. Table 105 lists all the pollution control equipment required for this facility. Each emission point is identified by the same number that was assigned to it in the permit application.

Table 105: Control Equipment List:

Control Equipment Unit No.	Control Description	Pollutant being controlled	Control for Unit No.1
SCR-1	Selective Catalytic Reduction	NOx	HOBB-1/DB-1
SCR-2	Selective Catalytic Reduction	NOx	HOBB-2/DB-2
CAT-1	Catalytic Oxidation	CO, VOC, HAP	HOBB-1/DB-1
CAT-2	Catalytic Oxidation	CO, VOC, HAP	HOBB-2/DB-2
N/A	High Efficiency Drift Eliminator	PM10	IC-1
N/A	High Efficiency Drift Eliminator	PM10	IC-2
N/A	High Efficiency Drift Eliminator	PM10	IC-3
N/A	Dry Low Burner	NOx	FH-1
N/A	Dry Low Burner	NOx	FH-2
N/A	Dry Low Burner	NOx	FH-3
N/A	Dry Low Burner	NOx	HOBB-1/DB-1
N/A	Dry Low Burner	NOx	HOBB-2/DB-2

1 Control for unit number refers to a unit number from the Regulated Equipment List

A106 Facility: Allowable Emissions

A. The following table(s) list the emission units and their allowable emission limits. (40 CFR 50, 40 CFR 60, Subparts A and KKKK, 20.2.72.210.A and B.1 NMAC).

Table 106.A: Allowable Emissions for Turbine Generators
(Represents emissions on an individual Combustion Turbine basis unless otherwise noted)

Pollutant	CT w/Duct Burner	CT w/o Duct Burner	CTG[10] Startup & Shutdown	Averaging Period
NO_2[2] (lbs/hr)	18.1	14.5	N/A	24-hour average based on CEMS data
NO_2[2,3] (ppmv) dry @ 15% O_2	2.0		96[1]	24-hour average based on CEMS data
NO_2[2,4] (lb/MWh)	0.43		N/A	Daily rolling 30-day average
NO_2[2] (tons/yr), combined	~~150~~			Daily rolling 365-day total
CO (lbs/hr), each	11.0	8.8	N/A	1-hour average
CO[5] (ppmv) dry @ 15% O_2, each	2.0		3125[1]	1-hour average
CO (tons/yr), combined	311.6			Daily rolling 365-day total
VOC (lbs/hr), each	~~1.2~~	~~0.9~~	N/A	24-hour average, calculation based on ~~emission factor determined~~ from compliance test data
VOC[6] (ppmv) dry @ 15% O_2, each	1.0		~~N/A~~	Daily rolling 24-hour average
VOC (tons/yr), combined	~~76.8~~			Daily rolling 365-day total
SO_2 (lbs/hr), each	10.7	8.4	N/A	1-hour average, calculation based on ~~H_2S~~ content of fuel
SO_2[7] (lb/MMBtu), each	0.06		N/A	Daily rolling 30-day average
SO_2 (tons/yr), combined	80.6			Daily rolling 365-day total
TSP/PM_{10}[8] (lbs/hr), each	17.1	11.3	~~8.3~~	24-hour average, calculation based on ~~emission factor determined~~ from compliance test data
TSP/PM_{10} (lb/MMBtu), each[11]	~~0.0089~~	~~0.0071~~	N/A	Daily rolling 24-hour average
TSP/PM_{10} (tons/yr), combined	120.4			Daily rolling 365-day total
NH_3 (lbs/hr)	~~16.7~~		N/A	Calculation based on ~~compliance test data~~
~~NH_3[9] (ppm) dry @ 15% O_2, each~~	~~5~~		~~N/A~~	
NH_3 (tons/yr), combined	~~146.6~~		N/A	Daily rolling 365-day total

[1] CTG Startup not-to-exceed emissions are based on manufacturer's data + a 25% safety factor as a 1-hr average; Compliance with these limits shall be demonstrated by the monitoring required in Condition A401.C.

Comment [n37]: Please update to:
R7

Comment [n38]: Please update NO_2 combined tons/yr to:
185.6 tpy
Detailed data is provided with UA2 and reflects Mitsubishi latest Performance Data.

Comment [n39]: Please update CTG startup & shutdown CO concentration to:
3,000 ppmvd @ 15% O2
Detailed data is provided with UA2 and reflects Mitsubishi latest Performance Data

Comment [n40]: Please update CT w/Duct Burner VOC hourly mass emission rate to:
2.8 lb/hr
Detailed data is provided with UA2 and reflects Mitsubishi latest Performance Data

Comment [n41]: Please update CT w/o Duct Burner VOC hourly mass emission rate to:
2.4 lb/hr
Detailed data is provided with UA2 and reflects Mitsubishi latest Performance Data

Comment [n42]: Please update CTG startup & shutdown VOC concentration to:
900 ppmvd @ 15% O2
Detailed data is provided with UA2 and reflects Mitsubishi latest Performance Data

Comment [n43]: Please update VOC combined tons/yr to:
97.2 tpy
Detailed data is provided with UA2 and reflects Mitsubishi latest Performance Data

Comment [n44]: Please update to:
Total sulfur content of the fuel

Comment [n45]: Please update CTG startup & shutdown TSP/PM_{10} concentration to:
N/A

Comment [n46]: Please update CT w/Duct Burner TSP/PM10 input rate to:
0.008 lb/MMBtu
Detailed data is provided with UA2 and reflects Mitsubishi latest Performance Data

Comment [n47]: Please update CT w/o Duct Burner TSP/PM10 input rate to:
0.007 lb/MMBtu
Detailed data is provided with UA2 and reflects Mitsubishi latest Performance Data

Comment [n48]: Please update NH3 hourly emission rate to:
32.1 lb/hr
This modification was authorized by P244-M4.

Comment [n49]: Please remove NH_3 ppmvd from table 106A. This was previously accepted on Title V permit No. P244-M4. We would like for both permits to be identical in terms of emission rate enforceable allowables.

Comment [n50]: Please update NH3 combined tons/yr to:
281.3 tpy
This modification was authorized by P244-M4.

[2] Nitrogen oxide emissions include all oxides of nitrogen expressed as NO_2.
[3] The NO_2 limit of 2.0 ppmvd is based on the SCR BACT determination submitted with the application.
[4] This NO_2 limit is in accordance with Table 1 to NSPS Subpart KKKK.
[5] The CO limit of 2.0 ppmvd is based on the CatOx BACT determination submitted with the application.
[6] The VOC limit of 1.0 ppmvd is based on the CatOx BACT determination submitted with the application.
[7] The SO_2 limit is in accordance with 40 CFR 60.4330.
[8] The TSP/PM_{10} limits include condensable particulate matter.
[9] ~~The NH_3 limit of 5 ppmvd was insisted by EPA Region 6 instead of the 10 ppmvd requested in the application based on the NOx BACT determination.~~
[10] "N/A" indicates there is no limit for this category during startup and shutdown
[11]. ~~PSD3449R6 reduced lb/MMBtu from 0.015 combine to 0.0089 and 0.0071.~~

Table 106.B: Allowable Emissions – Auxiliary Equipment

Unit No.	[1]NOx pph	NOx tpy	CO pph	CO tpy	VOC pph	VOC tpy	SO_2 pph	SO_2 tpy	TSP pph	TSP tpy	PM_{10} pph	PM_{10} tpy
[4]IC-1, IC-2, IC-3A & B	-[3]	-	-	-	-	-	-	-	<	1.1	<	0.5
FH-1, FH-2 FH-3 A&B4	~~0.1~~	~~0.3~~	~~0.1~~	~~0.5~~	-	0.2	-	-	0.1	0.2	0.1	0.2
FP-1 A&B	3.5	<	1.4	<	0.8	<	0.7	<	<	<	<	<
G-1 A&B	6.3	1.6	0.9	0.2	<	<	<	<	<	<	<	<
AC-1, AC-2, AC-3A& B4	<	<	<	<	<	<	<	<	<	<	<	<
TOTAL		~~1.9~~		~~0.7~~		0.2				1.3		0.7

[1] Nitrogen Oxide emissions include all oxides of nitrogen expressed as NO_2.
[2] "-" indicates that in accordance with the application, emissions of this pollutant are not expected.
[3] "<"indicates the application represented emissions less than 1.0 pph or 1.0 tpy for this pollutant. Allowable limits are not imposed on this level of emissions, except for flares and pollutants with controls.
[4] Emission limits are the combined totals for these emission units. Unit AC-3A&B, FH-3A&B, IC-3A&B added by NSR 3449-R2.

B. For Units HOBB-1 and HOBB-2, NOx and CO emissions shall not exceed 2 ppmv-dry, and VOC emissions shall not exceed 1 ppmv-dry @15% Oxygen.

C. Total allowables are for information only, not enforceable conditions, and used to determine annual Operating Fees. Based on the authorized hours of operation in condition A108.A, the following would be the totals used for fee purposes.

Table 106.C: Allowable Emissions for Annual Fees

	NOx tpy	CO tpy	VOC tpy	SO_2 tpy	TSP tpy
Turbines	~~150~~	311.6	~~76.8~~	80.6	120.4
AUX	~~1.9~~	~~0.7~~	0.2	0	1.3
Total	~~151.9~~	~~312.3~~	~~77.0~~	80.6	121.7

Comment [n51]: Please update to: **R7**

Comment [n52]: Please remove from Table 106A as conducted in Title V Permit P244-M4.

Comment [n53]: Please update to: **PSD3449R7 updated to 0.008 lb/MMBtu (LHV) and 0.007 lb/MMBtu (LHV).**

Comment [n54]: No changes are being completed through this application on the auxiliary equipment. However, rates represented in this table do not match latest Title V Permit No. P244-M4. Please update this table to latest rates authorized as per Title V Permit:
0.4 pph NOx
1.7 tpy NOx
0.2 pph CO
1.0 tpy CO

Comment [n55]: No changes are being completed through this application on the auxiliary equipment. However, rates represented in this table do not match latest Title V Permit No. P244-M4. Please update this table to latest rates authorized as per Title V Permit:
3.3 tpy NOx
1.2 tpy CO

Comment [n56]: Please update comment to match latest Title V Permit No. P244-M4 as follows: **NSR 3449-R2 combined emissions into one total for these emission units which are the maximum possible rates for either Operating Scenario A-100% Load w/Duct Burner or B-100% Load w/o Duct Burner..**

Comment [n57]: Please update to:
185.6
Detailed data is provided with UA2 and reflects Mitsubishi latest Performance Data

Comment [n58]: Please update to:
97.2
Detailed data is provided with UA2 and reflects Mitsubishi latest Performance Data

Comment [n59]: No changes are being completed through this application on the auxiliary equipment. However, rates represented in this table do not match latest Title V Permit No. P244-M4. Please update this table to latest rates authorized as per Title V Permit:
3.3 tpy NOx
1.2 tpy CO

Comment [n60]: Please update totals:
188.9 tpy NOx
312.8 tpy CO
97.4 tpy VOC

Comment [n61]: Please update to: **R7**

A107 Facility: Allowable Startup, Shutdown, & Maintenance (SSM) Emissions]

A. The permittee shall monitor and record all instances and amounts of excess emissions during startup, shutdowns and malfunctions, including those associated with control equipment. NOx excess emissions shall be determined in accordance with 40 CFR 60.4350. These records shall be made available to inspectors upon request.

B. The following conditions have also been applied to this facility:

(1) Excess emissions resulting from startup, shutdown, or an upset shall count towards the annual emission limits.

(2) ~~The facility is limited to 300 hot starts of Units HOBB-1 and HOBB-2 on a monthly rolling 12-month total basis~~. The Permittee shall maintain records of the monthly rolling 12-month totals.

Comment [n62]: Please update to: **CTG startups and shutdowns are expected to occur for a maximum of 470 hours per year per turbine. The duration of the startups will be minimized to the best extent possible for each unit. The number and/or duration of planned startup and shutdown events are not to be construed as binding. Rather, the facility will demonstrate compliance by meeting the stated short and long term mass emission rates and concentration limits.**

Detailed backup information is provided in Section 6 of the UA3 and detailed calculations are provided in UA2 form.

(3) The following definitions expand upon the existing definitions of 20.2.7.7 NMAC:

(a) Startup: Startup begins when the fuel flow is detected by the fuel monitoring system and ends when the gross power output from the gas turbine first reaches 70% of the rated capacity adjusted for ambient temperature.

(b) Shutdown: Shutdown begins when the gas turbine generator load is less than or equal to 70% of the rated capacity adjusted for ambient temperature. Shutdown ends when the fuel flow is no longer detected by the fuel monitoring system.

(c) Downtime or unit off-line is that time between the end of shutdown and the beginning of startup.

A108 Facility: Allowable Operations

A. This facility is authorized for continuous operation. No monitoring, recordkeeping, and reporting requirements to demonstrate compliance with continuous hours of operation.

B. Hours of Operation For Units G-1 and FP-1

Requirement:

(1) In accordance with 20.2.72.202.B.3 NMAC, the Standby Generator (G-1) shall only be operated during the unavoidable loss of commercial power or for necessary maintenance activities, and shall be operated less than 500 hours per year, based on a monthly rolling 12-month total basis. Any maintenance activities conducted on the standby generator are included in the 500 hours per year total.

(2) The diesel fire water pump (FP-1) shall not operate more than 100 hours per year.

Comment [n63]: Please update to: **R7**

Monitoring: None
Recordkeeping: The permittee shall keep record in accordance with Section B109.
Reporting: The permittee shall report in accordance with Section B110.

A109 Facility: Reporting Schedules

A. For Title V, Operating Permit: A Semi-Annual Report of monitoring activities is due within 45 days following the end of every 6-month reporting period.

B. For Title V, Operating Permit: The Annual Compliance Certification Report is due within 30 days of the end of every 12-month reporting period. The 12-month reporting period starts on January 1st of each year.

A110 Facility: Fuel Sulfur Requirements

A. For Units HOBB-1 HOBB-2, FH-1, FH-2, and FH-3

Requirement: All combustion emission units shall combust only natural gas containing no more than 2.0 grains of total sulfur per 100 dry standard cubic feet.
Monitoring: None. In accordance with EPA document EMTIG – GD-009 (March 12, 1990), no daily monitoring of fuel bound nitrogen is required for Units HOBB-1 and HOBB-2 because they combust only pipeline quality natural gas.
Recordkeeping: The permittee shall demonstrate compliance with the natural gas or fuel oil limit on total sulfur content by maintaining records of a current, valid purchase contract, tariff sheet or transportation contract for the gaseous or liquid fuel, or fuel gas analysis, specifying the allowable limit or less. Alternatively, compliance may be demonstrated by keeping a receipt or invoice from a commercial fuel supplier, with each fuel delivery, which shall include the delivery date, the fuel type delivered, the amount of fuel delivered, and the maximum sulfur content of the fuel. If fuel gas analysis is used, the analysis shall not be older than one year.
Reporting: The permittee shall report in accordance with Section B110

.

A111 Facility: 20.2.61 NMAC Opacity

A. For Units HOBB-1 HOBB-2, FH-1, FH-2, and FH-3

Requirement: Combustion units shall not exceed 20% opacity.
Monitoring: Use of natural gas fuel constitutes compliance with 20.2.61 NMAC unless opacity exceeds 20% averaged over a 10-minute period. When any visible emissions are observed during steady state operation, opacity shall be measured over a 10-minute period, in accordance with the procedures at 40 CFR 60, Appendix A, Method 9 as required by 20.2.61.114 NMAC.
Recordkeeping: The permittee shall record dates of any opacity measures and the corresponding opacity readings.
Reporting: The permittee shall report in accordance with Section B110.

Comment [n64]: Please update to: **R7**

B. For Units G-1 and FP-1

Requirement: Combustion units shall not exceed 20% opacity.
Monitoring: Once every calendar year, an opacity measurement shall be performed on each Unit for a minimum of 10 minutes in accordance with the procedures of 40 CFR 60, Appendix A, Method 9.
Recordkeeping: The permittee shall record the opacity measures with the corresponding opacity readings.
Reporting: The permittee shall report in accordance with Section B110.

EQUIPMENT SPECIFIC REQUIREMENTS

OIL AND GAS INDUSTRY

A200 Oil and Gas Industry - Not Required

CONSTRUCTION INDUSTRY - AGGREGATE

A300 Construction Industry - Not Required

POWER GENERATION INDUSTRY

A400 Power Generation Industry

A. This section has common equipment related to most Electric Service Operations (SIC-4911).

A401 Turbines

A. Periodic Testing (Units HOBBS-1/DB-1 and HOBBS-2/DB-2)

Requirement: The permittee shall comply with the allowable emission limits.
Monitoring: The permittee shall test using a portable analyzer subject to the requirements and limitations of Section B108, General Monitoring Requirements. For periodic testing of NOx and CO emissions tests shall be carried out as described below. Test results that demonstrate compliance with the NOx and CO emission limits shall also be considered to demonstrate compliance with the VOC emission limits. (a) The monitoring period shall be annually. (b) The first test shall occur within the first monitoring period occurring after permit issuance. (c) All subsequent monitoring shall occur in each succeeding monitoring period. No two monitoring events shall occur closer together in time than 25% of a monitoring period.

Comment [n65]: Please update to: **R7**

(d) Follow the General Testing Procedures of Section B111.
Recordkeeping: The permittee shall maintain periodic emissions test records in accordance with Section B109.
Reporting: The permittee shall report in accordance with Section B110.

B. 40 CFR 60, Subpart KKKK (Units HOBBS-1/DB-1 and HOBBS-2/DB-2)

Requirements: HOBB-1 and HOBB-2 shall comply with the standards for nitrogen oxide and sulfur dioxide of 40 CFR Part 60, Subpart KKKK.
Monitoring: The permittee shall comply with the applicable monitoring and testing requirements of 40 CFR 60.4345. The permittee shall comply with the combustion turbine monitoring requirements of 40 CFR 60 Subparts A and KKKK. The permittee may use the Department's Custom Fuel Monitoring Schedule in Attachment A to meet the requirements of 40 CFR 60.4370.
Recordkeeping: The permittee shall comply with the applicable recordkeeping requirements of 40 CFR 60.7.
Reporting: The permittee shall comply with the applicable reporting requirements of 40 CFR 60.4375 and 60.4395.

C. Continuous Emission Monitoring (CEMS) For Units HOBB-1,HOBB-2, DB-1, DB-2, SCR-1 and SCR-2

Requirement: 1. The exhaust stacks for these units shall be equipped and maintained with NOx, CO and O_2 CEMS. The permittee shall maintain the units according to manufacturer's requirements. 2. The NOx and O_2 CEMS shall be designed, installed and certified in accordance with 40 CFR Part 75. Alternatively, the NOx CEMS may be installed and certified in accordance with the provisions of 40 CFR Part 60, Appendix B, Performance Specification 2 (PS2) – Specifications and Test Procedures for SO_2 and NOx Continuous Emissions Monitoring Systems in Stationary Sources. 3. The CO CEMS shall be designed, installed and certified in accordance with the provisions of 40 CFR Part 60, Appendix B, Performance Specification 4A – Specification and Test Procedure for Carbon Monoxide Continuous Emissions Monitoring Systems in Stationary Sources. Following certification testing, the CO CEMS shall be operated in accordance with the provisions of 40 CFR Part 60, Appendix F – Quality Assurance Requirements for Continuous Emissions Monitoring Systems.
Monitoring: 1. All CEMS shall comply with the requirements of 40 CFR 60.13, Monitoring Requirements. 2. The NOx CEMS shall also comply with the requirements of 40 CFR 60.4345. 3. The CEMS shall monitor all instances of excess emissions during startup, shutdowns and malfunctions, including those associated with control equipment upset.
Recordkeeping: (1) The permittee shall keep a quality assurance plan for all CEMS in accordance with 40 CFR 60.4345 and 40 CFR 75, Appendix B.

Comment [n66]: Please update to: **R7**

(2) The permittee shall monitor and record all instances in which the CEMS are not in operation or accurately recording stack concentrations. (3) The permittee shall ensure that all the monitoring systems required by this permit are installed at the facility prior to initial start-up to meet the following requirements: i) The NOx and CO_2 or O_2 CEMS shall be audited in accordance with 40 CFR Part 60 Subpart KKKK or 40 CFR Part 75. The CO CEMS shall be audited in accordance with 40 CFR Part 60, Appendix F. ii) The reported output of the CEMS shall be in: a. ppmv of NOx and CO at dry standard conditions; b. ppmv of NOx and CO corrected to 15% oxygen at dry standard conditions; and lbs/hr of NOx and CO. iii) The QA/QC plan required by 40 CFR Part 60, Appendix F, shall include a data substitution procedure for the CO CEMS that is consistent with requirements of 40 CFR Part 75's missing data procedure for SO2 data. The QA/QC plan shall be submitted to the Department with the test protocols. (4) For each CEMS, the permittee shall maintain records of performance test measurements, all performance evaluations, calibration checks, and all adjustment and maintenance activities. (5) The permittee shall maintain records of the daily average NOx and CO readings from the CEMS in parts per million by volume (on a dry standard cubic foot basis, corrected to 15% O2) and lbs/hr.
Reporting: All CEMS shall be subject to the notification requirements of 40 CFR 60.7. The QA/QC plan shall be submitted to the Department with the Compliance Test Protocols.

D. Temperature and Static Pressure Drop for Catalyst Beds For Units HOBB-1 and HOBB-2

Requirement: The permittee shall monitor the temperature and static pressure drop. A thermocouple shall be installed at the inlet of the catalyst bed of SCR-1 and SCR-2.
Monitoring: The permittee shall continuously monitor the temperature at the inlet of each SCR catalyst bed, and static pressure drop from the inlet of the CatOx to the outlet of the SCR catalyst bed.
Recordkeeping: (1) The permittee shall monitor and record all the instances in which the monitors above are not in operation or out of calibration specifications. (2) The permittee shall develop and maintain on-site a procedure to monitor SCR catalyst activity, to predict its remaining active life and to define parameters for catalyst replacement.
Reporting: The permittee shall report in accordance with Section B110.

Comment [n67]: Please update to: **R7**

E. Ammonia Injection For Units HOBB-1 and HOBB-2

Requirement: (1) Ammonia injection shall commence when the inlet temperature to the ammonia injection grid has exceeded 582 ^{0}F. This condition is included to reduce NOx emissions during startup. (2) The facility shall not store or use aqueous ammonia in concentrations greater than 19% in SCR-1 and SCR-2. However, if aqueous ammonia in concentrations greater than 20% is utilized, storage shall be limited to 20,000 pounds. (3) Annual compliance testing is required on Stacks 1 and 2 for ammonia. When the measured concentration equals or exceeds 75% of the permitted limit, the permittee shall determine the catalyst activity and schedule replacement in accordance with the procedures required in A401.D.
Monitoring: The permittee shall monitor the quantity of aqueous ammonia injected into each SCR system on an hourly basis.
Recordkeeping: The ammonia injection systems shall be inspected on a daily basis to insure proper operation.
Reporting: The permittee shall report in accordance with Section B110.

F. Mode of Operation For Units HOBB-1 and HOBB-2

Requirement: Mode of Operation for each turbine.
Monitoring: The permittee shall monitor and record the total unit operating hours, as defined in 40 CFR 60.4420, for each CT on an hourly, daily, monthly and monthly rolling 12-month total basis.
Recordkeeping: For each turbine and each mode, the permittee shall record the operating mode (startup, non-duct burning, duct burning, or shutdown), date, the mode start time and end time.
Reporting: The permittee shall report in accordance with Section B110.

G. Gas Flow Rate For Units HOBB-1 and HOBB-2

Requirement: Natural gas consumption rate. A natural gas fuel flow monitor or equivalent measuring device shall be installed on Units HOBB-1, HOBB-2, DB-1 and DB-2 and meet the initial certification requirements of 40 CFR Part 75, Appendix D.2.1.5, and the quality assurance requirements of 40 CFR Part 75, Appendix D.2.1.6.
Monitoring: (1) The permittee shall monitor the total volumetric flow of natural gas consumed by each CT and duct burner on a daily, monthly, and monthly rolling 12-month total basis. (2) For time periods outside of compliance testing, exhaust gas flow shall be determined by EPA Method 19 (F factors) or another approved method as determined by the Department.
Recordkeeping: The permittee shall keep records in accordance with Section B109.
Reporting: The permittee shall report in accordance with Section B110.

Comment [n68]: Please update to: **R7**

H. Cooling Tower Monitoring (Unit AC-1)

Requirement: (1) The cooling towers shall be inspected on a daily basis to insure they are being operated as described in the permit application. (2) The facility shall not use any cooling water additives containing heavy metals such as chromium in the cooling tower. (3) The total dissolved solids (TDS) from the cooling tower basin shall not exceed 3,000 parts per million (ppm).
Monitoring: The permittee shall monitor and record the TDS concentration (ppm) in the cooling tower basins on a daily basis. A written copy of the procedure used to determine the TDS concentration shall be kept on-site and made available to the Department upon request.
Recordkeeping: The permittee shall keep records in accordance with Section B109.
Reporting: The permittee shall report in accordance with Section B110.

Comment [n69]: Please update to: **R7**

PART B GENERAL CONDITIONS

B100 Introduction

A. The Department has reviewed the permit application for the proposed construction/modification/revision and has determined that the provisions of the Act and ambient air quality standards will be met. Conditions have been imposed in this permit to assure continued compliance. 20.2.72.210.D NMAC, states that any term or condition imposed by the Department on a permit is enforceable to the same extent as a regulation of the Environmental Improvement Board.

B101 Legal

A. The contents of a permit application specifically identified by the Department shall become the terms and conditions of the permit or permit revision. Unless modified by conditions of this permit, the permittee shall construct or modify and operate the Facility in accordance with all representations of the application and supplemental submittals that the Department relied upon to determine compliance with applicable regulations and ambient air quality standards. If the Department relied on air quality modeling to issue this permit, any change in the parameters used for this modeling shall be submitted to the Department for review. Upon the Department's request, the permittee shall submit additional modeling for review by the Department. Results of that review may require a permit modification. (20.2.72.210.A NMAC)

B. Any future physical changes, changes in the method of operation or changes in restricted area may constitute a modification as defined by 20.2.72 NMAC, Construction Permits. Unless the source or activity is exempt under 20.2.72.202 NMAC, no modification shall begin prior to issuance of a permit. (20.2.72 NMAC Sections 200.A.2 and E, and 210.B.4)

C. Changes in plans, specifications, and other representations stated in the application documents shall not be made if they cause a change in the method of control of emissions or in the character of emissions, will increase the discharge of emissions or affect modeling results. Any such proposed changes shall be submitted as a revision or modification. (20.2.72 NMAC Sections 200.A.2 and E, and 210.B.4)

D. The permittee shall establish and maintain the property's Restricted Area, as identified in the most recent modeling plan for which the permittee received Department approval. (20.2.72 NMAC Sections 200.A.2 and E, and 210.B.4)

E. Applications for permit revisions and modifications shall be submitted to:

Program Manager, Permits Section

Comment [n70]: Please update to: **R7**

New Mexico Environment Department
Air Quality Bureau
~~1301 Siler Road, Building B~~
Santa Fe, New Mexico 87507-~~3113~~

Comment [n71]: Please update to: **525 Camino de los Marquez, Suite 1**

Comment [n72]: Please update to: **1816**

F. Pursuant to 20.2.72.210 NMAC, at all times, including periods of startup, shutdown, and malfunction, owners and operators shall, to the extent practicable, maintain and operate the source including associated air pollution control equipment in a manner consistent with good air pollution control practice for minimizing emissions. (20.2.72.210.A, 20.2.72.210.B, 20.2.72.210.C, 20.2.72.210.E NMAC)

B102 <u>Authority</u>

A. This permit is issued pursuant to the Air Quality Control Act (Act) and regulations adopted pursuant to the Act including Title 20, Chapter 2, Part 72 of the New Mexico Administrative Code (NMAC), (20.2.72 NMAC), Construction Permits and is enforceable pursuant to the Act and the air quality control regulations applicable to this source.

B. The Department is the Administrator for 40 CFR Parts 60, 61, and 63 pursuant to the delegation and exceptions of Section 10 of 20.2.77 NMAC (NSPS), 20.2.78 NMAC (NESHAP), and 20.2.82 NMAC (MACT).

B103 <u>Annual Fee</u>

A. The Department will assess an annual fee for this Facility. The regulation 20.2.75 NMAC set the fee amount at $1,500 through 2004 and requires it to be adjusted annually for the Consumer Price Index on January 1. The current fee amount is available by contacting the Department or can be found on the Department's website. The AQB will invoice the permittee for the annual fee amount at the beginning of each calendar year. This fee does not apply to sources which are assessed an annual fee in accordance with 20.2.71 NMAC. For sources that satisfy the definition of "small business" in 20.2.75.7.F NMAC, this annual fee will be divided by two. (20.2.75.11 NMAC)

B. All fees shall be remitted in the form of a corporate check, certified check, or money order made payable to the "NM Environment Department, AQB" mailed to the address shown on the invoice and shall be accompanied by the remittance slip attached to the invoice.

Comment [n73]: Please update to: **R7**

B104 Appeal Procedures

A. Any person who participated in a permitting action before the Department and who is adversely affected by such permitting action, may file a petition for hearing before the Environmental Improvement Board. The petition shall be made in writing to the Environmental Improvement Board within thirty (30) days from the date notice is given of the Department's action and shall specify the portions of the permitting action to which the petitioner objects, certify that a copy of the petition has been mailed or hand-delivered and attach a copy of the permitting action for which review is sought. Unless a timely request for hearing is made, the decision of the Department shall be final. The petition shall be copied simultaneously to the Department upon receipt of the appeal notice. If the petitioner is not the applicant or permittee, the petitioner shall mail or hand-deliver a copy of the petition to the applicant or permittee. The Department shall certify the administrative record to the board. Petitions for a hearing shall be sent to: (20.2.72.207.F NMAC)

Secretary, New Mexico Environmental Improvement Board
1190 St. Francis Drive, ~~Runnels Bldg. Rm. N2153~~
P.O. Box 5469
Santa Fe, New Mexico ~~87502~~

Comment [n74]: Please update to: **Harold Runnels Bldg, Suite N4050**

Comment [n75]: Please update to: **87502-5469**

B105 Submittal of Reports and Certifications

A. Stack Test Protocols and Stack Test Reports shall be submitted electronically to Stacktest.AQB@state.nm.us.

B. Excess Emission Reports shall be submitted electronically to eereports.aqb@state.nm.us. (20.2.7.110 NMAC)

C. Regularly scheduled reports shall be submitted to:

Manager, Compliance and Enforcement Section
New Mexico Environment Department
Air Quality Bureau
~~1301 Siler Road, Building B~~
Santa Fe, New Mexico 87507-~~3113~~

Comment [n76]: Please update to: **525 Camino de los Marquez, Suite 1**

Comment [n77]: Please update to: **1816**

B106 NSPS and/or MACT Startup, Shutdown, and Malfunction Operations

A. If a facility is subject to a NSPS standard in 40 CFR 60, each owner or operator that installs and operates a continuous monitoring device required by a NSPS regulation shall comply with the excess emissions reporting requirements in accordance with 40 CFR 60.7(c), unless specifically exempted in the applicable subpart.

Comment [n78]: Please update to: **R7**

B. If a facility is subject to a NSPS standard in 40 CFR 60, then in accordance with 40 CFR 60.8(c), emissions in excess of the level of the applicable emission limit during periods of startup, shutdown, and malfunction shall not be considered a violation of the applicable emission limit unless otherwise specified in the applicable standard.

C. If a facility is subject to a MACT standard in 40 CFR 63, then the facility is subject to the requirement for a Startup, Shutdown and Malfunction Plan (SSM) under 40 CFR 63.6(e)(3), unless specifically exempted in the applicable subpart.

B107 <u>Startup, Shutdown, and Maintenance Operations</u>

A. The permittee shall operate in accordance with the procedures set forth in the plan to minimize emissions during routine or predictable start up, shut down, and scheduled maintenance (SSM work practice plan), except for operations or equipment subject to Section B106 above. (20.2.7.14.A NMAC)

B108 <u>General Monitoring Requirements</u>

A. These requirements do not supersede or relax requirements of federal regulations.

B. The following monitoring requirements shall be used to determine compliance with applicable requirements and emission limits. Any sampling, whether by portable analyzer or EPA reference method, that measures an emission rate over the applicable averaging period greater than an emission limit in this permit constitutes noncompliance with this permit. The Department may require, at its discretion, additional tests pursuant to EPA Reference Methods at any time, including when sampling by portable analyzer measures an emission rate greater than an emission limit in this permit; but such requirement shall not be construed as a determination that the sampling by portable analyzer does not establish noncompliance with this permit and shall not stay enforcement of such noncompliance based on the sampling by portable analyzer.

C. If the emission unit is shutdown at the time when periodic monitoring is due to be accomplished, the permittee is not required to restart the unit for the sole purpose of performing the monitoring. Using electronic or written mail, the permittee shall notify the Department's Compliance and Enforcement Section of a delay in emission tests prior to the deadline for accomplishing the tests. Upon recommencing operation, the permittee shall submit any pertinent pre-test notification requirements set forth in the current version of the Department's Standard Operating Procedures For Use Of Portable Analyzers in Performance Test, and shall accomplish the monitoring.

D. The requirement for monitoring during any monitoring period is based on the percentage of time that the unit has operated. However, to invoke monitoring exemptions at B108.D(2), hours of operation shall be monitored and recorded.

Comment [n79]: Please update to: **R7**

(1) If the emission unit has operated for more than 25% of a monitoring period, then the permittee shall conduct monitoring during that period.

(2) If the emission unit has operated for 25% or less of a monitoring period then the monitoring is not required. After two successive periods without monitoring, the permittee shall conduct monitoring during the next period regardless of the time operated during that period, except that for any monitoring period in which a unit has operated for less than 10% of the monitoring period, the period will not be considered as one of the two successive periods.

(3) A minimum of one of each type of monitoring activity shall be conducted during any five-year period for sources not subject to 20.2.70 NMAC, Operating Permits.

E. For all periodic monitoring events, except when a federal or state regulation is more stringent, three test runs shall be conducted at 90% or greater of the unit's capacity as stated in this permit, or in the permit application if not in the permit, and at additional loads when requested by the Department. If the 90% capacity cannot be achieved, the monitoring will be conducted at the maximum achievable load under prevailing operating conditions except when a federal or state regulation requires more restrictive test conditions. The load and the parameters used to calculate it shall be recorded to document operating conditions and shall be included with the monitoring report.

F. When requested by the Department, the permittee shall provide schedules of testing and monitoring activities. Compliance tests from previous NSR and Title V permits may be re-imposed if it is deemed necessary by the Department to determine whether the source is in compliance with applicable regulations or permit conditions.

G. If monitoring is new or is in addition to monitoring imposed by an existing applicable requirement, it shall become effective 120 days after the date of permit issuance. For emission units that have not commenced operation, the associated new or additional monitoring shall not apply until 120 days after the units commence operation. All pre-existing monitoring requirements incorporated in this permit shall continue to apply from the date of permit issuance.

B109 <u>General Recordkeeping Requirements</u>

A. The permittee shall maintain records to assure and verify compliance with the terms and conditions of this permit and any other applicable requirements that become effective after permit issuance. The minimum information to be included in these records is:

(1) equipment identification (include make, model and serial number for all tested equipment and emission controls);

(2) date(s) and time(s) of sampling or measurements;

Comment [n80]: Please update to: **R7**

(3) date(s) analyses were performed;

(4) the qualified entity that performed the analyses;

(5) analytical or test methods used;

(6) results of analyses or tests; and

(7) operating conditions existing at the time of sampling or measurement.

B. Except as provided in the Specific Conditions, records shall be maintained on-site for a minimum of two (2) years from the time of recording and shall be made available to Department personnel upon request. Records for unmanned sites may be kept at the nearest company office. Sources subject to 20.2.70 NMAC "Operating Permits" shall maintain records on-site for a minimum of five (5) years from the time of recording.

C. Malfunction emissions and routine and predictable emissions during startup, shutdown, and scheduled maintenance (SSM):

(1) The permittee shall keep records of all events subject to the plan to minimize emissions during routine or predictable SSM. (20.2.7.14.A NMAC)

(2) If the facility has allowable SSM emission limits in this permit, the permittee shall record all SSM events, including the date, the start time, the end time, and a description of the event. This record also shall include a copy of the manufacturer's, or equivalent, documentation showing that any maintenance qualified as scheduled. Scheduled maintenance is an activity that occurs at an established frequency pursuant to a written protocol published by the manufacturer or other reliable source.

(3) If the facility has allowable malfunction emission limits in this permit, the permittee shall record all malfunction events to be applied against these limits, including the date, the start time, the end time, and a description of the event. Malfunction means any sudden, infrequent, and not reasonably preventable failure of air pollution control and monitoring equipment, process equipment, or a process to operate in a normal or usual manner which causes, or has the potential to cause, the emission limitations in an applicable standard to be exceeded. Failures that are caused in part by poor maintenance or careless operation are not malfunctions. (40 CFR 63.2)

B110 <u>General Reporting Requirements</u>

(20.2.72 NMAC Sections 210 and 212)

A. Records and reports shall be maintained on-site unless specifically required to be submitted to the Department or EPA by another condition of this permit or by a state or federal regulation. Records for unmanned sites may be kept at the nearest company office.

Comment [n81]: Please update to: **R7**

B. The permittee shall notify the Department's Compliance Reporting Section using the current Submittal Form posted to NMED's Air Quality web site under Compliance and Enforcement/Submittal Forms in writing of, or provide the Department with (20.2.72.212.A and B):

(1) the anticipated date of initial startup of each new or modified source not less than thirty (30) days prior to the date. Notification may occur prior to issuance of the permit, but actual startup shall not occur earlier than the permit issuance date;

(2) after receiving authority to construct, the equipment serial number as provided by the manufacturer or permanently affixed if shop-built and the actual date of initial startup of each new or modified source within fifteen (15) days after the startup date; and

(3) the date when each new or modified emission source reaches the maximum production rate at which it will operate within fifteen (15) days after that date.

C. The permittee shall notify the Department's Permitting Program Manager, in writing of, or provide the Department with (20.2.72.212.C and D):

(1) any change of operators or any equipment substitutions within fifteen (15) days of such change;

(2) any necessary update or correction no more than sixty (60) days after the operator knows or should have known of the condition necessitating the update or correction of the permit.

D. Results of emission tests and monitoring for each pollutant (except opacity) shall be reported in pounds per hour (unless otherwise specified) and tons per year. Opacity shall be reported in percent. The number of significant figures corresponding to the full accuracy inherent in the testing instrument or Method test used to obtain the data shall be used to calculate and report test results in accordance with 20.2.1.116.B and C NMAC. Upon request by the Department, CEMS and other tabular data shall be submitted in editable, MS Excel format.

E. The permittee shall submit reports of excess emissions in accordance with 20.2.7.110.A NMAC.

B111 <u>General Testing Requirements</u>

A. Compliance Tests

(1) Compliance test requirements from previous permits (if any) are still in effect, unless the tests have been satisfactorily completed. Compliance tests may be re-imposed if it is deemed necessary by the Department to determine whether the source is in compliance with applicable regulations or permit conditions. (20.2.72 NMAC Sections 210.C and 213)

Comment [n82]: Please update to: **R7**

(2) Compliance tests shall be conducted within sixty (60) days after the unit(s) achieve the maximum normal production rate. If the maximum normal production rate does not occur within one hundred twenty (120) days of source startup, then the tests must be conducted no later than one hundred eighty (180) days after initial startup of the source.

(3) Unless otherwise indicated by Specific Conditions or regulatory requirements, the default time period for each test run shall be at least 60 minutes and each performance test shall consist of three separate runs using the applicable test method. For the purpose of determining compliance with an applicable emission limit, the arithmetic mean of results of the three runs shall apply. In the event that a sample is accidentally lost or conditions occur in which one of the three runs must be discontinued because of forced shutdown, failure of an irreplaceable portion of the sample train, extreme meteorological conditions, or other circumstances, beyond the owner or operator's control, compliance may, upon the Department approval, be determined using the arithmetic mean of the results of the two other runs.

(4) Testing of emissions shall be conducted with the emissions unit operating at 90 to 100 percent of the maximum operating rate allowed by the permit. If it is not possible to test at that rate, the source may test at a lower operating rate, subject to the approval of the Department.

(5) Testing performed at less than 90 percent of permitted capacity will limit emission unit operation to 110 percent of the tested capacity until a new test is conducted.

(6) If conditions change such that unit operation above 110 percent of tested capacity is possible, the source must submit a protocol to the Department within 30 days of such change to conduct a new emissions test.

(7) The physical configuration of the Facility shall conform to the emissions testing requirements of 20.2.72.210.C NMAC and of 40 CFR 60.8(e), which is imposed under the authority of 20.2.72.210.C.4 NMAC.

B. EPA Reference Method Tests

(1) All compliance tests required by this permit, unless otherwise specified by Specific Conditions of this permit, shall be conducted in accordance with the requirements of CFR Title 40, Part 60, Subpart A, General Provisions, and the following EPA Reference Methods as specified by CFR Title 40, Part 60, Appendix A:

(a) Methods 1 through 4 for stack gas flowrate

(b) Method 5 for TSP

(c) Method 6C and 19 for SO_2

Comment [n83]: Please update to: **R7**

(d) Method 7E for NOX (test results shall be expressed as nitrogen dioxide (NO2) using a molecular weight of 46 lb/lb-mol in all calculations (each ppm of NO/NO2 is equivalent to 1.194 x 10-7 lb/SCF)

(e) Method 9 for opacity

(f) Method 10 for CO

(g) Method 19 may be used in lieu of Methods 1-4 for stack gas flowrate upon approval of the Department. A justification for this proposal must be provided along with a contemporaneous fuel gas analysis (preferably on the day of the test) and a recent fuel flow meter calibration certificate (within the most recent quarter).

(h) Method 7E or 20 for Turbines per 60.335 or 60.4400

(i) Method 29 for Metals

(j) Method 201A for filterable PM10 and PM2.5

(k) Method 202 for condensable PM

(l) Method 320 for organic Hazardous Air Pollutants (HAPs)

(m) Method 25A for VOC reduction efficiency

(2) Alternative test method(s) may be used if the Department approves the change

C. Portable Analyzer Requirements

(1) The permittee shall follow the SOP for Use of Portable Analyzers in Performance Tests posted to NMED's Air Quality web site under Compliance and Enforcement/Testing.

(2) A portable analyzer that is used for periodic emissions tests must meet the requirements of ASTM D 6522 – 00. However, if a facility has met a previously approved Department criterion for portable analyzers, the analyzer may be used until it is replaced.

(3) The portable emissions analyzer shall be setup and operated in accordance with the manufacturer's instructions, with the requirements of ASTM D-6522-00, or with the criterion of an analyzer previously approved by the Department.

(4) During emissions tests, pollutant, O2 concentration and fuel flow rate shall be monitored and recorded. This information shall be included with the test report furnished to the Department.

(5) Pollutant emission rate shall be calculated in accordance with 40 CFR 60, Appendix A, Method 19 utilizing fuel flow rate (scf) and fuel heating value (Btu/scf) obtained during the test.

D. Test Procedures:

Comment [n84]: Please update to: **R7**

(1) The permittee shall notify the Department's Program Manager, Compliance and Enforcement Section at least thirty (30) days before the test date and allow a representative of the Department to be present at the test.

(2) Equipment shall be tested in the "as found" condition. Equipment may not be adjusted or tuned prior to any test for the purpose of lowering emissions, and then returned to previous settings or operating conditions after the test is complete.

(3) Contents of test notifications, protocols and test reports shall conform to the format specified by the Department's Universal Test Notification, Protocol and Report Form and Instructions. Current forms and instructions are posted to NMED's Air Quality web site under Compliance and Enforcement Testing.

(4) The permittee shall provide (a) sampling ports adequate for the test methods applicable to the facility, (b) safe sampling platforms, (c) safe access to sampling platforms and (d) utilities for sampling and testing equipment. Sample ports of a size compatible with the test methods shall be located on the stack with the provisions of EPA Method 1 of 40 CFR 60, Appendix A. The stack shall be of sufficient height and diameter so that a representative test of the emissions can be performed in accordance with EPA Method 1.

(5) Where necessary to prevent cyclonic flow in the stack, flow straighteners shall be installed.

B112 <u>Compliance</u>

A. The Department shall be given the right to enter the facility at all reasonable times to verify the terms and conditions of this permit. Required records shall be organized by date and subject matter and shall at all times be readily available for inspection. The permittee, upon verbal or written request from an authorized representative of the Department who appears at the facility, shall immediately produce for inspection or copying any records required to be maintained at the facility. Upon written request at other times, the permittee shall deliver to the Department paper or electronic copies of any and all required records maintained on site or at an off-site location. Requested records shall be copied and delivered at the permittee's expense within three business days from receipt of request unless the Department allows additional time. Required records may include records required by permit and other information necessary to demonstrate compliance with terms and conditions of this permit. (NMSA 1978, Section 74-2-13)

B. A copy of the most recent permit(s) issued by the Department shall be kept at the permitted facility or (for unmanned sites) at the nearest company office and shall be made available to Department personnel for inspection upon request. (20.2.72.210.B.4 NMAC)

Comment [n85]: Please update to: **R7**

C. Emissions limits associated with the energy input of a Unit, i.e. lb/MMBtu, shall apply at all times unless stated otherwise in a Specific Condition of this permit. The averaging time for each emissions limit, including those based on energy input of a Unit (i.e. lb/MMBtu) is one (1) hour unless stated otherwise in a Specific Condition of this permit or in the applicable requirement that establishes the limit.

B113 Permit Cancellation and Revocation

A. The Department may revoke this permit if the applicant or permittee has knowingly and willfully misrepresented a material fact in the application for the permit. Revocation will be made in writing, and an administrative appeal may be taken to the Secretary of the Department within thirty (30) days. Appeals will be handled in accordance with the Department's Rules Governing Appeals From Compliance Orders.

B. The Department shall automatically cancel any permit for any source which ceases operation for five (5) years or more, or permanently. Reactivation of any source after the five (5) year period shall require a new permit. (20.2.72 NMAC)

C. The Department may cancel a permit if the construction or modification is not commenced within two (2) years from the date of issuance or if, during the construction or modification, work is suspended for a total of one (1) year. (20.2.72 NMAC)

B114 Notification to Subsequent Owners

A. The permit and conditions apply in the event of any change in control or ownership of the Facility. No permit modification is required in such case. However, in the event of any such change in control or ownership, the permittee shall notify the succeeding owner of the permit and conditions and shall notify the Department's Program Manager, Permits Section of the change in ownership within fifteen (15) days of that change. (20.2.72.212.C NMAC)

B. Any new owner or operator shall notify the Department's Program Manager, Permits Section, within thirty (30) days of assuming ownership, of the new owner's or operator's name and address. (20.2.73.200.E.3 NMAC)

B115 Asbestos Demolition

A. Before any asbestos demolition or renovation work, the permittee shall determine whether 40 CFR 61 Subpart M, National Emissions Standards for Asbestos applies. If required, the permittee shall notify the Department's Program Manager, Compliance and Enforcement Section using forms furnished by the Department.

Comment [n86]: Please update to: **R7**

B116 Short Term Engine Replacement

A. The following Alternative Operating Scenario (AOS) addresses engine breakdown or periodic maintenance and repair, which requires the use of a short term replacement engine. The following requirements do not apply to engines that are exempt per 20.2.72.202.B(3) NMAC. Changes to exempt engines must be reported in accordance with 20.2.72.202.B NMAC. A short term replacement engine may be substituted for any engine allowed by this permit for no more than 120 days in any rolling twelve month period per permitted engine. The compliance demonstrations required as part of this AOS are in addition to any other compliance demonstrations required by this permit.

(1) The permittee may temporarily replace an existing engine that is subject to the emission limits set forth in this permit with another engine regardless of manufacturer, model, and horsepower without modifying this permit. The permittee shall submit written notification to the Department within 15 days of the date of engine substitution according to condition B110.C(1).

(a) The potential emission rates of the replacement engine shall be determined using the replacement engine's manufacturer specifications and shall comply with the existing engine's permitted emission limits.

(b) The direction of the exhaust stack for the replacement engine shall be either vertical or the same direction as for the existing engine. The replacement engine's stack height and flow parameters shall be at least as effective in the dispersion of air pollutants as the modeled stack height and flow parameters for the existing permitted engine. The following equation may be used to show that the replacement engine disperses pollutants as well as the existing engine. The value calculated for the replacement engine on the right side of the equation shall be equal to or greater than the value for the existing engine on the left side of the equation. The permitting page of the Air Quality Bureau website contains a spreadsheet that performs this calculation.

Comment [n87]: Please update to: **R7**

EXISTING ENGINE REPLACEMENT ENGINE

$$\frac{[(g) \times (h1)] + [(v1)^2/2] + [(c) \times (T1)]}{q1} \leq \frac{[(g) \times (h2)] + [(v2)^2/2] + [(c) \times (T2)]}{q2}$$

Where
g = gravitational constant = 32.2 ft/sec2
h1 = existing stack height, feet
v1 = exhaust velocity, existing engine, feet per second
c = specific heat of exhaust, 0.28 BTU/lb-degree F
T1 = absolute temperature of exhaust, existing engine = degree F + 460
q1 = permitted allowable emission rate, existing engine, lbs/hour
h2 = replacement stack height, feet
v2 = exhaust velocity, replacement engine, feet per second
T2 = absolute temperature of exhaust, replacement engine = degree F + 460
q2 = manufacturer's potential emission rate, replacement engine, lbs/hour

The permittee shall keep records showing that the replacement engine is at least as effective in the dispersion of air pollutants as the existing engine.

(c) Test measurement of NOx and CO emissions from the temporary replacement engine shall be performed in accordance with Section B111 with the exception of Condition B111A(3) and B111B for EPA Reference Methods Tests or SectionB111C for portable analyzer test measurements. Compliance test(s) shall be conducted within fifteen (15) days after the unit begins operation, and records of the results shall be kept according to section B109.B. This test shall be performed even if the engine is removed prior to 15 days on site.

i. These compliance tests are not required for an engine certified under 40CFR60, subparts IIII, or JJJJ, or 40CFR63, subpart ZZZZ if the permittee demonstrates that one of these requirements causes such engine to comply with all emission limits of this permit. The permittee shall submit this demonstration to the Department within 48 hours of placing the new unit into operation. This submittal shall include documentation that the engine is certified, that the engine is within its useful life, as defined and specified in the applicable requirement, and shall include calculations showing that the applicable emissions standards result in compliance with the permit limits.

ii. These compliance tests are not required if a test was conducted by portable analyzer or by EPA Method test (including any required by 40CFR60, subparts IIII and JJJJ and 40CFR63, subpart ZZZZ) within the last 12 months. These previous tests are valid only if conducted at the same or lower elevation as the existing engine location prior to commencing operation as a temporary replacement. A copy of the test results shall be kept according to section B109.B.

Comment [n88]: Please update to: **R7**

(d) Compliance tests for NOx and CO shall be conducted if requested by the Department in writing to determine whether the replacement engine is in compliance with applicable regulations or permit conditions.

(e) Upon determining that emissions data developed according to B116.A.1(c) fail to indicate compliance with either the NOx or CO emission limits, the permittee shall notify the Department within 48 hours. Also within that time, the permittee shall implement one of the following corrective actions:

i. The engine shall be adjusted to reduce NOx and CO emissions and tested per B116.A.1(c) to demonstrate compliance with permit limits.

ii. The engine shall discontinue operation or be replaced with a different unit.

(2) Short term replacement engines, whether of the same manufacturer, model, and horsepower, or of a different manufacturer, model, or horsepower, are subject to all federal and state applicable requirements, regardless of whether they are set forth in this permit (including monitoring and recordkeeping), and shall be subject to any shield afforded by this permit.

(3) The permittee shall maintain a contemporaneous record documenting the unit number, manufacturer, model number, horsepower, emission factors, emission test results, and serial number of any existing engine that is replaced, and the replacement engine. Additionally, the record shall document the replacement duration in days, and the beginning and end dates of the short term engine replacement.

(4) The permittee shall maintain records of a regulatory applicability determination for each replacement engine (including 40CFR60, subparts IIII and JJJJ and 40CFR63, subpart ZZZZ) and shall comply with all associated regulatory requirements.

B. Additional requirements for replacement of engines at sources that are major as defined in regulation 20.2.74 NMAC, Permits – Prevention of Significant Deterioration, section 7.AF. For sources that are major under PSD, the total cumulative operating hours of the replacement engine shall be limited using the following procedure:

Comment [n89]: Please update to: **R7**

(1) Daily, the actual emissions from the replacement engine of each pollutant regulated by this permit for the existing engine shall be calculated and recorded.

(2) The sum of the total actual emissions since the commencement of operation of the replacement engine shall not exceed the significant emission rates in Table 2 of 20.2.74 NMAC, section 502 for the time that the replacement engine is located at the facility.

C. All records required by this section shall be kept according to section B109.

PART C MISCELLANEOUS

C100 Supporting On-Line Documents

A. Copies of the following documents can be downloaded from NMED's web site under Compliance and Enforcement or requested from the Bureau.

(1) Excess Emission Form (for reporting deviations and emergencies)

(2) Universal Stack Test Notification, Protocol and Report Form and Instructions

(3) SOP for Use of Portable Analyzers in Performance Tests

C101 Definitions

A. "**Daylight**" is defined as the time period between sunrise and sunset, as defined by the Astronomical Applications Department of the U.S. Naval Observatory. (Data for one day or a table of sunrise/sunset for an entire year can be obtained at http://aa.usno.navy.mil/. Alternatively, these times can be obtained from a Farmer's Almanac or from http://www.almanac.com/rise/).

B. "**Exempt Sources**" and "**Exempt Activities**" is defined as those sources or activities that are exempted in accordance with 20.2.72.202 NMAC. Note; exemptions are only valid for most 20.2.72 NMAC permitting actions.

C. "**Fugitive Emission**" means those emissions which could not reasonably pass through a stack, chimney, vent, or other functionally equivalent opening.

D. "**Insignificant Activities**" means those activities which have been listed by the department and approved by the administrator as insignificant on the basis of size, emissions or production rate. Note; insignificant activities are only valid for 20.2.70 NMAC permitting actions.

E. "**Natural Gas**" is defined as a naturally occurring fluid mixture of hydrocarbons that contains 20.0 grains or less of total sulfur per 100 standard cubic feet (SCF) and is either composed of at least 70% methane by volume or has a gross calorific value of between 950 and 1100 Btu per standard cubic foot. (40 CFR 60.631)

Comment [n90]: Please update to: **R7**

F. "**Natural Gas Liquids**" means the hydrocarbons, such as ethane, propane, butane, and pentane, that are extracted from field gas. (40 CFR 60.631)

G. "**National Ambient air Quality Standards**" means, unless otherwise modified, the primary (health-related) and secondary (welfare-based) federal ambient air quality standards promulgated by the US EPA pursuant to Section 109 of the Federal Act.

H. "**Night**" is the time period between sunset and sunrise, as defined by the Astronomical Applications Department of the U.S. Naval Observatory. (Data for one day or a table of sunrise/sunset for an entire year can be obtained at http://aa.usno.navy.mil/. Alternatively, these times can be obtained from a Farmer's Almanac or from http://www.almanac.com/rise/).

I. "**Night Operation or Operation at Night**" is operating a source of emissions at night.

J. "**NO_2**" or "**Nitrogen dioxide**" means the chemical compound containing one atom of nitrogen and two atoms of oxygen, for the purposes of ambient determinations. The term "nitrogen dioxide," for the purposes of stack emissions monitoring, shall include nitrogen dioxide (the chemical compound containing one atom of nitrogen and two atoms of oxygen), nitric oxide (the chemical compound containing one atom of nitrogen and one atom of oxygen), and other oxides of nitrogen which may test as nitrogen dioxide and is sometimes referred to as NOx or NOx. (20.2.2 NMAC)

K. "**NOx**" see NO_2

L. "**Potential Emission Rate**" means the emission rate of a source at its maximum capacity to emit a regulated air contaminant under its physical and operational design, provided any physical or operational limitation on the capacity of the source to emit a regulated air contaminant, including air pollution control equipment and restrictions on hours of operation or on the type or amount of material combusted, stored or processed, shall be treated as part of its physical and operational design only if the limitation or the effect it would have on emissions is enforceable by the department pursuant to the Air Quality Control Act or the federal Act.

M. "**Restricted Area**" is an area to which public entry is effectively precluded. Effective barriers include continuous fencing, continuous walls, or other continuous barriers approved by the Department, such as rugged physical terrain with a steep grade that would require special equipment to traverse. If a large property is completely enclosed by fencing, a restricted area within the property may be identified with signage only. Public roads cannot be part of a Restricted Area.

Comment [n91]: Please update to: **R7**

N. "**Shutdown**", for requirements under 20.2.72 NMAC, means the cessation of operation of any air pollution control equipment, process equipment or process for any purpose, except routine phasing out of batch process units.

O. "**SSM**", for requirements under 20.2.7 NMAC, means routine or predictable startup, shutdown, or scheduled maintenance.

(1) "**Shutdown**", for requirements under 20.2.7 NMAC, means the cessation of operation of any air pollution control equipment or process equipment.

(2) "**Startup**", for requirements under 20.2.7 NMAC, means the setting into operation of any air pollution control equipment or process equipment.

P. "**Startup**", for requirements under 20.2.72 NMAC, means the setting into operation of any air pollution control equipment, process equipment or process for any purpose, except routine phasing in of batch process units.

C102 <u>Acronyms</u>

2SLB ..... 2-stroke lean burn
4SLB ..... 4-stroke lean burn
4SRB.....4-stroke rich burn
acfm..... actual cubic feet per minute
AFR.....air fuel ratio
AP-42 .....EPA Air Pollutant Emission Factors
AQB.....Air Quality Bureau
AQCR ..... Air Quality Control Region
ASTM.....American Society for Testing and Materials
BTU.....British Thermal Unit
CAA.....Clean Air Act of 1970 and 1990 Amendments
CEM..... continuous emissions monitoring
cfh ..... cubic feet per hour
cfm .....cubic feet per minute
CFR..... Code of Federal Regulation
CI .....compression ignition
CO..... carbon monoxides
COMS ..... continuous opacity monitoring system
EIB ..... Environmental Improvement Board
EPA..... United States Environmental Protection Agency
gr./100 cf ..... grains per one hundred cubic feet
gr./dscf .....grains per dry standard cubic foot
GRI.....Gas Research Institute
HAP.....hazardous air pollutant
hp .....horsepower
H_2S.....hydrogen sulfide

Comment [n92]: Please update to: **R7**

IC .....internal combustion
KW/hr ..... kilowatts per hour
lb/hr.....pounds per hour
lb/MMBtu .....pounds per million British Thermal Unit
MACT .....Maximum Achievable Control Technology
MMcf/hr.....million cubic feet per hour
MMscf.....million standard cubic feet
N/A.....not applicable
NAAQS.....National Ambient Air Quality Standards
NESHAP .....National Emission Standards for Hazardous Air Pollutants
NG ..... natural gas
NGL ..... natural gas liquids
NMAAQS .....New Mexico Ambient Air Quality Standards
NMAC..... New Mexico Administrative Code
NMED..... New Mexico Environment Department
NMSA.....New Mexico Statues Annotated
NOx.....nitrogen oxides
NSCR.....non-selective catalytic reduction
NSPS.....New Source Performance Standard
NSR.....New Source Review
PEM .....parametric emissions monitoring
PM..... particulate matter (equivalent to TSP, total suspended particulate)
PM10 .....particulate matter 10 microns and less in diameter
PM2.5 .....particulate matter 2.5 microns and less in diameter
pph.....pounds per hour
ppmv ..... parts per million by volume
PSD .....Prevention of Significant Deterioration
RATA.....Relative Accuracy Test Assessment
RICE .....reciprocating internal combustion engine
rpm..... revolutions per minute
scfm..... standard cubic feet per minute
SI ..... spark ignition
SO2 ..... sulfur dioxide
SSM.....Startup Shutdown Maintenance (see SSM definition)
TAP..... Toxic Air Pollutant
TBD.....to be determined
THC.....total hydrocarbons
TSP.....Total Suspended Particulates
tpy .....tons per year
ULSD.....ultra low sulfur diesel
USEPA..... United States Environmental Protection Agency
UTM.....Universal Transverse Mercator Coordinate system
UTMH.....Universal Transverse Mercator Horizontal
UTMV.....Universal Transverse Mercator Vertical

Comment [n93]: Please update to: **R7**

VHAP.....volatile hazardous air pollutant
VOC..... volatile organic compounds

Section 4
Process Flow Sheet

A **process flow sheet** and/or block diagram indicating the individual equipment, all emission points and types of control applied to those points. The unit numbering system should be consistent throughout this application.

A process flow diagram is attached.

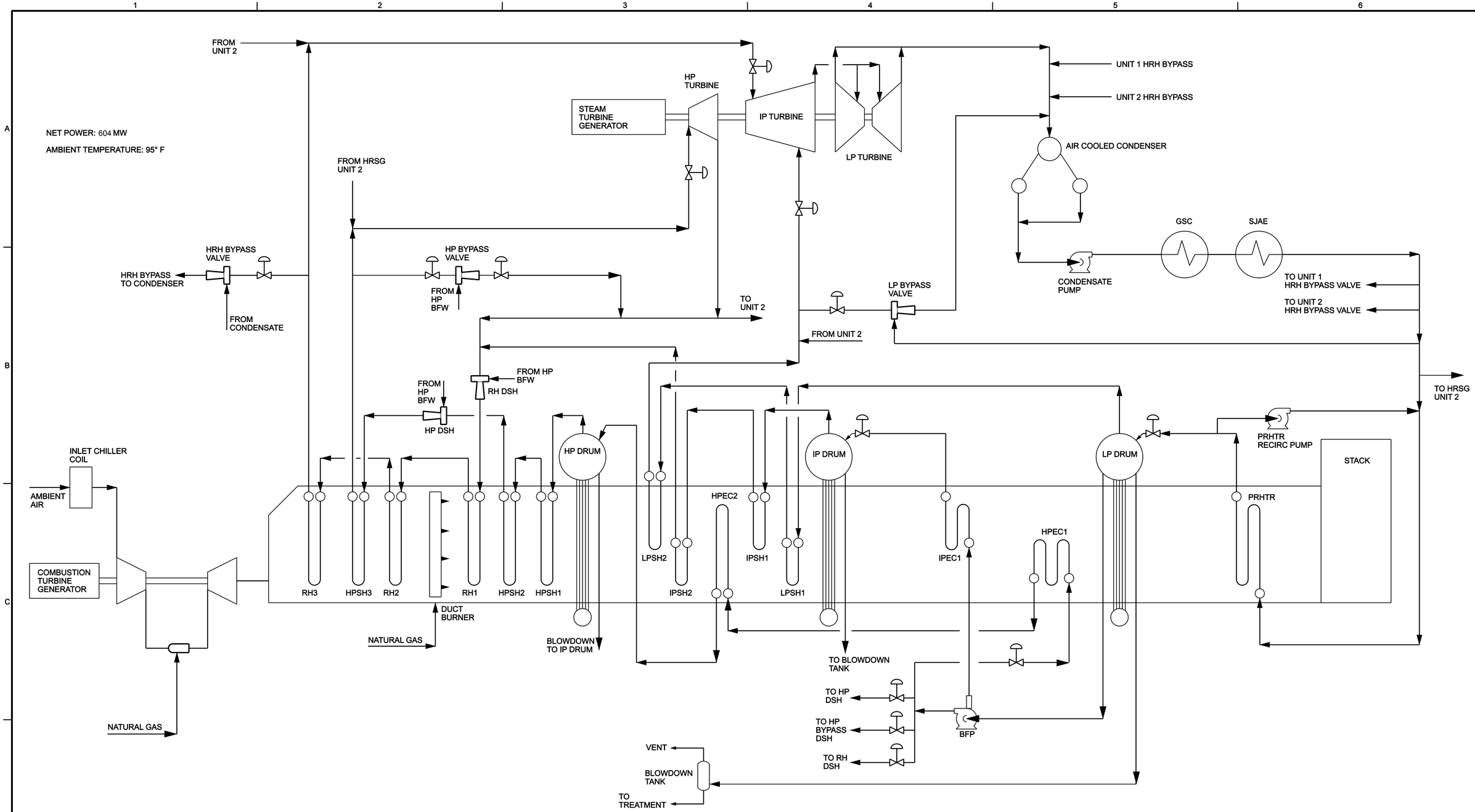

NO.	DATE	REVISION	BY	CHK
P1	09/07/06	ISSUED FOR PRELIMINARY DESIGN	EFC	BR
A	09/21/06	ISSUED FOR REVIEW	EFC	BR

REVISION APPROVAL		REV A	DATE 09/21/06
DISCIPLINE	REVIEWED	DISCIPLINE	REVIEWED
CIVIL		ELECTRICAL	
STRUCTURAL		INST & CONTROL	
MECHANICAL		ARCHITECTURAL	
PROCESS		ENVIRONMENTAL	
PIPING		GEN. ARRANG.	

STATUS					
ISSUED	REV	DATE	DM	SDE	PEM
PRELIMINARY	P1	09/07/06	RP	BR	AW
FOR REVIEW AND APPROVAL	A				
APPROVED FOR CONSTRUCTION					
REVISED & APPROVED FOR CONSTRUCTION					

SCALE NONE

RESPONSIBLE ENGINEER

PE#

SPS-EXCEL
Colorado Energy Management
HOBBS POWER STATION
Hobbs, NM

PROJECT NO. 349552

LG Constructors

PROCESS FLOW DIAGRAM

HEAT BALANCE SHEET 1
2 x 1 MHI 501 F

DWG. NO. HB-PR-10-10-01

REV. A

BAR IS ONE INCH ON ORIGINAL DRAWING.
0 1"

FILENAME: hbpr101001.dlv PLOT DATE: 21-SEP-2006 PLOT TIME:

REUSE OF DOCUMENTS: THIS DOCUMENT, AND THE IDEAS AND DESIGNS INCORPORATED HEREIN, AS AN INSTRUMENT OF PROFESSIONAL SERVICE, IS THE PROPERTY OF CH2M HILL AND IS NOT TO BE USED, IN WHOLE OR IN PART, FOR ANY OTHER PROJECT WITHOUT THE WRITTEN AUTHORIZATION OF CH2MHILL.
© CH2M HILL

Section 5
Plot Plan Drawn To Scale

A **plot plan drawn to scale** showing emissions points, roads, structures, tanks, and fences of property owned, leased, or under direct control of the applicant. This plot plan must clearly designate the restricted area as defined in UA1, Section 1-D.12. The unit numbering system should be consistent throughout this application.

A Plot Plan drawn to scale is attached.

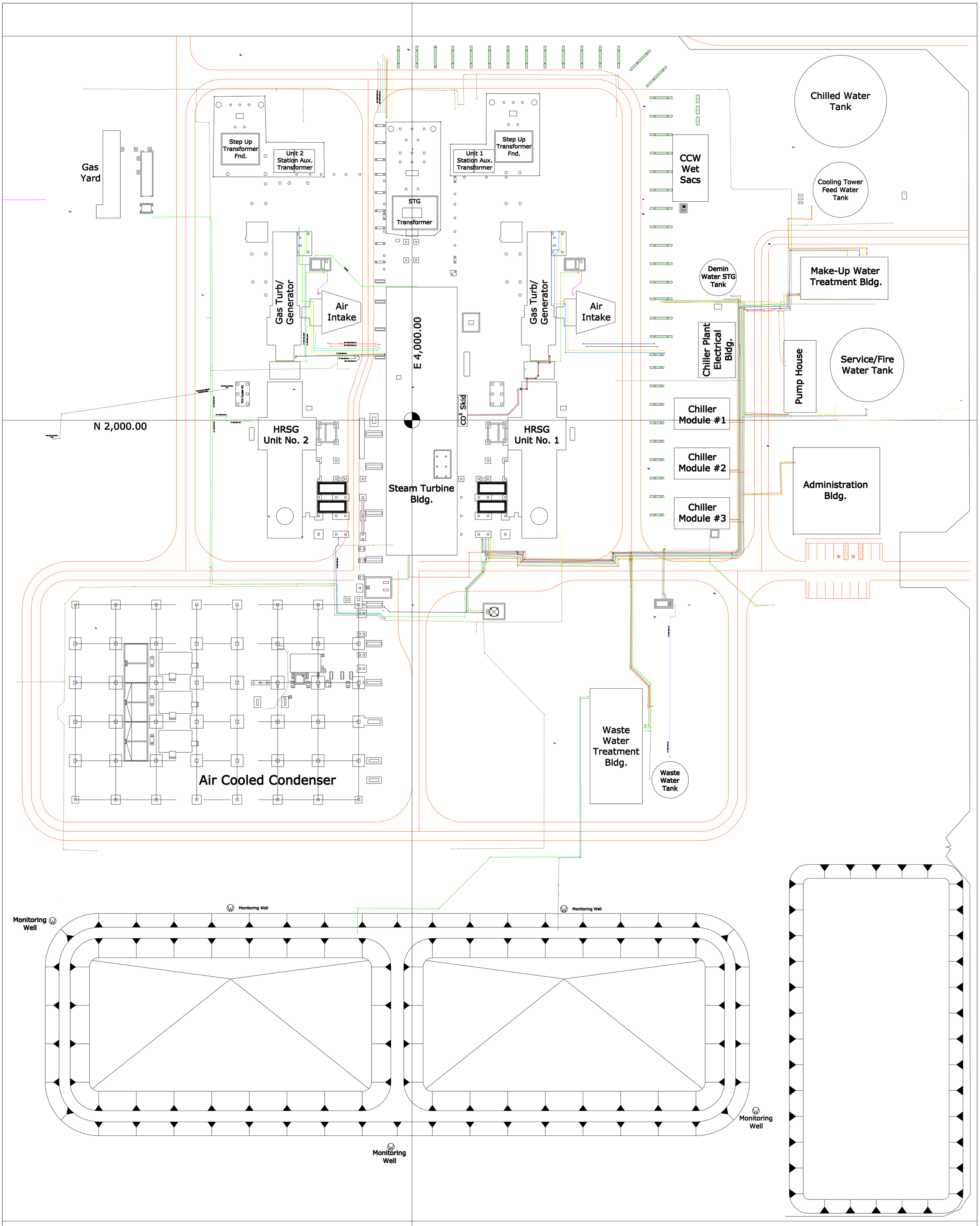

Hobbs Generating Station
Underground Pipe Asbuilt
Field: LPR Survey Group
Drawing: Josh Truxall / Date:6-16-08

Section 6
All Calculations

Show all calculations used to determine both the hourly and annual controlled and uncontrolled emission rates. All calculations shall be performed keeping a minimum of three significant figures. Document the source of each emission factor used (if an emission rate is carried forward and not revised, then a statement to that effect is required). If identical units are being permitted and will be subject to the same operating conditions, submit calculations for only one unit and a note specifying what other units to which the calculations apply. All formulas and calculations used to calculate emissions must be submitted. The "Calculations" tab in the UA2 has been provided to allow calculations to be linked to the emissions tables. Add additional "Calc" tabs as needed. If the UA2 or other spread sheets are used, all calculation spread sheet(s) shall be submitted electronically in Microsoft Excel compatible format so that formulas and input values can be checked. Format all spread sheets and calculations such that the reviewer can follow the logic and verify the input values. Define all variables. If calculation spread sheets are not used, provide the original formulas with defined variables. Additionally, provide subsequent formulas showing the input values for each variable in the formula. All calculations, including those calculations are imbedded in the Calc tab of the UA2 portion of the application, the printed Calc tab(s), should be submitted under this section.

Tank Flashing Calculations: The information provided to the AQB shall include a discussion of the method used to estimate tank-flashing emissions, relative thresholds (i.e., NOI, permit, or major source (NSPS, PSD or Title V)), accuracy of the model, the input and output from simulation models and software, all calculations, documentation of any assumptions used, descriptions of sampling methods and conditions, copies of any lab sample analysis. If Hysis is used, all relevant input parameters shall be reported, including separator pressure, gas throughput, and all other relevant parameters necessary for flashing calculation.

SSM Calculations: It is the applicant's responsibility to provide an estimate of SSM emissions or to provide justification for not doing so. In this Section, provide emissions calculations for Startup, Shutdown, and Routine Maintenance (SSM) emissions listed in the Section 2 SSM and/or Section 22 GHG Tables and the rational for why the others are reported as zero (or left blank in the SSM/GHG Tables). Refer to "Guidance for Submittal of Startup, Shutdown, Maintenance Emissions in Permit Applications (http://www.nmenv.state.nm.us/aqb/permit/app_form.html) for more detailed instructions on calculating SSM emissions. If SSM emissions are greater than those reported in the Section 2, Requested Allowables Table, modeling may be required to ensure compliance with the standards whether the application is NSR or Title V. Refer to the Modeling Section of this application for more guidance on modeling requirements.

Glycol Dehydrator Calculations: The information provided to the AQB shall include the manufacturer's maximum design recirculation rate for the glycol pump. If GRI-Glycalc is used, the full input summary report shall be included as well as a copy of the gas analysis that was used.

Road Calculations: Calculate fugitive particulate emissions and enter haul road fugitives in Tables 2-A, 2-D and 2-E for:

1. If you transport raw material, process material and/or product into or out of or within the facility and have PER emissions greater than 0.5 tpy.
2. If you transport raw material, process material and/or product into or out of the facility more frequently than one round trip per day.

Significant Figures:

A. All emissions standards are deemed to have at least two significant figures, but not more than three significant figures.

B. At least 5 significant figures shall be retained in all intermediate calculations.

C. In calculating emissions to determine compliance with an emission standard, the following rounding off procedures shall be used:

(1) If the first digit to be discarded is less than the number 5, the last digit retained shall not be changed;

(2) If the first digit discarded is greater than the number 5, or if it is the number 5 followed by at least one digit other than the number zero, the last figure retained shall be increased by one unit; **and**

(3) If the first digit discarded is exactly the number 5, followed only by zeros, the last digit retained shall be rounded upward if it is an odd number, but no adjustment shall be made if it is an even number.

(4) The final result of the calculation shall be expressed in the units of the standard.

Control Devices: In accordance with 20.2.72.203.A(3) and (8) NMAC, 20.2.70.300.D(5)(b) and (e) NMAC, and 20.2.73.200.B(7) NMAC, the permittee shall report all control devices and list each pollutant controlled by the control device regardless if the applicant takes credit for the reduction in emissions. The applicant can indicate in this section of the application if they chose to not take credit for the reduction in emission rates. For notices of intent submitted under 20.2.73 NMAC, only uncontrolled emission rates can be considered to determine applicability unless the state or federal Acts require the control. This information is necessary to determine if federally enforceable conditions are necessary for the control device, and/or if the control device produces its own regulated pollutants or increases emission rates of other pollutants.

As detailed in **Section 3**, the proposed CTG performance upgrade will result in the need for less cooling air and will have a corresponding increase in fuel consumption, exhaust flow rate, temperature, electricity production, and mass emission rates. Stack exhaust pollutant concentrations will continue to be controlled at the currently authorized limits as summarized in **Table 6–1**.

Table 6–1 Stack Exhaust Controls

Air Pollutant	Stack Exhaust Concentration	Averaging Period	Control Method
NOx	2 ppmvdc	24-hour average	SCR with aqueous NH_3
CO	2 ppmvdc	1-hour average	Oxidation Catalyst
VOC	1 ppmvdc	24-hour average	Oxidation Catalyst
SO_2	Exclusively fire pipeline natural gas in CTGs and HRSG duct burners.		
$PM_{10}/PM_{2.5}$			

Although NO_X, CO and VOC concentrations from the turbine exhaust will remain constant, there will be an increase in actual mass emission rates of these pollutants due to the increased exhaust flow rate. Increases in SO_2, PM_{10} and $PM_{2.5}$, are expected due to the increased fuel consumption.

Combustion emissions associated with the CTGs and the HRSG duct burners include NOx, CO, VOC, SO_2, $PM_{10}/PM_{2.5}$, Greenhouse Gases (GHG), and hazardous air pollutants (HAPs). There may also be ammonia slip from the SCR systems. Emission rate estimates for the CTG/HRSG train stacks are based on vendor estimated data, fuel analysis data, and regulatory requirements. The natural gas heating value was calculated based on the latest 2013 natural gas analysis completed at Hobbs, as 932 Btu/scf (LHV) and 1,033 Btu/scf (HHV).

Since pollutant emission rates may vary depending on ambient conditions, the following operating scenarios were considered for estimating the maximum hourly emission rates:

- Winter reference: 30 ºF, 20% ambient relative humidity, chillers off
- Summer reference: 95 ºF, 95% ambient relative humidity, chillers on
- Summer reference: 95 ºF, 20% ambient relative humidity, chillers off

Detailed emission rate calculations are provided in the following pages. For each pollutant, the total emission rate out the stack considers the combined flow from the CTG exhaust and the duct burner exhaust, controlled by the SCR and the oxidation catalyst. The proposed hourly emission rate limit for each pollutant is based on the ambient conditions which result in the maximum hourly emission rate.

Annual emission rates are estimated assuming continuous annual operation (8,760 hours per year per unit) as well as cases with maximum annual startups and shutdowns (8,290 hours per year of routine operation and 470 hours per year of [illegible]wns). The proposed annual emission rate limit for each pollutant is based on the maximum of these

scenarios, which collectively allow the operational flexibility necessary for the plant to respond to market demands and meet its existing contractual requirements.

The proposed performance upgrade is not expected to affect part load emission rates, as the IGV bracket will be modified to adjust the air flow rate at startup, providing a wider range of IGV movement from -4, +34 degrees to -4, +37.5 degrees.

The startup and shutdown emission rates for NOx, CO and VOC are based on the projected amount of time needed, the annual frequency of the event and vendor supplied data on CTG performance at reduced loads. CTG startups and shutdowns are expected to occur for a maximum of 470 hours per year per turbine. The duration of the startups will be minimized to the best extent possible for each unit. It is expected that the turbines will have the following typical event durations:

- Cold Startup: 60 events per year at 180 minutes per event;
- Warm Startup: 70 events per year at 120 minutes per event;
- Hot Startup: 50 events per year at 90 minutes per event; and
- Shutdowns: 180 events per year at 25 minutes per event.

The number and/or duration of planned startup and shutdown events represented above are provided solely for the purpose of estimating maximum mass emission rates. This specific number of events and event durations are not to be construed as binding. Rather, Hobbs will demonstrate compliance by meeting the stated short and long term mass emission rates and concentration limits.

Note that all other emissions are carried forward from previous permit applications a mentioned in **Section 3**. Auxiliary equipment onsite will not be affected by the proposed performance upgrade at the CTGs.

Updates from Previous Representations

During the process of reviewing the prior permit application representations of Hobbs emission rates, some inconsistencies were identified. Accordingly, for the proposed CTG upgrade representations, the associated methodological approaches were corrected to more accurately represent the facility operations. These include:

- Prior permit application representations incorporated an error in the exhaust concentration calculation, as the moisture content of the exhaust gases had not been correctly accounted for in the exhaust concentration at actual temperature and moisture conditions. Updated calculations have been corrected and show an overall reduction on the maximum hourly emission rate compared to the original representation. This reduction is, however, compensated with the increase in emissions due to the proposed upgrade. Consequently, the final requested allowable emission rates (as represented in **Table 2-E** of the **UA2 Form**), remain practically unchanged.
- Prior permit application representations incorrectly calculated VOC mass emission rates based on an exhaust concentration below the vendor guaranteed and authorized limit of 1 ppmvdc. Updated calculations have been corrected to this higher exhaust concentration. Hobbs therefore requests the correction of the VOC mass emission rates represented in the PSD 3449-R6 and P244-M4 permit authorizations.
- Prior permit applications estimated SO_2 mass emission rates based on a fuel gas hydrogen sulfide content of 2 grains of per 100 standard cubic feet (2 grains-H_2S/100scf). To be consistent with 40 CFR Part 75 calculation methodologies, Hobbs proposes to update the SO_2 mass emission rate representation to be based on the total sulfur content of the fuel gas instead of the H_2S content. Hobbs exclusively fires pipeline quality natural gas and conducts annual sampling and analysis to demonstrate compliance with 40 CFR Part 75 SO_2 default emission factor (0.0006 lb/MMBtu, which corresponds to approximately 0.2 grains-S/100scf). Consequently, Hobbs is to update the SO_2 mass emission representation to be based on average annual fuel sulfur content.

Compliance will continue to be demonstrated by annual sampling and analysis of the sulfur gas as required by 40 CFR Part 75, Appendix D Section 2.3.1.

- Prior permit application representations included estimated CTGs startup and shutdown emission rates based on a total of 300 hot startups and accounting for a certain level of emission control by the SCR and oxidation catalyst during startup of the CTGs. However, the SCR and the oxidation catalyst do not operate at full efficiency until the units have reached certain temperature requirements, which nominally occur when the unit is operating at approximately 70% load. Therefore, although according to vendor data, the CTGs upgrade will not result in an increase in emission rates associated with the units startup and shutdown events, Hobbs is requesting an update to the startup and shutdown representations, to more accurately account for the emission levels at each load during the ramping curve of startup and/or shutdown. In addition, Hobbs is requesting an update to the permit language so that it is clear that all types of startups are authorized (e.g., cold, warm and hot startups). Additionally, Hobbs requests that the number and duration of planned startup and shutdown events used specifically to estimate the worst case emissions scenarios not be construed as binding limits since there are numerous potential combinations of startup types that could be required during an operational year. Instead, Hobbs is requesting that the permit compliance should be based solely upon meeting the proposed emission rate limits represented on **Table 2-E** (**UA2 Form**).

Emission Rate Calculations

The following pages include:

- Emission Rate Summary
- 100% Load CTG Hourly
- 100% Load CTG Annual (8,760 hr/yr of routine operation)
- 100% Load CTG Annual (8,290 hours per year of routine operation and 470 hours per year of SSM)
- Reduced Load CTG Hourly
- CTG SSM Events
- CTG Speciated HAPs
- Fuel Analysis
- Mitsubishi Performance Data

These calculations are also provided in UA2 Form.

HOBBS EMISSION RATE SUMMARY

Post-Project Emission Rates

Air Pollutant	CT w/o Duct Burner (lb/hr) (1)	CT w/Duct Burner (lb/hr) (2)	CT w/o Duct Burner	CT w/Duct Burner	CTG Startup & Shutdown (3)	Annual Combined (tpy) (4)
NOx	14.5	18.1	0.43	lb/MWh(5)	96 ppmvd @ 15% O2	185.6
CO	8.8	11.0			3,000 ppmvd @ 15% O2	311.6
VOC	2.4	2.8			900 ppmvd @ 15% O2	97.2
SO_2	8.4	10.7	0.06	lb/MMBtu(6)	-	80.6
$PM_{10}/PM_{2.5}$	11.3	17.1	0.007 lb/MMBtu	0.008 lb/MMBtu	-	120.4
NH_3		32.1			-	281.3
CO_2	-	-			-	1,891,120
N_2O	-	-			-	3.5
CH_4	-	-			-	35.1
GHG	-	-			-	1,891,159
CO_2e	-	-			-	1,893,043

Notes:

(1) Proposed post-project maximum hourly mass emission rates without duct firing. Emission rates in blue font remain at same levels as currently authorized.

(2) Proposed post-project maximum hourly mass emission rates with supplemental duct firing. Emission rates in blue font remain at same levels as currently authorized.

(3) Proposed project CTG startup and shutdown emission rates per unit, includes 20% safety factor over manufacturer data.

(4) Annual Combined emissions for the two units combined. Represents the maximum emission rate for an operation at 100% laod for 8,760 hr/yr or and operation at 100% load for 8,290 hr/yr and 470 hr/yr in startup & shutdown mode.

Annual Combined NOx = MAX [(31.2 tpy + 28.8 tpy), (28.3 tpy + 28.8 tpy + 35.7 tpy)] = MAX [60.1 tpy, 92.8] tpy * 2 units = 185.6 tpy

(5) NO_2 output base limit in accordance with Table 1 to NSPS Subpart KKKK.

(6) SO_2 input base limit in accordance with NSPS Subpart KKKK, §60.4330.

Estimated Post-Project Emission Rates Summary per Unit

Air Pollutant	Status	CTG w/o Duct Burner (1)				CTG w/Duct Burner (2)				CTG Startup & Shutdown (3)		
		ppmvd @ 15% O_2	Max. Hourly (lb/hr)	Annual 100% Load 8,760 hr/yr (tpy)	Annual 100% Load 8,290 hr/yr (tpy)	ppmvd @ 15% O_2	lb/hr	Annual 100% Load 8,760 hr/yr (tpy)	Annual 100% Load 8,290 hr/yr (tpy)	ppmvd @ 15% O_2	lb/hr	tpy
NOx	pre-control	25.1	172.0	390.2	353.2	21.9	178.6	312.8	312.8	96	193	35.7
	post-control	2.0	13.7	31.2	28.3	2.0	16.3	28.8	28.8			
CO	pre-control	15.1	63.0	142.9	129.3	13.5	66.8	117.1	117.1	3,000	441	106
	post-control	2.0	8.3	19.0	17.2	2.0	9.9	17.6	17.6			
VOC	pre-control	2.0	4.8	10.9	9.8	1.8	5.2	9.1	9.1	900	78	42.6
	post-control	1.0	2.4	3.3	3.0	1.0	2.8	3.0	3.0			
SO_2	-	0.9	8.4	20.9	18.9	0.9	10.0	19.4	19.4	-	-	0.8
$PM_{10}/PM_{2.5}$	-	-	11.2	26.1	23.6	-	17.0	30.6	30.6	-	-	1.8
NH_3	-	10	25.3	57.8	52.3	10	30.2	53.4	53.4	-	-	2.2
CO_2	-	-	-	489,467	442,964		-	456,093	456,093	-	-	17,721
N_2O	-	-	-	0.9	0.8		-	0.8	0.8	-	-	0.03
CH_4	-	-	-	9.1	8.2		-	8.5	8.5	-	-	0.33
GHG	-	-	-	489,477	442,973	-	-	456,102	456,102	-	-	17,721
CO_2e	-	-	-	489,965	443,415	-	-	456,557	456,557	-	-	17,739

Notes:

(1) Proposed post-project emission rates with no duct firing per unit

(2) Proposed post-project emission rates with duct firing per unit

(3) Proposed project CTG startup and shutdown emission rates per unit

HOBBS 501F4 Hourly Emission Rate Calculation (100% Load)

		Case 4 Unfired Winter Chillers Off	Case 4 Fired Winter Chillers Off	Case 5 Unfired Summer Chillers On	Case 5 Fired Summer Chillers On	Case 6 Unfired Summer Chillers Off	Case 6 Fired Summer Chillers Off
SITE CONDITIONS							
Ambient Temperature	ºF	30	30	95	95	95	95
Ambient Relative Humidity	%	20	20	95	95	20	20
Barometric Pressure	psia	12.83	12.83	12.83	12.83	12.83	12.83
Compressor Inlet Temperature	ºF	30	30	46	46	95	95
FACILITY CONDITIONS							
GT Power Output	MW	180.3	180.3	171.7	171.7	140.8	140.8
GT Model		Hobbs 501F4	Hobbs 501F4	Hobbs 501F4	Hobbs 501F4	Hobbs 501F4	Hobbs 501F4
GT Load		Base	Base	Base	Base	Base	Base
Chillers ON/OFF		Off	Off	**On**	**On**	Off	Off
GT Fuel Flow Rate	lb/hr	82,176	82,176	79,115	79,115	67,668	67,668
GT Heat Input (LHV)	MMBtu/hr	1,697	1,697	1,633	1,633	1,397	1,397
GT Heat Input (HHV)	MMBtu/hr	1,811	1,811	1,743	1,743	1,491	1,491
GT Fuel Flow Rate	MMscf/hr	1.75	1.75	1.69	1.69	1.44	1.44
DB Model		Forney	Forney	Forney	Forney	Forney	Forney
DB Status		Off	On	Off	On	Off	On
DB Heat Input (LHV)	MMBtu/hr	-	330	-	330	-	330
DB Heat Input (HHV)	MMBtu/hr	-	366	-	366	-	366
DB Fuel Flow Rate	MMscf/hr	-	0.35	-	0.35	-	0.35
FUEL ANALYSIS							
Fuel Type		PNG	PNG	PNG	PNG	PNG	PNG
Fuel Molecular Weight	lb/lbmole	17.3	17.3	17.3	17.3	17.3	17.3
Sulfur Content	grains/100scf	1.7	1.7	1.7	1.7	1.7	1.7
Fuel Heat Content (LHV)	Btu/scf	932	932	932	932	932	932
Fuel Heat Content (HHV)	Btu/scf	1,033	1,033	1,033	1,033	1,033	1,033
HHV/LHV Ratio		1.1	1.1	1.1	1.1	1.1	1.1
GT EXHAUST GAS ANALYSIS							
Oxygen, O2	%vol	12.3	12.3	12.1	12.1	12.5	12.5
Carbon Dioxide, CO2	%vol	4.0	4.0	3.9	3.9	3.8	3.8
Water, H2O	%vol	7.9	7.9	8.8	8.8	8.6	8.6
Nitrogen, N2	%vol	74.9	74.9	74.3	74.3	74.2	74.2
Argon, Ar	%vol	0.9	0.9	0.9	0.9	0.9	0.9
Total	%vol	100.00	100.00	100.00	100.00	100.00	100.00
Molecular Weight (GT Exhaust Gases)	lb/lbmole	28.5	28.5	28.3	28.3	28.4	28.4
GT Exhaust Temperature	ºF	1,145	1,145	1,156	1,156	1,168	1,168
GT Exhaust Flow Rate	lb/hr	3,592,532	3,592,532	3,467,318	3,467,318	3,113,817	3,113,817
GT Exhaust Flow Rate	lbmole/hr	126,232	126,232	122,320	122,320	109,774	109,774
GT Exhaust Flow Rate	MMscf/hr	48.6	48.6	47.1	47.1	42.3	42.3
GT Exhaust Flow Rate	Nm3/hr	1,377,266	1,377,266	1,334,591	1,334,591	1,197,698	1,197,698
GT Exhaust Oxygen, O2	lbmole/hr	15,527	15,527	14,816	14,816	13,722	13,722
GT Exhaust Carbon Dioxide, CO2	lbmole/hr	5,049	5,049	4,775	4,775	4,171	4,171
GT Exhaust Water, H2O	lbmole/hr	9,972	9,972	10,775	10,775	9,441	9,441
GT Exhaust Nitrogen, N2	lbmole/hr	94,548	94,548	90,853	90,853	81,452	81,452
GT Exhaust Argon, Ar	lbmole/hr	1,136	1,136	1,102	1,102	988	988

HOBBS 501F4 Hourly Emission Rate Calculation (100% Load)

		Case 4 Unfired Winter Chillers Off	Case 4 Fired Winter Chillers Off	Case 5 Unfired Summer Chillers On	Case 5 Fired Summer Chillers On	Case 6 Unfired Summer Chillers Off	Case 6 Fired Summer Chillers Off
GT EMISSION RATES							
NOx	ppmvd @ 15% O2	25	25	25	25	25	25
NOx	ppmvd	32	32	32	32	31	31
NOx (as NO2)	lb/hr	172	172	165	165	141	141
CO	ppmvd @ 15% O2	15	15	15	15	15	15
CO	ppmvd	19	19	19	19	18	18
CO	lb/hr	63	63	60	60	52	52
VOC	ppmvd @ 15% O2	2.0	2.0	2.0	2.0	2.0	2.0
VOC	ppmvd	2.6	2.6	2.6	2.6	2.4	2.4
VOC (as CH4)	lb/hr	4.8	4.8	4.6	4.6	3.9	3.9
Sulfur Content	grains/100scf	1.7	1.7	1.7	1.7	1.7	1.7
SO2	lb/hr	8.4	8.4	8.0	8.0	6.9	6.9
PM10	mg/Nm3	3.70	3.70	3.70	3.70	3.70	3.70
PM10	lb/hr	11.2	11.2	10.9	10.9	9.8	9.8
Formaldehyde, HCHO	ppbvd @ 15% O2	91	91	91	91	91	91
Formaldehyde, HCHO	ppmvd	0.1	0.1	0.1	0.1	0.1	0.1
Formaldehyde, HCHO	lb/hr	0.4	0.4	0.4	0.4	0.3	0.3
DB EMISSION RATES							
NOx	lb/MMBtu (LHV)	0.02	0.02	0.02	0.02	0.02	0.02
NOx	lb/hr	-	6.6	-	6.6	-	6.6
CO	lb/MMBtu (LHV)	0.012	0.012	0.012	0.012	0.012	0.012
CO	lb/hr	-	3.8	-	3.8	-	3.8
VOC	lb/MMBtu (LHV)	0.0013	0.0013	0.0013	0.0013	0.0013	0.0013
VOC (as CH4)	lb/hr	-	0.4	-	0.4	-	0.4
Sulfur Content	grains/100scf	1.67	1.67	1.67	1.67	1.67	1.67
SO2	lb/hr	-	1.7	-	1.7	-	1.7
PM10	lb/MMBtu (LHV)	0.0175	0.0175	0.0175	0.0175	0.0175	0.0175
PM10	lb/hr	-	5.8	-	5.8	-	5.8
Formaldehyde, HCHO	lb/MMscf (HHV)	7.50E-02	7.50E-02	7.50E-02	7.50E-02	7.50E-02	7.50E-02
Formaldehyde, HCHO	lb/MMBtu (HHV)	7.35E-05	7.35E-05	7.35E-05	7.35E-05	7.35E-05	7.35E-05
Formaldehyde, HCHO	lb/hr	-	0.03	-	0.03	-	0.03
STACK EXHAUST GAS							
Fuel x, in CxHy		1.04	1.04	1.04	1.04	1.04	1.04
Fuel y, in Cx,Hy		4.02	4.02	4.02	4.02	4.02	4.02
DB Fuel Flow Rate	lbmole/hr	-	919	-	919	-	919
Oxygen Consumed at DB, O2	lbmole/hr	-	1,875	-	1,875	-	1,875
Carbon Dioxide Produced at DB, CO2	lbmole/hr	-	951	-	951	-	951
Water Produced at DB, H2O	lbmole/hr	-	1,847	-	1,847	-	1,847
Stack Exhaust Oxygen, O2	lbmole/hr	15,527	13,652	14,816	12,941	13,722	11,847
Stack Exhaust Carbon Dioxide, CO2	lbmole/hr	5,049	6,001	4,775	5,727	4,171	5,123
Stack Exhaust Water, H2O	lbmole/hr	9,972	11,819	10,775	12,622	9,441	11,287
Stack Exhaust Nitrogen, N2	lbmole/hr	94,548	94,548	90,853	90,853	81,452	81,452
Stack Exhaust Argon, Ar	lbmole/hr	1,136	1,136	1,102	1,102	988	988
Stack Exhaust Flow Rate	lbmole/hr	126,232	127,155	122,320	123,244	109,774	110,697
Stack Exhaust Oxygen, O2	%vol	12.3	10.7	12.1	10.5	12.5	10.7
Stack Exhaust Carbon Dioxide, CO2	%vol	4.0	4.7	3.9	4.6	3.8	4.6
Stack Exhaust Water, H2O	%vol	7.9	9.3	8.8	10.2	8.6	10.2
Stack Exhaust Nitrogen, N2	%vol	74.9	74.4	74.3	73.7	74.2	73.6
Stack Exhaust Argon, Ar	%vol	0.9	0.9	0.9	0.9	0.9	0.9
Stack Exhaust Flow Rate	%vol	100.0	100.0	100.0	100.0	100.0	100.0
Molecular Weight (Stack Exhaust Gases)	lb/lbmole	28.5	28.4	28.3	28.3	28.4	28.3
Stack Exhaust Flow Rate	scfm	810,628	816,558	785,510	791,440	704,938	710,868
Stack Exhaust Flow Rate	dscfm	746,589	740,659	716,316	710,387	644,313	638,384
Stack Exit Temperature	ºF	179	179	179	179	179	179
Stack Exit Pressure	psia	12.83	12.83	12.83	12.83	12.83	12.83
Stack Exhaust Flow Rate	acfm	1,206,138	1,214,960	1,168,765	1,177,587	1,048,881	1,057,704
Stack Diameter	ft	18.0	18.0	18.0	18.0	18.0	18.0
Stack Velocity	fps	79.0	79.6	76.5	77.1	68.7	69.3

HOBBS 501F4 Hourly Emission Rate Calculation (100% Load)

		Case 4 Unfired Winter Chillers Off	Case 4 Fired Winter Chillers Off	Case 5 Unfired Summer Chillers On	Case 5 Fired Summer Chillers On	Case 6 Unfired Summer Chillers Off	Case 6 Fired Summer Chillers Off
STACK EMISSION RATES							
NOx (pre-SCR)	ppmvd @ 15% O2	25.1	21.9	24.9	21.6	24.9	21.2
NOx (pre-SCR)	ppmvd	32.2	33.7	32.2	33.7	30.5	32.3
NOx (pre-SCR as NO2)	lb/hr	172.0	178.6	165.0	171.6	141.0	147.6
NOx (post-SCR)	ppmvd @ 15% O2	2.0	2.0	2.0	2.0	2.0	2.0
NOx (post-SCR)	ppmvd	2.6	3.1	2.6	3.1	2.4	3.0
NOx (post-SCR as NO2)	lb/hr	13.7	16.3	13.3	15.9	11.3	13.9
CO (pre-Catalytic Oxidation)	ppmvd @ 15% O2	15.1	13.5	14.9	13.2	15.1	13.2
CO (pre-Catalytic Oxidation)	ppmvd	19.3	20.7	19.2	20.6	18.5	20.1
CO (pre-Catalytic Oxidation)	lb/hr	63.0	66.8	60.0	63.8	52.0	55.8
CO (post-Catalytic Oxidation)	ppmvd @ 15% O2	2.0	2.0	2.0	2.0	2.0	2.0
CO (post-Catalytic Oxidation)	ppmvd	2.6	3.1	2.6	3.1	2.4	3.0
CO (post-Catalytic Oxidation)	lb/hr	8.3	9.9	8.1	9.7	6.9	8.5
VOC (pre-Catalytic Oxidation)	ppmvd @ 15% O2	2.0	1.8	2.0	1.8	2.0	1.8
VOC (pre-Catalytic Oxidation)	ppmvd	2.6	2.8	2.6	2.8	2.4	2.7
VOC (pre-Catalytic Oxidation as CH4)	lb/hr	4.8	5.2	4.6	5.0	3.9	4.3
VOC (post-Catalytic Oxidation)	ppmvd @ 15% O2	1.0	1.0	1.0	1.0	1.0	1.0
VOC (post-Catalytic Oxidation)	ppmvd	1.3	1.5	1.3	1.6	1.2	1.5
VOC (post-Catalytic Oxidation as CH4)	lb/hr	2.4	2.8	2.3	2.8	2.0	2.4
SO2	ppmvd @ 15% O2	0.9	0.9	0.9	0.9	0.9	0.9
SO2	ppmvd	1.1	1.4	1.1	1.4	1.1	1.3
SO2	lb/hr	8.4	10.0	8.0	9.7	6.9	8.6
PM10	lb/hr	11.23	17.01	10.89	16.66	9.77	15.54
PM10	lb/MMBtu (LHV)	0.0066	0.0084	0.0067	0.0085	0.0070	0.0090
HCHO	lb/hr	0.4	0.4	0.4	0.4	0.3	0.4
NH3	ppmvd @ 15% O2	10.0	10.0	10.0	10.0	10.0	10.0
NH3	ppmvd	12.8	15.4	12.9	15.6	12.2	15.2
NH3	lb/hr	25.3	30.2	24.5	29.4	20.9	25.8

Vendor Data

Process Input Data

HOBBS 501F4 Hourly Emission Rate (100% Load) Example Calculation
(Example calculations for Case 4 Fired unless otherwise noted)

FACILITY CONDITIONS

GT Fuel Flow Rate (MMscf/hr) = GT Heat Input (MMBtu/hr) / Fuel Heat Content (Btu/scf)
GT Fuel Flow Rate = 1,811 MMBtu/hr / 1,033 Btu/scf = 1.75 MMscf/hr

DB Heat Input (HHV) (MMBtu/hr) = DB Heat Input (LHV) (MMBtu/hr) * HHV/LHV Ratio
DB Heat Input (HHV) = 330 MMBtu/hr * 1.1 = 366 MMBtu/hr

DB Fuel Flow Rate (MMscf/hr) = DB Heat Input (MMBtu/hr) / Fuel Heat Content (Btu/scf)
DB Fuel Flow Rate = 366 MMBtu/hr / 1,033 Btu/scf = 0.35 MMscf/hr

FUEL ANALYSIS

HHV/LHV Ratio = Fuel Heat Content (HHV) (Btu/scf) / Fuel Heat Content (LHV) (Btu/scf)
HHV/LHV Ratio = 1,033 Btu/scf / 932 Btu/scf = 1.1

GT EXHAUST GAS ANALYSIS

Molecular Weight (GT Exhaust Gases) = Sum (%vol * MW)
Molecular Weight (GT Exhaust Gases) = 12.3 %vol * 32.0 lb/lbmole + 4.0 % vol * 44.0 lb/lbmole + 7.9 %vol * 18.0 lb/lbmole + 74.9 %vol * 28.0 lb/lbmole + 0.9 %vol * 39.9 lb/lbmole = 28.5 lb/lbmole

GT Exhaust Flow Rate (lbmole/hr) = GT Exhaust Flow Rate (lb/hr) / MW GT Exhaust Gases (lb/lbmole)
GT Exhaust Flow Rate = 3,592,532 lb/hr / 28.5 lb/lbmole = 126,232 lbmole/hr

GT Exhaust Flow Rate (MMscf/hr) = GT Exhaust Flow Rate (lbmole/hr) * Standard Molar Volume (scf/lbmole) * 1 MMscf/1,000,000 scf
GT Exhaust Flow Rate = 126,232 lbmole/hr * 385.3 scf/lbmole * 1MMscf / 1,000,000scf = 48.6 MMscf/hr

GT Exhaust Flow Rate (Nm^3/hr) = GT Exhaust Flow Rate (MMscf/hr) * 1,000,000 scf/MMscf / 35.3 scf/Nm^3
GT Exhaust Flow Rate = 48.6 MMscf/hr * 1,000,000 scf/MMscf / 35.3 scf/Nm3 = 1,377,266 Nm3/hr

GT Exhaust O_2 (lbmole/hr) = GT Exhaust (lbmole/hr) * O_2%
GT Exhaust O2 = 126,232 lbmole/hr * 12.3% = 15,527 lbmole/hr

GT Exhaust CO_2 (lbmole/hr) = GT Exhaust (lbmole/hr) * CO_2%
GT Exhaust CO2 = 126,232 lbmole/hr * 4.0% = 5,049 lbmole/hr

GT Exhaust H_2O (lbmole/hr) = GT Exhaust (lbmole/hr) * H_2O%
GT Exhaust H2O = 126,232 lbmole/hr * 7.9% = 9,972 lbmole/hr

GT Exhaust N_2 (lbmole/hr) = GT Exhaust (lbmole/hr) * N_2%
GT Exhaust N2 = 126,232 lbmole/hr * 74.9% = 94,548 lbmole/hr

GT Exhaust Ar (lbmole/hr) = GT Exhaust (lbmole/hr) * Ar%
GT Exhaust Ar = 126,232 lbmole/hr * 0.9% = 1,136 lbmole/hr

HOBBS 501F4 Hourly Emission Rate (100% Load) Example Calculation
(Example calculations for Case 4 Fired unless otherwise noted)

GT EMISSION RATES

NOx (ppmvd) = NOx (ppmvd @ 15% O2) * (20.9-O2 vol%/(1-H2O vol%/100))/(20.9-15)
NOx = 25 ppmvd @ 15% O2 * (20.9 - 12.3 / (1 - 7.9/100)) / (20.9-15) = 32 ppmvd

CO (ppmvd) = CO (ppmvd @ 15% O2) * (20.9-O2 vol%/(1-H2O vol%/100))/(20.9-15)
CO = 15 ppmvd @ 15% O2 * (20.9 - 12.3 / (1 - 7.9/100)) / (20.9-15) = 19 ppmvd

VOC (ppmvd) = VOC (ppmvd @ 15% O2) * (20.9-O2 vol%/(1-H2O vol%/100))/(20.9-15)
VOC = 2.0 ppmvd @ 15% O2 * (20.9 - 12.3 / (1 - 7.9/100)) / (20.9-15) = 2.6 ppmvd

SO_2 (lb/hr) = Sulfur Content (grains/Hscf) * 1 Hscf/100scf * 1 lb_S/7,000 grains / MW_S (lb_S/$lbmole_S$) * 1$lbmole_{SO2}$/$lbmole_S$ * MW_{SO2} (lb_{SO2}/$lbmole_{SO2}$) * GT Fuel Flow Rate (MMScf/hr) * 1,000,000 scf/MMscf
SO2 = 1.7 grains/Hscf * 1 Hscf/100scf * 1 lbS/7,000grains / 32.1 lbS/lbmoleS * 1lbmoleSO2/lbmoleS * 64.1 lbSO2/lbmoleSO2 * 1.8 MMscf/hr * 1,000,000 scf/MMscf = 8.4 lb/hr

PM_{10} (lb/hr) = PM_{10} (mg/Nm^3) * GT Exhaust Flow Rate (Nm^3/hr) * 1g/1,000 mg * 1 lb/453,59g
PM10 = 3.7 mg/Nm3 * 1,377,266 Nm3/hr * 1g/1,000mg * 1lb/453.59g = 11.2 lb/hr

HCHO (ppmvd) = HCHO (ppbvd @ 15% O2) * (20.9-O2 vol%/(1-H2O vol%/100))/(20.9-15) * 1 ppmvd/1,000 ppbvd
HCHO = 91 ppbvd @ 15% O2 * (20.9 - 12.3 / (1 - 7.9/100)) / (20.9-15) * 1 ppmvd/1,000 ppbvd = 0.1 ppmvd

HCHO (lb/hr) = GT Exhaust Flow Rate (lbmole/hr) * (1 - H_2O vol%/100) * HCHO (ppmvd) / 1,000,000 * MW_{HCHO} (lb/lbmole)
HCHO = 126,232 lbmole/hr * (1 - 7.9/100) * 0.1 ppmvd/1,000,000 * 30.0 lb/lbmole = 0.4 lb/hr

DB EMISSION RATES

NOx (lb/hr) = NOx (lb/MMBtu) (LHV) * DB Heat Input (LHV) (MMBtu/hr)
NOx = 0.02 lb/MMBtu (LHV) * 330 MMBtu/hr (LHV) = 6.6 lb/hr

CO (lb/hr) = CO (lb/MMBtu) (LHV) * DB Heat Input (LHV) (MMBtu/hr)
CO= 0.012 lb/MMBtu (LHV) * 330 MMBtu/hr (LHV) = 3.8 lb/hr

VOC (lb/hr) = VOC (lb/MMBtu) (LHV) * DB Heat Input (LHV) (MMBtu/hr)
VOC= 0.0013 lb/MMBtu (LHV) * 330 MMBtu/hr (LHV) = 0.4 lb/hr

SO_2 (lb/hr) = Sulfur Content (grains/Hscf) * 1 Hscf/100scf * 1 lb_S/7,000 grains / MW_S (lb_S/$lbmole_S$) * 1$lbmole_{SO2}$/$lbmole_S$ * MW_{SO2} (lb_{SO2}/$lbmole_{SO2}$) * DB Fuel Flow Rate (MMScf/hr) * 1,000,000 scf/MMscf
SO2 = 1.7 grains/Hscf * 1 Hscf/100scf * 1 lbS/7,000grains / 32.1 lbS/lbmoleS * 1lbmoleSO2/lbmoleS * 64.1 lbSO2/lbmoleSO2 * 0.35 MMscf/hr * 1,000,000 scf/MMscf = 1.7 lb/hr

PM_{10} (lb/hr) = PM_{10} (lb/MMBtu) (LHV) * DB Heat Input (LHV) (MMBtu/hr)
PM10= 0.0175 lb/MMBtu (LHV) * 330 MMBtu/hr (LHV) = 5.8 lb/hr

HCHO Emission Factor (lb/MMBtu) (HHV) = HCHO Emission Factor (lb/MMscf) (HHV) / 1,020 Btu/scf
HCHO Emission Factor = 7.50 E-02 lb/MMscf (HHV) / 1,020 Btu/scf = 7.35E-05 lb/MMBtu (HHV)

HCHO (lb/hr) = HCHO (lb/MMBtu) (HHV) * DB Heat Input (HHV) (MMBtu/hr)
HCHO= 7.35E-05 lb/MMBtu (HHV) * 366 MMBtu/hr (HHV) = 0.03 lb/hr

HOBBS 501F4 Hourly Emission Rate (100% Load) Example Calculation
(Example calculations for Case 4 Fired unless otherwise noted)

STACK EXHAUST GAS
Fuel x, in CxHy = stoichiometric lbmoles of carbon in fuel
Fuel y, in Cx,Hy = stoichiometric lbmoles of hydrogen in fuel

DB Fuel Flow Rate (lbmole/hr) =DB Heat Input (HHV) (MMBtu/hr) * 1,000,000 Btu/MMBtu / Fuel Heat Content (HHV) (Btu/scf) / Standard Molar Volume (scf/lbmole)
DB Fuel Flow Rate = 366 MMBtu/hr * 1,000,000 Btu/MMBtu / 1,033 Btu/scf / 385.3 scf/lbmole = 919 lbmole/hr

O_2 Consumed at DB (lbmole/hr) = (Fuel x + Fuel y/4) * DB Fuel Flow Rate (lbmole/hr)
O2 Consumed at DB) = (1.04 + 4.02 / 4) * 919 lbmole/hr = 1,875 lbmole/hr

CO_2 Produced at DB (lbmole/hr) = Fuel x * DB Fuel Flow Rate (lbmole/hr)
CO2 Produced at DB = 1.04 * 919 lbmole/hr = 951 lbmole/hr

H_2O Produced at DB (lbmole/hr) = Fuel y / 2 * DB Fuel Flow Rate (lbmole/hr)
H2O Produced at DB = 4.02 / 2 * 919 lbmole/hr = 1,847 lbmole/hr

Stack Exhaust O_2 (lbmole/hr) = GT Exhaust O_2 (lbmole/hr) - DB Consumed O_2 (lbmole/hr)
Stack Exahust O2 = 15,527 lbmole/hr - 1,875 lbmole/hr = 13,652 lbmole/hr

Stack Exhaust CO_2 (lbmole/hr) = GT Exhaust CO_2 (lbmole/hr) + DB Produced CO_2 (lbmole/hr)
Stack Exhaust CO2 = 5,049 lbmole/hr + 951 lbmole/hr = 6,001 lbmole/hr

Stack Exhaust H_2O (lbmole/hr) = GT Exhaust H_2O (lbmole/hr) + DB Produced H_2O (lbmole/hr)
Stack Exahust H2O = 9,972 lbmole/hr + 1,847 lbmole/hr = 11,819 lbmole/hr

Stack Exhaust N_2 (lbmole/hr) = GT Exhaust N_2 (lbmole/hr)
Stack Exhaust N2 = 94,548 lbmole/hr

Stack Exhaust Ar (lbmole/hr) = GT Exhaust Ar (lbmole/hr)
Stack Exhaust Ar = 1,136 lbmole/hr

Stack Exhaust Flow Rate (lbmole/hr) = Sum Stack Exhaust Pollutants Flow Rates (lbmole/hr)
Stack Exhaust Flow Rate = 13,652 lbmole/hr + 6,001 lbmole/hr + 11,819 lbmole/hr + 94,548 lbmole/hr + 1,136 lbmole/hr = 127,155 lbmole/hr

Stack Exhaust i %vol = Stack Exhaust i (lbmole/hr) * 100 / Stack Exhaust Flow Rate (lbmole/hr)
Stack Exhaust O2 = 13,652 lbmole/hr * 100 /127,155 lbmole/hr = 10.7 %vol
Stack Exhaust CO2 = 6,001 lbmole/hr * 100 /127,155 lbmole/hr = 4.7 %vol
Stack Exhaust H2O = 11,819 lbmole/hr * 100 /127,155 lbmole/hr = 9.3 %vol
Stack Exhaust N2 = 94,548 lbmole/hr * 100 /127,155 lbmole/hr = 74.4 %vol
Stack Exhaust Ar = 1,136 lbmole/hr * 100 /127,155 lbmole/hr = 0.9 %vol

Molecular Weight (Stack Exhaust Gases) = Sum (%vol * MW)
Molecular Weight (GT Exhaust Gases) = 10.7 %vol * 32.0 lb/lbmole + 4.7 % vol * 44.0 lb/lbmole + 9.3 %vol * 18.0 lb/lbmole + 74.4 %vol * 28.0 lb/lbmole + 0.9 %vol * 39.9 lb/lbmole = 28.4 lb/lbmole

Stack Exhaust Flow Rate (scfm) = Stack Exhaust Flow Rate (lbmole/hr) * Standard Molar Volume (scf/lbmole) * 1hr/60min
Stack Exhaust Flow Rate = 127,155 lbmole/hr * 385.3 scf/lbmole * 1hr/60min = 816,558 scfm

Stack Exhaust Dry Flow Rate (dscfm) = Stack Exhaust Flow Rate (scfm) * (1 - H_2O/100)
Stack Exhaust Dry Flow Rate = 816,558 scfm * (1 - 9.3 %vol / 100) = 740,659 dscfm

Stack Exhaust Flow Rate (acfm) = Stack Exhaust Flow Rate (scfm) *((5/9*(Stack Exit Temp (F)-32)+273.15)/273.15)*(14.696/Stack Exit Pressure (psia))
Stack Exhaust Flow Rate = 816,558 * ((5/9*(179-32)+273.15) K / 273.15 K) *(14.696 psia / 12.83 psia) = 1,214,960 acfm

Stack Exit Velocity (fps) =Stack Exhaust Flow Rate (acfm) / (PI()/4 * Stack Diameter^2) (ft)^2 * 1min/60sec
Stack Exit Velocity = 1,214,960 / (PI()/4 * 18.0^2) ft^2 * 1min/60sec = 79.6 fps

HOBBS 501F4 Hourly Emission Rate (100% Load) Example Calculation
(Example calculations for Case 4 Fired unless otherwise noted)

STACK EMISSION RATES

NOx (pre-SCR as NO_2) (lb/hr) = GT NOx Exhaust (lb/hr) + DB NOx Exhaust (lb/hr)
NOx (pre-SCR as NO2) = 172.0 lb/hr + 6.6 lb/hr = 178.6 lb/hr

NOx (pre-SCR) (ppmvd) = NOx (pre-SCR as NO_2) (lb/hr) / (Stack Exhaust Flow Rate (lbmole/hr) * (1 - Stack Exhaust H_2O vol%/100) * 1/1,000,000 * MW_{NO2} (lb/lbmole))
NOx (pre-SCR) = 178.6 lb/hr /(127,155 lbmole/hr * (1 - 9.3 /100) * 1 / 1,000,000 * 46.0 lb/lbmole) = 33.7 ppmvd

NOx (pre-SCR) (ppmvd @ 15% O_2) = NOx (pre-SCR) (ppmvd) * (20.9 - 15) / (20.9 - Stack Exhaust O_2%/(1 - H_2O%/100))
NOx (pre-SCR) = 33.7 ppmvd * (20.9 - 15) / (20.9 - 10.7 / (1 - 9.3/100)) = 21.9 ppmvd @ 15% O2

NOx (post-SCR) (ppmvd) = NOx (post-SCR) (ppmvd @ 15% O_2) * (20.9-O_2 vol%/(1-H_2O vol%/100))/(20.9-15)
NOx (post-SCR) = 2.0 ppmvd @ 15% O2 * (20.9 - 10.7 / (1 - 9.3/100)) / (20.9 - 15) = 3.1 ppmvd

NOx (post-SCR as NO_2) (lb/hr) = NOx (post-SCR) (ppmvd) * (1 - H_2O %vol/100) * Stack Exhaust Flow Rate (lbmole/hr) /1,000,000 * MW_{NO2} (lb/lbmole)
NOx (post-SCR as NO2) = 3.1 ppmvd * (1 - 9.3/100) * 127,155 lbmole/hr / 1,000,000 * 46.0 lb/lbmole = 16.3 lb/hr

CO (pre-Catalytic Oxidation) (lb/hr) = GT CO Exhaust (lb/hr) + DB CO Exhaust (lb/hr)
CO (pre-Catalytic Oxydation) = 63.0 lb/hr + 3.8 lb/hr = 66.8 lb/hr

CO (pre-Catalytic Oxidation) (ppmvd) = CO (pre-Catalytic Oxidation) (lb/hr) / (Stack Exhaust Flow Rate (lbmole/hr) * (1 - Stack Exhaust H_2O vol%/100) * 1/1,000,000 * MW_{CO} (lb/lbmole))
CO (pre-Catalytic Oxidation) = 66.8 lb/hr /(127,155 lbmole/hr * (1 - 9.3 /100) * 1 / 1,000,000 * 28.0 lb/lbmole) = 20.7 ppmvd

CO (pre-Catalytic Oxidation) (ppmvd @ 15% O_2) = CO (pre-Catalytic Oxidation) (ppmvd) * (20.9 - 15) / (20.9 - Stack Exhaust O_2%/(1 - H_2O%/100))
CO (pre-Catalytic Oxidation) = 20.7 ppmvd * (20.9 - 15) / (20.9 - 10.7 / (1 - 9.3/100)) = 13.5 ppmvd @ 15% O2

CO (post-Catalytic Oxidation) (ppmvd) = CO (post-Catalytic Oxidation) (ppmvd @ 15% O_2) * (20.9-O_2 vol%/(1-H_2O vol%/100))/(20.9-15)
CO (post-Catalytic Oxidation) = 2.0 ppmvd @ 15% O2 * (20.9 - 10.7 / (1 - 9.3/100)) / (20.9 - 15) = 3.1 ppmvd

CO (post-Catalytic Oxidation) (lb/hr) = CO (post-Catalytic Oxidation) (ppmvd) * (1 - H_2O %vol/100) * Stack Exhaust Flow Rate (lbmole/hr) /1,000,000 * MW_{CO} (lb/lbmole)
CO (post-Catalytic Oxidation) = 3.1 ppmvd * (1 - 9.3/100) * 127,155 lbmole/hr / 1,000,000 * 28.0 lb/lbmole = 9.9 lb/hr

VOC (pre-Catalytic Oxidation) (lb/hr) = GT VOC Exhaust (lb/hr) + DB VOC Exhaust (lb/hr)
VOC (pre-Catalytic Oxydation) = 4.8 lb/hr + 0.4 lb/hr = 5.2 lb/hr

VOC (pre-Catalytic Oxidation) (ppmvd) = VOC (pre-Catalytic Oxidation) (lb/hr) / (Stack Exhaust Flow Rate (lbmole/hr) * (1 - Stack Exhaust H_2O vol%/100) * 1/1,000,000 * MW_{VOC} (lb/lbmole))
VOC (pre-Catalytic Oxidation) = 5.2 lb/hr /(127,155 lbmole/hr * (1 - 9.3 /100) * 1 / 1,000,000 * 16.0 lb/lbmole) = 2.8 ppmvd

VOC (pre-Catalytic Oxidation) (ppmvd @ 15% O_2) = VOC (pre-Catalytic Oxidation) (ppmvd) * (20.9 - 15) / (20.9 - Stack Exhaust O_2%/(1 - H_2O%/100))
VOC (pre-Catalytic Oxidation) = 2.8 ppmvd * (20.9 - 15) / (20.9 - 10.7 / (1 - 9.3/100)) = 1.8 ppmvd @ 15% O2

VOC (post-Catalytic Oxidation) (ppmvd) = VOC (post-Catalytic Oxidation) (ppmvd @ 15% O_2) * (20.9-O_2 vol%/(1-H_2O vol%/100))/(20.9-15)
VOC (post-Catalytic Oxidation) = 1.0 ppmvd @ 15% O2 * (20.9 - 10.7 / (1 - 9.3/100)) / (20.9 - 15) = 1.5 ppmvd

VOC (post-Catalytic Oxidation) (lb/hr) = VOC (post-Catalytic Oxidation (ppmvd) * (1 - H_2O %vol/100) * Stack Exhaust Flow Rate (lbmole/hr) /1,000,000 * MW_{VOC} (lb/lbmole)
VOC (post-Catalytic Oxidation) = 1.5 ppmvd * (1 - 9.3/100) * 127,155 lbmole/hr / 1,000,000 * 16.0 lb/lbmole = 2.8 lb/hr

HOBBS 501F4 Hourly Emission Rate (100% Load) Example Calculation
(Example calculations for Case 4 Fired unless otherwise noted)

SO_2 (lb/hr) = GT SO_2 Exhaust (lb/hr) + DB SO_2 Exhaust (lb/hr)
SO2 - 8.4 lb/hr + 1.7 lb/hr = 10.0 lb/hr

SO_2(ppmvd) = SO_2 (lb/hr) / (Stack Exhaust Flow Rate (lbmole/hr) * (1 - Stack Exhaust H_2O vol%/100) * 1/1,000,000 * MW_{VOC} (lb/lbmole))
SO2 = 10.0 lb/hr /(127,155 lbmole/hr * (1 - 9.3 /100) * 1 / 1,000,000 * 64.1 lb/lbmole) = 1.4 ppmvd

SO_2 (ppmvd @ 15% O_2) = SO_2 (pre-Catalytic Oxidation) (ppmvd) * (20.9 - 15) / (20.9 - Stack Exhaust O_2%/(1 - H_2O%/100))
SO2 = 1.4 ppmvd * (20.9 - 15) / (20.9 - 10.7 / (1 - 9.3/100)) = 0.9 ppmvd @ 15% O2

PM_{10} (lb/hr) = GT PM_{10} Exhaust (lb/hr) + DB PM_{10} Exhaust (lb/hr)
PM10 - 11.2 lb/hr + 5.8 lb/hr = 17.0 lb/hr

PM_{10} (lb/MMBtu) (LHV) = PM_{10} (lb/hr) / (GT Heat Input (MMBtu/hr) (LHV) + DB Heat Input (MMBtu/hr) (LHV)
PM10 = 17.0 lb/hr / (1,697 MMBtu/hr (LHV) + 330 MMBtu/hr (LHV)) = 0.0084 lb/MMBtu

HCHO (lb/hr) = GT HCHO Exhaust (lb/hr) + DB HCHO Exhaust (lb/hr)
HCHO = 0.4 lb/hr + 0.03 lb/hr = 0.4 lb/hr

NH_3 (ppmvd) = NH_3 (ppmvd @ 15% O_2) * (20.9-O_2 vol%/(1-H_2O vol%/100))/(20.9-15)
NH3 = 10.0 ppmvd @ 15% O2 * (20.9 - 10.7 / (1 - 9.3/100)) / (20.9 - 15) = 15.4 ppmvd

NH_3 (lb/hr) = NH_3 (ppmvd) * (1 - H_2O %vol/100) * Stack Exhaust Flow Rate (lbmole/hr) /1,000,000 * MW_{NH3} (lb/lbmole)
NH3) = 15.4 ppmvd * (1 - 9.3/100) * 127,155 lbmole/hr / 1,000,000 * 17.0 lb/lbmole = 30.2 lb/hr

HOBBS 501F4 Annual Emission Rate Calculation (100% Load) (8,760 hr/yr)

		Case 4 Unfired Winter Chillers Off	Case 4 Fired Winter Chillers Off	Case 5 Unfired Summer Chillers On	Case 5 Fired Summer Chillers On	Case 6 Unfired Summer Chillers Off	Case 6 Fired Summer Chillers Off
SITE CONDITIONS							
Ambient Temperature	ºF	30	30	95	95	95	95
Ambient Relative Humidity	%	20	20	95	95	20	20
Barometric Pressure	psia	12.83	12.83	12.83	12.83	12.83	12.83
Compressor Inlet Temperature	ºF	30	30	46	46	95	95
FACILITY CONDITIONS							
Annual Hours of Operation	hr/yr	1,401	1,080	1,646	1,269	1,899	1,464
GT Power Output	MW	180	180	172	172	141	141
GT Model		Hobbs 501F4	Hobbs 501F4	Hobbs 501F4	Hobbs 501F4	Hobbs 501F4	Hobbs 501F4
GT Load		Base	Base	Base	Base	Base	Base
Chillers	On/Off	Off	Off	**On**	**On**	Off	Off
GT Fuel Flow Rate	lb/hr	82,176	82,176	79,115	79,115	67,668	67,668
GT Heat Input (LHV)	MMBtu/hr	1,697	1,697	1,633	1,633	1,397	1,397
GT Heat Input (HHV)	MMBtu/hr	1,811	1,811	1,743	1,743	1,491	1,491
GT Heat Input (LHV)	MMBtu/yr	2,377,829	1,832,760	2,688,580	2,072,277	2,653,460	2,045,208
GT Heat Input (HHV)	MMBtu/yr	2,537,566	1,955,880	2,869,684	2,211,867	2,832,004	2,182,824
GT Fuel Flow Rate	MMscf/yr	2,456	1,893	2,778	2,141	2,741	2,113
DB Model		Forney	Forney	Forney	Forney	Forney	Forney
DB Status		Off	On	Off	On	Off	On
DB Heat Input (LHV)	MMBtu/yr	-	345,600	-	406,080	-	445,056
DB Heat Input (HHV)	MMBtu/yr	-	383,187	-	450,244	-	493,459
DB Fuel Flow Rate	MMscf/yr	-	371	-	436	-	478
GT+DB Heat Input (LHV)	MMBtu/yr	2,377,829	2,178,360	2,688,580	2,478,357	2,653,460	2,490,264
GT+DB Heat Input (HHV)	MMBtu/yr	2,537,566	2,339,067	2,869,684	2,662,111	2,832,004	2,676,283
FUEL ANALYSIS							
Fuel Type		PNG	PNG	PNG	PNG	PNG	PNG
Fuel Molecular Weight	lb/lbmole	17.29	17.29	17.29	17.29	17.29	17.29
Sulfur Content	grains/100scf	1.8	1.8	1.8	1.8	1.8	1.8
Fuel Heat Content (LHV)	Btu/scf	932	932	932	932	932	932
Fuel Heat Content (HHV)	Btu/scf	1,033	1,033	1,033	1,033	1,033	1,033
HHV/LHV Ratio		1.1	1.1	1.1	1.1	1.1	1.1
GT EXHAUST GAS ANALYSIS							
Oxygen, O2	%vol	12.3	12.3	12.1	12.1	12.5	12.5
Carbon Dioxide, CO2	%vol	4.0	4.0	3.9	3.9	3.8	3.8
Water, H2O	%vol	7.9	7.9	8.8	8.8	8.6	8.6
Nitrogen, N2	%vol	74.9	74.9	74.3	74.3	74.2	74.2
Argon, Ar	%vol	0.9	0.9	0.9	0.9	0.9	0.9
Total	%vol	100.0	100.0	100.0	100.0	100.0	100.0
Molecular Weight (GT Exhaust Gases)	lb/lbmole	28.5	28.5	28.3	28.3	28.4	28.4
GT Exhaust Temperature	ºF	1,145	1,145	1,156	1,156	1,168	1,168
GT Exhaust Flow Rate	lb/hr	3,592,532	3,592,532	3,467,318	3,467,318	3,113,817	3,113,817
GT Exhaust Flow Rate	lbmole/yr	176,875,473	136,330,337	201,388,957	155,224,599	208,503,917	160,708,598
GT Exhaust Flow Rate	MMscf/yr	68,151	52,529	77,596	59,809	80,338	61,922
GT Exhaust Flow Rate	Nm3/yr	1,929,819,691	1,487,447,439	2,197,276,813	1,693,595,409	2,274,905,385	1,753,429,196
GT Exhaust Oxygen, O2	lbmole/yr	21,755,683	16,768,631	24,392,456	18,800,977	26,062,990	20,088,575
GT Exhaust Carbon Dioxide, CO2	lbmole/yr	7,075,019	5,453,213	7,862,031	6,059,819	7,923,149	6,106,927
GT Exhaust Water, H2O	lbmole/yr	13,973,162	10,770,097	17,739,968	13,673,438	17,931,337	13,820,939
GT Exhaust Nitrogen, N2	lbmole/yr	132,479,729	102,111,422	149,580,186	115,291,945	154,709,907	119,245,780
GT Exhaust Argon, Ar	lbmole/yr	1,591,879	1,226,973	1,814,315	1,398,420	1,876,535	1,446,377

HOBBS 501F4 Annual Emission Rate Calculation (100% Load) (8,760 hr/yr)

		Case 4 Unfired Winter Chillers Off	Case 4 Fired Winter Chillers Off	Case 5 Unfired Summer Chillers On	Case 5 Fired Summer Chillers On	Case 6 Unfired Summer Chillers Off	Case 6 Fired Summer Chillers Off
GT EMISSION RATES							
NOx	ppmvd @ 15% O2	25	25	25	25	25	25
NOx	ppmvd	32	32	32	32	31	31
NOx (as NO2)	lb/hr	172	172	165	165	141	141
NOx (as NO2)	lb/yr	241,006	185,760	271,657	209,385	267,815	206,424
CO	ppmvd @ 15% O2	15	15	15	15	15	15
CO	ppmvd	19	19	19	19	18	18
CO	lb/hr	63	63	60	60	52	52
CO	lb/yr	88,275	68,040	98,784	76,140	98,769	76,128
VOC	ppmvd @ 15% O2	2.0	2.0	2.0	2.0	2.0	2.0
VOC	ppmvd	2.6	2.6	2.6	2.6	2.4	2.4
VOC (as CH4)	lb/hr	4.8	4.8	4.6	4.6	3.9	3.9
VOC (as CH4)	lb/yr	6,726	5,184	7,573	5,837	7,408	5,710
Sulfur Content	grains/100scf	1.8	1.8	1.8	1.8	1.8	1.8
SO2	lb/yr	12,848	9,903	14,530	11,199	14,339	11,052
PM10	mg/Nm3	3.7	3.7	3.7	3.7	3.7	3.7
PM10	lb/yr	15,742	12,133	17,923	13,815	18,557	14,303
Formaldehyde, HCHO	ppbvd @ 15% O2	91	91	91	91	91	91
Formaldehyde, HCHO	ppmvd	0.1	0.1	0.1	0.1	0.1	0.1
Formaldehyde, HCHO	lb/yr	569	439	648	499	638	491
DB EMISSION RATES							
NOx	lb/MMBtu (LHV)	0.02	0.02	0.02	0.02	0.02	0.02
NOx	lb/yr	-	6,912	-	8,122	-	8,901
CO	lb/MMBtu (LHV)	0.012	0.012	0.012	0.012	0.012	0.012
CO	lb/yr	-	4,020	-	4,724	-	5,177
VOC	lb/MMBtu (LHV)	0.0013	0.0013	0.0013	0.0013	0.0013	0.0013
VOC (as CH4)	lb/yr	-	438	-	514	-	564
Sulfur Content	grains/100scf	1.8	1.8	1.8	1.8	1.8	1.8
SO2	lb/yr	-	1,940	-	2,280	-	2,498
PM10	lb/MMBtu (LHV)	0.0175	0.0175	0.0175	0.0175	0.0175	0.0175
PM10	lb/yr	-	6,048	-	7,106	-	7,788
Formaldehyde, HCHO	lb/MMscf (HHV)	7.50E-02	7.50E-02	7.50E-02	7.50E-02	7.50E-02	7.50E-02
Formaldehyde, HCHO	lb/MMBtu (HHV)	7.35E-05	7.35E-05	7.35E-05	7.35E-05	7.35E-05	7.35E-05
Formaldehyde, HCHO	lb/yr	-	28.2	-	33.1	-	36.3
STACK EXHAUST GAS							
Fuel x, in CxHy		1.04	1.04	1.04	1.04	1.04	1.04
Fuel y, in Cx,Hy		4.02	4.02	4.02	4.02	4.02	4.02
DB Fuel Flow Rate	lbmole/yr	-	962,713	-	1,131,188	-	1,239,760
Oxygen Consumed at DB, O2	lbmole/yr	-	1,963,401	-	2,306,996	-	2,528,424
Carbon Dioxide Produced at DB, CO2	lbmole/yr	-	996,423	-	1,170,797	-	1,283,171
Water Produced at DB, H2O	lbmole/yr	-	1,933,956	-	2,272,399	-	2,490,506
Stack Exhaust Oxygen, O2	lbmole/yr	21,755,683	14,805,231	24,392,456	16,493,982	26,062,990	17,560,151
Stack Exhaust Carbon Dioxide, CO2	lbmole/yr	7,075,019	6,449,636	7,862,031	7,230,616	7,923,149	7,390,098
Stack Exhaust Water, H2O	lbmole/yr	13,973,162	12,704,053	17,739,968	15,945,837	17,931,337	16,311,445
Stack Exhaust Nitrogen, N2	lbmole/yr	132,479,729	102,111,422	149,580,186	115,291,945	154,709,907	119,245,780
Stack Exhaust Argon, Ar	lbmole/yr	1,591,879	1,226,973	1,814,315	1,398,420	1,876,535	1,446,377
Stack Exhaust Flow Rate	lbmole/yr	176,875,473	137,297,315	201,388,957	156,360,799	208,503,917	161,953,851
Stack Exhaust Oxygen, O2	%vol	12.3	10.8	12.1	10.5	12.5	10.8
Stack Exhaust Carbon Dioxide, CO2	%vol	4.0	4.7	3.9	4.6	3.8	4.6
Stack Exhaust Water, H2O	%vol	7.9	9.3	8.8	10.2	8.6	10.1
Stack Exhaust Nitrogen, N2	%vol	74.9	74.4	74.3	73.7	74.2	73.6
Stack Exhaust Argon, Ar	%vol	0.9	0.9	0.9	0.9	0.9	0.9
Stack Exhaust Flow Rate	%vol	100.0	100.0	100.0	100.0	100.0	100.0
Molecular Weight (Stack Exhaust Gases)	lb/lbmole	28.5	28.4	28.3	28.3	28.4	28.3

HOBBS 501F4 Annual Emission Rate Calculation (100% Load) (8,760 hr/yr)

		Case 4 Unfired Winter Chillers Off	Case 4 Fired Winter Chillers Off	Case 5 Unfired Summer Chillers On	Case 5 Fired Summer Chillers On	Case 6 Unfired Summer Chillers Off	Case 6 Fired Summer Chillers Off
STACK EMISSION RATES							
NOx (pre-SCR)	ppmvd @ 15% O2	25.1	22.0	24.9	21.7	24.9	21.4
NOx (pre-SCR)	ppmvd	32.2	33.6	32.2	33.7	30.5	32.1
NOx (pre-SCR as NO2)	lb/yr	241,006	192,672	271,657	217,507	267,815	215,325
NOx (pre-SCR as NO2)	tpy	120.5	96.3	135.8	108.8	133.9	107.7
NOx (post-SCR)	ppmvd @ 15% O2	2	2	2	2	2	2
NOx (post-SCR)	ppmvd	2.6	3.1	2.6	3.1	2.4	3.0
NOx (post-SCR as NO2)	lb/yr	19,168	17,521	21,818	20,044	21,469	20,085
NOx (post-SCR as NO2)	tpy	9.6	8.8	10.9	10.0	10.7	10.0
CO (pre-Catalytic Oxidation)	ppmvd @ 15% O2	15.1	13.5	14.9	13.3	15.1	13.3
CO (pre-Catalytic Oxidation)	ppmvd	19.3	20.6	19.2	20.6	18.5	19.9
CO (pre-Catalytic Oxidation)	lb/yr	88,275	72,060	98,784	80,864	98,769	81,305
CO (pre-Catalytic Oxidation)	tpy	44.1	36.0	49.4	40.4	49.4	40.7
CO (post-Catalytic Oxidation)	ppmvd @ 15% O2	2	2	2	2	2	2
CO (post-Catalytic Oxidation)	ppmvd	2.6	3.1	2.6	3.1	2.4	3.0
CO (post-Catalytic Oxidation)	lb/yr	11,670	10,668	13,284	12,204	13,072	12,229
CO (post-Catalytic Oxidation)	tpy	5.8	5.3	6.6	6.1	6.5	6.1
VOC (pre-Catalytic Oxidation)	ppmvd @ 15% O2	2.0	1.8	2.0	1.8	2.0	1.8
VOC (pre-Catalytic Oxidation)	ppmvd	2.6	2.8	2.6	2.8	2.4	2.7
VOC (pre-Catalytic Oxidation as CH4)	lb/yr	6,726	5,622	7,573	6,352	7,408	6,273
VOC (pre-Catalytic Oxidation as CH4)	tpy	3.4	2.8	3.8	3.2	3.7	3.1
VOC (post-Catalytic Oxidation)	ppmvd @ 15% O2	0.6	0.6	0.6	0.6	0.6	0.6
VOC (post-Catalytic Oxidation)	ppmvd	0.8	0.9	0.8	0.9	0.7	0.9
VOC (post-Catalytic Oxidation as CH4)	lb/yr	2,005	1,833	2,282	2,097	2,246	2,101
VOC (post-Catalytic Oxidation as CH4)	tpy	1.0	0.9	1.1	1.0	1.1	1.1
SO2	ppmvd @ 15% O2	1.0	1.0	1.0	1.0	1.0	1.0
SO2	ppmvd	1.2	1.5	1.2	1.5	1.2	1.5
SO2	lb/yr	12,848	11,843	14,530	13,479	14,339	13,550
SO2	tpy	6.4	5.9	7.3	6.7	7.2	6.8
PM10	lb/yr	15,742	18,181	17,923	20,921	18,557	22,091
PM10	tpy	7.9	9.1	9.0	10.5	9.3	11.0
HCHO	lb/yr	569	467	648	532	638	528
HCHO	tpy	0.3	0.2	0.3	0.3	0.3	0.3
NH3	ppmvd @ 15% O2	10	10	10	10	10	10
NH3	ppmvd	12.8	15.3	12.9	15.5	12.2	15.0
NH3	lb/yr	35,476	32,428	40,381	37,098	39,736	37,174
NH3	tpy	17.7	16.2	20.2	18.5	19.9	18.6
CO2	lb/MMBtu (HHV)	118.8	118.8	118.8	118.8	118.8	118.8
N2O	lb/MMBtu (HHV)	2.2E-04	2.2E-04	2.2E-04	2.2E-04	2.2E-04	2.2E-04
CH4	lb/MMBtu (HHV)	2.2E-03	2.2E-03	2.2E-03	2.2E-03	2.2E-03	2.2E-03
CO2	tpy	150,749	138,956	170,479	158,147	168,240	158,989
N2O	tpy	0.28	0.26	0.32	0.29	0.31	0.30
CH4	tpy	2.80	2.58	3.16	2.93	3.12	2.95
CO2 Global Warming Potential	-	1	1	1	1	1	1
N2O Global Warming Potential	-	298	298	298	298	298	298
CH4 Global Warming Potential	-	25	25	25	25	25	25
Total GHG	tpy	150,752	138,959	170,482	158,151	168,244	158,992
Total CO2e	tpy	150,902	139,098	170,652	158,308	168,411	159,151

Vendor Data

Process Input Data

HOBBS 501F4 Annual Emission Rate (100% Load) Example Calculation
(Example calculations for Case 4 Fired unless otherwise noted)

FACILITY CONDITIONS

Annual Hours of Operation with Duct Firing:
12 hr/day December, January, February, June, July, August and September
9 hr/day March, April, May, November
12 days annual outage (9 hr/day)

Case 4 Fired - Winter - Chillers Off = 12 hr/day * (31 days + 31days + 28 days) = 1,080 hr/yr
Case 4 Unfired - Winter - Chillers Off = 1,080 hr fired/yr * 4,947 total hr unfired/yr / 3,813 total hrfired/yr = 1,401 hr/yr

Case 5 Fired - Summer- Chillers On = 9 hr/day * (31 days + 30 days + 31days + 31 days + 30 days - 12 days) = 1,269 hr/yr
Case 5 Unfired - Summer - Chillers On = 1,269 hr fired/yr * 4,947 total hr unfired/yr / 3,813 total hrfired/yr = 1,646 hr/yr

Case 6 Fired - Summer- Chillers Off = 12 hr/day * (30 days + 31 days + 31 days + 30 days) = 1,464 hr/yr
Case 6 Unfired - Summer - Chillers On = 1,464 hr fired/yr * 4,947 total hr unfired/yr / 3,813 total hrfired/yr = 1,899 hr/yr

GT Heat Input (MMBtu/yr) = GT Heat Input (MMBtu/hr) * Annual Hours of Operation (hr/yr)
GT Heat Input (LHV) = 1,697 MMBtu/hr * 1,080 hr/yr = 1,832,760 MMBtu/yr
GT Heat Input (LHV) = 1,811 MMBtu/hr * 1,080 hr/yr = 1,955,880 MMBtu/yr

GT Fuel Flow Rate (MMscf/yr) = GT Heat Input (MMBtu/yr) (HHV) / Fuel Heat Content (HHV) (Btu/scf)
GT Fuel Flow Rate = 1,955,880 MMBtu/yr / 1,033 Btu/scf = 1,893 MMscf/yr

DB Heat Input (MMBtu/yr) = DB Heat Input (MMBtu/hr) * Annual Hours of Operation (hr/yr)
Case 4 DB Heat Input = 320 MMBtu/hr * 1,080 hr/yr = 345,600 MMBtu/yr
Case 5 DB Heat Input = 320 MMBtu/hr * 1,269 hr/yr = 406,080 MMBtu/yr
Case 6 DB Heat Input = 304 MMBtu/hr * 1,464 hr/yr = 445,056 MMBtu/yr

DB Heat Input (MMBtu/yr) (HHV) = DB Heat Input (MMBtu/yr) (LHV) * HHV/LHV Ratio
DB Heat Input (HHV) = 345,600 MMBtu/yr * 1.1 = 383,187 MMBtu/yr

DB Fuel Flow Rate (MMscf/yr) = DB Heat Input (MMBtu/yr) (HHV) / Fuel Heat Content (HHV) (Btu/scf)
DB Fuel Flow Rate = 383,187 MMBtu/yr / 1,033 Btu/scf = 371 MMscf/yr

GT+DB Heat Input (MMBtu/yr) = GT Heat Input (MMBtu/yr) + DB Heat Input (MMBtu/yr)
GT+DB Heat Input (LHV) = 1,832,760 MMBtu/yr + 345,600 MMBtu/yr = 2,178,360 MMBtu/yr
GT+DB Heat Input (HHV) = 1,955,880 MMBtu/yr + 383,187 MMBtu/yr = 2,339,067 MMBtu/yr

HHV/LHV Ratio = Fuel Heat Content (HHV) (Btu/scf) / Fuel Heat Content (LHV) (Btu/scf)
HHV/LHV Ratio = 1,033 Btu/scf / 932 Btu/scf = 1.1

GT EXHAUST GAS ANALYSIS

Molecular Weight (GT Exhaust Gases) = Sum (%vol * MW)
Molecular Weight (GT Exhaust Gases) = 12.3% vol * 32.0 lb/lbmole + 4.0% vol * 44.0 lb/lbmole + 7.9% vol * 18.0 lb/lbmole + 74.9% vol * 28.0 lb/lbmole + 0.9% vol * 39.9 lb/lbmole = 28.5 lb/lbmole

GT Exhaust Flow Rate (lbmole/yr) = GT Exhaust Flow Rate (lb/hr) / MW (GT Exhaust Gases) * Annual Hours of Operation (hr/yr)
GT Exhaust Flow Rate = 3,592,532 lb/hr / 28.5 lb/lbmole * 1,080 hr/yr = 136,330,337 lbmole/yr

GT Exhaust Flow Rate (MMscf/yr) = GT Exhaust Flow Rate (lbmole/yr) * Standard Molar Volume (scf/lbmole) * 1MMscf/1,000,000scf
GT Exhaust Flow Rate = 136,330,337 lbmole/yr * 385.3 scf/lbmole * 1 MMscf/1,000,000 scf = 52,529 MMscf/yr

GT Exhaust Flow Rate (Nm^3/yr) = GT Exhaust Flow Rate (MMscf/yr) * 1,000,000 scf/MMscf / 35.3 scf/Nm^3
GT Exhaust Flow Rate = 52,529 MMscf/yr * 1,000,000 scf/MMscf / 35.3 scf/Nm3 = 1,487,447,439 Nm3/yr

HOBBS 501F4 Annual Emission Rate (100% Load) Example Calculation
(Example calculations for Case 4 Fired unless otherwise noted)

GT Exhaust O_2 (lbmole/hr) = GT Exhaust (lbmole/hr) * O_2%
GT Exhaust O2 = 136,330,337 lbmole/yr * 12.3% = 16,768,631 lbmole/yr

GT Exhaust CO_2 (lbmole/hr) = GT Exhaust (lbmole/hr) * CO_2%
GT Exhaust CO2 = 136,330,337 lbmole/yr * 4.0% = 5,453,213 lbmole/yr

GT Exhaust H_2O (lbmole/hr) = GT Exhaust (lbmole/hr) * H_2O%
GT Exhaust H2O = 136,330,337 lbmole/yr * 7.9% = 10,770,097 lbmole/yr

GT Exhaust N_2 (lbmole/hr) = GT Exhaust (lbmole/hr) * N_2%
GT Exhaust N2 = 136,330,337 lbmole/yr * 74.9% = 102,111,422 lbmole/yr

GT Exhaust Ar (lbmole/hr) = GT Exhaust (lbmole/hr) * Ar%
GT Exhaust Ar = 136,330,337 lbmole/yr * 0.9% = 1,226,973 lbmole/yr

GT EMISSION RATES

NOx (ppmvd) = NOx (ppmvd @ 15% O2) * (20.9-O2 vol%/(1-H2O vol%/100))/(20.9-15)
NOx = 25 ppmvd @ 15%O2 * (20.9 - 12.3 / (1 - 7.9 / 100)) / (20.9 - 15) = 32 ppmvd

NOx (lb/yr) = NOx (lb/hr) * Annual Hours of Operation (hr/yr)
NOx (lb/yr) = 172 lb/hr * 1,080 hr/yr = 185,760 lb/yr

CO (ppmvd) = CO (ppmvd @ 15% O2) * (20.9-O2 vol%/(1-H2O vol%/100))/(20.9-15)
CO = 15 ppmvd @ 15%O2 * (20.9 - 12.3 / (1 - 7.9 / 100)) / (20.9 - 15) = 19 ppmvd

CO (lb/yr) = CO (lb/hr) * Annual Hours of Operation (hr/yr)
CO (lb/yr) = 63 lb/hr * 1,080 hr/yr = 68,040 lb/yr

VOC (ppmvd) = VOC (ppmvd @ 15% O2) * (20.9-O2 vol%/(1-H2O vol%/100))/(20.9-15)
VOC = 2 ppmvd @ 15%O2 * (20.9 - 12.3 / (1 - 7.9 / 100)) / (20.9 - 15) = 2.6 ppmvd

VOC (lb/yr) = VOC (lb/hr) * Annual Hours of Operation (hr/yr)
VOC (lb/yr) = 5 lb/hr * 1,080 hr/yr = 5,184 lb/yr

SO_2 (lb/yr) = Sulfur Content (grains/Hscf) * 1 Hscf/100scf * 1 lb_S/7,000 grains / MW_S (lb_S/$lbmole_S$) * 1$lbmole_{SO2}$/$lbmole_S$ * MW_{SO2} (lb_{SO2}/$lbmole_{SO2}$) * GT Fuel Flow Rate (MMScf/yr) * 1,000,000 scf/MMscf
SO2 = 1.8 grains/Hscf * 1Hscf/100scf * 1lb/7,000grains / 32.1 lb/lbmole * 1lbmoleSO2/lbmoleS * 64.1 lb/lbmole * 1,893 MMscf/yr * 1,000,000 scf/MMscf = 9,903 lb/yr

PM_{10} (lb/yr) = PM_{10} (mg/Nm^3) * GT Exhaust Flow Rate (Nm^3/yr) * 1g/1,000 mg * 1 lb/453,59g
PM10 = 3.7 mg/Nm3 * 1,487,447,439 Nm3/yr * 1g/1,000mg * 1lb/453.59g = 12,133 lb/yr

HCHO (ppmvd) = HCHO (ppbvd @ 15% O2) * (20.9-O2 vol%/(1-H2O vol%/100))/(20.9-15) * 1 ppmvd/1,000 ppbvd
HCHO = 91 ppbvd @ 15%O2 * (20.9 - 12.3 / (1 - 7.9 / 100)) / (20.9 - 15) * 1 ppmvd/1,000 ppbvd = 0.1 ppmvd

HCHO (lb/yr) = GT Exhaust Flow Rate (lbmole/yr) * (1 - H_2O vol%/100) * HCHO (ppmvd) / 1,000,000 * MW_{HCHO} (lb/lbmole)
HCHO = 136,330,337 lbmole/yr * (1 - 7.9/100) * 0.1 ppmvd/1,000,000 * 30.0 lb/lbmole = 439 lb/yr

DB EMISSION RATES

NOx (lb/yr) = NOx (lb/MMBtu) (LHV) * DB Heat Input (LHV) (MMBtu/yr)
NOx = 0.02 lb/MMBtu (LHV) * 345,600 MMBtu/yr (LHV) = 6,912 lb/yr

CO (lb/yr) = CO (lb/MMBtu) (LHV) * DB Heat Input (LHV) (MMBtu/yr)
CO = 0.012 lb/MMBtu (LHV) * 345,600 MMBtu/yr (LHV) = 4,020 lb/yr

HOBBS 501F4 Annual Emission Rate (100% Load) Example Calculation
(Example calculations for Case 4 Fired unless otherwise noted)

VOC (lb/yr) = VOC (lb/MMBtu) (LHV) * DB Heat Input (LHV) (MMBtu/yr)
VOC = 0.0013 lb/MMBtu (LHV) * 345,600 MMBtu/yr (LHV) = 438 lb/yr

SO_2 (lb/yr) = Sulfur Content (grains/Hscf) * 1 Hscf/100scf * 1 lb_S/7,000 grains / MW_S (lb_S/$lbmole_S$) * 1$lbmole_{SO2}$/$lbmole_S$ * MW_{SO2} (lb_{SO2}/$lbmole_{SO2}$) * GT Fuel Flow Rate (MMScf/yr) * 1,000,000 scf/MMscf
SO2 = 1.8 grains/Hscf * 1Hscf/100scf * 1lb/7,000grains / 32.1 lb/lbmole * 1lbmoleSO2/lbmoleS * 64.1 lb/lbmole * 371 MMscf/yr * 1,000,000 scf/MMscf = 1,940 lb/yr

PM_{10} (lb/yr) = PM_{10} (lb/MMBtu) (LHV) * DB Heat Input (LHV) (MMBtu/yr)
PM10 = 0.0175 lb/MMBtu (LHV) * 345,600 MMBtu/yr (LHV) = 6,048 lb/yr

HCHO Emission Factor (lb/MMBtu) (HHV) = HCHO Emission Factor (lb/MMscf) (HHV) / 1,020 Btu/scf
HCHO Emission Factor = 7.50E-02 lb/MMscf (HHV) / 1,020 Btu/scf = 7.35E-05 lb/MMBtu (HHV)

HCHO (lb/yr) = HCHO (lb/MMBtu) (HHV) * DB Heat Input (HHV) (MMBtu/yr)
HCHO = 7.353E-05 lb/MMBtu (HHV) * 383,187 MMBtu/yr (HHV) = 28.2 lb/yr

STACK EXHAUST GAS
Fuel x, in CxHy = stoichiometric lbmoles of carbon in fuel
Fuel y, in Cx,Hy = stoichiometric lbmoles of hydrogen in fuel

DB Fuel Flow Rate (lbmole/yr) =DB Heat Input (HHV) (MMBtu/yr) * 1,000,000 Btu/MMBtu / Fuel Heat Content (HHV) (Btu/scf) / Standard Molar Volume (scf/lbmole)
DB Fuel Flow Rate = 383,187 MMBtu/hr * 1,000,000 Btu/MMBtu / 1,033 Btu/scf / 385.3 scf/lbmole = 962,712.8 lbmole/yr

O_2 Consumed at DB (lbmole/yr) = (Fuel x + Fuel y/4) * DB Fuel Flow Rate (lbmole/yr)
O2 Consumed at DB = (1.04 + 4.02 / 4) * 962,713 lbmole/yr = 1,963,401 lbmole/yr

CO_2 Produced at DB (lbmole/yr) = Fuel x * DB Fuel Flow Rate (lbmole/yr)
CO2 Produced at DB = 1.04 * 962,713 lbmole/hr = 996,423 lbmole/hr

H_2O Produced at DB (lbmole/yr) = Fuel y / 2 * DB Fuel Flow Rate (lbmole/yr)
H2O Produced at DB = 4.02 / 2 * 962,713 lbmole/hr = 1,933,956 lbmole/hr

Stack Exhaust O_2 (lbmole/yr) = GT Exhaust O_2 (lbmole/yr) - DB Consumed O_2 (lbmole/yr)
Stack Exahust O2 = 16,768,631 lbmole/yr - 1,963,401 lbmole/yr = 14,805,231 lbmole/yr

Stack Exhaust CO_2 (lbmole/yr) = GT Exhaust CO_2 (lbmole/yr) + DB Produced CO_2 (lbmole/yr)
Stack Exhaust CO2 = 5,453,213 lbmole/yr + 996,423 lbmole/yr = 6,449,636 lbmole/yr

Stack Exhaust H_2O (lbmole/yr) = GT Exhaust H_2O (lbmole/yr) + DB Produced H_2O (lbmole/yr)
Stack Exahust H2O = 10,770,097 lbmole/yr + 1,933,956 lbmole/yr = 12,704,053 lbmole/yr

Stack Exhaust N_2 (lbmole/yr) = GT Exhaust N_2 (lbmole/yr)
Stack Exhaust N2 = 102,111,422 lbmole/yr

Stack Exhaust Ar (lbmole/yr) = GT Exhaust Ar (lbmole/yr)
Stack Exhaust Ar = 1,226,973 lbmole/yr

Stack Exhaust Flow Rate (lbmole/yr) = Sum Stack Exhaust Pollutants Flow Rates (lbmole/yr)
Stack Exhaust Flow Rate = 14,805,231 lbmole/yr + 6,449,636 lbmole/yr + 12,704,053 lbmole/yr + 102,111,422 lbmole/yr + 1,226,973 lbmole/yr = 137,297,315 lbmole/yr

HOBBS 501F4 Annual Emission Rate (100% Load) Example Calculation
(Example calculations for Case 4 Fired unless otherwise noted)

Stack Exhaust i %vol = Stack Exhaust i (lbmole/yr) * 100 / Stack Exhaust Flow Rate (lbmole/yr)
Stack Exhaust O2 = 14,805,231 lbmole/yr * 100 /137,297,315 lbmole/yr = 10.8 %vol
Stack Exhaust CO2 = 6,449,636 lbmole/yr * 100 /137,297,315 lbmole/yr = 4.7 %vol
Stack Exhaust H2O = 12,704,053 lbmole/yr * 100 /137,297,315 lbmole/yr = 9.3 %vol
Stack Exhaust N2 = 102,111,422 lbmole/yr * 100 /137,297,315 lbmole/yr = 74.4 %vol
Stack Exhaust Ar = 1,226,973 lbmole/yr * 100 /137,297,315 lbmole/yr = 0.9 %vol

Molecular Weight (Stack Exhaust Gases) = Sum (%vol * MW)
Molecular Weight (GT Exhaust Gases) = 10.8% vol * 32.0 lb/lbmole + 4.7% vol * 44.0 lb/lbmole + 9.3% vol * 18.0 lb/lbmole + 74.4% vol * 28.0 lb/lbmole + 0.9% vol * 39.9 lb/lbmole = 28.4 lb/lbmole

NOx (pre-SCR as NO_2) (lb/yr) = GT NOx Exhaust (lb/yr) + DB NOx Exhaust (lb/yr)
NOx (pre-SCR as NO2) = 185,760.0 lb/yr + 6,912.0 lb/yr = 192,672 lb/yr

NOx (pre-SCR) (ppmvd) = NOx (pre-SCR as NO_2) (lb/yr) / (Stack Exhaust Flow Rate (lbmole/yr) * (1 - Stack Exhaust H_2O vol%/100) * 1/1,000,000 * MW_{NO2} (lb/lbmole))
NOx (pre-SCR) = 192,672 lb/yr /(137,297,315 lbmole/yr * (1 - 9.3 /100) * 1 / 1,000,000 * 46.0 lb/lbmole) = 33.6 ppmvd

NOx (pre-SCR) (ppmvd @ 15% O_2) = NOx (pre-SCR) (ppmvd) * (20.9 - 15) / (20.9 - Stack Exhaust O_2%/(1 - H_2O%/100))
NOx (pre-SCR) = 33.6 ppmvd * (20.9 - 15) / (20.9 - 10.8 / (1 - 9.3/100)) = 22.0 ppmvd @ 15% O2

NOx (pre-SCR as NO_2) (tpy) = NOx (pre-SCR as NO_2) (lb/yr) * 1 ton / 2,000 lb
NOx (pre-SCR as NO2) = 192,672 lb/yr * 1ton / 2,000 lb = 96.3 tpy

NOx (post-SCR) (ppmvd) = NOx (post-SCR) (ppmvd @ 15% O_2) * (20.9-O_2 vol%/(1-H_2O vol%/100))/(20.9-15)
NOx (post-SCR) = 2.0 ppmvd @ 15% O2 * (20.9 - 10.8 / (1 - 9.3/100)) / (20.9 - 15) = 3.1 ppmvd

NOx (post-SCR as NO_2) (lb/yr) = NOx (post-SCR) (ppmvd) * (1 - H_2O %vol/100) * Stack Exhaust Flow Rate (lbmole/yr) /1,000,000 * MW_{NO2} (lb/lbmole)
NOx (post-SCR as NO2) = 3.1 ppmvd * (1 - 9.3/100) * 137,297,315 lbmole/yr / 1,000,000 * 46.0 lb/lbmole = 17,521 lb/yr

NOx (post-SCR as NO_2) (tpy) = NOx (post-SCR as NO_2) (lb/yr) * 1 ton / 2,000 lb
NOx (post-SCR as NO2) = 17,521 lb/yr * 1ton / 2,000 lb = 8.8 tpy

CO (pre-Catalytic Oxidation) (lb/yr) = GT CO Exhaust (lb/yr) + DB CO Exhaust (lb/yr)
CO (pre-Catalytic Oxidation) = 68,040.0 lb/yr + 4,020.5 lb/yr = 72,060 lb/yr

CO (pre-Catalytic Oxidation) (ppmvd) = CO (pre-Catalytic Oxidation) (lb/yr) / (Stack Exhaust Flow Rate (lbmole/yr) * (1 - Stack Exhaust H_2O vol%/100) * 1/1,000,000 * MW_{CO} (lb/lbmole))
CO (pre-Catalytic Oxidation) = 72,060 lb/yr /(137,297,315 lbmole/yr * (1 - 9.3 /100) * 1 / 1,000,000 * 28.0 lb/lbmole) = 20.6 ppmvd

CO (pre-Catalytic Oxidation) (ppmvd @ 15% O_2) = CO (pre-Catalytic Oxidation) (ppmvd) * (20.9 - 15) / (20.9 - Stack Exhaust O_2%/(1 - H_2O%/100))
CO (pre-Catalytic Oxidation) = 20.6 ppmvd * (20.9 - 15) / (20.9 - 10.8 / (1 - 9.3/100)) = 13.5 ppmvd @ 15% O2

CO (pre-Catalytic Oxidation) (tpy) = CO (pre-Catalytic Oxidation) (lb/yr) * 1 ton / 2,000 lb
CO (pre-Catalytic Oxidation) = 72,060 lb/yr * 1ton / 2,000 lb = 36.0 tpy

CO (post-Catalytic Oxidation) (ppmvd) = CO (post-Catalytic Oxidation) (ppmvd @ 15% O_2) * (20.9-O_2 vol%/(1-H_2O vol%/100))/(20.9-15)
CO (post-Catalytic Oxidation) = 2.0 ppmvd @ 15% O2 * (20.9 - 10.8 / (1 - 9.3/100)) / (20.9 - 15) = 3.1 ppmvd

CO (post-Catalytic Oxidation) (lb/yr) = CO (post-Catalytic Oxidation) (ppmvd) * (1 - H_2O %vol/100) * Stack Exhaust Flow Rate (lbmole/yr) /1,000,000 * MW_{CO} (lb/lbmole)
CO (post-Catalytic Oxidation) = 3.1 ppmvd * (1 - 9.3/100) * 137,297,315 lbmole/yr / 1,000,000 * 28.0 lb/lbmole = 10,668 lb/yr

CO (post-Catalytic Oxidation) (tpy) = CO (post-Catalytic Oxidation) * 1 ton / 2,000 lb
CO (post-Catalytic Oxidation)= 10,668 lb/yr * 1ton / 2,000 lb = 5.3 tpy

HOBBS 501F4 Annual Emission Rate (100% Load) Example Calculation
(Example calculations for Case 4 Fired unless otherwise noted)

VOC (pre-Catalytic Oxidation) (lb/yr) = GT VOC Exhaust (lb/yr) + DB VOC Exhaust (lb/yr)
VOC (pre-Catalytic Oxidation) = 5,184.0 lb/yr + 437.8 lb/yr = 5,622 lb/yr

VOC (pre-Catalytic Oxidation) (ppmvd) = VOC (pre-Catalytic Oxidation) (lb/yr) / (Stack Exhaust Flow Rate (lbmole/yr) * (1 - Stack Exhaust H2O vol%/100) * 1/1,000,000 * MW_{VOC} (lb/lbmole))
VOC (pre-Catalytic Oxidation) = 5,622 lb/yr /(137,297,315 lbmole/yr * (1 - 9.3 /100) * 1 / 1,000,000 * 16.0 lb/lbmole) = 2.8 ppmvd

VOC (pre-Catalytic Oxidation) (ppmvd @ 15% O2) = VOC (pre-Catalytic Oxidation) (ppmvd) * (20.9 - 15) / (20.9 - Stack Exhaust O2%/(1 - H2O%/100))
VOC (pre-Catalytic Oxidation) = 2.8 ppmvd * (20.9 - 15) / (20.9 - 10.8 / (1 - 9.3/100)) = 1.8 ppmvd @ 15% O2

VOC (pre-Catalytic Oxidation) (tpy) = VOC (pre-Catalytic Oxidation) (lb/yr) * 1 ton / 2,000 lb
VOC (pre-Catalytic Oxidation) = 5,622 lb/yr * 1ton / 2,000 lb = 2.8 tpy

VOC (post-Catalytic Oxidation) (ppmvd) = VOC (post-Catalytic Oxidation) (ppmvd @ 15% O2) * (20.9-O2 vol%/(1-H2O vol%/100))/(20.9-15)
VOC (post-Catalytic Oxidation) = 0.6 ppmvd @ 15% O2 * (20.9 - 10.8 / (1 - 9.3/100)) / (20.9 - 15) = 0.9 ppmvd

VOC (post-Catalytic Oxidation) (lb/yr) = VOC (post-Catalytic Oxidation) (ppmvd) * (1 - H2O %vol/100) * Stack Exhaust Flow Rate (lbmole/yr) /1,000,000 * MWVOC (lb/lbmole)
VOC (post-Catalytic Oxidation) = 0.9 ppmvd * (1 - 9.3/100) * 137,297,315 lbmole/yr / 1,000,000 * 16.0 lb/lbmole = 1,833 lb/yr

VOC (post-Catalytic Oxidation) (tpy) = VOC (post-Catalytic Oxidation) * 1 ton / 2,000 lb
VOC (post-Catalytic Oxidation)= 1,833 lb/yr * 1ton / 2,000 lb = 0.9 tpy

SO_2 (lb/yr) = GT SO_2 Exhaust (lb/yr) + DB SO_2 Exhaust (lb/yr)
SO2 = 9,902.9 lb/yr + 1,940.1 lb/yr = 11,843 lb/yr

SO_2 (ppmvd) = SO_2 (lb/yr) / (Stack Exhaust Flow Rate (lbmole/yr) * (1 - Stack Exhaust H_2O vol%/100) * 1/1,000,000 * MW_{SO2} (lb/lbmole))
SO2 = 11,843 lb/yr /(137,297,315 lbmole/yr * (1 - 9.3 /100) * 1 / 1,000,000 * 64.1 lb/lbmole) = 1.5 ppmvd

SO_2 (ppmvd @ 15% O_2) = SO_2 (ppmvd) * (20.9 - 15) / (20.9 - Stack Exhaust O_2%/(1 - H_2O%/100))
SO2 = 1.5 ppmvd * (20.9 - 15) / (20.9 - 10.8 / (1 - 9.3/100)) = 1.0 ppmvd @ 15% O2

SO_2 (tpy) = SO_2 (lb/yr) * 1 ton / 2,000 lb
SO2= 11,843 lb/yr * 1ton / 2,000 lb = 5.9 tpy

PM_{10} (lb/yr) = GT PM_{10} Exhaust (lb/yr) + DB PM_{10} Exhaust (lb/yr)
PM10 = 12,133.3 lb/yr + 6,048.0 lb/yr = 18,181 lb/yr

PM_{10} (tpy) = PM_{10} (lb/yr) * 1 ton / 2,000 lb
PM10 = 18,181 lb/yr * 1ton / 2,000 lb = 9.1 tpy

NH_3 (ppmvd) = NH_3 (ppmvd @ 15% O2) * (20.9-O2 vol%/(1-H2O vol%/100))/(20.9-15)
NH3 = 10.0 ppmvd @ 15% O2 * (20.9 - 10.8 / (1 - 9.3/100)) / (20.9 - 15) = 15.3 ppmvd

NH_3 (lb/yr) = NH_3 (ppmvd) * (1 - H2O %vol/100) * Stack Exhaust Flow Rate (lbmole/yr) /1,000,000 * MW_{NH3} (lb/lbmole)
NH3 = 15.3 ppmvd * (1 - 9.3/100) * 137,297,315 lbmole/yr / 1,000,000 * 17.0 lb/lbmole = 32,428 lb/yr

NH_3 (tpy) = NH_3 (lb/yr) * 1 ton / 2,000 lb
NH3 = 32,428 lb/yr * 1ton / 2,000 lb = 16.2 tpy

HOBBS 501F4 Annual Emission Rate (100% Load) Example Calculation
(Example calculations for Case 4 Fired unless otherwise noted)

CO_2 (tpy) = CO_2 (lb/MMBtu) (HHV) * GT+DB Heat Input (MMBtu/yr) (HHV) * 1 ton / 2,000 lb
CO2 = 118.8 lb/MMBtu (HHV) * 2,339,067 MMBtu/yr (HHV) * 1 ton / 2,000 lb = 138,956 tpy

N_2O (tpy) = N_2O (lb/MMBtu) (HHV) * GT+DB Heat Input (MMBtu/yr) (HHV) * 1 ton / 2,000 lb
N2O = 2.2E-04 lb/MMBtu (HHV) * 2,339,067 MMBtu/yr (HHV) * 1 ton / 2,000 lb = 0.26 tpy

CH_4 (tpy) = CH_4 (lb/MMBtu) (HHV) * GT+DB Heat Input (MMBtu/yr) (HHV) * 1 ton / 2,000 lb
CH4 = 22.0E-04 lb/MMBtu (HHV) * 2,339,067 MMBtu/yr (HHV) * 1 ton / 2,000 lb = 2.58 tpy

Total GHG (tpy) = CO_2 (tpy) + N_2O (tpy) + CH_4 (tpy)
Total GHG = 138,956 tpy + 0.26 tpy + 2.58 tpy = 138,959 tpy

Total CO_2e (tpy) = CO_2 (tpy) * GWP_{CO2} + N_2O (tpy) * GWP_{N2O} + CH_4 (tpy) * GWP_{CH4}
Total GHG = 138,956 tpy * 1 + 0.26 tpy * 298 + 2.58 tpy * 25 = 139,098 tpy

HOBBS 501F4 Annual Emission Rate Calculation (100% Load) (8,290 hr/yr)

		Case 4 Unfired Winter Chillers Off	Case 4 Fired Winter Chillers Off	Case 5 Unfired Summer Chillers On	Case 5 Fired Summer Chillers On	Case 6 Unfired Summer Chillers Off	Case 6 Fired Summer Chillers Off
SITE CONDITIONS							
Ambient Temperature	ºF	30	30	95	95	95	95
Ambient Relative Humidity	%	20	20	95	95	20	20
Barometric Pressure	psia	12.83	12.83	12.83	12.83	12.83	12.83
Compressor Inlet Temperature	ºF	30	30	46	46	95	95
FACILITY CONDITIONS							
Annual Hours of Operation	hr/yr	1,268	1,080	1,490	1,269	1,719	1,464
GT Power Output	MW	180	180	172	172	141	141
GT Model		Hobbs 501F4	Hobbs 501F4	Hobbs 501F4	Hobbs 501F4	Hobbs 501F4	Hobbs 501F4
GT Load		Base	Base	Base	Base	Base	Base
Chillers	On/Off	Off	Off	**On**	**On**	Off	Off
GT Fuel Flow Rate	lb/hr	82,176	82,176	79,115	79,115	67,668	67,668
GT Heat Input (LHV)	MMBtu/hr	1,697	1,697	1,633	1,633	1,397	1,397
GT Heat Input (HHV)	MMBtu/hr	1,811	1,811	1,743	1,743	1,491	1,491
GT Heat Input (LHV)	MMBtu/yr	2,151,919	1,832,760	2,433,146	2,072,277	2,401,363	2,045,208
GT Heat Input (HHV)	MMBtu/yr	2,296,479	1,955,880	2,597,044	2,211,867	2,562,943	2,182,824
GT Fuel Flow Rate	MMscf/yr	2,223	1,893	2,514	2,141	2,481	2,113
DB Model		Forney	Forney	Forney	Forney	Forney	Forney
DB Status		Off	On	Off	On	Off	On
DB Heat Input (LHV)	MMBtu/yr	-	345,600	-	406,080	-	445,056
DB Heat Input (HHV)	MMBtu/yr	-	383,187	-	450,244	-	493,459
DB Fuel Flow Rate	MMscf/yr	-	371	-	436	-	478
GT+DB Heat Input (LHV)	MMBtu/yr	2,151,919	2,178,360	2,433,146	2,478,357	2,401,363	2,490,264
GT+DB Heat Input (HHV)	MMBtu/yr	2,296,479	2,339,067	2,597,044	2,662,111	2,562,943	2,676,283
FUEL ANALYSIS							
Fuel Type		PNG	PNG	PNG	PNG	PNG	PNG
Fuel Molecular Weight	lb/lbmole	17.29	17.29	17.29	17.29	17.29	17.29
Sulfur Content	grains/100scf	1.83	1.83	1.83	1.83	1.83	1.83
Fuel Heat Content (LHV)	Btu/scf	932	932	932	932	932	932
Fuel Heat Content (HHV)	Btu/scf	1,033	1,033	1,033	1,033	1,033	1,033
HHV/LHV Ratio		1.11	1.11	1.11	1.11	1.11	1.11
GT EXHAUST GAS ANALYSIS							
Oxygen, O2	%vol	12.30	12.30	12.11	12.11	12.50	12.50
Carbon Dioxide, CO2	%vol	4.00	4.00	3.90	3.90	3.80	3.80
Water, H2O	%vol	7.90	7.90	8.81	8.81	8.60	8.60
Nitrogen, N2	%vol	74.90	74.90	74.27	74.27	74.20	74.20
Argon, Ar	%vol	0.90	0.90	0.90	0.90	0.90	0.90
Total	%vol	100.00	100.00	100.00	100.00	100.00	100.00
Molecular Weight (GT Exhaust Gases)	lb/lbmole	28.46	28.46	28.35	28.35	28.37	28.37
GT Exhaust Temperature	ºF	1,145	1,145	1,156	1,156	1,168	1,168
GT Exhaust Flow Rate	lb/hr	3,592,532	3,592,532	3,467,318	3,467,318	3,113,817	3,113,817
GT Exhaust Flow Rate	lbmole/yr	160,071,051	136,330,337	182,255,581	155,224,599	188,694,570	160,708,598
GT Exhaust Flow Rate	MMscf/yr	61,676	52,529	70,224	59,809	72,705	61,922
GT Exhaust Flow Rate	Nm3/yr	1,746,473,167	1,487,447,439	1,988,519,970	1,693,595,409	2,058,773,278	1,753,429,196
GT Exhaust Oxygen, O2	lbmole/yr	19,688,739	16,768,631	22,075,000	18,800,977	23,586,821	20,088,575
GT Exhaust Carbon Dioxide, CO2	lbmole/yr	6,402,842	5,453,213	7,115,083	6,059,819	7,170,394	6,106,927
GT Exhaust Water, H2O	lbmole/yr	12,645,613	10,770,097	16,054,546	13,673,438	16,227,733	13,820,939
GT Exhaust Nitrogen, N2	lbmole/yr	119,893,217	102,111,422	135,369,010	115,291,945	140,011,371	119,245,780
GT Exhaust Argon, Ar	lbmole/yr	1,440,639	1,226,973	1,641,942	1,398,420	1,698,251	1,446,377

HOBBS 501F4 Annual Emission Rate Calculation (100% Load) (8,290 hr/yr)

		Case 4 Unfired Winter Chillers Off	Case 4 Fired Winter Chillers Off	Case 5 Unfired Summer Chillers On	Case 5 Fired Summer Chillers On	Case 6 Unfired Summer Chillers Off	Case 6 Fired Summer Chillers Off
GT EMISSION RATES							
NOx	ppmvd @ 15% O2	25	25	25	25	25	25
NOx	ppmvd	32	32	32	32	31	31
NOx (as NO2)	lb/hr	172	172	165	165	141	141
NOx (as NO2)	lb/yr	218,108	185,760	245,848	209,385	242,371	206,424
CO	ppmvd @ 15% O2	15	15	15	15	15	15
CO	ppmvd	19	19	19	19	18	18
CO	lb/hr	63	63	60	60	52	52
CO	lb/yr	79,889	68,040	89,399	76,140	89,385	76,128
VOC	ppmvd @ 15% O2	2.0	2.0	2.0	2.0	2.0	2.0
VOC	ppmvd	2.6	2.6	2.6	2.6	2.4	2.4
VOC (as CH4)	lb/hr	4.8	4.8	4.6	4.6	3.9	3.9
VOC (as CH4)	lb/yr	6,087	5,184	6,854	5,837	6,704	5,710
Sulfur Content	grains/100scf	1.8	1.8	1.8	1.8	1.8	1.8
SO2	lb/yr	11,627	9,903	13,149	11,199	12,977	11,052
PM10	mg/Nm3	3.70	3.70	3.70	3.70	3.70	3.70
PM10	lb/yr	14,246	12,133	16,221	13,815	16,794	14,303
Formaldehyde, HCHO	ppbvd @ 15% O2	91	91	91	91	91	91
Formaldehyde, HCHO	ppmvd	0.1	0.1	0.1	0.1	0.1	0.1
Formaldehyde, HCHO	lb/yr	515	439	586	499	577	491
DB EMISSION RATES							
NOx	lb/MMBtu (LHV)	0.02	0.02	0.02	0.02	0.02	0.02
NOx	lb/yr	-	6,912	-	8,122	-	8,901
CO	lb/MMBtu (LHV)	0.012	0.012	0.012	0.012	0.012	0.012
CO	lb/yr	-	4,020	-	4,724	-	5,177
VOC	lb/MMBtu (LHV)	0.0013	0.0013	0.0013	0.0013	0.0013	0.0013
VOC (as CH4)	lb/yr	-	438	-	514	-	564
Sulfur Content	grains/100scf	1.83	1.83	1.83	1.83	1.83	1.83
SO2	lb/yr	-	1,940	-	2,280	-	2,498
PM10	lb/MMBtu (LHV)	0.0175	0.0175	0.0175	0.0175	0.0175	0.0175
PM10	lb/yr	-	6,048	-	7,106	-	7,788
Formaldehyde, HCHO	lb/MMscf (HHV)	7.50E-02	7.50E-02	7.50E-02	7.50E-02	7.50E-02	7.50E-02
Formaldehyde, HCHO	lb/MMBtu (HHV)	7.35E-05	7.35E-05	7.35E-05	7.35E-05	7.35E-05	7.35E-05
Formaldehyde, HCHO	lb/yr	-	28.18	-	33.11	-	36.28
STACK EXHAUST GAS							
Fuel x, in CxHy		1.04	1.04	1.04	1.04	1.04	1.04
Fuel y, in Cx,Hy		4.02	4.02	4.02	4.02	4.02	4.02
DB Fuel Flow Rate	lbmole/yr	-	962,713	-	1,131,188	-	1,239,760
Oxygen Consumed at DB, O2	lbmole/yr	-	1,963,401	-	2,306,996	-	2,528,424
Carbon Dioxide Produced at DB, CO2	lbmole/yr	-	996,423	-	1,170,797	-	1,283,171
Water Produced at DB, H2O	lbmole/yr	-	1,933,956	-	2,272,399	-	2,490,506
Stack Exhaust Oxygen, O2	lbmole/yr	19,688,739	14,805,231	22,075,000	16,493,982	23,586,821	17,560,151
Stack Exhaust Carbon Dioxide, CO2	lbmole/yr	6,402,842	6,449,636	7,115,083	7,230,616	7,170,394	7,390,098
Stack Exhaust Water, H2O	lbmole/yr	12,645,613	12,704,053	16,054,546	15,945,837	16,227,733	16,311,445
Stack Exhaust Nitrogen, N2	lbmole/yr	119,893,217	102,111,422	135,369,010	115,291,945	140,011,371	119,245,780
Stack Exhaust Argon, Ar	lbmole/yr	1,440,639	1,226,973	1,641,942	1,398,420	1,698,251	1,446,377
Stack Exhaust Flow Rate	lbmole/yr	160,071,051	137,297,315	182,255,581	156,360,799	188,694,570	161,953,851
Stack Exhaust Oxygen, O2	%vol	12.3	10.8	12.1	10.5	12.5	10.8
Stack Exhaust Carbon Dioxide, CO2	%vol	4.0	4.7	3.9	4.6	3.8	4.6
Stack Exhaust Water, H2O	%vol	7.9	9.3	8.8	10.2	8.6	10.1
Stack Exhaust Nitrogen, N2	%vol	74.9	74.4	74.3	73.7	74.2	73.6
Stack Exhaust Argon, Ar	%vol	0.9	0.9	0.9	0.9	0.9	0.9
Stack Exhaust Flow Rate	%vol	100.0	100.0	100.0	100.0	100.0	100.0
Molecular Weight (Stack Exhaust Gases)	lb/lbmole	28.5	28.4	28.3	28.3	28.4	28.3

HOBBS 501F4 Annual Emission Rate Calculation (100% Load) (8,290 hr/yr)

		Case 4 Unfired Winter Chillers Off	Case 4 Fired Winter Chillers Off	Case 5 Unfired Summer Chillers On	Case 5 Fired Summer Chillers On	Case 6 Unfired Summer Chillers Off	Case 6 Fired Summer Chillers Off
STACK EMISSION RATES							
NOx (pre-SCR)	ppmvd @ 15% O2	25.1	22.0	24.9	21.7	24.9	21.4
NOx (pre-SCR)	ppmvd	32.2	33.6	32.2	33.7	30.5	32.1
NOx (pre-SCR as NO2)	lb/yr	218,108	192,672	245,848	217,507	242,371	215,325
NOx (pre-SCR as NO2)	tpy	109.1	96.3	122.9	108.8	121.2	107.7
NOx (post-SCR)	ppmvd @ 15% O2	2	2	2	2	2	2
NOx (post-SCR)	ppmvd	2.6	3.1	2.6	3.1	2.4	3.0
NOx (post-SCR as NO2)	lb/yr	17,347	17,521	19,745	20,044	19,430	20,085
NOx (post-SCR as NO2)	tpy	8.7	8.8	9.9	10.0	9.7	10.0
CO (pre-Catalytic Oxidation)	ppmvd @ 15% O2	15.1	13.5	14.9	13.3	15.1	13.3
CO (pre-Catalytic Oxidation)	ppmvd	19.3	20.6	19.2	20.6	18.5	19.9
CO (pre-Catalytic Oxidation)	lb/yr	79,889	72,060	89,399	80,864	89,385	81,305
CO (pre-Catalytic Oxidation)	tpy	39.9	36.0	44.7	40.4	44.7	40.7
CO (post-Catalytic Oxidation)	ppmvd @ 15% O2	2	2	2	2	2	2
CO (post-Catalytic Oxidation)	ppmvd	2.6	3.1	2.6	3.1	2.4	3.0
CO (post-Catalytic Oxidation)	lb/yr	10,562	10,668	12,022	12,204	11,830	12,229
CO (post-Catalytic Oxidation)	tpy	5.3	5.3	6.0	6.1	5.9	6.1
VOC (pre-Catalytic Oxidation)	ppmvd @ 15% O2	2.0	1.8	2.0	1.8	2.0	1.8
VOC (pre-Catalytic Oxidation)	ppmvd	2.57	2.81	2.6	2.8	2.4	2.7
VOC (pre-Catalytic Oxidation as CH4)	lb/yr	6,087	5,622	6,854	6,352	6,704	6,273
VOC (pre-Catalytic Oxidation as CH4)	tpy	3.0	2.8	3.4	3.2	3.4	3.1
VOC (post-Catalytic Oxidation)	ppmvd @ 15% O2	0.6	0.6	0.6	0.6	0.6	0.6
VOC (post-Catalytic Oxidation)	ppmvd	0.8	0.9	0.8	0.9	0.7	0.9
VOC (post-Catalytic Oxidation as CH4)	lb/yr	1,815	1,833	2,066	2,097	2,033	2,101
VOC (post-Catalytic Oxidation as CH4)	tpy	0.9	0.9	1.0	1.0	1.0	1.1
SO2	ppmvd @ 15% O2	0.96	0.97	0.96	0.97	0.96	0.97
SO2	ppmvd	1.23	1.48	1.23	1.50	1.17	1.45
SO2	lb/yr	11,627	11,843	13,149	13,479	12,977	13,550
SO2	tpy	5.8	5.9	6.6	6.7	6.5	6.8
PM10	lb/yr	14,246	18,181	16,221	20,921	16,794	22,091
PM10	tpy	7.1	9.1	8.1	10.5	8.4	11.0
HCHO	lb/yr	515	467	586	532	577	528
HCHO	tpy	0.3	0.2	0.3	0.3	0.3	0.3
NH3	ppmvd @ 15% O2	10	10	10	10	10	10
NH3	ppmvd	12.79	15.28	12.91	15.51	12.24	14.99
NH3	lb/yr	32,106	32,428	36,545	37,098	35,961	37,174
NH3	tpy	16.1	16.2	18.3	18.5	18.0	18.6
CO2	lb/MMBtu (HHV)	118.8	118.8	118.8	118.8	118.8	118.8
N2O	lb/MMBtu (HHV)	2.2E-04	2.2E-04	2.2E-04	2.2E-04	2.2E-04	2.2E-04
CH4	lb/MMBtu (HHV)	2.2E-03	2.2E-03	2.2E-03	2.2E-03	2.2E-03	2.2E-03
CO2	tpy	136,426	138,956	154,282	158,147	152,256	158,989
N2O	tpy	0.25	0.26	0.29	0.29	0.28	0.30
CH4	tpy	2.53	2.58	2.86	2.93	2.83	2.95
CO2 Global Warming Potential	-	1	1	1	1	1	1
N2O Global Warming Potential	-	298	298	298	298	298	298
CH4 Global Warming Potential	-	25	25	25	25	25	25
Total GHG	tpy	136,429	138,959	154,285	158,151	152,259	158,992
Total CO2e	tpy	136,565	139,098	154,439	158,308	152,411	159,151

Vendor Data

Process Input Data

HOBBS 501F4 Hourly GT Emission Rate Calculation (Reduced Load)

		75% CTG Load			50% CTG Load			40% CTG Load	20% CTG Load	1,800 rpm 0% CTG Load
SITE CONDITIONS										
Ambient Temperature	ºF	30	45	95	30	45	95	30	30	30
Ambient Relative Humidity	%	70	60	20	70	60	20	70	70	70
Barometric Pressure	psia	12.83	12.83	12.83	12.83	12.83	12.83	12.83	12.83	12.83
FACILITY CONDITIONS										
Plant Output	MW	124.71	118.66	97.92	82.53	78.52	64.80	65.70	31.72	-
Plant Heat Rate	Btu/kWh	9,905	10,027	10,545	11,308	11,447	12,039	12,245	17,504	-
GT Model		Hobbs 501F4	Hobbs 501F4	Hobbs 501F4	Hobbs 501F4	Hobbs 501F4	Hobbs 501F4	Hobbs 501F4	Hobbs 501F4	Hobbs 501F4
GT Load	%	75	75	75	50	50	50	40	20	-
Temperature at Catalyst	ºF	565	565	565	529	529	529	5	468	404
Chillers ON/OFF		Off	Off	Off	Off	Off	Off	Off	Off	Off
GT Heat Input	MMBtu/hr	1,235	1,190	1,033	933	899	780	804	555	301
GT Fuel Flow Rate	MMscf/hr	1.33	1.28	1.11	1.00	0.96	0.84	0.86	0.60	0.32
FUEL ANALYSIS										
Fuel Type		PNG	PNG	PNG	PNG	PNG	PNG	PNG	PNG	PNG
Fuel Molecular Weight	lb/lbmole	17.29	17.29	17.29	17.29	17.29	17.29	17.29	17.29	17.29
Sulfur Content	grains/100scf	1.83	1.83	1.83	1.83	1.83	1.83	1.83	1.83	1.83
Fuel Heat Content (LHV)	Btu/scf	932	932	932	932	932	932	932	932	932
Fuel Heat Content (HHV)	Btu/scf	1,033	1,033	1,033	1,033	1,033	1,033	1,033	1,033	1,033
HHV/LHV Ratio		1.11	1.11	1.11	1.11	1.11	1.11	1.11	1.11	1.11
GT EXHAUST GAS ANALYSIS										
Oxygen, O2	%vol	13.36	13.39	13.60	14.06	14.10	14.32	14.98	16.78	18.65
Carbon Dioxide, CO2	%vol	3.44	3.41	3.28	3.12	3.10	2.98	2.70	1.88	1.02
Water, H2O	%vol	7.13	7.28	7.54	6.51	6.65	6.88	5.70	4.09	2.43
Nitrogen, N2	%vol	75.13	74.97	74.64	75.36	75.20	74.87	75.67	76.30	76.93
Argon, Ar	%vol	0.94	0.93	0.93	0.94	0.93	0.93	0.95	0.96	0.97
Total	%vol	100	100	100	100	100	100	100	100	100
Molecular Weight (GT Exhaust Gases)	lb/lbmole	28.49	28.47	28.43	28.53	28.51	28.47	28.58	28.68	28.79
GT Exhaust Flow Rate	lb/hr	2,972,500	2,863,014	2,484,789	2,474,000	2,382,875	2,068,080	2,467,500	2,454,900	2,442,100
GT Exhaust Flow Rate	lbmole/hr	104,326	100,561	87,413	86,706	83,577	72,650	86,323	85,581	84,825
GT Exhaust Flow Rate	scf/hr	40,197,178	38,746,457	33,680,802	33,408,389	32,202,676	27,992,546	33,260,811	32,974,931	32,683,343
GT Exhaust Flow Rate	Nm3/hr	1,138,257	1,097,177	953,734	946,020	911,878	792,661	941,841	933,746	925,489
GT Exhaust Oxygen, O2	lbmole/hr	13,934	13,469	11,890	12,192	11,785	10,404	12,931	14,361	15,820
GT Exhaust Carbon Dioxide, CO2	lbmole/hr	3,586	3,426	2,864	2,710	2,588	2,163	2,332	1,606	866
GT Exhaust Water, H2O	lbmole/hr	7,441	7,323	6,588	5,644	5,554	4,997	4,917	3,502	2,060
GT Exhaust Nitrogen, N2	lbmole/hr	78,382	75,393	65,246	65,343	62,851	54,392	65,321	65,295	65,259
GT Exhaust Argon, Ar	lbmole/hr	982	939	815	817	781	678	822	817	819

HOBBS 501F4 Hourly GT Emission Rate Calculation (Reduced Load)

		75% CTG Load			50% CTG Load			40% CTG Load	20% CTG Load	1,800 rpm 0% CTG Load
GT EMISSIONS										
NOx (pre-SCR)	ppmvd @ 15% O2	25	25	25	40	40	40	70	70	80
NOx (pre-SCR)	ppmvd	27.6	27.4	26.2	39.7	39.3	37.4	59.5	40.4	24.2
NOx (pre-SCR as NO2)	lb/hr	123.1	117.3	97.5	148.1	141.0	116.5	222.8	152.5	92.2
CO (pre-Catalytic Oxidation)	ppmvd @ 15% O2	10	10	10	15	15	15	120	2,500	2,500
CO (pre-Catalytic Oxidation)	ppmvd	11	11	10	15	15	14	102	1,442	756
CO (pre-Catalytic Oxidation)	lb/hr	30	29	24	34	32	27	233	3,316	1,754
VOC (pre-Catalytic Oxidation)	ppmvd @ 15% O2	2.0	2.0	2.0	2.5	2.5	2.5	7.8	196	750
VOC (pre-Catalytic Oxidation)	ppmvd	2.2	2.2	2.1	2.5	2.5	2.3	6.6	113.1	226.9
VOC (pre-Catalytic Oxidation as CH4)	lb/hr	3.4	3.3	2.7	3.2	3.1	2.5	8.7	148.9	301.3
COLD STARTUP										
CO (post-Catalytic Oxidation)	ppmvd @ 15% O2	1.8	1.8	1.8	1.9	1.9	1.9	15.4	332.5	352.5
CO (post-Catalytic Oxidation)	ppmvd	2.0	2.0	1.9	1.9	1.9	1.8	13.1	191.8	106.7
CO (post-Catalytic Oxidation)	lb/hr	5.4	5.1	4.3	4.3	4.1	3.4	29.8	441.0	247.3
VOC (post-Catalytic Oxidation)	ppmvd @ 15% O2	0.7	0.7	0.7	0.9	0.9	0.9	2.7	68.6	300
VOC (post-Catalytic Oxidation)	ppmvd	0.8	0.8	0.7	0.9	0.9	0.8	2.3	39.6	90.8
VOC (post-Catalytic Oxidation as CH4)	lb/hr	1.2	1.1	1.0	1.2	1.1	0.9	3.0	52.1	120.5
WARM STARTUP										
CO (post-Catalytic Oxidation)	ppmvd @ 15% O2	1.8	1.8	1.8	1.9	1.9	1.9	15.2	322.5	340.0
CO (post-Catalytic Oxidation)	ppmvd	2.0	2.0	1.9	1.9	1.9	1.8	12.9	186.0	102.9
CO (post-Catalytic Oxidation)	lb/hr	5.4	5.1	4.3	4.3	4.1	3.4	29.5	427.7	238.5
VOC (post-Catalytic Oxidation)	ppmvd @ 15% O2	0.7	0.7	0.7	0.9	0.9	0.9	2.7	68.6	300
VOC (post-Catalytic Oxidation)	ppmvd	0.77	0.77	0.73	0.89	0.88	0.84	2.30	39.57	90.77
VOC (post-Catalytic Oxidation as CH4)	lb/hr	1.20	1.15	0.95	1.16	1.11	0.91	3.00	52.11	120.52
HOT STARTUP										
CO (post-Catalytic Oxidation)	ppmvd @ 15% O2	1.8	1.8	1.8	1.8	1.8	1.8	14.9	315.0	322.5
CO (post-Catalytic Oxidation)	ppmvd	2.0	2.0	1.9	1.8	1.8	1.7	12.7	181.7	97.6
CO (post-Catalytic Oxidation)	lb/hr	5.4	5.1	4.3	4.1	3.9	3.2	28.9	417.8	226.2
VOC (post-Catalytic Oxidation)	ppmvd @ 15% O2	0.7	0.7	0.7	0.9	0.9	0.9	2.7	68.6	300
VOC (post-Catalytic Oxidation)	ppmvd	0.77	0.77	0.73	0.89	0.88	0.84	2.30	39.57	90.77
VOC (post-Catalytic Oxidation as CH4)	lb/hr	1.20	1.15	0.95	1.16	1.11	0.91	3.00	52.11	120.52
SHUTDOWN										
CO (post-Catalytic Oxidation)	ppmvd @ 15% O2	1.7	1.7	1.7	1.7	1.7	1.7	13.9	285.0	285.0
CO (post-Catalytic Oxidation)	ppmvd	1.9	1.9	1.8	1.7	1.7	1.6	11.8	164.4	86.2
CO (post-Catalytic Oxidation)	lb/hr	5.1	4.9	4.0	3.8	3.6	3.0	26.9	378.0	199.9
VOC (post-Catalytic Oxidation)	ppmvd @ 15% O2	0.6	0.6	0.6	0.8	0.8	0.8	2.3	58.8	225
VOC (post-Catalytic Oxidation)	ppmvd	0.66	0.66	0.63	0.79	0.79	0.75	1.96	33.92	68.08
VOC (post-Catalytic Oxidation as CH4)	lb/hr	1.03	0.98	0.82	1.03	0.98	0.81	2.55	44.66	90.39
Sulfur Content	grains/100scf	1.8	1.8	1.8	1.8	1.8	1.8	1.8	1.8	1.8
SO2	lb/hr	6.93	6.68	5.80	5.24	5.05	4.38	4.52	3.12	1.69
PM10	mg/Nm3	3.70	3.70	3.70	3.70	3.70	3.70	3.70	3.70	3.70
PM10	lb/hr	9.28	8.95	7.78	7.72	7.44	6.47	7.68	7.62	7.55
NH3	ppmvd @ 15% O2	10	10	10	10	10	10	10	10	10
NH3	ppmvd	11.05	10.94	10.49	9.93	9.82	9.36	8.50	5.77	3.03
NH3	lb/hr	18.23	17.37	14.44	13.71	13.05	10.78	11.78	8.06	4.26

HOBBS 501F4 Hourly GT Emission Rate Calculation (Reduced Load)

		75% CTG Load			50% CTG Load			40% CTG Load	20% CTG Load	1,800 rpm 0% CTG Load
CO2	lb/MMBtu (HHV)	118.8	118.8	118.8	118.8	118.8	118.8	118.8	118.8	118.8
N2O	lb/MMBtu (HHV)	2.2E-04	2.2E-04	2.2E-04	2.2E-04	2.2E-04	2.2E-04	2.2E-04	2.2E-04	2.2E-04
CH4	lb/MMBtu (HHV)	2.2E-03	2.2E-03	2.2E-03	2.2E-03	2.2E-03	2.2E-03	2.2E-03	2.2E-03	2.2E-03
Operating Hours at Each Load%	hr/yr	30	30	30	46	46	46	91	212	91
CO2	tpy	2,196	2,115	1,835	2,574	2,479	2,152	4,333	6,992	1,627
N2O	tpy	0.0041	0.0039	0.0034	0.0048	0.0046	0.0040	0.0080	0.013	0.0030
CH4	tpy	0.041	0.039	0.034	0.048	0.046	0.040	0.080	0.13	0.030
CO2 Global Warming Potential	-	1	1	1	1	1	1	1	1	1
N2O Global Warming Potential	-	298	298	298	298	298	298	298	298	298
CH4 Global Warming Potential	-	25	25	25	25	25	25	25	25	25
Total GHG	tpy	2,196	2,115	1,835	2,574	2,479	2,152	4,333	6,992	1,627
Total CO2e	tpy	2,198	2,117	1,837	2,577	2,482	2,154	4,337	6,999	1,628

Vendor Data

Process Input Data

HOBBS CTG STARTUP & SHUTDOWN EMISSION RATE SUMMARY

CTG Startup & Shutdown Emission Rates per Unit

Air Pollutant	ppmvd @ 15% O_2 (1)	Max. Hourly (lb/hr) (2)	Annual (tpy) (3)
NOx	96	193.2	35.7
CO	3,000	441.0	106.4
VOC	900	77.8	42.6
SO_2	-	-	0.8
PM_{10}	-	-	1.8
NH_3	-	-	2.2
CO_2	-	-	17,721
N_2O	-	-	0.03
CH_4	-	-	0.33
GHG (4)	-	-	17,721
CO_2e (4)	-	-	17,739

Notes:

(1) Maximum exhaust concentration per vendor performance data at reduced loads, plus a 20% safety factor

(2) Proposed maximum hourly emissions represent the maxium 1-hr emission rates due to any startup or shutdown event.

- Data as provided by vendor
- Hourly SO_2, $PM_{10}/PM_{2.5}$ and NH_3 emission rates are expected to be within the routine operations limits, therefore no SU/SD Hourly emission rates are proposed for these pollutants.

(3) Annual emissions represent the sum of total proposed annual startups and shutdowns.

(4) GHG and CO_2e represent the sum of all CTG startup & shutdown at reduced load performance

GHG CTG startup & shutdown = 2,196 tpy + 2,574 tpy + 4,333 tpy + 6,992 tpy + 1,627 tpy = 17,721 tpy

Startup/Shutdown Events Characteristics

Air Pollutant	Cold Startup				Warm Startup				Hot Startup				Shutdown		
	Max. Emission Rate (lb/hr) (1)	Emission Factor (lb/event) (2)	Event Duration (min) (3)	No. Events per Year (3)	Max. Emission Rate (lb/hr) (1)	Emission Factor (lb/event) (2)	Event Duration (min) (3)	No. Events per Year (3)	Max. Emission Rate (lb/hr) (1)	Emission Factor (lb/event) (2)	Event Duration (min) (3)	No. Events per Year (3)	Emission Factor (lb/event) (2)	Event Duration (min) (3)	No. Events per Year (3)
NOx	169.5	453.0	180	60	164.4	289.8	120	70	193.2	240.0	90	50	66.7	25	180
CO	441.0	1,723			427.7	1,056			140.4	375			93		
VOC	71.8	494			77.8	405			61.0	311			65		
SO_2	4.4	10.2			4.2	6.8			4.9	5.9			1.6		
$PM_{10}/PM_{2.5}$	7.8	23.0			7.8	15.4			7.9	11.7			3.3		
NH_3	11.4	26.4			11.0	17.7			12.8	15.3			4.2		

Notes:

(1) Cold, warm and hot startup hourly mass emission rates (lb/hr) represent the worst 60 minute rolling period at reduced loads vendor performance data.

NOx (Cold SU) (0% to 20% load) = [17 min/event * 92.2 lb/hr + (60 - 17 min/event) * 152.5 lb/hr] * 1hr / 60 min = 135.1 lb/hr

NOx (Cold SU) (at 20% load) = 152.5 lb/hr

NOx (Cold SU) (20% to 40% load) = [14 min/event * 222.8 lb/hr + (60 - 14 min/event) * 152.5 lb/hr) * 1hr/60 min = 169.5 lb/hr

NOx (Cold SU) (20% to 50% load) = [14 min/event * 148.1 lb/hr + 14 min/event * 222.8 lb/hr + (60 - 14 min/event - 14 min/event) * 152.5 lb/hr) * 1hr/60 min = 168.4 lb/hr

NOx (Cold SU) (20% to 75% load) = [6 min/event * 123.1 lb/hr + 14 min/event * 148.1 lb/hr + 14 min/event * 222.8 lb/hr + (60 min/event - 6 min/event - 14 min/event - 14 min/event) * 152.5 lb/hr) * 1hr/60 min = 165.4 lb/hr

NOx (Cold SU) = Maximum 60-min rolling period = 169.5 lb/hr

(2) Emission factor (lb/event) represents the total mass emission during the event duration based on vendor performance data.

NOx, SO2, PM, NH3 (lb/event) = [(min/event * lb/hr) @ 0% Load + (min/event * lb/hr) @ 20% Load + (min/event * lb/hr) @ 40% Load + (min/event*lb/hr) @ 50% Load + (min/event * lb/hr) @ 75% Load] * 1hr / 60 minutes

CO, VOC (lb/event) as provided by vendor

NOx Cold SU = [17 min/event * 92.2 lb/hr + 128 min/event * 152.5 lb/hr + 14 min/event * 222.8 lb/hr + 14 min/event * 148.1 lb/hr + 6 min/event * 123.1 lb/hr] * 1hr/60 min = 453.0 lb/event

(3) Based on historical operational knowledge on startup and shutdown duration and frequency.

HOBBS CTG STARTUP & SHUTDOWN EMISSION RATE SUMMARY

Duration at Each Load Level

Mode	Duration per Load Level (min)					Total Startup Time (min)	No. of Startups (su/yr)	No. of Startups (hr/yr)
	75% CTG Load	50% CTG Load	40% CTG Load	20% CTG Load	0% CTG Load			
Cold Startup	6	14	14	128	17	180	60	180
Warm Startup	7	12	10	68	23	120	70	140
Hot Startup	9	11	39	3	28	90	50	75
Shutdown	2.55	3.06	10.71	0.77	7.91	25	180	75
					Total	**415**	**360**	**470**

Notes:

(1) Based on historical operational knowledge on startup duration and frequency.

Emission Rate at Each Load Level per Unit

COLD STARTUP

Air Pollutant	Units	75% CTG Load 586 F @ Catalyst		50% CTG Load 581 F @ Catalyst		40% CTG Load 559 F @ Catalyst		20% CTG Load 522 F @ Catalyst		0% CTG Load 491 F @ Catalyst	
		Pre Catalyst	Post Catalyst	Pre Catalyst	Post Catalyst	Pre Catalyst	Post Catalyst	Pre Catalyst	Post Catalyst	Pre Catalyst	Post Catalyst
NOx	ppmvd @ 15% O_2	25.0	-	40.0	-	70.0	-	70.0	-	80.0	-
	lb/hr	123.1	-	148.1	-	222.8	-	152.5	-	92.2	-
CO	ppmvd @ 15% O_2	10.0	1.8	15.0	1.9	120.0	15.4	2,500	332.5	2,500	352.5
	lb/hr	30.0	5.4	33.8	4.3	232.6	29.8	3,316	441.0	1,754	247.3
VOC	ppmvd @ 15% O_2	2.0	0.7	2.5	0.9	7.8	2.7	196.0	68.6	750.0	300.0
	lb/hr	3.4	1.2	3.2	1.2	8.7	3.0	148.9	52.1	301.3	120.5

Notes:

(1) During startup period the SCR will not be operational, while the oxidation catalyst will retain parcial oxidation capabilites.

(2) As calculated in Reduced Load CTG Hourly

WARM STARTUP

Air Pollutant	Units	75% CTG Load 586 F @ Catalyst		50% CTG Load 581 F @ Catalyst		40% CTG Load 559 F @ Catalyst		20% CTG Load 522 F @ Catalyst		0% CTG Load 491 F @ Catalyst	
		Pre Catalyst	Post Catalyst	Pre Catalyst	Post Catalyst	Pre Catalyst	Post Catalyst	Pre Catalyst	Post Catalyst	Pre Catalyst	Post Catalyst
NOx	ppmvd @ 15% O_2	25.0	-	40.0	-	70.0	-	70.0	-	80.0	-
	lb/hr	123.1	-	148.1	-	222.8	-	152.5	-	92.2	-
CO	ppmvd @ 15% O_2	10.0	1.8	15.0	1.9	120.0	15.2	2,500	322.5	2,500	340.0
	lb/hr	30.0	5.4	33.8	4.3	232.6	29.5	3,316	427.7	1,754	238.5
VOC	ppmvd @ 15% O_2	2.0	0.7	2.5	0.9	7.8	2.7	196.0	68.6	750.0	300.0
	lb/hr	3.4	1.2	3.2	1.2	8.7	3.0	148.9	52.1	301.3	120.5

Notes:

(1) During startup period the SCR will not be operational, while the oxidation catalyst will retain parcial oxidation capabilites.

(2) As calculated in Reduced Load CTG Hourly

HOBBS CTG STARTUP & SHUTDOWN EMISSION RATE SUMMARY

HOT STARTUP

Air Pollutant	Units	75% CTG Load 586 F @ Catalyst		50% CTG Load 581 F @ Catalyst		40% CTG Load 559 F @ Catalyst		20% CTG Load 522 F @ Catalyst		0% CTG Load 491 F @ Catalyst	
		Pre Catalyst	Post Catalyst	Pre Catalyst	Post Catalyst	Pre Catalyst	Post Catalyst	Pre Catalyst	Post Catalyst	Pre Catalyst	Post Catalyst
NOx	ppmvd @ 15% O_2	25.0	-	40.0	-	70.0	-	70.0	-	80.0	-
	lb/hr	123.1	-	148.1	-	222.8	-	152.5	-	92.2	-
CO	ppmvd @ 15% O_2	10.0	1.8	15.0	1.8	120.0	14.9	2,500	315.0	2,500	322.5
	lb/hr	30.0	5.4	33.8	4.1	232.6	28.9	3,316	417.8	1,754	226.2
VOC	ppmvd @ 15% O_2	2.0	0.7	2.5	0.9	7.8	2.7	196.0	68.6	750.0	300.0
	lb/hr	3.4	1.2	3.2	1.2	8.7	3.0	148.9	52.1	301.3	120.5

Notes:

(1) During startup period the SCR will not be operational, while the oxidation catalyst will retain parcial oxidation capabilites.

(2) As calculated in Reduced Load CTG Hourly

SHUTDOWN

Air Pollutant	Units	75% CTG Load		50% CTG Load		40% CTG Load		20% CTG Load		0% CTG Load	
		Pre Catalyst	Post Catalyst	Pre Catalyst	Post Catalyst	Pre Catalyst	Post Catalyst	Pre Catalyst	Post Catalyst	Pre Catalyst	Post Catalyst
NOx	ppmvd @ 15% O_2	25.0	-	40.0	-	70.0	-	70.0	-	80.0	-
	lb/hr	123.1	-	148.1	-	222.8	-	152.5	-	92.2	-
CO	ppmvd @ 15% O_2	10.0	1.7	15.0	1.7	120.0	13.9	2,500.0	285.0	2,500.0	285.0
	lb/hr	30.0	5.1	33.8	3.8	232.6	26.9	3,315.5	378.0	1,753.6	199.9
VOC	ppmvd @ 15% O_2	2.0	0.6	2.5	0.8	7.8	2.3	196.0	58.8	750.0	225.0
	lb/hr	3.4	1.0	3.2	1.0	8.7	2.6	148.9	44.7	301.3	90.4

Notes:

(1) During startup period the SCR will not be operational, while the oxidation catalyst will retain parcial oxidation capabilites.

(2) As calculated in Reduced Load CTG Hourly

STARTUP / SHUTDOWN

Air Pollutant	Units	75% CTG Load	50% CTG Load	40% CTG Load	20% CTG Load	0% CTG LoaD
SO_2	lb/hr	6.9	5.2	4.5	3.1	1.7
PM_{10}	lb/hr	9.3	7.7	7.7	7.6	7.5
NH_3	ppmvd @ 15% O_2	10.0	10.0	10.0	10.0	10.0
	lb/hr	18.2	13.7	11.8	8.1	4.3

Notes:

(1) As calculated in Reduced Load CTG Hourly

HOBBS 501F4 Hazardous Air Pollutants

HAPs Emission Rates Summary Table per Unit

Hazardous Air Pollutants (HAPs)	Max. Hourly Emission Rate (lb/hr)(1)	Annual Emission Rate (tpy)(2)
Formaldehyde	0.14	0.54
Hexane	0.21	0.34
Total HAPs	0.53	1.59

Notes:
(1) Max. Hourly Emission Rate (lb/hr) = CTG + HRSG DB Max. Hourly Emisison Rate (lb/hr) * (1 - Control Efficiency)
Oxidation Catalyst Reduction Control = 68% Sims Roy, Emission Standards Division (Docket A-95-51, December 30, 1990)

Formaldehyde Max. Hourly Emission Rate= 0.43 lb/hr * (1 - 0.68) = 0.14 lb/hr
(2) Annual Emission Rate (tpy) = CTG + HRSG DB Annual Emission Rate (tpy) * (1 - Control Efficiency)
Formaldehyde Annual Emission Rate = 1.69 tpy * (1 - 0.68) = 0.54 tpy

CTG + HRSG DB Speciated HAP Emission Rates per Unit

Hazardous Air Pollutants (HAPs)	Max. Hourly Emission Rate (lb/hr)(1)	Annual Emission Rate (tpy)(2)
1,3-Butadiene	< 7.89E-04	< 0.003
Acetaldehyde	0.07	0.28
Acrolein	0.01	0.04
Benzene	0.02	0.09
Dichlorobenzene	4.30E-04	7.04E-04
Ethylbenzene	0.06	0.22
Formaldehyde	**0.43**	**1.69**
Hexane	**0.65**	**1.06**
Naphthalene	0.003	0.01
PAHs	4.07E-03	0.02
Propylene Oxide	< 0.05	< 0.20
Toluene	0.24	0.91
Xylenes	0.12	0.45
Arsenic	7.17E-05	1.17E-04
Beryllium	< 4.30E-06	< 7.04E-06
Cadmium	3.95E-04	6.45E-04
Chromium	5.02E-04	8.21E-04
Cobalt	3.01E-05	4.93E-05
Manganese	1.36E-04	2.23E-04
Nickel	7.53E-04	0.001
Selenium	< 8.61E-06	< 1.41E-05

Notes:
(1) Max. Hourly Emssion Rate (lb/hr) = CTG Hourly Emission Rate (lb/hr) + DB Hourly Emission Rate (lb/hr)
Benzene Max. Hourly Emission Rate = 0.02 lb/hr + 7.53E-04 lb/hr = 0.02 lb/hr
(2) Annual Emission Rate (tpy) = CTG Annual Emission Rate (tpy) + DB Annual Emission Rate (tpy)
Benzene Annual Emission Rate = 0.08 tpy + 1.23E-03 tpy = 0.09 tpy

CTG HAPs Emission Rates per Unit

Hazardous Air Pollutants (HAPs)	Emission Factor (lb/MMBtu) (2)	Emission Factor (lb/MMBtu) (3)	Max. Hourly Emission Rate (lb/hr) (4)	Annual Emission Rate (tpy) (5)
1,3-Butadiene	< 4.30E-07	< 4.35E-07	< 0.001	< 0.003
Acetaldehyde	4.00E-05	4.05E-05	0.07	0.28
Acrolein	6.40E-06	6.48E-06	0.01	0.04
Benzene	1.20E-05	1.22E-05	0.02	0.08
Ethylbenzene	3.20E-05	3.24E-05	0.06	0.22
Formaldehyde(1)	-	-	-	-
Naphthalene	1.30E-06	1.32E-06	0.002	0.01
PAHs	2.20E-06	2.23E-06	0.00	0.02
Propylene Oxide	< 2.90E-05	< 2.94E-05	< 0.05	< 0.20
Toluene	1.30E-04	1.32E-04	0.24	0.91
Xylenes	6.40E-05	6.48E-05	0.12	0.45

GT Characteristics

		Mitsubishi 501F4
Fuel Heating Content (HHV)	Btu/scf	1,033
Max. GT Heat Rate (HHV) (6)	MMBtu/hr	1,811
Annual GT Heat Rate (HHV) (7)	MMBtu/yr	13,807,037

Notes:
(1) Formaldehyde: refer to combined cycle hourly and annual calculations.
(2) Emission factors as published by US EPA AP42, Chapter 3.1, Table 3.1-3 (April, 2000)
(3) Per AP 42 Chapter 3.1, Table 3.1-3 note c. Emission factors can be converted to actual natural gas heating values by multiplying the given emission factor by the ratio of the specified heating value to 1,020 Btu/scf.
(4) Max. Hourly Emission Rate (lb/hr) = Emission Factor (lb/MMBtu) * Max. GT Heat Rate (MMBtu/hr)
Max. Benzene Emission Rate = 1.22E-05 lb/MMBtu * 1,811 MMBtu/hr = 0.02 lb/hr
(5) Annual Emission Rate (tpy) = Emission Factor (lb/MMBtu) * Annual GT Heat Rate (MMBtu/hr) * GT Annual Hours of Operation (hr/yr) * 1ton/2,000lb
Annual. Benzene Emission Rate = 1.22E-05 lb/MMBtu * 13,807,037 MMBtu/yr * 1ton/2,000lb = 0.08 tpy
(6) Maximum Heat Rate for evaluated scenarios.
(7) Annual Heat Rate for evaluated scenarios.

HOBBS 501F4 Hazardous Air Pollutants

DB HAPs Emission Rates per Unit

Hazardous Air Pollutants (HAPs)	Emission Factor (lb/MMscf) (3)	Emission Factor (lb/MMscf) (4)	Max. Hourly Emission Rate (lb/hr) (5)	Annual Emission Rate (tpy) (6)
2-Methylnaphthalene(1)	2.40E-05	2.43E-05	8.61E-06	1.41E-05
3-Methylchloranthrene(1)	< 1.80E-06	< 1.82E-06	< 6.46E-07	1.06E-06
7,12-Dimethylbenz(a)anthracene(1)	1.60E-05	1.62E-05	5.74E-06	9.39E-06
Acenaphthene (1)	< 1.80E-06	< 1.82E-06	< 6.46E-07	1.06E-06
Acenaphthylene(1)	< 1.80E-06	< 1.82E-06	< 6.46E-07	1.06E-06
Anthracene (1)	< 2.40E-06	< 2.43E-06	< 8.61E-07	1.41E-06
Benz(a)anthracene (1)	< 1.80E-06	< 1.82E-06	< 6.46E-07	1.06E-06
Benzene	2.10E-03	2.13E-03	7.53E-04	1.23E-03
Benzo(a)pyrene (1)	< 1.20E-06	< 1.22E-06	< 4.30E-07	7.04E-07
Benzo(b)fluoranthene (1)	< 1.80E-06	< 1.82E-06	< 6.46E-07	1.06E-06
Benzo(g,h,i)perylene (1)	< 1.20E-06	< 1.22E-06	< 4.30E-07	7.04E-07
Benzo(k)fluoranthene (1)	< 1.80E-06	< 1.82E-06	< 6.46E-07	1.06E-06
Chrysene (1)	< 1.80E-06	< 1.82E-06	< 6.46E-07	1.06E-06
Dibenzo(a,h)anthracene(1)	< 1.20E-06	< 1.22E-06	< 4.30E-07	7.04E-07
Dichlorobenzene	1.20E-03	1.22E-03	4.30E-04	7.04E-04
Fluoranthene (1)	3.00E-06	3.04E-06	1.08E-06	1.76E-06
Fluorene (1)	2.80E-06	2.84E-06	1.00E-06	1.64E-06
Formaldehyde(2)	-	-	-	-
Hexane	1.80	1.82	0.65	1.06
Indeno(1,2,3-cd)pyrene (1)	< 1.80E-06	< 1.82E-06	< 6.46E-07	1.06E-06
Naphthalene	6.10E-04	6.18E-04	2.19E-04	3.58E-04
Phenanathrene (1)	1.70E-05	1.72E-05	6.10E-06	9.97E-06
Pyrene (1)	5.00E-06	5.06E-06	1.79E-06	2.93E-06
Toluene	3.40E-03	3.44E-03	1.22E-03	1.99E-03
Arsenic	2.00E-04	2.03E-04	7.17E-05	1.17E-04
Beryllium	< 1.20E-05	< 1.22E-05	< 4.30E-06	7.04E-06
Cadmium	1.10E-03	1.11E-03	3.95E-04	6.45E-04
Chromium	1.40E-03	1.42E-03	5.02E-04	8.21E-04
Cobalt	8.40E-05	8.51E-05	3.01E-05	4.93E-05
Manganese	3.80E-04	3.85E-04	1.36E-04	2.23E-04
Nickel	2.10E-03	2.13E-03	7.53E-04	1.23E-03
Selenium	< 2.40E-05	< 2.43E-05	< 8.61E-06	1.41E-05

DB Characteristics

		Forney
Fuel Heating Content (HHV)	Btu/scf	1,033
Max. DB Heat Rate (HHV) (7)	MMBtu/hr	366
Annual DB Heat Rate (HHV) (8)	MMBtu/yr	1,196,736

Notes:

(1) HAP because it is Polycyclic Aromatic Hydrocarbon (PAH).

(2) Formaldehyde: refer to combined cycle hourly and annual calculations.

(3) Emission factors as published by US EPA AP42, Chapter 1.4, Tables 1.4-3 and 1.4-4 (July 1998)

(4) Per AP 42 Chapter 1.4 Tables 1.4-3 and 1.4-4 emission factors are based on 1,020 Btu/scf heating value. Emissions factor have been adjusted to actual heat content by multiplying the given emission factor by the ratio of the specified heating value to 1,020 Btu/scf.

(5) Max. Hourly Emission Rate (lb/hr) = Emission Factor (lb/MMscf) * Max. DB Heat Rate (MMBtu/hr) / Fuel Heating Content (Btu/scf)
Max. DB Benzene Emission Rate = 2.13E-03 lb/MMscf * 366 MMBtu/hr / 1,033 Btu/scf = 7.53E-04 lb/hr

(6) Annual Em. Rate (tpy) = Em. Factor (lb/MMscf) * Annual DB Heat Rate (MMBtu/yr) / Fuel Heating Cont. (Btu/scf) * 1ton/2,000lb
Annual DB Benzene Emission Rate = 2.13E-03 lb/MMscf * 1,196,736 MMBtu/yr / 1,033 Btu/scf * 1ton/2,000lb = 1.23E-03 tpy

(7) Maximum Heat Rate for evaluated scenarios.

(8) Annual Heat Rate for evaluated scenarios.

HOBBS 501F4 Fuel Analysis

Natural Gas Fuel Analysis

Compound	Formula	MW (lb/lbmole)	Raw mol%	Normalized mol%	Weight %	Hydrocarbons	
						# C x mol%	#H y mol%
Helium	He	4.0	0.03	0.03	0.01	-	-
Hydrogen	H2	2.0	0.00	0.00	0.00	-	-
Oxygen/Argon	O2	32.0	0.01	0.01	0.03	-	-
Nitrogen	N2	28.0	2.18	2.18	3.54	-	-
Carbon Dioxide	CO2	44.0	0.43	0.43	1.10	-	-
Methane	CH4	16.0	91.73	91.77	85.16	0.92	3.67
Ethane	C2H6	30.1	5.21	5.21	9.06	0.10	0.31
Propane	C3H8	44.1	0.34	0.34	0.87	0.010	0.03
i-Butane	i-C4H10	58.1	0.02	0.02	0.06	0.001	0.002
n-Butante	n-C4H10	58.1	0.02	0.02	0.08	0.001	0.002
i-Pentane	i-C5H12	72.1	0.01	0.01	0.04	0.0004	0.001
n-Pentane	n-C5H12	72.1	0.00	0.00	0.02	0.0002	0.001
Hexanes+	n-C6H14	86.2	0.01	0.01	0.05	0.0006	0.001
	Total	**17.29**	**99.96**	**100.00**	**99.97**	**1.04**	**4.02**

Standard molar volume	379.5	scf/lbmole
Fuel MW	**17.29**	**lb/lbmole**
Fuel Heat Content (LHV)	**932**	**Btu/scf**
Fuel Heat Content (HHV)	**1,033**	**Btu/scf**
Fuel Heat Content (LHV)	20,450	Btu/lb
Fuel Heat Content (HHV)	22,674	Btu/lb
Fuel Sulfur (S) Content	0.0192	grains/100scf
Fuel Hydrogen Sulfide (H_2S) Content	0.0128	grains/100scf

* EMPACT Analytical Systems natural gas analysis conducted on July 9, 2013.
** EMPACT Analytical Systems sulfur content analysis conducted on August 16, 2013.

Mitsubishi Power Systems
Engineering Report PR-00631
Effective Date: 11/21/13
Revision: 1

Hobbs - ESTIMATED PERFORMANCE FOR REFERENCE ONLY M501F3 GAS TURBINE

NG Operation						
New and Clean	Hobbs 501F3			Hobbs 501F4		
Case	1	2	3	4	5	6
Combustion System						
Operating Condition						
Chiller	Off	On	Off	Off	On	Off
Ambient Temperature, F	30	95	95	30	95	95
Ambient Relative Humidity, %	20	95	20	20	95	20
Barometric Pressure (Psia)	12.83	12.83	12.83	12.83	12.83	12.83
Load	Base	Base	Base	Base	Base	Base
Compressor Inlet Temperature, F	30	46	95	30	46	95
IGV Angle, Deg	-4	-4	-4	-4	-4	-4
Fuel	NG	NG	NG	NG	NG	NG
Fuel Heating Value, Btu/lb LHV	20,645	20,645	20,645	20,645	20,645	20,645
Fuel Temperature, F Average	95	95	95	95	95	95
Static Inlet Loss, in-H2O	6.7	6.9	5.2	6.7	6.9	5.2
Total Inlet Loss, in-H2O	4.0	3.9	3.4	4.0	3.8	3.4
Static Exhaust Loss, in-H2O	20.3	19.1	15.9	20.7	19.5	16.0
Total Exhaust Loss, in-H2O	22.1	20.8	17.2	22.5	21.2	17.4
Injection Fluid	N/A	N/A	N/A	N/A	N/A	N/A
Gas Turbine Performance						
Gas Turbine Gross Output (MW)	170.9	162.5	135.4	180.3	171.7	140.8
Gross Heat Rate (Btu/kWh-LHV)	9,510	9,623	10,057	9,408	9,510	9,924
Fuel Flow (lb/hr)	78,711	75,764	65,981	82,176	79,115	67,668
Total Steam Flow (lb/hr)	0	0	0	0	0	0
Turbine Exhaust Flow (lb/hr)	3,553,467	3,429,695	3,081,356	3,592,532	3,467,318	3,113,817
Turbine Exhaust Temperature (F)	1,119	1,130	1,159	1,145	1,156	1,168
Heat Input LHV (mmBtu/hr)	1,625	1,564	1,362	1,697	1,633	1,397
Heat Input HHV (mmBtu/hr)	1,734	1,669	1,454	1,811	1,743	1,491
Exhaust Gas Composition, Vol%						
Oxygen	12.5	12.4	12.6	12.3	12.1	12.5
Carbon Dioxide	3.8	3.8	3.7	4.0	3.9	3.8
Water	7.7	8.6	8.5	7.9	8.8	8.6
Nitrogen	75.0	74.3	74.2	74.9	74.2	74.2
Argon	0.9	0.9	0.9	0.9	0.9	0.9
Exhaust Gas Composition, Wt%						
Oxygen	14.1	14.0	14.2	13.8	13.7	14.1
Carbon Dioxide	5.9	5.9	5.8	6.1	6.1	5.8
Water	4.9	5.5	5.4	5.0	5.6	5.5
Nitrogen	73.8	73.3	73.3	73.7	73.3	73.3
Argon	1.3	1.3	1.3	1.3	1.3	1.3
Emissions						
NOx, ppmvd @ 15% Oxygen	25	25	25	25	25	25
NOx, lb/hr	164	158	138	172	165	141
CO, ppmvd @ 15% Oxygen	15	15	15	15	15	15
CO, lb/hr	60	58	50	63	60	52
(VOC) Volatile Organic Compounds (as CH4), ppmvd @ 15% Oxygen	2.0	2.0	2.0	2.0	2.0	2.0
(VOC) Volatile Organic Compounds (as CH4), lb/hr	4.6	4.4	3.8	4.8	4.6	3.9
PM10, mg/Nm3	4.0	4.0	4.0	4.0	4.0	4.0
PM10, lb/hr	12.80	12.30	10.80	13.40	12.90	11.00

Notes:
* Based on new and clean condition. Degradation will increase amount of firing temperature derating.
If guarantees are required, margins or tolerances will be applied.

Estimated maximum fuel gas flow
Maximum fuel gas flow*: approx. 90,000 lb/hr
*At the condition of GT load limit.

Section 7
Information Used To Determine Emissions

Information Used to Determine Emissions shall include the following:

- ☒ If manufacturer data are used, include specifications for emissions units and control equipment, including control efficiencies specifications and sufficient engineering data for verification of control equipment operation, including design drawings, test reports, and design parameters that affect normal operation.
- ☐ If test data are used, include a copy of the complete test report. If the test data are for an emissions unit other than the one being permitted, the emission units must be identical. Test data may not be used if any difference in operating conditions of the unit being permitted and the unit represented in the test report significantly effect emission rates.
- ☐ If the most current copy of AP-42 is used, reference the section and date located at the bottom of the page. Include a copy of the page containing the emissions factors, and clearly mark the factors used in the calculations.
- ☐ If an older version of AP-42 is used, include a complete copy of the section.
- ☒ If an EPA document or other material is referenced, include a complete copy.
- ☒ Fuel specifications sheet.
- ☐ If computer models are used to estimate emissions, include an input summary (if available) and a detailed report, and a disk containing the input file(s) used to run the model. For tank-flashing emissions, include a discussion of the method used to estimate tank-flashing emissions, relative thresholds (i.e., permit or major source (NSPS, PSD or Title V)), accuracy of the model, the input and output from simulation models and software, all calculations, documentation of any assumptions used, descriptions of sampling methods and conditions, copies of any lab sample analysis.

The following information was used to determine the CTG/HRSG emission rates post-upgrade. All relevant documentation is included. The detailed emission rate calculations are provided in **Section 6** and **UA2 Form**. The information is as follows:

- Mitsubishi CTG performance data. Mitsubishi Power Systems Engineering Report PR-00631. Effective date 11/21/13. Revision 1.
- CMI Energy LLC, CTG reduced load performance data.
- Pipeline natural gas fuel analysis. EMPACT Analytical Systems Inc. 2013 Fuel Analysis.
- Formaldehyde emission factor as published by 40 CFR 63, Subpart YYYY Table 1 (§63.6100).
- HAPs turbine emission factors as published by U.S. EPA AP-42 Chapter 3.1, Table 3.1-3 (April, 2000).
- HAPs emission control percentage as published in the December 30, 1990 Memorandum "Hazardous Air Pollutant (HAP) Emission Control Technology for New Stationary Combustion Turbines", Sims Roy, Emission Standards Division, Combustion Group (Docket A-95-51).
- HAPs duct burner emission factors as published by U.S. EPA AP-42 Chapter 1.4, Tables 1.4-3 and 1.4-4 (July 1998).
- 40 CFR Part 75, Appendix G, Equation G-4 (§98.43(a)), CO_2 emission factor. 40 CFR 98, Subpart C, Table C-2, CH4 and N2O emission factors.
- 40 CFR 98, Subpart A, Table A-1, Global Warming Potential.

Section 8
Map(s)

A map such as a 7.5 minute topographic quadrangle showing the exact location of the source. The map shall also include the following:

The UTM or Longitudinal coordinate system on both axes	An indicator showing which direction is north
A minimum radius around the plant of 0.8km (0.5 miles)	Access and haul roads
Topographic features of the area	Facility property boundaries
The name of the map	The area which will be restricted to public access
A graphical scale	

An area map of the facility is attached.

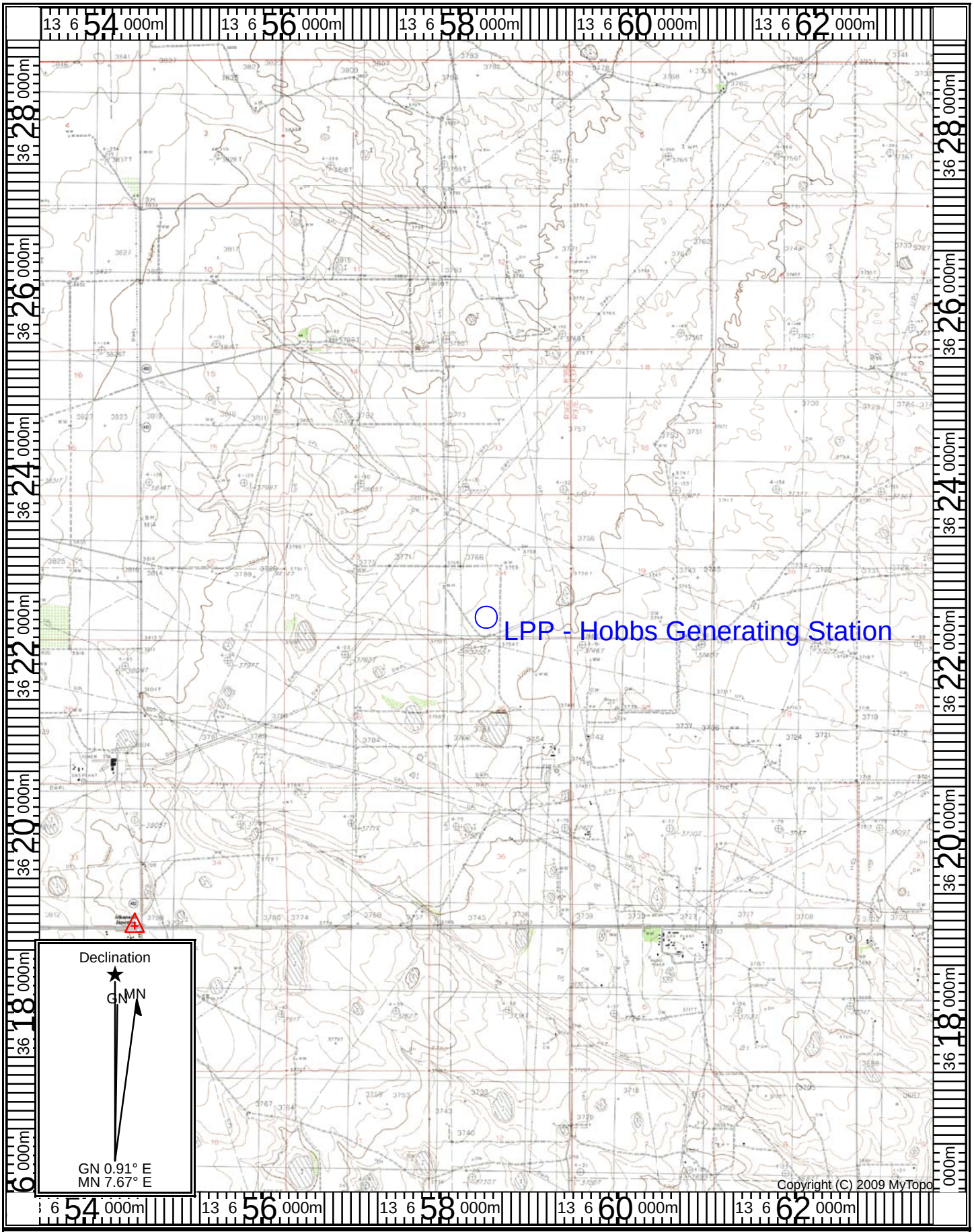

Map Name: MONUMENT NORTH
Print Date: 03/06/12

Scale: 1 inch = 4,761 ft.
Map Center: 13 0658413 E 3622424 N

Horizontal Datum: WGS84

Section 9
Proof of Public Notice

(for NSR applications submitting under 20.2.72 or 20.2.74 NMAC)
(This proof is required by: 20.2.72.203.A.14 NMAC "Documentary Proof of applicant's public notice")

☒ **I have read the AQB "Guidelines for Public Notification for Air Quality Permit Applications"**
This document provides detailed instructions about public notice requirements for various permitting actions. It also provides public notice examples and certification forms. Material mistakes in the public notice will require a re-notice before issuance of the permit.

Unless otherwise allowed elsewhere in this document, the following items document proof of the applicant's Public Notification. Please include this page in your proof of public notice submittal with checkmarks indicating which documents are being submitted with the application.

New Permit and **Significant Permit Revision** public notices must include all items in this list.

Technical Revision public notices require only items 1, 5, 9, and 10.

Per the Guidelines for Public Notification document mentioned above, include:

1. ☒ A copy of the certified letter receipts with post marks (20.2.72.203.B NMAC)
2. ☒ A list of the places where the public notice has been posted in at least four publicly accessible and conspicuous places, including the proposed or existing facility entrance. (e.g: post office, library, grocery, etc.)
3. ☒ A copy of the property tax record (20.2.72.203.B NMAC).
4. ☒ A sample of the letters sent to the owners of record.
5. ☒ A sample of the letters sent to counties, municipalities, and Indian tribes.
6. ☒ A sample of the public notice posted and a verification of the local postings.
7. ☒ A table of the noticed citizens, counties, municipalities and tribes and to whom the notices were sent in each group.
8. ☒ A copy of the public service announcement (PSA) sent to a local radio station and documentary proof of submittal.
9. ☒ A copy of the classified or legal ad including the page header (date and newspaper title) or its affidavit of publication stating the ad date, and a copy of the ad. When appropriate, this ad shall be printed in both English and Spanish.
10. ☒ A copy of the display ad including the page header (date and newspaper title) or its affidavit of publication stating the ad date, and a copy of the ad. When appropriate, this ad shall be printed in both English and Spanish.
11. ☒ A map with a graphic scale showing the facility boundary and the surrounding area in which owners of record were notified by mail. This is necessary for verification that the correct facility boundary was used in determining distance for notifying land owners of record.

Proof of public notice is included in the following pages.

Delivery Confirmations of Certified Letters

CAMS
Consolidated Asset Management Services
9 Milam St., Ste 2300 • Houston, Texas 77002

7012 2210 0002 3756 9748

Snyder Ranches, Inc.
PO BOX 2158
Hobbs, NM 88241

USPS Tracking™

Tracking Number: 70122210000237569748

Product & Tracking Information

Postal Product:

Features:
Certified Mail™

DATE & TIME	STATUS OF ITEM	LOCATION
February 27, 2014 , 1:51 pm	**Delivered**	**HOBBS, NM 88240**
February 26, 2014 , 11:28 pm	Processed through USPS Sort Facility	LUBBOCK, TX 79402
February 26, 2014	Depart USPS Sort Facility	LUBBOCK, TX 79402
February 26, 2014	Depart USPS Sort Facility	NORTH HOUSTON, TX 77315
February 26, 2014 , 12:27 am	Processed through USPS Sort Facility	NORTH HOUSTON, TX 77315

BAMS
solidated Asset Management Services
ilam St., Ste 2300 ▪ Houston, Texas 77002

7012 2210 0002 3756 9755

Southwestern Public Service Company
Property Tax Department
PO BOX 840
Denver, CO 80201-0840

USPS Tracking™

Tracking Number: 70122210000237569755

Product & Tracking Information

Postal Product:

Features:
Certified Mail™

DATE & TIME	STATUS OF ITEM	LOCATION
February 28, 2014 , 7:12 am	**Delivered**	**DENVER, CO 80201**
February 28, 2014	Depart USPS Sort Facility	DENVER, CO 80266
February 28, 2014 , 12:16 am	Processed through USPS Sort Facility	DENVER, CO 80266
February 27, 2014 , 1:05 pm	Processed through USPS Sort Facility	DENVER, CO 80266
February 26, 2014	Depart USPS Sort Facility	NORTH HOUSTON, TX 77315
February 25, 2014 , 11:35 pm	Processed through USPS Sort Facility	NORTH HOUSTON, TX 77315

CAMS
Consolidated Asset Management Services
Milam St., Ste 2300 • Houston, Texas 77002

7012 2210 0002 3756 9731

Randy and Naomi Smith
PO BOX 633
Carlsbad, NM 88221-0633

USPS Tracking™

Tracking Number: 70122210000237569731

Product & Tracking Information

Postal Product:

Features:
Certified Mail™

DATE & TIME	STATUS OF ITEM	LOCATION
February 27, 2014 , 8:49 am	**Sorting Complete**	**CARLSBAD, NM 88220**
February 27, 2014 , 8:35 am	Available for Pickup	CARLSBAD, NM 88220
February 27, 2014 , 7:36 am	Arrival at Unit	CARLSBAD, NM 88220
February 26, 2014 , 11:26 pm	Processed through USPS Sort Facility	LUBBOCK, TX 79402
February 26, 2014	Depart USPS Sort Facility	LUBBOCK, TX 79402
February 26, 2014	Depart USPS Sort Facility	NORTH HOUSTON, TX 77315
February 26, 2014 , 12:27 am	Processed through USPS Sort Facility	NORTH HOUSTON, TX 77315

CAMS
onsolidated Asset Management Services
Milam St., Ste 2300 • Houston, Texas 77002

7012 2210 0002 3756 9724

Mike Gallagher, Lea County Manager
100 North Main Suite 4
Lovington, NM 88260
Attn: Sandrea Stout-Brito

USPS Tracking™

Tracking Number: 70122210000237569724

Product & Tracking Information

Postal Product:

Features:
Certified Mail™

DATE & TIME	STATUS OF ITEM	LOCATION
February 27, 2014 , 9:42 am	**Delivered**	**LOVINGTON, NM 88260**
February 27, 2014 , 8:05 am	Arrival at Unit	LOVINGTON, NM 88260
February 26, 2014 , 11:28 pm	Processed through USPS Sort Facility	LUBBOCK, TX 79402
February 26, 2014	Depart USPS Sort Facility	LUBBOCK, TX 79402
February 26, 2014	Depart USPS Sort Facility	NORTH HOUSTON, TX 77315
February 25, 2014 , 11:38 pm	Processed through USPS Sort Facility	NORTH HOUSTON, TX 77315

CAMS
nsolidated Asset Management Services
Milam St., Ste 2300 • Houston, Texas 77002

7012 2210 0002 3756 9687

Carlin Properties, LLC
PO BOX 188
Monument, NM 88265-0188

USPS Tracking™

Tracking Number: 70122210000237569687

Product & Tracking Information

Postal Product:

Features:
Certified Mail™

DATE & TIME	STATUS OF ITEM	LOCATION
March 1, 2014 , 11:27 am	**Delivered**	**MONUMENT, NM 88265**
February 27, 2014 , 11:41 am	Available for Pickup	MONUMENT, NM 88265
February 27, 2014 , 11:41 am	Arrival at Unit	HOBBS, NM 88240
February 26, 2014 , 11:47 pm	Processed through USPS Sort Facility	LUBBOCK, TX 79402
February 26, 2014	Depart USPS Sort Facility	LUBBOCK, TX 79402
February 26, 2014	Depart USPS Sort Facility	NORTH HOUSTON, TX 77315
February 25, 2014 , 11:35 pm	Processed through USPS Sort Facility	NORTH HOUSTON, TX 77315

CAMS
Consolidated Asset Management Services
9 Milam St., Ste 2300 • Houston, Texas 77002

7012 2210 0002 3756 9694

Risk Manager, City of Hobbs
200 E. Broadway
Hobbs, NM 88240
Attn: Ann Betzen

USPS Tracking™

Tracking Number: 70122210000237569694

Product & Tracking Information

Postal Product:

Features:
Certified Mail™

DATE & TIME	STATUS OF ITEM	LOCATION
February 27, 2014 , 12:22 pm	**Delivered**	**HOBBS, NM 88240**
February 26, 2014 , 11:38 pm	Processed through USPS Sort Facility	LUBBOCK, TX 79402
February 26, 2014	Depart USPS Sort Facility	LUBBOCK, TX 79402
February 26, 2014	Depart USPS Sort Facility	NORTH HOUSTON, TX 77315
February 25, 2014 , 11:35 pm	Processed through USPS Sort Facility	NORTH HOUSTON, TX 77315

CAMS
nsolidated Asset Management Services
vilam St., Ste 2300 ▪ Houston, Texas 77002

7012 2210 0002 3756 9700

El Paso Natural Gas Company
PO BOX 4372
Houston, TX 77210

USPS Tracking™

Tracking Number: 70122210000237569700

Product & Tracking Information

Postal Product:

Features:
Certified Mail™

DATE & TIME	STATUS OF ITEM	LOCATION
February 26, 2014 , 8:06 am	**Delivered**	**HOUSTON, TX 77210**
February 26, 2014	Depart USPS Sort Facility	HOUSTON, TX 77201
February 26, 2014 , 4:25 am	Processed through USPS Sort Facility	HOUSTON, TX 77201
February 26, 2014	Depart USPS Sort Facility	NORTH HOUSTON, TX 77315
February 25, 2014 , 11:04 pm	Processed through USPS Sort Facility	NORTH HOUSTON, TX 77315

CAMS
nsolidated Asset Management Services
Vilam St., Ste 2300 ▪ Houston, Texas 77002

7012 2210 0002 3756 9717

International Isotopes, Inc
100 N Main, Suite 4
Lovington, NM 88260

USPS Tracking™

Tracking Number: 70122210000237569717

Product & Tracking Information

Postal Product:

Features:
Certified Mail™

DATE & TIME	STATUS OF ITEM	LOCATION
February 27, 2014 , 9:42 am	**Delivered**	**LOVINGTON, NM 88260**
February 27, 2014 , 8:05 am	Arrival at Unit	LOVINGTON, NM 88260
February 26, 2014 , 11:28 pm	Processed through USPS Sort Facility	LUBBOCK, TX 79402
February 26, 2014	Depart USPS Sort Facility	LUBBOCK, TX 79402
February 26, 2014	Depart USPS Sort Facility	NORTH HOUSTON, TX 77315
February 26, 2014 , 12:27 am	Processed through USPS Sort Facility	NORTH HOUSTON, TX 77315

CAMS
olidated Asset Management Services
am St., Ste 2300 ▲ Houston, Texas 77002

7012 2210 0002 3756 9786

New Mexico State Land Office
PO BOX 1148
Santa Fe, NM 87504

Tracking Number: 70122210000237569786

Product & Tracking Information

Postal Product:

Features:
Certified Mail™

DATE & TIME	STATUS OF ITEM	LOCATION
February 28, 2014 , 11:29 pm	**Processed through USPS Sort Facility**	**ALBUQUERQUE, NM 87101**
February 28, 2014	Depart USPS Sort Facility	ALBUQUERQUE, NM 87101
February 27, 2014	Depart USPS Sort Facility	NORTH HOUSTON, TX 77315
February 26, 2014 , 10:07 pm	Processed through USPS Sort Facility	NORTH HOUSTON, TX 77315

New Mexico Bureau of Land Management

7012 2210 0002 3756 9793

U.S. Postal Service™
CERTIFIED MAIL™ RECEIPT
(Domestic Mail Only; No Insurance Coverage Provided)

For delivery information visit our website at www.usps.com®

OFFICIAL USE

Postage	$
Certified Fee	
Return Receipt Fee (Endorsement Required)	
Restricted Delivery Fee (Endorsement Required)	
Total Postage & Fees	$

Postmark Here

D. Baugh
2/27/14

Sent To Lea Power Partners
Street, Apt. No.; or PO Box No. Bureau of Land
City, State, ZIP+4 Management

PS Form 3800, August 2006 See Reverse for Instructions

The public notices were posted in the following four publicly accessible and conspicuous places:

- Hobbs City Hall
- Hobbs Public Library
- Hobbs Power Station
- Online Hobbs Community Bulletin Board of Hobbs City Hall (www.hobbsnm.org/buletin_board.html)

Copy of Property Tax Record Documents (I)

DONNA DUNCAN

LEA COUNTY TREASURER

(575) 396-8643
Fax (575) 396-6826
Email: dduncan@leacounty.net

100 N. Main, Suite 30
Lovington, NM 88260

October 26, 2011

Certified Mail No. 70053110000390561793/Return Receipt Requested

Lea Power Partners LLC
98 N Twombly Lane
Hobbs, NM 88242

Re Tax Statement No. 2011-17453

Gentlemen

Concerning Lea County Tax Statement No. 2011-17453 (copy enclosed) which showed an incorrect tax amount due. Due to the limitations of the billing system, the bill did not take into account the provisions of Lea County Resolution No. 08-Aug-037R, a copy of which is attached for your reference.

According to my calculations, the first half tax amount due will be reduced by $147,222.22 leaving a first half tax balance due in the amount of $948,944.45. Payment of the first half tax must be made by December 10, 2011, to avoid penalty and interest. The second half tax will also be reduced by $147,222.22 leaving a second half tax balance due in the amount of $948,944.45. Payment of the second half tax must be made by May 10, 2012.

This is the only notice you will receive concerning your 2011 tax payments. No second half notice will be sent. If you have any questions, please call.

Very truly yours

Donna Duncan

DONNA DUNCAN
Lea County Treasurer

Copy to: Lea County Manager
Dee Robinson, Lea County Assessor

Copy of Property Tax Record Documents (II)

2011 TAX BILL

Remit to: DONNA DUNCAN
Lea County Treasurer
100 N Main Ave Suite 3C
Lovington NM 88260-4000
(575) 396-8643

BILL NO.: 2011-0017453 OWNER NO.: 0205769

DISTRIBUTION	TAXABLE VALUE	TAX RATES	AMOUNT DUE
STATE -N/R	83333333	1.362	113500.00
COUNTY -N/R	83333333	10.600	883333.33
SCHOOL -N/R	83333333	9.346	778833.34
NON-RES SUBTOTAL	83333333	21.308	1775666.67
JUNIOR COLLEGE	83333333	5.000	416666.67
		TOTAL	2192333.34

School District: 160

PROPERTY DESCRIPTION

PROPERTY # 4 000 407 020 001
SECTION-23 TOWNSHIP-18S RANGE-36E
160.00 AC BEING S2NE4, N2SE4
CAB# 220-019 UNPROTESED VALUE
7/16/07-SMITH, RANDY D PRT #40702
2007-LEA POWER PARTNERS (INCORRECT)
SW4 SEC 24 CHANGED SUBSEQUENT
FOR 2007 & CORRECTED FOR 2008
B-1486 P-636
PROPERTY # 4 971 119 095 721
SECTION-24 TOWNSHIP-18S RANGE-36E
153.03 AC BEING SW4
"LESS TR BEG S50D21'38"E 420.10'
FROM NE COR SW4 SEC 24, TH
S00D28'E 510', S89D32'W 595',
N00D28'W 510', N89D32'E 595'
TO BEG (6.97 AC)
12/19/06-SMITH, RANDY D PRT #40702
B-1486 P-636
2007-WAS ALL LEA POWER PARTNERS
(INCORRECT) SUBSEQUENT FOR 2007
6/27/07-REDESCRIBED PRT TO #90111
SOUTHWESTERN PUBLIC SERVICE CO
(6.97 AC) B-1520 P-994

DESCRIPTION	TAXABLE VALUE	TOTAL TAXABLE VALUE
CENTRAL	249999999	83333333
NET		83333333
TOTAL NET VALUE		83333333

Your mortgage company may be paying this bill:
However, it is the responsibility of the property owner to ensure property taxes are paid. Owners with mortgages should contact lender to determine responsibility for payment of tax. First half payment or payment in full will be delinquent after December 10. Second half payment will be delinquent after May 10.
THIS IS THE ONLY NOTICE YOU WILL RECEIVE FOR BOTH INSTALLMENTS OF TAX.
Your canceled check is your receipt unless you provide a self-addressed, stamped envelope.
(You may pay online at www.leacounty.net or call 1-575-396-8643, Visa, MasterCard, Discover & Amex.)

YEAR	BILL NO.	TAX	INTEREST	PENALTY	LATE	AMOUNT DUE

PRIOR TAXES, IF ANY, MUST BE PAID BEFORE ACCEPTING CURRENT YEAR PAYMENT.

Tax Rates are expressed in Dollars per Thousand. Taxable Value is 33 1/3% of Full Value.

Copy of Property Tax Record Documents (III)

LEA COUNTY TREASURER — 2011 SCHEDULE TAXABLE VALUE IS 33.1732% OF FULL VALUE — PAGE 4077

NAME AND ADDRESS		QUANTITY	FULL VALUE	TAXABLE VALUE		VALUE	TAX RATE	TAXES	
OWNER-0090424 LEA PARTNERS PO BOI 4967 HOUSTON TX 77210 4967	DISTRICT-081	N/R-LAND	1749	583	STATE	583	1.362	0.79	BILL# 2011-0017452
		N/R-TOTAL	1749	583	COUNTY	583	10.600	6.18	
		N/R-NET		583	MUNICPL	583	7.650	4.46	
		TOTAL NET		583	SCHOOL	583	9.638	5.63	
					NON-RES	583	29.250	17.06	
					HOSPITAL	583	2.000	1.17	
					JR. COL	583	5.000	2.92	
					HALF-1			10.58	
					HALF-2			10.57	
					CURR-TX			21.15	

PROPERTY# 4 000 904 240 001
SECTION-36 TOWNSHIP-21S RANGE-36E
CAB# 410-088 UNPROTESTED VALUE
5.00 AC LOC SE4
TR BEG N 466.7'FROM SE COR OF
SEC 36, TH N 193.3', N89D58'W
660', S89D58'E 193.3', N 466.7',
S89D58'E 466.7' TO BEG
1991-CITY OF EUNICE
2011-NOT RENDERED TO THE STATE

OWNER-0205769 LEA POWER PARTNERS LLC 98 N THOMBLY LANE HOBBS NM 88242	DISTRICT-160	N/R-CENTRAL	249999999	83333333	STATE	83333333	1.362	113500.00	BILL# 2011-0017453
		N/R-TOTAL	249999999	83333333	COUNTY	83333333	10.600	883333.33	
		N/R-NET		83333333	SCHOOL	83333333	9.346	778833.34	
		TOTAL NET		83333333	NON-RES	83333333	21.300	1775666.67	
					JR. COL	83333333	5.000	416666.67	
					HALF-1			1096166.67	See below
					HALF-2			1096166.67	See below
					CURR-TX			2192333.34	

PROPERTY# 4 000 407 020 001
SECTION-23 TOWNSHIP-18S RANGE-36E
160.00 AC BEING S2NE4, N2SE4
CAB# 220-019 UNPROTEGED VALUE
7/16/07-SMITH, RANDY D PRT #40702
2007-LEA POWER PARTNERS (INCORRECT)
SW4 SEC 24 CHANGED SUBSEQUENT
FOR 2007 & CORRECTED FOR 2008
B-1486 P-636
PROPERTY# 4 971 119 095 721
SECTION-24 TOWNSHIP-18S RANGE-36
153.03 AC BEING SW4
*LESS TR BEG S50021'30"E 420.10'
FROM NE COR SW4 SEC 24, TH
S00D28'E 310', S89D32'W 595',
N00D28'W 310', N89D32'E 595'
TO BEG (6.97 AC)
12/19/06-SMITH, RANDY D PRT #40702
B-1486 P-636
2007-WAS ALL LEA POWER PARTNERS
(INCORRECT) SUBSEQUENT FOR 2007
6/27/07-REDESCRIBED PRT TO #90111
SOUTHWESTERN PUBLIC SERVICE CO
(6.97 AC) B-1520 P-994

1st half tax
1,096,166.67 +
147,222.22 - 2 statement
948,944.45 / due by 12/10/11

2nd half tax
1,096,166.67 +
147,222.22 - 2 statement
948,944.45* due by 5/10/12

OWNER-0007587 LEA REGIONAL HOSPITAL PROPERTY VALUATION SERVICES % 14400 METCALF AVE OVERLAND PARK KS 66223	DISTRICT-161	N/R-PERSONAL	6408	2136	STATE	2136	1.362	2.91	BILL# 2011-0017454
		N/R-TOTAL	6408	2136	COUNTY	2136	10.600	22.64	
		N/R-NET		2136	MUNICPL	2136	5.152	11.00	
		TOTAL NET		2136	SCHOOL	2136	9.346	19.96	
					NON-RES	2136	26.460	56.51	
					JR. COL	2136	5.000	10.68	
					HALF-1			33.60	
					HALF-2			33.59	
					CURR-TX			67.19	

PROPERTY# 4 000 075 870 001
SECTION-00 TOWNSHIP-00S RANGE-00E
PERSONAL PROPERTY ONLY
EQUIP LOCATED LEA REGIONAL HOSPITAL
5419 LOVINGTON HWY, HOBBS, NM
NEW FOR 1999
5419 N LOVINGTON HWY

OWNER-0040708 LEA REGIONAL HOSPITAL PROPERTY VALUATION SERVICES % 14400 METCALF AVE OVERLAND PARK KS 66223	DISTRICT-161	N/R-LAND	120000	40000	STATE	7367715	1.362	10034.83	BILL# 2011-0017455
		N/R-IMPROVE	13299792	4433264	COUNTY	7367715	10.600	78097.78	
		N/R-PERSONAL	8683353	2894451	MUNICPL	7367715	5.152	37958.47	
		N/R-TOTAL	22103145	7367715	SCHOOL	7367715	9.346	68858.67	
		N/R-NET		7367715	NON-RES	7367715	26.460	194949.75	
		TOTAL NET		7367715	JR. COL	7367715	5.000	36838.58	
					HALF-1			115894.17	
					HALF-2			115894.16	
					CURR-TX			231788.33	

PROPERTY# 4 000 407 080 001
SECTION-07 TOWNSHIP-18S RANGE-38E
20.00 AC LOC NW4SE4
TR BEG N00D13'W 1208.35' &
N39D44'W 1254.43' FROM SE COR
SEC 7, TH N39D44'W 660',
N89D37'W 1506.44', S00D3'W 507.2',
S89D37'E 1928.76' TO BEG
*1982-REDESC ACRES EXCHANGE WITH
NM JR COLLEGE*

Copy of Property Tax Record Documents (IV)

STATE OF NEW MEXICO
COUNTY OF LEA
RESOLUTION NO. 08-AUG -037R

LEA POWER PARTNERS PROPERTY TAX EXEMPTION

WHEREAS, the legislature of the State of New Mexico has declared that local government may promote the general welfare of its citizenry by expenditures designed to promote trade, industry and other forms of economic development and diversification; and

WHEREAS, the Board of County Commissioners of Lea County, New Mexico has determined that a grant of economic incentives for development is a positive step to promote the general welfare of and a viable future for all the citizens of Lea County; and

WHEREAS, it is the finding of this Board that Lea Power Partners LLC has constructed a "new business facility" under the New Mexico Community Development Incentives Act and is eligible for exemption of property taxes due to the County under New Mexico law on the value of commercial personal property.

IT IS THEREFORE RESOLVED, by the Board of County Commissioners, Lea County, State of New Mexico that:

Section 1: Grant of Exemption.
There is granted an exemption of thirty-three and one-third percent (33 1/3%) of the property taxes due to Lea County on the value of commercial personal property under New Mexico law. The grant of exemption under this Resolution is pursuant to the New Mexico Community Development Incentives Act, NMSA 1978 Comp. Sections 3-64-1 to 3-64-5, inclusive, (hereinafter the "Act").

Section 2: General Provisions.
This resolution hereby adopts by reference all definitions, exemptions and provisions contained in the Act as it now exists or as it may be amended.

Section 3: Assignment
This exemption may only be assigned to another entity by Lea Power Partners LLC with the written consent of the Board.

Section 4: Actions Required
The Administrative Services Division of Lea County shall do all things necessary with the New Mexico Bureau of Revenue and Taxation and the Lea County Assessor to carry this Resolution into effect.

Section 5: Effective Date and Term.
The effective date of the exemption shall be January 1, 2009 and shall terminate on December 31, 2013, unless earlier terminated by the Board in their sole and absolute discretion.

PASSED, APPROVED AND ADOPTED IN OPEN MEETING by the Lea County Board of Commissioners this 5th day of August, 2008.

LEA COUNTY BOARD OF COMMISSIONERS

Gary M. Schubert, Chairman

Randall McCormick, Vice Chairman

Michael Whitehead, Member

Hector Ramirez, Member

Gregory H. Fuller, Member

ATTEST: Melinda Hughes
Lea County Clerk

By: Melinda Hughes

COUNTY CLERK SEAL LEA COUNTY, NEW MEXICO

Copy of Certified Letters Sent to Property Owners, City of Hobbs and Lea County

LEA POWER PARTNERS

Hobbs Generating Station
98 N. Twombly Lane
Hobbs, NM 88242
Ph 575-397-6700 Fax 575-397-6795

{Date}

{Name/Address}

RE: CERTIFIED MAIL _____

Dear Sir/Madam,

According to New Mexico air quality regulations, **Lea Powers Partners, LLC** must announce its intent to apply to the New Mexico Environment Department for an air quality permit for the modification of combustion turbine generators (CTGs) at its **Hobbs Generating Station**. The expected date of application submittal to the Air Quality Bureau is **March 05, 2014.**

The exact location for the proposed facility known as **Hobbs Generating Station** is at 98 N. Twombly Lane, Hobbs, NM 88240. The approximate location of this facility is 10 miles W. of Hobbs in Lea County, New Mexico.

The proposed modification consists of upgrading both CTGs by replacing the Row 1 Blade Ring and Rows 1 and 2 Turbine Blades and Vanes with new parts that have superior cooling technology. This change will result in the need for less cooling air and will have a corresponding increase in fuel consumption, exhaust flow rate, temperature, and electricity production. The estimated maximum quantities of any regulated air contaminant will be:

Pollutant:	Pounds per hour	Tons per year
Total Suspended Particulates (TSP)	34.2	120.4
PM_{10}	34.2	120.4
$PM_{2.5}$	34.2	120.4
Sulfur Dioxide (SO_2)	21.4	80.6
Nitrogen Oxides (NO_x)	36.2	185.6
Carbon Monoxide (CO)	22.0	311.6
Volatile Organic Compounds (VOC)	5.6	97.2
Total sum of all Hazardous Air Pollutants (HAPs)	0.66	1.96
Total sum of all Toxic Air Pollutants (TAPs)	64.2	281.3
Green House Gas Emissions as Total CO_2e	n/a	1,835,421

These emission estimates could change slightly during the course of the Department's review of the application.

The standard operating schedule of the facility will be 24 hours a day, 7 days a week and a maximum of 52 weeks per year. The maximum operating schedule will be 24 hours a day, 7 days a week and a maximum of 52 weeks per year.

Owners and operators of the facility include:

Owner: Lea Power Partners, LLC, 919 Milam Street, Suite 2300, Houston, TX, 77002
Operator: CAMS - NM, 98 N. Twombly Lane, Hobbs, NM 88240

If you have any comments about the construction or operation of the above facility, and you want your comments to be made as part of the permit review process, you must submit your comments in writing to the address below:

Permit Programs Manager
New Mexico Environment Department
Air Quality Bureau
525 Camino de los Marquez, Suite 1
Santa Fe, New Mexico 87505-1816
(505) 476-4300

Other comments and questions may be submitted verbally.

Please refer to the company name and facility name, as used in this notice or send a copy of this notice along with your comments, since the Department may not have received the permit application at the time of this notice. Please include a legible mailing address with your comments. Once the Department has performed a preliminary review of the application and its air quality impacts, the Department's notice will be published in the legal section of a newspaper circulated near the facility location.

Sincerely,

David Baugh
Asset Manager, Lea Power Partners, LLC
919 Milam Street, Suite 2300
Houston, TX 77002

Notice Posted in Publicly Accessible Places

NOTICE

According to New Mexico air quality regulations, **Lea Powers Partners, LLC** must announce its intent to apply to the New Mexico Environment Department for an air quality permit for the modification of combustion turbine generators (CTGs) at its **Hobbs Generating Station**. The expected date of application submittal to the Air Quality Bureau is **March 05, 2014.**

The exact location for the proposed facility known as **Hobbs Generating Station** is at 98 N. Twombly Lane Hobbs, NM 88242. The approximate location of this facility is 10 miles W. of Hobbs in Lea County, New Mexico.

The proposed modification consists of upgrading both CTGs by replacing the Row 1 Blade Ring and Rows 1 and 2 Turbine Blades and Vanes with new parts that have superior cooling technology. This change will result in the need for less cooling air and will have a corresponding increase in fuel consumption, exhaust flow rate, temperature, and electricity production. The estimated maximum quantities of any regulated air contaminant will be:

Pollutant	Pounds per hour	Tons per year
Total Suspended Particulates (TSP)	34.2	120.4
PM_{10}	34.2	120.4
$PM_{2.5}$	34.2	120.4
Sulfur Dioxide (SO_2)	21.4	80.6
Nitrogen Oxides (NO_x)	36.2	185.6
Carbon Monoxide (CO)	22.0	311.6
Volatile Organic Compounds (VOC)	5.6	97.2
Total sum of all Hazardous Air Pollutants (HAPs)	0.66	1.96
Total sum of all Toxic Air Pollutants (TAPs)	64.2	281.3
Green House Gas Emissions as Total CO_2e	n/a	1,835,421

These emission estimates could change slightly during the course of the Department's review of the application.

The standard operating schedule of the facility will be 24 hours a day, 7 days a week and a maximum of 52 weeks per year. The maximum operating schedule will be 24 hours a day, 7 days a week and a maximum of 52 weeks per year.

Owners and operators of the facility include:

Owner: Lea Power Partners, LLC, 919 Milam Street, Suite 2300, Houston, TX 77002
Operator: CAMS- NM, 98 N. Twombly Lane Hobbs, NM 88240

If you have any comments about the construction or operation of the above facility, and you want your comments to be made as part of the permit review process, you must submit your comments in writing to the address below:

Permit Programs Manager
New Mexico Environment Department
Air Quality Bureau
525 Camino de los Marquez, Suite 1
Santa Fe, New Mexico 87505-1816
Phone: (505) 476-4300 or 1 800 224-7009
Fax: (505) 476-4375

Other comments and questions may be submitted verbally.

Please refer to the company name and site name, as used in this notice or send a copy of this notice along with your comments, since the Department may not have received the permit application at the time of this notice. Please include a legible mailing address with your comments. Once the Department has performed a preliminary review of the application and its air quality impacts, the Department's notice will be published in the legal section of a newspaper circulated near the facility location.

Copy of the "General Posting of Notices – Certification"

General Posting of Notices – Certification

I, Daniela Grajiola, the undersigned, certify that I posted a true and correct copy of the attached Public Notice in the following publicly accessible and conspicuous places in or close to the City of Hobbs, Lea County, State of New Mexico on the following dates:

1. Hobbs Generating Station entrance 2-26-14
2. Hobbs Public Library 2-26-14
3. Hobbs City Hall 2-27-14

Signed this 27th day of Feb, 2014.

Daniela Grajiola

Signature

Daniela Grajiola

Printed Name

Manager of Division Accounts

Title

Copy of the "General Posting of Notices – Certification"

Receipt of Public Notice – Certification

I, Joseff Amador, the undersigned, certify that on **February 25, 2014**, I received a public notice to be posted on the online Community Bulletin Board (http://www.hobbsnm.org/bulletin_board.html) that serves the Hobbs City of Lea County, New Mexico, in which the source is or is proposed to be located.

Signed this 28 day of February, 2014.

Joseff Amador
Signature

2/28/14
Date

Joseff Amador
Printed Name

Entities Receiving the Certified Letters

Hobbs Generating Station is located in Lea County, which is considered a Class B County, based on county population and assessed property value[1]. Therefore, based on the NMED regulation 20.2.72.203(B)(1), public notifications consisting of a certified letter describing the permit application were sent to the property owners that are within one-half mile of the Hobbs property boundary. The names and addresses of the property owners within one-half mile from Hobbs Station property boundary were requested from Ms. Sharia Kennedy, Lea County Assessor.

Additionally, the NMED regulation 20.2.72.203(B)(2) requires that notices be sent to all municipalities and counties in which the facility is or will be located and all municipalities, counties, and Indian tribes that are within a 10 mile radius from the boundary of the property on which the facility is or will be located. The list of all municipalities in Lea County was obtained from http://www.nmml.org/. Hobbs Generating Station is located 10 miles west of Hobbs, New Mexico, in Lea County and the distance from this Station to the borders of Lea County is more than 10 miles in all directions. Therefore, a public notification consisting of a certified letter describing the permit was sent to City of Hobbs (Ms. Ann Betzen - Risk Manager of City of Hobbs) and to Lea County (Mr. Mike Gallagher - Lea County Manager). No additional notifications were submitted as no Indian tribes are located within a 10 mile radius from the Hobbs property line. Table 9–1 summarizes the entities that received the certified letters.

Table 9–1 List of Entities Receiving the Certified Letters

Entity	Address
City of Hobbs	Ann Betzen- Risk Manager City of Hobbs 200 E. Broadway
Lea County	Mike Gallagher- Lea County Manager Attn: Sandrea Stout-Brito 100 North Main Suite 4
Southwestern Public Service Company	PO Box 840, Denver, CO, TX 77210
Snyder Ranches, Inc.	PO Box 2158 , Hobbs, NM 88241
El Paso Natural Gas Company	PO Box 4372, Houston, TX 77210
Carlin Properties, LLC	PO Box 188, Monument, NM 88265-0188
International Isotopes, Inc.	100 N Main, Suite 4, Lovington, NM 88260
Randy and Naomi Smith	PO Box 633, Carlsbad, NM 88221-0633
New Mexico State Land Office	PO Box 1148, Santa Fe, NM 87504
Bureau of Land Management	PO Box 27115, Santa Fe, NM 87502-0115

ate.nm.us/Annual_Report_2010.aspx

Copy of the Public Service Announcement (PSA) Sent to KYKK Radio Station

1) The name, location, and type of business;

Hobbs Generating Station
98 N. Twombly Lane Hobbs, NM 88242 (10 miles W. of Hobbs in Lea County, New Mexico)
The plant generates electricity for sale to Southwestern Public Service Company, its successors or assigns.

2) the name of the principal owner or operator;

Owner:
Lea Power Partners, LLC
919 Milam Street, Suite 2300
Houston, TX 77002

3) the type of process or change for which a permit is sought;

The proposed modification consists of upgrading both CTGs by replacing the Row 1 Blade Ring and Rows 1 and 2 Turbine Blades and Vanes with new parts that have superior cooling technology. This change will result in the need for less cooling air and will have a corresponding increase in fuel consumption, exhaust flow rate, temperature, and electricity production.

4) locations where the notices have been posted;

Public Notices have been sent/posted as follows:

a) property owners within one-half (½) mile radius from the property boundary on which Hobbs Generating Station is located
b) City of Hobbs (Ms. Ann Betzen, Risk Manager)
c) Lea County (Mr. Mike Gallagher, Lea County Manager)
d) Hobbs News – Sun newspaper
e) Entrance gate to Hobbs Generating Station
f) Hobbs Public Library
g) Hobbs City Hall
h) Online Community Bulletin Board of Hobbs City Hall, www.hobbsnm.org/buletin_board.html

5) The NMED's address or telephone number to which comments may be directed.

Any comments about the construction or operation of the above facility must be submitted to:

Permit Programs Manager
New Mexico Environment Department
Air Quality Bureau
525 Camino de los Marquez, Suite 1
Santa Fe, New Mexico 87505-1816
(505) 476-4300

Copy of the "Submittal of Public Service Announcement – Certification"

Submittal of Public Service Announcement – Certification

I, Violeta F. Coarfa, the undersigned, certify that on **February 25, 2014**, I submitted a public service announcement to **KYKK Radio Station** (format – Talk/Information/Sports) that serves the City of Hobbs, Lea County, New Mexico, in which Hobbs Generating Station is located and that KYKK Radio Station responded that they have received the announcement.

Signed this 25 day of February, 2014.

Signature

02/25/2014

Date

VIOLETA F. COARFA

Printed Name

Environmental Associate

Title

Affidavit of Publication – Display Notice

Affidavit of Publication

State of New Mexico,
County of Lea.

I, DANIEL RUSSELL
PUBLISHER
of the Hobbs News-Sun, a newspaper published at Hobbs, New Mexico, do solemnly swear that the clipping attached hereto was published in the regular and entire issue of said newspaper, and not a supplement thereof for a period

of 1 issue(s).
Beginning with the issue dated
February 27, 2014
and ending with the issue dated
February 27, 2014

PUBLISHER
Sworn and subscribed to before me
this 27th day of
February, 2014

Gussie Black

Notary Public

My commission expires
January 29, 2015
(Seal)

OFFICIAL SEAL
GUSSIE BLACK
Notary Public
State of New Mexico
My Commission Expires 1-29-15

This newspaper is duly qualified to publish legal notices or advertisments within the meaning of Section 3, Chapter 167, Laws of 1937 and payment of fees for said publication has been made.

NOTICE OF AIR QUALITY PERMIT APPLICATION

According to New Mexico air quality regulations, **Lea Powers Partners, LLC** must announce its intent to apply to the Mexico Environment Department for an air quality permit for the modification of combustion turbine generators (CTGs) **Hobbs Generating Station**. The expected date of application submittal to the Air Quality Bureau is **March 05, 2014.**

The exact location for the proposed facility known as **Hobbs Generating Station** is at 98 N. Twombly Lane, Hobbs 88242. The approximate location of this facility is 10 miles W. of Hobbs in Lea County, New Mexico.

The proposed modification consists of upgrading both CTGs by replacing the Row 1 Blade Ring and Rows 1 and 2 Blades and Vanes with new parts that have superior cooling technology. This change will result in the need for less cool and will have a corresponding increase in fuel consumption, exhaust flow rate, temperature, and electricity production.

The estimated maximum quantities of any regulated air contaminant will be:

Pollutant	Pounds per hour	Tons per year
Total Suspended Particulates (TSP)	34.2	120.4
PM_{10}	34.2	120.4
$PM_{2.5}$	34.2	120.4
Sulfur Dioxide (SO_2)	21.4	80.6
Nitrogen Oxides (NO_x)	36.2	185.6
Carbon Monoxide (CO)	22.0	311.6
Volatile Organic Compounds (VOC)	5.6	97.2
Total sum of all Hazardous Air Pollutants (HAPs)	0.66	1.96
Total sum of all Toxic Air Pollutants (TAPs)	64.2	281.3
Green House Gas Emissions as Total CO_2e	n/a	1,835,421

These emission estimates could change slightly during the course of the Department's review of the application.

The standard operating schedule of the facility will be 24 hours a day, 7 days a week and a maximum of 52 weeks per The maximum operating schedule will be 24 hours a day, 7 days a week and a maximum of 52 weeks per year.

Owners and operators of the facility include:

Owner: Lea Power Partners, LLC, 519 Milam Street, Suite 2300, Houston, TX 77002
Operator: CAMS - NM, 98 N. Twombly Lane, Hobbs, NM 88240

If you have any comments about the construction or operation of the above facility, and you want your comments to be as part of the permit review process, you must submit your comments in writing to the address below:

Permit Programs Manager
New Mexico Environment Department
Air Quality Bureau
525 Camino de los Marquez, Suite 1
Santa Fe, New Mexico 87505-1816
(505) 476-4300

Other comments and questions may be submited verbally.

Please refer to the company name and site name, as used in this notice or send a copy of this notice along with your comm since the Department may not have received the permit application at the time of this notice. Please include a legible m address with your comments. Once the Department has performed a preliminary review of the application and its air c impacts, the Department's notice will be published in the legal section of a newspaper circulated near the facility location

67111375 00131558
VIOLETA COARFA
CAMS eSPARC, LLC
1110 NASA PKWY, Ste 212
HOUSTON, TX 77058

Affidavit of Publication – Legal Notice

Affidavit of Publication

State of New Mexico,
County of Lea.

I, DANIEL RUSSELL
PUBLISHER
of the Hobbs News-Sun, a newspaper published at Hobbs, New Mexico, do solemnly swear that the clipping attached hereto was published in the regular and entire issue of said newspaper, and not a supplement thereof for a period

of 1 issue(s).
Beginning with the issue dated
February 27, 2014
and ending with the issue dated
February 27, 2014

PUBLISHER
Sworn and subscribed to before me
this 27th day of
February, 2014

Notary Public

My commission expires
January 29, 2015
(Seal)

OFFICIAL SEAL
GUSSIE BLACK
Notary Public
State of New Mexico
My Commission Expires 1-29-15

This newspaper is duly qualified to publish legal notices or advertisments within the meaning of Section 3, Chapter 167, Laws of 1937 and payment of fees for said publication has been made.

LEGAL NOTICE
February 27, 2014

NOTICE OF AIR QUALITY PERMIT APPLICATION

According to New Mexico air quality regulations, **Lea Power Partners, LLC** must announce its intent to apply to the New Mexico Environment Department for an air quality permit for the modification of combustion turbine generators (CTGs) at its **Hobbs Generating Station**. The expected date of application submittal to the Air Quality Bureau is **March 05, 2014**.

The exact location for the proposed facility known as **Hobbs Generating Station** is at 98 N. Twombly Lane, Hobbs, NM 88242. The approximate location of this facility is 10 miles W. of Hobbs in Lea County, New Mexico.

The proposed modification consists of upgrading both CTGs by replacing the Row 1 Blade Ring and Rows 1 and 2 Turbine Blades and Vanes with new parts that have superior cooling technology. This change will result in the need for less cooling air and will have a corresponding increase in fuel consumption, exhaust flow rate, temperature, and electricity production.

The estimated maximum quantities of any regulated air contaminant will be:

Pollutant	Pounds per hour	Tons per year
Total Suspended Particulates (TSP)	34.2	120.4
PM10	34.2	120.4
PM2.5	34.2	120.4
Sulfur Dioxide (SO2)	21.4	80.6
Nitrogen Oxides (NOx)	36.2	185.6
Carbon Monoxide (CO)	22.0	311.6
Volatile Organic Compounds (VOC)	5.6	97.2
Total sum of all Hazardous Air Pollutants (HAPs)	0.66	1.96
Total sum of all Toxic Air Pollutants (TAPs)	64.2	281.3
Green House Gas Emissions as Total CO2e	n/a	1,635,421

These emission estimates could change slightly during the course of the Department's review of the application.

The standard operating schedule of the facility will be 24 hours a day, 7 days a week and a maximum of 52 weeks per year. The maximum operating schedule will be 24 hours a day, 7 days a week and a maximum of 52 weeks per year.

Owners and operators of the facility include:

Owner: Lea Power Partners, LLC, 919 Milam Street, Suite 2300, Houston, TX 77002
Operator: CAMS - NM, 98 N. Twombly Lane, Hobbs, NM 88240

If you have any comments about the construction or operation of the above facility, and you want your comments to be made as part of the permit review process, you must submit your comments in writing to the address below:

Permit Programs Manager
New Mexico Environment Department
Air Quality Bureau
525 Camino de los Marquez, Suite 1
Santa Fe, New Mexico 87505-1816
(505) 476-4300

Other comments and questions may be submitted verbally.

Please refer to the company name and site name, as used in this notice or send a copy of this notice along with your comments, since the Department may not have received the permit application at the time of this notice. Please include a legible mailing address with your comments. Once the Department has performed a preliminary review of the application and its air quality impacts, the Department's notice will be published in the legal section of a newspaper circulated near the facility location.
#25798

67111375 00131545
VIOLETA COARFA
CAMS eSPARC, LLC
1110 NASA PKWY, Ste 212
HOUSTON, TX 77058

Map of Hobbs and Surrounding Area in Which Owners Were Notified by Mail

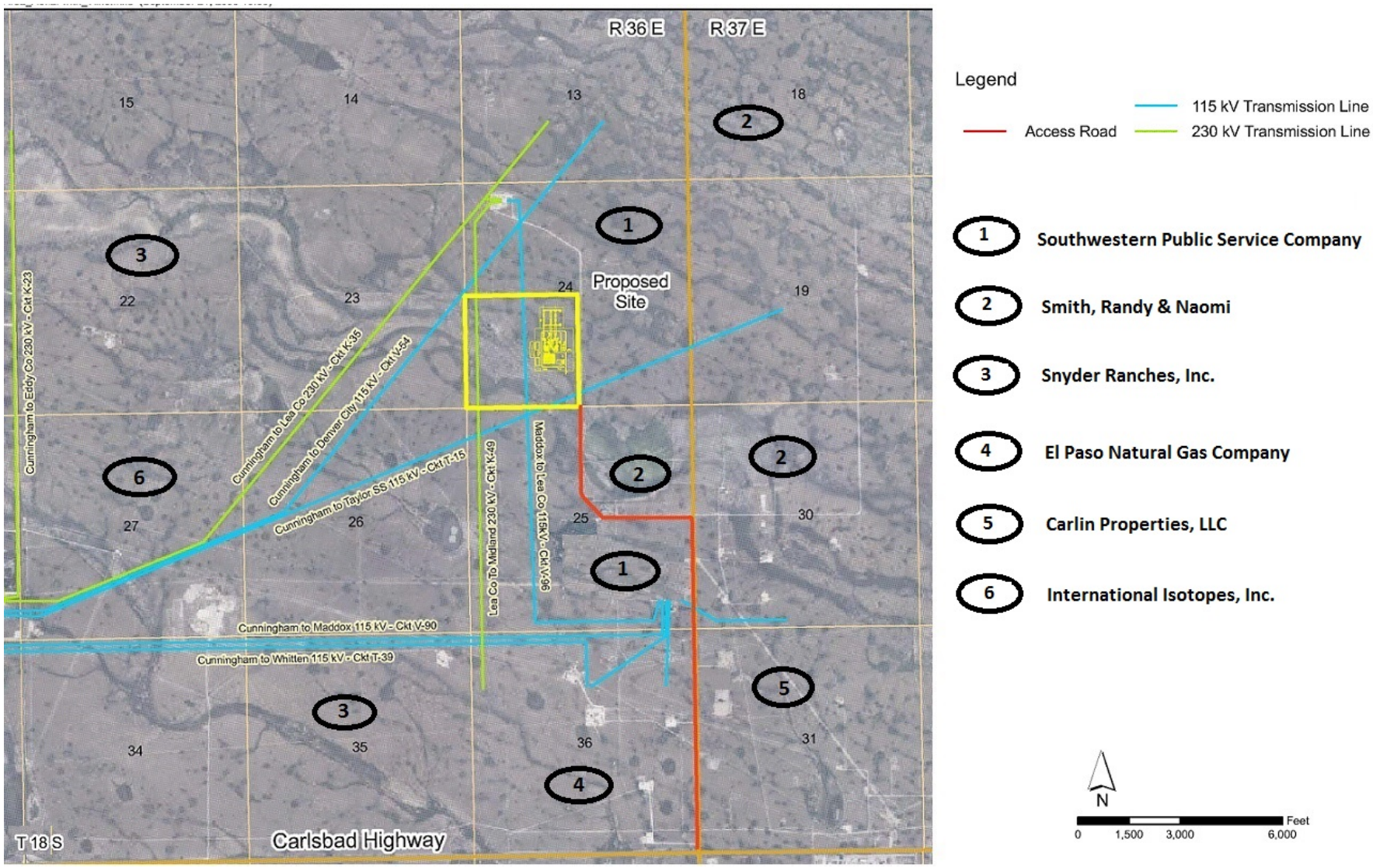

Section 10
Written Description of the Routine Operations of the Facility

---

A written description of the routine operations of the facility. Include a description of how each piece of equipment will be operated, how controls will be used, and the fate of both the products and waste generated. For modifications and/or revisions, explain how the changes will affect the existing process. In a separate paragraph describe the major process bottlenecks that limit production. The purpose of this description is to provide sufficient information about plant operations for the permit writer to determine appropriate emission sources.

Hobbs is a natural gas fueled, nominal 600 MW gross output power plant with two advanced firing temperature, Mitsubishi 501F CTGs, each provided with its own HRSG including duct burners, a single condensing, reheat STG, and an air cooled condenser serving the STG. The plant generates electricity for sale to Southwestern Public Service Company, its successors or assigns. The facility is located approximately 9 miles west of Hobbs, New Mexico in Lea County.

The exhaust from each CTG is delivered to a HRSG that produces the steam to drive the STG. Supplemental firing, using duct burners, is employed during periods of peak demand to increase HRSG steam production.

A surface condenser (heat exchanger) is used to condense the steam exhaust from the STG. Condensing the steam produces a slight vacuum, thus increasing the pressure differential that drives the steam turbine and increasing the overall efficiency of the power plant. Dry cooling is utilized to condense the steam exhaust from the steam turbine.

Section 11
Source Determination

Source submitting under 20.2.70, 20.2.72, 20.2.73, and 20.2.74 NMAC

Sources applying for a construction permit, PSD permit, or operating permit shall evaluate surrounding and/or associated sources (including those sources directly connected to this source for business reasons) and complete this section. Responses to the following questions shall be consistent with the Air Quality Bureau's permitting guidance, Single Source Determination Guidance, which may be found on the Applications Page in the Permitting Section of the Air Quality Bureau website.

Typically, buildings, structures, installations, or facilities that have the same SIC code, that are under common ownership or control, and that are contiguous or adjacent constitute a single stationary source for 20.2.70, 20.2.72, 20.2.73, and 20.2.74 NMAC applicability purposes. Submission of your analysis of these factors in support of the responses below is optional, unless requested by NMED.

A. Identify the emission sources evaluated in this section (list and describe)**:**
HOBB-1, HOBB-2, DB-1, DB-2

B. Apply the 3 criteria for determining a single source:

SIC Code: Surrounding or associated sources belong to the same 2-digit industrial grouping (2-digit SIC code) as this facility, OR surrounding or associated sources that belong to different 2-digit SIC codes are support facilities for this source.

☒ **Yes** ☐ **No**

Common Ownership or Control: Surrounding or associated sources are under common ownership or control as this source.

☒ **Yes** ☐ **No**

Contiguous or Adjacent: Surrounding or associated sources are contiguous or adjacent with this source.

☒ **Yes** ☐ **No**

C. Make a determination:

☒ The source, as described in this application, constitutes the entire source for 20.2.70, 20.2.72, 20.2.73, or 20.2.74 NMAC applicability purposes. If in "A" above you evaluated only the source that is the subject of this application, all "**YES**" boxes should be checked. If in "A" above you evaluated other sources as well, you must check **AT LEAST ONE** of the boxes "**NO**" to conclude that the source, as described in the application, is the entire source for 20.2.70, 20.2.72, 20.2.73, and 20.2.74 NMAC applicability purposes.

☐ The source, as described in this application, **does not** constitute the entire source for 20.2.70, 20.2.72, 20.2.73, or 20.2.74 NMAC applicability purposes (A permit may be issued for a portion of a source). The entire source consists of the following facilities or emissions sources (list and describe):

Section 12

Section 12.A
PSD Applicability Determination for All Sources

(Submitting under 20.2.72, 20.2.74 NMAC)

A PSD applicability determination for all sources. For sources applying for a significant permit revision, apply the applicable requirements of 20.2.74.AG and 20.2.74.200 NMAC and to determine whether this facility is a major or minor PSD source, and whether this modification is a major or a minor PSD modification. It may be helpful to refer to the procedures for Determining the Net Emissions Change at a Source as specified by Table A-5 (Page A.45) of the EPA New Source Review Workshop Manual to determine if the revision is subject to PSD review.

A. This facility is:

- ☐ a minor PSD source before and after this modification (if so, delete C and D below).
- ☐ a major PSD source before this modification. This modification will make this a PSD minor source.
- ☐ an existing PSD Major Source that has never had a major modification requiring a BACT analysis.
- ☒ an existing PSD Major Source that has had a major modification requiring a BACT analysis
- ☐ a new PSD Major Source after this modification.

B. This facility is one of the listed 20.2.74.501 Table I – PSD Source Categories. The "project" emissions for this modification are significant as proposed project increases exceed the PSD Significant Emission Rate (SER) for each pollutant (refer to **Table 12–1** below). The "project" emissions listed below do only result from changes described in this permit application, thus no emissions from other revisions or modifications, past or future to this facility. This project will not cause or generate any additional emissions. The project emissions (before netting) for this project are as follows [see Table 2 in 20.2.74.502 NMAC for a complete list of significance levels]:

a. **NOx: 189.1 TPY**
b. **CO: 313.0 TPY**
c. **VOC: 97.5 TPY**
d. **SOx: 80.9 TPY**
e. **TSP (PM): 121.9 TPY**
f. **PM10: 121.3 TPY**
g. **PM2.5: 120.4 TPY**
h. **Fluorides: N/A**
i. **Lead: N/A**
j. **Sulfur compounds (listed in Table 2): N/A**
k. **GHG: CO_2e: 1,893,043 TPY**

C. **Netting**: Applicant is submitting a PSD Major Modification and chooses not to net.

D. **BACT** is required, as this application is a major modification. A top down BACT determination is provided for the CTG/HRSG air emissions of NOx, CO, VOC, SO_2, $PM_{10}/PM_{2.5}$, and CO_2e.

E. If this is an existing PSD major source, or any facility with emissions greater than 250 TPY (or 100 TPY for 20.2.74.501 Table 1 – PSD Source Categories), determine whether any permit modifications are related, or could be considered a single project with this action, and provide an explanation for your determination whether a PSD modification is triggered.

Hobbs is located in Lea County, an area that is classified by the U.S. EPA as attainment with the NAAQS for all regulated pollutants. The facility is included as one of the 28-named sources under PSD rules and is a major source as defined by the PSD rules (40 CFR §52.21). The estimated annual emission rate increases for the facility proposed CTG upgrade are summarized in **Table 12–1**.

Table 12–1 PSD Applicability Analysis

Air Pollutant	Past Actuals both Units Combined (tpy)	Proposed Project Annual Both Unit Combined (tpy)	Proposed Project Increase Both Units Combined (tpy)	PSD SER (tpy)	Netting Required?	PSD Review Required?
NOx	75.8	189.1	113	40	N/A	Yes
CO	3.7	313.0	309	100	N/A	Yes
VOC	8.8	97.5	89	40	N/A	Yes
SO_2	7.0	80.9	74	40	N/A	Yes
H_2SO_4 (mist)	1.07	12.34	11	7	N/A	Yes
PM_{10}	72.2	121.3	49	10	N/A	Yes
$PM_{2.5}$	72.2	120.4	48	15	N/A	Yes
CO_2e	1,385,260	1,893,043	507,784	75,000	N/A	Yes

Since no emission rate decreases occurred during the contemporaneous period, the net emission rate increases are based on the proposed project emission rate increases which exceed the PSD Significant Emission Rate (SER) for each pollutant. Consequently, the proposed modification constitutes a major modification of an existing major source and PSD review is required for each regulated pollutant with significant emissions, as defined in 40 CFR 52 (§52.21(b)(23)). As shown in **Table 12–1**, all regulated pollutants emission rate increases exceed the SER.

Section 12.B
Special Requirements for a PSD Application

(Submitting under 20.2.74 NMAC)

Prior ***to Submitting a PSD application*****, the permittee shall:**

- ☒ Submit the BACT analysis for review prior to submittal of the application. No application will be ruled complete until the final determination regarding BACT is made, as this determination can ultimately affect information to be provided in the application. A pre-application meeting is recommended to discuss the requirements of the BACT analysis.
  The BACT analysis for the proposed changes was submitted to New Mexico Environmental Department on February 13, 2014.
- ☒ Submit a modeling protocol prior to submitting the permit application. **[Except for GHG]**
  An Air Dispersion Modeling Waiver was submitted to New Mexico Environmental Department on February 13, 2014.
- ☒ Submit the monitoring exemption analysis protocol prior to submitting the application. **[Except for GHG]**

For PSD applications, the permittee shall also include the following:

- ☒ Documentation containing an analysis on the impact on visibility. **[Except for GHG]**
- ☒ Documentation containing an analysis on the impact on soil. **[Except for GHG]**
- ☒ Documentation containing an analysis on the impact on vegetation, including state and federal threatened and endangered species. **[Except for GHG]**
- ☒ Documentation containing an analysis on the impact on water consumption and quality. **[Except for GHG]**
- ☐ Documentation that the federal land manager of a Class I area within 100 km of the site has been notified and provided a copy of the application, including the BACT and modeling results. The name of any Class I Federal area located within one hundred (100) kilometers of the facility.

  The nearest Class I area to Hobbs Generating Station is Carlsbad Caverns National Park (Eddy County, NM), located approximately 120 Km southwest. Therefore, notification of Class I area Federal Land Manager is not required.

12.B.1 BACT Analysis

This section presents the Best Available Control Technology (BACT) analysis for the proposed upgraded CTGs. PSD regulations require that BACT be used to minimize the emissions of pollutants subject to PSD review from a new major source or a major modification of an existing major source. BACT is determined on a case-by-case basis taking into consideration economic, environmental, and energy impacts, and technical feasibility. BACT must be applied to each new or modified emission point of the pollutants subject to review. The pollutants subject to PSD review for the proposed project are NOx, CO, $PM_{10}/PM_{2.5}$ and CO_2e. NMED Chapter 20.2.74.302 also requires that BACT be applied to minimize emissions from any new or modified sources.

BACT selection is based on the US EPA recommended five-step "top-down" methodology. First, all available control alternatives are identified for each new or modified source of significant pollutants. The identification of control alternatives is performed through knowledge of the applicant's particular industry and previous regulatory decisions for identical or similar sources. A detailed search of the latest RACT/BACT/LAER Clearinghouse (RBLC) database, for natural gas fired combined cycle units, was completed. Summary tables are included at the end of this section. In the cally infeasible alternatives are dismissed based on either physical or chemical principles. Remaining

alternatives are then rank-ordered beginning with the most stringent control and working down to form a control technology hierarchy in the third step. In the fourth step, the ranked technologies are evaluated for their energy, environmental and economic impact. If these considerations do not justify eliminating the top-ranked option, it should be selected as BACT at the fifth step. However, if the energy, environmental, or economic impacts of the top-ranked option demonstrate that this option is not achievable, then the evaluation of this option stops at Step 4 of the process and continues with an examination of the energy, environmental, and economic impacts of the second-ranked option, third-ranked option, etc. The results of the first four steps are used to select the most appropriate BACT in the fifth step. The discussion of proposed BACT for each source type is provided in the following sections.

The NMED also requires that BACT be addressed for SSM sources. In general, best management practices will be employed during scheduled maintenance operations. No existing controls that are normally available during these activities will be bypassed. No additional controls are required for maintenance beyond current practices to minimize emissions to the greatest extent possible.

Table 12–2 summarizes the control technologies proposed for the Hobbs CTGs to meet BACT. The remainder of this section describes the individual BACT analyses.

Table 12–2 Summary of BACT Control Methods for Hobbs CTGs/HRSG Duct Burners

Pollutant	Proposed BACT	Proposed Concentration Limit	Averaging Period
NOx	Dry low NOx burners for the CTGs. Low NOx burners for the duct burners. SCR.	2 ppmvdc	Averaged over 24 hours.
CO	Pipeline quality natural gas only. Good combustion practices. Oxidation catalyst.	2 ppmvdc	Averaged over 1 hour.
VOC	Pipeline quality natural gas only. Good combustion practices. Oxidation catalyst.	1 ppmvdc	Daily rolling 24-hour average.
SO_2	Pipeline quality natural gas only. Good combustion practices.		
$PM_{10}/PM_{2.5}$	Pipeline quality natural gas only. Good combustion practices.		
CO_2e	Combined cycle power generation technology. Pipeline quality natural gas only. 2x1 configuration. Efficient CTGs design and practices. Efficient HRSG design and practices. Fuel Flow meter calibration 40 CFR 75.	691 lb_{CO2}/MWh (HHV) 6,709 Btu/kWh	

Continues on the following page

Table 2-2 Summary of BACT Control Methods for Hobbs CTGs/HRSG Duct Burners *(continued)*

Pollutant	Proposed BACT	Proposed Concentration Limit	Averaging Period
NH_3	Proper operation of SCR	10 ppmvdc	Averaged over 1 hour
SSM activities	Limited to emission rate estimates described in **Section 6** and UA2 Form.		

BACT Analysis for NOx

NOx emissions from turbines and duct burners are the result of either the combination of elemental nitrogen and oxygen in air within the combustion device (thermal NOx), or the oxidation of the nitrogen contained in the fuel (fuel NOx). Pipeline quality natural gas fuel does not contain a significant amount of nitrogen; therefore, most of the NOx emissions from the turbines and the duct burners are the result of thermal NOx.

BACT Step 1 – Identify All Available Control Technologies

Table 12–3 summarizes, in order of increasing efficiency, the available NOx control technologies listed for gas fired combined cycle units in the current RBLC database (refer to the end of this section).

Table 12–3 Natural Gas Fired Combined Cycle NOx Control Technologies

Control Technology	Description
Good Combustion Practices	Suppression of thermal NOx formation in combustion sources is commercially demonstrated through the adjustment of the air-fuel ratio, combustion air temperature, and combustion zone cooling. Adjustments of these parameters may be accomplished through water injection or dry control technology.
Steam/Water Injection	To reduce combustion temperature, steam or water can be mixed with the air flow. This lowers combustion temperature to below 1,400^{o}F, limiting thermal NOx generation. However, this technique has the disadvantage of potentially increasing the concentration of CO and unburned hydrocarbons emitted from the turbine.
Low NOx Burners	Low NOx burners allow for a reduced oxygen level, in comparison to ambient air (approximately 10% versus 21%), resulting in peak flame temperatures less than 3,000 degrees Fahrenheit, and therefore reduce the generation of thermal NOx.
Lean Pre-Mix, Dry Low NOx (DLN) Combustion	DLN combustors and pre-mixing fuel and air, minimize flame temperature and therefore the generation of thermal NOx.
XONON	This technology is designed to avoid the high temperatures created in conventional combustors. The XONON combustor operates below 2,700°F at full power generation, which significantly reduces NOx emissions without raising, and possibly even lowering, emissions of CO and unburned hydrocarbons. XONON uses a proprietary flameless process in which fuel and air react on the surface of a catalyst in the turbine combustor to produce energy in the form of hot gases, which drive the turbine.

Continues on the following page

Table 12-3 Natural Gas Fired Combined Cycle NOx Control Technologies *(continued)*

Control Technology	Description
EMx (SCONOx)	The EMx (SCONOx) system is based on a multi-pollutant reducing platinum catalyst bed coated with potassium carbonate. The catalyst is designed to reduce NOx, CO and VOC emissions and is situated downstream of the combustion chamber in a separate reactor vessel and operates in an ideal temperature window of 300 °F to 700 °F. The EMx system does not require a reactant. The SCONOx catalyst is very susceptible to fouling by sulfur in the flue gas. These catalysts have high frequency maintenance requirements (recoating or washing must be done every 6 months to a year depending on the gas sulfur content).
Selective Catalytic Reduction (SCR)	Ammonia is injected from the SCR system into the turbine and duct burner exhaust gases upstream of a catalyst bed. On the catalyst surface, ammonia reacts with NOx to form nitrogen and water. Optimal NOx reduction occurs at catalyst bed temperatures between 575 and 750 degrees Fahrenheit for conventional (typically vanadium or titanium-based) catalyst types. The NOx removal efficiency depends on the flue gas temperature, amount of catalyst, and the NH_3 to NOx ratio in the flue gas stream. According to the RBLC database, recent permits have been issued at NOx emission rates as low as 2.0 ppmvdc, 24-hour average, using SCR technology on natural gas fired combined cycle turbines, with ammonia slip levels in the neighborhood of 7 ppmvdc.

BACT Step 2 – Eliminate Technically Infeasible Options

The only options considered to be technically infeasible are XONON and EMx (SCONOx). These technologies are promising, but have limited commercial validation. The only installations have been on smaller power generation units (<85 MW each).

The only two sites found in the RBLC data base that use these technologies were: three 56 MW units at a facility employing XONON and two 83 MW units at a site employing EMx. These units are three to four time smaller than the Hobbs CTGs. Both technologies claim a NOx exhaust concentration of 2.5 ppmvdc. The scalability and reliability of these technologies remains to be proven. Therefore, due to the differences in the size and the lack of sufficient commercial applications, these options were deemed to be undemonstrated for the proposed facility and technically infeasible.

BACT Step 3 – Rank Remaining Control Technologies

Technically feasible technologies are therefore, in order of increasingly efficiency, good combustion practices, steam or water injection, low NOx burners, DLN combustors and SCR. According to the data from RBLC database, the combination of good combustion practices and DLN combustors can achieve NOx exhaust concentrations of 9 ppmvdc. The combination of low NOx burners and SCR can achieve NOx exhaust concentrations of 3.5 ppmvdc. The top level control is considered to be the combination of good combustion practices, use of pre-mix DLN combustion, use of low NOx burners and SCR, shown to achieve NOx exhaust concentrations of 2 ppmvdc.

BACT Step 4 – Evaluate Most Effective Control Technologies

The most effective control technology listed for units comparable to those at the proposed project is good combustion practices combined with the use of pre-mix DLN combustion, low NOx burners, and SCR catalyst. These technologies are commonly employed and consistently meet concentration limits in the range of 2 ppmvdc to 2.5ppmvdc. The technologies are robust and proven.

BACT Step 5 – Select BACT

The Hobbs combined cycle units were equipped since construction with SCR in combination with DLN combustors and low NOx burners to achieve a NOx emission rate of 2.0 ppmvdc for a 24-hour averaging period. These control technologies have been commonly applied as BACT in more recent permitting activities [e.g., Avenal Energy Project (CA), Colusa Generation Station (CA), King Power Station (TX) and Thomas C. Ferguson Power Station (TX)].

BACT Analysis for CO

Carbon monoxide emissions from combustion turbines and duct burners are the result of incomplete fuel combustion. Operating conditions that may enhance CO formation include low temperature, insufficient residence time, and insufficient oxygen in the combustion zone. Insufficient oxygen may be the result of either a low air-to-fuel ratio or inadequate mixing, or both.

BACT Step 1 – Identify All Available Control Technologies

Table 12–4 summarizes, in order of increasing efficiency, the available CO control technologies listed for gas fired combined cycle units in the current RBLC database (refer to the end of this section).

Table 12–4 Natural Gas Fired Combined Cycle CO Control Technologies

Control Technology	Description
Good Combustion Practices	Good combustion practices refer to design and operational practices that promote the complete combustion of fuel, leading to lower CO emissions, such as (1) efficient tuning of the air-to-fuel ratio in the combustion zone to allow minimal generation of unburned carbon; (2) proper combustor design that promotes air/fuel mixing and longer combustion chamber residence times, adequate temperature and turbulence; and (3) diligent maintenance and operation according to manufacturer's specifications.
EMx (SCONOx)	The EMx (SCONOx) system is based on a multi-pollutant reducing platinum catalyst bed coated with potassium carbonate. The catalyst is designed to reduce NOx, CO and VOC emissions and is situated downstream of the combustion chamber in a separate reactor vessel and operates in an ideal temperature window of 300 °F to 700 °F. The EMx system does not require a reactant. The SCONOx catalyst is very susceptible to fouling by sulfur in the flue gas. These catalysts have high frequency maintenance requirements (recoating or washing must be done every 6 months to a year depending on the gas sulfur content).
Catalytic Oxidation	Catalytic oxidation is a post-combustion control technology which oxidizes CO to CO_2. Most oxidation catalysts are comprised of a honeycomb-shaped titanium substrate, and coated with noble metals (usually in the platinum group). There is a pressure drop across the catalyst of 1.0 to 1.2 inches of water column that results in a slight decrease in the maximum power output of the turbine. On CTG/HRSG applications with SCR, the catalyst must be located upstream of the NH_3 injection system, to preclude oxidation formation of NO_x and H_2O. The catalyst causes the CO in the flue gas to be oxidized to CO_2 at temperatures in the 700°F to 1,000°F range. Depending on the velocity of the exhaust gas through the catalyst (space velocity), the catalyst may oxidize up to 80% of the CO and achieve exhaust CO concentrations of 2 to 4 ppmvdc. During startups and shutdowns, the flue gas temperature is often below this optimum range, and the CO reduction is diminished. The expected catalyst life is approximately 7 years. This technology has been demonstrated primarily on natural gas fired turbines in a combined cycle configuration.

BACT Step 2 – Eliminate Technically Infeasible Options

EMx (SCONOx) is considered technically infeasible. This technology has limited commercial validation. Only one site with two 83 MW units was found in the RBLC data base using this technology. These units are three times smaller than the Hobbs units and do not achieve the required BACT exhaust concentration of 2 ppmvdc. The SCONOX claims a CO exhaust concentration of 4 ppmvd at 15% O_2. The scalability and reliability of these technologies remains to be proven. Therefore, due to the differences in the size and the lack of sufficient commercial applications, this option was deemed to be undemonstrated for the proposed facility and technically infeasible.

BACT Step 3 – Rank Remaining Control Technologies

Good combustion practices and oxidation catalysts are, therefore, the only technically feasible technologies. According to the information available in the RBLC database, good combustion practices can achieve CO exhaust concentrations between 6 to 8 ppmvdc, while incorporating oxidation catalyst will allow achieving levels of 2 to 4 ppmvdc. Consequently, the top level control is the combination of both technologies.

BACT Step 4 – Evaluate Most Effective Control Technologies

Good combustion practices with current combustor designs can guarantee a CO emission rate as low as 6 ppmvdc. In combination with CO catalyst, the exhaust concentration may be further reduced to 2 ppmvdc. Despite the potentially negative effects of the oxidation catalyst (i.e., the generation of a hazardous waste (spent catalyst), an increase in CO_2 emissions by improving full combustion of CO and VOC, and the reduction in net power generation due to parasitic load), most combined cycle units will not achieve the 2 ppmvdc BACT limits without the oxidation catalyst, according to the RBLC database search results. Good combustion practices in combination with an oxidation catalyst are commonly employed and consistently meet concentration limits in the range of 1.5 ppmvdc to 6 ppmvdc. The technologies are robust and proven.

BACT Step 5 – Select BACT

The Hobbs combined cycle units were equipped since construction with an oxidation catalyst and are routinely operated following good combustion practices to achieve an average annual CO emission rate of 2.0 ppmvdc. These control technologies have been commonly applied as BACT in more recent permitting activities [e.g., Avenal Energy Project (CA), Colusa Generation Station (CA), Langley Gulch Power Plant (IN), Ninemile Point Electric Generating Plant (LA), King Power Station (TX) and Thomas C. Ferguson Power Station (TX)].

BACT Analysis for VOC

VOC emissions result from potentially unburned hydrocarbons. Due to the high combustion efficiency of the new turbines and the low non-methane content of the natural gas, these emissions are intrinsically low in gas turbines and duct burners.

BACT Step 1 – Identify All Available Control Technologies

Table 12–5 summarizes, in order of increasing efficiency, the available VOC control technologies listed for gas fired combined cycle units in the current RBLC database (refer to the end of this section).

Table 12–5 Natural Gas Fired Combined Cycle VOC Control Technologies

Control Technology	Description
Good Combustion Practices	Good combustion practices refer to design and operational practices that promote the complete combustion of the fuel, leading to lower VOC emissions, such as (1) efficient tuning of the air-to-fuel ratio in the combustion zone to allow minimal generation of unburned carbon; (2) proper combustor design that promotes air/fuel mixing and longer combustion chamber residence times, adequate temperature and turbulence; and (3) diligent maintenance and operation according to manufacturer's specifications.
Catalytic Oxidation	Though VOC reduction is not typically guaranteed, catalytic oxidation may promote further oxidation of unburned hydrocarbons, and hence reduce VOC emissions.

BACT Step 2 – Eliminate Technically Infeasible Options

None of the identified control technology options are technically infeasible.

BACT Step 3 – Rank Remaining Control Technologies

Good combustion practices and oxidation catalysts are both technically feasible technologies. Examples from the RBLC show VOC exhaust levels from 5 ppmvdc [e.g., Wallula Power Plant (WA)] to 1.3 ppmvdc [e.g. Florida Power & Light Martin Plant (FL)]. In combination with CO catalyst, the exhaust concentration may be further reduced to 1 ppmvdc. Consequently, the top level control is the combination of both technologies.

BACT Step 4 – Evaluate Most Effective Control Technologies

According to current data, the most effective control technology is the use and maintenance of good combustion practices in combination with the use of an oxidation catalyst.

BACT Step 5 – Select BACT

The Hobbs combined cycle units were equipped since construction with an oxidation catalyst and are routinely operated following good combustion practices to achieve a VOC emission rate of 1.0 ppmvdc daily rolling 24-hour average. These control technologies have been commonly applied as BACT in more recent permitting activities [e.g., Channel Energy Center LLC (TX), Deer Park Energy Center (TX) and ES Joslin Power Plant (TX)]

BACT Analysis for SO_2

SO_2 emissions from turbines and duct burners are the result of sulfur compounds contained in the combustion fuel. Total sulfur content in pipeline quality natural gas is inherently low, therefore significantly reducing the amount of SO_2 emissions generated in the combustion sources.

BACT Step 1 – Identify All Available Control Technologies

Table 12–6 summarizes, in order of increasing efficiency, the available SO_2 control technologies listed for gas fired combined cycle units in the current RBLC database (refer to the end of this section).

Table 12–6 Natural Gas Fired Combined Cycle SO_2 Control Technologies

Control Technology	Description
Good Combustion Practices	Good combustion practices refer to design and operational practices that promote the complete combustion of the fuel, leading to lower emissions, such as (1) efficient tuning of the air-to-fuel ratio in the combustion zone to allow minimal generation of unburned chemicals; (2) proper combustor design that promotes air/fuel mixing and longer combustion chamber residence times, adequate temperature and turbulence; and (3) diligent maintenance and operation according to manufacturer's specifications.
Use of Clean Fuel	Use of natural gas, pipeline quality natural gas, and California Public Utility Commission (PUC) quality natural gas(1) that contain very low amounts of sulfur compounds.

(1) PUC Quality Natural Gas: Any gaseous fuel, gas-containing fuel where the sulfur content is no more than 0.25 grain of hydrogen sulfide per 100 standard cubic feet and no more than 5 grains of total sulfur per 100 standard cubic feet. PUC quality natural gas also means high methane gas of at least 80% methane by volume

BACT Step 2 – Eliminate Technically Infeasible Options

None of the identified control technology options are technically infeasible.

BACT Step 3 – Rank Remaining Control Technologies

The top level control is considered to be the combination of good combustion practices and the use of clean fuel.

BACT Step 4 – Evaluate Most Effective Control Technologies

Good combustion practices and use of clean fuels represent the only demonstrated SO_2 control technology for turbines and duct burners firing natural gas. There is no economic penalty associated with these approaches. Good combustion practices and use of clean fuels are employed on combustion turbines throughout the US.

BACT Step 5 – Select BACT

Hobbs combined cycle units exclusively fire pipeline quality natural gas and will maintain good combustion practices. This fuel type as an SO_2 control technology has been commonly used as BACT in more recent permitting activities [e.g., Avenal Energy Project (CA), Colusa Generating Station (CA), Channel Energy Center (TX), Deer Park Energy Center (TX), ES Joslin Power Plant (TX) and Cheyenne Prairie Generating Station (WY)].

BACT Analysis for $PM_{10}/PM_{2.5}$

Particulate emissions from the turbines and duct burners result primarily from inert solids contained in the fuel, combustion air and water (when water injection is used), and from sulfur compounds and unburned fuel hydrocarbons that agglomerate to form particles. These particles pass through the system and are emitted with the exhaust gas. All particulates emitted by the turbines and duct burners are fine particulate, and essentially all will be less than 2.5 microns in size.

Particulate emissions from gas turbines and duct burners are inherently low when using clean fuels, such as natural gas. In addition, turbines are designed and operated to combust the fuel as completely as possible in order to attain the highest possible thermal efficiency, which maintains particulates at very low levels.

BACT Step 1 – Identify All Available Control Technologies

Table 12–7 summarizes, in order of increasing efficiency, the available $PM_{10}/PM_{2.5}$ control technologies listed for gas fired combined cycle units in the current RBLC database (refer to the end of this section).

Table 12–7 Natural Gas Fired Combined Cycle $PM_{10}/PM_{2.5}$ Control Technologies

Control Technology	Description
Good Combustion Practices	Good combustion practices refer to design and operational practices that promote the complete combustion of the fuel, leading to lower particulate emissions, such as (1) efficient tuning of the air-to-fuel ratio in the combustion zone to allow minimal generation of unburned carbon; (2) proper combustor design that promotes air/fuel mixing and longer combustion chamber residence times, adequate temperature and turbulence; and (3) diligent maintenance and operation according to manufacturer's specifications.
Use of Clean Fuel	Use of natural gas, pipeline quality natural gas, and California Public Utility Commission (PUC) quality natural gas(1) that contain very low amounts of sulfur compounds.

(1) PUC Quality Natural Gas: Any gaseous fuel, gas-containing fuel where the sulfur content is no more than 0.25 grain of hydrogen sulfide per 100 standard cubic feet and no more than 5 grains of total sulfur per 100 standard cubic feet. PUC quality natural gas also means high methane gas of at least 80% methane by volume

BACT Step 2 – Eliminate Technically Infeasible Options

None of the identified control technology options are technically infeasible.

BACT Step 3 – Rank Remaining Control Technologies

The top level control is considered to be the combination of good combustion practices and the use of clean fuel.

BACT Step 4 – Evaluate Most Effective Control Technologies

Good combustion practices and use of clean fuels represent the only demonstrated particulate control technology for turbines and duct burners firing gaseous fuels. There is no economic penalty associated with these approaches. Good combustion practices and use of clean fuels are employed on combustion turbines throughout the US.

BACT Step 5 – Select BACT

Hobbs combined cycle units exclusively fire pipeline quality natural gas and will maintain good combustion practices. This fuel type as a control technology has been commonly used as BACT in recent permitting activities [e.g., Avenal Energy Project (CA), Colusa Generating Station (CA), Channel Energy Center (TX), Deer Park Energy Center (TX), ES Joslin Power Plant (TX) and Cheyenne Prairie Generating Station (WY)].

BACT Analysis for GHG

The combustion of methane and other minor hydrocarbon constituents of the natural gas in the CTGs and duct burners will result in the generation of greenhouse gases (GHG) including carbon dioxide (CO_2) and small quantities of methane (CH_4) and nitrogen monoxide (N_2O). Other potential sources of GHG include auxiliary equipment, such as fugitive releases from natural gas components and SF_6 breaker insulation, which are not a part of this permitting action, and are therefore not addressed in this section.

BACT Step 1 – Identify All Available Control Technologies

Table 12–8 summarizes, in order of increasing efficiency, the available GHG control technologies listed for gas fired combined cycle units in the current RBLC database (refer to the end of this section).

Table 12–8 Natural Gas Fired Combined Cycle GHG Control Technologies

Control Technology	Description
Use of Combined Cycle Power Generation Technology	The most efficient way to generate electricity from a natural gas fuel source is the use of a combined cycle design, in which the HRSG is used to recover waste heat that would otherwise be lost to the atmosphere in the turbine exhaust. The recovered heat and produced steam allows generation of additional electric power by a steam turbine. The overall efficiency may be increased from about 30% for a simple cycle (no heat recovery) unit to about 50% for a combined cycle unit.
Use of Multiple Trains Combined Cycle Units	Combustion turbine efficiency is highest at full design load. The use of multiple trains (e.g. 2x1 configurations) allows one or more trains to be shut down while the remaining unit(s) operates at or near full load, where maximum efficiency is achieved, rather than operating a single unit at lower, less efficient loads to meet market demand. Due to the variability of electricity demand, this flexibility helps maintain operational efficiency.
Use of Natural Gas	Natural gas has the lowest carbon intensity among available fossil fuels. According to the comprehensive analysis by the Center of Climate and Energy Solutions ("Leveraging Natural Gas to Reduce Greenhouse Gas Emissions", June 2013[2]) on average, natural gas combustion releases approximately 50 percent less CO_2 than coal and 33 percent less CO_2 than oil (per unit of useful energy). Therefore, the burning of natural gas only will reduce the carbon footprint when compared to other fossil fuels available.
Gas Combustion Turbine Design	State-of-the-art combustion turbines operate at high temperatures due to the heat of compression and the thermal heat of combustion. The higher the operating temperature, the higher the turbine efficiency. To minimize the heat loss from the combustion turbines and protect the personnel and equipment around the units, insulation blankets are applied to the combustion turbine casing. These blankets minimize the heat loss through the combustion turbine shell. Improved design elements (e.g., two-bearing, axial exhaust, cold-end drive designs, etc.) have significantly increased overall combustion efficiency.
Fuel Pre-Heating	Thermal efficiency of the turbine can be increased by pre-heating the fuel prior to combustion. This is usually accomplished by heat exchange using steam from the HRSG or hot CTGs compressor bleed air.
Inlet Evaporative Cooling or Chillers	Use of inlet evaporative coolers or chillers reduces the inlet air temperature, during high ambient temperature conditions, increasing the air density and hence the mass flow through the combustion turbine increases. As the mass flow through the combustion turbine increases, more power is generated, hence the turbine efficiency increases.

Continues on the following page

g/publications/leveraging-natural-gas-reduce-greenhouse-gas-emissions

Table 12-8 – Natural Gas Fired Combined Cycle GHG Control Technologies (continued)

Control Technology	Description
Periodic Maintenance and Burner Tuning	Regularly scheduled maintenance programs are important for the reliable operation of the unit, as well as to maintain optimal efficiency. A periodic maintenance program consisting of inspection and cleaning of key equipment components and tuning of the combustion system will minimize performance degradation and recover thermal efficiency to the maximum extent possible.
Instrumentation and Control Systems	State-of-the-art combustion turbines have sophisticated instrumentation and control systems to automatically control the operation of the combustion turbine, including the fuel feed and burner operations to achieve low-NOx combustion. The control systems monitor the operation of the unit and modulate the fuel flow and turbine operation to achieve optimal high-efficiency low-emission performance for full load and part load conditions.
Minimizing HRSG Heat Transfer Surfaces Fouling	Fouling of interior and exterior surfaces of the HRSG heat exchanger tubes hinders the transfer of heat from the combustion turbine hot exhaust gases to the boiler feedwater. This fouling occurs from contaminants in the turbine inlet air and in the feedwater. Fouling is minimized by turbine inlet air filtration, maintaining proper feed water chemistry, and periodic maintenance, including cleaning the tube surfaces as needed during scheduled equipment outages. By reducing the fouling, the efficiency of the unit is maintained.
Steam Turbine Design	State-of-the-art steam turbines are designed to be highly efficient units. The overall efficiency of the unit is primarily affected by the inlet and outlet steam conditions, the blade ring design, the steam turbine seals and the generator efficiency. New unit designs achieve higher overall performance, reducing startup times significantly and consequently increasing the efficiency of the combined cycle unit as a whole.
Periodic Steam Turbine Maintenance	Regularly scheduled maintenance programs are important for the reliable operation of the unit, as well as to maintain optimal efficiency. A periodic maintenance program consisting of inspection and cleaning will minimize performance degradation and maintain optimal use of the steam that is delivered from the HRSG.
Add-On Controls	CO_2 Capture and Sequestration (CCS) is an emerging technology that consists of processes to capture (separate) CO_2 from the combustion exhaust gases and then transport it and inject it into geologic formations, such as oil and gas reservoirs, unminable coal seams, and underground saline formations. CCS could account for up to 90 percent[3] of the emissions mitigation needed to stabilize and ultimately reduce concentrations of CO_2.

BACT Step 2 – Eliminate Technically Infeasible Options

All options identified in Step 1, with the exception of CCS are considered technically feasible for the proposed combined cycle units and are common practice on state-of-the-art combined cycle units.

Although CCS is a promising technology, in order to enable widespread, safe and effective CCS, large-scale project studies still need to be completed to demonstrate that the capacity required for the purposes of GHG emissions mitigation at a typical power plant is met. The results from the RBLC database search show no such technology has yet been used for any natural gas fired combined cycle plant. Each component of CCS technology (i.e., capture, transport and storage) is discussed in the following paragraphs.

agency Task Force on Carbon Capture and Storage, August 2010

CO_2 Capture

CCS could become a viable emission management option as new CO_2 capture technologies are developed. According to the US Department of Energy National Energy and Technology Laboratory (DOE-NETL), a 2009 review of commercially available CO_2capture technologies presented that facilities capturing the highest volumes of CO_2 were all associated with gas streams containing relatively high concentrations of CO_2 (25 to 70 percent) such as natural gas processing operations and synthesis gas production. Capturing $CO_2$from more dilute streams, such as those generated from power production is less common as the following challenges are faced:

- CO_2 is present at low pressure (15-25 psia) and dilute concentrations (3-4 percent volume) from the gas-fired turbine exhaust stream. Therefore, a very high volume of gas must be available to achieve the CO_2 mass flow necessary to recover CO_2 at a cost efficiency comparable to an application such as natural gas processing.
- Trace impurities (particulate matter, sulfur dioxide, nitrogen oxides) in the exhaust gas can degrade sorbents and reduce the effectiveness of certain CO_2 capture processes.
- Compressing the captured CO_2 from atmospheric pressure to pipeline pressure (about 2,000 psia) presents a large auxiliary power load on the overall power plant system.

Current industrial processes generally involve gas streams that are much lower volumes than that required for the purposes of GHG emissions mitigation at a typical power plant. Scaling up these existing processes represents a significant technical challenge and a potential barrier to widespread commercial deployment in the near term. No references to natural gas fired power plants using CCS were identified.

The combustion of natural gas at Hobbs produces an exhaust gas with a maximum CO_2 concentration of 4.7 volume percent. This low concentration stream will require that a very high volume of gas be treated so that the CO_2 may be captured effectively. However, the CO_2 capture capacities used in current industrial processes are designed for relatively high CO_2 concentration streams (25 percent or higher), as discussed in the "Report of the Interagency Task Force on Carbon Capture and Storage" (August 2010)[4].

CO_2 Transport

Even if it is assumed that CO_2 capture could feasibly be achieved at Hobbs, the high-volume CO_2 stream generated (maximum 63,000 scf/min of CO_2) would need to be transported to a facility capable of storing it. **Figure 12.1** is a map showing the location of current CO_2 pipelines in the United States.

As shown on this map, there are existing pipelines that could potentially transport the CO_2 stream from Hobbs to a storage facility. The closest storage site to the proposed project, with some demonstrated capacity for geological storage of CO_2, is the Scurry Area Canyon Reef Operators (SACROC) oilfield near the eastern edge of the Permian Basin in Scurry County, Texas[5]. This site is over 135 miles away from Hobbs; therefore, a very long and sizable pipeline would be required to transport the large volume of high pressure CO_2 from the plant to the storage facility which will make CCS economically infeasible. Several other candidate storage reservoirs exist (see **Figure 12.2**); however, none have been confirmed to be viable for large scale CO_2 storage at this time.

[4] http://www.epa.gov/climatechange/Downloads/ccs/CCS-Task-Force-Report-2010.pdf
[5] http://www.beg.utexas.edu/gccc/sacroc.php

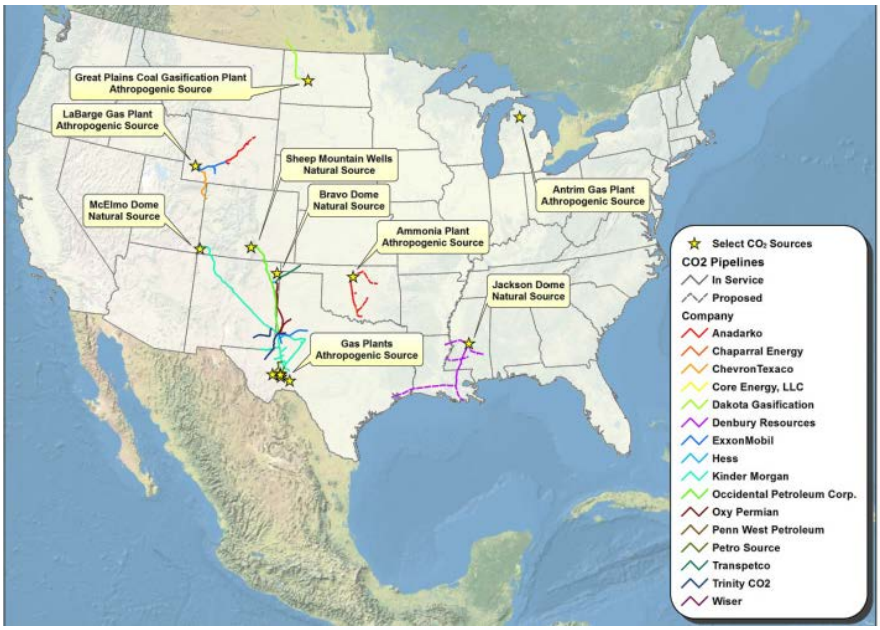

Figure 12.1 Existing and Planned CO_2 Pipelines in the United States
[Source: Report of the Interagency Task Force on Carbon Capture and Storage, Fig. B-1, August 2010]

CO_2 Storage

Even if it is assumed that CO_2 capture could feasibly be achieved for the proposed project and that the CO_2 could be transported economically, the feasibility of CCS would still depend on the availability of a long-term safe storage site.

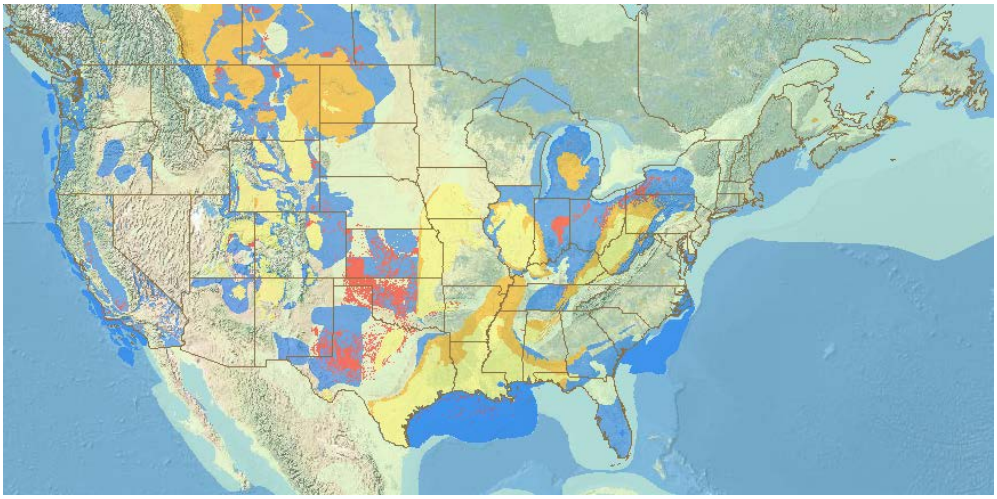

Figure 12.2 Basins Outlines in United States
[Source: NATCARB 2012 United States and Canadian Carbon Storage Atlas]

Ongoing regional-scale assessments suggest a large resource potential for storage in the United States. According to the DOE's Regional Carbon Sequestration Partnerships (RCSPS)[6] CO_2 storage resources including oil and gas reservoirs,

---

ɔe.gov/technologies/carbon_seq/natcarb/storage.html

unminable coal and saline formations in the Southwest Partnership (SWP) area[7] are within 2,952 billion metric tons (high estimate) and 417 billion metric tons (low estimate). **Figure 12.2** shows the Basins outlines in the United States, as provided by NATCARB 2012 United States and Canadian Carbon Storage Atlas.

According to the conclusions of the "Report of the Interagency Task Force on Carbon Capture and Storage" (August 2010)[8], to enable widespread, safe, and effective CCS, CO_2 storage should continue to be field-demonstrated for a variety of geologic reservoir classes, with large-scale projects targeted at high-priority reservoir classes and smaller-scale projects covering a wider range of classes that are important regionally.

Small and large-scale field tests in different geological storage classes are being conducted to confirm that CO_2 capture, transportation, and storage can be achieved safely, permanently, and economically. Results from these tests will provide a more thorough understanding of migration and permanent storage of CO_2 within various open and closed depositional systems. The storage types and formations being tested are considered regionally significant and are expected to have the potential to store hundreds of years of CO_2 stationary source emissions.

Accounting that permanent CO_2 storage in geologic formations may not be a viable option for all CO_2 emitters and that this option could result in no environmental benefit at significant cost, the DOE-NETL[9] is also researching the development of alternatives that can use captured CO_2or convert it to a useful product, such as a fuel, chemical, or plastic, with revenue from the CO_2 use offsetting a portion of the CO_2 capture cost.

Based on the reasons provided above, CCS has only been effectively proven in small scale projects in specific regions, and is therefore considered technically infeasible for this project.

BACT Step 3 – Rank Remaining Control Technologies

The technically feasible options for GHG emission mitigation in order of most to least effective include:

- Use of combined cycle power generation technology;
- Use of natural gas;
- Instrumentation and control systems;
- Gas combustion turbine design;
- HRSG design;
- Minimizing HRSG heat transfer surfaces fouling;
- Inlet evaporative cooling or chillers;
- Fuel pre-heating;
- Use of multiple trains combined cycle units; and
- Periodic maintenance and burner tuning.

[7] The SWP on Carbon Sequestration area includes Arizona, Utah, South Wyoming, Colorado, New Mexico, West Texas, Oklahoma and Kansas.
http://www.southwestcarbonpartnership.org/index.php?option=com_content&view=article&id=71&Itemid=435
[8] http://www.epa.gov/climatechange/Downloads/ccs/CCS-Task-Force-Report-2010.pdf
[9] http://www.netl.doe.gov/technologies/iccs/index.html

BACT Step 4 – Evaluate Most Effective Control Technologies

All of the technically feasible technologies discussed in Step 1 through Step 3 are being proposed for this project. Therefore, an examination of the energy, environmental, and economic impacts of the efficiency designs is not necessary for this application.

BACT Step 5 – Select BACT

Hobbs proposes as BACT for the combined cycle units the following energy efficiency processes, practices and designs:

- Use of combined cycle power generation technology;
- Use of pipeline quality natural gas only to fire both the CGTs and the HRSG duct burners;
- Use of 2x1 configuration, allowing operation with one train full load or two trains full load on demand basis;
- Combustion turbine energy efficiency processes, practices and designs, including:
    - Efficient design of the turbine compressor, combustor, and blades.
    - Periodic gas turbine burner tuning, following vendor's recommended comprehensive inspection and maintenance programs.
    - Reduction of heat loss.
    - Instrumentation and controls, including − fuel gas flow rate; exhaust gas temperature monitoring; turbine package temperature and pressure monitoring; combustion dynamics monitoring, vibration monitoring; air/fuel ratio monitoring; and HRSG temperature and pressure monitoring.
    - Inlet chillers.

- HRSG Energy Efficiency Process, Practices and Designs:
    - Efficient heat exchanger design
    - Insulation of HRSG
    - Minimizing fouling of heat exchange surfaces, implementing vendor's recommended comprehensive inspection and maintenance program
- Calibrate and perform preventive maintenance on the fuel flow meters as required by 40 CFR Part 75, Appendix D, Section 2.1.6 (Quality Assurance);
- Maintain an unfired adjusted base load nominal output heat rate of approximately 6,709 Btu/kWh (HHV), for a 2x1 configuration, expressed on a 12-month rolling average basis for the proposed combined cycle units. The 6,709 Btu/kWh heat rate incorporates a margin factor to account for design margin and degradation of the equipment. This heat rate is equivalent to an output based CO_2 rate of 691 lb_{CO2}/MWh (gross), which meets the US EPA proposed new fossil-fuel-fired power plant output-based standard of 1,000 lb CO_2/MWh gross[10].

The proposed efficiency performance standard has been calculated based on the net heat rate provided by the vendor specifications without duct firing. **Table 12–9** compares this rate with those proposed on recently permitted facilities with similar characteristics.

[10] US EPA fact sheet on "Proposed Carbon Pollution Standard for New Power Plants", onpollutionstandard/pdfs/20120327factsheet.pdf

Table 12–9 Proposed Efficiency Standards for Facilities Recently Permitted by US EPA Region 6

Project	Performance Standard (Btu/kWh)	Comments
Hobbs Power Station	6,709 (HHV)	Combined cycle units base load without duct firing, 2x1 configuration (Mitsubishi M501F4)
LCRA Thomas Ferguson	7,720 (LHV)	Combined cycle units w/o duct burners, GE7A or Siemens SGT6-5000F
Calpine Channel Energy Center	6,852 (HHV)	Combined cycle cogeneration units without duct firing. Siemens 501FD3
Calpine Deer Park Energy Center	7,730 (HHV)	Combined cycle cogeneration units without duct firing. Siemens 501FD3

BACT Analysis for NH_3

The use of SCR results in ammonia emissions from each unit. Ammonia slip results because it is impossible to provide perfect mixing or an infinite residence time for chemical reaction between the ammonia and the nitrogen oxides. Theoretically, given perfect conditions, the stoichiometric amount of ammonia could be added, resulting in complete reaction of all NOx and all ammonia molecules. In reality, because of imperfect conditions and variable turbine operating conditions, a stoichiometric excess of ammonia must be added to meet target NOx emissions. This stoichiometric excess is emitted from the stack as ammonia slip. Thus, there is an approximate inverse relationship between effluent NOx and ammonia concentrations. The only practical way to reduce ammonia slip is to increase the effluent NOx.

The ammonia emissions resulting from the use of SCR may have an environmental impact through their potential to form secondary particulate matter such as ammonium sulfate and ammonium nitrate. Because of the complex nature of the chemical reactions and dynamics involved in the formation of secondary particulates, it is difficult to estimate the amount of secondary particulate matter that will be formed from the emission of a given amount of ammonia.

The Hobbs ammonia slip from the SCR systems is controlled to be 10 ppmvdc. This emission limit corresponds to proper operation of the SCR system and meets BACT guidelines. The RBLC database search shows ammonia slip levels between 5 ppmvdc [e.g., Wallula Power Plant (WA), Sumas Energy Generation Facility (W), BP Cherry Point Cogeneration Project (WA)] and 10 ppmvdc [e.g., El Dorado Energy (NV), Ivanpah Energy Center (NV)]. A minimum level of 2 ppmvdc is claimed at Kleen Energy Systems (CT), when burning natural gas at steady state, with 5.0 ppmvd when burning natural gas in transient operations (580 MW nominal natural gas fired power plant with No. 2 oil backup).

BACT Analysis for SSM

Turbine startup and shutdown emission rates are quantified separately from those of routine operations, as described in **Section 6**. The SCR system and the CO catalyst used on the CTG/HRSG units will not initially reduce NOx, CO and VOC emissions since the systems must heat up to achieve the normal operating efficiencies. Hobbs is operated to minimize the duration of the startups to the extent possible for each turbine unit. The emissions from startups and shutdowns will be limited to the rates described in **Section 6** and presented in UA2 Form to satisfy the BACT requirements.

12.B.2 Visibility Impairment Analysis

Visibility impairment may occur as a result of the scattering and absorption of light by particles and gases in the atmosphere. To assess the potential impact on Class I and Class II areas, industrial facilities are required to complete a visibility impairment analysis for their proposed sources.

Three Class I areas—the Carlsbad Caverns National Park (CCNP), Guadalupe Mountains National Park (GMNP) and Salt Creek Wilderness Area (SCWA) are located within 150 kilometers of the Hobbs Power Plant. Correspondence with the National Park Service (NPS) and with the U.S. Fish and Wildlife Service (USFWS), during initial construction permitting process (October 2006), concur that a Class I Impact Analysis was not required due to the distance to these areas.

A visibility analysis for the nearby Harry McAdams State Park was conducted during the initial permitting process. Hobbs used EPA's Plume Visual Impact Screening Model (VISCREEN) to evaluate the potential impact on visibility due to the short term emissions of particulate matter and nitrogen oxides (NOx) in the Class II area surrounding the facility. The visual impact from the Hobbs project at the State Park northwest of the City of Hobbs resulted in a maximum ΔE value of 1.981, which was below the Class I limit of 2.00. Given the low modeled impact on the state park, it was concluded that no significant visibility impact was to occur due to the Hobbs project in this park area. Since the proposed upgrade of the turbines will not increase short term emission rates for particulate matter or NOx, above currently authorized limits (which were used on the VISCREEN model in 2006), impact on visibility will not be affected by the proposed project and no further analysis is deemed necessary.

12.B.3 Soil and Vegetation Analyses

Sensitive soil and vegetation may be affected by the emission of certain air pollutants and consequently soil and vegetation analyses are required for the development of any emission source. EPA developed the secondary NAAQS as a reference value for the protection from environmental damage that could be caused by certain air pollutants, including NOx, particulate matter and sulfur dioxide (SO_2). It is considered that most soil types and vegetation will not be harmed by ground-level concentrations below the secondary NAAQS.

During the Hobbs initial construction permitting process (October 2006), modeled ground-level concentrations were found be below the secondary NAAQS for all evaluated pollutants and, therefore, it was concluded that the Hobbs project would not negatively impact the surrounding soils and vegetation.

The proposed upgrade of the turbines will not increase emission rates for particulate matter or SO_2 above currently authorized limits (which were used on the ISCST3 air dispersion modeled in the 2006 permitting process). Therefore the 2006 soil and vegetation analyses are considered adequate and no further analyses are deemed necessary.

As detailed in Section 6, NOx short-term emission rates will not be increased above the currently permitted levels due to the proposed turbine upgrade. However, there will be an increase in annual emission rates. This increase is due to a misrepresentation in the 2006 permitting process that accounted for full operation of the SCR during startup and shutdown periods. This is not operationally possible and hence by means of this application, Hobbs is requesting a correction of the annual emission rates.

According to the 2006 permit application documents, the NOx annual emission rate was 150.0 tpy and the modeled ground-level concentration was 0.40 $\mu g/m^3$. Adjusting this impact level to the proposed emission rate increase results in a ground-level concentration of 0.49 $\mu g/m^3$. The secondary NAAQS for NOx is 53 ppb (99.7 $\mu g/m^3$). Therefore, the proposed project will not negatively impact the surrounding soils and vegetation.

12.B.4 Water Consumption and Quality Analysis

The proposed turbine upgrade will not require an increase in the number of regular staff that operates and maintains the facility, nor will it require any additional industrial development. Therefore, the proposed project is not expected to have any effect on the water consumption or the quality of the water.

Section 13
Discussion Demonstrating Compliance with Each Applicable State & Federal Regulation

Provide a discussion demonstrating compliance with applicable state & federal regulation. If there is a state or federal regulation (other than those listed here) for your facility's source category that does not apply to your facility, but seems on the surface that it should apply, add the regulation to the appropriate table below and provide the analysis. Examples of regulatory requirements that may or may not apply to your facility include 40 CFR 60 Subpart OOO (crushers), 40 CFR 63 Subpart HHH (HAPs), or 20.2.74 NMAC (PSD major sources). We don't want a discussion of every non-applicable regulation, but if there is questionable applicability, explain why it does not apply. All input cells should be filled in, even if the response is 'No' or 'N/A'.

In the "Justification" column, identify the criteria that are critical to the applicability determination, numbering each. For each unit listed in the "Applies to Unit No(s)" column, after each listed unit, include the number(s) of the criteria that made the regulation applicable. For example, TK-1 & TK-2 would be listed as: TK-1 (1, 3, 4), TK-2 (1, 2, 4). Doing so will provide the applicability criteria for each unit, while also minimizing the length of these tables.

As this table will become part of the SOB, please do not change the any formatting in the table, especially the width of the table.

If this application includes any proposed exemptions from otherwise applicable requirements, provide a narrative explanation of these proposed exemptions. These exemptions are from specific applicable requirements, which are spelled out in the requirements themselves, not exemptions from 20.2.70 NMAC or 20.2.72 NMAC.

Table 13–1 demonstrates compliance with each applicable State Regulations.

Table 13–1 Applicable State Regulations

STATE REGU-LATIONS CITATION	Title	Applies to Entire Facility	Applies to Unit No(s).	Federally Enforce-able	Does Not Apply	JUSTIFICATION: Identify the applicability criteria, numbering each (i.e. 1. Post 7/23/84, 2. 75 m^3, 3. VOL)
20.2.3 NMAC	Ambient Air Quality Standards NMAAQS	X	All	Yes		20.2.3 NMAC is a SIP approved regulation that limits the maximum allowable concentration of Total Suspended Particulates, Sulfur Compounds, Carbon Monoxide and Nitrogen Dioxide.
20.2.7 NMAC	Excess Emissions	X	All	Yes		All Title V major sources are subject to Air Quality Control Regulations, as defined in 20.2.7 NMAC, and are thus subject to the requirements of this regulation. Also listed as applicable in NSR Permit PSD 3449-R6.
20.2.33 NMAC	Gas Burning Equipment - Nitrogen Dioxide		DB-1, DB-2	Yes		Hobbs duct burners are new gas burning equipment with a heat input greater than 1,000,000 MMBtu/yr per unit. Hobbs fuel gas heaters are new gas burning equipment with a heat input less than 1,000,000 MMBtu/yr, therefore this part does not apply to these equipment. Note: "New gas burning equipment" means gas burning equipment, the construction or modification of which is commenced after February 17, 1972.
20.2.34 NMAC	Oil Burning Equipment: NO_2	N/A	N/A	Yes	X	Not applicable. This facility has no oil burning equipment having a heat input of greater than 1,000,000 MMBtu/yr per unit.
20.2.35 NMAC	Natural Gas Processing Plant – Sulfur	N/A	N/A	N/A	X	Not applicable. Hobbs is not a Natural Gas Processing Plant; therefore, it is not subject to the requirements of 20.2.35 NMAC.

STATE REGU-LATIONS CITATION	Title	Applies to Entire Facility	Applies to Unit No(s).	Federally Enforce-able	Does Not Apply	JUSTIFICATION: Identify the applicability criteria, numbering each (i.e. 1. Post 7/23/84, 2. 75 m^3, 3. VOL)
20.2.37 NMAC	Petroleum Processing Facilities	N/A	N/A	No	X	Not applicable. Hobbs is not a Petroleum Processing Facility; therefore, it is not subject to the requirements of 20.2.37 NMAC.
20.2.38 NMAC	Hydrocarbon Storage Facilities	N/A	N/A	No	X	Not applicable. Hobbs does not have hydrocarbon storage tanks with a capacity of 20,000 gallons or greater, nor does it contain a "tank battery" or "Storage facility".
20.2.39 NMAC	Sulfur Recovery Plant - Sulfur	N/A	N/A	No	X	Not applicable. Hobbs is not a Sulfur Recovery Plant.
20.2.61.109 NMAC	Smoke & Visible Emissions		HOBB-1, HOBB-2, DB-1, DB-2, FH-1, FH-2, FH-3, G-1 and FP-1	No		Hobbs CTGs, HRSG duct burners, fuel gas heaters, standby generator and diesel fire pump will not cause visible emissions to equal or exceed an opacity of 20%.
20.2.70 NMAC	Operating Permits	X	All	Yes		Hobbs operates under Operating Permit No. P244-M4. The facility is a major source for NOx, CO, $PM_{10}/PM_{2.5}$ and CO_2e.
20.2.71 NMAC	Operating Permit Fees	X	All	Yes		Hobbs is subject to 20.2.70 NMAC and is in turn subject to 20.2.71 NMAC.
20.2.72 NMAC	Construction Permits	X	All	Yes		Hobbs is subject to 20.2.72 NMAC and NSR Permit number: PSD 3449-R6.
20.2.73 NMAC	NOI & Emissions Inventory Requirements	X	All	Yes		**Emissions Inventory Reporting:** 20.2.73.300 NMAC applies. All Title V major sources meet the applicability requirements of 20.2.73.300 NMAC.
20.2.74 NMAC	Permits – PSD	X	All	Yes		Hobbs is a PSD major source as defined by: (1) Any stationary source listed in 20.2.74.501 NMAC Table 1 (i.e., fossil fuel-fired steam electric facilities greater than 250 MMBtu) which emits, or has the potential to emit, emissions equal to or greater than 100 tons per year of any regulated pollutant.
20.2.75 NMAC	Construction Permit Fees	X	All	Yes		This facility is subject to 20.2.72 NMAC and is in turn subject to 20.2.75 NMAC. N/A if subject to 20.2.71 NMAC.
20.2.77 NMAC	New Source Performance		HOBB-1, HOBB-2, G-1	Yes		Hobbs is a stationary source subject to the requirements of 40 CFR Part 60, as amended through September 23, 2013.
20.2.78 NMAC	Emission Standards for HAPS	X	N/A	Yes	X	Under normal operating conditions the site is not subject to 40 CFR Part 61.
20.2.79 NMAC	Permits – Nonattainment Areas	N/A	N/A	Yes	X	Not applicable. Hobbs is located in Lea County, an attainment area for all regulated pollutants.
20.2.80 NMAC	Stack Heights	N/A	N/A	Yes	X	Usually not applicable for TV Not cited as applicable in NSR Permit PSD 3449-R6.

STATE REGU-LATIONS CITATION	Title	Applies to Entire Facility	Applies to Unit No(s).	Federally Enforce-able	Does Not Apply	JUSTIFICATION: Identify the applicability criteria, numbering each (i.e. 1. Post 7/23/84, 2. 75 m^3, 3. VOL)
20.2.82 NMAC	MACT Standards for source categories of HAPS		G-1, FP-1	Yes		Hobbs is a minor source of hazardous air pollutants. The standby generator and fire water pump are subject to 40 CFR 63 Subpart ZZZZ.

Table 13–2 demonstrates compliance with each applicable Federal Regulations.

Table 13–2 Applicable Federal Regulations

FEDERAL REGU-LATIONS CITATION	Title	Applies to Entire Facility	Applies to Unit No(s).	Federally Enforce-able	Does Not Apply	JUSTIFICATION:
40 CFR 50	NAAQS	X	N/A	Yes		Defined as applicable at 20.2.70.7.E.11. Any national ambient air quality standard. Not directly applicable to individual emission sources.
NSPS 40 CFR 60, Subpart A	General Provisions		HOBB-1, HOBB-2, DB-1, DB-2, G-1	Yes		Hobbs CTGs and HRSG duct burners are subject to 40 CFR 60 Subpart KKKK. Hobbs standby generator is subject to 40 CFR 60 Subpart IIII; therefore these units are also subject to 40 CFR 60 Subpart A - General Provisions.
NSPS 40 CFR 60 Subpart Da	Electric Utility Steam Generating Units	N/A	N/A	Yes	X	Not applicable. Emissions from the HRSG duct burners are subject to 40 CFR 60 Subpart KKKK and therefore are exempt from the requirements of Subpart Da.
NSPS 40 CFR 60 Subpart Db	Electric Utility Steam Generating Units	N/A	N/A	Yes	X	Not applicable. Emissions from the HRSG duct burners are subject to 40 CFR 60 Subpart KKKK and therefore are exempt from the requirements of Subpart Db.
NSPS 40 CFR 60, Subpart Ka	Storage Vessels for Petroleum Liquids for which Construction, Reconstruction, or Modification Commenced After May 18, 1978, and Prior to July 23, 1984	N/A	N/A	Yes	X	Not applicable. Hobbs has no petroleum liquid storage vessels.
NSPS 40 CFR 60, Subpart Kb	Volatile Organic Liquid Storage Vessels (Including Petroleum Liquid Storage Vessels) for Which Construction, Reconstruction, or Modification Commenced After July 23, 1984	N/A	N/A	Yes	X	Not applicable. Hobbs does not have storage vessels with a capacity greater than or equal to 75 cubic meters that is used to store volatile organic liquids (VOL) for which construction, reconstruction, or modification is commenced after July 23, 1984.

FEDERAL REGU-LATIONS CITATION	Title	Applies to Entire Facility	Applies to Unit No(s).	Federally Enforce-able	Does Not Apply	JUSTIFICATION:
NSPS 40 CFR 60 Subpart GG	Stationary Gas Turbines	N/A	N/A	Yes	X	Units HOBB-1 and HOBB-2 have a heat input equal to 1.585.1 MMBtu/hour nominal, which is greater than the 10 MMBtu/hour threshold. These units were manufactured on 2007 which is after the October 3, 1977 applicability date.
NSPS 40 CFR 60, Subpart KKK	Leaks of VOC from Onshore Gas Plants	N/A	N/A	Yes	X	Not applicable. Hobbs is not an Onshore Gas Plant.
NSPS 40 CFR 60 Subpart LLL	Standards of Performance for Onshore Natural Gas Processing: SO_2 Emissions	N/A	N/A	Yes	X	Not applicable. Hobbs is not an Onshore Natural Gas Processing plant.
NSPS 40 CFR 60, Subpart IIII	Stationary Compression Ignition Internal Combustion Engines		G-1	Yes		Hobbs Diesel Standby Generator was manufactured after July 1, 2006 and is not a fire pump engine. Therefore this unit is subject to the provisions of NSPS IIII, (§60.4200(a)(2)(i)). Hobbs Diesel Fire Water Pump, was manufactured and constructed in 2011, before all applicable trigger dates in the rule; therefore it is not subject to NSPS IIII.
NSPS 40 CFR 60, Subpart KKKK	Stationary Combustion Turbines		HOBB-1, HOBB-2, DB-1, DB-2			HOBB-1 and HOBB-2 are stationary combustion turbines with a heat input at peak load greater than 10 MMBtu/hr (HHV) and commenced construction after February 18, 2005. Therefore the units are subject to the provisions of NSPS KKKK. The HRSG duct burners, though not accounted the peak heat input, are also subject to the provisions of NSPS KKKK.
NSPS 40 CFR 60 Subpart OOOO	Crude Oil and Natural Gas Production, Transmission, and Distribution	N/A	N/A	Yes	X	Not applicable. Hobbs is not a Crude Oil and Natural Gas Production, Transmission and Distribution facility.
NESHAP 40 CFR 61 Subpart A	General Provisions	X Potentially	Asbestos Demolition	Yes		Potentially Hobbs could be subject to 40 CFR 61 Subpart M. Refer to discussion below.
NESHAP 40 CFR 61 Subpart E	National Emission Standards for **Mercury**	N/A	N/A	Yes	X	Not applicable. This facility does not process mercury.
NESHAP 40 CFR 61 Subpart M	National Emission Standards for Asbestos	X Potentially	Asbestos Demolition	Yes		Not applicable during routine operation conditions. In the case of asbestos demolition, NESHAP M will apply.
NESHAP 40 CFR 61 Subpart V	National Emission Standards for Equipment Leaks (Fugitive Emission Sources)	N/A	N/A	Yes	X	Not applicable. Hobbs does not operate any sources in volatile hazardous air pollutant (VHAP) service.
MACT 40 CFR 63, Subpart A	General Provisions		G-1 FP-1	Yes		Hobbs Diesel Standby Generator and Diesel Fire Water Pump are subject to MACT Subpart ZZZZ, therefore must comply with the requirements of MACT Subpart A.

FEDERAL REGU-LATIONS CITATION	Title	Applies to Entire Facility	Applies to Unit No(s).	Federally Enforce-able	Does Not Apply	JUSTIFICATION:
MACT 40 CFR 63.760 Subpart HH	Oil and Natural Gas Production Facilities	N/A	N/A	Yes	X	Not applicable. Hobbs is not an Oil and Natural Gas Production facility.
MACT 40 CFR 63 Subpart HHH	Natural Gas Transmission and Storage Facilities	N/A	N/A	Yes	X	Not applicable. Hobbs is not a natural gas transmission and storage facility.
MACT 40 CFR 63 Subpart ZZZZ	Stationary Reciprocating Internal Combustion Engines (RICE MACT)		G-1 FP-1	Yes		Hobbs Diesel Standby Generator (G-1) is a new (emergency) stationary RIC at an area source of HAPs. Per §63.6590(c)(1), G-1 must meet the requirements of MACT ZZZZ by meeting the requirements of NSPS IIII. Hobbs Diesel Fire Water Pump (FP-1) is an existing emergency RICE at an area source of HAPs and must comply with the requirements of MACT ZZZZ as of May 3, 2013.
NESHAP 40 CFR 64	Compliance Assurance Monitoring	N/A	N/A	Yes	X	Hobbs CTGs/HRSG exhaust stacks are equipped with CEMS that satisfy CAM exemption requirements (§64.2(b)(1)(vi)).
NESHAP 40 CFR 68	Chemical Accident Prevention	N/A	N/A	Yes	X	Not applicable. Hobbs does not manufacture, process, use, store, or otherwise handle regulated substances in excess of the quantities specified in 10 CFR 68.
Title IV – Acid Rain 40 CFR 72	Acid Rain		HOBB-1, HOBB-2	Yes		Hobbs CTGs are subject to the requirements of the Acid Rain Program.
Title IV – Acid Rain 40 CFR 73	Sulfur Dioxide Allowance Emissions		HOBB-1, HOBB-2	Yes		Hobbs must obtain SO_2 calendar year allowances.
Title IV – Acid Rain 40 CFR 75	Continues Emission Monitoring (CEM)		HOBB-1, HOBB-2	Yes		Hobbs CTG/HRSG exhaust stack is equipped with CEMS for NOx, CO and O_2.
Title IV – Acid Rain 40 CFR 76	Acid Rain Nitrogen Oxides Emission Reduction Program		N/A	Yes	X	Hobbs is not subject to the acid rain nitrogen oxides emission reduction program.
Title VI – 40 CFR 82	Protection of Stratospheric Ozone	X	N/A	Yes		Hobbs equipment includes appliances containing CFCs and is therefore subject to the requirements of 40 CFR 82. Hobbs uses only certified technicians for the maintenance, service, repair and disposal of these appliances and maintains the appropriate records.

Section 14
Operational Plan to Mitigate Emissions

(submitting under 20.2.70, 20.2.72, 20.2.74 NMAC)

☐ **Title V Sources** (20.2.70 NMAC)**:** By checking this box and certifying this application the permittee certifies that it has developed an **Operational Plan to Mitigate Emissions During Startups, Shutdowns, and Emergencies** defining the measures to be taken to mitigate source emissions during startups, shutdowns, and emergencies as required by 20.2.70.300.D.5(f) and (g) NMAC. This plan shall be kept on site to be made available to the Department upon request. This plan should not be submitted with this application.

☒ **NSR** (20.2.72 NMAC)**, PSD** (20.2.74 NMAC) **& Nonattainment** (20.2.79 NMAC) **Sources:** By checking this box and certifying this application the permittee certifies that it has developed an **Operational Plan to Mitigate Source Emissions During Malfunction, Startup, or Shutdown** defining the measures to be taken to mitigate source emissions during malfunction, startup, or shutdown as required by 20.2.72.203.A.5 NMAC. This plan shall be kept on site to be made available to the Department upon request. This plan should not be submitted with this application.

☒ **Title V** (20.2.70 NMAC)**, NSR** (20.2.72 NMAC)**, PSD** (20.2.74 NMAC) **& Nonattainment** (20.2.79 NMAC) **Sources:** By checking this box and certifying this application the permittee certifies that it has established and implemented a Plan to Minimize Emissions During Routine or Predictable Startup, Shutdown, and Scheduled Maintenance through work practice standards and good air pollution control practices as required by 20.2.7.14.A and B NMAC. This plan shall be kept on site or at the nearest field office to be made available to the Department upon request. This plan should not be submitted with this application.

Startup and shutdown procedures are either based on manufacturer's recommendations or based on Hobbs experience. These procedures are designed to proactively address the potential for malfunction to the greatest extent possible. These procedures dictate a sequence of operations that are designed to minimize emissions from the facility during events that result in shutdown and subsequent startup.

Hobbs equipment incorporates various safety devices and features that aid in the prevention of excess emissions in the event of an operational emergency. If an operational emergency does occur and excess emissions occur, Hobbs will submit the required Excess Emissions Report as per 20.2.7 NMAC if any excess emissions occur beyond the requested total allowed SSM emission limit. Corrective action to eliminate the excess emissions and prevent recurrence in the future will be undertaken as quickly as safety allows.

Section 15
Alternative Operating Scenarios

(submitting under 20.2.70, 20.2.72, 20.2.74 NMAC)

Alternative Operating Scenarios: Provide all information required by the department to define alternative operating scenarios. This includes process, material and product changes; facility emissions information; air pollution control equipment requirements; any applicable requirements; monitoring, recordkeeping, and reporting requirements; and compliance certification requirements. Please ensure applicable Tables in this application are clearly marked to show alternative operating scenario.

Hobbs Generating Station does not have an alternative operating scenario at this time.

Section 16
Air Dispersion Modeling

NSR (20.2.72 NMAC) and PSD (20.2.74 NMAC) Modeling: Provide an air quality **dispersion modeling** demonstration (if applicable) as outlined in the Air Quality Bureau's Dispersion Modeling Guidelines. If air dispersion modeling has been waived for this permit application, attach the AQB Modeling Section modeling waiver documentation.

SSM Modeling: Applicants must conduct dispersion modeling for the total short term emissions using realistic worst case scenarios following guidance from the Air Quality Bureau's dispersion modeling section. Refer to "Guidance for Submittal of Startup, Shutdown, Maintenance Emissions in Permit Applications (http://www.nmenv.state.nm.us/aqb/permit/app_form.html) for more detailed instructions on SSM emissions modeling requirements.

Title V (20.2.70 NMAC) Modeling: Title V applications must specify the NSR Permit number for which air quality dispersion modeling was last submitted. Additionally, Title V facilities reporting new SSM emissions require modeling or a modeling waiver to demonstrate compliance with standards.

A modeling waiver was requested for the proposed modification to the Hobbs CTGs (attached). An air dispersion modeling analysis will be promptly forwarded if the waiver request is denied.

New Mexico Environment Department Air Quality Bureau Modeling Section 525 Camino de Los Marquez - Suite 1 Santa Fe, NM 87505 Phone: (505) 476-4300 Fax: (505) 476-4375 www.nmenv.state.nm.us/aqb		**For Department use only:** Approved: ☐ **Yes** ☐ **No** Date: Approved by:

Air Dispersion Modeling Waiver Request Form

This form must be completed and submitted with all air dispersion modeling waiver requests.

If a permit is required, modeling is normally required for all pollutants, including state air toxics. In some cases, the demonstration that ambient air quality standards and PSD increments will not be violated can be satisfied with a discussion of previous modeling. The purpose of this form is to document and streamline requests to limit the new modeling that is submitted with an application. A waiver may be requested by e-mailing the completed form to the modeling manager, sufi.mustafa@state.nm.us. Permitting staff must approve the total emission rates during the permitting process for this waiver to be valid.

Contact and facility information:

Contact name	Mona Caesar Johnson, P.E.
E-mail Address:	mjohnson@camsesparc.com
Phone	(281) 333-3339 x 201
Facility Name	Hobbs Generating Station
Air Quality Permit Number(s)	PSD 3449-M4
AI Number (if known)	25726

This application proposes a significant revision to NSR Permit PSD 3449-R6 for Lea Power Partners, LLC (LPP) Hobbs Generating Station (Hobbs).

Hobbs is a natural gas fueled, nominal 600 MW gross output power plant with two advanced firing temperature, Mitsubishi 501F combustion turbine generators (CTGs), each provided with its own heat recovery steam generator (HRSG) including duct burners, a single condensing, reheat steam turbine generator (STG), and an air cooled condenser serving the STG. The plant generates electricity for sale to Southwestern Public Service Company, its successors or assigns. The facility is located approximately 9 miles west of Hobbs, New Mexico in Lea County.

To provide an increase in power of approximately 5% to 6% (gas turbine only), Hobbs is proposing to upgrade both CTGs with new parts that have superior cooling technology. The following turbine components are to be installed as replacements for the existing turbine components of the same description: Row 1 Blade Ring with E-Seals, Row 1 Compressor Blades, Row 1 Turbine Blades, Row 2 Turbine Blades, Row 3 Turbine Blades, Row 1 Vanes, Row 2 Vanes, Row 4 Vanes, Row 1 Ring Segments, and Row 2 Ring Segments. This change will result in the need for less cooling air and will have a corresponding increase in fuel consumption, exhaust flow rate, temperature, and electricity production.

Stack exhaust nitrogen oxides (NO_X) emissions will continue to be controlled to 2 parts per million volume dry basis corrected to 15 percent oxygen (ppmvdc) on a 24-hour average basis, using selective catalytic reduction (SCR) with aqueous ammonia (NH_3). Stack exhaust carbon monoxide (CO) and volatile organic compounds (VOC) emissions will continue to be controlled to 2 ppmvdc on a 1-hour average basis and to 1 ppmvdc on a 24-hour average basis, respectively, by means of an oxidation catalyst. Stack exhaust sulfur dioxide (SO_2) emissions will continue to be controlled by exclusively firing pipeline quality natural gas. Although NO_X, CO and VOC concentrations from the turbine exhaust will remain constant, there will be an

increase in actual mass emission rates of these pollutants due to the increased exhaust flow rate compared to historical past actual emission rates. Increases in particulate matter (PM_{10} and $PM_{2.5}$) and SO_2, are also expected due to the increased fuel consumption.

Section 1: Toxic air pollutants

(If the facility has no toxic air pollutants, note that here and delete the rest of Section 1.)

Modeling must be provided for any toxic air pollutant with a facility-wide controlled emission rate in excess of the emission levels specified in **20.2.72.502 NMAC** - Permits for Toxic Air Pollutants. Sources may use a correction factor based on release height for the purpose of determining whether modeling is required. Divide the emission rate for each release point by the correction factor for that release height and add the total values together to determine the total adjusted emission rate. If the total adjusted emission rate is lower than the emission rate screening level, then modeling is not required.

In the table below, list all of the State air toxics that are emitted at the facility. The table is pre-populated with common examples. Extra rows may be added for toxics not listed or for toxics emitted from multiple stack heights. Toxics not present at the facility may be deleted, left blank, or noted as 0 emission rate. Toxics previously modeled may be addressed in Section 3. Correction factors are listed in Appendix 1.

PSD Permit 3449-R6 authorizes NH_3 emissions from each of the two CTG/HRSG units at 32.1 lb/hr. The proposed turbine upgrades will not modify the NH_3 stack exhaust concentrations. The increase in exhaust flow rate will not result in an increase over the currently authorized NH_3 mass emission rates.

Table 1: State Air Toxics Emitted at the Facility (PTE)

Release Point	Pollutant	Requested Allowable Emission Rate (pounds/hour)	Release Height (Meters)	Correction Factor	Allowable Emission Rate Divided by Correction Factor	Emission Rate Screening Level (pounds/hour)
HOBB-1+DB-1	NH_3	32.1	50.29	108	0.3	
HOBB-2+DB-2	NH_3	32.1	50.29	108	0.3	
				Total NH_3	0.6	1.20

As demonstrated in Table 1, the total adjusted emission rate is lower than the emission rate screening level; therefore, modeling is not required. In addition, on September 21, 2011, LPP submitted to the NMED a modeling analysis demonstrating that the NH_3 impact, at currently authorized mass emission rate, was below 1/100th of Occupational Exposure Level (OEL) of NH_3. Since the mass emission rate proposed is at the currently authorized level, Hobbs requests that no further modeling analysis be required.

Section 2: Pollutants with very low emission rates

(If the facility has no pollutants with very low emission rates, note that here and delete the rest of Section 2.)

The Bureau has performed generic modeling to demonstrate that small sources, as listed in Appendix 2, do not need modeling. List in Table 2 the pollutants that do not need to be modeled because of very low emission rates (listed in Appendix 2).

The facility has no pollutants with very low emission rates.

Section 3: Pollutants that have previously been modeled at equal or higher emission rates

(If the facility is not taking credit for previously modeled pollutants, note that here and delete the rest of Section 3.)

Request previous modeling reports from the Bureau if you do not have them and believe they exist before submitting the request. List the pollutants and averaging periods in Table 3 that do not need to be modeled because previous modeling is still valid.

Initial Air Dispersion Modeling (2006)

Initial air dispersion modeling was completed in 2006 as part of the original pre-construction permitting process, using EPA Industrial Source Complex Short-Term (ISCST3) model (Version 02035). The model was used with regulatory default options as recommended in the EPA Guideline on Air Quality Models (EPA, 2003).

The model used the non-default model option for processing missing meteorological data. The land surrounding Hobbs in all directions is open country with no significant development. Therefore, rural dispersion coefficients were utilized within the ISCST3 model. Point sources were modeled with stack heights that did not exceed good engineering practice (GEP) stack height.

Building downwash parameters for the point sources at Hobbs were determined with the latest version of the EPA Building Profile Input Program (BPIP). GEP for all of the point sources, as determined with BPIP, was 83.82 meters (m) (275 feet). The GEP height was driven by the HRSG building and the proximity of all point sources to that structure.

The base receptor grid for ISCST3 consisted of a rectangular, Cartesian array of receptors with spacing that increased with distance from the origin. The base grid originated at the midpoint of the location of the CTG/HRSG stacks. Receptor spacing was defined in accordance with NMED guidance (NMED, 2006) and supplemented with receptors at closer (tighter) receptor spacing, where appropriate, to ensure that the maximum points of impact were identified. Terrain in the vicinity of the project was accounted for by assigning base elevations to each receptor. Digital Elevation Model (DEM) data from the U.S. Geological Survey (USGS) were used to determine receptor elevations.

Meteorological data collected from June 1993 to June 1994 at Empire Abo, New Mexico, was used for modeling of the near field impacts on the basis that it meets all EPA requirements for being representative. The dataset was the NMED recommended meteorological data set for eastern New Mexico.

The proposed emission units for Hobbs were modeled as point sources within ISCST3. There were no sources that were characterized as area or volume sources. The modeling analysis accounted for several modeling scenarios, which included operation at 100 percent load with duct burners, 100 percent load without duct burners, 75 percent load, 50 percent load, and cold start, to yield the highest ground-level concentrations.

The modeling results indicated that the off-property ambient concentrations of all modeled pollutants due to the proposed project did not exceed the Class II area modeling significance levels (SIL) for NOx, CO, SO_2, or PM_{10}. Therefore, in accordance with the procedures outlined in the EPA *Draft New Source Review Workshop Manual*, the proposed facility was assumed to insignificantly consume PSD increment. A full impact analysis was not required, and the Class II ambient impact analysis was complete.

Update Air Dispersion Modeling (2011)

In 2011 air dispersion modeling was accomplished for a PSD-Minor Modification using AERMOD. The modification triggered modeling for toxics due to increased ammonia emissions. In the case of ammonia, the screening level is 1.20 pounds per hour. At 10 ppmvd at 15% O_2 slip, the total hourly emission rate from both turbines operating with duct burners is 64.2 pounds per hour.

The form of the design value for toxics modeling compares the 8-hr average ambient concentration of the toxic to one-one hundredth (0.01) of the Occupation Exposure Limit (OEL). For ammonia the OEL is 18.0 mg/m^3; the 8-hr average is thus compared to 0.18 mg/m^3. If the 8-hr average exceeds the design value, 20.2.72.403.B NMAC lists the requirements for a health assessment. The result of the ammonia modeling study for Hobbs Station demonstrates that the 8-hr average ambient ammonia concentration at the maximum emission rates do not exceed the threshold that triggers a health assessment.

The completed air dispersion modeling analysis shows that the facility will not exceed the 8-hr ambient concentration of one-one hundredth of the OEL for ammonia.

Table 3: List of previously modeled pollutants (facility-wide PTE)

Pollutant	Averaging period	Previously modeled emission rate (pounds/hour)*	Proposed emission rate (pounds/hour)*	Modeled percent of standard or increment
NO_2	24-hr, Annual	36.2	36.2	<53%
CO	1-hr, 8-hr	22.0	22	<16%
SO_2	3-hr, 24-hr	21.4	21.4	<44%
PM_{10}	24-hr	17**	34.2	<39%
NH_3	8-hr	64.2	64.2	<3.0%

*CTG plus duct firing

**Appears prior modeling analysis included filterable PM only

Question			Yes	No
Was modeling performed within the past four years?	Date of modeling report	October 4, 2006 September 21, 2011	**X**	
Was AERMOD used to model the facility? ISCST3 model was used in 2006, AERMOD was used in 2011				
Did previous modeling predict concentrations less than 95% of each air quality standard and PSD increment?			**X**	
Were all averaging periods modeled that apply to the pollutants listed above? All averaging periods applicable at the time modeling was conducted were covered. These include: October 2006 Modeling: • NO_2: annual and 24hr • CO: 1hr, 8-hr • SO_2: 3hr, 24hr and annual • PM_{10}: 24hr and annual • NH_3: 1-hr September 2011 Modeling: • NH_3 : 8-hr				
Were all applicable startup/shutdown/maintenance scenarios modeled? *According to 2007 Modeling Report*			**X**	
Did modeling include all sources within 1000 meters of the facility fence line that now exist?			**X**	
Did modeling include background concentrations at least as high as current background concentrations? *2007 Modeling Report references a 20µg/m^3 background concentration for PM_{10}.* *2011 NMED Guidance lists value of 21.1µg/m^3*				**X**
If a source is changing or being replaced, is the following equation true for all pollutants for which the waiver is requested? This is true for routine emission rates. EXISTING SOURCE REPLACMENT SOURCE $\frac{[(g) \times (h1)] + [(v1)^2/2] + [(c) \times (T1)]}{q1} <= \frac{[(g) \times (h2)] + [(v2)^2/2] + [(c) \times (T2)]}{q2}$ Where g = gravitational constant = 32.2 ft/sec^2 h1 = existing stack height, feet v1 = exhaust velocity, existing source, feet per second c = specific heat of exhaust, 0.28 BTU/lb-degree F T1 = absolute temperature of exhaust, existing source = degree F + 460 q1 = emission rate, existing source, lbs/hour h2 = replacement stack height, feet v2 = exhaust velocity, replacement source, feet per second T2 = absolute temperature of exhaust, replacement source = degree F + 460 q2 = emission rate, replacement source, lbs/hour			**X**	
Are all replacement stacks either the same direction as the replaced stack or vertical? Not applicable				

If you checked "no" for any of the questions, provide an explanation for why you think the previous modeling may still be valid anyway.

Although the proposed project will result in an increase in the actual (past actual vs. future allowable) mass emission rates of NO_X, CO, particulate matter (PM_{10} and $PM_{2.5}$), NH_3, and SO_2, the project does not include an increase in permit allowable emission rates. Since an emission rate increase above the permit allowable limits for the listed pollutants is not being requested with this project, Hobbs is requesting that air dispersion modeling requirements for this project be waived. In addition, the proposed project will note increase NO_X, CO, NH_3, and SO_2 emissions from the previously modeled levels.

Section 4: Discussions of scaled emission rates and scaled concentrations

(If not scaling previous results, note that here and delete the rest of Section 4.)

At times it may be possible to scale the results of modeling one pollutant and apply that to another pollutant. If the analysis for the waiver gets too complicated, then it becomes modeling work rather than a modeling waiver, and applicable modeling fees will be charged for the modeling. Plume depletion, ozone chemical reaction modeling, post-processing, and unequal pollutant ratios from different sources are likely to invalidate scaling.

Describe scenarios below that you wish the modeling section to consider for scaling results to demonstrate compliance.

No scaling is being used.

Appendix 1: Stack Height Release Correction Factor (adapted from 20.2.72.502 NMAC)

Release Height in Meters	Correction Factor
0 to 9.9	1
10 to 19.9	5
20 to 29.9	19
30 to 39.9	41
40 to 49.9	71
50 to 59.9	108
60 to 69.9	152
70 to 79.9	202
80 to 89.9	255
90 to 99.9	317
100 to 109.9	378
110 to 119.9	451
120 to 129.9	533
130 to 139.9	617
140 to 149.9	690
150 to 159.9	781
160 to 169.9	837
170 to 179.9	902
180 to 189.9	1002
190 to 199.9	1066
200 or greater	1161

Appendix 2. Very small emission rate modeling waiver requirements

Type of emissions	Modeling is waived if emissions of a pollutant for the entire facility (including haul roads) are below the amount:
Point source	0.1 lb/hr of H_2S or reduced sulfur, 1.0 lb/hr for other pollutants
Fugitive sources	0.01 lb/hr of H_2S or reduced sulfur, 0.1 lb/hr for other pollutants

Section 17
Compliance Test History

(submitting under 20.2.70, 20.2.72, 20.2.74 NMAC)

To show compliance with existing NSR permits conditions, you must submit a compliance test history. The table below provides an example.

Table 17–1 Compliance Test History Table

Unit No.	Test Description	Test Date
HOBB-1/DB-1	RATA testing in accordance with EPA test methods for NOx and CO, as required by Condition A401C of Permit PSD 3449-M1.	11/13/2013
HOBB-1/DB-1	Annual ammonia compliance testing as required by Condition A401E of Permit PSD 3449-M1.	11/13/2013
HOBB-2/DB-2	RATA testing in accordance with EPA test methods for NOx and CO, as required by Condition A401C of Permit PSD 3449-M1.	11/14/2013
HOBB-2/DB-2	Annual ammonia compliance testing as required by Condition A401E of Permit PSD 3449-M1.	11/13/2013
G-1	Opacity test as required by Condition A111 B of Permit PSD 3449-M1.	11/12-13/2013
FP-1	Opacity test as required by Condition A111 B of Permit PSD 3449-M1.	11/12-13/2013

Section 20
Other Relevant Information

Other relevant information. Use this attachment to clarify any part in the application that you think needs explaining. Reference the section, table, column, and/or field. Include any additional text, tables, calculations or clarifying information.

Additionally, the applicant may propose specific permit language for AQB consideration. In the case of a revision to an existing permit, the applicant should provide the old language and the new language in track changes format to highlight the proposed changes. If proposing language for a new facility or language for a new unit, submit the proposed operating condition(s), along with the associated monitoring, recordkeeping, and reporting conditions. In either case, please limit the proposed language to the affected portion of the permit.

All relevant information has been incorporated in the appropriate application pages.

Section 22
Green House Gas Applicability

(submitting under 20.2.70, 20.2.72, 20.2.73, 20.2.74 NMAC)

Title V (20.2.70 NMAC), NSR (20.2.72 NMAC), NOI (20.2.73 NMAC) and PSD (20.2.74 NMAC) applicants must determine if they are subject to Title V permitting and/or PSD permitting for green house gas (GHG) emissions. GHG emissions are the sum of the aggregate group of six green house gases that include carbon dioxide (CO_2), nitrous oxide (N_2O), methane (CH_4), hydrofluorocarbons (HFCs), perfluorocarbons (PFCs), and sulfur hexafluoride (SF_6). There are two thresholds that must be computed to determine applicability. The first threshold is the sum of GHG mass emissions in TPY. GHG mass emissions are the sum of the total annual tons of green house gases without adjusting with the GWPs. The second threshold is the sum of CO_2 equivalent (CO_2e) emissions in TPY GHG. CO_2e emissions are the sum of the mass emissions of each individual GHG multiplied by its global warming potential (GWP) found in Table A-1 in 40 CFR 98 Mandatory Greenhouse Gas Reporting.

Green House Gas TV and PSD Applicability Determination:

☐ **Notice of Intent Sources** (20.2.73 NMAC): By checking this box and certifying this application the applicant certifies that the facility, based upon the quantity of stack emissions, including start up, shut down, and maintenance emissions, is not subject to 20.2.70 NMAC or 20.2.74 NMAC for Green House Gas (GHG) Emissions. The Department may request the emissions calculations and other documents supporting this determination.

Minor NSR (20.2.72 NMAC), PSD Major (20.2.74 NMAC), and Title V (20.2.70 NMAC) sources must complete the steps outlined below to determine GHG TV and/or PSD applicability.

1. Calculate existing mass GHG and CO_2e emissions from your source. For PSD purposes, if this is a modification to an existing source, you must also calculate the increase in mass GHG and CO_2e emissions due to the modification. Start up, shut down, and maintenance emissions must be included.
2. See Tables 1 and 2 below and compare your mass GHG and CO_2e emissions to the appropriate category for your source.
3. If your source meets all of the criteria within a category, then you must obtain a PSD permit and/or a Title V permit for green house gas emissions.
4. If this is a GHG Major source with an existing BACT or if this is a permit application for a PSD or Title V permit with GHG above the thresholds in Tables 1 or 2, include the emissions calculations and supporting documents in the appropriate sections of this application unless instructed otherwise in Tables 1 or 2. Report GHG mass and CO_2e emissions in Table 2-P of this application unless instructed otherwise in Tables 1 or 2. Emissions are reported in **short** tons per year and represent each emission unit's Potential to Emit (PTE).

NSR (20.2.72 NMAC), PSD Major (20.2.74 NMAC), and Title V (20.2.70 NMAC): Based upon the GHG applicability criteria in this section the applicant certifies that the source is (check all that apply):
☐ Title V Minor and PSD Minor for GHG Emissions [The Department may request the emissions calculations and other documents supporting this determination.]
☐ Title V Major for GHG Emissions
☒ PSD Major for GHG Emissions

Table 1 - Title V Applicability Criteria		
On or after July 1, 2011, newly constructed source, or existing source that does not have a Title V permit	**On or after July 1, 2011, modification or Renewal to Existing Title V Source**	**Requirement**
Source emits or has potential to emit (PTE) ≥ 100,000 TPY CO_2e **and** 100 TPY GHG mass basis	Source emits or has PTE of ≥100,000 TPY CO_2e **and** 100 TPY GHG mass basis	**<u>For new sources:</u>** For a source that meets the criteria on July 1, 2011, submit a Title V permit application no later than June 30, 2012. For a source that meets the criteria after July 1, 2011, submit a Title V application within 12 months of becoming subject to the GHG operating permit program (12 months from commencement of operation of the new unit or modification that caused the source to be subject to Title V). **<u>For existing sources:</u>** Include GHG with the next Title V application for a renewal or modification. **<u>For both new and existing sources</u>:** Include in the TV application, GHG emissions calculations and supporting documents, report CO_2e and GHG emissions in Table 2-P, and address any applicable CAA requirements (e.g. PSD BACT, NSPS). If there are no applicable requirements and if GHG emissions have been reported to the Department under 20.2.73 NMAC, the requirements of the previous sentence do not apply, but changes in GHG emissions resulting in GHG emission limits must be calculated and reported in Table 2-P for Title V permit modifications. Typically GHG emission limits would be established only when there is an applicable requirement, such as a PSD GHG BACT or limits taken to be GHG synthetic minor.

Table 2 - PSD Applicability Criteria			
On or After July 1, 2011, New Source	**On or After July 1, 2011, Major Modification to Existing PSD Major Source**	**On or After July 1, 2011, Modification to Existing PSD Minor Source**	**Requirement**
Source is subject to PSD for another pollutant **and** GHG PTE is ≥ than 75,000 tpy CO_2e **<u>or</u>** GHG PTE is ≥ 100,000 TPY CO_2e **and** ≥ 100/250 TPY mass basis	Source is subject to PSD for another regulated pollutant **and** net GHG emissions increase is ≥ 75,000 tpy CO_2e and greater than zero TPY mass basis **<u>or</u>** existing source has GHG PTE ≥ 100,000 TPY CO_2e **and** ≥ 100/250 TPY mass basis **and** net emissions GHG increase is ≥ 75,000 TPY CO_2e and greater than zero TPY mass basis	Actual or potential emissions of GHGs from the modification is ≥ 100,000 TPY CO_2e **and** ≥ 100/250 TPY mass basis. Minor PSD sources cannot net out of PSD review.	The source is subject to PSD permitting for GHG emissions and other regulated pollutants that are significant. In the application include GHG emissions calculations and supporting documents, report CO_2e and GHG emissions in Table 2-P, complete a GHG BACT determination, and include the TPY CO_2e and GHG mass emissions in the public notice. **Note:** If a minor source permit is issued after January 2, 2011, but before July 1, 2011, and construction has not commenced by July 1, 2011, the permit must be cancelled, reopened, or an additional PSD permitting action taken, if the approved change/construction would trigger GHG PSD after July 1, 2011.

Additional Information:

Sources for Calculating GHG Emissions:

- Manufacturer's Data
- AP-42 Compilation of Air Pollutant Emission Factors at http://www.epa.gov/ttn/chief/ap42/index.html
- EPA's Internet emission factor database WebFIRE at http://cfpub.epa.gov/webfire/
- Subparts C through UU of 40 CFR 98 Mandatory Green House Gas Reporting except that tons should be reported in short tons rather than in metric tons for the purpose of PSD and TV applicability.
- API Compendium of Greenhouse Gas Emissions Methodologies for the Oil and Natural Gas Industry. August 2009 or most recent version.
- Sources listed on EPA's NSR Resources for Estimating GHG Emissions at http://www.epa.gov/nsr/ghgresources.html:
  - ENERGY STAR Industrial Sector Energy Guides and Plant Energy Performance Indicators (benchmarks) http://www.energystar.gov;
  - US EPA National Greenhouse Gas Inventory, http://epa.gov/climatechange/emissions/usinventoryreport.html;
  - EPA's Climate Leaders, http://www.epa.gov/climateleaders/index.html
  - EPA Voluntary Partnerships of GHG Reductions that include the landfill methane outreach program, the CHP partnership program, the Green Power Partnership, the Coalbed Methane Outreach program, the Natural Gas STAR program, and the Voluntary Aluminum Industrial Partnership.
  - SF Emission Reduction Partnership for the Magensium Industry http://www.epa.gov/highgwp/magnesium-sf6/index.html
  - PFC Reduction/Climate Partnership for the Semiconductor Industry http://www.epa.gov/highgwp/semiconductor-pfc/index.html

Global Warming Potentials (GWP):

Applicants must use the Global Warming Potentials codified in Table A-1 of the most recent version of 40 CFR 98 Mandatory Greenhouse Gas Reporting. Please note that sources not subject to 40 CFR 98 and/or 20.2.300 NMAC may still be subject to the GHG PSD and/or TV permitting. The GWP for a particular GHG is the ratio of heat trapped by one unit mass of the GHG to that of one unit mass of CO_2 over a specified time period.

"Greenhouse gas" for the purpose of this part is defined as the aggregate group of the following six gases: carbon dioxide, nitrous oxide, methane, hydrofluorocarbons, perfluorocarbons, and sulfur hexafluoride. **(20.2.70.7.O NMAC, 20.2.74.7.Y NMAC).** You may also find GHGs defined in 40 CFR 86.1818-12(a).

Short Tons:

Short tons for GHGs and other regulated pollutants are the standard unit of measure for PSD and title V permitting programs. 40 CFR 98 Mandatory Greenhouse Reporting requires metric tons.
1 metric ton = 1.10231 short tons (per Table A-2 to Subpart A of Part 98 – Units of Measure Conversions)

EPA's GHG Tailoring Rule:

To review EPA's final GHG Tailoring rule and pre-amble, See "Final GHG Tailoring Rule dated May 13, 2010 located on EPA's NSR Regulations Webpage or Federal Register June 3, 2010 Volume 75, No. 106
http://www.epa.gov/nsr/actions.html

EPA Permitting Guidance:

EPA's Permitting Guidance for GHG and other GHG information can be found on EPA's NSR Clear Air Act Permitting for Greenhouse Gases webpage.
http://www.epa.gov/nsr/ghgpermitting.html

Section 23
Certification

Company Name: Consolidated Asset Management Services (New Mexico), LLC

I, Roger Schnabel, hereby certify that the information and data submitted in this application are true and as accurate as possible, to the best of my knowledge and professional expertise and experience.

Signed this 5 day of March, 2014, upon my oath or affirmation, before a notary of the State of New Mexico.

*Signature

5-Mar-2014
Date

Roger L. Schnabel
Printed Name

Plant Manager
Title

Scribed and sworn before me on this 5th day of March, 2014

My authorization as a notary of the State of New Mexico expires on the 7th day of August, 2016.

Notary's Signature

3/5/14
Date

Daniela Grajiola
Notary's Printed Name

*For Title V applications, the signature must be of the Responsible Official as defined in 20.2.70.7.AE NMAC.