University of Idaho
College of Agricultural and Life Sciences

CIS 1139

Manure and Wastewater Sampling

by Ron E. Sheffield and Richard J. Norell

Nutrient concentrations vary within most types of manure. A review of samples from 42 dairies in Idaho (Table 1) showed that nitrogen (N) and phosphorus (P) in wastewater lagoons vary greatly between farms. For example, on small open lot dairies (< 1,000 head), P can range from 16 to 28 pounds/per acre-inch while on large open lot dairies (> 1,000 head), the range is 12 to 20 pounds per acre-inch.

Phosphorus concentrations on freestall flush dairies ranged from 23 to 31 pounds per acre-inch, while scraped freestall dairies ranged from 17 to 39 pounds per acre-inch. This is a broad range of nutrient levels with the maximum and minimum values differing by more than a factor of two.

These numbers should send a clear message: Average nutrient estimates may be suitable for the purposes of developing a manure utilization plan, but these averages are not adequate for calculating proper application rates.

Do not base your application rates on laboratory test results from previous years because nutrient concentrations can change significantly, particularly when the manure has been exposed to the environment. For example, nutrient levels in a lagoon or storage pond can be greatly diluted by more rainfall than normal or concentrated due to excessive summertime evaporation.

Manure should be tested as close to the date of application as practical. Preferably, the sample should be taken as near the application time as possible prior to the manure application, or within 30 days of application. However, if you urgently need to pump down a full lagoon or storage pond, you should not wait until you can sample and obtain the results. Instead, you should sample the day of irrigation. The results can later be used to determine the nutrients applied to the fields and identify the need for additional nutrients to complete crop production.

Producers who do not test each manure source before or just after land application are faced with a number of questions they simply may not be able to answer:

- Am I supplying plants with adequate nutrients?
- Am I building up excess nutrients that may ultimately move to surface waters or groundwater?
- Am I applying heavy metals at levels that may be toxic to plants and permanently alter soil productivity?

Because environmental damage and losses in plant yield and quality often happen before visible plant symptoms, always have your manure analyzed by a competent lab. Certified labs in Idaho can analyze manure samples and may be able to make agronomic recommendations regarding the use of the manure as a fertilizer.

Manure sampling

Proper sampling is the key to reliable manure analysis. Although lab procedures are accurate, they have little value if the sample fails to represent the manure product.

Manure samples submitted to a lab should represent the average composition of the material that will be applied to the field. Reliable samples typically consist of material collected from a number of locations. Precise sampling methods vary according to the type of manure. The lab, county extension agent, or crop consultant should have specific instructions on sampling, including proper containers to use and maximum holding or shipping times. General sampling recommendations follow.

Preparing liquid manure for lab analysis. Liquid manure samples submitted for analysis should meet the following requirements:

- Place sample in a sealed, clean plastic container with about a 1-pint volume. Glass is not suitable because it is breakable and may contain contaminants.

Table 1. Average lagoon wastewater concentrations from various types of Idaho dairies.

Farm Type[1]	Ammonia (NH_3) lb/ac-in	Total Kjeldahl Nitrogen (TKN) lb/ac-in	Total Phosphorus (TP) lb/ac-in	Total Solids (TS) mg/l	Biochemical Oxygen Demand (BOD) mg/l
OL < 1,000 hd	40 +/- 2	119 +/- 29	22 +/- 6	29,291 +/- 12,098	21,067 +/- 20,240
OL > 1,000 hd	61 +/- 22	92 +/- 36	16 +/- 4	5,087 +/- 1,386	1,068 +/-192
FS Scrape	175 +/- 75	181 +/- 75	28 +/- 11	24,122 +/- 13,826	2,135 +/- 968
FS Flush	149 +/- 23	162 +/- 24	27 +/- 4	10,770 +/- 2,138	1,912 +/- 481

[1] Farm Type: OL = Open Lot Dairy; FS = Freestall Dairy; hd = head.
[2] Average values +/- standard error.

EXHIBIT
tabbies
3225-2

- Leave at least 1 inch of air space in the plastic container to allow for expansion caused by the release of gas from the manure material.
- Refrigerate or freeze samples that cannot be shipped on the day they are collected, minimizing chemical reactions and pressure buildup from gases.

Ideally, liquid manure should be sampled after it is thoroughly mixed. Because this is sometimes impractical, samples can also be taken in accordance with the suggestions that follow.

Lagoon liquid. Premixing the surface liquid in the lagoon is not needed, provided it is the only component that is being pumped. Growers with multistage systems should draw samples from the lagoon they intend to pump for crop irrigation.

Samples should be collected using a clean, plastic container similar to the one shown in **Figure 1.** One pint of material should be taken from at least eight sites around the lagoon and then mixed in the larger clean, plastic container. Effluent should be collected at least 6 feet from the lagoon's edge at a depth of about a foot. Shallower samples from anaerobic lagoons may be less representative than deep samples because oxygen transfer near the surface sometimes alters the chemistry of the solution. Floating debris and scum should be avoided. One pint of mixed material should be sent to the lab. Galvanized containers should never be used for collection, mixing, or storage due to the risk of contamination from metals like zinc in the container.

A University of Idaho study compared nutrient composition from two sampling locations: direct from storage and during land application. Nitrogen concentration averaged 15 pounds per acre-inch higher in storage samples than from land application samples. Conversely, phosphorus and potassium concentrations were similar between storage and land application samples. Nitrogen application rates may be overestimated if based on nutrient analysis from storage samples.

These recommendations are adequate for average irrigation volumes. If an entire storage structure is to be emptied by such means as furrow irrigation, more frequent sampling with many more sampling points is recommended.

Liquid slurry. Manure materials applied as a slurry (approximately 5 to 12 percent solids) from a pit, storage pond, or vacuumed from a feed alley should be mixed prior to sampling. If you agitate your pit or basin prior to sampling, a sampling device pictured in **Figure 1** can be used. If you wish to sample a storage structure without agitation, you must use a composite sampling device as shown in **Figure 2.** Manure should be collected from approximately eight areas around the pit or pond and mixed thoroughly in a clean, plastic container. An 8- to 10-foot section of 0.5- to 0.75-inch plastic pipe can also be used: extend the pipe into the pit with ball plug open, pull up the ball plug (or press your thumb over the end to form an air lock), and remove the pipe from the manure, releasing the air lock to deposit the manure in the plastic container.

Lagoon sludge. The best time to take a sludge sample is while measuring for volume of sludge in a lagoon. This allows samples to be collected from several points around the interior of the lagoon. How the sample is collected depends on how the sludge will be removed. Depending on the density and nutrient concentration of the lagoon effluent, the samples may differ by up to 100 percent from point to point.

To draw a sample, use the same type of sampler as described above for manure slurry (**Figure 2**) and lower the sampler until it almost reaches the bottom. Avoid using a commercial "sludge-judge," because experience has shown that these devices do not work well on thick manure sludge and settled solids.

Wearing plastic or latex gloves, collect a core or profile of lagoon effluent and sludge. Once the pipe is over a clean 5-gallon plastic bucket, slowly break the vacuum by removing your finger from the end of the pipe. If the entire lagoon is going to be agitated during sludge removal, the entire core of collected sludge and effluent should be sent to the laboratory. If the lagoon effluent is going to be drawn down and primarily only sludge pumped out, then just the collected sludge should be sent to the lab. If you are unsure how the sludge will be removed, take samples using both methods, label them separately, and have both analyzed.

Place several samples in the bucket and mix thoroughly before removing a sub-sample for analysis. Consider using a plastic, wide-mouth bottle when shipping samples to the laboratory.

Solid Manure. Solid manure samples should represent the manure's average moisture content. If the material varies

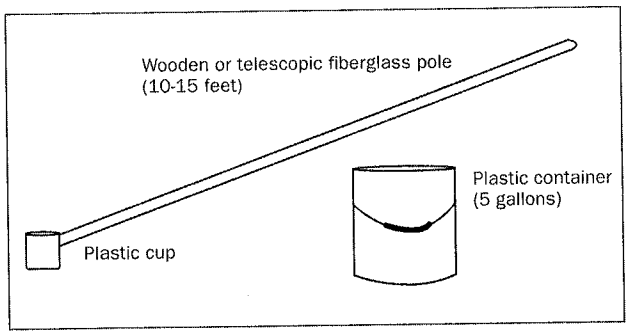

Figure 1. Liquid manure sampling devices like these can be purchased or made.

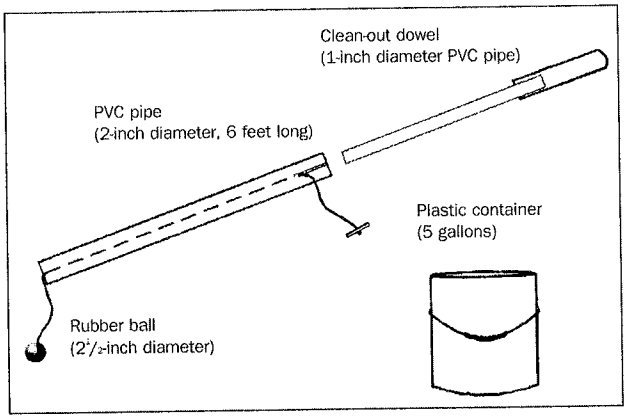

Figure 2. Composite sampler for slurries and lagoon sludge or settled solids includes a collecting PVC pipe and a clean-out dowel (smaller PVC pipe), string, and a rubber ball big enough to cover one end of the collecting pipe.

greatly in its moisture content, you should submit at least 3 samples to a laboratory and take an average of each analysis.

A 1-quart sample is adequate for analysis. Samples should be taken from approximately 8 different areas in the manure pile, placed in a clean plastic container, and thoroughly mixed. Samples should be taken wearing plastic or latex gloves and using a plastic or stainless steel hand shovel or trowel. Do not use galvanized trowels or buckets because they will likely contaminate the sample, rendering falsely high concentrations of metals like zinc in the analysis. Approximately 1 quart of the mixed sample should be placed in a plastic bag, sealed, and shipped directly to the lab. Samples stored for more than 1 day should be refrigerated.

Stockpiled manure or litter. Ideally, stockpiled manure and separated solids should be stored under cover on an impervious surface. The weathered exterior of uncovered waste may not accurately represent the majority of the material. Additionally, rainfall will move water-soluble nutrients down into the pile. If an unprotected stockpile is applied over an extended period, it should be sampled before each application.

Stockpiled manure should be sampled at a depth of at least 18 inches at 6 or more locations around the pile. The collected material should be combined in a plastic container and mixed thoroughly. The 1-quart lab sample should be taken from this mixture, placed in a plastic container or bag, sealed, and shipped to the lab for analysis. If the sample cannot be shipped within one day of sampling, it should be refrigerated.

Surface-scraped manure. Surface-scraped and piled materials should be treated like stockpiled manure. Follow the same procedures for taking samples. Ideally, surface-scraped materials should be protected from the weather unless they are used immediately.

Composted manure. Ideally, composted manure should be stored under cover on an impervious surface. Although nutrients are somewhat stabilized in these materials, some nutrients can leach out during rains. When compost is left unprotected, samples should be submitted to the lab each time the material is applied. Sampling procedures are the same as those described for stockpiled manure.

Who can analyze my manure sample?

Both public and private labs analyze manure samples. Use only labs that are certified or conduct their analysis according to the North American Proficiency Testing – Manure Assessment Program (NAPT-MAP) to test manure and wastewater, or the North American Proficiency Testing – Compost Assessment Program (NAPT-CAP) to test compost. Private labs can be found through local Cooperative Extension Service (CES) agents, state regulators, or on the NAPT-MAP Web site: *http://ghex.colostate.edu/map/*.

Deciding which lab to use depends on several factors:

- Is the lab certified or does it conduct its analysis according to NAPT-MAP or NAPT-CAP guidelines?
- What is the cost to run the sample?
- How long will it take to get your results?
- Does the lab offer all parameters needed for your operation?
- Can you get your sample to the lab in the required time?

When you have selected a lab to analyze the manure, you need to follow its specific sample requirements. Many labs offer sample containers that they ask you to use. Sample collection procedures, including holding times allowed and refrigeration and shipping requirements, must be closely followed to obtain accurate results. One standard that applies to all labs and sampling recommendations is to sample as close to the application time as possible.

Essential analyses include concentrations of essential plant nutrients, including nitrogen as ammonium (NH_4-N), and Total Kjeldahl Nitrogen (TKN), Total phosphorus (TP) and potassium (K). Additionally, you may consider sampling for nitrate (NO_3-N), dissolved phosphorus (PO_4-), calcium (Ca), magnesium (Mg), sulfur (S), iron (Fe), manganese (Mn), zinc (Zn), copper (Cu), boron (B), dry matter content or total solids (TS), pH, and electrical conductivity (for liquid samples). Where applicable, check your NPDES permit (National Pollutant Discharge Elimination System) for specific sampling requirements.

What does my manure analysis report tell me?

Lab results may be presented in a number of ways. The easiest to use is a wet, "as-is" basis in pounds of available nutrient (N, P, or K) (1) per ton; (2) per 1,000 gallons of manure or wastewater; or (3) per acre-inch of manure or wastewater.

If a lab reports results on a dry basis, you must have the moisture content of the manure to convert the results back to a wet basis. A lab may also give results as a concentration (parts per million [ppm] or milligram per liter [mg/l]), which likewise requires conversion factors to get the results into a usable form based on how you apply the manure. Finally, if a lab reports P and K as elemental P and K, you must convert them to the fertilizer basis of P_2O_5 or K_2O. This can be done with the following conversions:

P X 2.29 = P_2O_5
K X 1.20 = K_2O

Select a lab that reports an analysis on an "as-is" basis in the units of measure most useful to your operation.

Most useful information

The most useful information is predicted nutrients available for the first crop. Nutrient availability is predicted based on estimates of manure breakdown and nutrient loss according to application method. If the lab does not report plant-available nutrients, contact your nutrient management planner, a certified crop advisor, or your local extension office for assistance.

Of the total nutrients predicted to be available for the first crop, 50 to 75 percent will likely become available during the first month. It is, therefore, important to apply manure near the time nutrients are required by plants. The remaining nutrients gradually become available over the next three months. Nutrients not available for the first crop are slowly

released to available forms over time. In soils that do not readily leach with heavy rainfall, nutrients may accumulate to significant quantities over time.

You should review the report to see if the analysis is within the expected ranges for your manure. It is common for manure analyses to vary between seasons, due to excess rainfall, drought, or changes in management practices. However, you should compare your results to the results from previous manure reports to ensure that they appear reasonable. If your results are significantly different from what you expected, it is advisable to resample the manure. The original sample may have been mislabeled or improperly collected, and thus not be representative of the manure.

To meet a specific plant nutrient requirement, nutrients listed in the report or calculated as "available for the first crop" should be used in determining the actual application rate. For the availability prediction to be reliable, you must have properly identified the type of manure and the application method on the information sheet submitted to the lab. It is important to understand that nutrient availability cannot be determined with 100 percent accuracy. Many variables, including the type of manure product and environmental factors (i.e., soil type, rainfall, temperature, and general soil conditions), influence the breakdown of the manure and nutrient loss. Remember, the worst sample of your manure is always better than the best book value.

About the authors

Ron E. Sheffield, is a University of Idaho Extension waste managemet engineer at the Twin Falls Research & Extension (R&E) Center and assistant professor in the University of Idaho Department of Biological and Agricultural Engineering, *rons@uidaho.edu.*

Richard J. Norell is a University of Idaho Extension dairy specialist with the Idaho Falls R&E Center, *rnorell@uidaho.edu.*

Issued in furtherance of cooperative extension work in agriculture and home economics, Acts of May 8 and June 30, 1914, in cooperation with the U.S. Department of Agriculture, Charlotte V. Eberlein, Director of University of Idaho Extension, University of Idaho, Moscow, Idaho 83844. The University of Idaho provides equal opportunity in education and employment on the basis of race, color, national origin, religion, sex, sexual orientation, age, disability, or status as a disabled veteran or Vietnam-era veteran, as required by state and federal laws.

University of Idaho Extension

Published March 2007

©2007 by University of Idaho

$1.00