Enterprise Products

ENTERPRISE PRODUCTS PARTNERS L.P.
ENTERPRISE PRODUCTS HOLDINGS LLC
(General Partner)

ENTERPRISE PRODUCTS OPERATING LLC

November 2, 2021

Permit Programs Manager
NMED Air Quality Bureau
525 Camino de los Marquez Suite 1
Santa Fe, NM 87505-1816

RE: Application for Minor Modification and Title V Operating Permit P130-R3M1
Enterprise Product Operating, LLC – South Carlsbad Compressor Station

Permit Programs Manager:

We are submitting an application for a Significant Modification (pursuant to 20.2.70.404.C. NMAC) to the current Air Quality Title V Permit No. P130-R3M1 for South Carlsbad Compressor Station. The format and content of this application are consistent with the Bureau's current policy regarding Title V Significant Modifications; it is a complete application package using the latest Universal Application Form set.

Enclosed are two hard copies of the application (the original and a photocopy) and two disks containing the electronic files. Should you have any questions regarding this application, please contact Jing Li at 713-381-5766.

Sincerely,
Enterprise Products Operating, LLC

Jing Li
Senior Engineer, EHS Air Permitting

P.O. BOX 4324
HOUSTON, TEXAS 77210-4324
713.381.6500

1100 LOUISIANA STREET
HOUSTON, TEXAS 77002-5227
www.enterpriseproducts.com

Mail Application To:		**For Department use only:**
New Mexico Environment Department Air Quality Bureau Permits Section 525 Camino de los Marquez, Suite 1 Santa Fe, New Mexico, 87505 Phone: (505) 476-4300 Fax: (505) 476-4375 www.env.nm.gov/aqb		AIRS No.:

Universal Air Quality Permit Application

Use this application for NOI, NSR, or Title V sources.

Use this application for: the initial application, modifications, technical revisions, and renewals. For technical revisions, complete Sections, 1-A, 1-B, 2-E, 3, 9 and any other sections that are relevant to the requested action; coordination with the Air Quality Bureau permit staff prior to submittal is encouraged to clarify submittal requirements and to determine if more or less than these sections of the application are needed. Use this application for streamline permits as well. See Section 1-I for submittal instructions for other permits.

This application is submitted as (check all that apply): ☐ Request for a No Permit Required Determination (no fee)
☐ **Updating** an application currently under NMED review. Include this page and all pages that are being updated (no fee required).
Construction Status: ☐ Not Constructed ☑ Existing Permitted (or NOI) Facility ☐ Existing Non-permitted (or NOI) Facility
Minor Source: ☐ a NOI 20.2.73 NMAC ☐ 20.2.72 NMAC application or revision ☐ 20.2.72.300 NMAC Streamline application
Title V Source: ☐ Title V (new) ☑ Title V renewal ☐ TV minor mod. ☐ TV significant mod. TV Acid Rain: ☐ New ☐ Renewal
PSD Major Source: ☐ PSD major source (new) ☐ minor modification to a PSD source ☐ a PSD major modification

Acknowledgements:
☑ I acknowledge that a pre-application meeting is available to me upon request. ☑ Title V Operating, Title IV Acid Rain, and NPR applications have no fees.
☐ $500 NSR application Filing Fee enclosed OR ☐ The full permit fee associated with 10 fee points (required w/ streamline applications).
☐ Check No.: in the amount of
☑ I acknowledge the required submittal format for the hard copy application is printed double sided 'head-to-toe', 2-hole punched (except the Sect. 2 landscape tables is printed 'head-to-head'), numbered tab separators. Incl. a copy of the check on a separate page.
☑ I acknowledge there is an annual fee for permits in addition to the permit review fee: www.env.nm.gov/air-quality/permit-fees-2/.
☐ This facility qualifies for the small business fee reduction per 20.2.75.11.C. NMAC. The full $500.00 filing fee is included with this application and I understand the fee reduction will be calculated in the balance due invoice. The Small Business Certification Form has been previously submitted or is included with this application. (Small Business Environmental Assistance Program Information: www.env.nm.gov/air-quality/small-biz-eap-2/.)

Citation: Please provide the **low level citation** under which this application is being submitted: **20.2.70.404.C.1.a NMAC**
(e.g. application for a new minor source would be 20.2.72.200.A NMAC, one example for a Technical Permit Revision is 20.2.72.219.B.1.b NMAC, a Title V acid rain application would be: 20.2.70.200.C NMAC)

Section 1 – Facility Information

Section 1-A: Company Information

		AI # if known (see 1st 3 to 5 #s of permit IDEA ID No.): 218	Updating Permit/NOI #: P130-R3M1
1	Facility Name: South Carlsbad Compressor Station	Plant primary SIC Code (4 digits): 1311	
		Plant NAIC code (6 digits): 211130	
a	Facility Street Address (If no facility street address, provide directions from a prominent landmark): See Section 1-D.		
2	Plant Operator Company Name: Enterprise Products Operating, LLC	Phone/Fax: (713) 381-6595 / (713) 381-6811	
a	Plant Operator Address: PO Box 4324, Houston, TX 77210-4324		

b	Plant Operator's New Mexico Corporate ID or Tax ID: 3289188	
3	Plant Owner(s) name(s): Enterprise Field Services, LLC	Phone/Fax: (713) 381-6500 / (713) 381-6811
a	Plant Owner(s) Mailing Address(s): PO Box 4324, Houston, TX 77210-4324	
4	Bill To (Company): Enterprise Products Operating, LLC	Phone/Fax: (713) 381-6595 / (713) 381-6811
a	Mailing Address: PO Box 4324, Houston, TX 77210-4324	E-mail: environmental@eprod.com
5	☑ Preparer: Jing Li ☐ Consultant:	Phone/Fax: (713) 381-5766 / (713) 759-3931
a	Mailing Address: PO Box 4324, Houston, TX 77210-4324	E-mail: jli@eprod.com
6	Plant Operator Contact: Roland Zamarripa	Phone/Fax: (575) 628-6919
a	Address: PO Box 4324, Houston, TX 77210-4324	E-mail: rzamarripa@eprod.com
7	Air Permit Contact: Jing Li	Title: Senior Environmental Engineer
a	E-mail: jli@eprod.com	Phone/Fax: (713) 381-5766 / (713) 759-3931
b	☑ Preparer: Jing Li ☐ Consultant:	
c	The designated Air permit Contact will receive all official correspondence (i.e. letters, permits) from the Air Quality Bureau.	

Section 1-B: Current Facility Status

1.a	Has this facility already been constructed? ☑ Yes ☐ No	1.b If yes to question 1.a, is it currently operating in New Mexico? ☑ Yes ☐ No
2	If yes to question 1.a, was the existing facility subject to a Notice of Intent (NOI) (20.2.73 NMAC) before submittal of this application? ☐ Yes ☑ No	If yes to question 1.a, was the existing facility subject to a construction permit (20.2.72 NMAC) before submittal of this application? ☑ Yes ☐ No
3	Is the facility currently shut down? ☐ Yes ☑ No	If yes, give month and year of shut down (MM/YY): N/A
4	Was this facility constructed before 8/31/1972 and continuously operated since 1972? ☑ Yes ☐ No	
5	If Yes to question 3, has this facility been modified (see 20.2.72.7.P NMAC) or the capacity increased since 8/31/1972? ☑Yes ☐No ☐N/A	
6	Does this facility have a Title V operating permit (20.2.70 NMAC)? ☑ Yes ☐ No	If yes, the permit No. is: P130-R3M1
7	Has this facility been issued a No Permit Required (NPR)? ☐ Yes ☑ No	If yes, the NPR No. is: N/A
8	Has this facility been issued a Notice of Intent (NOI)? ☐ Yes ☐ No	If yes, the NOI No. is: N/A
9	Does this facility have a construction permit (20.2.72/20.2.74 NMAC)? ☑ Yes ☐ No	If yes, the permit No. is: 0220-M11
10	Is this facility registered under a General permit (GCP-1, GCP-2, etc.)? ☐ Yes ☑ No	If yes, the register No. is: N/A

Section 1-C: Facility Input Capacity & Production Rate

1	What is the facility's maximum input capacity, specify units (reference here and list capacities in Section 20, if more room is required)			
a	Current	Hourly: 8.33 MMscf	Daily: 200 MMscf	Annually: 73 Bscf
b	Proposed	Hourly: 8.33 MMscf	Daily: 200 MMscf	Annually: 73 Bscf
2	What is the facility's maximum production rate, specify units (reference here and list capacities in Section 20, if more room is required)			
a	Current	Hourly: 8.33 MMscf	Daily: 200 MMscf	Annually: 73 Bscf

b	Proposed	Hourly: 8.33 MMscf	Daily: 200 MMscf	Annually: 73 Bscf

Section 1-D: Facility Location Information

1	Section: 12	Range: 27E	Township: 23S	County: Eddy	Elevation (ft): 3,070
2	UTM Zone: ☐ 12 or ☑ 13			Datum: ☐ NAD 27 ☐ NAD 83 ☑ WGS 84	
a	UTM E (in meters, to nearest 10 meters): 581,300 m E			UTM N (in meters, to nearest 10 meters): 3,575,500 m N	
b	**AND** Latitude (deg., min., sec.): 32° 18' 55.54" N			Longitude (deg., min., sec.): 104° 08' 11.55" W	
3	Name and zip code of nearest New Mexico town: Loving, NM 88256				
4	Detailed Driving Instructions from nearest NM town (attach a road map if necessary): From Loving, NM follow US-285 north 2.5 miles to Roberson Road West. Follow Roberson Road West 1.0 mile to the facility.				
5	The facility is 2.8 miles northwest of Loving, NM.				
6	Status of land at facility (check one): ☑ Private ☐ Indian/Pueblo ☐ Federal BLM ☐ Federal Forest Service ☐ Other (specify)				
7	List all municipalities, Indian tribes, and counties within a ten (10) mile radius (20.2.72.203.B.2 NMAC) of the property on which the facility is proposed to be constructed or operated: **Municipalities:** Carlsbad, Loving, Malaga; **Indian Tribes:** None; **Counties:** Eddy				
8	**20.2.72** NMAC applications **only**: Will the property on which the facility is proposed to be constructed or operated be closer than 50 km (31 miles) to other states, Bernalillo County, or a Class I area (see www.env.nm.gov/aqb/modeling/class1areas.html)? ☐Yes ☐ No (20.2.72.206.A.7 NMAC) If yes, list all with corresponding distances in kilometers:				
9	Name nearest Class I area: Carlsbad Caverns National Park				
10	Shortest distance (in km) from facility boundary to the boundary of the nearest Class I area (to the nearest 10 meters): 26.1 km				
11	Distance (meters) from the perimeter of the Area of Operations (AO is defined as the plant site inclusive of all disturbed lands, including mining overburden removal areas) to nearest residence, school or occupied structure: 528.2 m				
12	Method(s) used to delineate the Restricted Area: Fencing, gates, and signage. "**Restricted Area**" is an area to which public entry is effectively precluded. Effective barriers include continuous fencing, continuous walls, or other continuous barriers approved by the Department, such as rugged physical terrain with steep grade that would require special equipment to traverse. If a large property is completely enclosed by fencing, a restricted area within the property may be identified with signage only. Public roads cannot be part of a Restricted Area.				
13	Does the owner/operator intend to operate this source as a portable stationary source as defined in 20.2.72.7.X NMAC? ☐ Yes ☑ No A portable stationary source is not a mobile source, such as an automobile, but a source that can be installed permanently at one location or that can be re-installed at various locations, such as a hot mix asphalt plant that is moved to different job sites.				
14	Will this facility operate in conjunction with other air regulated parties on the same property? ☒ No ☐ Yes If yes, what is the name and permit number (if known) of the other facility?				

Section 1-E: Proposed Operating Schedule (The 1-E.1 & 1-E.2 operating schedules may become conditions in the permit.)

1	Facility **maximum** operating ($\frac{\text{hours}}{\text{day}}$): 24	($\frac{\text{days}}{\text{week}}$): 7	($\frac{\text{weeks}}{\text{year}}$): 52	($\frac{\text{hours}}{\text{year}}$): 8,760		
2	Facility's maximum daily operating schedule (if less than 24 $\frac{\text{hours}}{\text{day}}$)? Start: N/A	☐AM ☐PM	End: N/A	☐AM ☐PM		
3	Month and year of anticipated start of construction: Upon receipt of permit.					
4	Month and year of anticipated construction completion: N/A					
5	Month and year of anticipated startup of new or modified facility: N/A					
6	Will this facility operate at this site for more than one year? ☑ Yes ☐ No					

Section 1-F: Other Facility Information

1	Are there any current Notice of Violations (NOV), compliance orders, or any other compliance or enforcement issues related to this facility? ☐ Yes ☑ No If yes, specify:		
a	If yes, NOV date or description of issue: N/A		NOV Tracking No:
b	Is this application in response to any issue listed in 1-F, 1 or 1a above? ☐ Yes ☑ No If Yes, provide the 1c & 1d info below:		
c	Document Title: N/A	Date:	Requirement # (or page # and paragraph #):
d	Provide the required text to be inserted in this permit: N/A		
2	Is air quality dispersion modeling or modeling waiver being submitted with this application? ☑ Yes ☐ No		
3	Does this facility require an "Air Toxics" permit under 20.2.72.400 NMAC & 20.2.72.502, Tables A and/or B? ☐ Yes ☑ No		
4	Will this facility be a source of federal Hazardous Air Pollutants (HAP)? ☑ Yes ☐ No		
a	If Yes, what type of source? ☐ **Major** (☐ ≥10 tpy of any single HAP **OR** ☐ ≥25 tpy of any combination of HAPS) **OR** ☑ **Minor** (☑ <10 tpy of any single HAP **AND** ☑ <25 tpy of any combination of HAPS)		
5	Is any unit exempt under 20.2.72.202.B.3 NMAC? ☐ Yes ☑ No		
a	If yes, include the name of company providing commercial electric power to the facility: N/A Commercial power is purchased from a commercial utility company, which specifically does not include power generated on site for the sole purpose of the user.		

Section 1-G: Streamline Application

(This section applies to 20.2.72.300 NMAC Streamline applications only)

1	☐ I have filled out Section 18, "Addendum for Streamline Applications." ☑ N/A (This is not a Streamline application.)

Section 1-H: Current Title V Information - Required for all applications from TV Sources

(Title V-source required information for all applications submitted pursuant to 20.2.72 NMAC (Minor Construction Permits), or 20.2.74/20.2.79 NMAC (Major PSD/NNSR applications), and/or 20.2.70 NMAC (Title V))

1	Responsible Official (R.O.) (20.2.70.300.D.2 NMAC): Graham Bacon		Phone: (713) 381-6595
a	R.O. Title: Executive Vice President-EHS&T	R.O. e-mail: environmental@eprod.com	
b	R. O. Address: PO Box 4324, Houston, TX 77210-4324		
2	Alternate Responsible Official (20.2.70.300.D.2 NMAC): Ivan W. Zirbes		Phone: (713) 381-6595
a	A. R.O. Title: Vice President-EHS&T	A. R.O. e-mail: environmental@eprod.com	
b	A. R. O. Address: PO Box 4324, Houston, TX 77210-4324		
3	Company's Corporate or Partnership Relationship to any other Air Quality Permittee (List the names of any companies that have operating (20.2.70 NMAC) permits and with whom the applicant for this permit has a corporate or partnership relationship): Enterprise Field Services, LLC and Enterprise Products Operating, LLC		
4	Name of Parent Company ("Parent Company" means the primary name of the organization that owns the company to be permitted wholly or in part.): Enterprise Product Partners, LP		
a	Address of Parent Company: 1100 Louisiana St., Houston, TX 77002		
5	Names of Subsidiary Companies ("Subsidiary Companies" means organizations, branches, divisions or subsidiaries, which are owned, wholly or in part, by the company to be permitted.): N/A		
6	Telephone numbers & names of the owners' agents and site contacts familiar with plant operations: Daryl Arredondo (575) 628-6819 / Jing Li (713) 381-5766 / (713) 759-3931		

7	Affected Programs to include Other States, local air pollution control programs (i.e. Bernalillo) and Indian tribes: Will the property on which the facility is proposed to be constructed or operated be closer than 80 km (50 miles) from other states, local pollution control programs, and Indian tribes and pueblos (20.2.70.402.A.2 and 20.2.70.7.B)? If yes, state which ones and provide the distances in kilometers: Texas (~34.7 km)

Section 1-I – Submittal Requirements

Each 20.2.73 NMAC (**NOI**), a 20.2.70 NMAC (**Title V**), a 20.2.72 NMAC (**NSR** minor source), or 20.2.74 NMAC (**PSD**) application package shall consist of the following:

Hard Copy Submittal Requirements:

1) One hard copy **original signed and notarized application package** **printed double sided** **'head-to-toe'** **2-hole punched** as we bind the document on top, not on the side; except Section 2 (landscape tables), which should be head-to-head. Please use **numbered tab separators** in the hard copy submittal(s) as this facilitates the review process. For NOI submittals only, hard copies of UA1, Tables 2A, 2D & 2F, Section 3 and the signed Certification Page are required. Please include a copy of the check on a separate page.

2) If the application is for a minor NSR, PSD, NNSR, or Title V application, include one working hard **copy** for Department use. This copy should be printed in book form, 3-hole punched, and **must be double sided**. Note that this is in addition to the head-to-to 2-hole punched copy required in 1) above. Minor NSR Technical Permit revisions (20.2.72.219.B NMAC) only need to fill out Sections 1-A, 1-B, 3, and should fill out those portions of other Section(s) relevant to the technical permit revision. TV Minor Modifications need only fill out Sections 1-A, 1-B, 1-H, 3, and those portions of other Section(s) relevant to the minor modification. NMED may require additional portions of the application to be submitted, as needed.

3) The entire NOI or Permit application package, including the full modeling study, should be submitted electronically. Electronic files for applications for NOIs, any type of General Construction Permit (GCP), or technical revisions to NSRs must be submitted with compact disk (CD) or digital versatile disc (DVD). For these permit application submittals, **two** CD copies are required (in sleeves, not crystal cases, please), with additional CD copies as specified below. NOI applications require only a single CD submittal. Electronic files for other New Source Review (construction) permits/permit modifications or Title V permits/permit modifications can be submitted on CD/DVD or sent through AQB's secure file transfer service.

Electronic files sent by (check one):

☑ CD/DVD attached to paper application

☐ secure electronic transfer. Air Permit Contact Name_____

Email_____

Phone number _____

a. If the file transfer service is chosen by the applicant, after receipt of the application, the Bureau will email the applicant with instructions for submitting the electronic files through a secure file transfer service. Submission of the electronic files through the file transfer service needs to be completed within 3 business days after the invitation is received, so the applicant should ensure that the files are ready when sending the hard copy of the application. The applicant will not need a password to complete the transfer. **Do not use the file transfer service for NOIs, any type of GCP, or technical revisions to NSR permits.**

4) Optionally, the applicant may submit the files with the application on compact disk (CD) or digital versatile disc (DVD) following the instructions above and the instructions in 5 for applications subject to PSD review.

5) If **air dispersion modeling** is required by the application type, include the **NMED Modeling Waiver** and/or electronic air dispersion modeling report, input, and output files. The dispersion modeling ***summary report only*** should be submitted as hard copy(ies) unless otherwise indicated by the Bureau.

6) If the applicant submits the electronic files on CD and the application is subject to PSD review under 20.2.74 NMAC (PSD) or NNSR under 20.2.79 NMC include,
   a. one additional CD copy for US EPA,
   b. one additional CD copy for each federal land manager affected (NPS, USFS, FWS, USDI) and,
   c. one additional CD copy for each affected regulatory agency other than the Air Quality Bureau.

   If the application is submitted electronically through the secure file transfer service, these extra CDs do not need to be submitted.

Electronic Submittal Requirements [in addition to the required hard copy(ies)]:

1) All required electronic documents shall be submitted as 2 separate CDs or submitted through the AQB secure file transfer service. Submit a single PDF document of the entire application as submitted and the individual documents comprising the application.

2) The documents should also be submitted in Microsoft Office compatible file format (Word, Excel, etc.) allowing us to access the text and formulas in the documents (copy & paste). Any documents that cannot be submitted in a Microsoft Office compatible

format shall be saved as a PDF file from within the electronic document that created the file. If you are unable to provide Microsoft office compatible electronic files or internally generated PDF files of files (items that were not created electronically: i.e. brochures, maps, graphics, etc,), submit these items in hard copy format. We must be able to review the formulas and inputs that calculated the emissions.

3) It is preferred that this application form be submitted as 4 electronic files (3 MSWord docs: Universal Application section 1 [UA1], Universal Application section 3-19 [UA3], and Universal Application 4, the modeling report [UA4]) and 1 Excel file of the tables (Universal Application section 2 [UA2]). Please include as many of the 3-19 Sections as practical in a single MS Word electronic document. Create separate electronic file(s) if a single file becomes too large or if portions must be saved in a file format other than MS Word.

4) The electronic file names shall be a maximum of 25 characters long (including spaces, if any). The format of the electronic Universal Application shall be in the format: "A-3423-FacilityName". The "A" distinguishes the file as an application submittal, as opposed to other documents the Department itself puts into the database. Thus, all electronic application submittals should begin with "A-". Modifications to existing facilities should use the core permit number (i.e. '3423') the Department assigned to the facility as the next 4 digits. Use 'XXXX' for new facility applications. The format of any separate electronic submittals (additional submittals such as non-Word attachments, re-submittals, application updates) and Section document shall be in the format: "A-3423-9-description", where "9" stands for the section # (in this case Section 9-Public Notice). Please refrain, as much as possible, from submitting any scanned documents as this file format is extremely large, which uses up too much storage capacity in our database. Please take the time to fill out the header information throughout all submittals as this will identify any loose pages, including the Application Date (date submitted) & Revision number (0 for original, 1, 2, etc.; which will help keep track of subsequent partial update(s) to the original submittal. Do not use special symbols (#, @, etc.) in file names. The footer information should not be modified by the applicant.

Table of Contents

Section 1: General Facility Information
Section 2: Tables
Section 3: Application Summary
Section 4: Process Flow Sheet
Section 5: Plot Plan Drawn to Scale
Section 6: All Calculations
Section 7: Information Used to Determine Emissions
Section 8: Map(s)
Section 9: Proof of Public Notice
Section 10: Written Description of the Routine Operations of the Facility
Section 11: Source Determination
Section 12: PSD Applicability Determination for All Sources & Special Requirements for a PSD Application
Section 13: Discussion Demonstrating Compliance with Each Applicable State & Federal Regulation
Section 14: Operational Plan to Mitigate Emissions
Section 15: Alternative Operating Scenarios
Section 16: Air Dispersion Modeling
Section 17: Compliance Test History
Section 18: Addendum for Streamline Applications (streamline applications only)
Section 19: Requirements for the Title V (20.2.70 NMAC) Program (Title V applications only)
Section 20: Other Relevant Information
Section 21: Addendum for Landfill Applications
Section 22: Certification Page

Table 2-A: Regulated Emission Sources

Unit and stack numbering must correspond throughout the application package. If applying for a NOI under 20.2.73 NMAC, equipment exemptions under 2.72.202 NMAC do not apply.

Unit Number[1]	Source Description	Make	Model #	Serial #	Manufacturer's Rated Capacity[3] (Specify Units)	Requested Permitted Capacity[3] (Specify Units)	Date of Manufacture[2] / Date of Construction/ Reconstruction[2]	Controlled by Unit # / Emissions vented to Stack #	Source Classification Code (SCC)	For Each Piece of Equipment, Check One	RICE Ignition Type (CI, SI, 4SLB, 4SRB, 2SLB)[4]	Replacing Unit No.
1	Natural Gas Turbine	Solar Centaur	T-4702	OHH19-C-7696	4700 hp	4328 hp	1973 / 2019	N/A / 1	20200201	☑ Existing (unchanged) ☐ To be Removed ☐ New/Additional ☐ Replacement Unit ☐ To Be Modified ☐ To be Replaced	N/A	N/A
C9101	Compressor						Unknown / < 8/23/2011	N/A / N/A		☑ Existing (unchanged) ☐ To be Removed ☐ New/Additional ☐ Replacement Unit ☐ To Be Modified ☐ To be Replaced	N/A	N/A
2	Natural Gas Turbine	Solar Centaur	T-4702	OHG18-C-8738	4700 hp	4328 hp	1979 / 2018	N/A / 2	20200201	☑ Existing (unchanged) ☐ To be Removed ☐ New/Additional ☐ Replacement Unit ☐ To Be Modified ☐ To be Replaced	N/A	N/A
C9102	Compressor						Unknown / < 8/23/2011	N/A / N/A		☑ Existing (unchanged) ☐ To be Removed ☐ New/Additional ☐ Replacement Unit ☐ To Be Modified ☐ To be Replaced	N/A	N/A
5	Natural Gas Turbine	Solar Centaur	T40-4700S	OHL20-C1803	4700 hp	4329 hp	12/18/2000 / 4/1/2021	N/A / N/A	20200201	☐ Existing (unchanged) ☐ To be Removed ☑ New/Additional ☐ Replacement Unit ☐ To Be Modified ☐ To be Replaced	N/A	N/A
C9103	Compressor						Unknown / < 8/23/2011	N/A / N/A		☐ Existing (unchanged) ☐ To be Removed ☑ New/Additional ☐ Replacement Unit ☐ To Be Modified ☐ To be Replaced	N/A	N/A
3a	Gylcol Dehydrator Still Vent	Gas Tech	Unknown	Unknown	200 MMscf/day	200 MMscf/day	1/1/1999 / Unknown	3a / 3b	31000302	☐ Existing (unchanged) ☐ To be Removed ☐ New/Additional ☐ Replacement Unit ☑ To Be Modified ☐ To be Replaced	N/A	N/A
3b	Glycol Dehydrator Reboiler	Gas Tech	Unknown	Unknown	3.0 MMBtu/hr	3.0 MMBtu/hr	1/1/1999 / Unknown	3b / 3b	31000302	☐ Existing (unchanged) ☐ To be Removed ☐ New/Additional ☐ Replacement Unit ☑ To Be Modified ☐ To be Replaced	N/A	N/A
4a	Amine Unit	Exterran	Unknown	Unknown	125 MMscf/day	125 MMscf/day	9/1/2010 / Unknown	N/A / 4a	40400311	☐ Existing (unchanged) ☑ To be Removed ☐ New/Additional ☐ Replacement Unit ☐ To Be Modified ☐ To be Replaced	N/A	N/A
4b	Amine Uniit Reboiler	Unknown	Unknown	Unknown	55 MMBtu/hr	44 MMBtu/hr	9/1/2010 / Unknown	N/A / 4b	10100602	☐ Existing (unchanged) ☑ To be Removed ☐ New/Additional ☐ Replacement Unit ☐ To Be Modified ☐ To be Replaced	N/A	N/A
T-008	Stabilized Condensate Tank	Unknown	Unknown	N/A	300 bbl	300 bbl	2013 / Unknown	N/A / N/A	40400311	☐ Existing (unchanged) ☐ To be Removed ☐ New/Additional ☐ Replacement Unit ☑ To Be Modified ☐ To be Replaced	N/A	N/A
T-009	Stabilized Condensate Tank	Unknown	Unknown	N/A	300 bbl	300 bbl	< 8/23/2011 / < 8/23/2011	N/A / N/A	40400311	☐ Existing (unchanged) ☐ To be Removed ☐ New/Additional ☐ Replacement Unit ☑ To Be Modified ☐ To be Replaced	N/A	N/A
T-011	Stabilized Condensate Tank	Unknown	Unknown	N/A	300 bbl	300 bbl	Dec-06 / Unknown	N/A / N/A	40400311	☐ Existing (unchanged) ☐ To be Removed ☐ New/Additional ☐ Replacement Unit ☑ To Be Modified ☐ To be Replaced	N/A	N/A

Unit Number[1]	Source Description	Make	Model #	Serial #	Manufacturer's Rated Capacity[3] (Specify Units)	Requested Permitted Capacity[3] (Specify Units)	Date of Manufacture[2] / Date of Construction/ Reconstruction[2]	Controlled by Unit # / Emissions vented to Stack #	Source Classification Code (SCC)	For Each Piece of Equipment, Check One	RICE Ignition Type (CI, SI, 4SLB, 4SRB, 2SLB)[4]	Replacing Unit No.
T-012	Stabilized Condensate Tank	Unknown	Unknown	N/A	300 bbl	300 bbl	Dec-06 Unknown	N/A N/A	40400311	☐ Existing (unchanged) ☐ To be Removed ☐ New/Additional ☐ Replacement Unit ☑ To Be Modified ☐ To be Replaced	N/A	N/A
Flare	Process Flare	Unknown	Unknown	N/A	72 Mscf/hr	62.5 Mscf/hr	Unknown 12/1/2006	N/A Flare	31000215	☑ Existing (unchanged) ☐ To be Removed ☐ New/Additional ☐ Replacement Unit ☐ To Be Modified ☐ To be Replaced	N/A	N/A
VENT (SSM)	Vent for Startup, Shutdown and Blowdown Emissions	N/A	N/A	N/A	N/A	N/A	Unknown Unknown	N/A N/A	31000299	☑ Existing (unchanged) ☐ To be Removed ☐ New/Additional ☐ Replacement Unit ☐ To Be Modified ☐ To be Replaced	N/A	N/A
F-001	Fugitives	N/A	N/A	N/A	N/A	N/A	N/A N/A	N/A N/A	31088811	☐ Existing (unchanged) ☐ To be Removed ☐ New/Additional ☐ Replacement Unit ☑ To Be Modified ☐ To be Replaced	N/A	N/A
Flare (SSM)	SSM Flare	N/A	N/A	N/A	N/A	N/A	N/A N/A	N/A N/A	31000215	☐ Existing (unchanged) ☐ To be Removed ☐ New/Additional ☐ Replacement Unit ☑ To Be Modified ☐ To be Replaced	N/A	N/A
Load	Truck Loading Emission	N/A	N/A	N/A	69,350 bbl/yr	69,350 bbl/yr	N/A N/A	N/A N/A	31000199	☑ Existing (unchanged) ☐ To be Removed ☐ New/Additional ☐ Replacement Unit ☐ To Be Modified ☐ To be Replaced	N/A	N/A
Haul	Haul Road Emission	N/A	N/A	N/A	N/A	N/A	N/A N/A	N/A N/A	31088811	☑ Existing (unchanged) ☐ To be Removed ☐ New/Additional ☐ Replacement Unit ☐ To Be Modified ☐ To be Replaced	N/A	N/A
MALF	Malfunction Emissions	N/A	N/A	N/A	N/A	N/A	N/A N/A	N/A N/A	31088811	☑ Existing (unchanged) ☐ To be Removed ☐ New/Additional ☐ Replacement Unit ☐ To Be Modified ☐ To be Replaced	N/A	N/A

[1] Unit numbers must correspond to unit numbers in the previous permit unless a complete cross reference table of all units in both permits is provided.

[2] Specify dates required to determine regulatory applicability.

[3] To properly account for power conversion efficiencies, generator set rated capacity shall be reported as the rated capacity of the engine in horsepower, not the kilowatt capacity of the generator set.

[4] "4SLB" means four stroke lean burn engine, "4SRB" means four stroke rich burn engine, "2SLB" means two stroke lean burn engine, "CI" means compression ignition, and "SI" means spark ignition

Table 2-B: Insignificant Activities[1] (20.2.70 NMAC) OR Exempted Equipment (20.2.72 NMAC)

All 20.2.70 NMAC (Title V) applications must list all Insignificant Activities in this table. All 20.2.72 NMAC applications must list Exempted Equipment in this table. If equipment listed on this table is exempt under 20.2.72.202.B.5, include emissions calculations and emissions totals for 202.B.5 "similar functions" units, operations, and activities in Section 6, Calculations. Equipment and activities exempted under 20.2.72.202 NMAC may not necessarily be Insignificant under 20.2.70 NMAC (and vice versa). Unit & stack numbering must be consistent throughout the application package. Per Exemptions Policy 02-012.00 (see http://www.env.nm.gov/aqb/permit/aqb_pol.html), 20.2.72.202.B NMAC Exemptions do not apply, but 20.2.72.202.A NMAC exemptions do apply to NOI facilities under 20.2.73 NMAC. List 20.2.72.301.D.4 NMAC Auxiliary Equipment for Streamline applications in Table 2-A. The List of Insignificant Activities (for TV) can be found online at https://www.env.nm.gov/air-quality/air-quality-title-v-operating-permits-guidance-page/. TV sources may elect to enter both TV Insignificant Activities and Part 72 Exemptions on this form.

Unit Number	Source Description	Manufacturer	Model No. / Serial No.	Max Capacity / Capacity Units	List Specific 20.2.72.202 NMAC Exemption (e.g. 20.2.72.202.B.5) / Insignificant Activity citation (e.g. IA List Item #1.a)	Date of Manufacture /Reconstruction[2] / Date of Installation /Construction[2]	For Each Piece of Equipment, Check One
T-001	Lube Oil Tank	N/A	N/A N/A	24 bbl	20.2.72.202.B(2)(a) NMAC IA List Item #5	Unknown Unknown	☑ Existing (unchanged) ☐ To be Removed ☐ New/Additional ☐ Replacement Unit ☐ To Be Modified ☐ To be Replaced
T-002	Methanol Tank	N/A	N/A N/A	210 bbl	20.2.72.202.B(2)(a) NMAC IA List Item #5	Unknown Unknown	☑ Existing (unchanged) ☐ To be Removed ☐ New/Additional ☐ Replacement Unit ☐ To Be Modified ☐ To be Replaced
T-003	Triethylene Glycol Tank	N/A	N/A N/A	210 bbl	20.2.72.202.B(2)(a) NMAC IA List Item #5	Unknown Unknown	☑ Existing (unchanged) ☐ To be Removed ☐ New/Additional ☐ Replacement Unit ☐ To Be Modified ☐ To be Replaced
T-004	Used Oil Tank	N/A	N/A N/A	210 bbl	20.2.72.202.B(2)(a) NMAC IA List Item #5	Unknown Unknown	☑ Existing (unchanged) ☐ To be Removed ☐ New/Additional ☐ Replacement Unit ☐ To Be Modified ☐ To be Replaced
T-005	Used Oil Tank	N/A	N/A N/A	210 bbl	20.2.72.202.B(2)(a) NMAC IA List Item #5	Unknown Unknown	☑ Existing (unchanged) ☐ To be Removed ☐ New/Additional ☐ Replacement Unit ☐ To Be Modified ☐ To be Replaced
T-006	Slop Tank	N/A	N/A N/A	TBD TBD	20.2.72.202.B(5) NMAC IA List Item #1.a.	N/A N/A	☐ Existing (unchanged) ☐ To be Removed ☐ New/Additional ☐ Replacement Unit ☑ To Be Modified ☐ To be Replaced
Unload	Chemical Unloading	N/A	N/A N/A	TBD TBD	20.2.72.202.B(5) NMAC IA List Item #1.a.	N/A N/A	☑ Existing (unchanged) ☐ To be Removed ☐ New/Additional ☐ Replacement Unit ☐ To Be Modified ☐ To be Replaced
GC-1	Gas Chromatograph	Daniel	700 Unknown	350 cc/min	20.2.72.202.B(5) NMAC IA List Item #1.a.	Unknown Unknown	☑ Existing (unchanged) ☐ To be Removed ☐ New/Additional ☐ Replacement Unit ☐ To Be Modified ☐ To be Replaced
GC-2	Gas Chromatograph	ABB	NGC 8206 Unknown	820 cc/min	20.2.72.202.B(5) NMAC IA List Item #1.a.	Unknown Unknown	☑ Existing (unchanged) ☐ To be Removed ☐ New/Additional ☐ Replacement Unit ☐ To Be Modified ☐ To be Replaced
Pigging	Pig Receiver and Launcher Emissions	N/A	N/A N/A	280 scf/event	20.2.72.202.B(5) NMAC Insignificant Activity #1a	TBD TBD	☐ Existing (unchanged) ☐ To be Removed ☑ New/Additional ☐ Replacement Unit ☐ To Be Modified ☐ To be Replaced
							☐ Existing (unchanged) ☐ To be Removed ☐ New/Additional ☐ Replacement Unit ☐ To Be Modified ☐ To be Replaced

[1] Insignificant activities exempted due to size or production rate are defined in 20.2.70.300.D.6, 20.2.70.7.Q NMAC, and the NMED/AQB List of Insignificant Activities, dated September 15, 2008. Emissions from these insignificant activities do not need to be reported, unless specifically requested.

[2] Specify date(s) required to determine regulatory applicability.

Table 2-C: Emissions Control Equipment

Unit and stack numbering must correspond throughout the application package. Only list control equipment for TAPs if the TAP's maximum uncontrolled emissions rate is over its respective threshold as listed in 20.2.72 NMAC, Subpart V, Tables A and B. In accordance with 20.2.72.203.A(3) and (8) NMAC, 20.2.70.300.D(5)(b) and (e) NMAC, and 20.2.73.200.B(7) NMAC, the permittee shall report all control devices and list each pollutant controlled by the control device regardless if the applicant takes credit for the reduction in emissions.

Control Equipment Unit No.	Control Equipment Description	Date Installed	Controlled Pollutant(s)	Controlling Emissions for Unit Number(s)[1]	Efficiency (% Control by Weight)	Method used to Estimate Efficiency
Flare	Condensate Stabilizer Flare - AOS	Unknown	VOCs & HAPs	Condensate Stabilizer	98%	Engineering Estimate
3b	Glycol Dehydrator Reboiler	Unknown	VOCs & HAPs	3a	95%	Engineering Estimate
5	SoloNOx	TBD	NO_X	5	25 ppm	Manufacturers Spec.
EC-1[2]	Electric Vapor Compressor	<8/23/2011	VOCs	T-008, T-009, T-011, and T-012	95%	Engineering Estimate

[1] List each control device on a separate line. For each control device, list all emission units controlled by the control device.

[2]The electric compressor VRU (EC-1) reroutes vapors from the condensate tanks to the inlet. The tanks are also hardpiped to the flare as control during downtime.

Table 2-D: Maximum Emissions (under normal operating conditions)

☐ **This Table was intentionally left blank because it would be identical to Table 2-E.**

Maximum Emissions are the emissions at maximum capacity and prior to (in the absence of) pollution control, emission-reducing process equipment, or any other emission reduction. Calculate the hourly emissions using the worst case hourly emissions for each pollutant. For each pollutant, calculate the annual emissions as if the facility were operating at maximum plant capacity without pollution controls for 8760 hours per year, unless otherwise approved by the Department. List Hazardous Air Pollutants (HAP) & Toxic Air Pollutants (TAPs) in Table 2-I. Unit & stack numbering must be consistent throughout the application package. Fill all cells in this table with the emission numbers or a "-" symbol. A "-" symbol indicates that emissions of this pollutant are not expected. Numbers shall be expressed to at least 2 decimal points (e.g. 0.41, 1.41, or 1.41E-4).

Unit No.	NOx		CO		VOC		SOx		PM[1]		PM10[1]		PM2.5[1]		H_2S		Lead	
	lb/hr	ton/yr	lb/hr	ton/yr	lb/hr	ton/yr	lb/hr	ton/yr	lb/hr	ton/yr	lb/hr	ton/yr	lb/hr	ton/yr	lb/hr	ton/yr	lb/hr	ton/yr
1	27.00	90.82	7.40	11.25	0.77	3.37	0.50	2.21	0.63	2.78	0.63	2.78	0.63	2.78	2.52E-04	0.0011	-	-
2	27.00	90.82	7.40	11.25	0.77	3.37	0.50	2.21	0.63	2.78	0.63	2.78	0.63	2.78	2.52E-04	0.0011	-	-
5	4.43	19.40	5.89	25.78	1.40	6.15	0.48	2.10	0.27	1.16	0.27	1.16	0.27	1.16	2.39E-04	0.0010	-	-
3a	-	-	-	-	73.65	322.57	-	-	-	-	-	-	-	-	-	-	-	-
3b	0.29	1.29	0.25	1.08	0.016	0.071	0.036	0.16	0.022	0.098	0.022	0.098	0.022	0.098	8.93E-04	0.0039	-	-
T-008 T-009 T-011 T-012	-	-	-	-	*	18.85	-	-	-	-	-	-	-	-	-	-	-	-
F-001	-	-	-	-	*	35.85	-	-	-	-	-	-	-	-	-	-	-	-
LOAD	-	-	-	-	*	9.82	-	-	-	-	-	-	-	-	-	-	-	-
Flare (process)	7.79	2.82	62.84	22.65	61.88	22.28	0.11	0.46	-	-	-	-	-	-	0.056	0.020	-	-
Totals	66.51	205.15	83.77	72.01	138.48	422.33	1.63	7.12	1.56	6.82	1.56	6.82	1.56	6.82	0.06	0.03	0.00	0.00

[1]**Condensable Particulate Matter:** Include condensable particulate matter emissions for PM10 and PM2.5 if the source is a combustion source. Do not include condensable particulate matter for PM unless PM is set equal to PM10 and PM2.5. Particulate matter (PM) is not subject to an ambient air quality standard, but PM is a regulated air pollutant under PSD (20.2.74 NMAC) and Title V (20.2.70 NMAC).

"*" Denotes an hourly emission rate is not appropriate

Table 2-E: Requested Allowable Emissions

Unit & stack numbering must be consistent throughout the application package. Fill all cells in this table with the emission numbers or a "-" symbol. A "-" symbol indicates that emissions of this pollutant are not expected. Numbers shall be expressed to at least 2 decimal points (e.g. 0.41, 1.41, or $1.41E^{-4}$).

Unit No.	NOx		CO		VOC		SOx		PM[1]		PM10[1]		PM2.5[1]		H_2S		Lead	
	lb/hr	ton/yr	lb/hr	ton/yr	lb/hr	ton/yr	lb/hr	ton/yr	lb/hr	ton/yr	lb/hr	ton/yr	lb/hr	ton/yr	lb/hr	ton/yr	lb/hr	ton/yr
1	27.00	90.82	7.40	11.25	0.77	3.37	0.50	2.21	0.63	2.78	0.63	2.78	0.63	2.78	2.52E-04	0.0011	-	-
2	27.00	90.82	7.40	11.25	0.77	3.37	0.50	2.21	0.63	2.78	0.63	2.78	0.63	2.78	2.52E-04	0.0011	-	-
5	4.43	19.40	5.89	25.78	1.40	6.15	0.48	2.10	0.27	1.16	0.27	1.16	0.27	1.16	2.39E-04	0.0010	-	-
3a	-	-	-	-	-	-	-	-	-	-	-	-	-	-	-	-	-	-
3b	0.045	0.20	0.038	0.17	0.87	3.80	0.0065	0.028	0.0034	0.015	0.0034	0.015	0.0034	0.015	1.62E-04	7.08E-04	-	-
T-008	-	-	-	-	*	18.85	-	-	-	-	-	-	-	-	-	-	-	-
T-009																		
T-011																		
T-012																		
F-001	-	-	-	-	*	35.85	-	-	-	-	-	-	-	-	-	-	-	-
LOAD	-	-	-	-	*	9.82	-	-	-	-	-	-	-	-	-	-	-	-
Flare (Process)	7.79	2.82	62.84	22.65	61.88	22.28	0.11	0.46	-	-	-	-	-	-	0.056	0.020	-	-
-	-	-	-	-	-	-	-	-	-	-	-	-	-	-	-	-	-	-
-	-	-	-	-	-	-	-	-	-	-	-	-	-	-	-	-	-	-
-	-	-	-	-	-	-	-	-	-	-	-	-	-	-	-	-	-	-
-	-	-	-	-	-	-	-	-	-	-	-	-	-	-	-	-	-	-
-	-	-	-	-	-	-	-	-	-	-	-	-	-	-	-	-	-	-
-	-	-	-	-	-	-	-	-	-	-	-	-	-	-	-	-	-	-
							-	-		-			-	-	-	-	-	-
-	-	-	-	-	-	-	-	-	-	-	-	-	-	-	-	-	-	-
-	-	-	-	-	-	-	-	-	-	-	-	-	-	-	-	-	-	-
-	-	-	-	-	-	-	-	-	-	-	-	-	-	-	-	-	-	-
-	-	-	-	-	-	-	-	-	-	-	-	-	-	-	-	-	-	-
-	-	-	-	-	-	-	-	-	-	-	-	-	-	-	-	-	-	-
-	-	-	-	-	-	-	-	-	-	-	-	-	-	-	-	-	-	-
Totals	66.26	204.06	83.56	71.09	65.69	103.49	1.60	6.99	1.54	6.74	1.54	6.74	1.54	6.74	0.057	0.024	-	-

[1] **Condensable Particulate Matter:** Include condensable particulate matter emissions for PM10 and PM2.5 if the source is a combustion source. Do not include condensable particulate matter for PM unless PM is set equal to PM10 and PM2.5. Particulate matter (PM) is not subject to an ambient air quality standard, but it is a regulated air pollutant under PSD (20.2.74 NMAC) and Title V (20.2.70 NMAC).

"*" Denotes an hourly emission rate is not appropriate

Table 2-F: Additional Emissions during Startup, Shutdown, and Routine Maintenance (SSM)

☐ This table is intentionally left blank since all emissions at this facility due to routine or predictable startup, shutdown, or scehduled maintenance are no higher than those listed in Table 2-E and a malfunction emission limit is not already permitted or requested. If you are required to report GHG emissions as described in Section 6a, include any GHG emissions during Startup, Shutdown, and/or Scheduled Maintenance (SSM) in Table 2-P. Provide an explanations of SSM emissions in Section 6 and 6a.

All applications for facilities that have emissions during routine our predictable startup, shutdown or scheduled maintenance (SSM)[1], including NOI applications, must include in this table the Maximum Emissions during routine or predictable startup, shutdown and scheduled maintenance (20.2.7 NMAC, 20.2.72.203.A.3 NMAC, 20.2.73.200.D.2 NMAC). In Section 6 and 6a, provide emissions calculations for all SSM emissions reported in this table. Refer to "Guidance for Submittal of Startup, Shutdown, Maintenance Emissions in Permit Applications (https://www.env.nm.gov/aqb/permit/aqb_pol.html) for more detailed instructions. Numbers shall be expressed to at least 2 decimal points (e.g. 0.41, 1.41, or 1.41E-4).

Unit No.	NOx		CO		VOC		SOx		PM[2]		PM10[2]		PM2.5[2]		H_2S		Lead	
	lb/hr	ton/yr	lb/hr	ton/yr	lb/hr	ton/yr	lb/hr	ton/yr	lb/hr	ton/yr	lb/hr	ton/yr	lb/hr	ton/yr	lb/hr	ton/yr	lb/hr	ton/yr
Flare (SSM)	7.73	0.20	62.48	1.62	76.13	1.98	-	-	-	-	-	-	-	-	-	-	-	-
Vent (SSM)	-	-	-	-	*	26.81	-	-	-	-	-	-	-	-	*	0.10	-	-
MALF	15.52	7.00	125.32	10.00	138.01	10.00	0.11	10.00	-	-	-	-	-	-	0.056	2.00	-	-
Totals	23.25	7.20	187.79	11.62	214.14	38.79	0.11	10.00	-	-	-	-	-	-	0.06	2.10	-	-

[1] **For instance**, if the short term steady-state Table 2-E emissions are 5 lb/hr and the SSM rate is 12 lb/hr, enter 7 lb/hr in this table. If the annual steady-state Table 2-E emissions are 21.9 TPY, and the number of scheduled SSM events result in annual emissions of 31.9 TPY, enter 10.0 TPY in the table below.

[2] **Condensable Particulate Matter:** Include condensable particulate matter emissions for PM10 and PM2.5 if the source is a combustion source. Do not include condensable particulate matter for PM unless PM is set equal to PM10 and PM2.5. Particulate matter (PM) is not subject to an ambient air quality standard, but it is a regulated air pollutant under PSD (20.2.74 NMAC) and Title V (20.2.70 NMAC).

[3] Flare Malfunction pph emission rates reflect worst case emissions modeled for this unit. Flare Malfunction pph rates are maximums allowed for this unit and not additive with Flare SSM pph rates or Flare Process emission rates in Table 106.A.

"*" Denotes an hourly emission rate is not appropriate

Table 2-G: Stack Exit and Fugitive Emission Rates for Special Stacks

☑ I have elected to leave this table blank because this facility does not have any stacks/vents that split emissions from a single source or combine emissions from more than one source listed in table 2-A. Additionally, the emission rates of all stacks match the Requested allowable emission rates stated in Table 2-E.

Use this table to list stack emissions (requested allowable) from split and combined stacks. List Toxic Air Pollutants (TAPs) and Hazardous Air Pollutants (HAPs) in Table 2-I. List all fugitives that are associated with the normal, routine, and non-emergency operation of the facility. Unit and stack numbering must correspond throughout the application package. Refer to Table 2-E for instructions on use of the "-" symbol and on significant figures.

Stack No.	Serving Unit Number(s) from Table 2-A	NOx		CO		VOC		SOx		PM		PM10		PM2.5		☐ H_2S or ☐ Lead	
		lb/hr	ton/yr	lb/hr	ton/yr	lb/hr	ton/yr	lb/hr	ton/yr	lb/hr	ton/yr	lb/hr	ton/yr	lb/hr	ton/yr	lb/hr	ton/yr
Totals:																	

Table 2-H: Stack Exit Conditions

Unit and stack numbering must correspond throughout the application package. Include the stack exit conditions for each unit that emits from a stack, including blowdown venting parameters and tank emissions. If the facility has multiple operating scenarios, complete a separate Table 2-H for each scenario and, for each, type scenario name here:

Stack Number	Serving Unit Number(s) from Table 2-A	Orientation (H-Horizontal V=Vertical)	Rain Caps (Yes or No)	Height Above Ground (ft)	Temp. (F)	Flow Rate		Moisture by Volume (%)	Velocity (ft/sec)	Inside Diameter (ft)
						(acfs)	(dscfs)			
1	1	V	No	30	907	1542	-	N/A	186	3.25
2	2	V	No	30	907	1542	-	N/A	186	3.25
5	5	V	No	40	907	1542	-	N/A	186	3.25
Flare	Flare	V	No	65	1832	421	-	N/A	65.6	2.90
3b	3b	V	No	35	800	171	-	N/A	2.05	1.33

Table 2-I: Stack Exit and Fugitive Emission Rates for HAPs and TAPs

In the table below, report the Potential to Emit for each HAP from each regulated emission unit listed in Table 2-A, only if the entire facility emits the HAP at a rate greater than or equal to one (1) ton per year For each such emission unit, HAPs shall be reported to the nearest 0.1 tpy. Each facility-wide Individual HAP total and the facility-wide Total HAPs shall be the sum of all HAP sources calculated to the nearest 0.1 ton per year. Per 20.2.72.403.A.1 NMAC, facilities not exempt [see 20.2.72.402.C NMAC] from TAP permitting shall report each TAP that has an uncontrolled emission rate in excess of its pounds per hour screening level specified in 20.2.72.502 NMAC. TAPs shall be reported using one more significant figure than the number of significant figures shown in the pound per hour threshold corresponding to the substance. Use the HAP nomenclature as it appears in Section 112 (b) of the 1990 CAAA and the TAP nomenclature as it listed in 20.2.72.502 NMAC. Include tank-flashing emissions estimates of HAPs in this table. For each HAP or TAP listed, fill all cells in this table with the emission numbers or a "-" symbol. A "-" symbol indicates that emissions of this pollutant are not expected or the pollutant is emitted in a quantity less than the threshold amounts described above.

Stack No.	Unit No.(s)	Total HAPs		Formaldehyde ☑ HAP or ☐ TAP		Acetaldehyde ☑ HAP or ☐ TAP		Benzene ☑ HAP or ☐ TAP		Toluene ☑ HAP or ☐ TAP		Xylenes ☑ HAP or ☐ TAP		Hexane ☑ HAP or ☐ TAP					
		lb/hr	ton/yr	lb/hr	ton/yr	lb/hr	ton/yr	lb/hr	ton/yr	lb/hr	ton/yr	lb/hr	ton/yr	lb/hr	ton/yr				
1	1	0.33	1.45	0.13	0.59	0.14	0.60	0.0043	0.019	0.0033	0.014	0.0099	0.043	0.012	0.052				
2	2	0.33	1.45	0.13	0.59	0.14	0.60	0.0043	0.019	0.0033	0.014	0.0099	0.043	0.012	0.052				
5	5	0.038	0.17	0.029	0.13	0.0016	0.0070	4.82E-04	0.0021	0.0052	0.023	0.0026	0.011	-	-				
3a	3a	-	-	-	-	-	-	-	-	-	-	-	-	-	-				
3b	3b	0.22	0.97	0.0016	0.0069	0.0014	0.0060	0.11	0.46	0.07	0.29	0.01	0.04	0.023	0.10				
T-008	T-008	*	0.79	-	-	-	-	*	0.086	0.0070	0.031	*	0.0027	*	0.67				
T-009	T-009																		
T-011	T-011																		
T-012	T-012																		
N/A	F-001	*	3.57	-	-	-	-	-	-	-	-	-	-	-	-				
LOAD	LOAD	*	0.45	-	-	-	-	*	0.043	*	7.00E-04	*	0.0012	*	0.39				
Flare	Flare (Process)	0.79	0.28	-	-	-	-	0.075	0.027	0.087	0.031	0.058	0.021	0.56	0.20				
Flare	Flare (SSM)	0.0080	2.07E-04	-	-	-	-	-	-	-	-	-	-	0.0080	2.07E-04				
VENT (SSM)	VENT (SSM)	*	0.69	-	-	-	-	*	0.11	*	0.075	*	0.010	*	0.49				
N/A	MALF	-	-	-	-	-	-	-	-	-	-	-	-	-	-				
Totals:		1.72	9.81	0.30	1.31	0.28	1.22	0.19	0.76	0.19	0.48	0.09	0.17	0.61	1.96				

Table 2-J: Fuel

Specify fuel characteristics and usage. Unit and stack numbering must correspond throughout the application package.

Unit No.	Fuel Type (low sulfur Diesel, ultra low sulfur diesel, Natural Gas, Coal, …)	Fuel Source: purchased commercial, pipeline quality natural gas, residue gas, raw/field natural gas, process gas (e.g. SRU tail gas) or other	Specify Units				
			Lower Heating Value	Hourly Usage	Annual Usage	% Sulfur	% Ash
1	Natural Gas	Pipeline Quality Natural Gas	1,200 Btu/scf	35.3 Mscf	309 MMscf	5%	Negligible
2	Natural Gas	Pipeline Quality Natural Gas	1,200 Btu/scf	35.3 Mscf	309 MMscf	5%	Negligible
3a	Natural Gas	Pipeline Quality Natural Gas	1,200 Btu/scf	2.5 Mscf	21.9 MMscf	5%	Negligible
5	Natural Gas	Pipeline Quality Natural Gas	1,200 Btu/scf	32.4 Mscf	284 MMscf	5%	Negligible
Flare (Process)	Natural Gas	Pipeline Quality Natural Gas	1,200 Btu/scf	0.10 Mscf	0.88 MMscf	5%	Negligible

Table 2-K: Liquid Data for Tanks Listed in Table 2-L

For each tank, list the liquid(s) to be stored in each tank. If it is expected that a tank may store a variety of hydrocarbon liquids, enter "mixed hydrocarbons" in the Composition column for that tank and enter the corresponding data of the most volatile liquid to be stored in the tank. If tank is to be used for storage of different materials, list all the materials in the "All Calculations" attachment, run the newest version of TANKS on each, and use the material with the highest emission rate to determine maximum uncontrolled and requested allowable emissions rate. The permit will specify the most volatile category of liquids that may be stored in each tank. Include appropriate tank-flashing modeling input data. Use additional sheets if necessary. Unit and stack numbering must correspond throughout the application package.

Tank No.	SCC Code	Material Name	Composition	Liquid Density (lb/gal)	Vapor Molecular Weight (lb/lb*mol)	Average Storage Conditions		Max Storage Conditions	
						Temperature (°F)	True Vapor Pressure (psia)	Temperature (°F)	True Vapor Pressure (psia)
T-008	40400311	Stabilized Condensate	Mixed Hydrocarbons	Unknown	65	74.1	7.5	87.1	9.4
T-009	40400311	Stabilized Condensate	Mixed Hydrocarbons	Unknown	65	74.1	7.5	87.1	9.4
T-011	40400311	Stabilized Condensate	Mixed Hydrocarbons	Unknown	65	74.1	7.5	87.1	9.4
T-012	40400311	Stabilized Condensate	Mixed Hydrocarbons	Unknown	65	74.1	7.5	87.1	9.4

Table 2-L: Tank Data

Include appropriate tank-flashing modeling input data. Use an addendum to this table for unlisted data categories. Unit and stack numbering must correspond throughout the application package. Use additional sheets if necessary. See reference Table 2-L2. Note: 1.00 bbl = 10.159 M3 = 42.0 gal

Tank No.	Date Installed	Materials Stored	Seal Type (refer to Table 2-LR below)	Roof Type (refer to Table 2-LR below)	Capacity		Diameter (m)	Vapor Space (m)	Color (from Table VI-C)		Paint Condition (from Table VI-C)	Annual Throughput (gal/yr)	Turn-overs (per year)
					(bbl)	(m^3)			Roof	Shell			
T-008	2013	Stabilized Condensate	N/A	FX	300	48	3.7	4.6	MG	MG	Good	2,912,700	231.17
T-009	<8/23/2011	Stabilized Condensate	N/A	FX	300	48	3.7	4.6	MG	MG	Good	2,912,700	231.17
T-011	<8/23/2011	Stabilized Condensate	N/A	FX	300	48	3.7	4.6	MG	MG	Good	2,912,700	231.17
T-012	<8/23/2011	Stabilized Condensate	N/A	FX	300	48	3.7	4.6	MG	MG	Good	2,912,700	231.17

Table 2-L2: Liquid Storage Tank Data Codes Reference Table

Roof Type	Seal Type, Welded Tank Seal Type		Seal Type, Riveted Tank Seal Type		Roof, Shell Color	Paint Condition
FX: Fixed Roof	**Mechanical Shoe Seal**	**Liquid-mounted resilient seal**	**Vapor-mounted resilient seal**	**Seal Type**	**WH**: White	Good
IF: Internal Floating Roof	**A**: Primary only	**A**: Primary only	**A**: Primary only	**A**: Mechanical shoe, primary only	**AS**: Aluminum (specular)	Poor
EF: External Floating Roof	**B**: Shoe-mounted secondary	**B**: Weather shield	**B**: Weather shield	**B**: Shoe-mounted secondary	**AD**: Aluminum (diffuse)	
P: Pressure	**C**: Rim-mounted secondary	**C**: Rim-mounted s	**C**: Rim-mounted secondary	**C**: Rim-mounted secondary	**LG**: Light Gray	
					MG: Medium Gray	
					BL: Black	
					OT: Other (specify)	

Note: 1.00 bbl = 0.159 M^3 = 42.0 gal

Table 2-M: Materials Processed and Produced (Use additional sheets as necessary.)

Material Processed				Material Produced			
Description	**Chemical Composition**	**Phase**	**Quantity (specify units)**	**Description**	**Chemical Composition**	**Phase**	**Quantity (specify units)**
Field Natural Gas	Metehane, low concentration VOC's	Gas	200 MMscf/day	Dry Gas	Methane, low concentration VOCs	G	200 MMscf/day
				Produced Water	Water with trace hydrocarbons	L	N/A (not a regulated substance)
				Stabilized Condensate	Heavy hydrocarbons	L	190 bbl/day

Table 2-N: CEM Equipment

Enter Continuous Emissions Measurement (CEM) Data in this table. If CEM data will be used as part of a federally enforceable permit condition, or used to satisfy the requirements of a state or federal regulation, include a copy of the CEM's manufacturer specification sheet in the Information Used to Determine Emissions attachment. Unit and stack numbering must correspond throughout the application package. Use additional sheets if necessary.

Stack No.	Pollutant(s)	Manufacturer	Model No.	Serial No.	Sample Frequency	Averaging Time	Range	Sensitivity	Accuracy
N/A - No CEM equipment at this facility.									

Table 2-O: Parametric Emissions Measurement Equipment

Unit and stack numbering must correspond throughout the application package. Use additional sheets if necessary.

Unit No.	Parameter/Pollutant Measured	Location of Measurement	Unit of Measure	Acceptable Range	Frequency of Maintenance	Nature of Maintenance	Method of Recording	Averaging Time
N/A - No PEM equipment at this facility.								

Table 2-P: Greenhouse Gas Emissions

Applications submitted under 20.2.70, 20.2.72, & 20.2.74 NMAC are required to complete this Table. Power plants, Title V major sources, and PSD major sources must report and calculate all GHG emissions for each unit. Applicants must report potential emission rates in short tons per year (see Section 6.a for assistance). Include GHG emissions during Startup, Shutdown, and Scheduled Maintenance in this table. For minor source facilities that are not power plants, are not Title V, or are not PSD, there are three options for reporting GHGs 1) report GHGs for each individual piece of equipment; 2) report all GHGs from a group of unit types, for example report all combustion source GHGs as a single unit and all venting GHG as a second separate unit; OR 3) check the following box ☐ By checking this box, the applicant acknowledges the total CO2e emissions are less than 75,000 tons per year.

		CO_2 ton/yr	N_2O ton/yr	CH_4 ton/yr	SF_6 ton/yr	PFC/HFC ton/yr[2]									Total GHG Mass Basis ton/yr[4]	Total CO_2e ton/yr[5]
Unit No.	**GWPs [1]**	**1**	**298**	**25**	**22,800**	**footnote 3**										
1	**mass GHG**	21685.12	0.04	0.41	-	-									21685.57	
	CO_2e	21685.12	12.18	10.22	-	-										21707.51
2	**mass GHG**	21685.12	0.04	0.41	-	-									21685.57	
	CO_2e	21685.12	12.18	10.22	-	-										21707.52
5	**mass GHG**	20596.87	0.04	0.39	-	-									20597.29	
	CO_2e	20596.87	11.57	9.70	-	-										20618.14
3a	**mass GHG**	-	-	-	-	-									-	
	CO_2e	-	-	-	-	-										-
3b	**mass GHG**	1537.07	0.0029	0.029	-	-									1537.10	
	CO_2e	1537.07	0.86	12.06	-	-										1549.99
T-008	**mass GHG**	-	-	-	-	-									-	
	CO_2e	-	-	-	-	-										-
T-009	**mass GHG**	-	-	-	-	-									-	
	CO_2e	-	-	-	-	-										-
T-011	**mass GHG**	-	-	-	-	-									-	
	CO_2e	-	-	-	-	-										-
T-012	**mass GHG**	-	-	-	-	-									-	
	CO_2e	-	-	-	-	-										-
F-001	**mass GHG**	-	-	-	-	-									-	
	CO_2e	-	-	-	-	-										-
LOAD	**mass GHG**	-	-	-	-	-									-	
		-	-	-	-	-										-
HAUL	**mass GHG**	-	-	-	-	-									-	
	CO_2e	-	-	-	-	-										-
Flare (process)	**mass GHG**	5146.41	0.01	8.71	-	-									5155.13	
	CO_2e	5146.41	2.74	217.66	-	-										5366.81
Flare (SSM)	**mass GHG**	6842.42	0.01	5.02	-	-									6847.46	
	CO_2e	6842.42	3.20	125.54	-	-										6971.17
Vent (SSM)	**mass GHG**	4.00	-	70.00	-	-									74.00	
	CO_2e	4.00	-	1750.50	-	-										1754.57
MALF	**mass GHG**	-	-	-	-	-									-	
	CO2e	-	-	-	-	-										-
Total	**mass GHG**	55811.88	0.10	84.56	-	-									55896.55	
	CO_2e	77497.00	42.73	2135.90	-	-										79675.63

[1] **GWP** (Global Warming Potential): Applicants must use the most current GWPs codified in Table A-1 of 40 CFR part 98. GWPs are subject to change, therefore, applicants need to check 40 CFR 98 to confirm GWP values.

[2] For **HFCs** or **PFCs** describe the specific HFC or PFC compound and use a separate column for each individual compound.

[3] For each new compound, enter the appropriate GWP for each HFC or PFC compound from Table A-1 in 40 CFR 98.

[4] Green house gas emissions on a **mass basis** is the ton per year green house gas emission before adjustment with its GWP.

[5] **CO_2e** means Carbon Dioxide Equivalent and is calculated by multiplying the TPY mass emissions of the green house gas by its GWP.

Section 3

Application Summary

The **Application Summary** shall include a brief description of the facility and its process, the type of permit application, the applicable regulation (i.e. 20.2.72.200.A.X, or 20.2.73 NMAC) under which the application is being submitted, and any air quality permit numbers associated with this site. If this facility is to be collocated with another facility, provide details of the other facility including permit number(s). In case of a revision or modification to a facility, provide the lowest level regulatory citation (i.e. 20.2.72.219.B.1.d NMAC) under which the revision or modification is being requested. Also describe the proposed changes from the original permit, how the proposed modification will affect the facility's operations and emissions, de-bottlenecking impacts, and changes to the facility's major/minor status (both PSD & Title V).

The **Process Summary** shall include a brief description of the facility and its processes.

Startup, Shutdown, and Maintenance (SSM) routine or predictable emissions: Provide an overview of how SSM emissions are accounted for in this application. Refer to "Guidance for Submittal of Startup, Shutdown, Maintenance Emissions in Permit Applications (http://www.env.nm.gov/aqb/permit/app_form.html) for more detailed instructions on SSM emissions.

Enterprise Field Services, LLC (Enterprise) is submitting this application and accompanying material pursuant to 20.2.70.404.C(1)(a) NMAC to apply for a significant modification to the existing Title V major source permit for the South Carlsbad Compressor Station (South Carlsbad). The facility is located approximately 2.8 miles northwest of Loving, NM in Eddy County and is currently operating under Title V Permit No. P130R3M1. The facility is currently major with respect to Title V and is minor with respect to PSD and will remain so with this modification.

The Title V Significant Modification will reflect the changes incorporated to NSR 0220-M11 which include:

- Addition of one Solar Centaur turbine (unit 5);
- Removal of the the dew-point plant , amine unit (4a) and amine heater (4b) and associated amine flare;
- Revision of the glycol dehydrator (3a) regen and flash streams to be sent back to the fuel system;
- Condensate and loadout throughputs will remain the same as currently permitted.
- Slop tank (Unit T-006, NSR-exempt tank) and condensate tank (Units T-008 to T-012) emissions were also updated using BR&E ProMax and updated throughputs.
- Emissions for Unit 3b were reduced to account for controls before the unit.
- Flaring limits for SSM/M increased based on a revised Promax simulation. Hourly MALF flare emissions increased based on new malfunction scenario assumptions.

The facility is a natural gas compressor station. Gas enters the facility through a separator and is compressed by three gas turbine-driven compressors (Units 1, 2, & 5). After inlet compression, gas is sent to a glycol dehydrator and then to a chiller and cold separator, where liquids (primarily water) condense and are removed from the stream. The dry gas stream then goes to a pipeline for transport.

Startup, Shutdown, and Maintenance (SSM) routine or predictable emissions**:** Startup, Shutdown, and Maintenance (SSM) emissions are controlled by the process and SSM flare. This facility is currently permitted to vent VOC emissions during SSM events (Unit VENT (SSM)).

Section 4

Process Flow Sheet

A **process flow sheet** and/or block diagram indicating the individual equipment, all emission points and types of control applied to those points. The unit numbering system should be consistent throughout this application.

A process flow sheet is attached.

Enterprise Products
Enterprise Products Partners L.P.

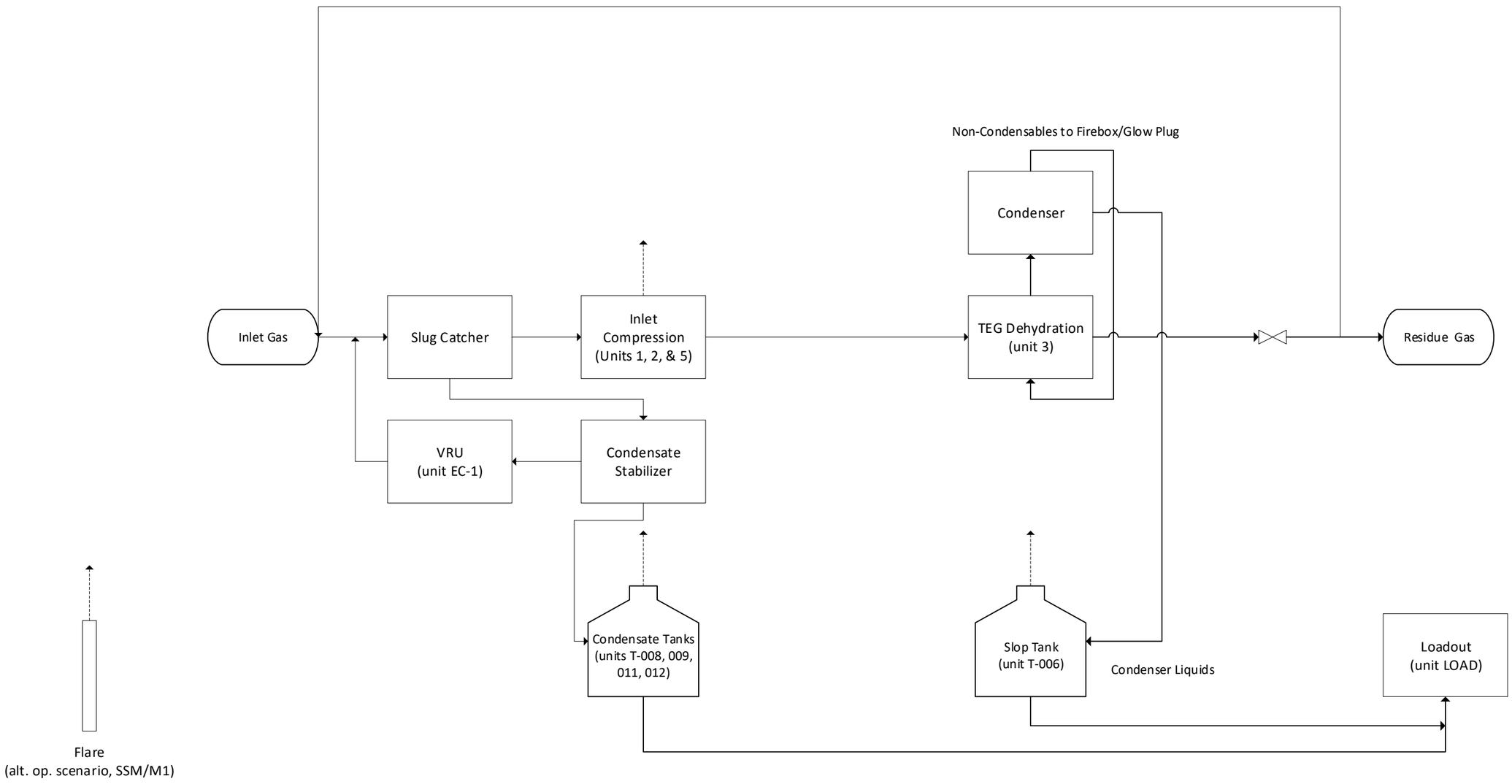

South Carlsbad

32° 18’ 55.54” N 104° 08’ 11.55” W

Section 5

Plot Plan Drawn To Scale

A **plot plan drawn to scale** showing emissions points, roads, structures, tanks, and fences of property owned, leased, or under direct control of the applicant. This plot plan must clearly designate the restricted area as defined in UA1, Section 1-D.12. The unit numbering system should be consistent throughout this application.

A plot plan is attached.

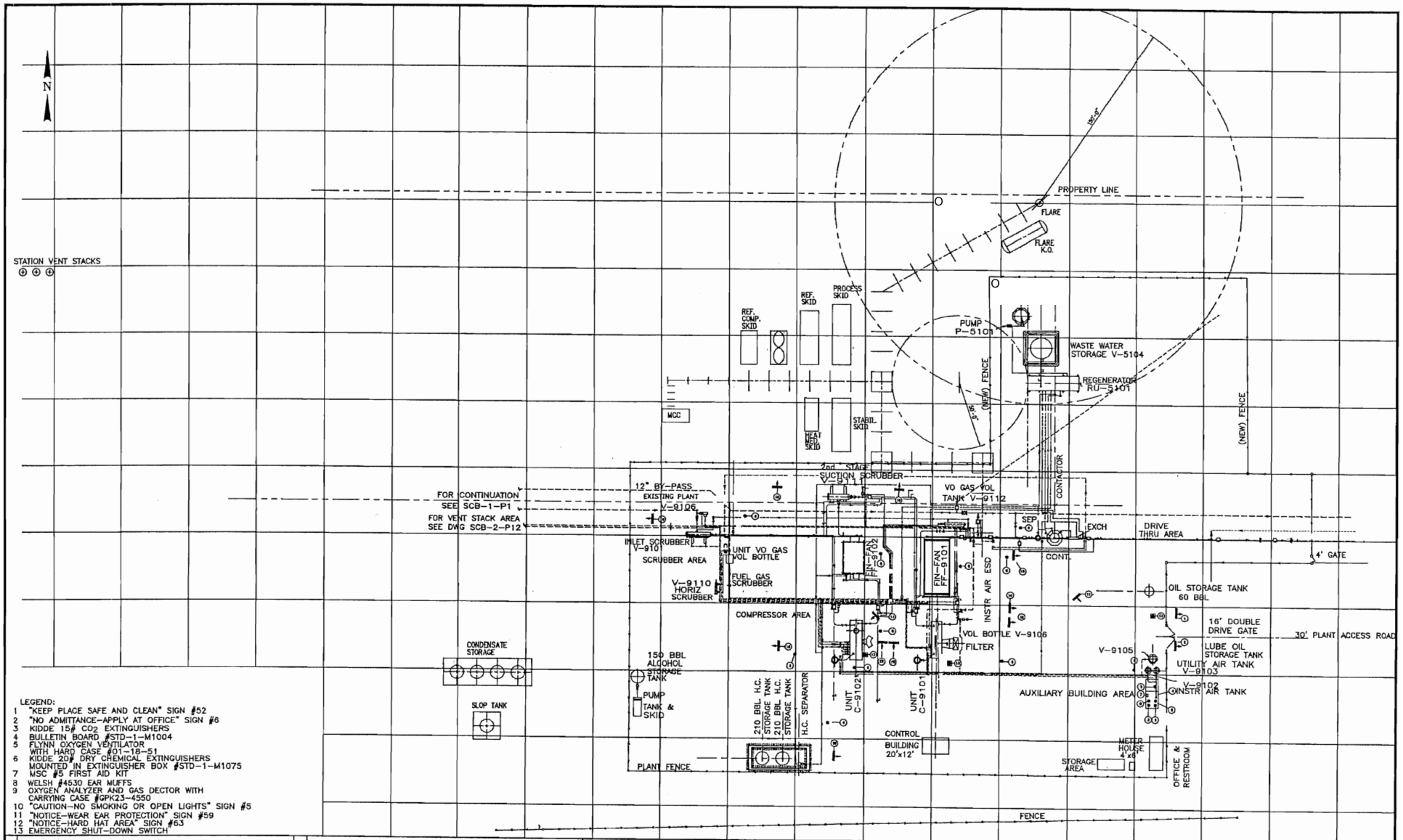

LEGEND:
1 "KEEP PLACE SAFE AND CLEAN" SIGN #52
2 "NO ADMITTANCE-APPLY AT OFFICE" SIGN #6
3 KIDDE 15# CO_2 EXTINGUISHERS
4 BULLETIN BOARD #STD-1-M1004
5 FLYNN OXYGEN VENTILATOR WITH HARD CASE #01-18-51
6 KIDDE 20# DRY CHEMICAL EXTINGUISHERS MOUNTED IN EXTINGUISHER BOX #STD-1-M1075
7 MSC #5 FIRST AID KIT
8 WELSH #4530 EAR MUFFS
9 OXYGEN ANALYZER AND GAS DECTOR WITH CARRYING CASE #GPK23-4550
10 "CAUTION-NO SMOKING OR OPEN LIGHTS" SIGN #5
11 "NOTICE-WEAR EAR PROTECTION" SIGN #59
12 "NOTICE-HARD HAT AREA" SIGN #63
13 EMERGENCY SHUT-DOWN SWITCH

NO.	DATE	BY	DESCRIPTION	W.O.	APP.	PRT. SEP.	DATE	TO	W.O.
B	3/27/06	SO	REVISED PDX OPERATIONS REVIEW MEETING		BJB				
A	3/19/06	CM	ISSUE FOR APPROVAL	MNM	BJB				

REVISIONS

ENG. RECORD		DATE
DRAFTING DESIGN	MNM	03/10/06
CAD DRAFTING	CM	03/10/06
CHECKED		
PROJECT APPROVAL		
SURVEY DATE		
P/W NUMBER		
COMPUTER SAVE NAME	SCB-8-P1	

PRINT RECORD

ENTERPRISE FIELD SERVICES LLC

SOUTH CARLSBAD DEW POINT PLANT

COMBINED PLOT PLAN

SCALE: 1:30 | W.O.:

DWG. NO. SCB-8-P1 | REV. B

LEGEND | DWG. NO. | TITLE | REFERENCE DRAWINGS

Section 6

All Calculations

Show all calculations used to determine both the hourly and annual controlled and uncontrolled emission rates. All calculations shall be performed keeping a minimum of three significant figures. Document the source of each emission factor used (if an emission rate is carried forward and not revised, then a statement to that effect is required). If identical units are being permitted and will be subject to the same operating conditions, submit calculations for only one unit and a note specifying what other units to which the calculations apply. All formulas and calculations used to calculate emissions must be submitted. The "Calculations" tab in the UA2 has been provided to allow calculations to be linked to the emissions tables. Add additional "Calc" tabs as needed. If the UA2 or other spread sheets are used, all calculation spread sheet(s) shall be submitted electronically in Microsoft Excel compatible format so that formulas and input values can be checked. Format all spread sheets and calculations such that the reviewer can follow the logic and verify the input values. Define all variables. If calculation spread sheets are not used, provide the original formulas with defined variables. Additionally, provide subsequent formulas showing the input values for each variable in the formula. All calculations, including those calculations are imbedded in the Calc tab of the UA2 portion of the application, the printed Calc tab(s), should be submitted under this section.

Tank Flashing Calculations: The information provided to the AQB shall include a discussion of the method used to estimate tank-flashing emissions, relative thresholds (i.e., NOI, permit, or major source (NSPS, PSD or Title V)), accuracy of the model, the input and output from simulation models and software, all calculations, documentation of any assumptions used, descriptions of sampling methods and conditions, copies of any lab sample analysis. If Hysis is used, all relevant input parameters shall be reported, including separator pressure, gas throughput, and all other relevant parameters necessary for flashing calculation.

SSM Calculations: It is the applicant's responsibility to provide an estimate of SSM emissions or to provide justification for not doing so. In this Section, provide emissions calculations for Startup, Shutdown, and Routine Maintenance (SSM) emissions listed in the Section 2 SSM and/or Section 22 GHG Tables and the rational for why the others are reported as zero (or left blank in the SSM/GHG Tables). Refer to "Guidance for Submittal of Startup, Shutdown, Maintenance Emissions in Permit Applications (http://www.env.nm.gov/aqb/permit/app_form.html) for more detailed instructions on calculating SSM emissions. If SSM emissions are greater than those reported in the Section 2, Requested Allowables Table, modeling may be required to ensure compliance with the standards whether the application is NSR or Title V. Refer to the Modeling Section of this application for more guidance on modeling requirements.

Glycol Dehydrator Calculations: The information provided to the AQB shall include the manufacturer's maximum design recirculation rate for the glycol pump. If GRI-Glycalc is used, the full input summary report shall be included as well as a copy of the gas analysis that was used.

Road Calculations: Calculate fugitive particulate emissions and enter haul road fugitives in Tables 2-A, 2-D and 2-E for:

1. If you transport raw material, process material and/or product into or out of or within the facility and have PER emissions greater than 0.5 tpy.
2. If you transport raw material, process material and/or product into or out of the facility more frequently than one round trip per day.

Significant Figures:

A. All emissions standards are deemed to have at least two significant figures, but not more than three significant figures.

B. At least 5 significant figures shall be retained in all intermediate calculations.

C. In calculating emissions to determine compliance with an emission standard, the following rounding off procedures shall be used:

(1) If the first digit to be discarded is less than the number 5, the last digit retained shall not be changed;

(2) If the first digit discarded is greater than the number 5, or if it is the number 5 followed by at least one digit other than the number zero, the last figure retained shall be increased by one unit; **and**

(3) If the first digit discarded is exactly the number 5, followed only by zeros, the last digit retained shall be rounded upward if it is an odd number, but no adjustment shall be made if it is an even number.

(4) The final result of the calculation shall be expressed in the units of the standard.

Control Devices: In accordance with 20.2.72.203.A(3) and (8) NMAC, 20.2.70.300.D(5)(b) and (e) NMAC, and 20.2.73.200.B(7) NMAC, the permittee shall report all control devices and list each pollutant controlled by the control device

regardless if the applicant takes credit for the reduction in emissions. The applicant can indicate in this section of the application if they chose to not take credit for the reduction in emission rates. For notices of intent submitted under 20.2.73 NMAC, only uncontrolled emission rates can be considered to determine applicability unless the state or federal Acts require the control. This information is necessary to determine if federally enforceable conditions are necessary for the control device, and/or if the control device produces its own regulated pollutants or increases emission rates of other pollutants.

Solar Centaur T-4702 turbines (Units 1 & 2)
NO_X and CO emission rates were updated using historical stack test results obtained from 2010 to 2016 stack tests with a safety factor. VOC emission rates are reproduced here from previous applications. SO_2 emissions are based on a conservative fuel sulfur content estimated of 5 gr S/100 scf and 100% conversion of elemental sulfur to SO_2. Particulate emission rates ($PM_{2.5}$, PM_{10}, and TSP) were updated based on Solar Turbines Inc, Product Information Letter 171, refer to Section 7. Total and individual HAP emissions are calculated using GRI-HAPCalc 3.01. Greenhouse gas emissions are estimated using emission factors from 40 CFR 98 Subpart C Tables C-1 and C-2.

Solar Centaur 40-4700S (Unit 5)
NO_X, CO, and VOC emission rates were calculated using manufacturer specifications. SO_2 emissions are based on a conservative fuel sulfur content estimated of 5 gr S/100 scf and 100% conversion of elemental sulfur to SO_2. Particulate ($PM_{2.5}$, PM_{10}, and TSP) and HAP emissions were calculated using AP-42 Table 3.1-2a. Greenhouse gas emissions are estimated using emission factors from 40 CFR 98 Subpart C Tables C-1 and C-2.

Glycol Dehydrator and Reboiler (Units 3a & 3b)
Glycol dehydrator emissions were updated using GRI GlyCalc and an extended gas analysis. VOC and HAP emissions from the regenerator are controlled with a BTEX condenser. Flash tank emissions are sent to the fuel line and are 100% controlled. The condenser overheads are routed to the reboiler where VOC and HAP emissions are combusted and controlled with a 98% efficiency.

NO_X, CO, VOC an PM emission were calculated using emission factors from AP-42 Tables 1.4-1 and 1.4-2 taking into consideration that fuel heat value of the natural gas of 1,200 Btu/scf. Therefore, these emission factors were adjusted to account for the heat value difference.

Stabilized Condensate Storage Tanks (Units T-008, T-009, T-011, & T-012)
Working and breathing emissions from T-008, T-009, T-011, and T-012 are calculated in this application using a BR&E ProMax simulation.

Exempt Storage Tanks (Units T-001 through T-006)
Methanol storage tanks (T-002) and slop oil tank (T-006) are exempt pursuant to 20.2.72.202.B.(5) NMAC. Emissions from T-002 were conservatively estimated based on 3 anticipated turnovers per year. Emissions from T-006 were calculated with BR&E ProMax using condenser liquid streams from the GRI-GLYCalc process simulation. Emission calculations for both of these units are included in the application for reference. All other storage tanks at South Carlsbad Compressor Station are either exempt because they contain liquids with vapor pressure less than 10mmHg (T-001, T-004, and T-005) or are not a source of regulated pollutants (T-003).

Condensate Loading Emissions (Unit LOAD)
ProMax and GRI-HAPCalc were used to perform the loading emissions calculations. Specifically, a RVP11 ProMax simulation was used to determine the stream composition.

Unpaved Haul Road Emissions (Unit HAUL)
These emissions were calculated using Equation 2 of AP-42 Section 13.2.2. Haul road emissions at this facility are exempt pursuant to 20.2.72.202.B(5) NMAC. Emission calculations are included in the application for reference.

Flare (Unit Flare)
Emission calculations were updated to account for the possible presence of H_2S. An H2S composition of 0.5 mol % was assumed. Emissions of NO_x and CO are calculated using the larger of the AP-42 Table 13.5-1 and TNRCC RG-109 emission factors. Pilot H_2S emissions are calculated based on the conservative estimate of 0.25 g H_2S/100 scf and a 98% combustion efficiency of the flare. Pilot SO_2 emissions are based on a conservative fuel sulfur content estimated of 5 gr S/100 scf and 100% conversion of elemental sulfur to SO_2. SO_2 emissions were calculated assuming 98% combustion efficiency and conversion to SO_2. Emissions of VOCs and HAPs are estimated based on the gas analysis and an assumed 98% combustion efficiency.

During non-routine conditions such as when gas must be released from portions of the facility for maintenance or in the event

of an emergency, some VOCs will be directed to the flare. Gas streams 14 and 33 will be directed to the flare in the event of a plant shutdown. Additionally, during an emergency shutdown, pressure vessels or the gas contents of the refrigeration system may be released to the flare; however, the quantity of gas in these vessels or systems is less than the assumed maximum gas volume from streams 14 and 33.

Flare parameters are calculated using a temperature of 1000˚ C and a 20 m/sec velocity (per NMAQB guidelines), and an effective diameter calculated in accordance with the Modeling Guidelines.

Greenhouse gas emissions were estimated using 40 CFR 98 Subpart W calculation methodology.

Vent (Unit VENT)
A RVP11 Promax simulation was used to determine the emissions associated to this unit based on the mole fraction calculated for different components found on the SC Vapor process stream located before the first stage compressor. In addition, to overcome H_2S possible molar fraction changes, it was assumed 0.05% mole instead of zero, as forecasted by the mentioned simulation.

From time to time, the pressurized gas in a portion of the facility's system must be vented in order to relieve the pressure. At South Carlsbad Compressor Station, this is primarily done in order to perform maintenance on the compressors and the compressor turbines (Units 1 and 2). This pressure relief is termed "blow down". Blow down at this facility is and will continue to be directed to various vents, including but not limited to pressure relief valves and blowdown vent stacks, aggregated in this application as unit VENT.

During routine startup, shutdown, or blow down events, gas from the turbines is diverted to unit VENT. A table of the inlet gas composition (based on the combined gas analysis) and the anticipated number of blow down events per year (conservatively estimated) is included in this section. Venting volume and frequency were estimated based on operating history and engineering knowledge. It is assumed that the gas being vented will contain a maximum of 10 ppmv of H_2S.

Maximum hourly venting emissions were calculated assuming 1 hour per event for a worst-case scenario. Annual venting emissions were calculated using the total volume of gas vented annually based on the estimate of predicted annual events with a safety factor of 100% to overcome for components variations. In addition, a molar concentration of 0.05% of H_2S was assumed since the analysis used did not showed any H_2S concentration.

Fugitive Emissions (Unit F-001)
Fugitive emission calculations were completed using emission factors from Table 2-4 of EPA Protocol for Equipment Leak Emission Estimates, 1995. Subcomponent counts for each subcomponent are based on estimated average component counts for each piece of equipment.

Section 6.a

Green House Gas Emissions

(Submitting under 20.2.70, 20.2.72 20.2.74 NMAC)

Title V (20.2.70 NMAC), Minor NSR (20.2.72 NMAC), and PSD (20.2.74 NMAC) applicants must estimate and report greenhouse gas (GHG) emissions to verify the emission rates reported in the public notice, determine applicability to 40 CFR 60 Subparts, and to evaluate Prevention of Significant Deterioration (PSD) applicability. GHG emissions that are subject to air permit regulations consist of the sum of an aggregate group of these six greenhouse gases: carbon dioxide (CO_2), nitrous oxide (N_2O), methane (CH_4), hydrofluorocarbons (HFCs), perfluorocarbons (PFCs), and sulfur hexafluoride (SF_6).

Calculating GHG Emissions:

1. Calculate the ton per year (tpy) GHG mass emissions and GHG CO_2e emissions from your facility.
2. GHG mass emissions are the sum of the total annual tons of greenhouse gases without adjusting with the global warming potentials (GWPs). GHG CO_2e emissions are the sum of the mass emissions of each individual GHG multiplied by its GWP found in Table A-1 in 40 CFR 98 Mandatory Greenhouse Gas Reporting.
3. Emissions from routine or predictable start up, shut down, and maintenance must be included.
4. Report GHG mass and GHG CO_2e emissions in Table 2-P of this application. Emissions are reported in **short** tons per year and represent each emission unit's Potential to Emit (PTE).
5. All Title V major sources, PSD major sources, and all power plants, whether major or not, must calculate and report GHG mass and CO2e emissions for each unit in Table 2-P.
6. For minor source facilities that are not power plants, are not Title V, and are not PSD there are three options for reporting GHGs in Table 2-P: 1) report GHGs for each individual piece of equipment; 2) report all GHGs from a group of unit types, for example report all combustion source GHGs as a single unit and all venting GHGs as a second separate unit; 3) or check the following □ By checking this box, the applicant acknowledges the total CO2e emissions are less than 75,000 tons per year.

Sources for Calculating GHG Emissions:

- Manufacturer's Data
- AP-42 Compilation of Air Pollutant Emission Factors at http://www.epa.gov/ttn/chief/ap42/index.html
- EPA's Internet emission factor database WebFIRE at http://cfpub.epa.gov/webfire/
- 40 CFR 98 Mandatory Green House Gas Reporting except that tons should be reported in short tons rather than in metric tons for the purpose of PSD applicability.
- API Compendium of Greenhouse Gas Emissions Methodologies for the Oil and Natural Gas Industry. August 2009 or most recent version.
- Sources listed on EPA's NSR Resources for Estimating GHG Emissions at http://www.epa.gov/nsr/clean-air-act-permitting-greenhouse-gases:

Global Warming Potentials (GWP):
Applicants must use the Global Warming Potentials codified in Table A-1 of the most recent version of 40 CFR 98 Mandatory Greenhouse Gas Reporting. The GWP for a particular GHG is the ratio of heat trapped by one unit mass of the GHG to that of one unit mass of CO_2 over a specified time period.

"Greenhouse gas" for the purpose of air permit regulations is defined as the aggregate group of the following six gases: carbon dioxide, nitrous oxide, methane, hydrofluorocarbons, perfluorocarbons, and sulfur hexafluoride. **(20.2.70.7 NMAC, 20.2.74.7 NMAC).** You may also find GHGs defined in 40 CFR 86.1818-12(a).

Metric to Short Ton Conversion:
Short tons for GHGs and other regulated pollutants are the standard unit of measure for PSD and title V permitting programs. 40 CFR 98 Mandatory Greenhouse Reporting requires metric tons.
1 metric ton = 1.10231 short tons (per Table A-2 to Subpart A of Part 98 – Units of Measure Conversions)

Maximum Uncontrolled Emissions

Equipment	NO_x		CO		VOC		SO_x		PM		PM_{10}		$PM_{2.5}$		H_2S	
	lb/hr	tpy	lb/hr	tpy	lb/hr	tpy	lb/hr	tpy	lb/hr	tpy	lb/hr	tpy	lb/hr	tpy	lb/hr	tpy
1	27.00	90.82	7.40	11.25	0.77	3.37	0.50	2.21	0.63	2.78	0.63	2.78	0.63	2.78	2.5E-04	0.0011
2	27.00	90.82	7.40	11.25	0.77	3.37	0.50	2.21	0.63	2.78	0.63	2.78	0.63	2.78	2.5E-04	0.0011
5	4.43	19.40	5.89	25.78	1.40	6.15	0.48	2.10	0.27	1.16	0.27	1.16	0.27	1.16	2.4E-04	0.0010
3a	-	-	-	-	73.65	322.57	-	-	-	-	-	-	-	-	-	-
3b	0.29	1.29	0.25	1.08	0.016	0.071	0.036	0.16	0.022	0.098	0.022	0.098	0.022	0.098	8.9E-04	0.0039
T-008																
T-009	-	-	-	-	*	18.85	-	-	-	-	-	-	-	-	-	-
T-011																
T-012																
F-001	-	-	-	-	*	35.85	-	-	-	-	-	-	-	-	-	-
LOAD	-	-	-	-	*	9.82	-	-	-	-	-	-	-	-	-	-
Flare (Process)	7.79	2.82	62.84	22.65	61.88	22.28	0.11	0.46	-	-	-	-	-	-	0.056	0.020
Flare (SSM)	7.73	0.20	62.48	1.62	76.13	1.98	-	-	-	-	-	-	-	-	-	-
VENT (SSM)	-	-	-	-	*	26.81	-	-	-	-	-	-	-	-	*	0.097
MALF[1]	15.52	7.00	125.32	10.00	138.01	10.00	0.11	10.00	-	-	-	-	-	-	0.056	2.00
Total	**89.76**	**212.35**	**271.57**	**83.63**	**352.62**	**461.12**	**1.73**	**17.12**	**1.56**	**6.82**	**1.56**	**6.82**	**1.56**	**6.82**	**0.114**	**2.12**

"*" Denotes an hourly emission rate is not appropriate

"-" Indicates emissions of this pollutant are not expected

[1] Flare malfunction hourly emission rates reflect worst case emissions modeled for this unit. These emissions are the maximum allowed for the flare and are not additive with the Process and SSM emissions requested under Unit Flare.

Controlled Emissions

Equipment	NO_x		CO		VOC		SO_x		PM		PM_{10}		$PM_{2.5}$		H_2S	
	lb/hr	tpy	lb/hr	tpy	lb/hr	tpy	lb/hr	tpy	lb/hr	tpy	lb/hr	tpy	lb/hr	tpy	lb/hr	tpy
1	27.00	90.82	7.40	11.25	0.77	3.37	0.50	2.21	0.63	2.78	0.63	2.78	0.63	2.78	2.5E-04	0.0011
2	27.00	90.82	7.40	11.25	0.77	3.37	0.50	2.21	0.63	2.78	0.63	2.78	0.63	2.78	2.5E-04	0.0011
5	4.43	19.40	5.89	25.78	1.40	6.15	0.48	2.10	0.27	1.16	0.27	1.16	0.27	1.16	2.4E-04	0.0010
3a	-	-	-	-	-	-	-	-	-	-	-	-	-	-	-	-
3b	0.045	0.20	0.038	0.17	0.87	3.80	0.0065	0.028	0.0034	0.015	0.0034	0.02	0.0034	0.015	1.6E-04	7.1E-04
T-008																
T-009	-	-	-	-	*	18.85	-	-	-	-	-	-	-	-	-	-
T-011																
T-012																
F-001	-	-	-	-	*	35.85	-	-	-	-	-	-	-	-	-	-
LOAD	-	-	-	-	*	9.82	-	-	-	-	-	-	-	-	-	-
Flare (Process)	7.79	2.82	62.84	22.65	61.88	22.28	0.11	0.46	-	-	-	-	-	-	0.056	0.020
Flare (SSM)	7.73	0.201	62.5	1.62	76.13	1.98	-	-	-	-	-	-	-	-	-	-
VENT (SSM)	-	-	-	-	*	26.81	-	-	-	-	-	-	-	-	*	0.097
MALF[1]	15.52	7.00	125.32	10.00	138.01	10.00	0.11	10.00	-	-	-	-	-	-	0.056	2.00
Total	**89.51**	**211.26**	**271.36**	**82.71**	**279.82**	**142.28**	**1.70**	**16.99**	**1.54**	**6.74**	**1.54**	**6.74**	**1.54**	**6.74**	**0.114**	**2.12**

"*" Denotes an hourly emission rate is not appropriate

"-" Indicates emissions of this pollutant are not expected

[1] Flare malfunction hourly emission rates reflect worst case emissions modeled for this unit. These emissions are the maximum allowed for the flare and are not additive with the Process and SSM emissions requested under Unit Flare.

Controlled HAP and Greenhouse Gas Emissions																	
Equipment	**Total HAPs**		**Formaldehyde**		**Acetaldehyde**		**n-Hexane**		**Benzene**		**Toluene**		**Xylenes**		**Ethylbenzene**		**CO2e**
	lb/hr	**tpy**	**lb/hr**	**tpy**	**lb/hr**	**tpy**	**lb/hr**	**tpy**	**lb/hr**	**tpy**	**lb/hr**	**tpy**	**lb/hr**	**tpy**	**lb/hr**	**tpy**	**tpy**
1	0.33	1.45	0.13	0.59	0.14	0.60	0.012	0.052	0.0043	0.019	0.0033	0.014	0.010	0.043	-	-	21,707.51
2	0.33	1.45	0.13	0.59	0.14	0.60	0.012	0.052	0.0043	0.019	0.0033	0.014	0.010	0.043	-	-	21,707.51
5	0.038	0.17	0.029	0.13	0.0016	0.0070	-	-	4.82E-04	0.0021	0.0052	0.023	0.0026	0.011	-	-	20,618.14
3a	-	-	-	-	-	-	-	-	-	-	-	-	-	-	-	-	-
3b	0.22	0.97	0.0016	0.0069	0.0014	0.0060	0.023	0.10	0.11	0.46	0.07	0.29	0.01	0.04	0.004	0.02	1,549.99
T-008																	
T-009	*	0.79	-	-	-	-	*	0.67	*	0.086	*	0.031	*	0.0027	*	0.0014	-
T-011																	
T-012																	
F-001	*	3.57	-	-	-	-	-	-	-	-	-	-	-	-	-	-	-
LOAD	*	0.45	-	-	-	-	*	0.39	*	0.043	*	0.001	*	0.0012	*	0.0013	-
Flare (Process)	0.79	0.28	-	-	-	-	0.56	0.20	0.075	0.027	0.087	0.031	0.058	0.021	0.0075	0.0027	5,366.81
Flare (SSM)	0.01	0.000	-	-	-	-	0.01	0.000	-	-	-	-	-	-	-	-	6,971.17
VENT (SSM)	*	0.69	-	-	-	-	*	0.49	*	0.11	*	0.075	*	0.010	-	0.0052	1,754.57
MALF	-	-	-	-	-	-	-	-	-	-	-	-	-	-	-	-	-
Total	**1.72**	**9.81**	**0.30**	**1.31**	**0.28**	**1.22**	**0.61**	**1.96**	**0.19**	**0.76**	**0.17**	**0.48**	**0.09**	**0.17**	**0.011**	**0.028**	**79,675.70**

Unit: 1, 2
Description: Solar Centaur T-4702 NG turbines

Fuel consumption	35.3	Mscf/hr	As permitted
Fuel heat value	1200	Btu/scf	Nominal LHV of fuel gas
Heat rate	42.3	MMbtu/hr	Fuel consumption * fuel heat value / 1000
Annual fuel usage	309.0	MMscf/yr	8760 hrs/yr operation

Uncontrolled Emissions

NO_x	CO	VOC	SO_2 [1]	PM [2]	H_2S [1]		
				0.015		lb/MMBtu	Solar Turbines Inc Product Information Letter 171 Particulates Emission Rate
15.8	1.5					lbs/hr	Unit 1: 2010 Stack Test Report Maximum Recordable Rate
-	-					lbs/hr	Unit 2: 2010 Stack Test Report Maximum Recordable Rate
15.2	0.8					lbs/hr	Unit 1: 2011 Stack Test Report Maximum Recordable Rate
15.4	1.0					lbs/hr	Unit 2: 2011 Stack Test Report Maximum Recordable Rate
16.4	1.2					lbs/hr	Unit 1: 2012 Stack Test Report Maximum Recordable Rate
15.2	1.0					lbs/hr	Unit 2: 2012 Stack Test Report Maximum Recordable Rate
17.57	2.14					lbs/hr	Unit 1: 2014 Stack Test Report Maximum Recordable Rate
18.85	1.87					lbs/hr	Unit 2: 2014 Stack Test Report Maximum Recordable Rate
15.63	1.87					lbs/hr	Unit 1: 2015 Stack Test Report Maximum Recordable Rate
16.62	1.27					lbs/hr	Unit 2: 2015 Stack Test Report Maximum Recordable Rate
7.85	0.90					lbs/hr	Unit 1: 2016 Stack Test Report Maximum Recordable Rate
9.75	1.21					lbs/hr	Unit 2: 2016 Stack Test Report Maximum Recordable Rate
18.9	2.1					lbs/hr	Maximum Recordable Rate
10%	20%						Safety Factor
20.7	**2.6**					lbs/hr	Emission Rate with Safety Factor
27.0	7.4	0.77				lb/hr	As permitted
27.0	**7.4**	**0.77**	**0.50**	**0.63**	**2.5E-04**	lb/hr	Hourly emission rate
90.8	**11.2**	**3.4**	**2.2**	**2.8**	**1.1E-03**	tpy	Annual emission rate (8760 hrs/yr)

Total HAP [3]	n-Hexane [3]	HCHO [3]	Acetaldehyde [3]	Benzene [3]	Toluene [3]	Xylenes [3]		
0.33	**0.012**	**0.13**	**0.14**	**0.0043**	**0.0033**	**0.0099**	lb/hr	Hourly emission rate
1.4	**0.052**	**0.59**	**0.60**	**0.019**	**0.014**	**0.043**	tpy	Annual emission rate (8760 hrs/yr)

[1] SO_2 emissions based on fuel sulfur content of 5 gr S/100 scf, or 0.00714 lb S/Mscf

lb/hr SO_2 = 5gr S/100scf * Fuel consumption (Mscf/hr) * 1lb/7000gr * 1000scf/Mscf * 64 lb SO_2/32 lb S

H_2S emissions based on 0.25 g/100 scf H_2S in fuel

lb/hr H_2S = 0.25 gr H_2S/100 scf * Fuel consumption (Mscf/hr) * 1000scf/Mscf * 1 lb/7000 gr * (1 - Comb. Eff [98%])

[2] Assumed TSP = PM_{10} = $PM_{2.5}$

[3] HAP emissions calculated from GRI-HAPCalc v3.01.

GHG Calculations

CO_2 [4]	N_2O [4]	CH_4 [4]	CO_2e [4]		
53.06	0.0001	0.001		kg/MMBtu	40 CFR 98 Subpart C Tables C-1 and C-2
1	298	25		GWP	40 CFR 98 Table A-1
21685.1	0.041	0.41		tpy	
21685.1	**12.2**	**10.2**	**21707.5**	tpy CO_2e	

[4] N_2O, CH_4, and CO_2 tpy Emission Rate= EF* Fuel Usage * Fuel Heat Value * 2.20462 lb/1 kg * 1 ton/2000 lb

CO_2e tpy Emission Rate = CO_2 Emission Rate + N_2O Emission Rate*GWP Factor +CH_4 Emission Rate*GWP Factor

Unit: 5
Description: Solar Centaur 40-4700 NG turbines

Fuel consumption	33.5	Mscf/hr	
Fuel heat value	1200	Btu/scf	Nominal LHV of fuel gas
Heat rate	40.2	MMBtu/hr	Fuel consumption * fuel heat value / 1000
Annual fuel usage	293.5	MMscf/yr	8760 hrs/yr operation

Uncontrolled Emissions

NO_x	CO	VOC	SO_2 [1]	PM^2	H_2S[1]		
				0.0066	-	lb/MMBtu	AP-42 Table 3.1-2a
0.100	0.122	0.035			-	lb/MMBtu	Hourly Emission Factors
0.100	0.122	0.035			-	lb/MMBtu	Annual emission rate (8760 hrs/yr)
4.03	4.90	1.40	0.48	0.27		lb/hr	
17.64	21.48	6.15	2.10	1.16	-	tpy	
10%	20%						Safety Factor
4.43	**5.89**	**1.40**	**0.48**	**0.27**	**2.39E-04**	**lb/hr**	Emission Rate with Safety Factor
19.40	**25.78**	**6.15**	**2.10**	**1.16**	**1.05E-03**	**tpy**	

Total HAP[3]	HCHO[3]	Acetaldehyde[3]	Benzene[3]	Toluene[3]	Xylenes[3]		
	7.10E-04	**4.00E-05**	**1.20E-05**	**1.30E-04**	**6.40E-05**	lb/MMBtu	AP-42 Table 3.1-3
0.038	**0.029**	**0.002**	**4.82E-04**	**0.0052**	**0.0026**	lb/hr	Hourly emission rate
0.17	**0.13**	**0.0070**	**0.0021**	**0.023**	**0.011**	tpy	Annual emission rate (8760 hrs/yr)

[1] SO_2 emissions based on fuel sulfur content of 5 gr S/100 scf, or 0.00714 lb S/Mscf

lb/hr SO_2 = 5gr S/100scf * Fuel consumption (Mscf/hr) * 1lb/7000gr * 1000scf/Mscf * 64 lb SO_2/32 lb S

H_2S emissions based on 0.25 g/100 scf H_2S in fuel

lb/hr H_2S = 0.25 gr H_2S/100 scf * Fuel consumption (Mscf/hr) * 1000scf/Mscf * 1 lb/7000 gr * (1 - Comb. Eff [98%])

[2] Assumed TSP = PM_{10} = $PM_{2.5}$

[3] HAP emissions calculated using emission factors from AP-42 Table 3.1-3.

GHG Calculations

CO_2[4]	N_2O[4]	CH_4[4]	CO_2e[4]		
53.06	0.0001	0.001		kg/MMBtu	40 CFR 98 Subpart C Tables C-1 and C-2
1	298	25		GWP	40 CFR 98 Table A-1
20596.9	0.039	0.39		tpy	
20596.866	**11.6**	**9.7**	**20618.1**	tpy CO_2e	

[4] N_2O, CH_4, and CO_2 tpy Emission Rate= EF* Fuel Usage * Fuel Heat Value * 2.20462 lb/1 kg * 1 ton/2000 lb

CO_2e tpy Emission Rate = CO_2 Emission Rate + N_2O Emission Rate*GWP Factor +CH_4 Emission Rate*GWP Factor

Unit: 3a and 3b
Description: Gas Tech dehydrator with condenser & BTEX buster
3a Glycol Dehydrator(Still Vent and FlashTank)
3b 3 MMBtu/hr Glycol Dehydrator Reboiler

Control Equipment: BTEX Buster to control dehydrator regenerator (3b) and flash tank (3c) emissions
Manufacturer: Gas Tech

Uncontrolled Emissions - Glycol Dehydrator Venting to Atmosphere

Reboiler Fuel Usage

Fuel Consumption	3.0	MMBtu/hr	Input heat rate
Throughput	200	MMscf/d	Throughput
Fuel heat value	1200	Btu/scf	Nominal LHV of fuel gas
Hourly fuel usage	2.50	Mscf/hr	Fuel usage
Annual fuel usage	21.90	MMscf/yr	Annual usage
Operating hours	8760.00	hr/yr	

	NO_x	CO	VOC	SO_2[1]	H_2S[1]	TSP		
Reboiler-unit 3b	100	84	5.5			7.6	lb/MMscf	Unit emission rates from AP-42 Table 1.4-1 & 2 (Assuming average NG heating value of 1,020 Btu/scf)
	117.6	98.8	6.5			8.9	lb/MMscf	Adjusted emission factor: EFF X (Fuel Heat Value/1,020 Btu/scf)
	0.29	0.25	0.016			0.022	lb/hr	lb/MMscf * (Mscf/hr / 1000 Mscf/1 MMscf)
Regenerator-unit 3a			56.35				lb/hr	GRI-GLYCalc (uncontrolled regenerator emissions)
Flash tank-unit 3a			17.30				lb/hr	GRI-GLYCalc (flash tank off gas)
Total	**0.29**	**0.25**	**73.7**	**0.036**	**0.00089**	**0.022**	**lb/hr**	
	1.29	**1.08**	**322.6**	**0.156**	**0.0039**	**0.098**	**tpy**	

	n-Hexane	Benzene	Toluene	Ethylbenzene	Xylenes	HCOH	Acetaldehyde	Total HAPs		
	0.0092	0.0049	0.0067	0.0139	0.0087	0.0055	0.0048	0.0946	tpy	GRI-HAPCalc (Reboiler-3b)
	1.14	7.30	8.14	-	2.53	-	-	19.1	lb/hr	GRI-GLYCalc (Regenerator - 3a)
	0.21	0.038	0.027	-	0.0030	-	-	0.28	lb/hr	GRI-GLYCalc (Flash tank-3a "off gas")
	1.4	**7.3**	**8.2**	**-**	**2.5**	**0.0013**	**0.0011**	**19.4**	**lb/hr**	
	5.9	**32.1**	**35.8**	**-**	**11.1**	**0.0055**	**0.0048**	**85.0**	**tpy**	

Controlled Emissions - Glycol Dehydrator with Condenser (on Regenerator) & BTEX Buster

Flow to BTEX Buster	362	scf/hr	GRI-GLYCalc - condenser vent gas stream
	-	scf/hr	GRI-GLYCalc - flash tank off gas stream (Sent to Fuel Int)
	0.36	Mscf/hr	Total fuel routed to BTEX Buster (condenser vent gas + flash tank off gas)

	NO_x	CO	VOC	SO_2[1]	H_2S[1]	TSP		
Reboiler-unit 3b (2)	100	84	5.5			7.6	lb/MMscf	Unit emission rates from AP-42 Table 1.4-1 & 2 (Assuming average NG heating value of 1,020 Btu/scf)
	117.6	98.8	6.5			8.9	lb/MMscf	Adjusted emission factor: EFF X (Fuel Heat Value/1,020 Btu/scf)
	0.036	0.030	0.0020			0.003	lb/hr	lb/MMscf * (Mscf/hr / 1000 Mscf/1 MMscf)
Regenerator-unit 3a			34.59				lb/hr	GRI-GLYCalc (controlled regenerator emissions)
			0.69				lb/hr	Emission rate assuming 98% combustion control
Flash tank-unit 3a			17.30				lb/hr	GRI-GLYCalc (flash tank off gas)
			-				lb/hr	100% is routed to fuel line
Total	0.04	0.03	0.69	0.0052	1.29E-04	0.0028	lb/hr	lb/hr of (3a + 3b)
	0.16	0.13	3.04	0.023	5.66E-04	0.012	tpy	lb/hr * 8760 hrs/yr / 2000 lb/ton
	25%	25%	25%	25%	25%	25%	Safety Factor	
	0.045	**0.038**	**0.87**	**0.0065**	**1.62E-04**	**0.0034**	**lb/hr**	Emission rate with 25% safety factor
	0.20	**0.17**	**3.80**	**0.028**	**7.08E-04**	**0.015**	**tpy**	lb/hr * 8760 hrs/yr / 2000 lb/ton

[1] SO_2 emissions based on fuel sulfur content of 5 gr S/100 scf, or 0.00714 lb S/Mscf
0.00714 lb S/Mscf * fuel consumption (Mscf/hr) * 64 lb SO_2/32 lb S = lb/hr SO_2
H_2S emissions based on 0.25 g/100 scf H_2S in fuel
0.25 gr H_2S/100 scf * fuel scf/hr * 1 lb/7000 gr = lb/hr H_2S

[2] Flow to the BTEX Buster is either burned as fuel or ignited by a glow plug if the reboiler firebox is not burning.

	n-Hexane	Benzene	Toluene	Ethylbenzene	Xylenes	HCOH	Acetaldehyde	Total HAPs		
	0.0092	0.0049	0.0067	0.0139	0.0087	0.0055	0.0048	0.0946	tpy	GRI-HAPCalc (Reboiler-3b)
	0.80	4.155	2.587	-	0.278	-	-	7.82	lb/hr	GRI-GLYCalc (controlled regenerator emissions)
	0.0159	0.0831	0.0517	-	0.0056	-	-	0.1564	lb/hr	Emission rate assuming 98% combustion
	0.2122	0.0380	0.0270	-	0.0030	-	-	0.2802	lb/hr	GRI-GLYCalc (flash tank off gas)
	-	-	-	-	-	-	-	-	lb/hr	100% is Routed to fuel line
	0.018	0.08	0.05	0.0032	0.008	0.0013	0.0011	0.18	lb/hr	Controlled hourly emission rate
	0.08	0.37	0.23	0.014	0.03	0.0055	0.0048	0.78	tpy	lb/hr * 8760 hrs/yr / 2000 lb/ton
	25%	25%	25%	25%	25%	25%	25%	25%		Safety Factor
	0.023	**0.11**	**0.067**	**0.0040**	**0.0094**	**0.0016**	**0.0014**	**0.22**	**lb/hr**	Emission rate with 25% safety factor
	0.099	**0.46**	**0.29**	**0.017**	**0.041**	**0.0069**	**0.0060**	**0.97**	**tpy**	lb/hr * 8760 hrs/yr / 2000 lb/ton

GHG Calculations

CO_2[3]	N_2O[3]	CH_4[3]	CO_2e[3]		
53.06	0.0001	0.001		kg/MMBtu	40 CFR 98 Subpart C Tables C-1 and C-2
1	298	25		GWP	40 CFR 98 Table A-1
1537.1	*0.0029*	*0.029*		tpy	
		22.668		tpy	GRI-GLYCalc (controlled regenerator emissions)
		-			GRI-GLYCalc (flash tank off gas, Routed to Fuel)
		22.668			GRI-GLYCalc (controlled regenerator emissions)
-	-	*0.45*		tpy	Controlled regenerator emissions+flash tank off gas with 98% Combustion Control
1537.1	**0.86**	**12.06**	**1550.0**	tpy CO_2e	

[3] N_2O, CH_4, and CO_2 tpy Emission Rate= EF* Fuel Usage * Fuel Heat Value * 2.20462 lb/1 kg * 1 ton/2000 lb
CO_2e tpy Emission Rate = CO_2 Emission Rate + N_2O Emission Rate*GWP Factor +CH_4 Emission Rate*GWP Factor

Slop Water Tank Emissions

Unit: T-006
Description: Slop Water Tank from 3-Phase Separator and Dehy

Tank Throughput

33	bbl/day	bbl/yr / 365 day/yr
12,000	bbl/yr	Maximum Throughput
504,000	gal/yr	bbl/yr * 42 gal/bbl

Promax Emissions Report
Annual Emissions

Components	Working Losses (ton/yr)	Breathing Losses (ton/yr)	Total Losses (ton/yr)[1]
Hydrogen Sulfide	3.28692E-05	1.89576E-05	5.18268E-05
Nitrogen	1.10618E-05	6.38002E-06	1.74418E-05
Carbon Dioxide	0.002045151	0.001179563	0.003224714
Methane	0.000521325	0.00030068	0.000822004
Ethane	0.00410824	0.002369471	0.006477712
Propane	0.009757611	0.005627806	0.015385417
i-Butane	0.001901042	0.001096446	0.002997489
n-Butane	0.00583467	0.003365208	0.009199879
2,2-Dimethylpropane	0	0	0
i-Pentane	0.001544366	0.00089073	0.002435096
n-Pentane	0.001627716	0.000938803	0.002566519
2,2-Dimethylbutane	0	0	0
Cyclopentane	0	0	0
2,3-Dimethylbutane	0	0	0
2-Methylpentane	0	0	0
3-Methylpentane	0	0	0
n-Hexane	0.000416481	0.00024021	0.00065669
Methylcyclopentane	0	0	0
Benzene	0.002117181	0.001221107	0.003338287
Cyclohexane	0.000822733	0.00047452	0.001297252
2-Methylhexane	0	0	0
3-Methylhexane	0	0	0
2,2,4-Trimethylpentane	0	0	0
n-Heptane	0.000369694	0.000213225	0.000582919
Methylcyclohexane	0.000511008	0.000294729	0.000805737
Toluene	0.00118465	0.00068326	0.00186791
n-Octane	0.000519775	0.000299786	0.000819561
Ethylbenzene	6.81112E-08	3.92839E-08	1.07395E-07
m-Xylene	0.000140878	8.12527E-05	0.00022213
p-Xylene	0	0	0
o-Xylene	0	0	0
n-Nonane	0	0	0
n-Decane	0	0	0
n-Undecane	0	0	0
Saftey Factor	**100%**	**100%**	**100%**
Total VOC	**0.0535**	**0.0309**	**0.0843**
Total HAP	**7.72E-03**	**4.45E-03**	**1.22E-02**

[1] Emissions are assumed to be 1% condensate.

Condensate Tank Emissions

Unit: T-008. 009, T-011, T-012
Description: Stabilized condensate tanks
# of tanks 4
Tank Throughput*
190 bbl/day

Tanks 4.09d Emissions Report
Annual Emissions

	Uncontrolled Emissions per Tank			Uncontrolled Tank Battery
Components	Working Losses (ton/yr)	Breathing Losses (ton/yr)	Total Losses (ton/yr)	Total Losses (ton/yr)
Hydrogen Sulfide	0.00E+00	0.00E+00	0.00E+00	0.00E+00
Nitrogen	0.00E+00	0.00E+00	0.00E+00	0.00E+00
Carbon Dioxide	1.16E-11	1.10E-11	2.26E-11	9.04E-11
Methane	1.05E-13	1.00E-13	2.05E-13	8.19E-13
Ethane	7.64E-08	7.28E-08	1.49E-07	5.97E-07
Propane	4.13E-04	3.93E-04	8.06E-04	3.22E-03
i-Butane	2.98E-02	2.84E-02	5.83E-02	2.33E-01
n-Butane	7.27E-01	6.93E-01	1.42E+00	5.68E+00
2,2-Dimethylpropane	1.45E-02	1.39E-02	2.84E-02	1.14E-01
i-Pentane	6.38E-01	6.08E-01	1.25E+00	4.99E+00
n-Pentane	5.78E-01	5.51E-01	1.13E+00	4.51E+00
2,2-Dimethylbutane	5.63E-03	5.37E-03	1.10E-02	4.40E-02
Cyclopentane	0.00E+00	0.00E+00	0.00E+00	0.00E+00
2,3-Dimethylbutane	3.99E-02	3.80E-02	7.80E-02	3.12E-01
2-Methylpentane	9.24E-02	8.80E-02	1.80E-01	7.22E-01
3-Methylpentane	4.87E-02	4.65E-02	9.52E-02	3.81E-01
n-Hexane	8.57E-02	8.17E-02	1.67E-01	6.70E-01
Methylcyclopentane	3.96E-02	3.77E-02	7.73E-02	3.09E-01
Benzene	1.10E-02	1.05E-02	2.15E-02	8.58E-02
Cyclohexane	2.72E-02	2.59E-02	5.32E-02	2.13E-01
2-Methylhexane	7.08E-03	6.75E-03	1.38E-02	5.53E-02
3-Methylhexane	7.97E-03	7.59E-03	1.56E-02	6.22E-02
2,2,4-Trimethylpentane	0.00E+00	0.00E+00	0.00E+00	0.00E+00
n-Heptane	3.02E-02	2.88E-02	5.89E-02	2.36E-01
Methylcyclohexane	1.65E-02	1.58E-02	3.23E-02	1.29E-01
Toluene	3.94E-03	3.76E-03	7.70E-03	3.08E-02
n-Octane	7.97E-03	7.60E-03	1.56E-02	6.23E-02
Ethylbenzene	1.84E-04	1.76E-04	3.60E-04	1.44E-03
m-Xylene	1.71E-04	1.63E-04	3.33E-04	1.33E-03
p-Xylene	1.78E-04	1.70E-04	3.48E-04	1.39E-03
o-Xylene	0.00E+00	0.00E+00	0.00E+00	0.00E+00
n-Nonane	7.42E-04	7.07E-04	1.45E-03	5.80E-03
n-Decane	0.00E+00	0.00E+00	0.00E+00	0.00E+00
n-Undecane	0.00E+00	0.00E+00	0.00E+00	0.00E+00
TOTAL VOC	**2.41**	**2.30**	**4.71**	**18.85**
TOTAL HAPs	**0.101**	**0.096**	**0.20**	**0.79**

* Facility throughout will be 190 bbl/day. Each tank has the potential to route entire facility throughput through a give tank however actual throughput will likely be much lower.

Venting VOC Emissions

Unit: VENT
Description: Emission rates from venting during startup, shutdown, and blowdown operation

Volume Vented Calculations

	Venting Unit	Volume (Mscf)	Events/yr	Gas Stream	Volume Vented (Mscf/yr)	
	1	9	120	Inlet	1080	
	2	9	120	Inlet	1080	
Totals			**240**		**2160**	
Total (hrs)			240			Assumes 1 hour per event

Source: Promax RVP11 Simulation, SC Vapor Stream, from File: ProMax Report South Carlsbad_8

Component	MW	Wet vol/mol %	Dry vol/mol %	MW * dry vol %	Mass Fraction (dry)	Spec. Volume ft^3/lb	Spec. Volume VOC ft^3/lb
Water	18.02	0.015%				21.06	
Nitrogen	28.01	2.72%	2.72%	0.762	3.54%	13.547	
CO_2	44.01	1.61%	1.61%	0.706	3.28%	8.623	
H_2S*	34.08	0.05%	0.05%	1.70%	0.08%	11.136	
Methane	16.04	76.6%	76.58%	12.286	57.09%	23.65	
Ethane	30.07	10.1%	10.12%	3.044	14.14%	12.62	
Propane	44.10	5.4%	5.38%	2.375	11.03%	8.606	4.342
i-Butane	58.12	0.67%	0.67%	0.387	1.80%	6.529	0.537
n-Butane	58.12	1.6%	1.56%	0.908	4.22%	6.529	1.260
2,2 Dimethylpropane	72.15	0.010%	0.01%	0.007	0.03%	5.302	0.008
i-Pentane	72.15	0.37%	0.37%	0.264	1.23%	5.26	0.295
n-Pentane	72.15	0.38%	0.38%	0.276	1.28%	5.26	0.308
2,2 Dimethylbutane	86.18	0.0040%	0.00%	0.003	0.02%	5.26	0.004
Cyclopentane	70.14	0.00%	0.00%	0.000	0.00%	5.411	0.000
2,3 Dimethylbutane	86.18	0.035%	0.03%	0.030	0.14%	4.404	0.028
2 Methylpentane	86.18	0.087%	0.09%	0.075	0.35%	4.404	0.070
3 Methylpentane	86.18	0.049%	0.05%	0.043	0.20%	4.404	0.040
n-Hexane	86.18	0.10%	0.10%	0.087	0.40%	4.404	0.081
Methylcyclopentane	84.16	0.053%	0.05%	0.045	0.21%	4.509	0.043
Cyclohexane	84.16	0.048%	0.05%	0.040	0.19%	3.787	0.033
2-Methylhexane	100.20	0.013%	0.01%	0.013	0.06%	3.787	0.010
3-Methylhexane	100.20	0.014%	0.01%	0.015	0.07%	3.787	0.012
n-Heptanes	100.20	0.066%	0.07%	0.066	0.31%	3.787	0.053
Other Heptanes	100.20	0.00%	0.00%	0.000	0.00%	3.787	0.000
Methylcyclohexane	98.19	0.036%	0.04%	0.036	0.17%	3.865	0.029
2,2,4-Trimethylpentane	114.23	0.00%	0.00%	0.000	0.00%	3.322	0.000
Benzene	78.11	0.024%	0.02%	0.018	0.09%	4.858	0.019
Toluene	92.14	0.014%	0.01%	0.013	0.06%	4.119	0.011
Ethylbenzene	106.17	0.00087%	0.00%	0.001	0.00%	3.574	0.001
Xylenes	106.17	0.0017%	0.00%	0.002	0.01%	3.574	0.001
C8+ heavies	114.23	0.0037%	0.00%	0.004	0.02%	3.322	0.003
Total		100.0%	100.0%	21.52	100%		7.188
Dry total		100.0%	*(mixture mol. wt)*				
NMEHC (VOC)		8.92%					21.87%
Mixture heating value		1241	BTU/scf				

*Note: * Although the RVP 11 gas simulation did not account and H_2S it was determined that a 0.05% wet/mol % will be used to overcome gas composition fluctuations.*

Venting VOC Emissions

Unit: VENT
Description: Emission rates from venting during startup, shutdown, and blowdown operation

Emission Calculations

Inlet Gas 1.0 Mcf/hr Engineering estimate

VOC	H_2S		
8.92%	0.0500%	mol%	VOC content from gas analysis; H2S content based on maximum possible estimated inlet concentration
7.2	11.136	ft^3/lb	Specific volume from gas analysis, calculated above
12.4	0.04490	lb/hr	vol. gas * mole fraction / specific volume
12.4	0.04490	lb/Mcf	lb/hr / Mcf/hr

Total Blowdown Emissions
These calculations estimate the total emission rate per blowdown event, based on duration and volume of gas

Vent

2160	Mcf/yr total vented
100%	Safety Factor
4320	with SF
9	Max Mcf/event
100%	Safety Factor
18	with SF

	VOC	H_2S		
Inlet Gas	12.4	0.04490	lb/Mcf vented	
	223.4	0.808	lb/Max event	Max Mcf/event * lb/Mcf
	223.4	0.808	lb/hr	lb/Max event / 1 hr/eve Hourly emission rate shown for informational purposes only
	26.8	**0.10**	tpy vented	(Mcf/yr * lb/Mcf) / 2000 lb/ton

HAP	VOC content	Specific Volume	lb/Mcf[1]	tpy[2]
n-Hexane	0.1004%	4.404	0.2280	0.49
2,2,4-TMP	0.0000%	3.322	0.0000	0.00
Benzene	0.0236%	4.858	0.0486	0.11
Toluene	0.0142%	4.119	0.0345	0.075
Ethylbenzene	0.0009%	3.574	0.0024	0.0052
Xylenes	0.0017%	3.574	0.0048	0.010
Total HAPs				**0.69**

[1] (Vol. gas * mole fraction / specific volume) / Mcf/hr
[2] (Mcf/yr * lb/Mcf) / 2000 lb/ton

GHG Calculations

CO_2	CH_4	CO_2e		
4.0	70.0		tpy	Mscf/yr * 1000scf/yr * density * 1.1023tons/MT * 1MT/1000kg*Safety Factor
1	25		GWP	40 CFR 98 Table A-1
4.0	**1,750.5**	**1,754.6**	tpy CO_2e	

Flare Alternative Operating Scenario

Unit: Flare (Process)
Description: Combustion of vapors from condensate stabilizer - alternative operating scenario

Pilot Emissions

MW of fuel gas	16.04	lb/lb-mol	Estimated, nominal for natural gas
Pilot fuel flow	100	scf/hr	Engineering estimate
Fuel heating value	1200	Btu/scf	Estimated, nominal for LHV natural gas
Heat rate	0.12	MMBtu/hr	Btu/scf * scf/hr / 1,000,000
Annual fuel usage	0.88	MMscf/yr	scf/hr * 8760 hrs/yr / 1,000,000

Pilot Emission Calculations

NOx	CO	VOC[1]	H_2S[2]	SO_2[3]	HAPs[1]		
0.0680	0.3100					lb/MMBtu	AP-42 Table 13.5-1 (9/1991)
103%						%	Safety Factor[4]
			3.57E-05			lb H_2S/hr	Sweet natural gas fuel, 0.25 gr H_2S/100scf
				0.0014		lb SO_2/hr	Sweet natural gas fuel, 5 gr S/100scf
			7.1E-07	6.6E-05		lb/hr	98% combustion H_2S; 100% H_2S -> SO_2
0.0166	**0.037**	**-**	**7.1E-07**	**0.0015**	**-**	lb/hr	
0.0181	**0.041**	**-**	**7.8E-07**	**0.0016**	**-**	tpy	lb/hr * (2190 hr/yr operation)/ 2000 lb/ton
0.073	0.163	-	3.1E-06	0.0065	-	tpy	lb/hr * (8760 hr/yr operation)/ 2000 lb/ton

[1] Fuel is purchased natural gas, comprised mainly of methane. VOC and HAP emissions from pilot only are assumed to be negligible.
[2] H_2S emissions based on 0.25 g/100 scf H_2S in fuel, 98% combustion.
0.25 gr H_2S/100 scf * fuel scf/hr * 1 lb/7000 gr = lb/hr H_2S (prior to combustion and conversion to SO_2)
[3] SO_2 emissions based on sulfur content of 5 g/100 scf S in fuel and 100% combustion of H_2S to SO_2.
5 gr S/100 scf * fuel scf/hr * 1 lb/7000 gr * 64 lb SO_2/32 lb S = lb/hr SO_2
[4] TCEQ EF factors were removed from calculation; SF used to maintain emissions as currently permitted.

Source: Armstron Gas Lab Analysis No. 211306

Component	MW	vol/mol % Gas Analysis	Dry vol/mol%	MW * dry vol %	Spec. Volume (scf/lb)	Flow (scf/hr)	Loading (lb/hr)	Annual Flow (scf/yr)	Annual Loading (lb/yr)
Water	18.02	0.000%							
Nitrogen	28.01	0.412%	0.414%	0.116	13.547	259	19.102	186,314.1	13,753.2
CO2	44.01	1.020%	1.025%	0.451	8.623	641	74.298	461,284.7	53,494.7
H2S	34.08	0.050%	0.050%	0.017	11.136	31	2.821	22,616.4	2,030.9
Methane	16.04	45.293%	45.527%	7.304	23.65	28455	1203.152	20,487,273.4	866,269.5
Ethane	30.07	15.926%	16.008%	4.814	12.62	10005	792.795	7,203,649.3	570,812.2
Propane	44.10	22.771%	22.889%	10.093	8.606	14305	1662.258	10,299,883.7	1,196,825.9
i-Butane	58.12	4.100%	4.121%	2.395	6.529	2576	394.501	1,854,502.0	284,040.7
n-Butane	58.12	7.034%	7.071%	4.110	6.529	4419	676.846	3,181,769.7	487,328.8
i-Pentane	72.15	1.333%	1.340%	0.967	5.26	838	159.256	603,134.9	114,664.4
n-Pentane	72.15	1.120%	1.126%	0.812	5.26	703	133.745	506,517.5	96,296.1
Cyclopentane	70.14	0.000%	0.000%	0.000	5.411	0	0.000	0.0	0.0
n-Hexane	86.18	0.196%	0.197%	0.170	4.404	123	**28.006**	88,804.9	**20,164.6**
Cyclohexane	84.16	0.000%	0.000%	0.000	4.509	0	0.000	0.0	0.0
Other Hexanes	84.16	0.000%	0.000%	0.000	4.509	0	0.000	0.0	0.0
Heptanes	100.20	0.059%	0.059%	0.059	3.787	37	9.794	26,705.8	7,052.0
Methylcyclohexane	98.19	0.000%	0.000%	0.000	3.865	0	0.000	0.0	0.0
2,2,4-Trimethylpentane	114.23	0.000%	0.000%	0.000	3.322	0	**0.000**	0.0	**0.0**
Benzene	78.11	0.029%	0.029%	0.023	4.858	18	**3.772**	13,192.0	**2,715.5**
Toluene	92.14	0.028%	0.029%	0.026	4.119	18	**4.340**	12,870.3	**3,124.6**
Ethylbenzene	106.17	0.002%	0.002%	0.002	3.574	1	**0.375**	965.3	**270.1**
Xylenes	106.17	0.016%	0.016%	0.017	3.574	10	**2.876**	7,400.4	**2,070.6**
C8+ heavies	114.23	0.095%	0.096%	0.109	3.322	60	18.026	43,115.4	12,978.8
Total		99.5%	100.0%	20.83		62500	5186.0	45,000,000.0	2,227,532.2
Dry total		99.5%							

*Note: * Although the RVP 11 gas simulation did not account and H_2S it was determined that a 0.05% wet/mol % will be used to overcome gas composition fluctuations.*

Uncontrolled VOC Emissions	**36.98%**	**3,093.8**	**lb/hr**	**2,227,532.2**	**lb/yr**
Uncontrolled HAP Emissions		**39.4**	**lb/hr**	**28,345.4**	**lb/yr**

Gas to Flare	62,500	scf/hr	maximum expected flow of 1.5MMscf/day; assumed 24 hour operation
	45,000,000	scf/yr	maximum expected annual flow
	1,828.35	Btu/scf	
	114.27	MMbtu/hr	
	82,275.84	Mmbtu/yr	
	20.83	MW	
Pilot Gas to Flare	100.00	scf/hr	
	16.04	MW	
Totals all streams	62,600.00	scf/hr	
	20.82	MW	volume-weighted average

	NOx	CO	VOC	H_2S	SO_2	n-Hexane	Benzene	Toluene	Ethylbenzene	Xylenes	HAPs		
	0.0680	0.3100										lb/MMBtu	AP-42 Table 13.5-1
		77%										%	Safety Factor
					0.10							lb/hr	98% combustion H_2S; 100% H_2S -> SO_2
Gas to Flare Stack	**7.8**	**62.8**										**lb/hr**	lb/MMBtu * MMBtu/hr
			61.9	**0.056**	**0.10**	**0.56**	**0.075**	**0.087**	**0.008**	**0.058**	**0.79**	**lb/hr**	98% destruction of calculated content
Gas to Flare Stack - annual emissions	**2.8**	**22.6**		**-**	**-**							**tpy**	lb/MMBtu * MMBtu/yr/2000
			22.3	**0.020**	**0.46**	**0.20**	**0.027**	**0.031**	**0.003**	**0.021**	**0.28**	**tpy**	98% destruction of calculated content

[1] TCEQ EF factors were removed from calculation; SF used to maintain emissions as currently permitted.

Flare Emission Totals (Pilot + Inlet Gases)

NOx	CO	VOC	H_2S	SO_2	n-Hexane	Benzene	Toluene	Ethylbenzene	Xylenes	HAPs	
7.8	**62.8**	**61.9**	**5.6E-02**	**1.1E-01**	**0.56**	**0.075**	**0.087**	**0.0075**	**0.058**	**0.79**	**lb/hr**
2.8	**22.6**	**22.3**	**2.0E-02**	**4.6E-01**	**0.20**	**0.027**	**0.031**	**0.0027**	**0.021**	**0.28**	**tpy**

Stack Parameters

1000	°C	Exhaust temperature	Per NMAQB guidelines
20	m/sec	Exhaust velocity	Per NMAQB guidelines
65	ft	Flare height	Engineering design
Pilot only			
8,400	cal/sec	Heat release (q)	MMBtu/hr * 10^6 * 252 cal/Btu ÷ 3600 sec/hr
6,785		q_n	$q_n = q(1-0.048(MW)^{1/2})$
0.08	m	Effective stack diameter (D)	$D = (10^{-6}q_n)^{1/2}$
Pilot and Normal Operation			
114.4	MMBtu/hr	Total heat input	Sum of fuel and flare gas heating values
20.82	q/mol	Total mean MW	Volume weighted average of gas MWs
8,007,440	cal/sec	Heat release (q)	MMBtu/hr * 10^6 * 252 cal/Btu ÷ 3600 sec/hr
6,253,560		q_n	$q_n = q(1-0.048(MW)^{1/2})$
2.501	m	Effective stack diameter (D)	$D = (10^{-6}q_n)^{1/2}$

Flare GHG Emissions

§98.233(n) Flare stack GHG emissions.

flared Amine vent gas & Assist Gas

Step 1. Calculate contribution of un-combusted CH_4 emissions

$E_{a,CH4}$ (un-combusted) = V_a * (1- η)* X_{CH4} *(Equation W-39B)*

where:

$E_{a,CH4}$ = contribution of annual un-combusted CH_4 emissions from regenerator in cubic feet under actual conditions.

V_a = volume of gas sent to combustion unit during the year (cf)

η = Fraction of gas combusted by a burning flare (or regenerator), default value from Subpart W = 0.98

	Client Analysis	Pilot NG Composition
For gas sent to an unlit flare, η is zero.		
X_{CH4} = Mole fraction of CH_4 in gas to the flare =	0.452929	0.9500

Step 2. Calculate contribution of un-combusted CO_2 emissions

$E_{a,CO2}$ = V_a * X_{CO2} *(Equation W-20)*

where:

$E_{a,CO2}$ = contribution of annual un-combusted CO_2 emissions from regenerator in cubic feet under actual conditions.

	Client Analysis	Pilot NG Composition
V_a = volume of gas sent to combustion unit during the year (cf)		
X_{CO2} = Mole fraction of CO_2 in gas to the flare =	0.010198	0.005

Step 3. Calculate contribution of combusted CO_2 emissions

$E_{a,CO2}$ (combusted) = Σ (η * V_a * Y_j * R_j) *(Equation W-21)*

where:

η = Fraction of gas combusted by a burning flare (or regenerator) = 0.98

For gas sent to an unlit flare, η is zero.

V_a = volume of gas sent to combustion unit during the year (cf)

Y_j = mole fraction of gas hydrocarbon constituents j:	Client Analysis	Pilot NG Composition
Constituent j, Methane =	0.452929	0.9500
Constituent j, Ethane =	0.159257	0.0320
Constituent j, Propane =	0.227708	0.0020
Constituent j, Butane =	0.111341	0.00060
Constituent j, Pentanes Plus =	0.028800006	0.015

R_j = number of carbon atoms in the gas hydrocarbon constituent j:

Constituent j, Methane =	1
Constituent j, Ethane =	2
Constituent j, Propane =	3
Constituent j, Butane =	4
Constituent j, Pentanes Plus =	5

Step 4. Calculate GHG volumetric emissions at standard conditions (scf).

$$E_{s,n} = \frac{E_{a,n} * (459.67 + T_s)}{(459.67 + T_a)} * \frac{P_a}{P_s}$$ *(Equation W-33)*

where:

$E_{s,n}$ = GHG i volumetric emissions at standard temperature and pressure (STP) in cubic feet

$E_{a,n}$ = GHG i volumetric emissions at actual conditions (cf)

T_s = Temperature at standard conditions (F) =	60 F	(Based on Annual Avg Max Temperature for Hobbs, NM from Western
T_a = Temperature at actual conditions (F) =	76 F	Regional Climate Center)
P_s = Absolute pressure at standard conditions (psia) =	14.7 psia	
P_a = Absolute pressure at actual conditions (psia) =	14.7 psia	(Assumption)

Constant = 459.67 (temperature conversion from F to R)

Step 5. Calculate annual CH_4 and CO_2 mass emissions (ton).

$Mass_{s,i}$ = $E_{s,i}$ * ρ_i * 0.0011023 *(Equation W-36)*

where:

$Mass_{s,i}$ = GHG i (CO_2, CH_4, or N_2O) mass emissions at standard conditions in tons (tpy)

$E_{s,i}$ = GHG i (CO_2, CH_4, or N_2O) volumetric emissions at standard conditions (cf)

ρ_i = Density of GHG i. Use:

CH_4:	0.0192	kg/ft^3 (at 60F and 14.7 psia)
CO_2:	0.0526	kg/ft^3 (at 60F and 14.7 psia)

Step 6. Calculate annual N_2O emissions from portable or stationary fuel combustion sources under actual conditions (cf) using Equation W-40 .

$Mass_{N2O}$ = 0.0011023 * Fuel * HHV * EF *(Equation W-40)*

where:

$Mass_{N2O}$ = annual N_2O emissions from combustion of a particular type of fuel (tons).

Fuel = mass or volume of the fuel combusted

HHV = high heat value of the fuel

Pilot Gas =	1.200E-03 MMBtu/scf
Inlet Gas =	1.828E-03 MMBtu/scf
EF =	1.00E-04 kg N_2O/MMBtu

10^{-3} = conversion factor from kg to metric tons.

Step 7. Calculate total annual emission from flare by summing Equations W-40, W-19, W-20, and W-21.

Gas Sent to Flare	Gas Sent to Flare (cf/yr)	CH_4 Un-Combusted, $E_{a,CH4}$ (cf)	CO_2 Un-Combusted, $E_{a,CO2}$ (cf)	CO_2 Combusted, $E_{a,CO2}$ (cf)	CH_4 Un-Combusted, $E_{a,CH4}$ (scf)	CO_2 Un-Combusted, $E_{a,CO2}$ (scf)	CO_2 Combusted, $E_{a,CO2}$ (scf)	CH_4 Un-Combusted, $E_{a,CH4}$ (tpy)	CO_2 Un-Combusted, $E_{a,CO2}$ (tpy)	CO_2 Combusted, $E_{a,CO2}$ (tpy)	N_2O Mass Emissions (tpy)	CO2e (tpy)
Inlet Gas	45,000,000	407,636.1	458,910.0	90,137,358.4	395,239.0	444,953.6	87,396,087.5	8.4	25.8	5,067.3	0.0091	5,304.9
Pilot Gas	876,000	16,644.0	4,380.0	943,812.9	16,137.8	4,246.8	915,109.5	0.34	0.25	53.1	0.0001	61.9
							Total	**8.7**	**26.0**	**5,120.4**	**0.0092**	**5,366.8**

	CO_2	CH_4	N_2O
GWP	1	25	298

Flare SSM Emissions

Unit: Flare (SSM)
Description: Flare controlling blowdown and emergency emissions from the facility

Flaring Excess Gas When Plant is Down

Stream 11	26274.78	scf/hr	
	2163.24	Btu/scf	
	56.84	MMbtu/hr	
	37.87	lb/lbmol	
Totals all streams	26274.78	scf/hr	
	37.87	MW	volume-weighted average

	NOx	CO	VOC	H_2S	SO_2	HAPs	PM	Units	
	0.0680	0.3700						lb/MMBtu	AP-42 Table 13.5-1
	0.0641	0.5496						lb/MMBtu	TNRCC RG-109 High Btu ("Other")
				0.0000				% H2S	Max est. concentration from inlet
Stream 11	3.8650	31.2386	-	**-**	-	-	-	lb/hr	lb/MMBtu * MMBtu/hr
	-	-	38.0652	-	-	0.0040	-	lb/hr	98% destruction of calculated content
	-	-	-	-	-	-	-	lb/hr	Estimated 100% conversion of combusted H_2S to SO_2
	3.87	31.24	38.07	-	-	0.0040	-	lb/hr	Total; Flared gas (upset)
	100%	**100%**	**100%**	**-**	**-**	**100%**	**100%**	**%**	**Safety Factor**
	7.7	**62.5**	**76.1**	**-**	**-**	**0.0080**	-	**lb/hr**	
	0.201	**1.62**	**1.98**	**-**	**-**	**2.07E-04**	-	**tpy**	**Total; Upset Flared gas**
								Assume 52 events of 1 hr duration for upset conditions	

Stack Parameters

1000	°C	Exhaust temperature	Per NMAQB guidelines
20	m/sec	Exhaust velocity	Per NMAQB guidelines
65	ft	Flare height	Engineering design

Upset flare gas

56.8	MMBtu/hr	Total heat input	Sum of fuel and flare gas heating values
37.87	g/mol	Total mean MW	Volume weighted average of gas MWs
3,978,713	cal/sec	Heat release (q)	MMBtu/hr * 10^6 * 252 cal/Btu ÷ 3600 sec/hr
2,803,389		q_n	$q_n = q(1-0.048(MW)^{1/2})$
1.674	m	Effective stack diameter (D)	$D = (10^{-6}q_n)^{1/2}$

Combined Normal and SSM Emission Scenario

NOx	CO	VOC	SO_2	H2S	Units
15.52	125.32	138.0	-	-	lb/hr
3.02	24.27	24.25	-	-	tpy

Pilot, Normal and Upset Combined Flow

171.2	MMBtu/hr	Total heat input	Sum of fuel and flare gas heating values
37.87	g/mol	Total mean MW	Volume weighted average of gas MWs
1.20E+07	cal/sec	Heat release (q)	MMBtu/hr * 10^6 * 252 cal/Btu ÷ 3600 sec/hr
8,445,408		q_n	$q_n = q(1-0.048(MW)^{1/2})$
2.9061	m	Effective stack diameter (D)	$D = (10^{-6}q_n)^{1/2}$

Flare SSM GHG Emissions

§98.233(n) Flare stack GHG emissions.

flared Amine vent gas & Assist Gas

Step 1. Calculate contribution of un-combusted CH_4 emissions

$E_{a,CH4}$ (un-combusted) = V_a * (1- η)* X_{CH4} *(Equation W-39B)*

where:

$E_{a,CH4}$ = contribution of annual un-combusted CH_4 emissions from regenerator in cubic feet under actual conditions.

V_a = volume of gas sent to combustion unit during the year (cf)

η = Fraction of gas combusted by a burning flare (or regenerator), default value from Subpart W = 0.98

For gas sent to an unlit flare, η is zero. Stream 11

X_{CH4} = Mole fraction of CH_4 in gas to the flare = 0.27

Step 2. Calculate contribution of un-combusted CO_2 emissions

$E_{a,CO2}$ = V_a * X_{CO2} *(Equation W-20)*

where:

$E_{a,CO2}$ = contribution of annual un-combusted CO_2 emissions from regenerator in cubic feet under actual conditions.

V_a = volume of gas sent to combustion unit during the year (cf) Stream 11

X_{CO2} = Mole fraction of CO_2 in gas to the flare = 0.464

Step 3. Calculate contribution of combusted CO_2 emissions

$E_{a,CO2}$ (combusted) = Σ (η * V_a * Y_i * R_i) *(Equation W-21)*

where:

η = Fraction of gas combusted by a burning flare (or regenerator) = 0.98

For gas sent to an unlit flare, η is zero.

V_a = volume of gas sent to combustion unit during the year (cf)

Y_i = mole fraction of gas hydrocarbon constituents j: Stream 11

Constituent j, Methane =	0.2719
Constituent j, Ethane =	0.1906
Constituent j, Propane =	0.2786
Constituent j, Butane =	0.1556
Constituent j, Pentanes Plus =	0.034979868

R_i = number of carbon atoms in the gas hydrocarbon constituent j:

Constituent j, Methane =	1
Constituent j, Ethane =	2
Constituent j, Propane =	3
Constituent j, Butane =	4
Constituent j, Pentanes Plus =	5

Step 4. Calculate GHG volumetric emissions at standard conditions (scf).

$$E_{s,n} = \frac{E_{a,n} * (459.67 + T_s) * P_a}{(459.67 + T_a) * P_s}$$ *(Equation W-33)*

where:

$E_{s,n}$ = GHG i volumetric emissions at standard temperature and pressure (STP) in cubic feet

$E_{a,n}$ = GHG i volumetric emissions at actual conditions (cf)

T_s = Temperature at standard conditions (F) = 60 F

T_a = Temperature at actual conditions (F) = 76 F (Based on Annual Avg Max Temperature for Hobbs, NM from Western Regional Climate Center)

P_s = Absolute pressure at standard conditions (psia) = 14.7 psia

P_a = Absolute pressure at actual conditions (psia) = 14.7 psia (Assumption)

Constant = 459.67 (temperature conversion from F to R)

Step 5. Calculate annual CH_4 and CO_2 mass emissions (ton).

$Mass_{s,i}$ = $E_{s,i}$ * ρ_i * 0.0011023 *(Equation W-36)*

where:

$Mass_{s,i}$ = GHG i (CO_2, CH_4, or N_2O) mass emissions at standard conditions in tons (tpy)

$E_{s,i}$ = GHG i (CO_2, CH_4, or N_2O) volumetric emissions at standard conditions (cf)

ρ_i = Density of GHG i. Use:

CH_4: 0.0192 kg/ft^3 (at 60F and 14.7 psia)

CO_2: 0.0526 kg/ft^3 (at 60F and 14.7 psia)

Step 6. Calculate annual N_2O emissions from portable or stationary fuel combustion sources under actual conditions (cf) using Equation W-40 .

$Mass_{N2O}$ = 0.0011023 * Fuel * HHV * EF *(Equation W-40)*

where:

$Mass_{N2O}$ = annual N_2O emissions from combustion of a particular type of fuel (tons).

Fuel = mass or volume of the fuel combusted

HHV = high heat value of the fuel

Stream 11 = 2.163E-03 MMBtu/scf

EF = 1.00E-04 kg N_2O/MMBtu

10^{-3} = conversion factor from kg to metric tons.

Step 7. Calculate total annual emission from flare by summing Equations W-40, W-19, W-20, and W-21.

Gas Sent to Flare	Gas Sent to Flare (cf/yr)	CH_4 Un-Combusted, $E_{a,CH4}$ (cf)	CO_2 Un-Combusted, $E_{a,CO2}$ (cf)	CO_2 Combusted, $E_{a,CO2}$ (cf)	CH_4 Un-Combusted, $E_{a,CH4}$ (scf)	CO_2 Un-Combusted, $E_{a,CO2}$ (scf)	CO_2 Combusted, $E_{a,CO2}$ (scf)	CH_4 Un-Combusted, $E_{a,CH4}$ (tpy)	CO_2 Un-Combusted, $E_{a,CO2}$ (tpy)	CO_2 Combusted, $E_{a,CO2}$ (tpy)	N_2O Mass Emissions (tpy)	CO2e (tpy)
Stream 11	45,000,000	244,718	20,898,382.3	100,814,700.3	237,275.5	20,262,817.5	97,748,708.5	5.0	1,174.9	5,667.6	0.0107	6,971.2
							Total	**5.0**	**1,174.9**	**5,667.6**	**0.0**	**6,971.2**

	CO_2	CH_4	N_2O
GWP	1	25	298

Emission unit: F-001

Facility-wide Fugitive Emissions Per Piece of Equipment							
Subcomponent		**Emission Factor[1] (lb/hr/comp)**	**Control Efficiency**	**VOC Content[2] (wt%)**	**H_2S Content[2] (wt%)**	**HAP Content[2] (wt%)**	**Subcomponent Counts[3]**
Valves	Gas	9.92E-03	0.0%	21.99%	0.00%	0.56%	871
	Light Oil	5.51E-03	0.0%	100.00%	0.00000%	12.51%	871
	Heavy Oil	1.85E-05	0.0%	0.00%	0.00000%	0.00%	0
Flanges	Gas	8.60E-04	0.0%	21.99%	0.0000%	0.56%	0
	Light Oil	2.43E-04	0.0%	100.00%	0.000000%	12.51%	0
	Heavy Oil	8.60E-07	0.0%	0.00%	0.000000%	0.00%	0
Connectors	Gas	4.41E-04	0.0%	21.99%	0.00%	0.56%	2138
	Light Oil	4.63E-04	0.0%	100.00%	0.00000%	12.51%	2138
	Heavy Oil	1.65E-05	0.0%	0.00%	0.00000%	0.00%	0
Pumps	Light Oil	2.87E-02	0.0%	100.00%	0.00000%	12.51%	10
	Heavy Oil	2.87E-02	0.0%	0.00%	0.00000%	0.00%	0
Other	Gas	1.94E-02	0.0%	21.99%	0.00%	0.56%	0
	Light Oil	1.65E-02	0.0%	100.00%	0.00000%	12.51%	0
	Heavy Oil	7.06E-05	0.0%	0.00%	0.00000%	0.00%	0
				Hourly VOC Emission Rate (lb/hr)[4]			8.18
				Annual VOC Emission Rate (tpy)[5]			35.85
				Hourly H_2S Emission Rate (lb/hr)[4]			0.00
				Annual H_2S Emission Rate (tpy)[5]			0.00
				Hourly HAP Emission Rate (lb/hr)[4]			0.81
				Annual HAP Emission Rate (tpy)[5]			3.57

[1] Emission factors from Table 2-4 of EPA Protocol for Equipment Leak Emission Estimates, 1995.
[2] Weight percent of gas and liquid components are referenced from flash gas and liquid streams from a ProMax simulation for this facility.
[3] Subcomponent counts for each subcomponent are based on estimated average component counts for each piece of equipment.
[4] Hourly Emissions [lb/hr] = Emissions Factor [lb/hr/component] * Weight Content of Chemical Component [%] * Subcomponent Count.
[5] Annual Emissions [ton/yr] = Hourly Emissions [lb/hr] * 8760 [hr/yr] * 1/2000 [ton/lb].

Loading Emissions

Unit: LOAD
Description: Emissions from Truck Loading of Condensate

Emission Calculations

69,350	Throughput (bbl/yr)	Expected condensate throughput
2,912,700	Throughput (gal/yr)	bbl/d * 42 gal/bbl * 365 d/yr
9.82	tpy VOC	GRI-HAPCalc 3.01

Total HAPs	n-Hexane	Benzene	Toluene	e-Benzene	Xylenes		
0.4	0.39	0.04	0.00	0.001	0.0012	tpy	GRI-HAPCalc3.01

Slop Water Loading Emissions

Unit: LOAD_SLOP
Description: Emissions from Truck Loading of Slop Water

Emission Calculations

12,000	Throughput (bbl/yr)	Expected condensate throughput
504,000	Throughput (gal/yr)	bbl/d * 42 gal/bbl * 365 d/yr
10.3	tpy VOC	GRI-HAPCalc 3.01
1%	Based on 1% Crude Oil[1]	
0.10	**tpy VOC**	

Total HAPs	n-Hexane	Benzene	Toluene	e-Benzene	Xylenes		
0.5	0.41	0.05	0.02	0.0007	0.0012	tpy	GRI-HAPCalc3.01
1%	1%	1%	1%	1%	1%	%	Based on 1% Crude Oil[1]
4.71E-03	**4.08E-03**	**4.56E-04**	**1.51E-04**	**7.00E-06**	**1.20E-05**	tpy	

[1] Assume slop water contains 1% hydrocarbons per TCEQ guidance.

Haul Road Emissions

Input Data

Empty vehicle weight[1]	16	tons	
Load weight[2]	21.2	tons	
Loaded vehicle[3]	37.2	tons	
Mean vehicle weight[4]	26.6	tons	
Vehicle frequency	1.2	vehicles/day	Throughput (gal/yr) * (1 yr/365 days) * (1 truck/7,560 gal)
Vehicle frequency	1.2	trips/hour	Maximum
Round-trip distance	0.40	mile/trip	
Operating hours	8760	hours/yr	
Surface silt content[5]	1.8	%	
Annual wet days[6]	60	days/yr	
Vehicle miles traveled[7]	0.5	mile/hr	

Emission Factors and Constants

Parameter	PM_{30}	PM_{10}	$PM_{2.5}$
k, lb/VMT[8]	4.9	1.5	0.15
a, lb/VMT[8]	0.70	0.90	0.90
b, lb/VMT[8]	0.45	0.45	0.45
Hourly EF, lb/VMT[9]	3.47	0.73	0.07
Annual EF, lb/VMT[10]	2.90	0.61	0.06

Uncontrolled Emissions

PM_{30}	PM_{10}	$PM_{2.5}$	
1.7	0.36	0.036	lb/hr[11]
0.26	0.055	0.0055	ton/yr[12]

Footnotes

[1] Empty vehicle weight includes driver and occupants and full fuel load.
[2] Cargo, transported materials, etc. (lb/gal RVP11 *7560 gal truck/ 2000lb/ton)
[3] Loaded vehicle weight = Empty + Load Size
[4] Mean Vehicle weight = (Loaded Weight + Empty Weight) / 2
[5] AP-42 Table 13.2.2-1, Taconite mining and processing mean silt content
A 60% reduction in silt is used based on the use of gravel roads at this facility.
[6] AP-42 Figure 13.2.2-1
[7] VMT/hr = Vehicle Miles Traveled per hour = Trips per hour * Miles per trip
[8] Table 13.2.2-2, Industrial Roads
[9] AP-42 13.2.2, Equation 1a
[10] AP-42 13.2.2, Equation 2
[11] lb/hr = Hourly EF (lb/VMT) * VMT (mile/hr)
[12] ton/yr = Annual EF (lb/VMT) * Truck/day * Mile/truck * 365day/yr * 1ton/2000lb

Facility Malfunction Emissions

Unit: MALF
Description: Facility-wide malfunction emissions

Emission Calculations

Requested NO_X MALF:	7	tons/yr
Requested CO MALF:	10	tons/yr
Requested VOC MALF:	10	tons/yr
Requested SO_X MALF:	10	tons/yr
Requested H_2S MALF:	2	tons/yr
Inlet gas VOC content:	21.99	Mass %
Inlet gas CO_2 content:	3.28	Mass %
Inlet gas CH_4 content:	57.05	Mass %

Unit(s):	PIGGING		
Description:	Pig Receiver and Launcher Emissions		
Exemption:	20.2.72.202.B(5) NMAC		
Inlet Receiver Volume	140.00	scf/event	Estimate based on similar Facility Design
Safety Factor	100%		
Inlet Receiver Volume	280.00	scf/event	Calculated
Annual Events:	24	# of events/yr	Estimate based on similar Facility Design
Duration of Event	0.5	hr/event	Estimate
Number of Receivers:	1		Estimate based on similar Facility Design

Pigging Emissions based on Inlet Analysis

Composition	MW[2]	Wet vol/mol%[1]	Dry vol/mol%	MW*Mol%	Spec. Volume (scf/lb)[2]	Mass Flow (lb/hr)[3]	Mass Flow (lb/yr4	Mass Flow (ton/yr)[5]
Water	18.015	0.015%			21.06			
Nitrogen	28.013	2.72%	2.720%	0.76	13.55	1.12E-02	1.35E-01	6.75E-05
CO2	44.010	1.61%	1.605%	0.71	8.62	1.04E-02	1.25E-01	6.25E-05
H2S*	34.082	0.05%	0.050%	0.02	11.14	2.51E-04	3.02E-03	1.51E-06
Methane	16.043	76.6%	76.581%	12.29	23.65	1.81E-01	2.18E+00	1.09E-03
Ethane	30.070	10.1%	10.122%	3.04	12.62	4.49E-02	5.39E-01	2.70E-04
Propane	44.097	5.4%	5.385%	2.37	8.61	3.50E-02	4.20E-01	2.10E-04
i-Butane	58.123	0.67%	0.666%	0.39	6.53	5.71E-03	6.86E-02	3.43E-05
n-Butane	58.123	1.6%	1.563%	0.91	6.53	1.34E-02	1.61E-01	8.04E-05
2,2 Dimethylpropane	72.150	0.010%	0.010%	0.01	5.30	1.05E-04	1.26E-03	6.32E-07
i-Pentane	72.150	0.37%	0.366%	0.26	5.26	3.89E-03	4.67E-02	2.34E-05
n-Pentane	72.150	0.38%	0.382%	0.28	5.26	4.07E-03	4.88E-02	2.44E-05
2,2 Dimethylbutane	86.180	0.0040%	0.004%	0.003	5.26	4.23E-05	5.07E-04	2.54E-07
Cyclopentane	70.140	0.00%	0.000%	0.000	5.41	0.00E+00	0.00E+00	0.00E+00
2,3 Dimethylbutane	86.180	0.035%	0.035%	0.030	4.40	4.40E-04	5.28E-03	2.64E-06
2 Methylpentane	86.180	0.087%	0.087%	0.075	4.40	1.11E-03	1.33E-02	6.64E-06
3 Methylpentane	86.180	0.049%	0.049%	0.043	4.40	6.28E-04	7.53E-03	3.77E-06
n-Hexane	86.180	0.10%	0.100%	0.087	4.40	1.28E-03	1.53E-02	7.66E-06
Methylcyclopentane	84.160	0.053%	0.053%	0.045	4.51	6.60E-04	7.92E-03	3.96E-06
Cyclohexane	84.160	0.048%	0.048%	0.040	3.79	7.10E-04	8.52E-03	4.26E-06
2-Methylhexane	100.200	0.013%	0.013%	0.013	3.79	1.86E-04	2.23E-03	1.12E-06
3-Methylhexane	100.200	0.014%	0.014%	0.015	3.79	2.14E-04	2.57E-03	1.29E-06
n-Heptanes	100.200	0.066%	0.066%	0.066	3.79	9.78E-04	1.17E-02	5.87E-06
Other Heptanes	100.200	0.00%	0.000%	0.000	3.79	0.00E+00	0.00E+00	0.00E+00
Methylcyclohexane	98.190	0.036%	0.036%	0.036	3.87	5.27E-04	6.32E-03	3.16E-06
2,2,4-Trimethylpentane	114.230	0.00%	0.000%	0.000	3.32	0.00E+00	0.00E+00	0.00E+00
Benzene	78.110	0.024%	0.024%	0.018	4.86	2.72E-04	3.27E-03	1.63E-06
Toluene	92.140	0.014%	0.014%	0.013	4.12	1.93E-04	2.32E-03	1.16E-06
Ethylbenzene	106.170	0.00087%	0.001%	0.001	3.57	1.36E-05	1.63E-04	8.14E-08
Xylenes	106.170	0.0017%	0.002%	0.002	3.57	2.66E-05	3.19E-04	1.60E-07
C8+ heavies	114.230	0.0037%	0.004%	0.004	3.32	6.18E-05	7.41E-04	3.71E-07
Total		100.0%	100.0%	21.52				
Dry Total		100.0%				**0.32**	**3.81**	**0.0019**
VOC Total		**0.19**		**7.75**		**0.11**	**1.37**	**6.87E-04**

Notes

[1] Source: Promax RVP11 Simulation, SC Vapor Stream, from File: ProMax Report South Carlsbad_8
[2] From "Physical Properties of Hydrocarbons"
[3] Flow (lb/hr) = Volume (scf/event) / Duration (hr/event) / Sp. Vol. (scf/lb) * Mol%
[4] Flow (tons/yr) = Volume (scf/yr) / Sp. Vol. (scf/lb) * Mol%
[5] Flow (tons/yr) = Flow (lb/yr) / 2000 lb/ton

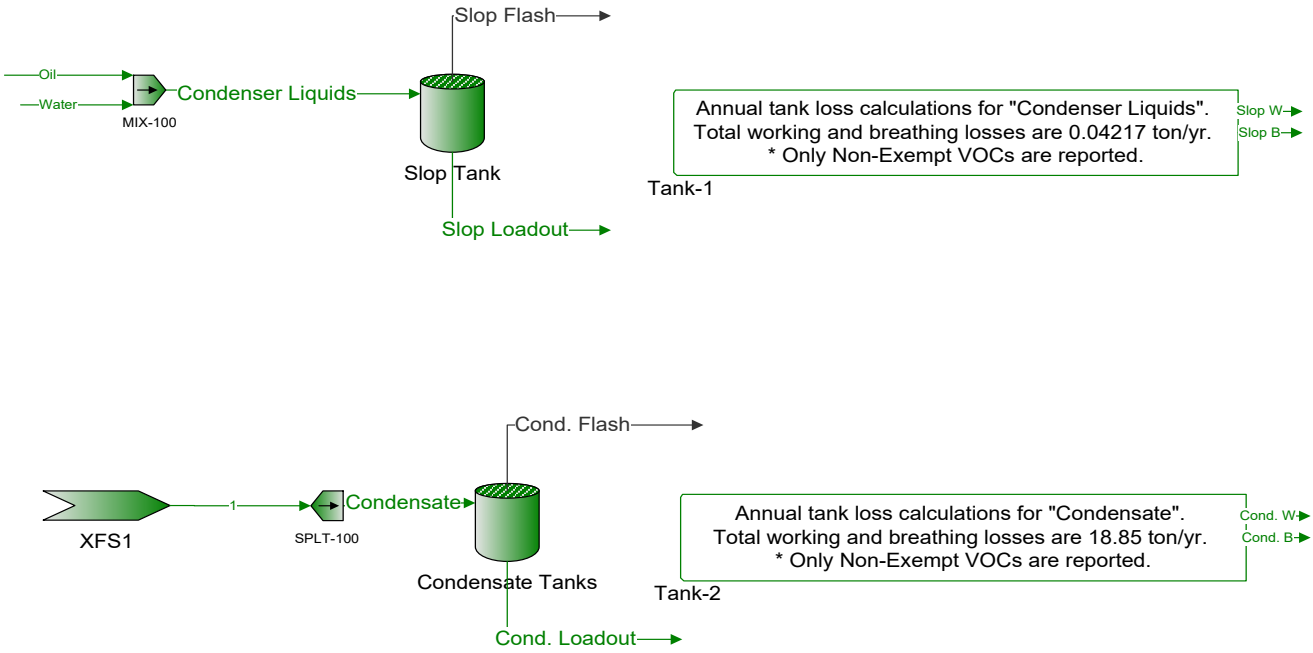
Slop Flash
Oil
Water
MIX-100
Condenser Liquids
Slop Tank
Slop Loadout
Annual tank loss calculations for "Condenser Liquids".
Total working and breathing losses are 0.04217 ton/yr.
* Only Non-Exempt VOCs are reported.
Slop W
Slop B
Tank-1

Cond. Flash
XFS1
1
SPLT-100
Condensate
Condensate Tanks
Cond. Loadout
Annual tank loss calculations for "Condensate".
Total working and breathing losses are 18.85 ton/yr.
* Only Non-Exempt VOCs are reported.
Cond. W
Cond. B
Tank-2

RVP11 Simulation used for VENT calculations

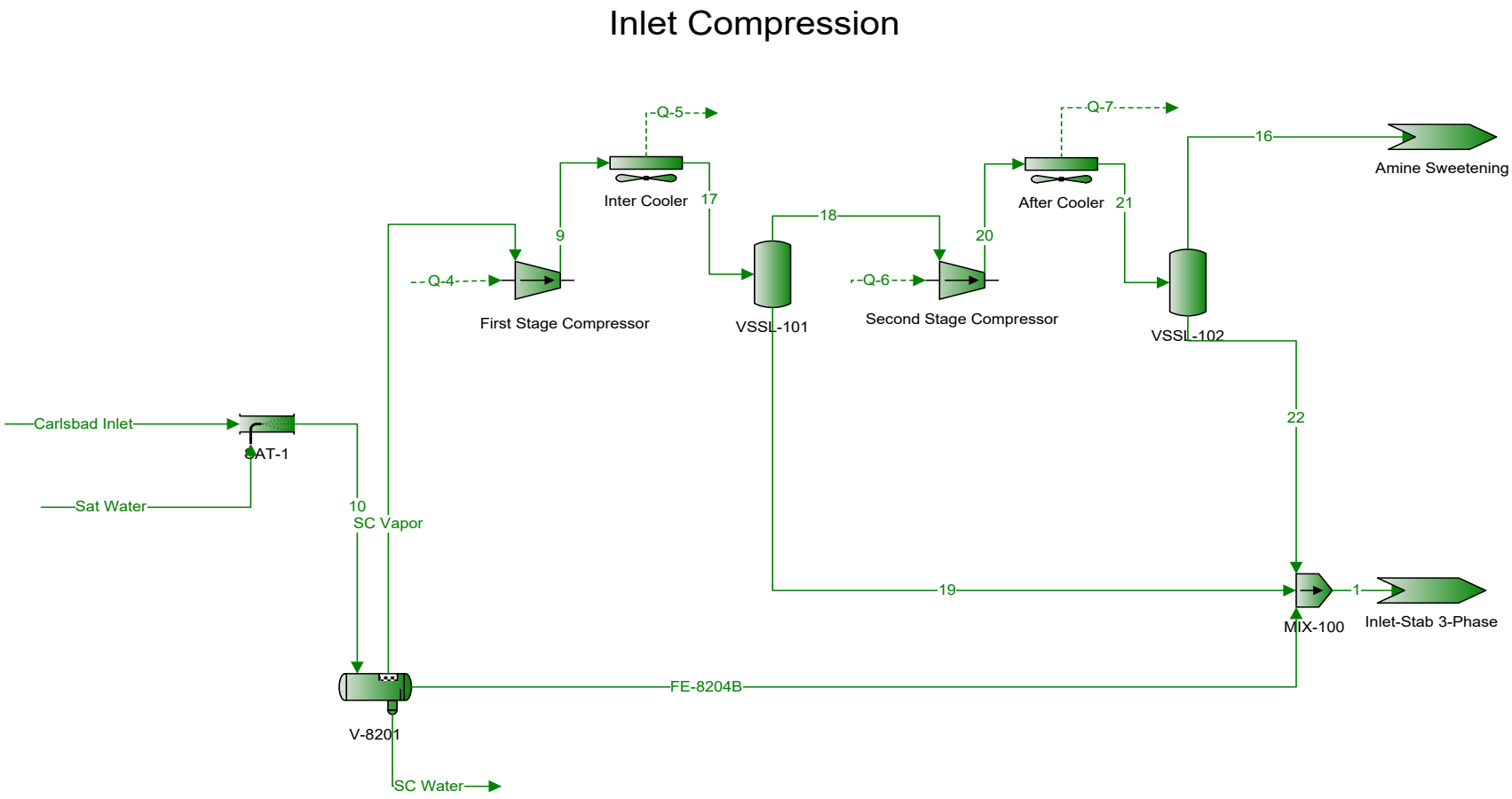

FOR RVP 11: Source - ProMax Report South Carlsbad_8

Section 7

Information Used To Determine Emissions

Information Used to Determine Emissions shall include the following:

- ☑ If manufacturer data are used, include specifications for emissions units and control equipment, including control efficiencies specifications and sufficient engineering data for verification of control equipment operation, including design drawings, test reports, and design parameters that affect normal operation.
- ☑ If test data are used, include a copy of the complete test report. If the test data are for an emissions unit other than the one being permitted, the emission units must be identical. Test data may not be used if any difference in operating conditions of the unit being permitted and the unit represented in the test report significantly effect emission rates.
- ☑ If the most current copy of AP-42 is used, reference the section and date located at the bottom of the page. Include a copy of the page containing the emissions factors, and clearly mark the factors used in the calculations.
- ☑ If an older version of AP-42 is used, include a complete copy of the section.
- ☑ If an EPA document or other material is referenced, include a complete copy.
- ☑ Fuel specifications sheet.
- ☑ If computer models are used to estimate emissions, include an input summary (if available) and a detailed report, and a disk containing the input file(s) used to run the model. For tank-flashing emissions, include a discussion of the method used to estimate tank-flashing emissions, relative thresholds (i.e., permit or major source (NSPS, PSD or Title V)), accuracy of the model, the input and output from simulation models and software, all calculations, documentation of any assumptions used, descriptions of sampling methods and conditions, copies of any lab sample analysis.

This section contains the following references or actual documentation to support the emissions in the required forms and the calculations in Section 6:

- Current version of AP-42 located online at: http://www.epa.gov/ttn/chief/ap42/index.html. Specific sections used in this application:
  - Section 1.4 –Natural Gas External Combustion Sources-Natural Gas (Table 1.4-1,2)
  - Section 3.1- Stationary Natural Gas Turbines (Table 3.1-2a)
  - Section 13.2.2 – Introduction to Fugitive Dust sources – Unpaved Roads
  - Section 13.5 – Industrial Flares (Table 13.5-1)
- HAPCalc® 3.01 run results loading
- ProMax Output for slop and condensate working and breathing emissions
- TCEQ TNRCC RG-109 Flare guidance documentation
- Turbine Stack Test Data – Reports (for Units 1 and 2)
- Turbine manufacturer specifications (for Unit 5)
- Armstrong Gas Lab Analysis No. 211306
- Stream 11 properties used for Unit Flare (SSM)
- Gas and liquid stream compositions used for Unit F-001

Table 1.4-1. EMISSION FACTORS FOR NITROGEN OXIDES (NO_x) AND CARBON MONOXIDE (CO) FROM NATURAL GAS COMBUSTION[a]

Combustor Type (MMBtu/hr Heat Input) [SCC]	NO_x[b]		CO	
	Emission Factor ($lb/10^6$ scf)	Emission Factor Rating	Emission Factor ($lb/10^6$ scf)	Emission Factor Rating
Large Wall-Fired Boilers (>100) [1-01-006-01, 1-02-006-01, 1-03-006-01]				
Uncontrolled (Pre-NSPS)[c]	280	A	84	B
Uncontrolled (Post-NSPS)[c]	190	A	84	B
Controlled - Low NO_x burners	140	A	84	B
Controlled - Flue gas recirculation	100	D	84	B
Small Boilers (<100) [1-01-006-02, 1-02-006-02, 1-03-006-02, 1-03-006-03]				
Uncontrolled	100	B	84	B
Controlled - Low NO_x burners	50	D	84	B
Controlled - Low NO_x burners/Flue gas recirculation	32	C	84	B
Tangential-Fired Boilers (All Sizes) [1-01-006-04]				
Uncontrolled	170	A	24	C
Controlled - Flue gas recirculation	76	D	98	D
Residential Furnaces (<0.3) [No SCC]				
Uncontrolled	94	B	40	B

[a] Reference 11. Units are in pounds of pollutant per million standard cubic feet of natural gas fired. To convert from $lb/10^6$ scf to $kg/10^6$ m^3, multiply by 16. Emission factors are based on an average natural gas higher heating value of 1,020 Btu/scf. To convert from $1b/10^6$ scf to lb/MMBtu, divide by 1,020. The emission factors in this table may be converted to other natural gas heating values by multiplying the given emission factor by the ratio of the specified heating value to this average heating value. SCC = Source Classification Code. ND = no data. NA = not applicable.

[b] Expressed as NO_2. For large and small wall fired boilers with SNCR control, apply a 24 percent reduction to the appropriate NO_X emission factor. For tangential-fired boilers with SNCR control, apply a 13 percent reduction to the appropriate NO_X emission factor.

[c] NSPS=New Source Performance Standard as defined in 40 CFR 60 Subparts D and Db. Post-NSPS units are boilers with greater than 250 MMBtu/hr of heat input that commenced construction modification, or reconstruction after August 17, 1971, and units with heat input capacities between 100 and 250 MMBtu/hr that commenced construction modification, or reconstruction after June 19, 1984.

TABLE 1.4-2. EMISSION FACTORS FOR CRITERIA POLLUTANTS AND GREENHOUSE GASES FROM NATURAL GAS COMBUSTION[a]

Pollutant	Emission Factor ($lb/10^6$ scf)	Emission Factor Rating
CO_2[b]	120,000	A
Lead	0.0005	D
N_2O (Uncontrolled)	2.2	E
N_2O (Controlled-low-NO_X burner)	0.64	E
PM (Total)[c]	7.6	D
PM (Condensable)[c]	5.7	D
PM (Filterable)[c]	1.9	B
SO_2[d]	0.6	A
TOC	11	B
Methane	2.3	B
VOC	5.5	C

[a] Reference 11. Units are in pounds of pollutant per million standard cubic feet of natural gas fired. Data are for all natural gas combustion sources. To convert from $lb/10^6$ scf to $kg/10^6$ m^3, multiply by 16. To convert from $lb/10^6$ scf to 1b/MMBtu, divide by 1,020. The emission factors in this table may be converted to other natural gas heating values by multiplying the given emission factor by the ratio of the specified heating value to this average heating value. TOC = Total Organic Compounds. VOC = Volatile Organic Compounds.

[b] Based on approximately 100% conversion of fuel carbon to CO_2. $CO_2[lb/10^6 \text{ scf}] = (3.67)(CON)(C)(D)$, where CON = fractional conversion of fuel carbon to CO_2, C = carbon content of fuel by weight (0.76), and D = density of fuel, 4.2×10^4 $lb/10^6$ scf.

[c] All PM (total, condensible, and filterable) is assumed to be less than 1.0 micrometer in diameter. Therefore, the PM emission factors presented here may be used to estimate PM_{10}, $PM_{2.5}$ or PM_1 emissions. Total PM is the sum of the filterable PM and condensible PM. Condensible PM is the particulate matter collected using EPA Method 202 (or equivalent). Filterable PM is the particulate matter collected on, or prior to, the filter of an EPA Method 5 (or equivalent) sampling train.

[d] Based on 100% conversion of fuel sulfur to SO_2. Assumes sulfur content is natural gas of 2,000 grains/10^6 scf. The SO_2 emission factor in this table can be converted to other natural gas sulfur contents by multiplying the SO_2 emission factor by the ratio of the site-specific sulfur content (grains/10^6 scf) to 2,000 grains/10^6 scf.

Table 3.1-2a. EMISSION FACTORS FOR CRITERIA POLLUTANTS AND GREENHOUSE GASES FROM STATIONARY GAS TURBINES

Emission Factors[a] - Uncontrolled				
Pollutant	Natural Gas-Fired Turbines[b]		Distillate Oil-Fired Turbines[d]	
	(lb/MMBtu)[c] (Fuel Input)	Emission Factor Rating	(lb/MMBtu)[e] (Fuel Input)	Emission Factor Rating
CO_2[f]	110	A	157	A
N_2O	0.003[g]	E	ND	NA
Lead	ND	NA	1.4 E-05	C
SO_2	0.94S[h]	B	1.01S[h]	B
Methane	8.6 E-03	C	ND	NA
VOC	2.1 E-03	D	4.1 E-04[j]	E
TOC[k]	1.1 E-02	B	4.0 E-03[l]	C
PM (condensible)	4.7 E-03[l]	C	7.2 E-03[l]	C
PM (filterable)	1.9 E-03[l]	C	4.3 E-03[l]	C
PM (total)	6.6 E-03[l]	C	1.2 E-02[l]	C

[a] Factors are derived from units operating at high loads (≥ 80 percent load) only. For information on units operating at other loads, consult the background report for this chapter (Reference 16), available at "www.epa.gov/ttn/chief". ND = No Data, NA = Not Applicable.

[b] SCCs for natural gas-fired turbines include 2-01-002-01, 2-02-002-01 & 03, and 2-03-002-02 & 03.

[c] Emission factors based on an average natural gas heating value (HHV) of 1020 Btu/scf at 60°F. To convert from (lb/MMBtu) to ($lb/10^6$ scf), multiply by 1020. Similarly, these emission factors can be converted to other natural gas heating values.

[d] SCCs for distillate oil-fired turbines are 2-01-001-01, 2-02-001-01, 2-02-001-03, and 2-03-001-02.

[e] Emission factors based on an average distillate oil heating value of 139 $MMBtu/10^3$ gallons. To convert from (lb/MMBtu) to ($lb/10^3$ gallons), multiply by 139.

[f] Based on 99.5% conversion of fuel carbon to CO_2 for natural gas and 99% conversion of fuel carbon to CO_2 for distillate oil. CO_2 (Natural Gas) [lb/MMBtu] = (0.0036 scf/Btu)(%CON)(C)(D), where %CON = weight percent conversion of fuel carbon to CO_2, C = carbon content of fuel by weight, and D = density of fuel. For natural gas, C is assumed at 75%, and D is assumed at 4.1 E+04 $lb/10^6$scf. For distillate oil, CO_2 (Distillate Oil) [lb/MMBtu] = (26.4 gal/MMBtu) (%CON)(C)(D), where C is assumed at 87%, and the D is assumed at 6.9 lb/gallon.

[g] Emission factor is carried over from the previous revision to AP-42 (Supplement B, October 1996) and is based on limited source tests on a single turbine with water-steam injection (Reference 5).

[h] All sulfur in the fuel is assumed to be converted to SO_2. S = percent sulfur in fuel. Example, if sulfur content in the fuel is 3.4 percent, then S = 3.4. If S is not available, use 3.4 E-03 lb/MMBtu for natural gas turbines, and 3.3 E-02 lb/MMBtu for distillate oil turbines (the equations are more accurate).

[j] VOC emissions are assumed equal to the sum of organic emissions.

[k] Pollutant referenced as THC in the gathered emission tests. It is assumed as TOC, because it is based on EPA Test Method 25A.

[l] Emission factors are based on combustion turbines using water-steam injection.

GRI-HAPCalc ® 3.01
Truck Loading Report

Facility ID:	**SOUTH CARLSBAD**	**Notes:**
Operation Type:	**COMPRESSOR STATION**	
Facility Name:	**SOUTH CARLSBAD**	
User Name:		
Units of Measure:	**U.S. STANDARD**	

Note: Emissions less than 5.00E-09 tons (or tonnes) per year are considered insignificant and are treated as zero. These emissions are indicated on the report with a "0". Emissions between 5.00E-09 and 5.00E-05 tons (or tonnes) per year are represented on the report with "0.0000".

Truck Loading Unit

Unit Name: LOAD

Annual Throughput:	69,350.00 bbl/yr	**Control Efficiency:**	0.00 %
Ambient Temperature:	74.00 °F		
Loading Factor:	0		

Type of Loading: 0.6 - Submerged loading, dedicated service

Is Truck Required to Pass Annual Inspection?: NO

Are Vapors Routed to Control Device?: NO

User Concentration Inputs

Chemical Name	Feed Wt %
Ethane	0.0000
Propane	0.0000
Butane	3.7430
Pentane	32.4470
C6+	63.8100
n-Hexane	8.7170
Benzene	1.5710
Toluene	1.7570
Ethylbenzene	0.2380
Xylenes(m,p,o)	0.5100
2,2,4-Trimethylpentane	0.0000

Calculated Emissions (ton/yr)

Chemical Name	Emissions
HAPs	
Benzene	0.0433
Toluene	0.0144
Ethylbenzene	0.0007
Xylenes(m,p,o)	0.0012
n-Hexane	0.3880
Total	0.4476
Criteria Pollutants	
NMHC	9.8020
NMEHC	9.8020

Other Pollutants

Butane	2.0418
Pentane	4.9199
C6+	2.8402

January 11, 2020

FESCO, Ltd.
105 Medical Dr. - Ozona,Texas 76943

For: Enterprise Field Services, LLC
P. O. Box 1508
Carlsbad, New Mexico 88221

Sample: South Carlsbad Gas Plant
Inlet to the Plant Gas
Spot Gas Sample @ 280 psig & 53 °F

Equipment: Normal Operating Conditions as per Customer
Date Sampled: 01/08/2020 @ 10:59 CST Job Number: 200013.104
COC No.: 3560

CHROMATOGRAPH EXTENDED ANALYSIS - GPA 2286

COMPONENT	MOL%	GPM
Hydrogen Sulfide*	< 0.001	
Nitrogen	1.313	
Carbon Dioxide	0.319	
Methane	80.464	
Ethane	10.387	2.771
Propane	4.642	1.276
Isobutane	0.609	0.199
n-Butane	1.341	0.422
2-2 Dimethylpropane	0.001	0.000
Isopentane	0.299	0.109
n-Pentane	0.304	0.110
Hexanes	0.163	0.067
Heptanes Plus	0.158	0.062
Totals	100.000	5.016

Computed Real Characteristics Of Heptanes Plus:

Specific Gravity	3.254	(Air=1)
Molecular Weight	93.94	
Gross Heating Value	4831	BTU/CF

Computed Real Characteristics Of Total Sample:

Specific Gravity	0.708	(Air=1)
Compressibility (Z)	0.9967	
Molecular Weight	20.44	
Gross Heating Value		
Dry Basis	1217	BTU/CF
Saturated Basis	1196	BTU/CF

*Hydrogen Sulfide tested on location by: Stain Tube Method (GPA 2377)
0.016 Gr/100 CF, 0.3 PPMV or <0.0001 Mol%

Detector Tube: Gastec 4LT 0.05 to 4.0 ppm (Meas. Range)
Base Conditions: 14.650 PSI & 60 Deg F

Sampled By: (08)McCollum
Analyst: JBM
Processor: BMc
Cylinder ID: X-0933

Certified: FESCO, Ltd. - Ozona, Texas

Tom Anderson 325-392-3773

CHROMATOGRAPH EXTENDED ANALYSIS - GPA 2286
TOTAL REPORT

COMPONENT	MOL %	GPM	WT %
Hydrogen Sulfide*	< 0.001		< 0.001
Nitrogen	1.313		1.799
Carbon Dioxide	0.319		0.687
Methane	80.464		63.138
Ethane	10.387	2.771	15.277
Propane	4.642	1.276	10.012
Isobutane	0.609	0.199	1.731
n-Butane	1.341	0.422	3.812
2,2 Dimethylpropane	0.001	0.000	0.004
Isopentane	0.299	0.109	1.055
n-Pentane	0.304	0.110	1.073
2,2 Dimethylbutane	0.005	0.002	0.021
Cyclopentane	0.000	0.000	0.000
2,3 Dimethylbutane	0.018	0.007	0.076
2 Methylpentane	0.052	0.022	0.219
3 Methylpentane	0.028	0.011	0.118
n-Hexane	0.060	0.025	0.253
Methylcyclopentane	0.025	0.009	0.103
Benzene	0.010	0.003	0.038
Cyclohexane	0.029	0.010	0.119
2-Methylhexane	0.007	0.003	0.034
3-Methylhexane	0.008	0.004	0.039
2,2,4 Trimethylpentane	0.000	0.000	0.000
Other C7's	0.018	0.008	0.087
n-Heptane	0.013	0.006	0.064
Methylcyclohexane	0.023	0.009	0.110
Toluene	0.007	0.002	0.032
Other C8's	0.012	0.006	0.065
n-Octane	0.003	0.002	0.017
Ethylbenzene	0.000	0.000	0.000
M & P Xylenes	0.001	0.000	0.005
O-Xylene	0.000	0.000	0.000
Other C9's	0.002	0.001	0.012
n-Nonane	0.000	0.000	0.000
Other C10's	0.000	0.000	0.000
n-Decane	0.000	0.000	0.000
Undecanes (11)	0.000	0.000	0.000
Totals	100.000	5.016	100.000

Computed Real Characteristics Of Total Sample:

Specific Gravity	0.708	(Air=1)
Compressibility (Z)	0.9967	
Molecular Weight	20.44	
Gross Heating Value		
Dry Basis	1217	BTU/CF
Saturated Basis	1196	BTU/CF

GRI-GLYCalc VERSION 4.0 - AGGREGATE CALCULATIONS REPORT

Case Name: Enterprise South Carlsbad
File Name: C:\Users\jzenker\Trinity Consultants, Inc\Enterprise Products - PROJECT\153201.0159 NSR Sig Rev\06 CALCULATIONS\GlyCalc\South Carlsbad GLYCalc VOC_v0.4.ddf
Date: September 04, 2020

DESCRIPTION:

Description: Updated gas analysis for dehy based on South Carlsbad Max Hourly Rate.pmx - Sweet gas stream received from Ms. Jing Li (EPCO)

Annual Hours of Operation: 8760.0 hours/yr

EMISSIONS REPORTS:

CONTROLLED REGENERATOR EMISSIONS

Component	lbs/hr	lbs/day	tons/yr
Hydrogen Sulfide	0.0345	0.828	0.1511
Methane	2.0630	49.511	9.0357
Ethane	4.0149	96.358	17.5854
Propane	8.3661	200.786	36.6434
Isobutane	2.2448	53.875	9.8322
n-Butane	7.0025	168.059	30.6708
Isopentane	1.8013	43.230	7.8895
n-Pentane	2.4410	58.585	10.6918
n-Hexane	0.7973	19.135	3.4922
Cyclohexane	1.5682	37.636	6.8685
Other Hexanes	1.3772	33.052	6.0320
Heptanes	0.8359	20.062	3.6613
Methylcyclohexane	1.1244	26.985	4.9248
Benzene	4.1552	99.724	18.1996
Toluene	2.5872	62.093	11.3319
Xylenes	0.2782	6.677	1.2185
C8+ Heavies	0.0125	0.300	0.0548
Total Emissions	40.7040	976.897	178.2836
Total Hydrocarbon Emissions	40.6695	976.069	178.1325
Total VOC Emissions	34.5916	830.199	151.5114
Total HAP Emissions	7.8179	187.628	34.2422
Total BTEX Emissions	7.0205	168.493	30.7500

UNCONTROLLED REGENERATOR EMISSIONS

Component	lbs/hr	lbs/day	tons/yr
Hydrogen Sulfide	0.0371	0.890	0.1624
Methane	2.0663	49.592	9.0505
Ethane	4.0347	96.832	17.6719
Propane	8.5299	204.717	37.3609
Isobutane	2.3320	55.969	10.2143
n-Butane	7.3974	177.539	32.4008
Isopentane	2.0747	49.793	9.0871
n-Pentane	2.8323	67.976	12.4056
n-Hexane	1.1418	27.403	5.0011
Cyclohexane	2.5465	61.117	11.1538
Other Hexanes	1.8032	43.277	7.8981
Heptanes	1.8748	44.995	8.2115
Methylcyclohexane	2.5316	60.758	11.0883
Benzene	7.2972	175.133	31.9618
Toluene	8.1400	195.361	35.6534
Xylenes	2.5339	60.814	11.0986
C8+ Heavies	5.3119	127.485	23.2660
Total Emissions	62.4854	1499.650	273.6861
Total Hydrocarbon Emissions	62.4483	1498.760	273.5238
Total VOC Emissions	56.3473	1352.336	246.8013
Total HAP Emissions	19.1130	458.711	83.7148
Total BTEX Emissions	17.9712	431.308	78.7138

FLASH TANK OFF GAS

Component	lbs/hr	lbs/day	tons/yr
Hydrogen Sulfide	0.0036	0.087	0.0158
Methane	19.7893	474.943	86.6771
Ethane	11.4918	275.803	50.3340
Propane	8.9269	214.245	39.0996
Isobutane	1.5885	38.123	6.9575
n-Butane	3.7218	89.323	16.3014
Isopentane	0.9009	21.622	3.9460
n-Pentane	0.9619	23.085	4.2130
n-Hexane	0.2122	5.094	0.9297
Cyclohexane	0.1358	3.260	0.5950
Other Hexanes	0.4529	10.870	1.9837
Heptanes	0.1711	4.107	0.7494
Methylcyclohexane	0.1017	2.442	0.4456
Benzene	0.0380	0.912	0.1664
Toluene	0.0270	0.647	0.1181
Xylenes	0.0030	0.073	0.0133

C8+ Heavies	0.0568	1.362	0.2486
Total Emissions	48.5832	1165.996	212.7943

Total Hydrocarbon Emissions	48.5795	1165.909	212.7784
Total VOC Emissions	17.2985	415.163	75.7673
Total HAP Emissions	0.2802	6.725	1.2274
Total BTEX Emissions	0.0680	1.631	0.2977

EQUIPMENT REPORTS:

CONDENSER

Condenser Outlet Temperature: 110.00 deg. F
Condenser Pressure: 13.10 psia
Condenser Duty: 7.69e-001 MM BTU/hr
Hydrocarbon Recovery: 1.70 bbls/day
Produced Water: 68.54 bbls/day
VOC Control Efficiency: 38.61 %
HAP Control Efficiency: 59.10 %
BTEX Control Efficiency: 60.93 %
Dissolved Hydrocarbons in Water: 643.60 mg/L

Component	Emitted	Condensed
Water	0.17%	99.83%
Carbon Dioxide	97.79%	2.21%
Hydrogen Sulfide	93.07%	6.93%
Nitrogen	99.89%	0.11%
Methane	99.84%	0.16%
Ethane	99.51%	0.49%
Propane	98.08%	1.92%
Isobutane	96.26%	3.74%
n-Butane	94.66%	5.34%
Isopentane	86.82%	13.18%
n-Pentane	86.19%	13.81%
n-Hexane	69.83%	30.17%
Cyclohexane	61.58%	38.42%
Other Hexanes	76.37%	23.63%
Heptanes	44.59%	55.41%
Methylcyclohexane	44.41%	55.59%
Benzene	56.94%	43.06%
Toluene	31.78%	68.22%
Xylenes	10.98%	89.02%
C8+ Heavies	0.24%	99.76%

ABSORBER

Calculated Absorber Stages: 2.05
Specified Dry Gas Dew Point: 7.00 lbs. H2O/MMSCF
Temperature: 120.0 deg. F
Pressure: 750.0 psig
Dry Gas Flow Rate: 200.0000 MMSCF/day
Glycol Losses with Dry Gas: 5.8623 lb/hr
Wet Gas Water Content: Saturated
Calculated Wet Gas Water Content: 126.81 lbs. H2O/MMSCF
Calculated Lean Glycol Recirc. Ratio: 1.20 gal/lb H2O

Component	Remaining in Dry Gas	Absorbed in Glycol
Water	5.51%	94.49%
Carbon Dioxide	99.90%	0.10%
Hydrogen Sulfide	99.46%	0.54%
Nitrogen	99.99%	0.01%
Methane	99.99%	0.01%
Ethane	99.98%	0.02%
Propane	99.96%	0.04%
Isobutane	99.95%	0.05%
n-Butane	99.94%	0.06%
Isopentane	99.94%	0.06%
n-Pentane	99.92%	0.08%
n-Hexane	99.88%	0.12%
Cyclohexane	99.50%	0.50%
Other Hexanes	99.91%	0.09%
Heptanes	99.80%	0.20%
Methylcyclohexane	99.47%	0.53%
Benzene	95.72%	4.28%
Toluene	94.23%	5.77%
Xylenes	89.11%	10.89%
C8+ Heavies	99.16%	0.84%

FLASH TANK

Flash Control: Vented to atmosphere
Flash Temperature: 100.0 deg. F
Flash Pressure: 73.0 psig

Component	Left in Glycol	Removed in Flash Gas
Water	99.99%	0.01%
Carbon Dioxide	61.37%	38.63%
Hydrogen Sulfide	91.11%	8.89%
Nitrogen	8.57%	91.43%
Methane	9.45%	90.55%

Ethane	25.99%	74.01%
Propane	48.86%	51.14%
Isobutane	59.48%	40.52%
n-Butane	66.53%	33.47%
Isopentane	69.87%	30.13%
n-Pentane	74.77%	25.23%
n-Hexane	84.40%	15.60%
Cyclohexane	95.10%	4.90%
Other Hexanes	80.13%	19.87%
Heptanes	91.68%	8.32%
Methylcyclohexane	96.29%	3.71%
Benzene	99.51%	0.49%
Toluene	99.70%	0.30%
Xylenes	99.90%	0.10%
C8+ Heavies	99.07%	0.93%

REGENERATOR

No Stripping Gas used in regenerator.

Component	Remaining in Glycol	Distilled Overhead
Water	10.11%	89.89%
Carbon Dioxide	0.00%	100.00%
Hydrogen Sulfide	0.00%	100.00%
Nitrogen	0.00%	100.00%
Methane	0.00%	100.00%
Ethane	0.00%	100.00%
Propane	0.00%	100.00%
Isobutane	0.00%	100.00%
n-Butane	0.00%	100.00%
Isopentane	0.72%	99.28%
n-Pentane	0.67%	99.33%
n-Hexane	0.59%	99.41%
Cyclohexane	3.37%	96.63%
Other Hexanes	1.25%	98.75%
Heptanes	0.55%	99.45%
Methylcyclohexane	4.16%	95.84%
Benzene	5.03%	94.97%
Toluene	7.93%	92.07%
Xylenes	12.99%	87.01%
C8+ Heavies	12.18%	87.82%

STREAM REPORTS:

WET GAS STREAM

Temperature: 120.00 deg. F
Pressure: 764.70 psia
Flow Rate: 8.36e+006 scfh

Component	Conc. (vol%)	Loading (lb/hr)
Water	2.67e-001	1.06e+003
Carbon Dioxide	3.18e-001	3.08e+003
Hydrogen Sulfide	9.97e-004	7.49e+000
Nitrogen	1.31e+000	8.08e+003
Methane	8.02e+001	2.83e+005
Ethane	1.04e+001	6.86e+004
Propane	4.63e+000	4.50e+004
Isobutane	6.07e-001	7.77e+003
n-Butane	1.34e+000	1.71e+004
Isopentane	2.98e-001	4.74e+003
n-Pentane	3.03e-001	4.82e+003
n-Hexane	5.98e-002	1.14e+003
Cyclohexane	2.89e-002	5.36e+002
Other Hexanes	1.28e-001	2.42e+003
Heptanes	4.59e-002	1.01e+003
Methylcyclohexane	2.29e-002	4.96e+002
Benzene	9.97e-003	1.72e+002
Toluene	6.98e-003	1.42e+002
Xylenes	9.97e-004	2.33e+001
C8+ Heavies	1.70e-002	6.36e+002
Total Components	100.00	4.50e+005

DRY GAS STREAM

Temperature: 120.00 deg. F
Pressure: 764.70 psia
Flow Rate: 8.33e+006 scfh

Component	Conc. (vol%)	Loading (lb/hr)
Water	1.47e-002	5.83e+001
Carbon Dioxide	3.19e-001	3.08e+003
Hydrogen Sulfide	9.95e-004	7.45e+000
Nitrogen	1.31e+000	8.08e+003
Methane	8.05e+001	2.83e+005
Ethane	1.04e+001	6.86e+004

Propane	4.64e+000	4.49e+004
Isobutane	6.09e-001	7.77e+003
n-Butane	1.34e+000	1.71e+004
Isopentane	2.99e-001	4.74e+003
n-Pentane	3.04e-001	4.81e+003
n-Hexane	5.99e-002	1.13e+003
Cyclohexane	2.89e-002	5.33e+002
Other Hexanes	1.28e-001	2.42e+003
Heptanes	4.59e-002	1.01e+003
Methylcyclohexane	2.29e-002	4.93e+002
Benzene	9.57e-003	1.64e+002
Toluene	6.60e-003	1.34e+002
Xylenes	8.91e-004	2.08e+001
C8+ Heavies	1.69e-002	6.31e+002
Total Components	100.00	4.49e+005

LEAN GLYCOL STREAM

Temperature: 120.00 deg. F
Flow Rate: 2.00e+001 gpm

Component	Conc. (wt%)	Loading (lb/hr)
TEG	9.90e+001	1.11e+004
Water	1.00e+000	1.13e+002
Carbon Dioxide	2.61e-012	2.94e-010
Hydrogen Sulfide	3.61e-014	4.07e-012
Nitrogen	5.97e-013	6.72e-011
Methane	6.52e-018	7.34e-016
Ethane	6.51e-008	7.33e-006
Propane	6.31e-009	7.11e-007
Isobutane	1.04e-009	1.18e-007
n-Butane	2.45e-009	2.76e-007
Isopentane	1.33e-004	1.50e-002
n-Pentane	1.69e-004	1.91e-002
n-Hexane	6.04e-005	6.81e-003
Cyclohexane	7.87e-004	8.87e-002
Other Hexanes	2.02e-004	2.28e-002
Heptanes	9.13e-005	1.03e-002
Methylcyclohexane	9.75e-004	1.10e-001
Benzene	3.43e-003	3.86e-001
Toluene	6.23e-003	7.01e-001
Xylenes	3.36e-003	3.78e-001
C8+ Heavies	6.54e-003	7.36e-001
Total Components	100.00	1.13e+004

RICH GLYCOL STREAM

Temperature: 120.00 deg. F
Pressure: 764.70 psia
Flow Rate: 2.22e+001 gpm
NOTE: Stream has more than one phase.

Component	Conc. (wt%)	Loading (lb/hr)
TEG	9.00e+001	1.11e+004
Water	9.02e+000	1.11e+003
Carbon Dioxide	2.38e-002	2.94e+000
Hydrogen Sulfide	3.29e-004	4.07e-002
Nitrogen	5.40e-003	6.67e-001
Methane	1.77e-001	2.19e+001
Ethane	1.26e-001	1.55e+001
Propane	1.41e-001	1.75e+001
Isobutane	3.17e-002	3.92e+000
n-Butane	9.00e-002	1.11e+001
Isopentane	2.42e-002	2.99e+000
n-Pentane	3.09e-002	3.81e+000
n-Hexane	1.10e-002	1.36e+000
Cyclohexane	2.24e-002	2.77e+000
Other Hexanes	1.84e-002	2.28e+000
Heptanes	1.66e-002	2.06e+000
Methylcyclohexane	2.22e-002	2.74e+000
Benzene	6.25e-002	7.72e+000
Toluene	7.18e-002	8.87e+000
Xylenes	2.36e-002	2.92e+000
C8+ Heavies	4.94e-002	6.11e+000
Total Components	100.00	1.24e+004

FLASH TANK OFF GAS STREAM

Temperature: 100.00 deg. F
Pressure: 87.70 psia
Flow Rate: 7.59e+002 scfh

Component	Conc. (vol%)	Loading (lb/hr)
Water	2.41e-001	8.69e-002
Carbon Dioxide	1.29e+000	1.13e+000
Hydrogen Sulfide	5.31e-003	3.62e-003
Nitrogen	1.09e+000	6.10e-001
Methane	6.16e+001	1.98e+001

Ethane	1.91e+001	1.15e+001
Propane	1.01e+001	8.93e+000
Isobutane	1.37e+000	1.59e+000
n-Butane	3.20e+000	3.72e+000
Isopentane	6.24e-001	9.01e-001
n-Pentane	6.66e-001	9.62e-001
n-Hexane	1.23e-001	2.12e-001
Cyclohexane	8.07e-002	1.36e-001
Other Hexanes	2.63e-001	4.53e-001
Heptanes	8.53e-002	1.71e-001
Methylcyclohexane	5.18e-002	1.02e-001
Benzene	2.43e-002	3.80e-002
Toluene	1.46e-002	2.70e-002
Xylenes	1.43e-003	3.03e-003
C8+ Heavies	1.66e-002	5.68e-002
Total Components	100.00	5.04e+001

FLASH TANK GLYCOL STREAM

Temperature: 100.00 deg. F
Flow Rate: 2.21e+001 gpm

Component	Conc. (wt%)	Loading (lb/hr)
TEG	9.04e+001	1.11e+004
Water	9.05e+000	1.11e+003
Carbon Dioxide	1.46e-002	1.80e+000
Hydrogen Sulfide	3.01e-004	3.71e-002
Nitrogen	4.65e-004	5.72e-002
Methane	1.68e-002	2.07e+000
Ethane	3.28e-002	4.03e+000
Propane	6.93e-002	8.53e+000
Isobutane	1.90e-002	2.33e+000
n-Butane	6.01e-002	7.40e+000
Isopentane	1.70e-002	2.09e+000
n-Pentane	2.32e-002	2.85e+000
n-Hexane	9.33e-003	1.15e+000
Cyclohexane	2.14e-002	2.64e+000
Other Hexanes	1.48e-002	1.83e+000
Heptanes	1.53e-002	1.89e+000
Methylcyclohexane	2.15e-002	2.64e+000
Benzene	6.24e-002	7.68e+000
Toluene	7.19e-002	8.84e+000
Xylenes	2.37e-002	2.91e+000
C8+ Heavies	4.92e-002	6.05e+000
Total Components	100.00	1.23e+004

REGENERATOR OVERHEADS STREAM

Temperature: 212.00 deg. F
Pressure: 14.70 psia
Flow Rate: 2.15e+004 scfh

Component	Conc. (vol%)	Loading (lb/hr)
Water	9.81e+001	1.00e+003
Carbon Dioxide	7.22e-002	1.80e+000
Hydrogen Sulfide	1.92e-003	3.71e-002
Nitrogen	3.60e-003	5.72e-002
Methane	2.27e-001	2.07e+000
Ethane	2.37e-001	4.03e+000
Propane	3.41e-001	8.53e+000
Isobutane	7.08e-002	2.33e+000
n-Butane	2.25e-001	7.40e+000
Isopentane	5.07e-002	2.07e+000
n-Pentane	6.93e-002	2.83e+000
n-Hexane	2.34e-002	1.14e+000
Cyclohexane	5.34e-002	2.55e+000
Other Hexanes	3.69e-002	1.80e+000
Heptanes	3.30e-002	1.87e+000
Methylcyclohexane	4.55e-002	2.53e+000
Benzene	1.65e-001	7.30e+000
Toluene	1.56e-001	8.14e+000
Xylenes	4.21e-002	2.53e+000
C8+ Heavies	5.50e-002	5.31e+000
Total Components	100.00	1.07e+003

CONDENSER VENT GAS STREAM

Temperature: 110.00 deg. F
Pressure: 13.10 psia
Flow Rate: 3.62e+002 scfh

Component	Conc. (vol%)	Loading (lb/hr)
Water	9.80e+000	1.68e+000
Carbon Dioxide	4.20e+000	1.76e+000
Hydrogen Sulfide	1.06e-001	3.45e-002
Nitrogen	2.14e-001	5.72e-002
Methane	1.35e+001	2.06e+000
Ethane	1.40e+001	4.01e+000
Propane	1.99e+001	8.37e+000

Isobutane	4.05e+000	2.24e+000
n-Butane	1.26e+001	7.00e+000
Isopentane	2.62e+000	1.80e+000
n-Pentane	3.55e+000	2.44e+000
n-Hexane	9.70e-001	7.97e-001
Cyclohexane	1.95e+000	1.57e+000
Other Hexanes	1.68e+000	1.38e+000
Heptanes	8.74e-001	8.36e-001
Methylcyclohexane	1.20e+000	1.12e+000
Benzene	5.58e+000	4.16e+000
Toluene	2.94e+000	2.59e+000
Xylenes	2.75e-001	2.78e-001
C8+ Heavies	7.70e-003	1.25e-002
Total Components	100.00	4.42e+001

CONDENSER PRODUCED WATER STREAM

Temperature: 110.00 deg. F
Flow Rate: 2.00e+000 gpm

Component	Conc. (wt%)	Loading (lb/hr)	(ppm)
Water	9.99e+001	1.00e+003	999318.
Carbon Dioxide	3.65e-003	3.65e-002	37.
Hydrogen Sulfide	2.31e-004	2.31e-003	2.
Nitrogen	2.89e-006	2.89e-005	0.
Methane	2.06e-004	2.06e-003	2.
Ethane	4.67e-004	4.68e-003	5.
Propane	9.27e-004	9.27e-003	9.
Isobutane	1.37e-004	1.37e-003	1.
n-Butane	5.74e-004	5.74e-003	6.
Isopentane	1.06e-004	1.06e-003	1.
n-Pentane	1.55e-004	1.55e-003	2.
n-Hexane	4.27e-005	4.27e-004	0.
Cyclohexane	4.90e-004	4.91e-003	5.
Other Hexanes	5.90e-005	5.90e-004	1.
Heptanes	2.51e-005	2.51e-004	0.
Methylcyclohexane	1.69e-004	1.69e-003	2.
Benzene	3.86e-002	3.86e-001	386.
Toluene	2.01e-002	2.01e-001	201.
Xylenes	2.32e-003	2.32e-002	23.
C8+ Heavies	2.31e-007	2.31e-006	0.
Total Components	100.00	1.00e+003	1000000.

CONDENSER RECOVERED OIL STREAM

Temperature: 110.00 deg. F
Flow Rate: 4.97e-002 gpm

Component	Conc. (wt%)	Loading (lb/hr)
Water	3.79e-002	8.02e-003
Carbon Dioxide	1.52e-002	3.22e-003
Hydrogen Sulfide	1.20e-003	2.55e-004
Nitrogen	1.70e-004	3.59e-005
Methane	6.22e-003	1.32e-003
Ethane	7.13e-002	1.51e-002
Propane	7.31e-001	1.55e-001
Isobutane	4.06e-001	8.59e-002
n-Butane	1.84e+000	3.89e-001
Isopentane	1.29e+000	2.72e-001
n-Pentane	1.84e+000	3.90e-001
n-Hexane	1.63e+000	3.44e-001
Cyclohexane	4.60e+000	9.73e-001
Other Hexanes	2.01e+000	4.25e-001
Heptanes	4.91e+000	1.04e+000
Methylcyclohexane	6.65e+000	1.41e+000
Benzene	1.30e+001	2.76e+000
Toluene	2.53e+001	5.35e+000
Xylenes	1.06e+001	2.23e+000
C8+ Heavies	2.51e+001	5.30e+000
Total Components	100.00	2.11e+001

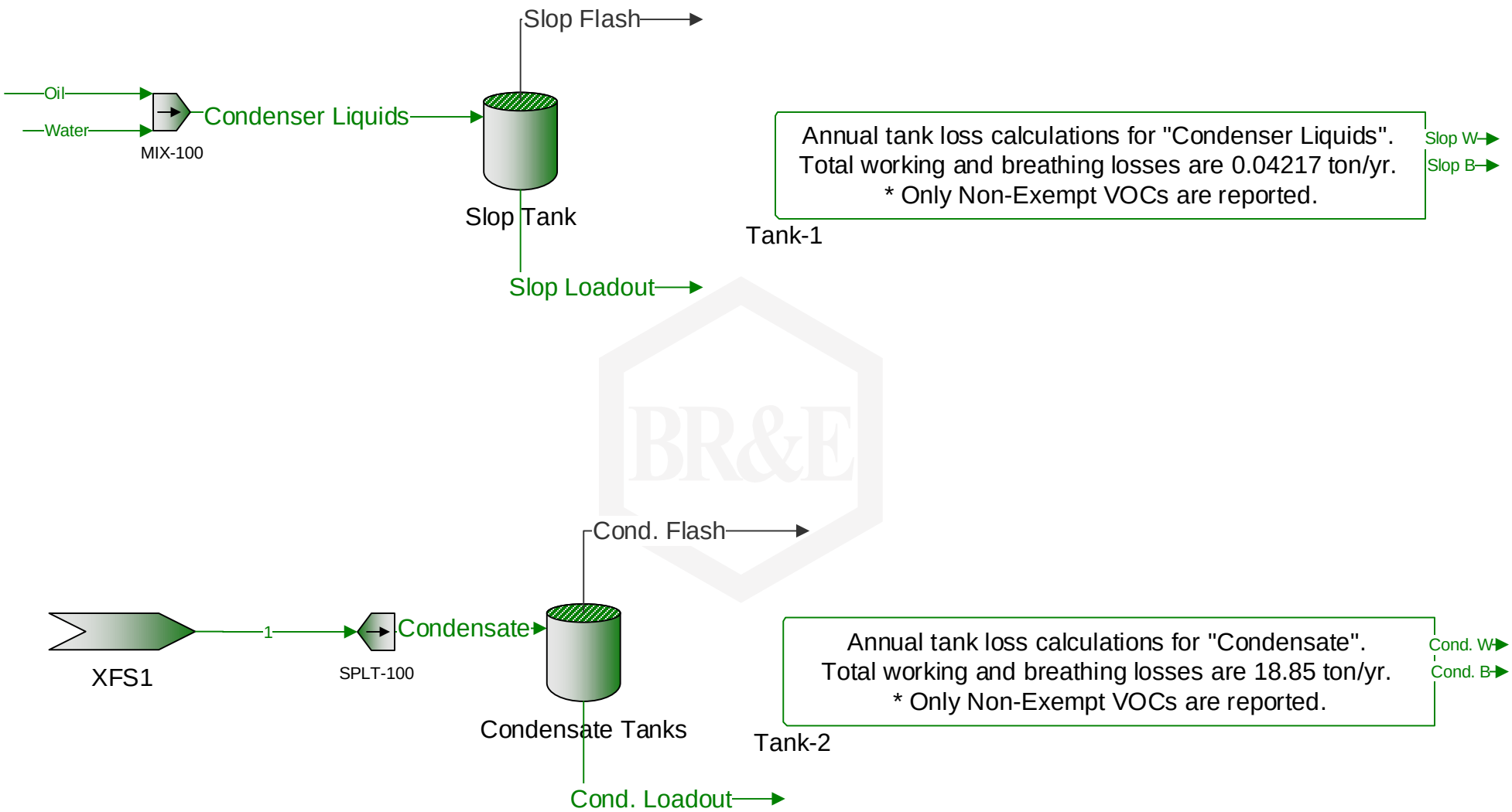
Slop Flash
Oil
Water
Condenser Liquids
MIX-100
Slop Tank
Slop Loadout
Annual tank loss calculations for "Condenser Liquids".
Total working and breathing losses are 0.04217 ton/yr.
* Only Non-Exempt VOCs are reported.
Slop W
Slop B
Tank-1
Cond. Flash
XFS1
1
SPLT-100
Condensate
Condensate Tanks
Cond. Loadout
Annual tank loss calculations for "Condensate".
Total working and breathing losses are 18.85 ton/yr.
* Only Non-Exempt VOCs are reported.
Cond. W
Cond. B
Tank-2

APPENDIX

Summary of Results
Quality Assurance/Quality Control Summary
Example Calculations
Calibration Certifications
Data Logger Files

Summary of Results

Company: Enterprise Products Operating
Location: South Carlsbad Compressor Station
Source: Solar Centaur 40 S/N: 30010096
Engine Rating: 4500hp @ 15000RPM
Technician: RAT

Test Run Number	**1**	**2**	**3**	
Unit	**2**	**2**	**2**	
Date	4/20/2010	4/20/2010	4/20/2010	
Start Time	16:12	16:36	17:02	
Stop Time	16:32	16:56	17:22	
Unit Operational Data				
Engine Speed (rpm)	15000	15000	15000	
Unit Horse Power (Hp)*	4320	4320	4320	
NPT Load (%)	90.0	90.0	90.0	
NGP Load (%)	96.0	96.0	96.0	
Compressor Suction Pressure (psig)	258	258	258	
Compressor Discharge Pressure (psig)	446	446	446	
Compressor Suction Temperature (°F)	69	69	69	
Compressor Discharge Pressure (°F)	408	408	408	
T1 Temperature (°F)	95	95	95	
T5 Temperature (°F)	1155	1155	1155	
Lube Oil Pressure (psig)	46.0	46.0	46.0	
Fuel ΔP (psid)	9.0	9.0	9.0	
PCD (psig)	95.0	95.0	95.0	
Fuel Data				
Calculated Fuel Consumption (SCFH)	34000	34000	34000	
O2 F-Factor (DSCF/MMBtu, HHV basis)	8710	8710	8710	
Fuel Heating Value (Btu/SCF, HHV basis)	1093	1093	1093	
BHp Specific Fuel Rate (Btu/Hp-hr, HHV basis)	8602	8602	8602	
BHp Specific Fuel Rate (Btu/Hp-hr, LHV basis)	7750	7750	7750	
Ambient Conditions				
Pressure Altitude (MSL)	3230	3230	3230	
Atmospheric Pressure ("Hg)	26.62	26.62	26.62	
Dry Bulb Temperature (°F)	63	65	68	
Wet Bulb Temperature (°F)	55	54	52	
Humidity (lb/lb air)	0.0084	0.0073	0.0055	
Measured Exhaust Emissions (Corrected)				**Average**
O_2 (% Vol)	16.86	16.88	16.95	**16.90**
NOx (ppmv)	73.59	74.50	75.46	**74.52**
CO (ppmv)	8.30	8.11	8.06	**8.2**
Exhaust Flow Rate (DSCFH)				
Dry SCFH (dry basis, calc. from Hp/BSFR/HHV)	1.67E+06	1.68E+06	1.71E+06	**1689983.01**
Calculated Mass Emission Rates (Based on btu Specific Fuel Rate BSFR)				
NOx (lbs/hr) {Permit Limit = 27}	14.7	14.9	15.4	**15.00**
CO (lbs/hr) {Permit Limit = 7.4}	1.0	0.9	1.0	**0.97**

*Based on gas producer speed.

Quality Assurance

Method 7E Non-Dilution Measurement System Performance Test Procedures
Method 7E Calculated Emission Gas Concentration

Project No.: 0023
Technician: RAT

Date: 04/20/10
Client: Enterprise Products Operating
Location: South Carlsbad Compressor Station

Calibration Gas Certified Values							Gas Selection, % of Span	
	Span	Low Gas	Mid Gas	High Gas	Analyzer	Analyzer Serial Number	Low (<20%)	Mid (40%-60%)
O_2 (% Vol)	20.96	0.00	11.97	20.96	AII GPR-29	001666832	0.0%	57.1%
NOx (ppmv)	98.18	0.00	50.51	98.18	TECO 42C	030400000000842	0.0%	51.4%
CO (ppmv)	100.60	0.00	50.05	100.60	TECO 48C	48C-67940-359	0.0%	49.8%

Initial Linearity Data

Calibration Error	Analyzer Calibration Response			Absolute Difference			Difference (% of Span)		
	Low	Mid	High	Low	Mid	High	Low	Mid	High
O_2 (% Vol)	0.20	12.03	20.90	0.20	0.06	0.06	0.95%	0.29%	0.29%
NOx (ppmv)	0.00	49.50	98.60	0.00	1.01	0.42	0.00%	1.03%	0.43%
CO (ppmv)	0.00	50.50	100.81	0.00	0.45	0.21	0.00%	0.45%	0.21%

Run Number 1 Start: 16:12 End: 16:32

Bias and Drift	Upscale Gas	Cal. Response		Initial Values		Initial System Bias		Final Values		Final System Bias		Drift		Emission Calculation	
		Low	Upscale	Low	Upscale	Low	Upscale	Low	Upscale	Low	Upscale	Low	Upscale	Raw Avg	Run Avg
O_2 (% Vol)	20.96	0.20	20.90	0.20	20.90	0.00%	0.00%	0.20	20.90	0.00%	0.00%	0.00%	0.00%	16.85	16.86 O_2 (% Vol)
NOx (ppmv)	50.51	0.00	49.50	0.00	50.73	0.00%	1.25%	0.00	50.65	0.00%	1.17%	0.00%	-0.08%	73.85	73.59 NOx (ppmv)
CO (ppmv)	50.05	0.00	50.50	0.00	49.98	0.00%	-0.52%	0.00	49.10	0.00%	-1.39%	0.00%	-0.87%	8.22	8.30 CO (ppmv)

Run Number 2 Start: 16:36 End: 16:56

Bias and Drift	Upscale Gas	Cal. Response		Initial Values		Initial System Bias		Final Values		Final System Bias		Drift		Emission Calculation	
		Low	Upscale	Low	Upscale	Low	Upscale	Low	Upscale	Low	Upscale	Low	Upscale	Raw Avg	Run Avg
O_2 (% Vol)	20.96	0.20	20.90	0.20	20.90	0.00%	0.00%	0.20	20.90	0.00%	0.00%	0.00%	0.00%	16.87	16.88 O_2 (% Vol)
NOx (ppmv)	50.51	0.00	49.50	0.00	50.73	0.00%	1.25%	0.00	50.65	0.00%	1.17%	0.00%	-0.08%	74.77	74.50 NOx (ppmv)
CO (ppmv)	50.05	0.00	50.50	0.00	49.98	0.00%	-0.52%	0.00	49.10	0.00%	-1.39%	0.00%	-0.87%	8.03	8.11 CO (ppmv)

Run Number 3 Start: 17:02 End: 17:22

Bias and Drift	Upscale Gas	Cal. Response		Initial Values		Initial System Bias		Final Values		Final System Bias		Drift		Emission Calculation	
		Low	Upscale	Low	Upscale	Low	Upscale	Low	Upscale	Low	Upscale	Low	Upscale	Raw Avg	Run Avg
O_2 (% Vol)	20.96	0.20	20.90	0.20	20.90	0.00%	0.00%	0.20	20.90	0.00%	0.00%	0.00%	0.00%	16.94	16.95 O_2 (% Vol)
NOx (ppmv)	50.51	0.00	49.50	0.00	50.73	0.00%	1.25%	0.00	50.65	0.00%	1.17%	0.00%	-0.08%	75.73	75.46 NOx (ppmv)
CO (ppmv)	50.05	0.00	50.50	0.00	49.98	0.00%	-0.52%	0.00	49.10	0.00%	-1.39%	0.00%	-0.87%	7.98	8.06 CO (ppmv)

Example Calculations

Drift Corrected Emission Concentrations

Formula

$$C_{GAS} = (Ç - Co) \times \frac{C_{MA}}{C_M - C_O} \quad \textit{(eq.7e-5)}$$

All Calculations Refer to Test Run 1 or an Average of Runs 1-3

$Ç_{NOx}$ =	Raw Concentration of NOx	= 73.85 ppmv	
C_O =	Avg. of Initial and Final Zero Checks	= 0.00 ppmv	
C_M =	Avg. of Initial and Final Span Checks	= 50.69 ppmv	
C_{MA} =	Certified Concentration of Span Gas	= 50.51 ppmv	
C_{NOx} =	**(73.85 - 0) x 50.51 / (50.7 - 0)**	**= 73.59 ppmv**	
$Ç_{CO}$ =	Raw Concentration of CO	= 8.22 ppmv	
C_O =	Avg. of Initial and Final Zero Checks	= 0.00 ppmv	
C_M =	Avg. of Initial and Final Span Checks	= 49.54 ppmv	
C_{MA} =	Certified Concentration of Span Gas	= 50.05 ppmv	
C_{CO} =	**(8.22 + 0) x 50.05 / (49.5 + 0)**	**= 8.30 ppmv**	
$Ç_{O2}$ =	Raw Concentration of O2	= 16.85%	
C_O =	Avg. of initial and final zero bias checks	= 0.20%	
C_M =	Avg. of initial and final span bias checks	= 20.90%	
C_{MA} =	Actual concentration of span gas	= 20.96%	
C_{O2} =	**(16.85 - 0.2) x 20.96 / (20.9 - 0.2)**	**= 16.86%**	

Example Calculations

Exhaust Calculations

Measured Data and Constants

C_{NOx} =	Corrected Concentration of NOx	=	73.59	ppmv
C_{CO} =	Corrected Concentration of CO	=	8.30	ppmv
Horsepower =	Observed Horsepower	=	4320	Hp
lb / mole =	EPA STP for Ideal Gas	=	385.15	SCF
lbs / hr to tpy =	Mass Conversion Factor	=	4.38	hrs-tons / lbs-yr
C_F =	PPMV Normalization	=	1 x e-6	1 / ppmv
MW_{NOx} =	Molecular Weight of NOx	=	46	lb / lb-mol
MW_{CO} =	Molecular Weight of CO	=	28	lb / lb-mol

S tack Gas Flow Rate via btu Specific Fuel Rate (BSFR)

Hp =	Engine Horsepower	=	4320	Hp
F_{BTU} =	btu Specific Fuel Rate	=	8602	Btu/Hp-Hr
F_{O2} =	O2 F-Factor	=	8710	DSCF/MMBtu
C_{O2} =	Measured Concentration of O2	=	16.86	%

$$Q_{S\ M19} = Hp \times F_{BTU} \times F_{O2} \times 10\text{^}6 \times \frac{20.9}{(20.9 - \%O2)}$$ DSCF/H

$$Q_{S\ M19} = 4320.00 \times 8602 \times 8710 \times \frac{20.9}{(20.9 - 16.86)} \times 1E\text{-}06$$

$Q_{S\ M19}$ = 1.67E+06 DSCF/H

Formulas

Pounds per Hour (lbs/hr) :

$$E_x\ (lb/hr) = C_x * C_F * Qs * \{ MW_x / (lb / mole) \}$$

Tons per Year (tpy) :

$$E_x\ (tpy) = E_x\ (lb/hr) * \{ 8760\ (hr / yr) / 2000\ (lb / ton) \}$$

Grams per Horsepower-hour (g/Hp-hr) :

$$E_x\ (g/hp\text{-}hr) = \{ E_x\ (lb/hr) / Hp \} / 454\ (g / lb) \}$$

Calculated Mass Emission Rates From Method 19 Exhaust Flow Rates

E_{NOx}

$$\textbf{lbs/hr} = 73.59 * 1 \text{ x e-6} * 1.67E+06 * \frac{46}{385.15} = \textbf{14.72}$$

$$\textbf{tpy} = 14.72\ lb/hr * 4.38 \frac{hrs\text{-}ton}{lbs\text{-}yr} = \textbf{64.46}$$

$$\textbf{g/Hp-hr} = \frac{14.72\ lb/hr}{4320\ Hp} * \frac{454\ g}{1\ lb} = \textbf{1.55}$$

E_{CO}

$$\textbf{lbs/hr} = 8.30 * 1 \text{ x e-6} * 1.67E+06 * \frac{28}{385.15} = \textbf{1.01}$$

$$\textbf{tpy} = 1.01\ lb/hr * 4.38 \frac{hrs\text{-}ton}{lbs\text{-}yr} = \textbf{4.43}$$

$$\textbf{g/Hp-hr} = \frac{1.01\ lb/hr}{4320\ Hp} * \frac{454\ g}{1\ lb} = \textbf{0.11}$$

Airgas

Airgas Specialty Gases
1075 Cinclare Drive
Port Allen, LA 70767
225.388.0900
FAX : 225.388.0959
www.airgas.com

CERTIFICATE OF ANALYSIS
Grade of Product: EPA Protocol

Part Number:	E03NI74E15A338	Reference Number:	83-124220680-1
Cylinder Number:	CC59336	Cylinder Volume:	149 Cu.Ft.
Laboratory:	ASG - Port Allen - LA	Cylinder Pressure:	2015 PSIG
Analysis Date:	May 25, 2010	Valve Outlet:	590

Expiration Date: May 25, 2013

Certification performed in accordance with "EPA Traceability Protocol (Sept. 1997)" using the assay procedures listed. Analytical Methodology does not require correction for analytical interferences. This cylinder has a total analytical uncertainty as stated below with a confidence level of 95%. There are no significant impurities which affect the use of this calibration mixture. All concentrations are on a volume/volume basis unless otherwise noted.
Do Not Use This Cylinder below 150 psig.i.e. 1 Mega Pascal

ANALYTICAL RESULTS

Component	Requested Concentration	Actual Concentration	Protocol Method	Total Relative Uncertainty
CARBON DIOXIDE	4.900 %	5.110 %	G1	+/- 1% NIST Traceable
OXYGEN	21.00 %	20.96 %	G1	+/- 1% NIST Traceable
NITROGEN	Balance			

CALIBRATION STANDARDS

Type	Lot ID	Cylinder No	Concentration	Expiration Date
NTRM	06060806	cc206103	22.51% OXYGEN/NITROGEN	May 01, 2016
NTRM	10060118	CC281370	5.207% CARBON DIOXIDE/NITROGEN	Nov 01, 2015

ANALYTICAL EQUIPMENT

Instrument/Make/Model	Analytical Principle	Last Multipoint Calibration
SCO2GM	NonDispersive Infrared	Apr 29, 2010
HO2GH	PMO2	Apr 29, 2010

Triad Data Available Upon Request

Notes:

Approved for Release

CERTIFICATE OF ANALYSIS
Grade of Product: EPA Protocol

Part Number:	E03NI76E15A0295	Reference Number:	83-124237642-1
Cylinder Number:	CC318799	Cylinder Volume:	153 Cu.Ft.
Laboratory:	ASG - Port Allen - LA	Cylinder Pressure:	2015 PSIG
Analysis Date:	Oct 15, 2010	Valve Outlet:	590

Expiration Date: Oct 15, 2013

Certification performed in accordance with "EPA Traceability Protocol (Sept. 1997)" using the assay procedures listed. Analytical Methodology does not require correction for analytical interferences. This cylinder has a total analytical uncertainty as stated below with a confidence level of 95%. There are no significant impurities which affect the use of this calibration mixture. All concentrations are on a volume/volume basis unless otherwise noted.
Do Not Use This Cylinder below 150 psig.i.e. 1 Mega Pascal

ANALYTICAL RESULTS

Component	Requested Concentration	Actual Concentration	Protocol Method	Total Relative Uncertainty
CARBON DIOXIDE	12.00 %	11.98 %	G1	+/- 1% NIST Traceable
OXYGEN	12.00 %	11.97 %	G1	+/- 1% NIST Traceable
NITROGEN	Balance			

CALIBRATION STANDARDS

Type	Lot ID	Cylinder No	Concentration	Expiration Date
NTRM	00040210	CC108973	10.00% OXYGEN/NITROGEN	Oct 02, 2011
NTRM	09060612	CC262107	9.921% CARBON DIOXIDE/NITROGEN	Apr 10, 2013

ANALYTICAL EQUIPMENT

Instrument/Make/Model	Analytical Principle	Last Multipoint Calibration
SCO2GM	NonDispersive Infrared	Sep 24, 2010
HO2GH	PMO2	Sep 16, 2010

Triad Data Available Upon Request

Notes:

Signature on file

QA Approval

Airgas

CERTIFICATE OF ANALYSIS
Grade of Product: EPA Protocol

Airgas Specialty Gases
1075 Cinclare Drive
Port Allen, LA 70767
225.388.0900
FAX: 225.388.0959
www.airgas.com

Part Number:	E04NI99E15A3530	Reference Number:	83-124198943-4
Cylinder Number:	CC265550	Cylinder Volume:	144 Cu.Ft.
Laboratory:	ASG - Port Allen - LA	Cylinder Pressure:	2015 PSIG
Analysis Date:	Dec 02, 2009	Valve Outlet:	660

Expiration Date: Dec 02, 2011

Certification performed in accordance with "EPA Traceability Protocol (Sept. 1997)" using the assay procedures listed. Analytical Methodology does not require correction for analytical interferences. This cylinder has a total analytical uncertainty as stated below with a confidence level of 95%. There are no significant impurities which affect the use of this calibration mixture. All concentrations are on a volume/volume basis unless otherwise noted.
Do Not Use This Cylinder below 150 psig.i.e. 1 Mega Pascal

ANALYTICAL RESULTS

Component	Requested Concentration	Actual Concentration	Protocol Method	Total Relative Uncertainty
PROPANE	90.00 PPM	90.89 PPM	G1	+/- 1% NIST Traceable
CARBON MONOXIDE	100.0 PPM	100.6 PPM	G1	+/- 1% NIST Traceable
NITRIC OXIDE	100.0 PPM	97.37 PPM	G1	+/- 1% NIST Traceable
NITROGEN	Balance			
Total oxides of nitrogen		98.18 PPM		For Reference Only

CALIBRATION STANDARDS

Type	Lot ID	Cylinder No	Concentration	Expiration Date
NTRM	06060325	CC207559	490PPM NITRIC OXIDE/NITROGEN	Jan 01, 2010
NTRM	08060207	CC255258	51.26PPM CARBON MONOXIDE/NITROGEN	Jan 15, 2012
NTRM	000520	SG9105901BAL	50.5PPM PROPANE/NITROGEN	Apr 03, 2010
NTRM	06060241	CC207849	257.0PPM NITRIC OXIDE/NITROGEN	Jan 01, 2010

ANALYTICAL EQUIPMENT

Instrument/Make/Model	Analytical Principle	Last Multipoint Calibration
FTIR2MCO	FTIR	Nov 11, 2009
FTIR2MNO	FTIR	Nov 04, 2009
FTIR2PROPANE (50-500 ppm)	FTIR	Oct 29, 2009

Triad Data Available Upon Request

Notes:

QA Approval

Airgas

Airgas Specialty Gases
1075 Cinclare Drive
Port Allen, LA 70767
225.388.0900
FAX: 225.388.0959
www.airgas.com

CERTIFICATE OF ANALYSIS
Grade of Product: EPA Protocol

Part Number:	E04NI99E15A3528	Reference Number:	83-124198943-3
Cylinder Number:	SG9135772BAL	Cylinder Volume:	144 Cu.Ft.
Laboratory:	ASG - Port Allen - LA	Cylinder Pressure:	2015 PSIG
Analysis Date:	Dec 02, 2009	Valve Outlet:	660

Expiration Date: Dec 02, 2011

Certification performed in accordance with "EPA Traceability Protocol (Sept. 1997)" using the assay procedures listed. Analytical Methodology does not require correction for analytical interferences. This cylinder has a total analytical uncertainty as stated below with a confidence level of 95%. There are no significant impurities which affect the use of this calibration mixture. All concentrations are on a volume/volume basis unless otherwise noted.
Do Not Use This Cylinder below 150 psig.i.e. 1 Mega Pascal

ANALYTICAL RESULTS

Component	Requested Concentration	Actual Concentration	Protocol Method	Total Relative Uncertainty
PROPANE	45.00 PPM	44.07 PPM	G1	+/- 1% NIST Traceable
CARBON MONOXIDE	50.00 PPM	50.05 PPM	G1	+/- 1% NIST Traceable
NITRIC OXIDE	50.00 PPM	50.50 PPM	G1	+/- 1% NIST Traceable
NITROGEN	Balance			
Total oxides of nitrogen		50.51 PPM		For Reference Only

CALIBRATION STANDARDS

Type	Lot ID	Cylinder No	Concentration	Expiration Date
NTRM	060610	CC206050	49.38PPM NITRIC OXIDE/NITROGEN	Oct 02, 2012
NTRM	08060207	CC255258	51.26PPM CARBON MONOXIDE/NITROGEN	Jan 15, 2012
NTRM	99060203	CC263030	49.62PPM PROPANE/NITROGEN	Jul 08, 2012

ANALYTICAL EQUIPMENT

Instrument/Make/Model	Analytical Principle	Last Multipoint Calibration
FTIR2MCO	FTIR	Nov 11, 2009
FTIR2LNO	FTIR	Nov 10, 2009
FTIR2PROPANE (10-50 PPM)	FTIR	Oct 29, 2009

Triad Data Available Upon Request

Notes:

QA Approval

Project Number	Client	Source	Run Number	Date	Time	O2 (% Vol)	NOx (ppmv)	CO (ppmv)
0116	Enterprise Products			6/22/2011	9:04:05 AM	17.70	0.00	0.00
0116	Enterprise Products			6/22/2011	9:05:05 AM	17.68	0.00	0.00
0116	Enterprise Products			6/22/2011	9:06:05 AM	17.68	0.00	0.00
0116	Enterprise Products			6/22/2011	9:07:05 AM	17.68	0.00	0.00
0116	Enterprise Products			6/22/2011	9:08:05 AM	17.68	0.00	0.00
0116	Enterprise Products			6/22/2011	9:09:05 AM	17.68	0.00	0.00
0116	Enterprise Products			6/22/2011	9:10:05 AM	17.68	0.00	0.00
0116	Enterprise Products			6/22/2011	9:10:38 AM	17.68	0.00	0.00
0116	Enterprise Products			6/22/2011	9:11:08 AM	17.63	0.00	0.00
0116	Enterprise Products			6/22/2011	9:11:38 AM	17.65	0.00	0.00
0116	Enterprise Products			6/22/2011	9:12:08 AM	1.20	0.00	0.00
0116	Enterprise Products			6/22/2011	9:12:38 AM	0.68	0.00	0.00
0116	Enterprise Products			6/22/2011	9:13:08 AM	0.20	0.00	0.00
0116	Enterprise Products			6/22/2011	9:13:38 AM	0.20	0.00	0.00
0116	Enterprise Products			6/22/2011	9:14:08 AM	0.20	0.00	0.00
0116	Enterprise Products			6/22/2011	9:14:38 AM	0.20	0.00	0.00
0116	Enterprise Products			6/22/2011	9:15:08 AM	0.20	0.00	0.00
0116	Enterprise Products			6/22/2011	9:15:38 AM	0.20	0.00	0.00
0116	Enterprise Products			6/22/2011	9:16:08 AM	0.20	0.00	0.00
0116	Enterprise Products			6/22/2011	9:16:38 AM	0.20	0.00	0.00
0116	Enterprise Products			6/22/2011	9:17:08 AM	0.20	0.00	0.00
0116	Enterprise Products			6/22/2011	9:17:34

0116	Enterprise Products			6/22/2011	9:17:34 AM	0.20	0.00	0.00
0116	Enterprise Products			6/22/2011	9:17:34 AM	0.20	0.00	0.00
0116	Enterprise Products			6/22/2011	9:17:34 AM	0.20	0.00	0.00
0116	Enterprise Products			6/22/2011	9:17:34 AM	0.20	0.00	0.00
0116	Enterprise Products			6/22/2011	9:17:34 AM	0.20	0.00	0.00
0116	Enterprise Products			6/22/2011	9:17:34 AM	0.20	0.00	0.00
0116	Enterprise Products			6/22/2011	9:17:34 AM	0.20	0.00	0.00
0116	Enterprise Products			6/22/2011	9:17:34 AM	0.20	0.00	0.00
0116	Enterprise Products			6/22/2011	9:17:34 AM	0.20	0.00	0.00
0116	Enterprise Products			6/22/2011	9:17:34 AM	0.20	0.00	0.00
0116	Enterprise Products			6/22/2011	9:17:34 AM	0.20	0.00	0.00
0116	Enterprise Products			6/22/2011	9:17:34 AM	0.20	0.00	0.00
0116	Enterprise Products			6/22/2011	9:17:34 AM	0.20	0.00	0.00
0116	Enterprise Products			6/22/2011	9:17:34 AM	0.20	0.00	0.00
0116	Enterprise Products			6/22/2011	9:17:34 AM	0.20	0.00	0.00
0116	Enterprise Products			6/22/2011	9:17:34 AM	0.20	0.00	0.00
0116	Enterprise Products			6/22/2011	9:17:34 AM	0.20	0.00	0.00
0116	Enterprise Products			6/22/2011	9:17:34 AM	0.20	0.00	0.00
0116	Enterprise Products			6/22/2011	9:17:34 AM	0.20	0.00	0.00
0116	Enterprise Products			6/22/2011	9:17:34 AM	0.20	0.00	0.00
0116	Enterprise Products			6/22/2011	9:17:34 AM	0.20	0.00	0.00
0116	Enterprise Products			6/22/2011	9:17:34 AM	0.20	0.00	0.00
0116	Enterprise Products			6/22/2011	9:17:34 AM	0.20	0.00	0.00
0116	Enterprise Products			6/22/2011	9:17:34 AM	0.20	0.00	0.00
0116	Enterprise Products			6/22/2011	9:17:34 AM	0.20	38.21	45.87
0116	Enterprise Products			6/22/2011	9:17:34 AM	0.20	49.80	50.70
0116	Enterprise Products			6/22/2011	9:17:34 AM	0.20	49.90	50.80
0116	Enterprise Products			6/22/2011	9:17:34 AM	0.20	49.90	50.80
0116	Enterprise Products			6/22/2011	9:17:34 AM	0.20	49.90	50.80
0116	Enterprise Products			6/22/2011	9:17:34 AM	0.20	49.90	50.80
0116	Enterprise Products			6/22/2011	9:17:34 AM	19.10	3.75	1.31
0116	Enterprise Products			6/22/2011	9:17:34 AM	20.90	0.00	0.00
0116	Enterprise Products			6/22/2011	9:17:34 AM	20.90	0.00	0.00
0116	Enterprise Products			6/22/2011	9:17:34 AM	20.90	0.00	0.00
0116	Enterprise Products			6/22/2011	9:17:34 AM	20.90	0.00	0.00
0116	Enterprise Products			6/22/2011	9:17:34 AM	14.23	1.17	1.23
0116	Enterprise Products			6/22/2011	9:17:34 AM	14.90	61.22	6.47
0116	Enterprise Products			6/22/2011	9:17:34 AM	15.25	72.33	7.23
0116	Enterprise Products			6/22/2011	9:17:34 AM	15.50	73.23	7.23
0116	Enterprise Products			6/22/2011	9:17:34 AM	15.70	73.83	7.23
0116	Enterprise Products			6/22/2011	9:17:34 AM	15.90	73.98	7.23
0116	Enterprise Products			6/22/2011	10:03:08 AM	16.05	74.28	7.23
0116	Enterprise Products			6/22/2011	10:03:17 AM	16.08	74.13	7.23
0116	Enterprise Products			6/22/2011	10:03:29 AM	16.13	74.13	7.22
0116	Enterprise Products	South Carlsbad Turbine #1	Run 1	6/22/2011	10:03:59 AM	16.25	74.28	7.07
0116	Enterprise Products	South Carlsbad Turbine #1	Run 1	6/22/2011	10:04:29 AM	16.33	74.13	7.23
0116	Enterprise Products	South Carlsbad Turbine #1	Run 1	6/22/2011	10:04:59 AM	16.38	74.43	7.23
0116	Enterprise Products	South Carlsbad Turbine #1	Run 1	6/22/2011	10:05:29 AM	16.43	74.13	7.07
0116	Enterprise Products	South Carlsbad Turbine #1	Run 1	6/22/2011	10:05:59 AM	16.48	74.28	7.23
0116	Enterprise Products	South Carlsbad Turbine #1	Run 1	6/22/2011	10:06:29 AM	16.50	73.83	7.23
0116	Enterprise Products	South Carlsbad Turbine #1	Run 1	6/22/2011	10:06:59 AM	16.53	73.83	7.23
0116	Enterprise Products	South Carlsbad Turbine #1	Run 1	6/22/2011	10:07:29 AM	16.53	74.13	7.23
0116	Enterprise Products	South Carlsbad Turbine #1	Run 1	6/22/2011	10:07:59 AM	16.55	74.13	7.22
0116	Enterprise Products	South Carlsbad Turbine #1	Run 1	6/22/2011	10:08:29 AM	16.55	74.28	7.23
0116	Enterprise Products	South Carlsbad Turbine #1	Run 1	6/22/2011	10:08:59 AM	16.58	74.43	7.23
0116	Enterprise Products	South Carlsbad Turbine #1	Run 1	6/22/2011	10:09:29 AM	16.58	74.43	7.22
0116	Enterprise Products	South Carlsbad Turbine #1	Run 1	6/22/2011	10:09:59 AM	16.58	74.43	7.23
0116	Enterprise Products	South Carlsbad Turbine #1	Run 1	6/22/2011	10:10:29 AM	16.60	75.03	7.23
0116	Enterprise Products	South Carlsbad Turbine #1	Run 1	6/22/2011	10:10:59 AM	16.60	75.03	7.23
0116	Enterprise Products	South Carlsbad Turbine #1	Run 1	6/22/2011	10:11:29 AM	16.60	75.03	7.07
0116	Enterprise Products	South Carlsbad Turbine #1	Run 1	6/22/2011	10:11:59 AM	16.60	74.43	7.23
0116	Enterprise Products	South Carlsbad Turbine #1	Run 1	6/22/2011	10:12:29 AM	16.60	74.73	7.23
0116	Enterprise Products	South Carlsbad Turbine #1	Run 1	6/22/2011	10:12:59 AM	16.60	74.43	7.23
0116	Enterprise Products	South Carlsbad Turbine #1	Run 1	6/22/2011	10:13:29 AM	16.60	74.73	7.22
0116	Enterprise Products	South Carlsbad Turbine #1	Run 1	6/22/2011	10:13:59 AM	16.60	74.28	7.07
0116	Enterprise Products	South Carlsbad Turbine #1	Run 1	6/22/2011	10:14:29 AM	16.60	74.58	7.07
0116	Enterprise Products	South Carlsbad Turbine #1	Run 1	6/22/2011	10:14:59 AM	16.60	74.28	7.07
0116	Enterprise Products	South Carlsbad Turbine #1	Run 1	6/22/2011	10:15:29 AM	16.60	74.73	7.07
0116	Enterprise Products	South Carlsbad Turbine #1	Run 1	6/22/2011	10:15:59 AM	16.63	74.13	7.07
0116	Enterprise Products	South Carlsbad Turbine #1	Run 1	6/22/2011	10:16:29 AM	16.60	74.43	7.07
0116	Enterprise Products	South Carlsbad Turbine #1	Run 1	6/22/2011	10:16:59 AM	16.60	74.28	7.23
0116	Enterprise Products	South Carlsbad Turbine #1	Run 1	6/22/2011	10:17:29 AM	16.60	74.28	7.07
0116	Enterprise Products	South Carlsbad Turbine #1	Run 1	6/22/2011	10:17:59 AM	16.60	74.13	7.07
0116	Enterprise Products	South Carlsbad Turbine #1	Run 1	6/22/2011	10:18:29 AM	16.63	73.98	7.07

0116	Enterprise Products	South Carlsbad Turbine #1	Run 1	6/22/2011	10:18:59 AM	16.63	73.98	7.07
0116	Enterprise Products	South Carlsbad Turbine #1	Run 1	6/22/2011	10:19:29 AM	16.63	73.98	7.07
0116	Enterprise Products	South Carlsbad Turbine #1	Run 1	6/22/2011	10:19:59 AM	16.63	73.98	7.07
0116	Enterprise Products	South Carlsbad Turbine #1	Run 1	6/22/2011	10:20:29 AM	16.63	73.98	7.07
0116	Enterprise Products	South Carlsbad Turbine #1	Run 1	6/22/2011	10:20:59 AM	16.63	73.98	7.07
0116	Enterprise Products	South Carlsbad Turbine #1	Run 1	6/22/2011	10:21:29 AM	16.63	73.83	7.07
0116	Enterprise Products	South Carlsbad Turbine #1	Run 1	6/22/2011	10:21:59 AM	16.63	73.83	7.07
0116	Enterprise Products	South Carlsbad Turbine #1	Run 1	6/22/2011	10:22:29 AM	16.63	73.83	7.07
0116	Enterprise Products	South Carlsbad Turbine #1	Run 1	6/22/2011	10:22:59 AM	16.63	73.98	7.07
0116	Enterprise Products	South Carlsbad Turbine #1	Run 1	6/22/2011	10:23:29 AM	16.63	73.83	7.07
		Averages				16.56	74.26	7.14
0116	Enterprise Products	South Carlsbad Turbine #1		6/22/2011	10:23:59 AM	16.63	73.98	6.93
0116	Enterprise Products	South Carlsbad Turbine #1		6/22/2011	10:24:29 AM	16.63	73.98	7.07
0116	Enterprise Products	South Carlsbad Turbine #1		6/22/2011	10:24:59 AM	16.60	74.13	7.07
0116	Enterprise Products	South Carlsbad Turbine #1		6/22/2011	10:25:29 AM	16.63	73.98	7.07
0116	Enterprise Products	South Carlsbad Turbine #1	Run 2	6/22/2011	10:25:59 AM	16.63	74.13	7.08
0116	Enterprise Products	South Carlsbad Turbine #1	Run 2	6/22/2011	10:26:29 AM	16.63	73.98	7.07
0116	Enterprise Products	South Carlsbad Turbine #1	Run 2	6/22/2011	10:26:59 AM	16.60	74.43	7.07
0116	Enterprise Products	South Carlsbad Turbine #1	Run 2	6/22/2011	10:27:29 AM	16.63	74.13	7.23
0116	Enterprise Products	South Carlsbad Turbine #1	Run 2	6/22/2011	10:27:59 AM	16.63	74.28	7.07
0116	Enterprise Products	South Carlsbad Turbine #1	Run 2	6/22/2011	10:28:29 AM	16.63	74.13	7.07
0116	Enterprise Products	South Carlsbad Turbine #1	Run 2	6/22/2011	10:28:59 AM	16.63	74.43	7.07
0116	Enterprise Products	South Carlsbad Turbine #1	Run 2	6/22/2011	10:29:29 AM	16.63	74.28	7.07
0116	Enterprise Products	South Carlsbad Turbine #1	Run 2	6/22/2011	10:29:59 AM	16.60	74.58	7.07
0116	Enterprise Products	South Carlsbad Turbine #1	Run 2	6/22/2011	10:30:29 AM	16.63	74.28	6.92
0116	Enterprise Products	South Carlsbad Turbine #1	Run 2	6/22/2011	10:30:59 AM	16.63	74.58	7.07
0116	Enterprise Products	South Carlsbad Turbine #1	Run 2	6/22/2011	10:31:29 AM	16.63	74.43	7.23
0116	Enterprise Products	South Carlsbad Turbine #1	Run 2	6/22/2011	10:31:59 AM	16.63	74.58	7.07
0116	Enterprise Products	South Carlsbad Turbine #1	Run 2	6/22/2011	10:32:29 AM	16.63	74.58	7.07
0116	Enterprise Products	South Carlsbad Turbine #1	Run 2	6/22/2011	10:32:59 AM	16.63	74.73	7.07
0116	Enterprise Products	South Carlsbad Turbine #1	Run 2	6/22/2011	10:33:29 AM	16.60	74.88	6.92
0116	Enterprise Products	South Carlsbad Turbine #1	Run 2	6/22/2011	10:33:59 AM	16.63	74.88	7.07
0116	Enterprise Products	South Carlsbad Turbine #1	Run 2	6/22/2011	10:34:29 AM	16.63	74.88	6.92
0116	Enterprise Products	South Carlsbad Turbine #1	Run 2	6/22/2011	10:34:59 AM	16.63	74.73	6.93
0116	Enterprise Products	South Carlsbad Turbine #1	Run 2	6/22/2011	10:35:29 AM	16.63	74.73	7.07
0116	Enterprise Products	South Carlsbad Turbine #1	Run 2	6/22/2011	10:35:59 AM	16.63	74.58	7.07
0116	Enterprise Products	South Carlsbad Turbine #1	Run 2	6/22/2011	10:36:29 AM	16.63	74.73	7.07
0116	Enterprise Products	South Carlsbad Turbine #1	Run 2	6/22/2011	10:36:59 AM	16.63	74.43	7.07
0116	Enterprise Products	South Carlsbad Turbine #1	Run 2	6/22/2011	10:37:29 AM	16.63	74.88	7.07
0116	Enterprise Products	South Carlsbad Turbine #1	Run 2	6/22/2011	10:37:59 AM	16.63	74.58	7.07
0116	Enterprise Products	South Carlsbad Turbine #1	Run 2	6/22/2011	10:38:29 AM	16.63	74.88	6.93
0116	Enterprise Products	South Carlsbad Turbine #1	Run 2	6/22/2011	10:38:59 AM	16.63	74.73	7.07
0116	Enterprise Products	South Carlsbad Turbine #1	Run 2	6/22/2011	10:39:29 AM	16.65	74.88	6.93
0116	Enterprise Products	South Carlsbad Turbine #1	Run 2	6/22/2011	10:39:59 AM	16.63	74.73	7.07
0116	Enterprise Products	South Carlsbad Turbine #1	Run 2	6/22/2011	10:40:29 AM	16.65	74.73	7.07
0116	Enterprise Products	South Carlsbad Turbine #1	Run 2	6/22/2011	10:40:59 AM	16.63	74.88	7.07
0116	Enterprise Products	South Carlsbad Turbine #1	Run 2	6/22/2011	10:41:29 AM	16.65	74.58	7.07
0116	Enterprise Products	South Carlsbad Turbine #1	Run 2	6/22/2011	10:41:59 AM	16.65	74.58	7.07
0116	Enterprise Products	South Carlsbad Turbine #1	Run 2	6/22/2011	10:42:29 AM	16.65	74.58	7.07
0116	Enterprise Products	South Carlsbad Turbine #1	Run 2	6/22/2011	10:42:59 AM	16.65	74.73	8.72
0116	Enterprise Products	South Carlsbad Turbine #1	Run 2	6/22/2011	10:43:29 AM	16.68	74.73	7.37
0116	Enterprise Products	South Carlsbad Turbine #1	Run 2	6/22/2011	10:43:59 AM	16.65	74.73	7.07
0116	Enterprise Products	South Carlsbad Turbine #1	Run 2	6/22/2011	10:44:29 AM	16.65	74.58	6.93
0116	Enterprise Products	South Carlsbad Turbine #1	Run 2	6/22/2011	10:44:59 AM	16.68	74.73	7.07
0116	Enterprise Products	South Carlsbad Turbine #1	Run 2	6/22/2011	10:45:29 AM	16.68	74.58	7.07
		Averages				16.63	74.57	7.10
0116	Enterprise Products	South Carlsbad Turbine #1		6/22/2011	10:45:59 AM	16.68	74.58	7.07
0116	Enterprise Products	South Carlsbad Turbine #1		6/22/2011	10:46:29 AM	16.68	74.58	7.07
0116	Enterprise Products	South Carlsbad Turbine #1		6/22/2011	10:46:59 AM	16.68	74.88	7.07
0116	Enterprise Products	South Carlsbad Turbine #1		6/22/2011	10:47:29 AM	16.68	74.73	6.93
0116	Enterprise Products	South Carlsbad Turbine #1	Run 3	6/22/2011	10:47:59 AM	16.68	75.03	7.07
0116	Enterprise Products	South Carlsbad Turbine #1	Run 3	6/22/2011	10:48:29 AM	16.70	74.88	7.07
0116	Enterprise Products	South Carlsbad Turbine #1	Run 3	6/22/2011	10:48:59 AM	16.68	74.88	6.93
0116	Enterprise Products	South Carlsbad Turbine #1	Run 3	6/22/2011	10:49:29 AM	16.70	75.03	7.07
0116	Enterprise Products	South Carlsbad Turbine #1	Run 3	6/22/2011	10:49:59 AM	16.70	74.88	7.07
0116	Enterprise Products	South Carlsbad Turbine #1	Run 3	6/22/2011	10:50:29 AM	16.70	74.88	7.07
0116	Enterprise Products	South Carlsbad Turbine #1	Run 3	6/22/2011	10:50:59 AM	16.70	74.58	7.07
0116	Enterprise Products	South Carlsbad Turbine #1	Run 3	6/22/2011	10:51:29 AM	16.70	75.03	7.07
0116	Enterprise Products	South Carlsbad Turbine #1	Run 3	6/22/2011	10:51:59 AM	16.70	74.88	7.07
0116	Enterprise Products	South Carlsbad Turbine #1	Run 3	6/22/2011	10:52:29 AM	16.70	75.48	7.07
0116	Enterprise Products	South Carlsbad Turbine #1	Run 3	6/22/2011	10:52:59 AM	16.70	75.33	7.07
0116	Enterprise Products	South Carlsbad Turbine #1	Run 3	6/22/2011	10:53:29 AM	16.70	75.48	7.07
0116	Enterprise Products	South Carlsbad Turbine #1	Run 3	6/22/2011	10:53:59 AM	16.70	75.33	7.07

0116	Enterprise Products	South Carlsbad Turbine #1	Run 3	6/22/2011	10:54:29 AM	16.70	75.33	7.07
0116	Enterprise Products	South Carlsbad Turbine #1	Run 3	6/22/2011	10:54:59 AM	16.70	75.63	7.07
0116	Enterprise Products	South Carlsbad Turbine #1	Run 3	6/22/2011	10:55:29 AM	16.70	75.48	7.07
0116	Enterprise Products	South Carlsbad Turbine #1	Run 3	6/22/2011	10:55:59 AM	16.70	75.93	7.07
0116	Enterprise Products	South Carlsbad Turbine #1	Run 3	6/22/2011	10:56:29 AM	16.70	75.78	7.07
0116	Enterprise Products	South Carlsbad Turbine #1	Run 3	6/22/2011	10:56:59 AM	16.70	76.08	7.07
0116	Enterprise Products	South Carlsbad Turbine #1	Run 3	6/22/2011	10:57:29 AM	16.70	75.78	7.07
0116	Enterprise Products	South Carlsbad Turbine #1	Run 3	6/22/2011	10:57:59 AM	16.70	76.08	7.07
0116	Enterprise Products	South Carlsbad Turbine #1	Run 3	6/22/2011	10:58:29 AM	16.70	76.08	7.07
0116	Enterprise Products	South Carlsbad Turbine #1	Run 3	6/22/2011	10:58:59 AM	16.70	75.93	7.07
0116	Enterprise Products	South Carlsbad Turbine #1	Run 3	6/22/2011	10:59:29 AM	16.70	76.23	7.07
0116	Enterprise Products	South Carlsbad Turbine #1	Run 3	6/22/2011	10:59:59 AM	16.70	75.78	7.07
0116	Enterprise Products	South Carlsbad Turbine #1	Run 3	6/22/2011	11:00:29 AM	16.70	76.08	7.07
0116	Enterprise Products	South Carlsbad Turbine #1	Run 3	6/22/2011	11:00:59 AM	16.70	76.08	7.07
0116	Enterprise Products	South Carlsbad Turbine #1	Run 3	6/22/2011	11:01:29 AM	16.70	76.08	7.07
0116	Enterprise Products	South Carlsbad Turbine #1	Run 3	6/22/2011	11:01:59 AM	16.70	76.38	7.07
0116	Enterprise Products	South Carlsbad Turbine #1	Run 3	6/22/2011	11:02:29 AM	16.70	76.23	7.07
0116	Enterprise Products	South Carlsbad Turbine #1	Run 3	6/22/2011	11:02:59 AM	16.70	76.08	7.07
0116	Enterprise Products	South Carlsbad Turbine #1	Run 3	6/22/2011	11:03:29 AM	16.70	76.08	7.07
0116	Enterprise Products	South Carlsbad Turbine #1	Run 3	6/22/2011	11:03:59 AM	16.70	76.38	7.07
0116	Enterprise Products	South Carlsbad Turbine #1	Run 3	6/22/2011	11:04:29 AM	16.68	76.23	7.07
0116	Enterprise Products	South Carlsbad Turbine #1	Run 3	6/22/2011	11:04:59 AM	16.70	76.38	7.07
0116	Enterprise Products	South Carlsbad Turbine #1	Run 3	6/22/2011	11:05:29 AM	16.68	76.38	7.07
0116	Enterprise Products	South Carlsbad Turbine #1	Run 3	6/22/2011	11:05:59 AM	16.70	76.23	7.07
0116	Enterprise Products	South Carlsbad Turbine #1	Run 3	6/22/2011	11:06:29 AM	16.70	76.38	7.23
0116	Enterprise Products	South Carlsbad Turbine #1	Run 3	6/22/2011	11:06:59 AM	16.70	76.08	7.07
0116	Enterprise Products	South Carlsbad Turbine #1	Run 3	6/22/2011	11:07:29 AM	16.70	76.38	7.07
		Averages				16.70	75.71	7.06
0116	Enterprise Products	South Carlsbad Turbine #1		6/22/2011	11:07:59 AM	16.70	76.08	7.07
0116	Enterprise Products	South Carlsbad Turbine #1		6/22/2011	11:08:29 AM	16.70	75.93	7.23
0116	Enterprise Products	South Carlsbad Turbine #1		6/22/2011	11:08:59 AM	1.68	75.63	7.23
0116	Enterprise Products	South Carlsbad Turbine #1		6/22/2011	11:09:29 AM	0.20	55.33	45.77
0116	Enterprise Products	South Carlsbad Turbine #1		6/22/2011	11:09:59 AM	0.20	50..73	49.98
0116	Enterprise Products	South Carlsbad Turbine #1		6/22/2011	11:10:29 AM	0.20	50.73	49.98
0116	Enterprise Products	South Carlsbad Turbine #1		6/22/2011	11:10:59 AM	0.20	50.73	49.98
0116	Enterprise Products	South Carlsbad Turbine #1		6/22/2011	11:11:29 AM	19.98	4.43	1.77
0116	Enterprise Products	South Carlsbad Turbine #1		6/22/2011	11:11:59 AM	20.90	0.00	0.00
0116	Enterprise Products	South Carlsbad Turbine #1		6/22/2011	11:12:29 AM	20.90	0.00	0.00
0116	Enterprise Products	South Carlsbad Turbine #1		6/22/2011	11:12:59 AM	20.90	0.00	0.00
0116	Enterprise Products	South Carlsbad Turbine #1		6/22/2011	11:13:29 AM	16.68	73.98	6.17
0116	Enterprise Products	South Carlsbad Turbine #1		6/22/2011	11:13:59 AM	16.73	73.53	5.73
0116	Enterprise Products	South Carlsbad Turbine #1		6/22/2011	11:14:29 AM	16.73	72.18	5.73
0116	Enterprise Products	South Carlsbad Turbine #1		6/22/2011	11:14:59 AM	16.70	71.43	4.38
0116	Enterprise Products	South Carlsbad Turbine #1		6/22/2011	11:15:29 AM	16.70	70.98	2.13
0116	Enterprise Products	South Carlsbad Turbine #1		6/22/2011	11:15:59 AM	16.73	50.57	1.23
0116	Enterprise Products	South Carlsbad Turbine #1		6/22/2011	11:16:29 AM	16.75	27.45	0.63
0116	Enterprise Products	South Carlsbad Turbine #1		6/22/2011	11:16:59 AM	17.10	15.74	0.33
0116	Enterprise Products	South Carlsbad Turbine #1		6/22/2011	11:17:29 AM	17.93	10.49	0.33
0116	Enterprise Products	South Carlsbad Turbine #1		6/22/2011	11:17:59 AM	18.68	7.34	0.33
0116	Enterprise Products	South Carlsbad Turbine #1		6/22/2011	11:18:29 AM	19.23	5.69	0.18
0116	Enterprise Products	South Carlsbad Turbine #1		6/22/2011	11:18:59 AM	19.63	4.79	0.18
0116	Enterprise Products	South Carlsbad Turbine #1		6/22/2011	11:19:29 AM	19.90	4.34	0.18
0116	Enterprise Products	South Carlsbad Turbine #1		6/22/2011	11:19:59 AM	20.08	4.04	0.33
0116	Enterprise Products	South Carlsbad Turbine #1		6/22/2011	11:20:29 AM	20.10	4.04	0.48
0116	Enterprise Products	South Carlsbad Turbine #1		6/22/2011	11:20:59 AM	20.20	4.34	0.18
0116	Enterprise Products	South Carlsbad Turbine #1		6/22/2011	11:21:29 AM	20.28	4.04	0.17
0116	Enterprise Products	South Carlsbad Turbine #1		6/22/2011	11:21:59 AM	20.33	3.59	2.88
0116	Enterprise Products	South Carlsbad Turbine #1		6/22/2011	11:22:29 AM	20.38	3.29	5.87
0116	Enterprise Products	South Carlsbad Turbine #2		6/22/2011	11:22:54 AM	20.40	17.24	6.17
0116	Enterprise Products	South Carlsbad Turbine #2		6/22/2011	11:23:24 AM	17.10	56.12	8.12
0116	Enterprise Products	South Carlsbad Turbine #2		6/22/2011	11:23:54 AM	16.93	71.73	8.12
0116	Enterprise Products	South Carlsbad Turbine #2		6/22/2011	11:24:17 AM	16.90	73.98	8.12
0116	Enterprise Products	South Carlsbad Turbine #2	Run 1	6/22/2011	11:24:47 AM	16.88	74.13	8.42
0116	Enterprise Products	South Carlsbad Turbine #2	Run 1	6/22/2011	11:25:17 AM	16.88	74.28	8.27
0116	Enterprise Products	South Carlsbad Turbine #2	Run 1	6/22/2011	11:25:47 AM	16.85	73.98	8.27
0116	Enterprise Products	South Carlsbad Turbine #2	Run 1	6/22/2011	11:26:17 AM	16.85	73.98	8.42
0116	Enterprise Products	South Carlsbad Turbine #2	Run 1	6/22/2011	11:26:47 AM	16.85	73.98	8.27
0116	Enterprise Products	South Carlsbad Turbine #2	Run 1	6/22/2011	11:27:17 AM	16.85	73.98	8.12
0116	Enterprise Products	South Carlsbad Turbine #2	Run 1	6/22/2011	11:27:47 AM	16.85	74.13	8.12
0116	Enterprise Products	South Carlsbad Turbine #2	Run 1	6/22/2011	11:28:17 AM	16.85	73.83	8.57
0116	Enterprise Products	South Carlsbad Turbine #2	Run 1	6/22/2011	11:28:47 AM	16.83	74.28	8.42
0116	Enterprise Products	South Carlsbad Turbine #2	Run 1	6/22/2011	11:29:17 AM	16.83	74.13	8.27
0116	Enterprise Products	South Carlsbad Turbine #2	Run 1	6/22/2011	11:29:47 AM	16.83	74.28	8.12

0116	Enterprise Products	South Carlsbad Turbine #2	Run 1	6/22/2011	11:30:17 AM	16.85	74.43	8.12
0116	Enterprise Products	South Carlsbad Turbine #2	Run 1	6/22/2011	11:30:47 AM	16.85	74.13	8.27
0116	Enterprise Products	South Carlsbad Turbine #2	Run 1	6/22/2011	11:31:17 AM	16.83	74.28	8.12
0116	Enterprise Products	South Carlsbad Turbine #2	Run 1	6/22/2011	11:31:47 AM	16.83	74.13	8.12
0116	Enterprise Products	South Carlsbad Turbine #2	Run 1	6/22/2011	11:32:17 AM	16.83	74.13	8.12
0116	Enterprise Products	South Carlsbad Turbine #2	Run 1	6/22/2011	11:32:47 AM	16.85	73.98	8.12
0116	Enterprise Products	South Carlsbad Turbine #2	Run 1	6/22/2011	11:33:17 AM	16.85	73.53	8.27
0116	Enterprise Products	South Carlsbad Turbine #2	Run 1	6/22/2011	11:33:47 AM	16.85	73.53	8.12
0116	Enterprise Products	South Carlsbad Turbine #2	Run 1	6/22/2011	11:34:17 AM	16.85	73.08	8.42
0116	Enterprise Products	South Carlsbad Turbine #2	Run 1	6/22/2011	11:34:47 AM	16.85	73.23	8.87
0116	Enterprise Products	South Carlsbad Turbine #2	Run 1	6/22/2011	11:35:17 AM	16.85	72.93	8.42
0116	Enterprise Products	South Carlsbad Turbine #2	Run 1	6/22/2011	11:35:47 AM	16.85	72.78	8.72
0116	Enterprise Products	South Carlsbad Turbine #2	Run 1	6/22/2011	11:36:17 AM	16.85	72.78	8.27
0116	Enterprise Products	South Carlsbad Turbine #2	Run 1	6/22/2011	11:36:47 AM	16.85	72.63	8.27
0116	Enterprise Products	South Carlsbad Turbine #2	Run 1	6/22/2011	11:37:17 AM	16.85	72.63	8.57
0116	Enterprise Products	South Carlsbad Turbine #2	Run 1	6/22/2011	11:37:47 AM	16.85	72.78	8.12
0116	Enterprise Products	South Carlsbad Turbine #2	Run 1	6/22/2011	11:38:17 AM	16.85	72.93	7.97
0116	Enterprise Products	South Carlsbad Turbine #2	Run 1	6/22/2011	11:38:47 AM	16.85	73.08	7.97
0116	Enterprise Products	South Carlsbad Turbine #2	Run 1	6/22/2011	11:39:17 AM	16.85	73.23	7.97
0116	Enterprise Products	South Carlsbad Turbine #2	Run 1	6/22/2011	11:39:47 AM	16.85	73.23	7.97
0116	Enterprise Products	South Carlsbad Turbine #2	Run 1	6/22/2011	11:40:17 AM	16.85	73.68	7.97
0116	Enterprise Products	South Carlsbad Turbine #2	Run 1	6/22/2011	11:40:47 AM	16.85	73.38	8.12
0116	Enterprise Products	South Carlsbad Turbine #2	Run 1	6/22/2011	11:41:17 AM	16.85	74.13	8.12
0116	Enterprise Products	South Carlsbad Turbine #2	Run 1	6/22/2011	11:41:47 AM	16.85	74.28	8.27
0116	Enterprise Products	South Carlsbad Turbine #2	Run 1	6/22/2011	11:42:17 AM	16.85	74.73	8.12
0116	Enterprise Products	South Carlsbad Turbine #2	Run 1	6/22/2011	11:42:47 AM	16.85	75.33	8.12
0116	Enterprise Products	South Carlsbad Turbine #2	Run 1	6/22/2011	11:43:17 AM	16.85	75.18	7.97
0116	Enterprise Products	South Carlsbad Turbine #2	Run 1	6/22/2011	11:43:47 AM	16.85	75.48	8.12
0116	Enterprise Products	South Carlsbad Turbine #2	Run 1	6/22/2011	11:44:17 AM	16.85	75.33	8.12
		Averages				16.85	73.85	8.22
0116	Enterprise Products	South Carlsbad Turbine #2		6/22/2011	11:44:47 AM	16.85	75.03	7.97
0116	Enterprise Products	South Carlsbad Turbine #2		6/22/2011	11:45:17 AM	16.85	75.18	7.97
0116	Enterprise Products	South Carlsbad Turbine #2		6/22/2011	11:45:47 AM	16.85	74.73	7.97
0116	Enterprise Products	South Carlsbad Turbine #2		6/22/2011	11:46:17 AM	16.85	75.03	8.12
0116	Enterprise Products	South Carlsbad Turbine #2		6/22/2011	11:46:47 AM	16.85	75.03	8.27
0116	Enterprise Products	South Carlsbad Turbine #2	Run 2	6/22/2011	11:47:17 AM	16.85	74.88	8.27
0116	Enterprise Products	South Carlsbad Turbine #2	Run 2	6/22/2011	11:47:47 AM	16.85	75.18	8.12
0116	Enterprise Products	South Carlsbad Turbine #2	Run 2	6/22/2011	11:48:17 AM	16.85	74.88	7.97
0116	Enterprise Products	South Carlsbad Turbine #2	Run 2	6/22/2011	11:48:47 AM	16.85	75.18	8.12
0116	Enterprise Products	South Carlsbad Turbine #2	Run 2	6/22/2011	11:49:17 AM	16.85	75.18	8.12
0116	Enterprise Products	South Carlsbad Turbine #2	Run 2	6/22/2011	11:49:47 AM	16.85	74.88	8.12
0116	Enterprise Products	South Carlsbad Turbine #2	Run 2	6/22/2011	11:50:17 AM	16.85	75.33	7.97
0116	Enterprise Products	South Carlsbad Turbine #2	Run 2	6/22/2011	11:50:47 AM	16.85	74.88	7.97
0116	Enterprise Products	South Carlsbad Turbine #2	Run 2	6/22/2011	11:51:17 AM	16.85	75.03	8.12
0116	Enterprise Products	South Carlsbad Turbine #2	Run 2	6/22/2011	11:51:47 AM	16.85	75.03	8.12
0116	Enterprise Products	South Carlsbad Turbine #2	Run 2	6/22/2011	11:52:17 AM	16.85	74.88	8.12
0116	Enterprise Products	South Carlsbad Turbine #2	Run 2	6/22/2011	11:52:47 AM	16.85	74.88	8.12
0116	Enterprise Products	South Carlsbad Turbine #2	Run 2	6/22/2011	11:53:17 AM	16.85	74.58	8.12
0116	Enterprise Products	South Carlsbad Turbine #2	Run 2	6/22/2011	11:53:47 AM	16.85	75.03	7.97
0116	Enterprise Products	South Carlsbad Turbine #2	Run 2	6/22/2011	11:54:17 AM	16.88	75.03	8.12
0116	Enterprise Products	South Carlsbad Turbine #2	Run 2	6/22/2011	11:54:47 AM	16.85	74.88	8.12
0116	Enterprise Products	South Carlsbad Turbine #2	Run 2	6/22/2011	11:55:17 AM	16.88	75.03	8.12
0116	Enterprise Products	South Carlsbad Turbine #2	Run 2	6/22/2011	11:55:47 AM	16.88	74.88	7.97
0116	Enterprise Products	South Carlsbad Turbine #2	Run 2	6/22/2011	11:56:17 AM	16.88	75.18	7.97
0116	Enterprise Products	South Carlsbad Turbine #2	Run 2	6/22/2011	11:56:47 AM	16.88	75.18	7.97
0116	Enterprise Products	South Carlsbad Turbine #2	Run 2	6/22/2011	11:57:17 AM	16.88	75.18	8.12
0116	Enterprise Products	South Carlsbad Turbine #2	Run 2	6/22/2011	11:57:47 AM	16.88	75.48	7.97
0116	Enterprise Products	South Carlsbad Turbine #2	Run 2	6/22/2011	11:58:17 AM	16.88	75.33	7.97
0116	Enterprise Products	South Carlsbad Turbine #2	Run 2	6/22/2011	11:58:47 AM	16.88	75.33	7.97
0116	Enterprise Products	South Carlsbad Turbine #2	Run 2	6/22/2011	11:59:17 AM	16.88	75.33	7.97
0116	Enterprise Products	South Carlsbad Turbine #2	Run 2	6/22/2011	11:59:47 AM	16.88	75.18	7.97
0116	Enterprise Products	South Carlsbad Turbine #2	Run 2	6/22/2011	12:00:17 PM	16.88	75.03	8.12
0116	Enterprise Products	South Carlsbad Turbine #2	Run 2	6/22/2011	12:00:47 PM	16.88	74.73	8.27
0116	Enterprise Products	South Carlsbad Turbine #2	Run 2	6/22/2011	12:01:17 PM	16.88	74.58	8.13
0116	Enterprise Products	South Carlsbad Turbine #2	Run 2	6/22/2011	12:01:47 PM	16.88	74.28	7.97
0116	Enterprise Products	South Carlsbad Turbine #2	Run 2	6/22/2011	12:02:17 PM	16.88	74.13	7.97
0116	Enterprise Products	South Carlsbad Turbine #2	Run 2	6/22/2011	12:02:47 PM	16.88	74.28	7.97
0116	Enterprise Products	South Carlsbad Turbine #2	Run 2	6/22/2011	12:03:17 PM	16.88	73.98	7.97
0116	Enterprise Products	South Carlsbad Turbine #2	Run 2	6/22/2011	12:03:47 PM	16.88	74.13	7.97
0116	Enterprise Products	South Carlsbad Turbine #2	Run 2	6/22/2011	12:04:17 PM	16.90	73.83	7.97
0116	Enterprise Products	South Carlsbad Turbine #2	Run 2	6/22/2011	12:04:47 PM	16.90	74.13	7.97
0116	Enterprise Products	South Carlsbad Turbine #2	Run 2	6/22/2011	12:05:17 PM	16.90	73.83	7.97
0116	Enterprise Products	South Carlsbad Turbine #2	Run 2	6/22/2011	12:05:47 PM	16.90	73.98	7.97

0116	Enterprise Products	South Carlsbad Turbine #2	Run 2	6/22/2011	12:06:17 PM	16.90	74.13	7.82
0116	Enterprise Products	South Carlsbad Turbine #2	Run 2	6/22/2011	12:06:47 PM	16.90	74.28	7.97
0116	Enterprise Products	South Carlsbad Turbine #2	Run 2	6/22/2011	12:07:17 PM	16.90	74.28	7.97
		Averages				16.87	74.77	8.03
0116	Enterprise Products	South Carlsbad Turbine #2		6/22/2011	12:07:47 PM	16.90	74.43	7.97
0116	Enterprise Products	South Carlsbad Turbine #2		6/22/2011	12:08:17 PM	16.90	74.58	7.97
0116	Enterprise Products	South Carlsbad Turbine #2		6/22/2011	12:08:47 PM	16.90	74.43	7.97
0116	Enterprise Products	South Carlsbad Turbine #2		6/22/2011	12:09:17 PM	16.90	74.73	7.97
0116	Enterprise Products	South Carlsbad Turbine #2		6/22/2011	12:09:47 PM	16.90	74.58	8.27
0116	Enterprise Products	South Carlsbad Turbine #2		6/22/2011	12:10:17 PM	16.90	74.73	8.27
0116	Enterprise Products	South Carlsbad Turbine #2		6/22/2011	12:10:47 PM	16.90	74.58	8.43
0116	Enterprise Products	South Carlsbad Turbine #2	Run 3	6/22/2011	12:11:17 PM	16.90	74.58	8.12
0116	Enterprise Products	South Carlsbad Turbine #2	Run 3	6/22/2011	12:11:47 PM	16.90	74.73	8.12
0116	Enterprise Products	South Carlsbad Turbine #2	Run 3	6/22/2011	12:12:17 PM	16.93	74.28	7.97
0116	Enterprise Products	South Carlsbad Turbine #2	Run 3	6/22/2011	12:12:47 PM	16.93	75.03	8.43
0116	Enterprise Products	South Carlsbad Turbine #2	Run 3	6/22/2011	12:13:17 PM	16.93	74.88	7.97
0116	Enterprise Products	South Carlsbad Turbine #2	Run 3	6/22/2011	12:13:47 PM	16.93	75.18	8.12
0116	Enterprise Products	South Carlsbad Turbine #2	Run 3	6/22/2011	12:14:17 PM	16.93	75.33	7.97
0116	Enterprise Products	South Carlsbad Turbine #2	Run 3	6/22/2011	12:14:47 PM	16.93	75.48	7.97
0116	Enterprise Products	South Carlsbad Turbine #2	Run 3	6/22/2011	12:15:17 PM	16.93	75.93	7.97
0116	Enterprise Products	South Carlsbad Turbine #2	Run 3	6/22/2011	12:15:47 PM	16.93	75.63	7.97
0116	Enterprise Products	South Carlsbad Turbine #2	Run 3	6/22/2011	12:16:17 PM	16.93	75.93	7.97
0116	Enterprise Products	South Carlsbad Turbine #2	Run 3	6/22/2011	12:16:47 PM	16.93	75.78	8.12
0116	Enterprise Products	South Carlsbad Turbine #2	Run 3	6/22/2011	12:17:17 PM	16.93	75.63	7.97
0116	Enterprise Products	South Carlsbad Turbine #2	Run 3	6/22/2011	12:17:47 PM	16.93	75.78	7.97
0116	Enterprise Products	South Carlsbad Turbine #2	Run 3	6/22/2011	12:18:17 PM	16.93	75.48	7.97
0116	Enterprise Products	South Carlsbad Turbine #2	Run 3	6/22/2011	12:18:47 PM	16.93	75.78	7.97
0116	Enterprise Products	South Carlsbad Turbine #2	Run 3	6/22/2011	12:19:17 PM	16.93	75.78	7.97
0116	Enterprise Products	South Carlsbad Turbine #2	Run 3	6/22/2011	12:19:47 PM	16.93	75.48	7.97
0116	Enterprise Products	South Carlsbad Turbine #2	Run 3	6/22/2011	12:20:17 PM	16.93	75.78	7.97
0116	Enterprise Products	South Carlsbad Turbine #2	Run 3	6/22/2011	12:20:47 PM	16.93	75.63	7.97
0116	Enterprise Products	South Carlsbad Turbine #2	Run 3	6/22/2011	12:21:17 PM	16.95	75.93	7.97
0116	Enterprise Products	South Carlsbad Turbine #2	Run 3	6/22/2011	12:21:47 PM	16.95	75.78	7.97
0116	Enterprise Products	South Carlsbad Turbine #2	Run 3	6/22/2011	12:22:17 PM	16.95	75.48	7.97
0116	Enterprise Products	South Carlsbad Turbine #2	Run 3	6/22/2011	12:22:47 PM	16.95	75.93	7.97
0116	Enterprise Products	South Carlsbad Turbine #2	Run 3	6/22/2011	12:23:17 PM	16.95	75.78	7.97
0116	Enterprise Products	South Carlsbad Turbine #2	Run 3	6/22/2011	12:23:47 PM	16.95	76.08	7.97
0116	Enterprise Products	South Carlsbad Turbine #2	Run 3	6/22/2011	12:24:17 PM	16.95	76.23	7.97
0116	Enterprise Products	South Carlsbad Turbine #2	Run 3	6/22/2011	12:24:47 PM	16.95	76.08	7.97
0116	Enterprise Products	South Carlsbad Turbine #2	Run 3	6/22/2011	12:25:17 PM	16.95	76.23	7.97
0116	Enterprise Products	South Carlsbad Turbine #2	Run 3	6/22/2011	12:25:47 PM	16.95	76.08	7.82
0116	Enterprise Products	South Carlsbad Turbine #2	Run 3	6/22/2011	12:26:17 PM	16.98	76.08	7.97
0116	Enterprise Products	South Carlsbad Turbine #2	Run 3	6/22/2011	12:26:47 PM	16.98	76.23	7.97
0116	Enterprise Products	South Carlsbad Turbine #2	Run 3	6/22/2011	12:27:17 PM	16.98	76.08	7.97
0116	Enterprise Products	South Carlsbad Turbine #2	Run 3	6/22/2011	12:27:47 PM	16.98	76.23	7.97
0116	Enterprise Products	South Carlsbad Turbine #2	Run 3	6/22/2011	12:28:17 PM	16.98	76.23	7.82
0116	Enterprise Products	South Carlsbad Turbine #2	Run 3	6/22/2011	12:28:47 PM	16.98	76.23	7.97
0116	Enterprise Products	South Carlsbad Turbine #2	Run 3	6/22/2011	12:29:17 PM	16.98	76.53	7.97
0116	Enterprise Products	South Carlsbad Turbine #2	Run 3	6/22/2011	12:29:47 PM	16.98	76.08	7.82
0116	Enterprise Products	South Carlsbad Turbine #2	Run 3	6/22/2011	12:30:17 PM	16.98	76.08	7.97
0116	Enterprise Products	South Carlsbad Turbine #2	Run 3	6/22/2011	12:30:47 PM	16.98	75.78	7.97
0116	Enterprise Products	South Carlsbad Turbine #2	Run 3	6/22/2011	12:31:17 PM	16.98	75.48	7.82
		Averages				16.94	75.73	7.98
0116	Enterprise Products	South Carlsbad Turbine #2		6/22/2011	12:31:47 PM	17.05	75.48	7.97
0116	Enterprise Products	South Carlsbad Turbine #2		6/22/2011	12:32:17 PM	9.50	52.78	7.97
0116	Enterprise Products	South Carlsbad Turbine #2		6/22/2011	12:32:47 PM	0.75	50.65	22.80
0116	Enterprise Products	South Carlsbad Turbine #2		6/22/2011	12:33:17 PM	0.20	50.65	49.10
0116	Enterprise Products	South Carlsbad Turbine #2		6/22/2011	12:33:47 PM	0.20	50.65	49.10
0116	Enterprise Products	South Carlsbad Turbine #2		6/22/2011	12:34:17 PM	19.85	29.00	26.10
0116	Enterprise Products	South Carlsbad Turbine #2		6/22/2011	12:34:47 PM	20.88	0.00	0.00
0116	Enterprise Products	South Carlsbad Turbine #2		6/22/2011	12:35:17 PM	20.90	0.00	0.00
0116	Enterprise Products	South Carlsbad Turbine #2		6/22/2011	12:35:47 PM	20.90	0.00	0.00

Nolan, Shiver

From: Heap, James
Sent: Monday, July 02, 2012 12:55 PM
To: Nolan, Shiver
Cc: Thompson, Roger
Subject: FW: Carlsbad Testing
Attachments: EPCO_SC_Unit_1_Report.pdf; EPCO_SC_Unit_2_Report.pdf

The annual testing for SoCarlsbad has been received. The reports are to be included with the next semi-annual report in October. These are for loading to the portal.

++++++++++++++++++++++++++++++++
Jim Heap Sr. Field Environmental Scientist
Enterprise Products, LLC
Midland, Texas USA
Office: 432-686-5404
Cell: 432-260-0239
jkheap@eprod.com

From: Ross Thompson [mailto:rthompson@relienteti.com]
Sent: Tuesday, June 26, 2012 4:37 PM
To: Heap, James
Subject: RE: Carlsbad Testing

Attached. I reduced the file size, in case your mail server is booting it due to size.

Thank you,

Ross A. Thompson
Principal Scientist
Relient Emissions Testing. Inc.
806-773-8851 Tel
806-771-2894 Fax



From: Heap, James [mailto:JKHEAP@eprod.com]
Sent: Tuesday, June 26, 2012 1:01 PM
To: 'Ross Thompson'
Subject: RE: Carlsbad Testing

This is the last email I have in my inbox from you.

Can you re-transmit?

Thanks

++++++++++++++++++++++++++++++++
Jim Heap Sr. Field Environmental Scientist
Enterprise Products, LLC
Midland, Texas USA
Office: 432-686-5404

Cell: 432-260-0239
jkheap@eprod.com

From: Ross Thompson [mailto:rthompson@relienteti.com]
Sent: Wednesday, May 23, 2012 12:04 PM
To: Heap, James
Subject: Re: Carlsbad Testing

I'll be there at 08:00 local time.

Ross Thompson
Principal Scientist
Relient Emissions Testing, Inc.
TEL: 806-773-8851
email: rthompson@relienteti.com

Connected by DROID on Verizon Wireless

From: "Heap, James" <JKHEAP@eprod.com>
Sent: Wed May 23 12:01:19 CDT 2012
To: 'Ross Thompson' <rthompson@relienteti.com>
Subject: Carlsbad Testing

Do you have an approximate arrival time for the Carlsbad testing tomorrow?

++++++++++++++++++++++++++++++++
Jim Heap Sr. Field Environmental Scientist
Enterprise Products, LLC
Midland, Texas USA
Office: 432-686-5404
Cell: 432-260-0239
jkheap@eprod.com

This message (including any attachments) is confidential and intended for a specific individual and purpose. If you are not the intended recipient, please notify the sender immediately and delete this message.

Annual Turbine Emissions Test Report

On
Exhaust Emissions
From

One Natural Gas Fired Turbine

at the
South Carlsbad Compressor Station
Loving, NM

Prepared For
Seminole Pipeline Company

May 2012

Relient Emissions Testing, Inc
Project Number: 0181

Relient Emissions Testing Inc.
Air Emissions Testing for Industry®

Mr. Jim Heap
Enterprise Products, LLC
Midland, TX
(432) 686-5404

05/21/2012

Re: Annual emissions testing at the South Carlsbad Compressor Station on unit 1

Mr. Heap,

Exhaust emissions from one compressor turbine was tested at the South Carlsbad compressor station near Loving, New Mexico on. Testing was conducted to demonstrate compliance with emission limits set forth by NMED permit. The engine is identified as follows:

Engine Information	
Unit Number:	Unit 1
Manufacturer:	Solar
Serial Number:	49240
Model:	CENTAUR 40
Mfr. Rated Hp:	4500hp
Mfr. Rated Speed:	15,000

This is a natural gas fired turbine used for compression of natural gas for transportation through the pipeline.

The test matrix consisted of three 60-minute test runs on the turbine in accordance with NMED requirements. For each test, the average emission concentrations of nitrogen oxides (NO_X), oxygen (O_2), and carbon monoxide (CO) were measured using analytical instrumentation. Operational data such as Gas Producer Speed, Turbine Speed, and suction and discharge pressures were recorded during each run from available operational data on the unit.

Results of the tests are presented in tabular format in this report. Included in this table are engine operational data, ambient conditions, emission concentrations, and mass emission rates.

Continuous emission monitors housed in an air-conditioned mobile laboratory were used to measure the exhaust concentrations of NO_X, CO and O_2. This testing utilized the following analytical methods:

EPA Reference Method 3a	O_2 concentration
EPA Reference Method 7e	NO_X concentration
EPA Reference Method 10	CO concentration
EPA Reference Method 19	Mass emission rates

A computerized data recorder was used to record output from the analyzers. The data logger record provides documentation of the emission measurements and the instrument calibrations. The data logger records are also useful for indicating trends in the data.

Mass emission rates were calculated using EPA Method 19 calculations (combustion stoichiometry). Emission rates in terms of lbs/hr and TPY were calculated using the pollutant concentration (ppmv), the oxygen F-factor (DSCFex/MMBtu) and the horsepower specific fuel consumption rate (Btu/Hp-hr). The O_2 F-Factor used in this test series was 8710 (DSCFex/MMBtu), the EPA default value for engines burning natural gas.

A summary of the quality assurance procedures associated with the EPA test methods is presented in tabular format in the appendix of this report. Examples of these procedures include daily multipoint calibrations, zero and span checks between each test run, NO_2 to NO converter efficiency check results, sample system bias check results, and analyzer interference test results.

The appendix of this report also includes supporting test documentation, example calculations, and data logger records.

If you have any questions, please feel free to contact me at (806) 773-8851.

Sincerely,



Ross Thompson
Principal Scientist
Relient Emissions Testing, Inc

APPENDIX

Summary of Results
Quality Assurance/Quality Control Summary
Example Calculations
Calibration Certifications
Data Logger Files

Company: Enterprise Products Operating
Location: South Carlsbad Compressor Station
Source: Solar Centaur 40 S/N: 49240
Engine Rating: 4500hp @ 15000RPM
Technician: RAT

Test Run Number	**1**	**2**	**3**	
Unit	**1**	**1**	**1**	
Date	5/24/2012	5/24/2012	5/24/2012	
Start Time	8:48	9:53	11:55	
Stop Time	9:48	10:53	12:55	
Unit Operational Data				
Engine Speed (rpm)	15000	15000	15000	
Unit Horse Power (Hp)*	4307	4307	4307	
NPT Load (%)	91.6	91.6	91.6	
NGP Load (%)	95.7	95.7	95.7	
Compressor Suction Pressure (psig)	385	385	385	
Compressor Discharge Pressure (psig)	634	634	634	
T5 Temperature (°F)	1173	1173	1173	
PCD (psig)	96	96	96	
Fuel Data				
Calculated Fuel Consumption (SCFH)	35440	35440	35440	
O2 F-Factor (DSCF/MMBtu, HHV basis)	8710	8710	8710	
Fuel Heating Value (Btu/SCF, HHV basis)	1093	1093	1093	
BHp Specific Fuel Rate (Btu/Hp-hr, HHV basis)	8995	8995	8995	
BHp Specific Fuel Rate (Btu/Hp-hr, LHV basis)	8103	8103	8103	
Ambient Conditions				
Pressure Altitude (MSL)	3250	3250	3250	
Atmospheric Pressure ("Hg)	26.60	26.60	26.60	
Dry Bulb Temperature (°F)	78	81	85	
Wet Bulb Temperature (°F)	61	63	65	
Humidity (lb/lb air)	0.0087	0.0094	0.0099	
Measured Exhaust Emissions (Corrected)				**Average**
O_2 (% Vol)	16.73	16.58	16.52	**16.61**
NOx (ppmv)	74.36	84.53	85.65	**81.51**
CO (ppmv)	10.12	9.21	9.02	**9.5**
Exhaust Flow Rate (DSCFH)				
Dry SCFH (dry basis, calc. from Hp/BSFR/HHV)	1.69E+06	1.63E+06	1.61E+06	**1644398.03**
Calculated Mass Emission Rates (Based on btu Specific Fuel Rate BSFR)				
NOx (lbs/hr) **{Permit Limit = 27 lb/hr}**	15.0	16.4	16.4	**15.93**
CO (lbs/hr) **{Permit Limit = 7.4 lb/hr}**	1.2	1.0	1.0	**1.07**

*** Based on gas producer speed**

Quality Assurance

Method 7E Non-Dilution Measurement System Performance Test Procedures
Method 7E Calculated Emission Gas Concentration

Project No.: 0023
Technician: RAT

Date: 05/24/12
Client: Enterprise Products Operating
Location: South Carlsbad Compressor Station

Calibration Gas Certified Values							Gas Selection, % of Span	
	Span	Low Gas	Mid Gas	High Gas	Analyzer	Analyzer Serial Number	Low (<20%)	Mid (40%-60%)
O_2 (% Vol)	20.90	0.00	11.70	20.90	AII GPR-29	001666832	0.0%	56.0%
NOx (ppmv)	251.40	0.00	90.00	251.40	TECO 42C	030400000000842	0.0%	35.8%
CO (ppmv)	257.00	0.00	99.00	257.00	TECO 48C	48C-67940-359	0.0%	38.5%

Initial Linearity Data

Calibration Error	Analyzer Calibration Response			Absolute Difference			Difference (% of Span)		
	Low	Mid	High	Low	Mid	High	Low	Mid	High
O_2 (% Vol)	-0.01	11.70	20.87	0.01	0.00	0.03	0.05%	0.00%	0.14%
NOx (ppmv)	-0.05	91.00	251.55	0.05	1.00	0.15	0.02%	0.40%	0.06%
CO (ppmv)	0.00	101.20	255.95	0.00	2.20	1.05	0.00%	0.86%	0.41%

Run Number 1 Start: 8:48 End: 9:48

Bias and Drift	Upscale Gas	Cal. Response		Initial Values		Initial System Bias		Final Values		Final System Bias		Drift		Emission Calculation	
		Low	Upscale	Low	Upscale	Low	Upscale	Low	Upscale	Low	Upscale	Low	Upscale	Raw Avg	Run Avg
O_2 (% Vol)	20.90	-0.01	20.87	-0.01	20.77	0.00%	-0.48%	0.09	20.87	0.48%	0.00%	0.48%	0.48%	16.67	16.73 O_2 (% Vol)
NOx (ppmv)	90.00	-0.05	91.00	-0.55	87.45	-0.20%	-1.41%	0.00	86.45	0.02%	-1.81%	0.22%	-0.40%	71.79	74.36 NOx (ppmv)
CO (ppmv)	99.00	0.00	101.20	-0.50	97.95	-0.19%	-1.26%	0.00	99.45	0.00%	-0.68%	0.19%	0.58%	9.86	10.12 CO (ppmv)

Run Number 2 Start: 9:53 End: 10:53

Bias and Drift	Upscale Gas	Cal. Response		Initial Values		Initial System Bias		Final Values		Final System Bias		Drift		Emission Calculation	
		Low	Upscale	Low	Upscale	Low	Upscale	Low	Upscale	Low	Upscale	Low	Upscale	Raw Avg	Run Avg
O_2 (% Vol)	20.90	-0.01	20.87	0.09	20.87	0.48%	0.00%	0.00	20.80	0.05%	-0.33%	-0.43%	-0.33%	16.54	16.58 O_2 (% Vol)
NOx (ppmv)	90.00	-0.05	91.00	0.00	86.45	0.02%	-1.81%	0.50	90.40	0.22%	-0.24%	0.20%	1.57%	83.07	84.53 NOx (ppmv)
CO (ppmv)	99.00	0.00	101.20	0.00	99.45	0.00%	-0.68%	0.00	99.35	0.00%	-0.72%	0.00%	-0.04%	9.25	9.21 CO (ppmv)

Run Number 3 Start: 11:55 End: 12:55

Bias and Drift	Upscale Gas	Cal. Response		Initial Values		Initial System Bias		Final Values		Final System Bias		Drift		Emission Calculation	
		Low	Upscale	Low	Upscale	Low	Upscale	Low	Upscale	Low	Upscale	Low	Upscale	Raw Avg	Run Avg
O_2 (% Vol)	20.90	-0.01	20.87	0.00	20.80	0.05%	-0.33%	-0.01	20.90	0.00%	0.14%	-0.05%	0.48%	16.48	16.52 O_2 (% Vol)
NOx (ppmv)	90.00	-0.05	91.00	0.50	90.40	0.22%	-0.24%	0.00	90.21	0.02%	-0.31%	-0.20%	-0.08%	85.95	85.65 NOx (ppmv)
CO (ppmv)	99.00	0.00	101.20	0.00	99.35	0.00%	-0.72%	0.00	99.45	0.00%	-0.68%	0.00%	0.04%	9.06	9.02 CO (ppmv)

Example Calculations

Drift Corrected Emission Concentrations

Formula

$$C_{GAS} = (Ç - Co) \times \frac{C_{MA}}{C_M - C_O} \quad \textit{(eq.7e-5)}$$

All Calculations Refer to Test Run 1 or an Average of Runs 1-3

$Ç_{NOx}$ =	Raw Concentration of NOx	= 71.79 ppmv
C_O =	Avg. of Initial and Final Zero Checks	= -0.28 ppmv
C_M =	Avg. of Initial and Final Span Checks	= 86.95 ppmv
C_{MA} =	Certified Concentration of Span Gas	= 90.00 ppmv
C_{NOx} =	**(71.79 - -0.28) x 90 / (87 -- 0.3)**	**= 74.36 ppmv**

$Ç_{CO}$ =	Raw Concentration of CO	= 9.86 ppmv
C_O =	Avg. of Initial and Final Zero Checks	= -0.25 ppmv
C_M =	Avg. of Initial and Final Span Checks	= 98.70 ppmv
C_{MA} =	Certified Concentration of Span Gas	= 99.00 ppmv
C_{CO} =	**(9.86 + 0.25) x 99 / (98.7 + 0.3)**	**= 10.12 ppmv**

$Ç_{O2}$ =	Raw Concentration of O2	= 16.67%
C_O =	Avg. of initial and final zero bias checks	= 0.04%
C_M =	Avg. of initial and final span bias checks	= 20.82%
C_{MA} =	Actual concentration of span gas	= 20.90%
C_{O2} =	**(16.67 - 0.04) x 20.9 / (20.8 - 0.04)**	**= 16.73%**

Example Calculations

Exhaust Calculations

Measured Data and Constants

C_{NOx} =	Corrected Concentration of NOx	=	74.36	ppmv
C_{CO} =	Corrected Concentration of CO	=	10.12	ppmv
Horsepower =	Observed Horsepower	=	4307	Hp
lb / mole =	EPA STP for Ideal Gas	=	385.15	SCF
lbs / hr to tpy =	Mass Conversion Factor	=	4.38	hrs-tons / lbs-yr
C_F =	PPMV Normalization	=	1 x e-6	1 / ppmv
MW_{NOx} =	Molecular Weight of NOx	=	46	lb / lb-mol
MW_{CO} =	Molecular Weight of CO	=	28	lb / lb-mol

S tack Gas Flow Rate via btu Specific Fuel Rate (BSFR)

Hp =	Engine Horsepower	=	4307	Hp
F_{BTU} =	btu Specific Fuel Rate	=	8995	Btu/Hp-Hr
F_{O2} =	O2 F-Factor	=	8710	DSCF/MMBtu
C_{O2} =	Measured Concentration of O2	=	16.73	%

$$Qs_{M19} = Hp \times F_{BTU} \times F_{O2} \times 10\text{^}6 \times \frac{20.9}{(20.9 - \%O2)}$$ DSCF/H

$$Qs_{M19} = 4306.50 \times 8995 \times 8710 \times 5.01 \times 1E\text{-}06$$

Qs_{M19} = 1.69E+06 DSCF/H

Formulas

Pounds per Hour (lbs/hr) :

$$Ex\ (lb/hr) = Cx * C_F * Qs * \{ MWx / (lb / mole) \}$$

Tons per Year (tpy) :

$$Ex\ (tpy) = Ex\ (lb/hr) * \{ 8760\ (hr / yr) / 2000\ (lb / ton) \}$$

Grams per Horsepower-hour (g/Hp-hr) :

$$Ex\ (g/hp\text{-}hr) = \{ Ex\ (lb/hr) / Hp \} / 454\ (g / lb) \}$$

Oxygen Correction (Cx @ 15%O_2)

$$(Cx\ @\ 15\%O_2) = (X^* (20.9\text{-}15)/(20.9\text{-}O_2\ measured)$$

Calculated Mass Emission Rates From Method 19 Exhaust Flow Rates

E_{NOx}

$$\textbf{lbs/hr} = 74.36 * 1 \text{ x e-6} * 1.69E+06 * \frac{46}{385.15} = \textbf{15.02}$$

$$\textbf{tpy} = 15.02\ lb/hr * 4.38 * \frac{hrs\text{-}ton}{lbs\text{-}yr} = \textbf{65.78}$$

$$\textbf{g/Hp-hr} = \frac{15.02\ lb/hr}{4307\ Hp} * \frac{454\ g}{1\ lb} = \textbf{1.58}$$

E_{CO}

$$\textbf{lbs/hr} = 10.12 * 1 \text{ x e-6} * 1.69E+06 * \frac{28}{385.15} = \textbf{1.24}$$

$$\textbf{tpy} = 1.24\ lb/hr * 4.38 * \frac{hrs\text{-}ton}{lbs\text{-}yr} = \textbf{5.45}$$

$$\textbf{g/Hp-hr} = \frac{1.24\ lb/hr}{4307\ Hp} * \frac{454\ g}{1\ lb} = \textbf{0.13}$$

Project Number	Client	Source	Run Number	Date	Time	O2 (% Vol)	NOX (ppmvd)	CO (ppmvd)
0181	Enterprise Products			5/24/2012	8:52:04 AM	0.18	0.00	0.00
0181	Enterprise Products			5/24/2012	8:53:04 AM	-0.01	0.00	0.00
0181	Enterprise Products			5/24/2012	8:54:04 AM	-0.01	0.00	0.00
0181	Enterprise Products			5/24/2012	8:55:04 AM	-0.01	0.00	0.00
0181	Enterprise Products			5/24/2012	8:56:04 AM	-0.01	-0.05	0.00
0181	Enterprise Products			5/24/2012	8:57:04 AM	-0.01	-0.05	0.00
0181	Enterprise Products			5/24/2012	8:58:04 AM	-0.01	-0.05	0.00
0181	Enterprise Products			5/24/2012	8:59:04 AM	-0.01	0.00	0.00
0181	Enterprise Products			5/24/2012	9:00:04 AM	-0.01	0.00	0.00
0181	Enterprise Products			5/24/2012	9:01:04 AM	-0.01	0.00	-0.05
0181	Enterprise Products			5/24/2012	9:02:04 AM	-0.01	-0.05	0.00
0181	Enterprise Products			5/24/2012	9:03:04 AM	-0.01	-0.05	0.00
0181	Enterprise Products			5/24/2012	9:04:04 AM	-0.01	0.00	0.00
0181	Enterprise Products			5/24/2012	9:05:04 AM	-0.01	0.00	0.00
0181	Enterprise Products			5/24/2012	9:06:04 AM	***-0.01***	***-0.05***	***0.00***
0181	Enterprise Products			5/24/2012	9:07:04 AM	-0.01	-0.05	0.90
0181	Enterprise Products			5/24/2012	9:08:04 AM	21.16	70.00	255.45
0181	Enterprise Products			5/24/2012	9:09:04 AM	***20.87***	90.50	***255.95***
0181	Enterprise Products			5/24/2012	9:10:04 AM	12.19	***91.00***	***101.20***
0181	Enterprise Products			5/24/2012	9:11:04 AM	11.70	251.44	38.00
0181	Enterprise Products			5/24/2012	9:12:04 AM	***11.70***	***251.55***	0.00
0181	Enterprise Products			5/24/2012	9:13:04 AM	11.70	76.95	0.00
0181	Enterprise Products			5/24/2012	9:14:04 AM	11.80	-0.50	-0.05
0181	Enterprise Products			5/24/2012	9:15:04 AM	11.80	-0.50	-0.05
0181	Enterprise Products			5/24/2012	9:16:04 AM	11.80	218.10	0.00
0181	Enterprise Products			5/24/2012	9:17:04 AM	11.90	254.10	0.00
0181	Enterprise Products			5/24/2012	9:18:04 AM	11.90	128.50	0.00
0181	Enterprise Products			5/24/2012	9:19:04 AM	11.90	28.45	0.00
0181	Enterprise Products			5/24/2012	9:20:04 AM	11.90	418.70	0.00
0181	Enterprise Products			5/24/2012	9:21:04 AM	11.90	499.75	-0.05
0181	Enterprise Products			5/24/2012	9:22:04 AM	11.90	300.15	0.00
0181	Enterprise Products			5/24/2012	9:23:04 AM	11.99	104.50	0.00
0181	Enterprise Products			5/24/2012	9:24:04 AM	12.00	89.50	0.00
0181	Enterprise Products			5/24/2012	9:25:04 AM	12.00	89.00	0.00
0181	Enterprise Products			5/24/2012	9:26:04 AM	12.00	19.95	-0.05
0181	Enterprise Products			5/24/2012	9:27:04 AM	12.00	5.95	0.00
0181	Enterprise Products			5/24/2012	9:28:04 AM	12.00	4.95	0.00
0181	Enterprise Products			5/24/2012	9:29:04 AM	12.10	4.95	0.00
0181	Enterprise Products			5/24/2012	9:30:04 AM	12.09	4.95	0.00
0181	Enterprise Products			5/24/2012	9:31:04 AM	12.09	4.95	0.00
0181	Enterprise Products			5/24/2012	9:32:04 AM	12.09	4.90	0.00
0181	Enterprise Products			5/24/2012	9:33:04 AM	12.19	4.45	0.00
0181	Enterprise Products			5/24/2012	9:34:04 AM	12.19	4.45	-0.05
0181	Enterprise Products			5/24/2012	9:35:04 AM	12.19	4.45	0.00
0181	Enterprise Products			5/24/2012	9:36:04 AM	12.19	4.40	0.00
0181	Enterprise Products			5/24/2012	9:37:04 AM	12.19	4.40	0.90
0181	Enterprise Products			5/24/2012	9:38:04 AM	20.68	2.90	0.00
0181	Enterprise Products			5/24/2012	9:39:04 AM	20.68	-0.55	-0.05
0181	Enterprise Products			5/24/2012	9:40:04 AM	20.68	-0.55	-0.55
0181	Enterprise Products			5/24/2012	9:41:04 AM	***20.77***	***-0.55***	***-0.50***
0181	Enterprise Products			5/24/2012	9:42:04 AM	20.68	-0.55	20.25
0181	Enterprise Products			5/24/2012	9:43:04 AM	17.55	1.40	5.90
0181	Enterprise Products			5/24/2012	9:44:04 AM	16.77	67.00	11.30
0181	Enterprise Products			5/24/2012	9:45:04 AM	16.77	71.50	10.80
0181	Enterprise Products			5/24/2012	9:46:04 AM	0.28	71.00	85.10
0181	Enterprise Products			5/24/2012	9:47:04 AM	***-0.01***	***87.45***	***97.95***
0181	Enterprise Products	South Carlsbad #1		5/24/2012	9:47:43 AM	13.46	87.45	62.30
0181	Enterprise Products	South Carlsbad #1		5/24/2012	9:48:13 AM	16.67	81.45	11.85
0181	Enterprise Products	South Carlsbad #1		5/24/2012	9:48:43 AM	16.67	73.00	10.30
0181	Enterprise Products	South Carlsbad #1		5/24/2012	9:48:46 AM	16.67	73.00	10.30
0181	Enterprise Products	South Carlsbad #1	Run 1	5/24/2012	9:49:16 AM	16.67	72.50	9.85
0181	Enterprise Products	South Carlsbad #1	Run 1	5/24/2012	9:49:46 AM	16.67	72.45	9.85
0181	Enterprise Products	South Carlsbad #1	Run 1	5/24/2012	9:50:16 AM	16.67	72.45	10.85
0181	Enterprise Products	South Carlsbad #1	Run 1	5/24/2012	9:50:46 AM	16.67	72.45	10.30
0181	Enterprise Products	South Carlsbad #1	Run 1	5/24/2012	9:51:16 AM	16.67	72.45	10.80
0181	Enterprise Products	South Carlsbad #1	Run 1	5/24/2012	9:51:46 AM	16.67	72.50	10.30
0181	Enterprise Products	South Carlsbad #1	Run 1	5/24/2012	9:52:16 AM	16.67	72.00	10.30
0181	Enterprise Products	South Carlsbad #1	Run 1	5/24/2012	9:52:46 AM	16.67	71.95	10.30
0181	Enterprise Products	South Carlsbad #1	Run 1	5/24/2012	9:53:16 AM	16.67	72.00	9.85

Project Number	Client	Source	Run Number	Date	Time	O2 (% Vol)	NOX (ppmvd)	CO (ppmvd)
0181	Enterprise Products	South Carlsbad #1	Run 1	5/24/2012	9:53:46 AM	16.67	72.50	9.85
0181	Enterprise Products	South Carlsbad #1	Run 1	5/24/2012	9:54:16 AM	16.67	72.00	10.30
0181	Enterprise Products	South Carlsbad #1	Run 1	5/24/2012	9:54:46 AM	16.67	72.50	9.85
0181	Enterprise Products	South Carlsbad #1	Run 1	5/24/2012	9:55:16 AM	16.67	73.00	9.35
0181	Enterprise Products	South Carlsbad #1	Run 1	5/24/2012	9:55:46 AM	16.67	72.95	9.35
0181	Enterprise Products	South Carlsbad #1	Run 1	5/24/2012	9:56:16 AM	16.67	73.00	10.30
0181	Enterprise Products	South Carlsbad #1	Run 1	5/24/2012	9:56:46 AM	16.67	73.50	10.30
0181	Enterprise Products	South Carlsbad #1	Run 1	5/24/2012	9:57:16 AM	16.67	73.45	10.30
0181	Enterprise Products	South Carlsbad #1	Run 1	5/24/2012	9:57:46 AM	16.67	73.00	10.30
0181	Enterprise Products	South Carlsbad #1	Run 1	5/24/2012	9:58:16 AM	16.67	72.00	9.85
0181	Enterprise Products	South Carlsbad #1	Run 1	5/24/2012	9:58:46 AM	16.67	71.95	9.85
0181	Enterprise Products	South Carlsbad #1	Run 1	5/24/2012	9:59:16 AM	16.67	71.95	9.85
0181	Enterprise Products	South Carlsbad #1	Run 1	5/24/2012	9:59:46 AM	16.67	71.45	9.85
0181	Enterprise Products	South Carlsbad #1	Run 1	5/24/2012	10:00:16 AM	16.67	71.50	10.80
0181	Enterprise Products	South Carlsbad #1	Run 1	5/24/2012	10:00:46 AM	16.67	71.45	10.80
0181	Enterprise Products	South Carlsbad #1	Run 1	5/24/2012	10:01:16 AM	16.67	71.50	9.85
0181	Enterprise Products	South Carlsbad #1	Run 1	5/24/2012	10:01:46 AM	16.67	72.00	9.85
0181	Enterprise Products	South Carlsbad #1	Run 1	5/24/2012	10:02:16 AM	16.67	71.50	10.80
0181	Enterprise Products	South Carlsbad #1	Run 1	5/24/2012	10:02:46 AM	16.67	71.45	9.35
0181	Enterprise Products	South Carlsbad #1	Run 1	5/24/2012	10:03:16 AM	16.67	71.50	9.85
0181	Enterprise Products	South Carlsbad #1	Run 1	5/24/2012	10:03:46 AM	16.67	71.45	9.85
0181	Enterprise Products	South Carlsbad #1	Run 1	5/24/2012	10:04:16 AM	16.67	72.00	9.85
0181	Enterprise Products	South Carlsbad #1	Run 1	5/24/2012	10:04:46 AM	16.67	72.50	10.30
0181	Enterprise Products	South Carlsbad #1	Run 1	5/24/2012	10:05:16 AM	16.67	72.00	10.30
0181	Enterprise Products	South Carlsbad #1	Run 1	5/24/2012	10:05:46 AM	16.67	71.95	10.30
0181	Enterprise Products	South Carlsbad #1	Run 1	5/24/2012	10:06:16 AM	16.67	72.00	10.85
0181	Enterprise Products	South Carlsbad #1	Run 1	5/24/2012	10:06:46 AM	16.67	72.00	10.85
0181	Enterprise Products	South Carlsbad #1	Run 1	5/24/2012	10:07:16 AM	16.67	72.00	9.85
0181	Enterprise Products	South Carlsbad #1	Run 1	5/24/2012	10:07:46 AM	16.67	71.50	10.80
0181	Enterprise Products	South Carlsbad #1	Run 1	5/24/2012	10:08:16 AM	16.67	71.45	9.85
0181	Enterprise Products	South Carlsbad #1	Run 1	5/24/2012	10:08:46 AM	16.67	71.50	9.85
0181	Enterprise Products	South Carlsbad #1	Run 1	5/24/2012	10:09:16 AM	16.67	71.50	9.35
0181	Enterprise Products	South Carlsbad #1	Run 1	5/24/2012	10:09:46 AM	16.67	71.50	9.85
0181	Enterprise Products	South Carlsbad #1	Run 1	5/24/2012	10:10:16 AM	16.67	71.45	9.85
0181	Enterprise Products	South Carlsbad #1	Run 1	5/24/2012	10:10:46 AM	16.67	71.50	10.80
0181	Enterprise Products	South Carlsbad #1	Run 1	5/24/2012	10:11:16 AM	16.67	71.50	10.30
0181	Enterprise Products	South Carlsbad #1	Run 1	5/24/2012	10:11:46 AM	16.67	72.00	10.30
0181	Enterprise Products	South Carlsbad #1	Run 1	5/24/2012	10:12:16 AM	16.67	71.95	9.85
0181	Enterprise Products	South Carlsbad #1	Run 1	5/24/2012	10:12:46 AM	16.67	72.00	9.35
0181	Enterprise Products	South Carlsbad #1	Run 1	5/24/2012	10:13:16 AM	16.67	72.00	8.85
0181	Enterprise Products	South Carlsbad #1	Run 1	5/24/2012	10:13:46 AM	16.67	72.00	9.85
0181	Enterprise Products	South Carlsbad #1	Run 1	5/24/2012	10:14:16 AM	16.67	72.00	9.85
0181	Enterprise Products	South Carlsbad #1	Run 1	5/24/2012	10:14:46 AM	16.67	72.00	9.85
0181	Enterprise Products	South Carlsbad #1	Run 1	5/24/2012	10:15:16 AM	16.67	71.95	9.35
0181	Enterprise Products	South Carlsbad #1	Run 1	5/24/2012	10:15:46 AM	16.67	71.95	9.35
0181	Enterprise Products	South Carlsbad #1	Run 1	5/24/2012	10:16:16 AM	16.67	72.00	9.85
0181	Enterprise Products	South Carlsbad #1	Run 1	5/24/2012	10:16:46 AM	16.67	72.00	10.30
0181	Enterprise Products	South Carlsbad #1	Run 1	5/24/2012	10:17:16 AM	16.67	72.00	9.35
0181	Enterprise Products	South Carlsbad #1	Run 1	5/24/2012	10:17:46 AM	16.67	72.00	9.35
0181	Enterprise Products	South Carlsbad #1	Run 1	5/24/2012	10:18:16 AM	16.67	72.00	10.30
0181	Enterprise Products	South Carlsbad #1	Run 1	5/24/2012	10:18:46 AM	16.67	72.00	10.30
0181	Enterprise Products	South Carlsbad #1	Run 1	5/24/2012	10:19:16 AM	16.67	72.00	9.85
0181	Enterprise Products	South Carlsbad #1	Run 1	5/24/2012	10:19:46 AM	16.67	71.50	9.85
0181	Enterprise Products	South Carlsbad #1	Run 1	5/24/2012	10:20:16 AM	16.67	72.00	9.85
0181	Enterprise Products	South Carlsbad #1	Run 1	5/24/2012	10:20:46 AM	16.67	72.00	9.35
0181	Enterprise Products	South Carlsbad #1	Run 1	5/24/2012	10:21:16 AM	16.67	71.45	9.85
0181	Enterprise Products	South Carlsbad #1	Run 1	5/24/2012	10:21:46 AM	16.67	71.50	9.85
0181	Enterprise Products	South Carlsbad #1	Run 1	5/24/2012	10:22:16 AM	16.67	71.50	10.30
0181	Enterprise Products	South Carlsbad #1	Run 1	5/24/2012	10:22:46 AM	16.67	71.50	10.30
0181	Enterprise Products	South Carlsbad #1	Run 1	5/24/2012	10:23:16 AM	16.67	71.45	10.30
0181	Enterprise Products	South Carlsbad #1	Run 1	5/24/2012	10:23:46 AM	16.67	71.50	10.30
0181	Enterprise Products	South Carlsbad #1	Run 1	5/24/2012	10:24:16 AM	16.67	72.00	10.30
0181	Enterprise Products	South Carlsbad #1	Run 1	5/24/2012	10:24:46 AM	16.67	71.50	9.85
0181	Enterprise Products	South Carlsbad #1	Run 1	5/24/2012	10:25:16 AM	16.67	71.50	10.30
0181	Enterprise Products	South Carlsbad #1	Run 1	5/24/2012	10:25:46 AM	16.67	72.00	10.30
0181	Enterprise Products	South Carlsbad #1	Run 1	5/24/2012	10:26:16 AM	16.67	71.95	9.35
0181	Enterprise Products	South Carlsbad #1	Run 1	5/24/2012	10:26:46 AM	16.67	71.95	9.35
0181	Enterprise Products	South Carlsbad #1	Run 1	5/24/2012	10:27:16 AM	16.67	71.50	9.35
0181	Enterprise Products	South Carlsbad #1	Run 1	5/24/2012	10:27:46 AM	16.67	72.00	9.35

Project Number	Client	Source	Run Number	Date	Time	O2 (% Vol)	NOX (ppmvd)	CO (ppmvd)
0181	Enterprise Products	South Carlsbad #1	Run 1	5/24/2012	10:28:16 AM	16.67	71.50	9.85
0181	Enterprise Products	South Carlsbad #1	Run 1	5/24/2012	10:28:46 AM	16.67	71.50	10.30
0181	Enterprise Products	South Carlsbad #1	Run 1	5/24/2012	10:29:16 AM	16.67	71.50	9.85
0181	Enterprise Products	South Carlsbad #1	Run 1	5/24/2012	10:29:46 AM	16.67	71.45	9.35
0181	Enterprise Products	South Carlsbad #1	Run 1	5/24/2012	10:30:16 AM	16.67	71.50	9.35
0181	Enterprise Products	South Carlsbad #1	Run 1	5/24/2012	10:30:46 AM	16.67	71.50	9.35
0181	Enterprise Products	South Carlsbad #1	Run 1	5/24/2012	10:31:16 AM	16.67	71.50	9.35
0181	Enterprise Products	South Carlsbad #1	Run 1	5/24/2012	10:31:46 AM	16.67	71.00	9.75
0181	Enterprise Products	South Carlsbad #1	Run 1	5/24/2012	10:32:16 AM	16.67	71.50	9.35
0181	Enterprise Products	South Carlsbad #1	Run 1	5/24/2012	10:32:46 AM	16.67	71.50	9.35
0181	Enterprise Products	South Carlsbad #1	Run 1	5/24/2012	10:33:16 AM	16.67	71.50	9.85
0181	Enterprise Products	South Carlsbad #1	Run 1	5/24/2012	10:33:46 AM	16.67	71.50	10.80
0181	Enterprise Products	South Carlsbad #1	Run 1	5/24/2012	10:34:16 AM	16.67	71.50	9.85
0181	Enterprise Products	South Carlsbad #1	Run 1	5/24/2012	10:34:46 AM	16.67	71.50	9.85
0181	Enterprise Products	South Carlsbad #1	Run 1	5/24/2012	10:35:16 AM	16.67	71.00	9.85
0181	Enterprise Products	South Carlsbad #1	Run 1	5/24/2012	10:35:46 AM	16.67	71.50	8.85
0181	Enterprise Products	South Carlsbad #1	Run 1	5/24/2012	10:36:16 AM	16.67	70.95	9.85
0181	Enterprise Products	South Carlsbad #1	Run 1	5/24/2012	10:36:46 AM	16.67	71.50	9.35
0181	Enterprise Products	South Carlsbad #1	Run 1	5/24/2012	10:37:16 AM	16.67	71.50	9.85
0181	Enterprise Products	South Carlsbad #1	Run 1	5/24/2012	10:37:46 AM	16.67	71.50	9.85
0181	Enterprise Products	South Carlsbad #1	Run 1	5/24/2012	10:38:16 AM	16.67	71.50	9.85
0181	Enterprise Products	South Carlsbad #1	Run 1	5/24/2012	10:38:46 AM	16.67	71.50	9.85
0181	Enterprise Products	South Carlsbad #1	Run 1	5/24/2012	10:39:16 AM	16.67	71.50	9.85
0181	Enterprise Products	South Carlsbad #1	Run 1	5/24/2012	10:39:46 AM	16.67	71.50	9.85
0181	Enterprise Products	South Carlsbad #1	Run 1	5/24/2012	10:40:16 AM	16.67	71.50	8.85
0181	Enterprise Products	South Carlsbad #1	Run 1	5/24/2012	10:40:46 AM	16.67	71.50	8.85
0181	Enterprise Products	South Carlsbad #1	Run 1	5/24/2012	10:41:16 AM	16.67	71.50	9.35
0181	Enterprise Products	South Carlsbad #1	Run 1	5/24/2012	10:41:46 AM	16.67	71.50	9.85
0181	Enterprise Products	South Carlsbad #1	Run 1	5/24/2012	10:42:16 AM	16.67	71.45	9.35
0181	Enterprise Products	South Carlsbad #1	Run 1	5/24/2012	10:42:46 AM	16.67	71.50	8.85
0181	Enterprise Products	South Carlsbad #1	Run 1	5/24/2012	10:43:16 AM	16.67	71.50	9.35
0181	Enterprise Products	South Carlsbad #1	Run 1	5/24/2012	10:43:46 AM	16.67	71.50	9.35
0181	Enterprise Products	South Carlsbad #1	Run 1	5/24/2012	10:44:16 AM	16.67	71.50	8.85
0181	Enterprise Products	South Carlsbad #1	Run 1	5/24/2012	10:44:46 AM	16.67	71.50	9.35
0181	Enterprise Products	South Carlsbad #1	Run 1	5/24/2012	10:45:16 AM	16.67	71.50	10.30
0181	Enterprise Products	South Carlsbad #1	Run 1	5/24/2012	10:45:46 AM	16.67	71.45	9.35
0181	Enterprise Products	South Carlsbad #1	Run 1	5/24/2012	10:46:16 AM	16.67	71.50	9.85
0181	Enterprise Products	South Carlsbad #1	Run 1	5/24/2012	10:46:46 AM	16.67	71.45	9.35
0181	Enterprise Products	South Carlsbad #1	Run 1	5/24/2012	10:47:16 AM	16.67	71.50	10.30
0181	Enterprise Products	South Carlsbad #1	Run 1	5/24/2012	10:47:46 AM	16.67	71.50	9.85
0181	Enterprise Products	South Carlsbad #1	Run 1	5/24/2012	10:48:16 AM	16.67	71.50	9.35
0181	Enterprise Products	South Carlsbad #1	Run 1	5/24/2012	10:48:46 AM	16.58	71.50	9.35
		Run Averages				16.67	71.79	9.86
0181	Enterprise Products	South Carlsbad #1		5/24/2012	10:49:16 AM	16.57	71.45	9.85
0181	Enterprise Products	South Carlsbad #1		5/24/2012	10:49:46 AM	16.58	71.95	9.85
0181	Enterprise Products	South Carlsbad #1		5/24/2012	10:50:16 AM	20.87	0.00	0.00
0181	Enterprise Products	South Carlsbad #1		5/24/2012	10:50:46 AM	***20.87***	***0.00***	***0.00***
0181	Enterprise Products	South Carlsbad #1		5/24/2012	10:51:16 AM	2.04	82.00	49.35
0181	Enterprise Products	South Carlsbad #1		5/24/2012	10:51:46 AM	***0.09***	86.45	***99.45***
0181	Enterprise Products	South Carlsbad #1		5/24/2012	10:52:16 AM	9.55	***86.45***	75.20
0181	Enterprise Products	South Carlsbad #1		5/24/2012	10:52:46 AM	16.48	84.50	13.80
0181	Enterprise Products	South Carlsbad #1		5/24/2012	10:52:58 AM	16.58	77.50	9.85
0181	Enterprise Products	South Carlsbad #1	Run 2	5/24/2012	10:53:28 AM	16.58	72.50	9.35
0181	Enterprise Products	South Carlsbad #1	Run 2	5/24/2012	10:53:58 AM	16.58	72.00	9.85
0181	Enterprise Products	South Carlsbad #1	Run 2	5/24/2012	10:54:28 AM	16.58	72.00	9.35
0181	Enterprise Products	South Carlsbad #1	Run 2	5/24/2012	10:54:58 AM	16.58	72.00	10.85
0181	Enterprise Products	South Carlsbad #1	Run 2	5/24/2012	10:55:28 AM	16.57	71.45	10.30
0181	Enterprise Products	South Carlsbad #1	Run 2	5/24/2012	10:55:58 AM	16.58	71.50	9.35
0181	Enterprise Products	South Carlsbad #1	Run 2	5/24/2012	10:56:28 AM	16.57	72.00	9.85
0181	Enterprise Products	South Carlsbad #1	Run 2	5/24/2012	10:56:58 AM	16.58	71.95	10.30
0181	Enterprise Products	South Carlsbad #1	Run 2	5/24/2012	10:57:28 AM	16.58	72.00	9.85
0181	Enterprise Products	South Carlsbad #1	Run 2	5/24/2012	10:57:58 AM	16.58	72.00	10.30
0181	Enterprise Products	South Carlsbad #1	Run 2	5/24/2012	10:58:28 AM	16.58	72.00	10.30
0181	Enterprise Products	South Carlsbad #1	Run 2	5/24/2012	10:58:58 AM	16.57	72.00	9.85
0181	Enterprise Products	South Carlsbad #1	Run 2	5/24/2012	10:59:28 AM	16.58	72.00	9.35
0181	Enterprise Products	South Carlsbad #1	Run 2	5/24/2012	10:59:58 AM	16.58	72.00	9.35
0181	Enterprise Products	South Carlsbad #1	Run 2	5/24/2012	11:00:28 AM	16.58	72.00	9.35
0181	Enterprise Products	South Carlsbad #1	Run 2	5/24/2012	11:00:58 AM	16.58	72.00	9.35
0181	Enterprise Products	South Carlsbad #1	Run 2	5/24/2012	11:01:28 AM	16.57	72.00	8.85

Project Number	Client	Source	Run Number	Date	Time	O2 (% Vol)	NOX (ppmvd)	CO (ppmvd)
0181	Enterprise Products	South Carlsbad #1	Run 2	5/24/2012	11:01:58 AM	16.57	71.45	8.85
0181	Enterprise Products	South Carlsbad #1	Run 2	5/24/2012	11:02:28 AM	16.58	71.50	8.85
0181	Enterprise Products	South Carlsbad #1	Run 2	5/24/2012	11:02:58 AM	16.58	71.50	8.85
0181	Enterprise Products	South Carlsbad #1	Run 2	5/24/2012	11:03:28 AM	16.57	71.50	9.35
0181	Enterprise Products	South Carlsbad #1	Run 2	5/24/2012	11:03:58 AM	16.57	72.00	9.85
0181	Enterprise Products	South Carlsbad #1	Run 2	5/24/2012	11:04:28 AM	16.58	72.00	10.30
0181	Enterprise Products	South Carlsbad #1	Run 2	5/24/2012	11:04:58 AM	16.57	77.50	10.30
0181	Enterprise Products	South Carlsbad #1	Run 2	5/24/2012	11:05:28 AM	16.58	84.50	9.85
0181	Enterprise Products	South Carlsbad #1	Run 2	5/24/2012	11:05:58 AM	16.58	84.00	9.85
0181	Enterprise Products	South Carlsbad #1	Run 2	5/24/2012	11:06:28 AM	16.58	84.00	8.85
0181	Enterprise Products	South Carlsbad #1	Run 2	5/24/2012	11:06:58 AM	16.58	84.00	9.35
0181	Enterprise Products	South Carlsbad #1	Run 2	5/24/2012	11:07:28 AM	16.58	84.50	9.35
0181	Enterprise Products	South Carlsbad #1	Run 2	5/24/2012	11:07:58 AM	16.57	84.50	10.30
0181	Enterprise Products	South Carlsbad #1	Run 2	5/24/2012	11:08:28 AM	16.58	84.50	10.30
0181	Enterprise Products	South Carlsbad #1	Run 2	5/24/2012	11:08:58 AM	16.58	84.50	9.35
0181	Enterprise Products	South Carlsbad #1	Run 2	5/24/2012	11:09:28 AM	16.58	84.50	8.85
0181	Enterprise Products	South Carlsbad #1	Run 2	5/24/2012	11:09:58 AM	16.57	84.50	8.85
0181	Enterprise Products	South Carlsbad #1	Run 2	5/24/2012	11:10:28 AM	16.58	84.50	9.85
0181	Enterprise Products	South Carlsbad #1	Run 2	5/24/2012	11:10:58 AM	16.58	84.50	9.85
0181	Enterprise Products	South Carlsbad #1	Run 2	5/24/2012	11:11:28 AM	16.57	85.00	8.85
0181	Enterprise Products	South Carlsbad #1	Run 2	5/24/2012	11:11:58 AM	16.48	85.00	9.35
0181	Enterprise Products	South Carlsbad #1	Run 2	5/24/2012	11:12:28 AM	16.48	85.50	8.85
0181	Enterprise Products	South Carlsbad #1	Run 2	5/24/2012	11:12:58 AM	16.48	86.00	9.35
0181	Enterprise Products	South Carlsbad #1	Run 2	5/24/2012	11:13:28 AM	16.48	86.00	8.85
0181	Enterprise Products	South Carlsbad #1	Run 2	5/24/2012	11:13:58 AM	16.48	86.50	8.30
0181	Enterprise Products	South Carlsbad #1	Run 2	5/24/2012	11:14:28 AM	16.48	86.50	8.35
0181	Enterprise Products	South Carlsbad #1	Run 2	5/24/2012	11:14:58 AM	16.48	86.50	8.35
0181	Enterprise Products	South Carlsbad #1	Run 2	5/24/2012	11:15:28 AM	16.48	86.50	8.85
0181	Enterprise Products	South Carlsbad #1	Run 2	5/24/2012	11:15:58 AM	16.48	86.00	9.35
0181	Enterprise Products	South Carlsbad #1	Run 2	5/24/2012	11:16:28 AM	16.57	86.00	9.85
0181	Enterprise Products	South Carlsbad #1	Run 2	5/24/2012	11:16:58 AM	16.57	86.00	9.85
0181	Enterprise Products	South Carlsbad #1	Run 2	5/24/2012	11:17:28 AM	16.48	86.00	8.85
0181	Enterprise Products	South Carlsbad #1	Run 2	5/24/2012	11:17:58 AM	16.48	86.00	8.85
0181	Enterprise Products	South Carlsbad #1	Run 2	5/24/2012	11:18:28 AM	16.48	86.00	8.35
0181	Enterprise Products	South Carlsbad #1	Run 2	5/24/2012	11:18:58 AM	16.48	86.00	8.35
0181	Enterprise Products	South Carlsbad #1	Run 2	5/24/2012	11:19:28 AM	16.58	86.00	8.85
0181	Enterprise Products	South Carlsbad #1	Run 2	5/24/2012	11:19:58 AM	16.48	86.00	8.85
0181	Enterprise Products	South Carlsbad #1	Run 2	5/24/2012	11:20:28 AM	16.57	86.00	9.85
0181	Enterprise Products	South Carlsbad #1	Run 2	5/24/2012	11:20:58 AM	16.58	86.00	9.35
0181	Enterprise Products	South Carlsbad #1	Run 2	5/24/2012	11:21:28 AM	16.48	86.00	9.35
0181	Enterprise Products	South Carlsbad #1	Run 2	5/24/2012	11:21:58 AM	16.48	86.50	8.85
0181	Enterprise Products	South Carlsbad #1	Run 2	5/24/2012	11:22:28 AM	16.48	86.50	8.35
0181	Enterprise Products	South Carlsbad #1	Run 2	5/24/2012	11:22:58 AM	16.48	87.00	8.85
0181	Enterprise Products	South Carlsbad #1	Run 2	5/24/2012	11:23:28 AM	16.58	86.50	9.35
0181	Enterprise Products	South Carlsbad #1	Run 2	5/24/2012	11:23:58 AM	16.48	87.00	9.35
0181	Enterprise Products	South Carlsbad #1	Run 2	5/24/2012	11:24:28 AM	16.48	86.50	9.85
0181	Enterprise Products	South Carlsbad #1	Run 2	5/24/2012	11:24:58 AM	16.48	87.00	9.35
0181	Enterprise Products	South Carlsbad #1	Run 2	5/24/2012	11:25:28 AM	16.48	88.00	9.85
0181	Enterprise Products	South Carlsbad #1	Run 2	5/24/2012	11:25:58 AM	16.48	88.50	9.35
0181	Enterprise Products	South Carlsbad #1	Run 2	5/24/2012	11:26:28 AM	16.48	88.50	9.35
0181	Enterprise Products	South Carlsbad #1	Run 2	5/24/2012	11:26:58 AM	16.48	87.50	9.35
0181	Enterprise Products	South Carlsbad #1	Run 2	5/24/2012	11:27:28 AM	16.48	87.00	8.85
0181	Enterprise Products	South Carlsbad #1	Run 2	5/24/2012	11:27:58 AM	16.48	87.00	8.85
0181	Enterprise Products	South Carlsbad #1	Run 2	5/24/2012	11:28:28 AM	16.58	87.00	8.85
0181	Enterprise Products	South Carlsbad #1	Run 2	5/24/2012	11:28:58 AM	16.48	87.00	8.85
0181	Enterprise Products	South Carlsbad #1	Run 2	5/24/2012	11:29:28 AM	16.48	87.00	9.35
0181	Enterprise Products	South Carlsbad #1	Run 2	5/24/2012	11:29:58 AM	16.48	88.00	9.85
0181	Enterprise Products	South Carlsbad #1	Run 2	5/24/2012	11:30:28 AM	16.48	88.50	9.35
0181	Enterprise Products	South Carlsbad #1	Run 2	5/24/2012	11:30:58 AM	16.48	87.50	9.35
0181	Enterprise Products	South Carlsbad #1	Run 2	5/24/2012	11:31:28 AM	16.48	87.00	8.85
0181	Enterprise Products	South Carlsbad #1	Run 2	5/24/2012	11:31:58 AM	16.48	86.50	8.85
0181	Enterprise Products	South Carlsbad #1	Run 2	5/24/2012	11:32:28 AM	16.57	86.00	8.35
0181	Enterprise Products	South Carlsbad #1	Run 2	5/24/2012	11:32:58 AM	16.58	86.00	8.35
0181	Enterprise Products	South Carlsbad #1	Run 2	5/24/2012	11:33:28 AM	16.58	85.50	8.85
0181	Enterprise Products	South Carlsbad #1	Run 2	5/24/2012	11:33:58 AM	16.58	85.50	9.35
0181	Enterprise Products	South Carlsbad #1	Run 2	5/24/2012	11:34:28 AM	16.58	85.50	8.85
0181	Enterprise Products	South Carlsbad #1	Run 2	5/24/2012	11:34:58 AM	16.58	86.00	9.35
0181	Enterprise Products	South Carlsbad #1	Run 2	5/24/2012	11:35:28 AM	16.57	85.50	9.35
0181	Enterprise Products	South Carlsbad #1	Run 2	5/24/2012	11:35:58 AM	16.48	85.50	9.35

Project Number	Client	Source	Run Number	Date	Time	O2 (% Vol)	NOX (ppmvd)	CO (ppmvd)
0181	Enterprise Products	South Carlsbad #1	Run 2	5/24/2012	11:36:28 AM	16.48	85.50	9.35
0181	Enterprise Products	South Carlsbad #1	Run 2	5/24/2012	11:36:58 AM	16.48	85.50	9.35
0181	Enterprise Products	South Carlsbad #1	Run 2	5/24/2012	11:37:28 AM	16.58	85.50	8.85
0181	Enterprise Products	South Carlsbad #1	Run 2	5/24/2012	11:37:58 AM	16.57	85.50	8.85
0181	Enterprise Products	South Carlsbad #1	Run 2	5/24/2012	11:38:28 AM	16.58	85.50	9.35
0181	Enterprise Products	South Carlsbad #1	Run 2	5/24/2012	11:38:58 AM	16.58	85.00	9.35
0181	Enterprise Products	South Carlsbad #1	Run 2	5/24/2012	11:39:28 AM	16.57	85.50	9.35
0181	Enterprise Products	South Carlsbad #1	Run 2	5/24/2012	11:39:58 AM	16.58	85.50	8.85
0181	Enterprise Products	South Carlsbad #1	Run 2	5/24/2012	11:40:28 AM	16.58	85.00	8.85
0181	Enterprise Products	South Carlsbad #1	Run 2	5/24/2012	11:40:58 AM	16.58	85.00	8.85
0181	Enterprise Products	South Carlsbad #1	Run 2	5/24/2012	11:41:28 AM	16.48	85.00	8.85
0181	Enterprise Products	South Carlsbad #1	Run 2	5/24/2012	11:41:58 AM	16.48	85.00	8.85
0181	Enterprise Products	South Carlsbad #1	Run 2	5/24/2012	11:42:28 AM	16.58	85.00	9.35
0181	Enterprise Products	South Carlsbad #1	Run 2	5/24/2012	11:42:58 AM	16.58	85.50	9.35
0181	Enterprise Products	South Carlsbad #1	Run 2	5/24/2012	11:43:28 AM	16.57	85.50	9.35
0181	Enterprise Products	South Carlsbad #1	Run 2	5/24/2012	11:43:58 AM	16.48	85.50	9.35
0181	Enterprise Products	South Carlsbad #1	Run 2	5/24/2012	11:44:28 AM	16.58	85.50	9.35
0181	Enterprise Products	South Carlsbad #1	Run 2	5/24/2012	11:44:58 AM	16.57	85.50	9.35
0181	Enterprise Products	South Carlsbad #1	Run 2	5/24/2012	11:45:28 AM	16.58	85.50	9.85
0181	Enterprise Products	South Carlsbad #1	Run 2	5/24/2012	11:45:58 AM	16.58	85.50	9.35
0181	Enterprise Products	South Carlsbad #1	Run 2	5/24/2012	11:46:28 AM	16.58	85.50	9.35
0181	Enterprise Products	South Carlsbad #1	Run 2	5/24/2012	11:46:58 AM	16.58	85.50	9.85
0181	Enterprise Products	South Carlsbad #1	Run 2	5/24/2012	11:47:28 AM	16.58	85.00	8.85
0181	Enterprise Products	South Carlsbad #1	Run 2	5/24/2012	11:47:58 AM	16.58	85.50	8.30
0181	Enterprise Products	South Carlsbad #1	Run 2	5/24/2012	11:48:28 AM	16.58	85.00	8.35
0181	Enterprise Products	South Carlsbad #1	Run 2	5/24/2012	11:48:58 AM	16.58	85.00	8.85
0181	Enterprise Products	South Carlsbad #1	Run 2	5/24/2012	11:49:28 AM	16.58	85.50	8.85
0181	Enterprise Products	South Carlsbad #1	Run 2	5/24/2012	11:49:58 AM	16.57	85.50	8.85
0181	Enterprise Products	South Carlsbad #1	Run 2	5/24/2012	11:50:28 AM	16.58	85.50	8.85
0181	Enterprise Products	South Carlsbad #1	Run 2	5/24/2012	11:50:58 AM	16.58	85.00	8.85
0181	Enterprise Products	South Carlsbad #1	Run 2	5/24/2012	11:51:28 AM	16.58	85.00	9.35
0181	Enterprise Products	South Carlsbad #1	Run 2	5/24/2012	11:51:58 AM	16.58	85.50	8.85
0181	Enterprise Products	South Carlsbad #1	Run 2	5/24/2012	11:52:28 AM	16.58	85.50	9.35
0181	Enterprise Products	South Carlsbad #1	Run 2	5/24/2012	11:52:58 AM	16.58	85.50	9.85
		Run Averages				16.54	83.07	9.25
0181	Enterprise Products	South Carlsbad #1		5/24/2012	11:53:28 AM	***20.80***	***0.50***	***0.00***
0181	Enterprise Products	South Carlsbad #1		5/24/2012	11:53:58 AM	20.80	0.00	0.00
0181	Enterprise Products	South Carlsbad #1		5/24/2012	11:54:28 AM	***0.00***	***90.40***	***99.35***
0181	Enterprise Products	South Carlsbad #1		5/24/2012	11:54:45 AM	0.00	90.40	99.35
0181	Enterprise Products	South Carlsbad #1	Run 3	5/24/2012	11:55:15 AM	16.58	85.50	8.35
0181	Enterprise Products	South Carlsbad #1	Run 3	5/24/2012	11:55:45 AM	16.58	85.50	8.85
0181	Enterprise Products	South Carlsbad #1	Run 3	5/24/2012	11:56:15 AM	16.58	85.50	8.95
0181	Enterprise Products	South Carlsbad #1	Run 3	5/24/2012	11:56:45 AM	16.58	85.50	8.85
0181	Enterprise Products	South Carlsbad #1	Run 3	5/24/2012	11:57:15 AM	16.57	85.50	9.85
0181	Enterprise Products	South Carlsbad #1	Run 3	5/24/2012	11:57:45 AM	16.58	85.50	9.35
0181	Enterprise Products	South Carlsbad #1	Run 3	5/24/2012	11:58:15 AM	16.48	85.50	9.35
0181	Enterprise Products	South Carlsbad #1	Run 3	5/24/2012	11:58:45 AM	16.58	85.50	9.35
0181	Enterprise Products	South Carlsbad #1	Run 3	5/24/2012	11:59:15 AM	16.48	85.50	8.85
0181	Enterprise Products	South Carlsbad #1	Run 3	5/24/2012	11:59:45 AM	16.48	85.50	9.35
0181	Enterprise Products	South Carlsbad #1	Run 3	5/24/2012	12:00:15 PM	16.57	85.45	8.35
0181	Enterprise Products	South Carlsbad #1	Run 3	5/24/2012	12:00:45 PM	16.58	85.50	8.35
0181	Enterprise Products	South Carlsbad #1	Run 3	5/24/2012	12:01:15 PM	16.58	85.50	8.85
0181	Enterprise Products	South Carlsbad #1	Run 3	5/24/2012	12:01:45 PM	16.48	85.50	8.85
0181	Enterprise Products	South Carlsbad #1	Run 3	5/24/2012	12:02:15 PM	16.48	85.00	8.85
0181	Enterprise Products	South Carlsbad #1	Run 3	5/24/2012	12:02:45 PM	16.48	85.00	8.35
0181	Enterprise Products	South Carlsbad #1	Run 3	5/24/2012	12:03:15 PM	16.48	85.50	8.30
0181	Enterprise Products	South Carlsbad #1	Run 3	5/24/2012	12:03:45 PM	16.48	85.50	8.85
0181	Enterprise Products	South Carlsbad #1	Run 3	5/24/2012	12:04:15 PM	16.48	85.50	9.35
0181	Enterprise Products	South Carlsbad #1	Run 3	5/24/2012	12:04:45 PM	16.48	85.50	9.85
0181	Enterprise Products	South Carlsbad #1	Run 3	5/24/2012	12:05:15 PM	16.48	85.50	9.35
0181	Enterprise Products	South Carlsbad #1	Run 3	5/24/2012	12:05:45 PM	16.48	85.50	8.85
0181	Enterprise Products	South Carlsbad #1	Run 3	5/24/2012	12:06:15 PM	16.48	86.00	8.85
0181	Enterprise Products	South Carlsbad #1	Run 3	5/24/2012	12:06:45 PM	16.48	86.00	9.35
0181	Enterprise Products	South Carlsbad #1	Run 3	5/24/2012	12:07:15 PM	16.48	86.00	8.85
0181	Enterprise Products	South Carlsbad #1	Run 3	5/24/2012	12:07:45 PM	16.48	86.00	9.35
0181	Enterprise Products	South Carlsbad #1	Run 3	5/24/2012	12:08:15 PM	16.48	86.00	9.35
0181	Enterprise Products	South Carlsbad #1	Run 3	5/24/2012	12:08:45 PM	16.48	86.00	9.35
0181	Enterprise Products	South Carlsbad #1	Run 3	5/24/2012	12:09:15 PM	16.48	86.00	9.35
0181	Enterprise Products	South Carlsbad #1	Run 3	5/24/2012	12:09:45 PM	16.48	86.00	9.35

Project Number	Client	Source	Run Number	Date	Time	O2 (% Vol)	NOX (ppmvd)	CO (ppmvd)
0181	Enterprise Products	South Carlsbad #1	Run 3	5/24/2012	12:10:15 PM	16.48	86.00	9.35
0181	Enterprise Products	South Carlsbad #1	Run 3	5/24/2012	12:10:45 PM	16.48	86.00	9.35
0181	Enterprise Products	South Carlsbad #1	Run 3	5/24/2012	12:11:15 PM	16.48	86.00	9.35
0181	Enterprise Products	South Carlsbad #1	Run 3	5/24/2012	12:11:45 PM	16.48	86.00	9.85
0181	Enterprise Products	South Carlsbad #1	Run 3	5/24/2012	12:12:15 PM	16.48	86.00	9.35
0181	Enterprise Products	South Carlsbad #1	Run 3	5/24/2012	12:12:45 PM	16.48	86.00	8.85
0181	Enterprise Products	South Carlsbad #1	Run 3	5/24/2012	12:13:15 PM	16.48	85.50	8.85
0181	Enterprise Products	South Carlsbad #1	Run 3	5/24/2012	12:13:45 PM	16.48	85.50	8.85
0181	Enterprise Products	South Carlsbad #1	Run 3	5/24/2012	12:14:15 PM	16.48	85.50	8.85
0181	Enterprise Products	South Carlsbad #1	Run 3	5/24/2012	12:14:45 PM	16.48	85.50	9.35
0181	Enterprise Products	South Carlsbad #1	Run 3	5/24/2012	12:15:15 PM	16.48	85.50	9.85
0181	Enterprise Products	South Carlsbad #1	Run 3	5/24/2012	12:15:45 PM	16.48	86.00	9.85
0181	Enterprise Products	South Carlsbad #1	Run 3	5/24/2012	12:16:15 PM	16.48	86.00	9.35
0181	Enterprise Products	South Carlsbad #1	Run 3	5/24/2012	12:16:45 PM	16.48	86.50	9.35
0181	Enterprise Products	South Carlsbad #1	Run 3	5/24/2012	12:17:15 PM	16.48	86.00	8.85
0181	Enterprise Products	South Carlsbad #1	Run 3	5/24/2012	12:17:45 PM	16.48	86.00	9.35
0181	Enterprise Products	South Carlsbad #1	Run 3	5/24/2012	12:18:15 PM	16.48	85.50	9.35
0181	Enterprise Products	South Carlsbad #1	Run 3	5/24/2012	12:18:45 PM	16.48	86.00	8.85
0181	Enterprise Products	South Carlsbad #1	Run 3	5/24/2012	12:19:15 PM	16.48	86.00	9.35
0181	Enterprise Products	South Carlsbad #1	Run 3	5/24/2012	12:19:45 PM	16.48	86.00	8.85
0181	Enterprise Products	South Carlsbad #1	Run 3	5/24/2012	12:20:15 PM	16.48	86.00	8.85
0181	Enterprise Products	South Carlsbad #1	Run 3	5/24/2012	12:20:45 PM	16.48	86.00	9.35
0181	Enterprise Products	South Carlsbad #1	Run 3	5/24/2012	12:21:15 PM	16.48	86.00	8.35
0181	Enterprise Products	South Carlsbad #1	Run 3	5/24/2012	12:21:45 PM	16.48	86.00	8.35
0181	Enterprise Products	South Carlsbad #1	Run 3	5/24/2012	12:22:15 PM	16.48	86.00	8.85
0181	Enterprise Products	South Carlsbad #1	Run 3	5/24/2012	12:22:45 PM	16.48	85.50	8.85
0181	Enterprise Products	South Carlsbad #1	Run 3	5/24/2012	12:23:15 PM	16.48	86.00	8.85
0181	Enterprise Products	South Carlsbad #1	Run 3	5/24/2012	12:23:45 PM	16.48	86.00	8.85
0181	Enterprise Products	South Carlsbad #1	Run 3	5/24/2012	12:24:15 PM	16.48	86.00	8.35
0181	Enterprise Products	South Carlsbad #1	Run 3	5/24/2012	12:24:45 PM	16.48	86.00	8.85
0181	Enterprise Products	South Carlsbad #1	Run 3	5/24/2012	12:25:15 PM	16.48	86.00	8.85
0181	Enterprise Products	South Carlsbad #1	Run 3	5/24/2012	12:25:45 PM	16.48	86.00	8.85
0181	Enterprise Products	South Carlsbad #1	Run 3	5/24/2012	12:26:15 PM	16.48	86.00	8.85
0181	Enterprise Products	South Carlsbad #1	Run 3	5/24/2012	12:26:45 PM	16.48	86.00	8.85
0181	Enterprise Products	South Carlsbad #1	Run 3	5/24/2012	12:27:15 PM	16.48	86.00	9.35
0181	Enterprise Products	South Carlsbad #1	Run 3	5/24/2012	12:27:45 PM	16.48	86.00	8.85
0181	Enterprise Products	South Carlsbad #1	Run 3	5/24/2012	12:28:15 PM	16.48	86.00	8.30
0181	Enterprise Products	South Carlsbad #1	Run 3	5/24/2012	12:28:45 PM	16.48	86.00	8.85
0181	Enterprise Products	South Carlsbad #1	Run 3	5/24/2012	12:29:15 PM	16.48	86.00	8.85
0181	Enterprise Products	South Carlsbad #1	Run 3	5/24/2012	12:29:45 PM	16.48	86.00	8.85
0181	Enterprise Products	South Carlsbad #1	Run 3	5/24/2012	12:30:15 PM	16.48	86.00	8.30
0181	Enterprise Products	South Carlsbad #1	Run 3	5/24/2012	12:30:45 PM	16.48	85.50	8.85
0181	Enterprise Products	South Carlsbad #1	Run 3	5/24/2012	12:31:15 PM	16.48	86.00	8.85
0181	Enterprise Products	South Carlsbad #1	Run 3	5/24/2012	12:31:45 PM	16.48	85.50	9.85
0181	Enterprise Products	South Carlsbad #1	Run 3	5/24/2012	12:32:15 PM	16.48	86.00	8.85
0181	Enterprise Products	South Carlsbad #1	Run 3	5/24/2012	12:32:45 PM	16.48	85.50	8.35
0181	Enterprise Products	South Carlsbad #1	Run 3	5/24/2012	12:33:15 PM	16.48	86.00	8.35
0181	Enterprise Products	South Carlsbad #1	Run 3	5/24/2012	12:33:45 PM	16.48	86.00	8.85
0181	Enterprise Products	South Carlsbad #1	Run 3	5/24/2012	12:34:15 PM	16.48	86.00	8.85
0181	Enterprise Products	South Carlsbad #1	Run 3	5/24/2012	12:34:45 PM	16.48	86.00	8.85
0181	Enterprise Products	South Carlsbad #1	Run 3	5/24/2012	12:35:15 PM	16.48	86.00	9.35
0181	Enterprise Products	South Carlsbad #1	Run 3	5/24/2012	12:35:45 PM	16.48	86.00	9.85
0181	Enterprise Products	South Carlsbad #1	Run 3	5/24/2012	12:36:15 PM	16.48	86.00	8.85
0181	Enterprise Products	South Carlsbad #1	Run 3	5/24/2012	12:36:45 PM	16.48	86.00	9.35
0181	Enterprise Products	South Carlsbad #1	Run 3	5/24/2012	12:37:15 PM	16.48	86.00	9.85
0181	Enterprise Products	South Carlsbad #1	Run 3	5/24/2012	12:37:45 PM	16.48	86.00	9.85
0181	Enterprise Products	South Carlsbad #1	Run 3	5/24/2012	12:38:15 PM	16.48	86.00	9.35
0181	Enterprise Products	South Carlsbad #1	Run 3	5/24/2012	12:38:45 PM	16.48	86.50	9.35
0181	Enterprise Products	South Carlsbad #1	Run 3	5/24/2012	12:39:15 PM	16.48	86.00	9.35
0181	Enterprise Products	South Carlsbad #1	Run 3	5/24/2012	12:39:45 PM	16.48	86.00	8.35
0181	Enterprise Products	South Carlsbad #1	Run 3	5/24/2012	12:40:15 PM	16.48	86.50	8.85
0181	Enterprise Products	South Carlsbad #1	Run 3	5/24/2012	12:40:45 PM	16.48	86.50	10.30
0181	Enterprise Products	South Carlsbad #1	Run 3	5/24/2012	12:41:15 PM	16.48	86.50	9.85
0181	Enterprise Products	South Carlsbad #1	Run 3	5/24/2012	12:41:45 PM	16.48	86.00	9.35
0181	Enterprise Products	South Carlsbad #1	Run 3	5/24/2012	12:42:15 PM	16.48	86.50	9.35
0181	Enterprise Products	South Carlsbad #1	Run 3	5/24/2012	12:42:45 PM	16.48	86.50	10.85
0181	Enterprise Products	South Carlsbad #1	Run 3	5/24/2012	12:43:15 PM	16.48	86.50	9.35
0181	Enterprise Products	South Carlsbad #1	Run 3	5/24/2012	12:43:45 PM	16.48	86.50	8.85
0181	Enterprise Products	South Carlsbad #1	Run 3	5/24/2012	12:44:15 PM	16.48	86.50	8.35

Project Number	Client	Source	Run Number	Date	Time	O2 (% Vol)	NOX (ppmvd)	CO (ppmvd)
0181	Enterprise Products	South Carlsbad #1	Run 3	5/24/2012	12:44:45 PM	16.48	86.00	8.85
0181	Enterprise Products	South Carlsbad #1	Run 3	5/24/2012	12:45:15 PM	16.48	86.00	8.85
0181	Enterprise Products	South Carlsbad #1	Run 3	5/24/2012	12:45:45 PM	16.48	85.50	9.85
0181	Enterprise Products	South Carlsbad #1	Run 3	5/24/2012	12:46:15 PM	16.48	86.00	8.85
0181	Enterprise Products	South Carlsbad #1	Run 3	5/24/2012	12:46:45 PM	16.48	86.00	9.35
0181	Enterprise Products	South Carlsbad #1	Run 3	5/24/2012	12:47:15 PM	16.48	86.00	8.85
0181	Enterprise Products	South Carlsbad #1	Run 3	5/24/2012	12:47:45 PM	16.48	86.00	9.85
0181	Enterprise Products	South Carlsbad #1	Run 3	5/24/2012	12:48:15 PM	16.48	86.50	9.35
0181	Enterprise Products	South Carlsbad #1	Run 3	5/24/2012	12:48:45 PM	16.48	86.50	8.85
0181	Enterprise Products	South Carlsbad #1	Run 3	5/24/2012	12:49:15 PM	16.48	86.50	8.85
0181	Enterprise Products	South Carlsbad #1	Run 3	5/24/2012	12:49:45 PM	16.48	87.00	8.35
0181	Enterprise Products	South Carlsbad #1	Run 3	5/24/2012	12:50:15 PM	16.48	86.50	8.35
0181	Enterprise Products	South Carlsbad #1	Run 3	5/24/2012	12:50:45 PM	16.48	86.50	9.35
0181	Enterprise Products	South Carlsbad #1	Run 3	5/24/2012	12:51:15 PM	16.48	86.50	8.35
0181	Enterprise Products	South Carlsbad #1	Run 3	5/24/2012	12:51:45 PM	16.48	86.50	8.35
0181	Enterprise Products	South Carlsbad #1	Run 3	5/24/2012	12:52:15 PM	16.48	86.50	8.85
0181	Enterprise Products	South Carlsbad #1	Run 3	5/24/2012	12:52:45 PM	16.48	86.50	8.85
0181	Enterprise Products	South Carlsbad #1	Run 3	5/24/2012	12:53:15 PM	16.48	86.50	8.85
0181	Enterprise Products	South Carlsbad #1	Run 3	5/24/2012	12:53:45 PM	16.48	86.00	9.35
0181	Enterprise Products	South Carlsbad #1	Run 3	5/24/2012	12:54:15 PM	16.48	86.50	9.35
0181	Enterprise Products	South Carlsbad #1	Run 3	5/24/2012	12:54:45 PM	16.48	86.00	8.85
		Run Averages				16.48	85.95	9.06
0181	Enterprise Products	South Carlsbad #1		5/24/2012	12:55:16 PM	16.48	86.50	8.85
0181	Enterprise Products	South Carlsbad #1		5/24/2012	12:55:46 PM	16.48	86.50	8.85
0181	Enterprise Products	South Carlsbad #1		5/24/2012	12:56:16 PM	-0.01	90.21	99.35
0181	Enterprise Products	South Carlsbad #1		5/24/2012	12:56:46 PM	***-0.01***	***90.21***	***99.45***
0181	Enterprise Products	South Carlsbad #1		5/24/2012	12:57:16 PM	19.99	0.50	5.90
0181	Enterprise Products	South Carlsbad #1		5/24/2012	12:57:46 PM	20.90	0.00	0.00
0181	Enterprise Products	South Carlsbad #1		5/24/2012	12:58:16 PM	***20.90***	***0.00***	***0.00***
0181	Enterprise Products	South Carlsbad #1		5/24/2012	12:58:46 PM	20.48	0.00	0.00
0181	Enterprise Products	South Carlsbad #1		5/24/2012	12:59:16 PM	20.48	0.00	0.00
0181	Enterprise Products	South Carlsbad #1		5/24/2012	12:59:46 PM	20.48	0.00	0.00
0181	Enterprise Products	South Carlsbad #1		5/24/2012	1:00:16 PM	20.48	-0.50	0.00

SPECIALTY GASES OF AMERICA, INC.
AMERICAN INDUSTRIAL GASES, INC.
AMERICAN RARE GASES, INC

6055 BRENT DR. TOLEDO, OH 43611
419-729-7732 FAX 419-729-2411

THE AMERICAN GAS GROUP
www.americangasgroup.com

ANALYTICAL REPORT

Certificate ID: 110711019 **Date:** 11/7/2011

Customer Name: B&J Welding Supply, TX

Customer Address: 1512 East 50th Street

Lubbock TX 79404

Purchase Order: 17436 **Work Order:** 127416-01

Lot Number: 1024UB11 **Product Name:** 3-Component Mixture, EPA Protocol

Size: A31 **Pressure:** 2210 psig @ 84 Deg F

Content: Ven ID# C12011

Serial #: EB0002836

Analysis Date: 11/2/2011

Shelf Life: 36 months **Expiration Date:** 11/2/2014

Component	Nominal	Actual	Accuracy	Method
Oxygen	12.0%	11.7%	+/- 1% rel	Paramagnetic
Carbon Dioxide	12.0%	12.2%	+/- 1% rel	FTIR
Nitrogen	Balance	Balance		

REFERENCE STANDARD

Std Type	Std #	Cyl #	Concentration	Exp Date
GMIS	0606JG11	EB0001508	15.1500	6/7/2013
GMIS	0625HE10	EB0023062	19.8500	6/28/2012

INSTRUMENTATION

Instrument / ID	Component
Servomex 5200	O2
MKS 2031	CO2

Note: * ANALYZED ACCORDING TO EPA TRACEABILITY PROTOCOL FOR ASSAY AND CERTIFICATION OF GASEOUS CALIBRATION STANDARDS - SEPTEMBER 1997:G1
* DO NOT USE STANDARD WHEN PRESSURE IS BELOW 150 PSIG

Protocal
Specialty Gases of America, Inc

Issued by: Josh Jones

SPECIALTY GASES OF AMERICA, INC.
AMERICAN INDUSTRIAL GASES, INC.
AMERICAN RARE GASES, INC

6055 BRENT DR. TOLEDO, OH 43611
419-729-7732 FAX 419-729-2411

THE AMERICAN GAS GROUP

www.americangasgroup.com

ANALYTICAL REPORT

Certificate ID: 110711012 **Date:** 11/7/2011

Customer Name: B&J Welding Supply, TX

Customer Address: 1512 East 50th Street

Lubbock TX 79404

Purchase Order: 17436 **Work Order:** 127416-03

Lot Number: 1024UA11 **Product Name:** 3-Component Mixture, EPA Protocol

Size: A31 **Pressure:** 2220 psig @ 82 Deg F

Content: Ven ID# C12011

Serial #: EB0004610

Analysis Date: 11/2/2011

Shelf Life: 36 months **Expiration Date:** 11/2/2014

Component	Nominal	Actual	Accuracy	Method
Oxygen	20.9%	20.9%	+/- 1% rel	Paramagnetic
Carbon Dioxide	5.00%	5.10%	+/- 1% rel	FTIR
Nitrogen	Balance	Balance		

REFERENCE STANDARD

Std Type	Std #	Cyl #	Concentration	Exp Date
GMIS	0318XA11	EB0028214	20.9700	3/18/2013
GMIS	0625HE10	EB0023062	19.8500	6/28/2012

INSTRUMENTATION

Instrument / ID	Component
Servomex 5200	O2
MKS 2031	CO2

Note: * ANALYZED ACCORDING TO EPA TRACEABILITY PROTOCOL FOR ASSAY AND CERTIFICATION OF GASEOUS CALIBRATION STANDARDS - SEPTEMBER 1997:G1
* DO NOT USE STANDARD WHEN PRESSURE IS BELOW 150 PSIG

Protocal
Specialty Gases of America, Inc

Issued by: Josh Jones

Global Calibration Gases LLC
1500 15th Avenue Drive East,
#109
Palmetto, FL 34221
Blending Plant &
Analytical Laboratory
Accreditation No: 69191
PGVP Vendor ID: N12011

EPA PROTOCOL GAS MIXTURE

Customer:	B&J Specialty Gas	Reference#:	011612 - 2
CGA:	660	Certification Date:	1/16/12
Customer PO #:		Expiration Date:	1/16/14
Cylinder #:	EB0034805	Pressure, psig:	2000

Method: This standard was analyzed according to EPA Traceability Protocol for Assay and Certification of Gaseous Calibration Standards, Procedure G1 (September 1997).

ANALYZED CYLINDER --

Components	Certified Concentration	Analytical Accuracy
NO	90.0 ppm	± 1 %
NOx	> 1 %	± 1 %
Propane	105.0 ppm	± 1 %
Methane	109.0 ppm	± 1 %
Carbon Monoxide	99.0 ppm	± 1 %
Nitrogen	BALANCE	-

REFERENCE STANDARD -

Type/SRM Sample	Cylinder#	Concentration
NO/ SRM 2735	Cal015838	784.4 ppm
NOx/ SRM 2735	Cal015838	787.5 ppm
Propane/ GMIS	EB0026425	310.9 ppm
Methane/ GMIS	EB0019166	94.6 ppm
CO/ GMIS	CC118813	95.5 ppm

INSTRUMENT -

Instrument/Model	Serial #	Last Date Calibrated	Analytical Method
California Analytical Instrument Model 600	Y09003	1/5/12	Chemiluminescence
Agilent	US02002031	1/10/12	Thermal conductivity

These mixtures were prepared gravimetrically using a high load high sensitivity electronic scale. Prior to filling the scale is verified for accuracy throughout the target mass range against applicable NIST traceable weights. We certify that the weights are calibrated to ASTM E617-97 Class 1 tolerances. This calibration is referenced by serial # 7210-1, Certificate # 511635 and NIST Inst # 822/272103-06. This report states accurately the results of the investigation made upon the material submitted to the analytical laboratory. Every effort has been made to determine objectively the information requested. However, in connection with this report, Global Calibration Gases LLC shall have no liability in excess of the established charge for this service. Assayed at Global Calibration Gases LLC, Palmetto, Florida. *Do not use this standard when cylinder pressure is below 150 psig.

Principal Analyst: _____ Reviewer: _____

Date: 1/16/12 Date: 1-16-2012

B&J Welding Supply
Lamesa, Tx

Accreditation No 69191

PGVP Vendor ID N12012

EPA Protocol Gas Mixture

Customer:	B&J Welding Supply	Reference#:	011112-1
CGA:	660	Certification Date:	01/11/2012
Customer PO#	17784	Expiration Date:	01/11/2014
Cylinder #:	EB0032807	Pressure, psig:	2000

Method: This standard was analyzed according to EPA Traceability Protocol for Assay and Certification of Gaseous Calibration Standards, Procedure G1 (September 1997)

Analyzed Cylinder-

Components	Certified Concentration	Analytical Accuracy
Nitric Oxide	251.4 ppm	+/-1%
NOx	<1%	+/-1%
Carbon Monoxide	257 ppm	+/-1%
Methane	248.6 ppm	+/-1%
Propane	251.6 ppm	+/-1%
Nitrogen	Balance	-

Reference Standard-

Type/SRM Sample	Cylinder #	Concentration
NO/SRM 2735	Cal015838	784.4 ppm
Nox/ SRM 2735	Cal015838	787.5 ppm
CO/ GMIS	EB0019151	1.96%
Propane/ GMIS	CC80936	2984 ppm
Methane/ GMIS	EB0026384	148.3 ppm

Instrument-

Instrument/ Model	Serial Number	Last Date Calibrated	Analytical Method
California Analytical Instument Model 600	Y09003	01/06/2012	Chemiluminescence
Agilent Quad Series	US02002031	01/11/12	Thermal Conductivity
Rosemount 880A	F-04300088	01/04/2012	Non-Dispersive Infrared

These mixtures were prepared gravimetrically using a high load high sensitivity electronic scale. Prior to filling the scale is verified for accuracy throughout the target mass range against applicable NIST traceable weights.

We certify that the weights are calibrated to ASTM E617-97 Class 1 tolerances. This calibration is referenced by serial # 7210-1, Certificate # 511635 and NIST Inst # 822/272103-06.

This report states accurately the results of the investigation made upon the material submitted to the analytical laboratory. Every effort has been made to determine objectively the information requested. However, in connection with this report, Global Calibration Gases LLC shall have no liability in excess of the established charge for this service. Assayed at Global Calibration Gases LLC, Palmetto, Florida.

*Do not use this standard when cylinder pressure is below 150 psig.

Produced by:

Global Calibration Gases LLC.
1500 15th Avenue Drive, East Suite# 109
Palmetto, Florida 34221
Accreditation No.: 69191
PGVP Vendor ID.: N12012

Principal Analyst: _____ **Date:** 1-11-12

Principal Reviewer: _____ **Date:** 1-11-12

Annual Turbine Emissions Test Report

On
Exhaust Emissions
From

One Natural Gas Fired Turbine

at the
South Carlsbad Compressor Station
Loving, NM

Prepared For
Enterprise Products Operating

May 2012

Relient Emissions Testing, Inc
Project Number: 0181

Relient Emissions Testing Inc.
Air Emissions Testing for Industry®

Mr. Jim Heap
Enterprise Products, LLC
(432) 686-5404
Midland, TX

May 20, 2012

Re: Annual emissions testing at the South Carlsbad Compressor Station on Unit 2

Mr. Heap,

Exhaust emissions from one compressor turbine was tested at the South Carlsbad compressor station near Loving, New Mexico on. Testing was conducted to demonstrate compliance with emission limits set forth by NMED permit. The engine is identified as follows:

Engine Information	
Unit Number:	Unit 2
Manufacturer:	Solar
Serial Number:	3001096
Model:	CENTAUR 40
Mfr. Rated Hp:	4500hp
Mfr. Rated Speed:	15,000

This is a natural gas fired turbine used for compression of natural gas for transportation through the pipeline.

The test matrix consisted of three 60-minute test runs on the turbine in accordance with NMED requirements. For each test, the average emission concentrations of nitrogen oxides (NO_X), oxygen (O_2), and carbon monoxide (CO) were measured using analytical instrumentation. Operational data such as Gas Producer Speed, Turbine Speed, and suction and discharge pressures were recorded during each run from available operational data on the unit.

Results of the tests are presented in tabular format in this report. Included in this table are engine operational data, ambient conditions, emission concentrations, and mass emission rates.

Continuous emission monitors housed in an air-conditioned mobile laboratory were used to measure the exhaust concentrations of NO_X, CO and O_2. This testing utilized the following analytical methods:

EPA Reference Method 3a	O_2 concentration
EPA Reference Method 7e	NO_X concentration
EPA Reference Method 10	CO concentration
EPA Reference Method 19	Mass emission rates

A computerized data recorder was used to record output from the analyzers. The data logger record provides documentation of the emission measurements and the instrument calibrations. The data logger records are also useful for indicating trends in the data.

Mass emission rates were calculated using EPA Method 19 calculations (combustion stoichiometry). Emission rates in terms of lbs/hr and TPY were calculated using the pollutant concentration (ppmv), the oxygen F-factor (DSCFex/MMBtu) and the horsepower specific fuel consumption rate (Btu/Hp-hr). The O_2 F-Factor used in this test series was 8710 (DSCFex/MMBtu), the EPA default value for engines burning natural gas.

A summary of the quality assurance procedures associated with the EPA test methods is presented in tabular format in the appendix of this report. Examples of these procedures include daily multipoint calibrations, zero and span checks between each test run, NO_2 to NO converter efficiency check results, sample system bias check results, and analyzer interference test results.

The appendix of this report also includes supporting test documentation, example calculations, and data logger records.

If you have any questions, please feel free to contact me at (806) 773-8851.

Sincerely,



Ross Thompson
Principal Scientist
Relient Emissions Testing, Inc

APPENDIX

Summary of Results
Quality Assurance/Quality Control Summary
Example Calculations
Calibration Certifications
Data Logger Files

Summary of Results

Company: Enterprise Products Operating
Location: South Carlsbad Compressor Station
Source: Solar Centaur 40 S/N: 30010096
Engine Rating: 4500hp @ 15000RPM
Technician: RAT

Test Run Number	**1**	**2**	**3**	
Unit	**2**	**2**	**2**	
Date	4/20/2010	4/20/2010	4/20/2010	
Start Time	12:02	13:04	14:07	
Stop Time	12:22	13:24	14:27	
Unit Operational Data				
Engine Speed (rpm)	15000	15000	15000	
Unit Horse Power (Hp)*	4320	4320	4320	
NPT Load (%)	93.0	93.0	93.0	
NGP Load (%)	96.0	96.0	96.0	
Compressor Suction Pressure (psig)	225	225	225	
Compressor Discharge Pressure (psig)	382	382	382	
T5 Temperature (°F)	1190	1190	1190	
PCD (psig)	93.0	93.0	93.0	
Fuel Data				
Calculated Fuel Consumption (SCFH)	34000	34000	34000	
O2 F-Factor (DSCF/MMBtu, HHV basis)	8710	8710	8710	
Fuel Heating Value (Btu/SCF, HHV basis)	1093	1093	1093	
BHp Specific Fuel Rate (Btu/Hp-hr, HHV basis)	8602	8602	8602	
BHp Specific Fuel Rate (Btu/Hp-hr, LHV basis)	7750	7750	7750	
Ambient Conditions				
Pressure Altitude (MSL)	3250	3250	3250	
Atmospheric Pressure ("Hg)	26.60	26.60	26.60	
Dry Bulb Temperature (°F)	87	86	86	
Wet Bulb Temperature (°F)	65	64	64	
Humidity (lb/lb air)	0.0095	0.0090	0.0090	
Measured Exhaust Emissions (Corrected)				**Average**
O_2 (% Vol)	16.28	16.32	16.29	**16.30**
NOx (ppmv)	86.22	86.64	85.20	**86.02**
CO (ppmv)	9.60	9.51	9.67	**9.6**
Exhaust Flow Rate (DSCFH)				
Dry SCFH (dry basis, calc. from Hp/BSFR/HHV)	1.46E+06	1.48E+06	1.47E+06	**1469592.84**
Calculated Mass Emission Rates (Based on btu Specific Fuel Rate BSFR)				
NOx (lbs/hr) {Permit Limit = 27}	15.0	15.2	14.9	**15.03**
CO (lbs/hr) {Permit Limit = 7.4}	1.0	1.0	1.0	**1.00**

*Based on gas producer speed.

Quality Assurance

Method 7E Non-Dilution Measurement System Performance Test Procedures
Method 7E Calculated Emission Gas Concentration

Project No.: 0023
Technician: RAT

Date: 04/20/10
Client: Enterprise Products Operating
Location: South Carlsbad Compressor Station

Calibration Gas Certified Values							Gas Selection, % of Span	
	Span	Low Gas	Mid Gas	High Gas	Analyzer	Analyzer Serial Number	Low (<20%)	Mid (40%-60%)
O_2 (% Vol)	20.90	0.00	11.70	20.90	AII GPR-29	001666832	0.0%	56.0%
NOx (ppmv)	251.40	0.00	90.00	251.40	TECO 42C	030400000000842	0.0%	35.8%
CO (ppmv)	257.00	0.00	99.00	257.00	TECO 48C	48C-67940-359	0.0%	38.5%

Initial Linearity Data

Calibration Error	Analyzer Calibration Response			Absolute Difference			Difference (% of Span)		
	Low	Mid	High	Low	Mid	High	Low	Mid	High
O_2 (% Vol)	-0.01	11.70	20.87	0.01	0.00	0.03	0.05%	0.00%	0.14%
NOx (ppmv)	-0.05	91.00	251.55	0.05	1.00	0.15	0.02%	0.40%	0.06%
CO (ppmv)	0.00	101.20	255.95	0.00	2.20	1.05	0.00%	0.86%	0.41%

Run Number 1 Start: 12:02 End: 12:22

Bias and Drift	Upscale Gas	Cal. Response		Initial Values		Initial System Bias		Final Values		Final System Bias		Drift		Emission Calculation	
		Low	Upscale	Low	Upscale	Low	Upscale	Low	Upscale	Low	Upscale	Low	Upscale	Raw Avg	Run Avg
O_2 (% Vol)	20.90	-0.01	20.87	-0.01	20.90	0.00%	0.14%	-0.01	20.90	0.00%	0.14%	0.00%	0.00%	16.28	16.28 O_2 (% Vol)
NOx (ppmv)	90.00	-0.05	91.00	0.00	90.21	0.02%	-0.31%	0.00	90.40	0.02%	-0.24%	0.00%	0.08%	86.51	86.22 NOx (ppmv)
CO (ppmv)	99.00	0.00	101.20	0.00	99.45	0.00%	-0.68%	0.00	99.50	0.00%	-0.66%	0.00%	0.02%	9.65	9.60 CO (ppmv)

Run Number 2 Start: 13:04 End: 13:24

Bias and Drift	Upscale Gas	Cal. Response		Initial Values		Initial System Bias		Final Values		Final System Bias		Drift		Emission Calculation	
		Low	Upscale	Low	Upscale	Low	Upscale	Low	Upscale	Low	Upscale	Low	Upscale	Raw Avg	Run Avg
O_2 (% Vol)	20.90	-0.01	20.87	-0.01	20.90	0.00%	0.14%	-0.01	20.85	0.00%	-0.10%	0.00%	-0.24%	16.30	16.32 O_2 (% Vol)
NOx (ppmv)	90.00	-0.05	91.00	0.00	90.40	0.02%	-0.24%	0.00	90.50	0.02%	-0.20%	0.00%	0.04%	87.07	86.64 NOx (ppmv)
CO (ppmv)	99.00	0.00	101.20	0.00	99.50	0.00%	-0.66%	0.00	99.60	0.00%	-0.62%	0.00%	0.04%	9.56	9.51 CO (ppmv)

Run Number 3 Start: 14:07 End: 14:27

Bias and Drift	Upscale Gas	Cal. Response		Initial Values		Initial System Bias		Final Values		Final System Bias		Drift		Emission Calculation	
		Low	Upscale	Low	Upscale	Low	Upscale	Low	Upscale	Low	Upscale	Low	Upscale	Raw Avg	Run Avg
O_2 (% Vol)	20.90	-0.01	20.87	-0.01	20.85	0.00%	-0.10%	-0.01	20.90	0.00%	0.14%	0.00%	0.24%	16.27	16.29 O_2 (% Vol)
NOx (ppmv)	90.00	-0.05	91.00	0.00	90.50	0.02%	-0.20%	0.00	90.20	0.02%	-0.32%	0.00%	-0.12%	85.53	85.20 NOx (ppmv)
CO (ppmv)	99.00	0.00	101.20	0.00	99.60	0.00%	-0.62%	-0.50	99.30	-0.19%	-0.74%	-0.19%	-0.12%	9.49	9.67 CO (ppmv)

Example Calculations

Drift Corrected Emission Concentrations

Formula

$$C_{GAS} = (Ç - Co) \times \frac{C_{MA}}{C_M - C_O} \quad \textit{(eq.7e-5)}$$

All Calculations Refer to Test Run 1 or an Average of Runs 1-3

$Ç_{NOx}$ =	Raw Concentration of NOx	= 86.51 ppmv
C_O =	Avg. of Initial and Final Zero Checks	= 0.00 ppmv
C_M =	Avg. of Initial and Final Span Checks	= 90.31 ppmv
C_{MA} =	Certified Concentration of Span Gas	= 90.00 ppmv

C_{NOx} = (86.51 - 0) x 90 / (90.3 - 0) = 86.22 ppmv

$Ç_{CO}$ =	Raw Concentration of CO	= 9.65 ppmv
C_O =	Avg. of Initial and Final Zero Checks	= 0.00 ppmv
C_M =	Avg. of Initial and Final Span Checks	= 99.48 ppmv
C_{MA} =	Certified Concentration of Span Gas	= 99.00 ppmv

C_{CO} = (9.65 + 0) x 99 / (99.5 + 0) = 9.60 ppmv

$Ç_{O2}$ =	Raw Concentration of O2	= 16.28%
C_O =	Avg. of initial and final zero bias checks	= -0.01%
C_M =	Avg. of initial and final span bias checks	= 20.90%
C_{MA} =	Actual concentration of span gas	= 20.90%

C_{O2} = (16.28 - -0.01) x 20.9 / (20.9 - 0) = 16.28%

Example Calculations

Exhaust Calculations

Measured Data and Constants

C_{NOx} =	Corrected Concentration of NOx	=	86.22	ppmv
C_{CO} =	Corrected Concentration of CO	=	9.60	ppmv
Horsepower =	Observed Horsepower	=	4320	Hp
lb / mole =	EPA STP for Ideal Gas	=	385.15	SCF
lbs / hr to tpy =	Mass Conversion Factor	=	4.38	hrs-tons / lbs-yr
C_F =	PPMV Normalization	=	1 x e-6	1 / ppmv
MW_{NOx} =	Molecular Weight of NOx	=	46	lb / lb-mol
MW_{CO} =	Molecular Weight of CO	=	28	lb / lb-mol

S tack Gas Flow Rate via btu Specific Fuel Rate (BSFR)

Hp =	Engine Horsepower	=	4320	Hp
F_{BTU} =	btu Specific Fuel Rate	=	8602	Btu/Hp-Hr
F_{O2} =	O2 F-Factor	=	8710	DSCF/MMBtu
C_{O2} =	Measured Concentration of O2	=	16.28	%

$$Q_{S\ M19} = Hp \times F_{BTU} \times F_{O2} \times 10\text{^}6 \times \frac{20.9}{(20.9 - \%O2)}$$ DSCF/H

$$Q_{S\ M19} = 4320.00 \times 8602 \times 8710 \times \frac{20.9}{(20.9 - 16.28)} \times 1E\text{-}06$$

$Q_{S\ M19}$ = 1.46E+06 DSCF/H

Formulas

Pounds per Hour (lbs/hr) :

$$E_x\ (lb/hr) = C_x * C_F * Qs * \{ MW_x / (lb / mole) \}$$

Tons per Year (tpy) :

$$E_x\ (tpy) = E_x\ (lb/hr) * \{ 8760\ (hr / yr) / 2000\ (lb / ton) \}$$

Grams per Horsepower-hour (g/Hp-hr) :

$$E_x\ (g/hp\text{-}hr) = \{ E_x\ (lb/hr) / Hp \} / 454\ (g / lb) \}$$

Calculated Mass Emission Rates From Method 19 Exhaust Flow Rates

E_{NOx}

$$\textbf{lbs/hr} = 86.22 * 1 \text{ x e-6} * 1.46E+06 * \frac{46}{385.15} = \textbf{15.08}$$

$$\textbf{tpy} = 15.08\ lb/hr * 4.38 \frac{hrs\text{-}ton}{lbs\text{-}yr} = \textbf{66.04}$$

$$\textbf{g/Hp-hr} = \frac{15.08\ lb/hr}{4320\ Hp} * \frac{454\ g}{1\ lb} = \textbf{1.58}$$

E_{CO}

$$\textbf{lbs/hr} = 9.60 * 1 \text{ x e-6} * 1.46E+06 * \frac{28}{385.15} = \textbf{1.02}$$

$$\textbf{tpy} = 1.02\ lb/hr * 4.38 \frac{hrs\text{-}ton}{lbs\text{-}yr} = \textbf{4.48}$$

$$\textbf{g/Hp-hr} = \frac{1.02\ lb/hr}{4320\ Hp} * \frac{454\ g}{1\ lb} = \textbf{0.11}$$

Project Number	Client	Source	Run Number	Date	Time	O2 (% Vol)	NOX (ppmvd)	CO (ppmvd)
0181	Enterprise Products			5/24/2012	8:52:04 AM	0.18	0.00	0.00
0181	Enterprise Products			5/24/2012	8:53:04 AM	-0.01	0.00	0.00
0181	Enterprise Products			5/24/2012	8:54:04 AM	-0.01	0.00	0.00
0181	Enterprise Products			5/24/2012	8:55:04 AM	-0.01	0.00	0.00
0181	Enterprise Products			5/24/2012	8:56:04 AM	-0.01	-0.05	0.00
0181	Enterprise Products			5/24/2012	8:57:04 AM	-0.01	-0.05	0.00
0181	Enterprise Products			5/24/2012	8:58:04 AM	-0.01	-0.05	0.00
0181	Enterprise Products			5/24/2012	8:59:04 AM	-0.01	0.00	0.00
0181	Enterprise Products			5/24/2012	9:00:04 AM	-0.01	0.00	0.00
0181	Enterprise Products			5/24/2012	9:01:04 AM	-0.01	0.00	-0.05
0181	Enterprise Products			5/24/2012	9:02:04 AM	-0.01	-0.05	0.00
0181	Enterprise Products			5/24/2012	9:03:04 AM	-0.01	-0.05	0.00
0181	Enterprise Products			5/24/2012	9:04:04 AM	-0.01	0.00	0.00
0181	Enterprise Products			5/24/2012	9:05:04 AM	-0.01	0.00	0.00
0181	Enterprise Products			5/24/2012	9:06:04 AM	***-0.01***	***-0.05***	***0.00***
0181	Enterprise Products			5/24/2012	9:07:04 AM	-0.01	-0.05	0.90
0181	Enterprise Products			5/24/2012	9:08:04 AM	21.16	70.00	255.45
0181	Enterprise Products			5/24/2012	9:09:04 AM	***20.87***	90.50	***255.95***
0181	Enterprise Products			5/24/2012	9:10:04 AM	12.19	***91.00***	***101.20***
0181	Enterprise Products			5/24/2012	9:11:04 AM	11.70	251.44	38.00
0181	Enterprise Products			5/24/2012	9:12:04 AM	***11.70***	***251.55***	0.00
0181	Enterprise Products			5/24/2012	9:13:04 AM	11.70	76.95	0.00
0181	Enterprise Products			5/24/2012	9:14:04 AM	11.80	-0.50	-0.05
0181	Enterprise Products			5/24/2012	9:15:04 AM	11.80	-0.50	-0.05
0181	Enterprise Products			5/24/2012	9:16:04 AM	11.80	218.10	0.00
0181	Enterprise Products			5/24/2012	9:17:04 AM	11.90	254.10	0.00
0181	Enterprise Products			5/24/2012	9:18:04 AM	11.90	128.50	0.00
0181	Enterprise Products			5/24/2012	9:19:04 AM	11.90	28.45	0.00
0181	Enterprise Products			5/24/2012	9:20:04 AM	11.90	418.70	0.00
0181	Enterprise Products			5/24/2012	9:21:04 AM	11.90	499.75	-0.05
0181	Enterprise Products			5/24/2012	9:22:04 AM	11.90	300.15	0.00
0181	Enterprise Products			5/24/2012	9:23:04 AM	11.99	104.50	0.00
0181	Enterprise Products			5/24/2012	9:24:04 AM	12.00	89.50	0.00
0181	Enterprise Products			5/24/2012	9:25:04 AM	12.00	89.00	0.00
0181	Enterprise Products			5/24/2012	9:26:04 AM	12.00	19.95	-0.05
0181	Enterprise Products			5/24/2012	9:27:04 AM	12.00	5.95	0.00
0181	Enterprise Products			5/24/2012	9:28:04 AM	12.00	4.95	0.00
0181	Enterprise Products			5/24/2012	9:29:04 AM	12.10	4.95	0.00
0181	Enterprise Products			5/24/2012	9:30:04 AM	12.09	4.95	0.00
0181	Enterprise Products			5/24/2012	9:31:04 AM	12.09	4.95	0.00
0181	Enterprise Products			5/24/2012	9:32:04 AM	12.09	4.90	0.00
0181	Enterprise Products			5/24/2012	9:33:04 AM	12.19	4.45	0.00
0181	Enterprise Products			5/24/2012	9:34:04 AM	12.19	4.45	-0.05
0181	Enterprise Products			5/24/2012	9:35:04 AM	12.19	4.45	0.00
0181	Enterprise Products			5/24/2012	9:36:04 AM	12.19	4.40	0.00
0181	Enterprise Products			5/24/2012	9:37:04 AM	12.19	4.40	0.90
0181	Enterprise Products			5/24/2012	9:38:04 AM	20.68	2.90	0.00
0181	Enterprise Products			5/24/2012	9:39:04 AM	20.68	-0.55	-0.05
0181	Enterprise Products			5/24/2012	9:40:04 AM	20.68	-0.55	-0.55
0181	Enterprise Products			5/24/2012	9:41:04 AM	***20.77***	***-0.55***	***-0.50***
0181	Enterprise Products			5/24/2012	9:42:04 AM	20.68	-0.55	20.25
0181	Enterprise Products			5/24/2012	9:43:04 AM	17.55	1.40	5.90
0181	Enterprise Products			5/24/2012	9:44:04 AM	16.77	67.00	11.30
0181	Enterprise Products			5/24/2012	9:45:04 AM	16.77	71.50	10.80
0181	Enterprise Products			5/24/2012	9:46:04 AM	0.28	71.00	85.10
0181	Enterprise Products			5/24/2012	9:47:04 AM	***-0.01***	***87.45***	***97.95***
0181	Enterprise Products	South Carlsbad #1		5/24/2012	9:47:43 AM	13.46	87.45	62.30
0181	Enterprise Products	South Carlsbad #1		5/24/2012	9:48:13 AM	16.67	81.45	11.85
0181	Enterprise Products	South Carlsbad #1		5/24/2012	9:48:43 AM	16.67	73.00	10.30
0181	Enterprise Products	South Carlsbad #1		5/24/2012	9:48:46 AM	16.67	73.00	10.30
0181	Enterprise Products	South Carlsbad #1		5/24/2012	12:55:46 PM	16.48	86.50	8.85
0181	Enterprise Products	South Carlsbad #1		5/24/2012	12:56:16 PM	-0.01	90.21	99.35
0181	Enterprise Products	South Carlsbad #1		5/24/2012	12:56:46 PM	***-0.01***	***90.21***	***99.45***
0181	Enterprise Products	South Carlsbad #1		5/24/2012	12:57:16 PM	19.99	0.50	5.90
0181	Enterprise Products	South Carlsbad #1		5/24/2012	12:57:46 PM	20.90	0.00	0.00
0181	Enterprise Products	South Carlsbad #1		5/24/2012	12:58:16 PM	***20.90***	***0.00***	***0.00***
0181	Enterprise Products	South Carlsbad #1		5/24/2012	12:58:46 PM	20.48	0.00	0.00
0181	Enterprise Products	South Carlsbad #1		5/24/2012	12:59:16 PM	20.48	0.00	0.00
0181	Enterprise Products	South Carlsbad #1		5/24/2012	12:59:46 PM	20.48	0.00	0.00

Project Number	Client	Source	Run Number	Date	Time	O2 (% Vol)	NOX (ppmvd)	CO (ppmvd)
0181	Enterprise Products	South Carlsbad #1		5/24/2012	1:00:16 PM	20.48	-0.50	0.00
0181	Enterprise Products	South Carlsbad #1		5/24/2012	1:00:46 PM	20.48	-0.50	0.00
0181	Enterprise Products	South Carlsbad #1		5/24/2012	1:01:16 PM	20.38	0.00	0.00
0181	Enterprise Products	South Carlsbad #1		5/24/2012	1:01:46 PM	16.38	0.45	8.85
0181	Enterprise Products	South Carlsbad #2		5/24/2012	1:02:15 PM	16.28	75.50	9.35
0181	Enterprise Products	South Carlsbad #2		5/24/2012	1:02:17 PM	16.28	75.50	9.35
0181	Enterprise Products	South Carlsbad #2	Run 4	5/24/2012	1:02:47 PM	16.28	85.00	9.35
0181	Enterprise Products	South Carlsbad #2	Run 4	5/24/2012	1:03:17 PM	16.28	85.50	8.85
0181	Enterprise Products	South Carlsbad #2	Run 4	5/24/2012	1:03:47 PM	16.28	85.50	8.85
0181	Enterprise Products	South Carlsbad #2	Run 4	5/24/2012	1:04:17 PM	16.28	85.50	8.85
0181	Enterprise Products	South Carlsbad #2	Run 4	5/24/2012	1:04:47 PM	16.28	86.00	8.85
0181	Enterprise Products	South Carlsbad #2	Run 4	5/24/2012	1:05:17 PM	16.28	86.00	9.85
0181	Enterprise Products	South Carlsbad #2	Run 4	5/24/2012	1:05:47 PM	16.28	86.00	10.30
0181	Enterprise Products	South Carlsbad #2	Run 4	5/24/2012	1:06:17 PM	16.28	86.50	9.85
0181	Enterprise Products	South Carlsbad #2	Run 4	5/24/2012	1:06:47 PM	16.28	86.50	9.85
0181	Enterprise Products	South Carlsbad #2	Run 4	5/24/2012	1:07:17 PM	16.28	87.50	9.85
0181	Enterprise Products	South Carlsbad #2	Run 4	5/24/2012	1:07:47 PM	16.28	88.00	9.35
0181	Enterprise Products	South Carlsbad #2	Run 4	5/24/2012	1:08:17 PM	16.28	88.00	9.85
0181	Enterprise Products	South Carlsbad #2	Run 4	5/24/2012	1:08:47 PM	16.28	89.00	9.85
0181	Enterprise Products	South Carlsbad #2	Run 4	5/24/2012	1:09:17 PM	16.28	89.50	9.85
0181	Enterprise Products	South Carlsbad #2	Run 4	5/24/2012	1:09:47 PM	16.28	89.50	9.85
0181	Enterprise Products	South Carlsbad #2	Run 4	5/24/2012	1:10:17 PM	16.28	89.00	9.85
0181	Enterprise Products	South Carlsbad #2	Run 4	5/24/2012	1:10:47 PM	16.28	88.50	9.35
0181	Enterprise Products	South Carlsbad #2	Run 4	5/24/2012	1:11:17 PM	16.28	89.00	9.85
0181	Enterprise Products	South Carlsbad #2	Run 4	5/24/2012	1:11:47 PM	16.28	88.50	9.85
0181	Enterprise Products	South Carlsbad #2	Run 4	5/24/2012	1:12:17 PM	16.28	89.00	9.85
0181	Enterprise Products	South Carlsbad #2	Run 4	5/24/2012	1:12:47 PM	16.28	89.00	9.85
0181	Enterprise Products	South Carlsbad #2	Run 4	5/24/2012	1:13:17 PM	16.28	88.50	9.85
0181	Enterprise Products	South Carlsbad #2	Run 4	5/24/2012	1:13:47 PM	16.28	88.50	9.85
0181	Enterprise Products	South Carlsbad #2	Run 4	5/24/2012	1:14:17 PM	16.28	88.50	9.85
0181	Enterprise Products	South Carlsbad #2	Run 4	5/24/2012	1:14:47 PM	16.28	88.00	9.85
0181	Enterprise Products	South Carlsbad #2	Run 4	5/24/2012	1:15:17 PM	16.28	88.00	9.85
0181	Enterprise Products	South Carlsbad #2	Run 4	5/24/2012	1:15:47 PM	16.28	88.00	9.85
0181	Enterprise Products	South Carlsbad #2	Run 4	5/24/2012	1:16:17 PM	16.28	88.00	9.85
0181	Enterprise Products	South Carlsbad #2	Run 4	5/24/2012	1:16:47 PM	16.28	88.50	8.85
0181	Enterprise Products	South Carlsbad #2	Run 4	5/24/2012	1:17:17 PM	16.28	88.00	9.35
0181	Enterprise Products	South Carlsbad #2	Run 4	5/24/2012	1:17:47 PM	16.28	87.50	9.85
0181	Enterprise Products	South Carlsbad #2	Run 4	5/24/2012	1:18:17 PM	16.28	87.00	9.85
0181	Enterprise Products	South Carlsbad #2	Run 4	5/24/2012	1:18:47 PM	16.28	87.00	9.85
0181	Enterprise Products	South Carlsbad #2	Run 4	5/24/2012	1:19:17 PM	16.28	86.50	9.85
0181	Enterprise Products	South Carlsbad #2	Run 4	5/24/2012	1:19:47 PM	16.28	86.50	9.85
0181	Enterprise Products	South Carlsbad #2	Run 4	5/24/2012	1:20:17 PM	16.28	86.50	9.85
0181	Enterprise Products	South Carlsbad #2	Run 4	5/24/2012	1:20:47 PM	16.28	86.50	10.30
0181	Enterprise Products	South Carlsbad #2	Run 4	5/24/2012	1:21:17 PM	16.28	86.00	9.85
0181	Enterprise Products	South Carlsbad #2	Run 4	5/24/2012	1:21:47 PM	16.28	86.00	9.35
0181	Enterprise Products	South Carlsbad #2	Run 4	5/24/2012	1:22:17 PM	16.28	86.00	9.85
0181	Enterprise Products	South Carlsbad #2	Run 4	5/24/2012	1:22:47 PM	16.28	86.00	9.85
0181	Enterprise Products	South Carlsbad #2	Run 4	5/24/2012	1:23:17 PM	16.28	86.00	9.85
0181	Enterprise Products	South Carlsbad #2	Run 4	5/24/2012	1:23:47 PM	16.28	86.00	9.85
0181	Enterprise Products	South Carlsbad #2	Run 4	5/24/2012	1:24:17 PM	16.28	86.00	8.85
0181	Enterprise Products	South Carlsbad #2	Run 4	5/24/2012	1:24:47 PM	16.28	85.50	8.85
0181	Enterprise Products	South Carlsbad #2	Run 4	5/24/2012	1:25:17 PM	16.28	85.50	9.35
0181	Enterprise Products	South Carlsbad #2	Run 4	5/24/2012	1:25:47 PM	16.28	85.50	9.85
0181	Enterprise Products	South Carlsbad #2	Run 4	5/24/2012	1:26:17 PM	16.28	85.50	9.35
0181	Enterprise Products	South Carlsbad #2	Run 4	5/24/2012	1:26:47 PM	16.28	85.50	9.85
0181	Enterprise Products	South Carlsbad #2	Run 4	5/24/2012	1:27:17 PM	16.28	85.50	9.85
0181	Enterprise Products	South Carlsbad #2	Run 4	5/24/2012	1:27:47 PM	16.28	85.50	9.85
0181	Enterprise Products	South Carlsbad #2	Run 4	5/24/2012	1:28:17 PM	16.28	85.50	9.85
0181	Enterprise Products	South Carlsbad #2	Run 4	5/24/2012	1:28:47 PM	16.28	85.50	9.85
0181	Enterprise Products	South Carlsbad #2	Run 4	5/24/2012	1:29:17 PM	16.28	85.50	9.35
0181	Enterprise Products	South Carlsbad #2	Run 4	5/24/2012	1:29:47 PM	16.28	85.50	9.35
0181	Enterprise Products	South Carlsbad #2	Run 4	5/24/2012	1:30:17 PM	16.28	85.50	9.85
0181	Enterprise Products	South Carlsbad #2	Run 4	5/24/2012	1:30:47 PM	16.28	85.50	9.35
0181	Enterprise Products	South Carlsbad #2	Run 4	5/24/2012	1:31:17 PM	16.28	85.50	9.35
0181	Enterprise Products	South Carlsbad #2	Run 4	5/24/2012	1:31:47 PM	16.28	85.00	9.85
0181	Enterprise Products	South Carlsbad #2	Run 4	5/24/2012	1:32:17 PM	16.28	85.50	9.85
0181	Enterprise Products	South Carlsbad #2	Run 4	5/24/2012	1:32:47 PM	16.28	85.50	9.85
0181	Enterprise Products	South Carlsbad #2	Run 4	5/24/2012	1:33:17 PM	16.28	86.00	9.35
0181	Enterprise Products	South Carlsbad #2	Run 4	5/24/2012	1:33:47 PM	16.28	86.00	9.85

Project Number	Client	Source	Run Number	Date	Time	O2 (% Vol)	NOX (ppmvd)	CO (ppmvd)
0181	Enterprise Products	South Carlsbad #2	Run 4	5/24/2012	1:34:17 PM	16.28	85.50	9.85
0181	Enterprise Products	South Carlsbad #2	Run 4	5/24/2012	1:34:47 PM	16.28	85.50	9.85
0181	Enterprise Products	South Carlsbad #2	Run 4	5/24/2012	1:35:17 PM	16.28	86.00	9.85
0181	Enterprise Products	South Carlsbad #2	Run 4	5/24/2012	1:35:47 PM	16.28	86.00	9.85
0181	Enterprise Products	South Carlsbad #2	Run 4	5/24/2012	1:36:17 PM	16.28	86.00	9.35
0181	Enterprise Products	South Carlsbad #2	Run 4	5/24/2012	1:36:47 PM	16.28	86.00	9.35
0181	Enterprise Products	South Carlsbad #2	Run 4	5/24/2012	1:37:17 PM	16.28	86.00	9.85
0181	Enterprise Products	South Carlsbad #2	Run 4	5/24/2012	1:37:47 PM	16.28	86.50	9.85
0181	Enterprise Products	South Carlsbad #2	Run 4	5/24/2012	1:38:17 PM	16.28	86.50	9.85
0181	Enterprise Products	South Carlsbad #2	Run 4	5/24/2012	1:38:47 PM	16.28	86.00	9.85
0181	Enterprise Products	South Carlsbad #2	Run 4	5/24/2012	1:39:17 PM	16.28	86.00	9.85
0181	Enterprise Products	South Carlsbad #2	Run 4	5/24/2012	1:39:47 PM	16.28	86.00	10.30
0181	Enterprise Products	South Carlsbad #2	Run 4	5/24/2012	1:40:17 PM	16.28	86.00	9.85
0181	Enterprise Products	South Carlsbad #2	Run 4	5/24/2012	1:40:47 PM	16.28	86.00	9.85
0181	Enterprise Products	South Carlsbad #2	Run 4	5/24/2012	1:41:17 PM	16.28	86.00	9.85
0181	Enterprise Products	South Carlsbad #2	Run 4	5/24/2012	1:41:47 PM	16.28	85.50	9.35
0181	Enterprise Products	South Carlsbad #2	Run 4	5/24/2012	1:42:17 PM	16.28	86.00	9.85
0181	Enterprise Products	South Carlsbad #2	Run 4	5/24/2012	1:42:47 PM	16.28	86.00	9.85
0181	Enterprise Products	South Carlsbad #2	Run 4	5/24/2012	1:43:17 PM	16.28	86.50	9.35
0181	Enterprise Products	South Carlsbad #2	Run 4	5/24/2012	1:43:47 PM	16.28	86.00	9.35
0181	Enterprise Products	South Carlsbad #2	Run 4	5/24/2012	1:44:17 PM	16.28	86.00	9.85
0181	Enterprise Products	South Carlsbad #2	Run 4	5/24/2012	1:44:47 PM	16.28	86.00	9.35
0181	Enterprise Products	South Carlsbad #2	Run 4	5/24/2012	1:45:17 PM	16.28	86.00	9.85
0181	Enterprise Products	South Carlsbad #2	Run 4	5/24/2012	1:45:47 PM	16.28	86.00	9.35
0181	Enterprise Products	South Carlsbad #2	Run 4	5/24/2012	1:46:17 PM	16.28	86.00	9.35
0181	Enterprise Products	South Carlsbad #2	Run 4	5/24/2012	1:46:47 PM	16.28	86.50	9.85
0181	Enterprise Products	South Carlsbad #2	Run 4	5/24/2012	1:47:17 PM	16.28	86.00	9.85
0181	Enterprise Products	South Carlsbad #2	Run 4	5/24/2012	1:47:47 PM	16.28	86.00	9.35
0181	Enterprise Products	South Carlsbad #2	Run 4	5/24/2012	1:48:17 PM	16.28	86.50	9.85
0181	Enterprise Products	South Carlsbad #2	Run 4	5/24/2012	1:48:47 PM	16.28	86.50	9.85
0181	Enterprise Products	South Carlsbad #2	Run 4	5/24/2012	1:49:17 PM	16.28	86.50	9.35
0181	Enterprise Products	South Carlsbad #2	Run 4	5/24/2012	1:49:47 PM	16.28	86.00	9.35
0181	Enterprise Products	South Carlsbad #2	Run 4	5/24/2012	1:50:17 PM	16.28	86.50	9.85
0181	Enterprise Products	South Carlsbad #2	Run 4	5/24/2012	1:50:47 PM	16.28	86.50	9.85
0181	Enterprise Products	South Carlsbad #2	Run 4	5/24/2012	1:51:17 PM	16.28	86.50	9.85
0181	Enterprise Products	South Carlsbad #2	Run 4	5/24/2012	1:51:47 PM	16.28	86.50	9.85
0181	Enterprise Products	South Carlsbad #2	Run 4	5/24/2012	1:52:17 PM	16.28	86.50	9.35
0181	Enterprise Products	South Carlsbad #2	Run 4	5/24/2012	1:52:47 PM	16.28	86.50	9.85
0181	Enterprise Products	South Carlsbad #2	Run 4	5/24/2012	1:53:17 PM	16.28	86.50	9.85
0181	Enterprise Products	South Carlsbad #2	Run 4	5/24/2012	1:53:47 PM	16.28	86.50	9.85
0181	Enterprise Products	South Carlsbad #2	Run 4	5/24/2012	1:54:17 PM	16.28	86.50	9.85
0181	Enterprise Products	South Carlsbad #2	Run 4	5/24/2012	1:54:47 PM	16.28	87.00	9.35
0181	Enterprise Products	South Carlsbad #2	Run 4	5/24/2012	1:55:17 PM	16.28	86.50	9.35
0181	Enterprise Products	South Carlsbad #2	Run 4	5/24/2012	1:55:47 PM	16.28	86.50	9.35
0181	Enterprise Products	South Carlsbad #2	Run 4	5/24/2012	1:56:17 PM	16.28	86.50	9.35
0181	Enterprise Products	South Carlsbad #2	Run 4	5/24/2012	1:56:47 PM	16.28	86.50	9.35
0181	Enterprise Products	South Carlsbad #2	Run 4	5/24/2012	1:57:17 PM	16.28	86.50	9.35
0181	Enterprise Products	South Carlsbad #2	Run 4	5/24/2012	1:57:47 PM	16.28	86.50	9.35
0181	Enterprise Products	South Carlsbad #2	Run 4	5/24/2012	1:58:17 PM	16.28	86.50	9.35
0181	Enterprise Products	South Carlsbad #2	Run 4	5/24/2012	1:58:47 PM	16.38	86.50	9.85
0181	Enterprise Products	South Carlsbad #2	Run 4	5/24/2012	1:59:17 PM	16.28	86.50	9.85
0181	Enterprise Products	South Carlsbad #2	Run 4	5/24/2012	1:59:47 PM	16.38	86.50	9.35
0181	Enterprise Products	South Carlsbad #2	Run 4	5/24/2012	2:00:17 PM	16.38	86.50	9.35
0181	Enterprise Products	South Carlsbad #2	Run 4	5/24/2012	2:00:47 PM	16.38	86.00	9.85
0181	Enterprise Products	South Carlsbad #2	Run 4	5/24/2012	2:01:17 PM	16.28	86.00	9.35
0181	Enterprise Products	South Carlsbad #2	Run 4	5/24/2012	2:01:47 PM	16.28	86.50	9.35
0181	Enterprise Products	South Carlsbad #2	Run 4	5/24/2012	2:02:17 PM	16.28	86.50	9.35
		Run Averages				16.28	86.51	9.65
0181	Enterprise Products	South Carlsbad #2		5/24/2012	2:02:47 PM	-0.01	86.50	9.35
0181	Enterprise Products	South Carlsbad #2		5/24/2012	2:03:17 PM	***-0.01***	***90.40***	***99.50***
0181	Enterprise Products	South Carlsbad #2		5/24/2012	2:03:47 PM	20.80	0.00	0.00
0181	Enterprise Products	South Carlsbad #2		5/24/2012	2:04:17 PM	***20.90***	***0.00***	***0.00***
0181	Enterprise Products	South Carlsbad #2		5/24/2012	2:04:38 PM	16.28	86.65	9.35
0181	Enterprise Products	South Carlsbad #2	Run 5	5/24/2012	2:05:08 PM	16.28	86.50	9.35
0181	Enterprise Products	South Carlsbad #2	Run 5	5/24/2012	2:05:38 PM	16.28	87.00	9.35
0181	Enterprise Products	South Carlsbad #2	Run 5	5/24/2012	2:06:08 PM	16.28	86.50	9.35
0181	Enterprise Products	South Carlsbad #2	Run 5	5/24/2012	2:06:38 PM	16.28	86.50	9.85
0181	Enterprise Products	South Carlsbad #2	Run 5	5/24/2012	2:07:08 PM	16.28	86.50	9.85
0181	Enterprise Products	South Carlsbad #2	Run 5	5/24/2012	2:07:38 PM	16.28	86.50	9.85

Project Number	Client	Source	Run Number	Date	Time	O2 (% Vol)	NOX (ppmvd)	CO (ppmvd)
0181	Enterprise Products	South Carlsbad #2	Run 5	5/24/2012	2:08:08 PM	16.28	86.50	9.35
0181	Enterprise Products	South Carlsbad #2	Run 5	5/24/2012	2:08:38 PM	16.28	86.50	9.35
0181	Enterprise Products	South Carlsbad #2	Run 5	5/24/2012	2:09:08 PM	16.28	86.50	9.35
0181	Enterprise Products	South Carlsbad #2	Run 5	5/24/2012	2:09:38 PM	16.28	86.50	9.35
0181	Enterprise Products	South Carlsbad #2	Run 5	5/24/2012	2:10:08 PM	16.28	86.50	9.35
0181	Enterprise Products	South Carlsbad #2	Run 5	5/24/2012	2:10:38 PM	16.28	86.50	9.35
0181	Enterprise Products	South Carlsbad #2	Run 5	5/24/2012	2:11:08 PM	16.28	86.50	9.35
0181	Enterprise Products	South Carlsbad #2	Run 5	5/24/2012	2:11:38 PM	16.28	86.50	9.35
0181	Enterprise Products	South Carlsbad #2	Run 5	5/24/2012	2:12:08 PM	16.28	87.00	9.35
0181	Enterprise Products	South Carlsbad #2	Run 5	5/24/2012	2:12:38 PM	16.28	86.50	9.85
0181	Enterprise Products	South Carlsbad #2	Run 5	5/24/2012	2:13:08 PM	16.28	87.00	9.85
0181	Enterprise Products	South Carlsbad #2	Run 5	5/24/2012	2:13:38 PM	16.28	87.00	9.85
0181	Enterprise Products	South Carlsbad #2	Run 5	5/24/2012	2:14:08 PM	16.38	86.50	8.85
0181	Enterprise Products	South Carlsbad #2	Run 5	5/24/2012	2:14:38 PM	16.28	86.50	9.35
0181	Enterprise Products	South Carlsbad #2	Run 5	5/24/2012	2:15:08 PM	16.38	86.50	9.35
0181	Enterprise Products	South Carlsbad #2	Run 5	5/24/2012	2:15:38 PM	16.28	86.50	9.85
0181	Enterprise Products	South Carlsbad #2	Run 5	5/24/2012	2:16:08 PM	16.28	86.50	9.85
0181	Enterprise Products	South Carlsbad #2	Run 5	5/24/2012	2:16:38 PM	16.28	86.50	9.35
0181	Enterprise Products	South Carlsbad #2	Run 5	5/24/2012	2:17:08 PM	16.28	86.50	9.35
0181	Enterprise Products	South Carlsbad #2	Run 5	5/24/2012	2:17:38 PM	16.28	86.50	9.35
0181	Enterprise Products	South Carlsbad #2	Run 5	5/24/2012	2:18:08 PM	16.38	86.50	9.35
0181	Enterprise Products	South Carlsbad #2	Run 5	5/24/2012	2:18:38 PM	16.38	86.00	9.85
0181	Enterprise Products	South Carlsbad #2	Run 5	5/24/2012	2:19:08 PM	16.38	86.00	9.85
0181	Enterprise Products	South Carlsbad #2	Run 5	5/24/2012	2:19:38 PM	16.38	86.50	9.35
0181	Enterprise Products	South Carlsbad #2	Run 5	5/24/2012	2:20:08 PM	16.38	86.50	9.35
0181	Enterprise Products	South Carlsbad #2	Run 5	5/24/2012	2:20:38 PM	16.38	86.00	9.85
0181	Enterprise Products	South Carlsbad #2	Run 5	5/24/2012	2:21:08 PM	16.38	86.50	8.85
0181	Enterprise Products	South Carlsbad #2	Run 5	5/24/2012	2:21:38 PM	16.28	86.50	9.85
0181	Enterprise Products	South Carlsbad #2	Run 5	5/24/2012	2:22:08 PM	16.38	86.50	9.85
0181	Enterprise Products	South Carlsbad #2	Run 5	5/24/2012	2:22:38 PM	16.38	86.50	9.85
0181	Enterprise Products	South Carlsbad #2	Run 5	5/24/2012	2:23:08 PM	16.38	86.50	9.85
0181	Enterprise Products	South Carlsbad #2	Run 5	5/24/2012	2:23:38 PM	16.38	86.50	9.35
0181	Enterprise Products	South Carlsbad #2	Run 5	5/24/2012	2:24:08 PM	16.38	86.50	9.85
0181	Enterprise Products	South Carlsbad #2	Run 5	5/24/2012	2:24:38 PM	16.38	87.00	9.35
0181	Enterprise Products	South Carlsbad #2	Run 5	5/24/2012	2:25:08 PM	16.38	86.50	9.85
0181	Enterprise Products	South Carlsbad #2	Run 5	5/24/2012	2:25:38 PM	16.38	86.50	9.35
0181	Enterprise Products	South Carlsbad #2	Run 5	5/24/2012	2:26:08 PM	16.38	86.50	9.85
0181	Enterprise Products	South Carlsbad #2	Run 5	5/24/2012	2:26:38 PM	16.38	86.50	9.85
0181	Enterprise Products	South Carlsbad #2	Run 5	5/24/2012	2:27:08 PM	16.38	86.50	9.35
0181	Enterprise Products	South Carlsbad #2	Run 5	5/24/2012	2:27:38 PM	16.38	86.50	9.85
0181	Enterprise Products	South Carlsbad #2	Run 5	5/24/2012	2:28:08 PM	16.38	87.00	9.85
0181	Enterprise Products	South Carlsbad #2	Run 5	5/24/2012	2:28:38 PM	16.38	86.50	9.35
0181	Enterprise Products	South Carlsbad #2	Run 5	5/24/2012	2:29:08 PM	16.38	86.50	9.85
0181	Enterprise Products	South Carlsbad #2	Run 5	5/24/2012	2:29:38 PM	16.38	86.50	10.30
0181	Enterprise Products	South Carlsbad #2	Run 5	5/24/2012	2:30:08 PM	16.38	87.00	9.85
0181	Enterprise Products	South Carlsbad #2	Run 5	5/24/2012	2:30:38 PM	16.38	87.00	9.85
0181	Enterprise Products	South Carlsbad #2	Run 5	5/24/2012	2:31:08 PM	16.38	87.00	9.85
0181	Enterprise Products	South Carlsbad #2	Run 5	5/24/2012	2:31:38 PM	16.38	87.00	9.85
0181	Enterprise Products	South Carlsbad #2	Run 5	5/24/2012	2:32:08 PM	16.38	87.00	9.85
0181	Enterprise Products	South Carlsbad #2	Run 5	5/24/2012	2:32:38 PM	16.28	87.00	9.35
0181	Enterprise Products	South Carlsbad #2	Run 5	5/24/2012	2:33:08 PM	16.28	87.00	9.35
0181	Enterprise Products	South Carlsbad #2	Run 5	5/24/2012	2:33:38 PM	16.38	87.00	9.85
0181	Enterprise Products	South Carlsbad #2	Run 5	5/24/2012	2:34:08 PM	16.38	87.00	9.35
0181	Enterprise Products	South Carlsbad #2	Run 5	5/24/2012	2:34:38 PM	16.38	87.00	9.85
0181	Enterprise Products	South Carlsbad #2	Run 5	5/24/2012	2:35:08 PM	16.38	87.00	9.85
0181	Enterprise Products	South Carlsbad #2	Run 5	5/24/2012	2:35:38 PM	16.38	87.00	9.35
0181	Enterprise Products	South Carlsbad #2	Run 5	5/24/2012	2:36:08 PM	16.28	87.00	8.85
0181	Enterprise Products	South Carlsbad #2	Run 5	5/24/2012	2:36:38 PM	16.28	86.50	9.35
0181	Enterprise Products	South Carlsbad #2	Run 5	5/24/2012	2:37:08 PM	16.28	87.00	9.85
0181	Enterprise Products	South Carlsbad #2	Run 5	5/24/2012	2:37:38 PM	16.28	86.50	9.35
0181	Enterprise Products	South Carlsbad #2	Run 5	5/24/2012	2:38:08 PM	16.28	87.00	9.35
0181	Enterprise Products	South Carlsbad #2	Run 5	5/24/2012	2:38:38 PM	16.28	86.50	9.35
0181	Enterprise Products	South Carlsbad #2	Run 5	5/24/2012	2:39:08 PM	16.28	86.50	9.35
0181	Enterprise Products	South Carlsbad #2	Run 5	5/24/2012	2:39:38 PM	16.28	86.50	9.35
0181	Enterprise Products	South Carlsbad #2	Run 5	5/24/2012	2:40:08 PM	16.28	86.50	9.35
0181	Enterprise Products	South Carlsbad #2	Run 5	5/24/2012	2:40:38 PM	16.28	86.50	9.35
0181	Enterprise Products	South Carlsbad #2	Run 5	5/24/2012	2:41:08 PM	16.28	86.50	9.35
0181	Enterprise Products	South Carlsbad #2	Run 5	5/24/2012	2:41:38 PM	16.28	87.00	9.85
0181	Enterprise Products	South Carlsbad #2	Run 5	5/24/2012	2:42:08 PM	16.28	87.00	9.85

Project Number	Client	Source	Run Number	Date	Time	O2 (% Vol)	NOX (ppmvd)	CO (ppmvd)
0181	Enterprise Products	South Carlsbad #2	Run 5	5/24/2012	2:42:38 PM	16.28	88.00	9.85
0181	Enterprise Products	South Carlsbad #2	Run 5	5/24/2012	2:43:08 PM	16.28	88.50	9.85
0181	Enterprise Products	South Carlsbad #2	Run 5	5/24/2012	2:43:38 PM	16.28	89.00	9.35
0181	Enterprise Products	South Carlsbad #2	Run 5	5/24/2012	2:44:08 PM	16.28	89.00	9.35
0181	Enterprise Products	South Carlsbad #2	Run 5	5/24/2012	2:44:38 PM	16.28	89.00	9.35
0181	Enterprise Products	South Carlsbad #2	Run 5	5/24/2012	2:45:08 PM	16.28	89.00	9.35
0181	Enterprise Products	South Carlsbad #2	Run 5	5/24/2012	2:45:38 PM	16.28	89.00	9.35
0181	Enterprise Products	South Carlsbad #2	Run 5	5/24/2012	2:46:08 PM	16.28	89.50	9.35
0181	Enterprise Products	South Carlsbad #2	Run 5	5/24/2012	2:46:38 PM	16.28	90.00	9.35
0181	Enterprise Products	South Carlsbad #2	Run 5	5/24/2012	2:47:08 PM	16.28	90.00	9.85
0181	Enterprise Products	South Carlsbad #2	Run 5	5/24/2012	2:47:38 PM	16.28	90.00	9.85
0181	Enterprise Products	South Carlsbad #2	Run 5	5/24/2012	2:48:08 PM	16.28	90.50	9.85
0181	Enterprise Products	South Carlsbad #2	Run 5	5/24/2012	2:48:38 PM	16.28	90.00	9.85
0181	Enterprise Products	South Carlsbad #2	Run 5	5/24/2012	2:49:08 PM	16.28	90.00	9.85
0181	Enterprise Products	South Carlsbad #2	Run 5	5/24/2012	2:49:38 PM	16.28	89.50	9.35
0181	Enterprise Products	South Carlsbad #2	Run 5	5/24/2012	2:50:08 PM	16.28	89.50	9.35
0181	Enterprise Products	South Carlsbad #2	Run 5	5/24/2012	2:50:38 PM	16.28	89.00	9.85
0181	Enterprise Products	South Carlsbad #2	Run 5	5/24/2012	2:51:08 PM	16.28	89.00	10.30
0181	Enterprise Products	South Carlsbad #2	Run 5	5/24/2012	2:51:38 PM	16.28	89.00	9.85
0181	Enterprise Products	South Carlsbad #2	Run 5	5/24/2012	2:52:08 PM	16.28	89.00	9.85
0181	Enterprise Products	South Carlsbad #2	Run 5	5/24/2012	2:52:38 PM	16.28	88.50	9.35
0181	Enterprise Products	South Carlsbad #2	Run 5	5/24/2012	2:53:08 PM	16.28	88.00	9.35
0181	Enterprise Products	South Carlsbad #2	Run 5	5/24/2012	2:53:38 PM	16.28	87.50	9.35
0181	Enterprise Products	South Carlsbad #2	Run 5	5/24/2012	2:54:08 PM	16.28	87.00	9.35
0181	Enterprise Products	South Carlsbad #2	Run 5	5/24/2012	2:54:38 PM	16.28	87.00	9.35
0181	Enterprise Products	South Carlsbad #2	Run 5	5/24/2012	2:55:08 PM	16.28	86.50	9.35
0181	Enterprise Products	South Carlsbad #2	Run 5	5/24/2012	2:55:38 PM	16.28	86.50	9.85
0181	Enterprise Products	South Carlsbad #2	Run 5	5/24/2012	2:56:08 PM	16.28	86.50	9.35
0181	Enterprise Products	South Carlsbad #2	Run 5	5/24/2012	2:56:38 PM	16.28	86.50	9.85
0181	Enterprise Products	South Carlsbad #2	Run 5	5/24/2012	2:57:08 PM	16.28	86.50	9.35
0181	Enterprise Products	South Carlsbad #2	Run 5	5/24/2012	2:57:38 PM	16.28	86.50	9.35
0181	Enterprise Products	South Carlsbad #2	Run 5	5/24/2012	2:58:08 PM	16.18	86.50	9.85
0181	Enterprise Products	South Carlsbad #2	Run 5	5/24/2012	2:58:38 PM	16.18	86.50	9.85
0181	Enterprise Products	South Carlsbad #2	Run 5	5/24/2012	2:59:08 PM	16.18	86.50	9.35
0181	Enterprise Products	South Carlsbad #2	Run 5	5/24/2012	2:59:38 PM	16.18	86.50	9.35
0181	Enterprise Products	South Carlsbad #2	Run 5	5/24/2012	3:00:08 PM	16.18	86.00	9.85
0181	Enterprise Products	South Carlsbad #2	Run 5	5/24/2012	3:00:38 PM	16.18	86.50	9.85
0181	Enterprise Products	South Carlsbad #2	Run 5	5/24/2012	3:01:08 PM	16.18	86.00	9.85
0181	Enterprise Products	South Carlsbad #2	Run 5	5/24/2012	3:01:38 PM	16.28	86.50	9.85
0181	Enterprise Products	South Carlsbad #2	Run 5	5/24/2012	3:02:08 PM	16.18	86.00	9.85
0181	Enterprise Products	South Carlsbad #2	Run 5	5/24/2012	3:02:38 PM	16.18	86.00	9.85
0181	Enterprise Products	South Carlsbad #2	Run 5	5/24/2012	3:03:08 PM	16.18	86.00	8.85
0181	Enterprise Products	South Carlsbad #2	Run 5	5/24/2012	3:03:38 PM	16.28	86.00	8.85
0181	Enterprise Products	South Carlsbad #2	Run 5	5/24/2012	3:04:08 PM	16.28	86.00	8.85
0181	Enterprise Products	South Carlsbad #2	Run 5	5/24/2012	3:04:38 PM	16.28	86.00	8.85
		Run Averages				16.30	87.07	9.56
0181	Enterprise Products	South Carlsbad #2		5/24/2012	3:05:08 PM	16.28	86.00	9.35
0181	Enterprise Products	South Carlsbad #2		5/24/2012	3:05:38 PM	-0.01	90.50	99.60
0181	Enterprise Products	South Carlsbad #2		5/24/2012	3:06:08 PM	***-0.01***	***90.50***	***99.60***
0181	Enterprise Products	South Carlsbad #2		5/24/2012	3:06:38 PM	20.85	0.00	0.00
0181	Enterprise Products	South Carlsbad #2		5/24/2012	3:07:08 PM	***20.85***	***0.00***	***0.00***
0181	Enterprise Products	South Carlsbad #2		5/24/2012	3:07:13 PM	16.28	86.00	9.35
0181	Enterprise Products	South Carlsbad #2	Run 6	5/24/2012	3:07:43 PM	16.28	85.50	9.35
0181	Enterprise Products	South Carlsbad #2	Run 6	5/24/2012	3:08:13 PM	16.28	85.50	9.35
0181	Enterprise Products	South Carlsbad #2	Run 6	5/24/2012	3:08:43 PM	16.28	86.00	9.35
0181	Enterprise Products	South Carlsbad #2	Run 6	5/24/2012	3:09:13 PM	16.28	85.50	9.85
0181	Enterprise Products	South Carlsbad #2	Run 6	5/24/2012	3:09:43 PM	16.28	86.00	9.35
0181	Enterprise Products	South Carlsbad #2	Run 6	5/24/2012	3:10:13 PM	16.28	86.00	9.85
0181	Enterprise Products	South Carlsbad #2	Run 6	5/24/2012	3:10:43 PM	16.28	86.00	9.85
0181	Enterprise Products	South Carlsbad #2	Run 6	5/24/2012	3:11:13 PM	16.28	86.00	9.70
0181	Enterprise Products	South Carlsbad #2	Run 6	5/24/2012	3:11:43 PM	16.28	86.00	9.85
0181	Enterprise Products	South Carlsbad #2	Run 6	5/24/2012	3:12:13 PM	16.28	86.00	9.85
0181	Enterprise Products	South Carlsbad #2	Run 6	5/24/2012	3:12:43 PM	16.28	86.00	9.85
0181	Enterprise Products	South Carlsbad #2	Run 6	5/24/2012	3:13:13 PM	16.28	86.50	9.85
0181	Enterprise Products	South Carlsbad #2	Run 6	5/24/2012	3:13:43 PM	16.28	86.50	8.85
0181	Enterprise Products	South Carlsbad #2	Run 6	5/24/2012	3:14:13 PM	16.28	86.00	8.85
0181	Enterprise Products	South Carlsbad #2	Run 6	5/24/2012	3:14:43 PM	16.28	86.00	8.85
0181	Enterprise Products	South Carlsbad #2	Run 6	5/24/2012	3:15:13 PM	16.28	86.00	8.35
0181	Enterprise Products	South Carlsbad #2	Run 6	5/24/2012	3:15:43 PM	16.28	86.00	9.35

Project Number	Client	Source	Run Number	Date	Time	O2 (% Vol)	NOX (ppmvd)	CO (ppmvd)
0181	Enterprise Products	South Carlsbad #2	Run 6	5/24/2012	3:16:13 PM	16.28	86.00	9.35
0181	Enterprise Products	South Carlsbad #2	Run 6	5/24/2012	3:16:43 PM	16.28	86.00	8.85
0181	Enterprise Products	South Carlsbad #2	Run 6	5/24/2012	3:17:13 PM	16.28	86.05	8.85
0181	Enterprise Products	South Carlsbad #2	Run 6	5/24/2012	3:17:43 PM	16.28	86.00	8.85
0181	Enterprise Products	South Carlsbad #2	Run 6	5/24/2012	3:18:13 PM	16.28	86.00	8.85
0181	Enterprise Products	South Carlsbad #2	Run 6	5/24/2012	3:18:43 PM	16.28	86.00	8.85
0181	Enterprise Products	South Carlsbad #2	Run 6	5/24/2012	3:19:13 PM	16.28	86.00	9.85
0181	Enterprise Products	South Carlsbad #2	Run 6	5/24/2012	3:19:43 PM	16.28	86.00	9.85
0181	Enterprise Products	South Carlsbad #2	Run 6	5/24/2012	3:20:13 PM	16.28	86.00	9.85
0181	Enterprise Products	South Carlsbad #2	Run 6	5/24/2012	3:20:43 PM	16.28	86.00	9.85
0181	Enterprise Products	South Carlsbad #2	Run 6	5/24/2012	3:21:13 PM	16.28	86.00	9.85
0181	Enterprise Products	South Carlsbad #2	Run 6	5/24/2012	3:21:43 PM	16.28	85.50	9.85
0181	Enterprise Products	South Carlsbad #2	Run 6	5/24/2012	3:22:13 PM	16.28	86.00	9.35
0181	Enterprise Products	South Carlsbad #2	Run 6	5/24/2012	3:22:43 PM	16.28	86.00	9.85
0181	Enterprise Products	South Carlsbad #2	Run 6	5/24/2012	3:23:13 PM	16.28	86.00	9.85
0181	Enterprise Products	South Carlsbad #2	Run 6	5/24/2012	3:23:43 PM	16.28	86.00	9.85
0181	Enterprise Products	South Carlsbad #2	Run 6	5/24/2012	3:24:13 PM	16.28	86.05	9.35
0181	Enterprise Products	South Carlsbad #2	Run 6	5/24/2012	3:24:43 PM	16.28	86.00	9.85
0181	Enterprise Products	South Carlsbad #2	Run 6	5/24/2012	3:25:13 PM	16.28	86.00	9.85
0181	Enterprise Products	South Carlsbad #2	Run 6	5/24/2012	3:25:43 PM	16.28	86.00	9.35
0181	Enterprise Products	South Carlsbad #2	Run 6	5/24/2012	3:26:13 PM	16.28	85.50	9.35
0181	Enterprise Products	South Carlsbad #2	Run 6	5/24/2012	3:26:43 PM	16.28	85.50	9.35
0181	Enterprise Products	South Carlsbad #2	Run 6	5/24/2012	3:27:13 PM	16.28	85.50	9.35
0181	Enterprise Products	South Carlsbad #2	Run 6	5/24/2012	3:27:43 PM	16.28	85.50	9.85
0181	Enterprise Products	South Carlsbad #2	Run 6	5/24/2012	3:28:13 PM	16.28	85.50	9.35
0181	Enterprise Products	South Carlsbad #2	Run 6	5/24/2012	3:28:43 PM	16.28	86.00	9.85
0181	Enterprise Products	South Carlsbad #2	Run 6	5/24/2012	3:29:13 PM	16.28	85.50	9.35
0181	Enterprise Products	South Carlsbad #2	Run 6	5/24/2012	3:29:43 PM	16.28	86.00	8.85
0181	Enterprise Products	South Carlsbad #2	Run 6	5/24/2012	3:30:13 PM	16.28	85.50	8.85
0181	Enterprise Products	South Carlsbad #2	Run 6	5/24/2012	3:30:43 PM	16.28	86.00	8.85
0181	Enterprise Products	South Carlsbad #2	Run 6	5/24/2012	3:31:13 PM	16.28	86.00	9.35
0181	Enterprise Products	South Carlsbad #2	Run 6	5/24/2012	3:31:43 PM	16.28	86.00	9.85
0181	Enterprise Products	South Carlsbad #2	Run 6	5/24/2012	3:32:13 PM	16.28	86.00	9.85
0181	Enterprise Products	South Carlsbad #2	Run 6	5/24/2012	3:32:43 PM	16.28	86.00	9.85
0181	Enterprise Products	South Carlsbad #2	Run 6	5/24/2012	3:33:13 PM	16.28	86.00	9.85
0181	Enterprise Products	South Carlsbad #2	Run 6	5/24/2012	3:33:43 PM	16.28	85.50	10.30
0181	Enterprise Products	South Carlsbad #2	Run 6	5/24/2012	3:34:13 PM	16.28	86.00	9.85
0181	Enterprise Products	South Carlsbad #2	Run 6	5/24/2012	3:34:43 PM	16.28	85.50	9.35
0181	Enterprise Products	South Carlsbad #2	Run 6	5/24/2012	3:35:13 PM	16.28	85.50	8.85
0181	Enterprise Products	South Carlsbad #2	Run 6	5/24/2012	3:35:43 PM	16.28	85.50	9.35
0181	Enterprise Products	South Carlsbad #2	Run 6	5/24/2012	3:36:13 PM	16.28	85.50	9.35
0181	Enterprise Products	South Carlsbad #2	Run 6	5/24/2012	3:36:43 PM	16.28	85.50	9.85
0181	Enterprise Products	South Carlsbad #2	Run 6	5/24/2012	3:37:13 PM	16.28	85.50	9.35
0181	Enterprise Products	South Carlsbad #2	Run 6	5/24/2012	3:37:43 PM	16.28	85.50	9.85
0181	Enterprise Products	South Carlsbad #2	Run 6	5/24/2012	3:38:13 PM	16.28	85.00	9.85
0181	Enterprise Products	South Carlsbad #2	Run 6	5/24/2012	3:38:43 PM	16.28	85.50	9.85
0181	Enterprise Products	South Carlsbad #2	Run 6	5/24/2012	3:39:13 PM	16.28	85.50	9.35
0181	Enterprise Products	South Carlsbad #2	Run 6	5/24/2012	3:39:43 PM	16.28	85.00	9.35
0181	Enterprise Products	South Carlsbad #2	Run 6	5/24/2012	3:40:13 PM	16.28	85.50	9.35
0181	Enterprise Products	South Carlsbad #2	Run 6	5/24/2012	3:40:43 PM	16.28	85.00	9.35
0181	Enterprise Products	South Carlsbad #2	Run 6	5/24/2012	3:41:13 PM	16.28	85.55	9.35
0181	Enterprise Products	South Carlsbad #2	Run 6	5/24/2012	3:41:43 PM	16.28	85.00	9.35
0181	Enterprise Products	South Carlsbad #2	Run 6	5/24/2012	3:42:13 PM	16.28	85.00	9.85
0181	Enterprise Products	South Carlsbad #2	Run 6	5/24/2012	3:42:43 PM	16.28	85.00	9.35
0181	Enterprise Products	South Carlsbad #2	Run 6	5/24/2012	3:43:13 PM	16.28	85.00	8.85
0181	Enterprise Products	South Carlsbad #2	Run 6	5/24/2012	3:43:43 PM	16.28	85.50	8.85
0181	Enterprise Products	South Carlsbad #2	Run 6	5/24/2012	3:44:13 PM	16.28	85.50	8.85
0181	Enterprise Products	South Carlsbad #2	Run 6	5/24/2012	3:44:43 PM	16.28	85.50	8.85
0181	Enterprise Products	South Carlsbad #2	Run 6	5/24/2012	3:45:13 PM	16.28	85.50	8.85
0181	Enterprise Products	South Carlsbad #2	Run 6	5/24/2012	3:45:43 PM	16.28	85.50	8.85
0181	Enterprise Products	South Carlsbad #2	Run 6	5/24/2012	3:46:13 PM	16.28	85.50	8.85
0181	Enterprise Products	South Carlsbad #2	Run 6	5/24/2012	3:46:43 PM	16.28	85.50	9.35
0181	Enterprise Products	South Carlsbad #2	Run 6	5/24/2012	3:47:13 PM	16.28	85.50	9.35
0181	Enterprise Products	South Carlsbad #2	Run 6	5/24/2012	3:47:43 PM	16.28	85.00	9.85
0181	Enterprise Products	South Carlsbad #2	Run 6	5/24/2012	3:48:13 PM	16.28	85.00	9.85
0181	Enterprise Products	South Carlsbad #2	Run 6	5/24/2012	3:48:43 PM	16.28	85.00	9.85
0181	Enterprise Products	South Carlsbad #2	Run 6	5/24/2012	3:49:13 PM	16.28	85.55	10.30
0181	Enterprise Products	South Carlsbad #2	Run 6	5/24/2012	3:49:43 PM	16.28	85.00	9.85
0181	Enterprise Products	South Carlsbad #2	Run 6	5/24/2012	3:50:13 PM	16.28	85.00	9.35

Project Number	Client	Source	Run Number	Date	Time	O2 (% Vol)	NOX (ppmvd)	CO (ppmvd)
0181	Enterprise Products	South Carlsbad #2	Run 6	5/24/2012	3:50:43 PM	16.28	85.50	9.85
0181	Enterprise Products	South Carlsbad #2	Run 6	5/24/2012	3:51:13 PM	16.28	85.00	9.85
0181	Enterprise Products	South Carlsbad #2	Run 6	5/24/2012	3:51:43 PM	16.28	85.50	9.85
0181	Enterprise Products	South Carlsbad #2	Run 6	5/24/2012	3:52:13 PM	16.28	85.50	9.85
0181	Enterprise Products	South Carlsbad #2	Run 6	5/24/2012	3:52:43 PM	16.28	85.50	9.85
0181	Enterprise Products	South Carlsbad #2	Run 6	5/24/2012	3:53:13 PM	16.28	85.50	9.35
0181	Enterprise Products	South Carlsbad #2	Run 6	5/24/2012	3:53:43 PM	16.28	85.50	9.85
0181	Enterprise Products	South Carlsbad #2	Run 6	5/24/2012	3:54:13 PM	16.28	85.00	9.35
0181	Enterprise Products	South Carlsbad #2	Run 6	5/24/2012	3:54:43 PM	16.28	85.00	9.35
0181	Enterprise Products	South Carlsbad #2	Run 6	5/24/2012	3:55:13 PM	16.28	85.00	9.35
0181	Enterprise Products	South Carlsbad #2	Run 6	5/24/2012	3:55:43 PM	16.28	85.00	9.85
0181	Enterprise Products	South Carlsbad #2	Run 6	5/24/2012	3:56:13 PM	16.28	85.00	8.85
0181	Enterprise Products	South Carlsbad #2	Run 6	5/24/2012	3:56:43 PM	16.28	85.00	8.85
0181	Enterprise Products	South Carlsbad #2	Run 6	5/24/2012	3:57:13 PM	16.28	85.00	8.85
0181	Enterprise Products	South Carlsbad #2	Run 6	5/24/2012	3:57:43 PM	16.28	85.00	8.85
0181	Enterprise Products	South Carlsbad #2	Run 6	5/24/2012	3:58:13 PM	16.28	85.00	9.35
0181	Enterprise Products	South Carlsbad #2	Run 6	5/24/2012	3:58:43 PM	16.18	85.00	9.85
0181	Enterprise Products	South Carlsbad #2	Run 6	5/24/2012	3:59:13 PM	16.28	85.00	9.35
0181	Enterprise Products	South Carlsbad #2	Run 6	5/24/2012	3:59:43 PM	16.28	85.00	9.35
0181	Enterprise Products	South Carlsbad #2	Run 6	5/24/2012	4:00:13 PM	16.28	85.00	9.85
0181	Enterprise Products	South Carlsbad #2	Run 6	5/24/2012	4:00:43 PM	16.20	85.00	9.85
0181	Enterprise Products	South Carlsbad #2	Run 6	5/24/2012	4:01:13 PM	16.18	85.00	9.85
0181	Enterprise Products	South Carlsbad #2	Run 6	5/24/2012	4:01:43 PM	16.28	85.00	9.35
0181	Enterprise Products	South Carlsbad #2	Run 6	5/24/2012	4:02:13 PM	16.28	85.00	8.85
0181	Enterprise Products	South Carlsbad #2	Run 6	5/24/2012	4:02:43 PM	16.28	85.00	9.85
0181	Enterprise Products	South Carlsbad #2	Run 6	5/24/2012	4:03:13 PM	16.28	85.00	9.85
0181	Enterprise Products	South Carlsbad #2	Run 6	5/24/2012	4:03:43 PM	16.28	85.00	9.85
0181	Enterprise Products	South Carlsbad #2	Run 6	5/24/2012	4:04:13 PM	16.18	85.55	9.35
0181	Enterprise Products	South Carlsbad #2	Run 6	5/24/2012	4:04:43 PM	16.28	85.00	9.85
0181	Enterprise Products	South Carlsbad #2	Run 6	5/24/2012	4:05:13 PM	16.18	85.50	9.85
0181	Enterprise Products	South Carlsbad #2	Run 6	5/24/2012	4:05:43 PM	16.18	85.00	9.85
0181	Enterprise Products	South Carlsbad #2	Run 6	5/24/2012	4:06:13 PM	16.18	85.00	9.85
0181	Enterprise Products	South Carlsbad #2	Run 6	5/24/2012	4:06:43 PM	16.18	85.00	9.85
0181	Enterprise Products	South Carlsbad #2	Run 6	5/24/2012	4:07:13 PM	16.18	85.50	9.85
		Run Averages				16.27	85.53	9.49
0181	Enterprise Products	South Carlsbad #2		5/24/2012	4:07:43 PM	16.18	85.50	9.85
0181	Enterprise Products	South Carlsbad #2		5/24/2012	4:08:13 PM	-0.01	90.20	99.30
0181	Enterprise Products	South Carlsbad #2		5/24/2012	4:08:43 PM	***-0.01***	***90.20***	***99.30***
0181	Enterprise Products	South Carlsbad #2		5/24/2012	4:09:13 PM	-0.01	90.20	99.30
0181	Enterprise Products	South Carlsbad #2		5/24/2012	4:09:43 PM	20.90	0.00	0.00
0181	Enterprise Products	South Carlsbad #2		5/24/2012	4:10:13 PM	***20.90***	***0.00***	***-0.50***
0181	Enterprise Products	South Carlsbad #2		5/24/2012	4:10:43 PM	20.90	0.00	-0.55
0181	Enterprise Products	South Carlsbad #2		5/24/2012	4:11:13 PM	20.90	0.00	-0.55
0181	Enterprise Products	South Carlsbad #2		5/24/2012	4:11:43 PM	20.90	0.00	-0.50
0181	Enterprise Products	South Carlsbad #2		5/24/2012	4:12:13 PM	20.90	0.00	-0.50
0181	Enterprise Products	South Carlsbad #2		5/24/2012	4:12:43 PM	20.90	0.00	-0.50
0181	Enterprise Products	South Carlsbad #2		5/24/2012	4:13:13 PM	20.90	0.00	-0.50

SPECIALTY GASES OF AMERICA, INC.
AMERICAN INDUSTRIAL GASES, INC.
AMERICAN RARE GASES, INC

6055 BRENT DR. TOLEDO, OH 43611
419-729-7732 FAX 419-729-2411

THE AMERICAN GAS GROUP
www.americangasgroup.com

ANALYTICAL REPORT

Certificate ID: 110711019 **Date:** 11/7/2011

Customer Name: B&J Welding Supply, TX

Customer Address: 1512 East 50th Street

Lubbock TX 79404

Purchase Order: 17436 **Work Order:** 127416-01

Lot Number: 1024UB11 **Product Name:** 3-Component Mixture, EPA Protocol

Size: A31 **Pressure:** 2210 psig @ 84 Deg F

Content: Ven ID# C12011

Serial #: EB0002836

Analysis Date: 11/2/2011

Shelf Life: 36 months **Expiration Date:** 11/2/2014

Component	Nominal	Actual	Accuracy	Method
Oxygen	12.0%	11.7%	+/- 1% rel	Paramagnetic
Carbon Dioxide	12.0%	12.2%	+/- 1% rel	FTIR
Nitrogen	Balance	Balance		

REFERENCE STANDARD

Std Type	Std #	Cyl #	Concentration	Exp Date
GMIS	0606JG11	EB0001508	15.1500	6/7/2013
GMIS	0625HE10	EB0023062	19.8500	6/28/2012

INSTRUMENTATION

Instrument / ID	Component
Servomex 5200	O2
MKS 2031	CO2

Note: * ANALYZED ACCORDING TO EPA TRACEABILITY PROTOCOL FOR ASSAY AND CERTIFICATION OF GASEOUS CALIBRATION STANDARDS - SEPTEMBER 1997:G1
* DO NOT USE STANDARD WHEN PRESSURE IS BELOW 150 PSIG

Protocal
Specialty Gases of America, Inc

Issued by: Josh Jones

SPECIALTY GASES OF AMERICA, INC.
AMERICAN INDUSTRIAL GASES, INC.
AMERICAN RARE GASES, INC

6055 BRENT DR. TOLEDO, OH 43611
419-729-7732 FAX 419-729-2411

THE AMERICAN GAS GROUP

www.americangasgroup.com

ANALYTICAL REPORT

Certificate ID: 110711012 **Date:** 11/7/2011

Customer Name: B&J Welding Supply, TX

Customer Address: 1512 East 50th Street

Lubbock TX 79404

Purchase Order: 17436 **Work Order:** 127416-03

Lot Number: 1024UA11 **Product Name:** 3-Component Mixture, EPA Protocol

Size: A31 **Pressure:** 2220 psig @ 82 Deg F

Content: Ven ID# C12011

Serial #: EB0004610

Analysis Date: 11/2/2011

Shelf Life: 36 months **Expiration Date:** 11/2/2014

Component	Nominal	Actual	Accuracy	Method
Oxygen	20.9%	20.9%	+/- 1% rel	Paramagnetic
Carbon Dioxide	5.00%	5.10%	+/- 1% rel	FTIR
Nitrogen	Balance	Balance		

REFERENCE STANDARD

Std Type	Std #	Cyl #	Concentration	Exp Date
GMIS	0318XA11	EB0028214	20.9700	3/18/2013
GMIS	0625HE10	EB0023062	19.8500	6/28/2012

INSTRUMENTATION

Instrument / ID	Component
Servomex 5200	O2
MKS 2031	CO2

Note: * ANALYZED ACCORDING TO EPA TRACEABILITY PROTOCOL FOR ASSAY AND CERTIFICATION OF GASEOUS CALIBRATION STANDARDS - SEPTEMBER 1997:G1
* DO NOT USE STANDARD WHEN PRESSURE IS BELOW 150 PSIG

Protocal
Specialty Gases of America, Inc

Issued by: Josh Jones

Global Calibration Gases LLC
1500 15th Avenue Drive East,
#109
Palmetto, FL 34221
Blending Plant &
Analytical Laboratory
Accreditation No: 69191
PGVP Vendor ID: N12011

EPA PROTOCOL GAS MIXTURE

Customer:	B&J Specialty Gas	Reference#:	011612 - 2
CGA:	660	Certification Date:	1/16/12
Customer PO #:		Expiration Date:	1/16/14
Cylinder #:	EB0034805	Pressure, psig:	2000

Method: This standard was analyzed according to EPA Traceability Protocol for Assay and Certification of Gaseous Calibration Standards, Procedure G1 (September 1997).

ANALYZED CYLINDER --

Components	Certified Concentration	Analytical Accuracy
NO	90.0 ppm	± 1 %
NOx	> 1 %	± 1 %
Propane	105.0 ppm	± 1 %
Methane	109.0 ppm	± 1 %
Carbon Monoxide	99.0 ppm	± 1 %
Nitrogen	BALANCE	-

REFERENCE STANDARD -

Type/SRM Sample	Cylinder#	Concentration
NO/ SRM 2735	Cal015838	784.4 ppm
NOx/ SRM 2735	Cal015838	787.5 ppm
Propane/ GMIS	EB0026425	310.9 ppm
Methane/ GMIS	EB0019166	94.6 ppm
CO/ GMIS	CC118813	95.5 ppm

INSTRUMENT -

Instrument/Model	Serial #	Last Date Calibrated	Analytical Method
California Analytical Instrument Model 600	Y09003	1/5/12	Chemiluminescence
Agilent	US02002031	1/10/12	Thermal conductivity

These mixtures were prepared gravimetrically using a high load high sensitivity electronic scale. Prior to filling the scale is verified for accuracy throughout the target mass range against applicable NIST traceable weights. We certify that the weights are calibrated to ASTM E617-97 Class 1 tolerances. This calibration is referenced by serial # 7210-1, Certificate # 511635 and NIST Inst # 822/272103-06. This report states accurately the results of the investigation made upon the material submitted to the analytical laboratory. Every effort has been made to determine objectively the information requested. However, in connection with this report, Global Calibration Gases LLC shall have no liability in excess of the established charge for this service. Assayed at Global Calibration Gases LLC, Palmetto, Florida. *Do not use this standard when cylinder pressure is below 150 psig.

Principal Analyst: _____ Reviewer: _____

Date: 1/16/12 Date: 1-16-2012

B&J Welding Supply
Lamesa, Tx

Accreditation No 69191

PGVP Vendor ID N12012

EPA Protocol Gas Mixture

Customer:	B&J Welding Supply	Reference#:	011112-1
CGA:	660	Certification Date:	01/11/2012
Customer PO#	17784	Expiration Date:	01/11/2014
Cylinder #:	EB0032807	Pressure, psig:	2000

Method: This standard was analyzed according to EPA Traceability Protocol for Assay and Certification of Gaseous Calibration Standards, Procedure G1 (September 1997)

Analyzed Cylinder-

Components	Certified Concentration	Analytical Accuracy
Nitric Oxide	251.4 ppm	+/-1%
NOx	<1%	+/-1%
Carbon Monoxide	257 ppm	+/-1%
Methane	248.6 ppm	+/-1%
Propane	251.6 ppm	+/-1%
Nitrogen	Balance	-

Reference Standard-

Type/SRM Sample	Cylinder #	Concentration
NO/SRM 2735	Cal015838	784.4 ppm
Nox/ SRM 2735	Cal015838	787.5 ppm
CO/ GMIS	EB0019151	1.96%
Propane/ GMIS	CC80936	2984 ppm
Methane/ GMIS	EB0026384	148.3 ppm

Instrument-

Instrument/ Model	Serial Number	Last Date Calibrated	Analytical Method
California Analytical Instument Model 600	Y09003	01/06/2012	Chemiluminescence
Agilent Quad Series	US02002031	01/11/12	Thermal Conductivity
Rosemount 880A	F-04300088	01/04/2012	Non-Dispersive Infrared

These mixtures were prepared gravimetrically using a high load high sensitivity electronic scale. Prior to filling the scale is verified for accuracy throughout the target mass range against applicable NIST traceable weights.

We certify that the weights are calibrated to ASTM E617-97 Class 1 tolerances. This calibration is referenced by serial # 7210-1, Certificate # 511635 and NIST Inst # 822/272103-06.

This report states accurately the results of the investigation made upon the material submitted to the analytical laboratory. Every effort has been made to determine objectively the information requested. However, in connection with this report, Global Calibration Gases LLC shall have no liability in excess of the established charge for this service. Assayed at Global Calibration Gases LLC, Palmetto, Florida.

*Do not use this standard when cylinder pressure is below 150 psig.

Produced by:

Global Calibration Gases LLC.
1500 15th Avenue Drive, East Suite# 109
Palmetto, Florida 34221
Accreditation No.: 69191
PGVP Vendor ID.: N12012

Principal Analyst: _____ **Date:** 1-11-12

Principal Reviewer: _____ **Date:** 1-11-12

Nolan, Shiver

From: Heap, James K
Sent: Monday, May 12, 2014 3:08 PM
To: 'stacktest.aqb@state.nm.us'; Nolan, Shiver
Cc: Thompson, Roger A; Babinski, Dina J.; Sage, Sondra, NMENV (Sondra.Sage@state.nm.us); Morris, Allan, NMENV
Subject: Annual Monitoring Report
Attachments: 14-0152-2_EPROD_SCarlsbad_T2_AnnualReport.pdf; 14-0152-1_EPROD_SCarlsbad_T1_AnnualReport.pdf; Test Report T1&T2 Annual monitoring MAY2014.pdf

Pursuant to Section A205 of Permit P130-R2, attached is the submittal form and Periodic Test-report for:
Enterprise Field Services LLC
South Carlsbad Compressor Station
AIRS: 350150044, Operating Permit (Title V): P130-R2

If you have any questions or require further information, please contact me using the info below.

Regards
++++++++++++++++++++++++++++++++
Jim Heap Sr. Field Environmental Scientist
Enterprise Products, LLC
Midland, Texas USA
Office: 432-686-5404
Cell: 432-260-0239
jkheap@eprod.com

New Mexico Environment Department
Air Quality Bureau
1301 Siler Road Building B
Santa Fe, NM 87507
Phone (505) 476-4300 Fax (505) 476-4375

Version 1/1/2010

NMED USE ONLY	
DTS	
TEMPO	

UNIVERSAL STACK TEST NOTIFICATION, PROTOCOL AND REPORT FORM

NMED USE ONLY	
Staff	
Admin	

Submit to: Stacktest.aqb@state.nm.us

I. DATABASE HEADER INFORMATION (drop down menus in bold)

a. AI#		
0218	Test Report	Periodic Test (EPA Method)

d. Company Name:	e. Facility Name:
Enterprise Field Services LLC	South Carlsbad Compressor Station

f. Emission Unit Numbers:	g. Emission Unit Description (boiler, Waukesha 7042, etc)
T1, T2	Turbines: GE Solar T4702

h. Reports - Tracking Number from notification response:	i. Proposed Test Date:	j. Actual test date:
CMT	30MAY2014	03JAN14,04JAN14

k. Reason for test (name permit requirement, NSPS, MACT, consent decree, etc. Indicate here is this notification is a revised test date only)
Annual Performance Test of existing engines pursuant to Title V Permit A205 A.

II. GENERAL COMPANY AND FACILITY INFORMATION

a.Company Address:			k.. Facility Address:		
PO Box 4324			Roberson Road, Eddy County		
b. City:	c. State:	d. Zip:	l. City:	m. State:	n. Zip:
Houston	TX	77210	Loving	NM	88526
e. Environmental Contact:	f. Title:		o. Facility Contact:	p. Title:	
Jim Heap	Sr. Env. Scientist		Dave Kresta	Area Mgr. - OPS	
g. Phone Number:	h. Cell Number:		q. Phone Number:	r. Cell Number:	
432-686-5404	432-260-0239		432-943-1801	325-277-5728	
i. Email Address:			s. Email Address:		
jkheap@eprod.com			dkresta@eprod.com		
j. Title V Permit Number:			t. NSR Permit Number:		
P-130-R2			0220-M7		

u. Detailed driving directions from nearest New Mexico town:
From Loving: US385N to Roberson Road West
Roberson Road west to station.

III. TESTING FIRM

a. Company:			g. Contact:	
Nordon Corporation			Shunil Jacob	
b. Address 1:			h. Title:	
PO Box 1415			Operations Manager	
c. Address 2:			i. Office Phone:	j. Cell Phone:
			512-355-3786	512-750-9226
d. City:	e. State:	f. Zip:	k. Email Address:	
Round Rock	TX	78680	shunil@nordoncorp.com	

IV. EMISSION UNIT

a. Emission Unit Number:	b. Make & Model Number
1 and 2	**GE Solar Centaur T-4702**
c. Serial Number:	d. Permitted Capacity:
1. OHD10C7915, 2. OHE12C7057	**3609 hp**

e Exceptions: Explain if test is late, rescheduled, related to an enforcement action:

NA

g. Emission Unit Description and brief process name or description:

Natural-gas fired turbines and compressors, processing field gas.

h. Installation Date:	i. Startup Date:	k. Date Reached Max. Capacity:

l. Control Equipment Description as listed in permit (model, ser. # etc. if applicable):

NA

STACK PARAMETERS

m. Velocity (ft/sec):

n. Temperature (°C):

o. Stack Diameter, D (in.):

p. Distance to Stack Bends or Obstructions:

Upstream, Distance A (in.):

Downstream, Distance B (in.):

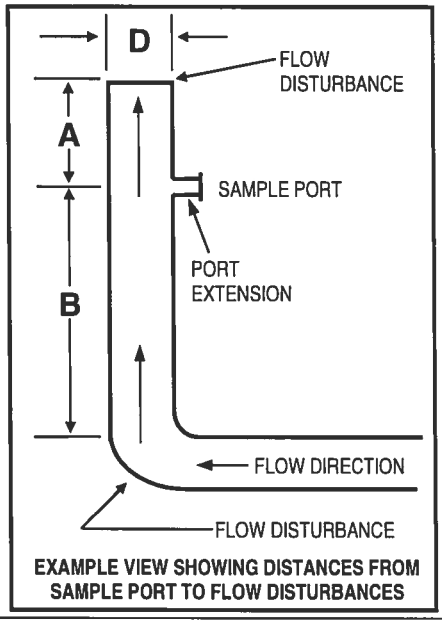

EXAMPLE VIEW SHOWING DISTANCES FROM SAMPLE PORT TO FLOW DISTURBANCES

Attach an explanation or drawing to explain any difficult or unusual stack geometry or parameters.

V. POLLUTANTS AND PROPOSED TEST METHODS

Pollutant or Parameter:		Proposed Test Methods (Deviations from approved methods require supporting documentation and prior authorization)	Deviation to Test Method Requested
☐	**Portable Analyzer Methods for NOx, CO, SO_2**		☐
☒	NOx	**EPA Method 7E**	☐
☒	CO	**EPA Method 10**	☐
☐	SO2	**EPA Method 6**	☐
☐	VOCs	**(Specify)**	☐
☐	HAPs	**(Specify)**	☐
☐	PM (TSP)	**EPA Method 5**	☐
☐	PM10	**EPA Method 201**	☐
☐	PM2.5	**(Specify)**	☐
☐	Opacity	**EPA Method 9**	☐
☐	Visual E.	**EPA Method 22**	☐
☐	Stack Flow	**EPA Methods 1 - 3**	☐
☐	Moisture	**EPA Method 4**	☐
☒	Other	**(Specify) Method 3A (O2)**	☐
☒	Other	**(Specify) Method 19 (Stack Flow)**	☐

List Specific VOC's and HAP's:

VI. PROPOSED TEST RUN AND TEST LOAD INFORMATION

a. Number of Test Runs:	b. Run Duration	c. Required by (regulation or permit number):	d. Specific Condition or Section:
3	**00:30:00**	**Title V Permit P130-R2**	**A205 A.**

PLEASE NOTE – Default run duration is 60 minutes, unless otherwise specified by an applicable regulation.

e. Expected Load:	f. Percent of Permitted Capacity:	g. Is this an opacity test?	h. If yes, no. of observation pts.:
	90-110%	Yes ☐ No ☒	

i. If expected load during test is less than 90% of capacity, explain:

NOTE – Failure to test at 90-100% of permitted load will limit unit operation to 110% of tested load until a new initial compliance test is conducted.

PLANT OR UNIT OPERATING PARAMETERS TO BE MONITORED

j. List and explain the plant operating parameters that will be monitored and applicable permit conditions or regulatory standards.

Stack emissions of NOx and CO

VII. ADDITIONAL DETAILS (where applicable)

RATA and INSTRUMENTAL ANALYZER CALIBRATION PROCEDURES

a. Do any of the methods you are proposing utilize instrumental analyzers (i.e.; EPA Methods 3A, 6C, 7E, 10, 18, 25/25A, 320 etc.)? If yes, briefly describe analyzer calibration procedures and/or calibration standard procedures. Enter the highest pollutant concentration expected and the proposed concentrations of calibration gases. ☐ Yes ☒ No

SAMPLING TRAIN LEAK CHECK PROCEDURES

b. Do any of the methods you are proposing utilize the EPA Method 5 sampling train (i.e.; EPA Methods 1-4, 5, 17, 26/26A, 29, etc.)? If yes, briefly describe sampling train and pitot tube leak check procedures: ☐ Yes ☒ No

EPA METHOD 19 IN LIEU OF EPA METHODS 1-4

c. Are you proposing to utilize EPA Method 19 in lieu of EPA Methods 1-4? If yes, explain why you believe this proposal is justified: ☒ Yes ☐ No

Method 19 is being used to avoid specific safety concerns regarding the uninsulated stack (burn hazard).

PLEASE NOTE – EPA Method 19 may be utilized in lieu of EPA Methods 1-4, subject to the approval of the Department. If you are proposing to utilize EPA Method 19 in lieu of EPA Methods 1-4, you MUST include a recent fuel gas heating value analysis as well as a recent fuel flow meter calibration certificate, preferably conducted on the day of the test, but no earlier than three months prior to the test date. If the analyses have been conducted prior to the test date, you MUST append the certificates to the protocol. If conducted on the day of the test, you MUST append the certificates to the final test report.

VIII. ATTACHMENTS (as needed to support proposed test; check all that apply)		
NOTIFICATION/PROTOCOL ATTACHMENTS		
☐	Road Map Indicating Directions from Nearest New Mexico Town to Facility	
☐	Schematic of process being tested showing emission points, sampling sites and stack cross-section	
☐	Copy of proposed test methods (except for those promulgated test methods found in 40 CFR 51, 60, 61 and 63)	
☐	Fuel Heating Value Analysis	
☐	Fuel Flow Meter Calibration Certificate	
☐	Other:	
☐	Other:	
TEST REPORT ATTACHMENTS		
☒	**Section 2. Tables of Results**	
☐	**Supporting Documents (Specify)**	
Retain Report Section 3 - Test Procedures, Data, Calculations, Appendices – 2 years NSR permits, 5 years TV		

IX. CERTIFICATION		
This document has been prepared under my supervision and is accurate and complete to the best of my knowledge. I understand that acceptance of this protocol does not waive the requirements of any permit or regulation. I understand that any procedural errors or omissions are the sole responsibility of the permit holder.		
Signature: 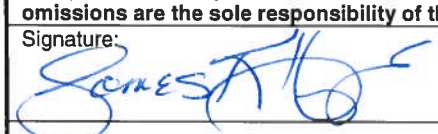	Print Name and Title: **James K. Heap, Senior Environmental Scientist**	Date: **12MAY2014**
Responsible Official for Title V? ☐ Yes	☒ No (R.O signature not required for routine periodic testing)	

Heap, James K

From: Sage, Sondra, NMENV <Sondra.Sage@state.nm.us>
Sent: Thursday, May 01, 2014 4:11 PM
To: Heap, James K
Cc: Morris, Allan, NMENV; Samaniego, Robert, NMENV
Subject: FW: Test Substitution Request

Mr. Heap,

Following a review of the additional information you provided regarding the previous periodic test, it appears that the test conducted for Initial GG compliance falls within the required timeframe for the Annual Monitoring test. If you wish to reformat the results and use them for the Annual Monitoring Test, please submit a test protocol showing the test as the Annual Monitoring Test , then submit the results in the appropriate format. This will essentially qualify as a case of enforcement discretion, since it will require waiving the 30 day notice for the test, as well as the requirement to report the test in a timely manner. This acceptance of the GG Initial Test results for the Annual Monitoring Test is applicable only to this instance. If, in future, you wish to use the results of a single testing event to comply with two requirements, it will be necessary to submit timely testing notifications and testing results indicating this is the case. It will not be acceptable to request this after the fact in future instances.

Sondra Sage
Compliance Specialist
NMED-Air Quality Bureau
525 Camino de los Marquez, Suite 1
Santa Fe, NM 87505
(505)476-4358
"Never cruel nor cowardly. Never give up, never give in." - the Doctor

---

From: Morris, Allan, NMENV
Sent: Wednesday, April 30, 2014 10:30 AM
To: Sage, Sondra, NMENV
Cc: Samaniego, Robert, NMENV
Subject: FW: Test Substitution Request

From: Heap, James K [mailto:JKHEAP@eprod.com]
Sent: Tuesday, April 29, 2014 6:11 PM
To: Morris, Allan, NMENV; Nolan, Shiver
Cc: Thompson, Roger A; Babinski, Dina J.; Shunil Jacob
Subject: Test Substitution Request

Pursuant to your request during our phone call today, I am providing you detail regarding Enterprise's desire to utilize our January Initial GG test for the permit required Annual Monitoring Test at the South Carlsbad Compressor Station (0218).

Annual Emission Test Report
for one
Solar Centaur T4702 Compressor Turbine
Unit Number T1
located at the
South Carlsbad Compressor Station

Prepared for
Enterprise Field Services, LLC
P. O. Box 4324
Houston, TX 77210

January 2014
Nordon Project No. 14-0152-1

This test report has been reviewed and approved for submittal to the New Mexico Environment Department (NMED) by the following representatives:

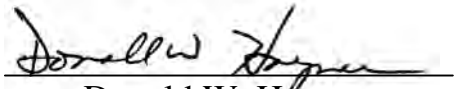

Donald W. Haynes
Nordon Corporation

Enterprise Field Services, LLC

NORDON *CORPORATION*

P. O. Box 1415 Round Rock, Texas 78680
Phone (512) 355-3786 Fax (512) 355-3785

SUMMARY OF RESULTS

Exhaust emission testing was performed on one Solar Centaur T4702 (Unit # T1) compressor turbine for Enterprise Field Services, LLC located at the South Carlsbad Compressor Station, near Loving, Eddy County, New Mexico. The turbine is used for natural gas compression. The testing was performed to demonstrate the continued compliance with the emission limits set forth in the NMED permit. Nordon Corporation of Round Rock, Texas, performed the exhaust emissions testing on January 3, 2014.

Continuous emission instruments housed in a mobile analysis unit were used to determine the concentrations of NO_X, CO, and O_2 in the exhaust stack of the compressor turbine. The following Code of Federal Regulations, Title 40, Part 60 (40CFR60), Appendix A reference methods were used to determine stack gas concentrations: Method 7E for nitrogen oxides (NO_X), Method 10 for carbon monoxide (CO), and Method 3A for oxygen (O_2). Mass emission rates were determined stoichiometrically according to Method 19 data reduction procedures using measured fuel flow rate.

Three thirty-minute test runs were performed on the exhaust of the turbine while firing on natural gas. The results of the testing are presented in a summary of results table. This table includes all the relevant information pertaining to the turbine/compressor operations, exhaust emissions, and ambient conditions. Exhaust concentrations are presented in part per million by volume (ppmv) or percent (%) by volume. The mass emission rates are presented in pound per hour (lb/hr) and ton per year (tpy). Turbine/compressor operational data was collected during each test run.

Summary of Results

NORDON CORPORATION

P.O. Box 1415 Round Rock, Texas 78680
PHONE (512) 355-3786 • FAX (512)355-3785

Plant: South Carlsbad Compressor Station
Facility Owner:Enterprise Field Services, LLC
Location: Loving, Eddy County, New Mexico
Unit Make/Model: Solar Centaur T4702
Unit Number: T1 , Ser. No.OHD10C7915
Test Personnel: DWH / KRJ

RUN NUMBER	DH-010314.01	DH-010314.02	DH-010314.03	
Date	1/3/14	1/3/14	1/3/14	
Start Time (hr)	9:23	10:12	10:49	
Stop Time (hr)	10:04	10:42	11:19	
TURBINE DATA				
Rated Horsepower (Hp)	3609	3609	3609	
Fuel Pressure (psig)	193	195	207	
Gas Producer Speed (%)	94.8	94.8	94.8	
Power Turbine Speed (%)	92.8	92.3	91.9	
Turbine Compressor Discharge Pressure (psig)	105	104	102	
Exhaust Temperature (°F)	1078	1082	1091	
Horsepower (Hp)	3508	3478	3418	
Heat Rate (MMBtu/hr)	43.0	43.0	42.4	
COMPRESSOR DATA				
Suction Pressure (psig)	293	294	295	
Suction Temperature (°F)	58	62	64	
Discharge Pressure (psig)	529	532	535	
Discharge Temperature (°F)	145	147	148	
Gas Production (MMscfd)	37	38	37	
FUEL & EXHAUST DATA				
O2 F-factor (dscf/MMBtu)	8698	8698	8698	
Fuel Heating Value (HHV Btu/scf)	1098	1098	1098	
Stoichiometric Exhaust Flow (dscfh)	1.94E+06	1.96E+06	1.96E+06	
AMBIENT CONDITIONS				
Temperature (°F): Dry bulb	39	44	47	
Temperature (°F): Wet bulb	32	37	39	
Atmospheric Pressure ("Hg)	26.90	26.88	26.84	
Humidity (lb water/lb air)	0.0026	0.0035	0.0037	
Humidity (% vol)	0.4	0.5	0.6	
MEASURED EXHAUST OUTLET CONCENTRATIONS				**AVERAGES**
NOx (ppmv)	74.0	74.1	75.0	**74.4**
CO (ppmv)	15.2	14.0	13.7	**14.3**
O2 (%)	16.9	16.9	17.0	**16.9**
EMISSION RATES				
NOx (lb/hr) LIMIT=27.0	17.14	17.36	17.57	**17.35**
CO (lb/hr) LIMIT=7.4	2.14	2.00	1.95	**2.03**
NOx (tpy, @8760 hr/yr) LIMIT=118.3	75.06	76.03	76.95	**76.01**
CO (tpy, @8760 hr/yr) LIMIT=32.5	9.39	8.77	8.55	**8.91**

PROCEDURES

Continuous emission instruments housed in the mobile analysis unit were used to determine the concentrations of pollutants found in the turbine exhaust stack. The following 40CFR60, Appendix A reference methods were used to determine stack gas concentrations: Method 7E for NO_X, Method 10 for CO, and Method 3A for O_2. Mass emission rates were determined according to data reduction procedures provided in Method 19.

As depicted in Figure 1, Sample System and Instrumentation, a stainless steel sample probe was located in the centroid of the stack. Sample gas enters the stainless steel probe into a stainless steel 3-way valve. The 3-way valve is used to perform leak checks and sample system bias checks. From the valve, the gas flows through a 3/8" Teflon® heat traced sample line to a stainless steel minimum contact condenser to dry the sample. From the condenser, a 3/8" Teflon sample line brings the exhaust gas to a manifold in the mobile analysis unit via a Teflon-lined diaphragm pump. The manifold partitions the gas through quick-connects so that each instrument can directly sample exhaust gas. Each instrument is equipped with a rotometer to maintain correct sample pressure and flow. The instruments are connected to a computer data acquisition system to document its response during quality assurance activities and testing.

Figure 1: Sample System and Instrumentation

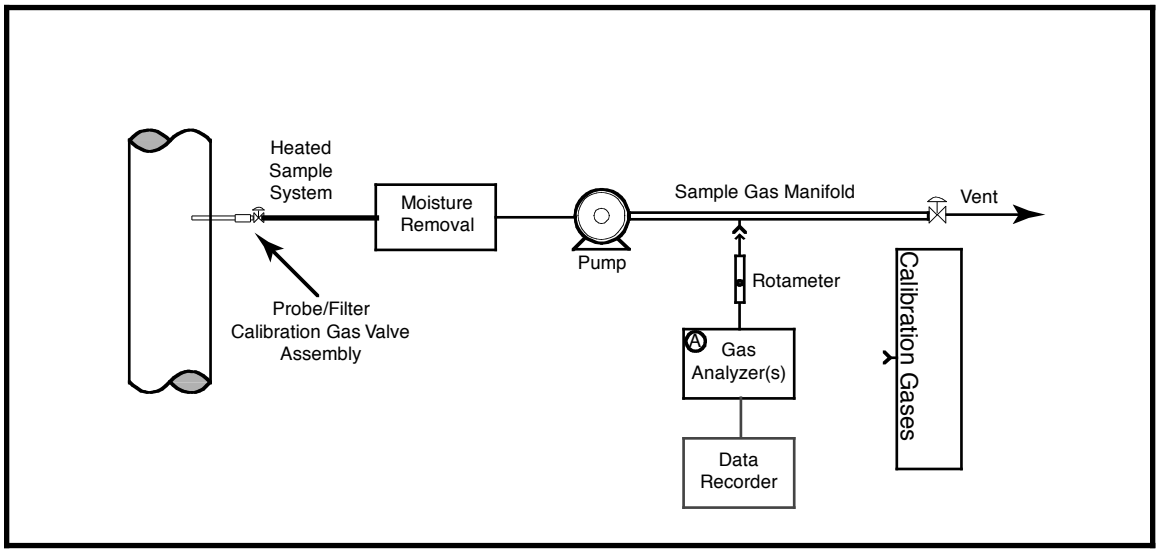

(A) Gas Analyzers - NO_X, CO, O_2

Analyzer Make	Analyzer Model	Detection Principle
NO_X Analyzer: Thermo Environmental	42i-HL	Chemiluminescence
CO Analyzer : Thermo Environmental	48i-HL	Non-dispersive Infra-red
O_2 Analyzer: Thermo Environmental	48i-HL	Paramagnetic Cell

A continuous analyzer is used to determine NO_X concentrations according to EPA Reference Method 7E. This instrument employs a chemiluminescent detection principle. The NO_X concentration and mass emission rates are expressed as NO_2 per the reference method.

A continuous analyzer is used to determine CO concentrations according to EPA Reference Method 10. The instrument employs a nondispersive infrared detector coupled to a gas filter correlation wheel, which eliminates the interferences due to water and carbon dioxide.

A continuous analyzer is used to determine O_2 concentrations according to EPA Reference Method 3A. The instrument is equipped with either an electrochemical or paramagnetic cell.

Data obtained from the continuous emission analyzers were recorded by a National Instruments data acquisition (DAQ) system using Labview software. A copy of the DAQ records can be found in the appendix of this report.

Quality assurance activities meeting the requirements of the EPA reference methods were performed during the turbine testing. Tables documenting quality assurance procedures are located in the appendix of this report.

Exhaust flow rate was determined according to the data reduction procedures provided in EPA Method 19. The O_2 F-Factor used in the emission rate calculation was either calculated based on a recent fuel analysis or the standard 8710 value for natural gas provided by EPA Method 19.

Nordon personnel recorded turbine compressor operating parameters. Ambient conditions were collected using a wet/dry bulb sling psychrometer to measure temperature and a barometer to measure absolute atmospheric pressure.

APPENDIX

Field Data Sheets
Example Calculations
Gas Certifications
Quality Assurance Activities
DAQ Records

C_1	86.893
C_2	6.8402
C_3	2.5624
n-C_4	0.5497
i-C_4	0.2817
n-C_5	0.0813
i-C_5	0.0928
C_6	0.0534
C_{7+}	0.0813
N_2	1.1928
CO_2	1.4528

Plant: South Carlsbad Compressor Station	
Facility Owner: Enterprise	
Unit Owner: Enterprise	
Location: Loving, Eddy County, New Mexico	
Applicable Regulation: 40CFR60, Subpart GG	
Unit Make/Model: Solar Centaur T-4702	
Unit Number: T1	Ser. No. OHD10C7915
Test Personnel: DWH / KRJ	
Date: 1/3/14	

Run Number	01	02	03	04	05	06	07	08	09	10	11	12
Start Time	~~1023~~	~~1112~~	~~1149~~	~~1226~~	~~1303~~	~~1340~~	~~1417~~	~~1454~~	1431	1508	1545	1622
~~Stop Time~~	923	1012	1049	1126	1203	1240	1317	1354				
Turbine/Compressor Operation												
Load Condition	Max	Max	Max									
Fuel Flow (Mscfd)	941	941	926	847	871	865	652	890	884	636	741	677
Fuel Flow (scfh)												
Power Turbine Speed (%)	92.8	92.3	9.19	91.6	90.9	90.6	90.1	89.4	89.1	89.3	89.2	89.8
Gas Producer Speed (%)	94.8	94.8	94.8	94.7	94.8	94.8	94.8	94.8	94.8	94.8	94.8	94.8
Horsepower (hp)												
Rated Horsepower (hp)	3609	3609	3609	3609	3609	3609	3609	3609	3609	3609	3609	3609
% Load												
Turbine Compressor Discharge, PCD (psig)	105	104	102	102	100	99	98	98	97	98	98	100
Turbine Temperature T5 (°F)	1078	1082	1091	1092	1100	1102	1109	1111	1113	1106	1104	1103
Gas Compressor Suction Pressure (psig)	293	294	295	296	300	304	307	311	313	314	314	313
Gas Compressor Discharge Pressure (psig)	~~528~~529	532	535	530	523	521	523	524	526	527	529	531
Gas Compressor Suction Temperature (°F)	58	62	64	64	68	70	72	74	74	76	72	70
Gas Compressor Discharge Temperature (°F)	145	147	148	148	151	152	152	153	155	156	151	148
Fuel Gas Pressure (psig)	193	195	207	191	189	190	195	191	195	191	189	192
Gas Flow (MMscfd)	~~37~~ 37	38	37	38	37	37	37	37	37	38	39	40
Δt, ft.	2880	2900	2940	2960	3000	3020	3040	3060	3060	3080	3080	3100
Ambient Conditions												
Barometric Pressure (absolute In. Hg)	26.90	26.88	26.84	26.82	26.78	26.76	26.74	26.72	26.72			
Temperature Dry (°F)	39	44	47	49	55	60	62	67	68	65	63	55
Temperature Wet (°F)	32	37	39	40	43	46	47	49	49	48	47	44

C

Houston Laboratories
8820 Interchange Drive
Houston, TX 77054
Phone 713-660-0901

Certificate of Analysis

Number: 1030-14010388-001A

Jan. 21, 2014

Thor Olsen
Nordon Corporation
PO Box 1415
Round Rock, TX 78680

Station Name:	South Calrsbad Compressor Stition	Sampled By:	
Station Location:	Loving, NM	Sample Of:	Gas Spot
Sample Point:	Turbine Fuel Gas	Sample Date:	01/04/2014 10:00
Cylinder No:	0298	Sample Conditions:	190 psig, @ 65 °F
Analyzed:	01/16/2014 05:34:22 by JD	Method:	GPA-2261M

Analytical Data

Components	Mol. %	Wt. %	GPM at 14.65 psia		
Nitrogen	1.204	1.797		GPM TOTAL C2+	2.870
Carbon Dioxide	1.556	3.648		GPM TOTAL C3+	1.036
Methane	86.800	74.184		GPM TOTAL iC5+	0.077
Ethane	6.877	11.016	1.834		
Propane	2.516	5.911	0.691		
Iso-butane	0.292	0.904	0.095		
n-Butane	0.552	1.709	0.173		
Iso-pentane	0.086	0.331	0.031		
n-Pentane	0.072	0.277	0.026		
Hexanes Plus	0.045	0.223	0.020		
	100.000	100.000	2.870		

Physical Properties	Total	C6+
Relative Density Real Gas	0.6496	3.2176
Calculated Molecular Weight	18.77	93.19
Compressibility Factor	0.9973	
GPA 2172-09 Calculation:		
Calculated Gross BTU per ft³ @ 14.65 psia & 60°F		
Real Gas Dry BTU	1097	5113
Water Sat. Gas Base BTU	1078	5024

Comments: H2O Mol% : 1.750 ; Wt% : 1.681
Reran Sample Confirmed GC Analysis

Hydrocarbon Laboratory Manager

Quality Assurance: The above analyses are performed in accordance with ASTM, UOP, GPA guidelines for quality assurance, unless otherwise stated.

Fuel Gas Analysis

Gross Btu/scf	**1098**
O_2 F-Factor dscf/MMBtu	**8698**
O_2 F-Factor (wscf/MMBtu)	**10660**
H_2O F-Factor (scf/MMBtu)	**1962**
CO_2 F-Factor (scf CO_2/MMBtu)	**1058**
Btu/lb	**22164**
Sp. Gr.	**0.6516**
F_o	**1.719**
Moisture Factor	**18.407**
VOC Fraction	**0.063**

Compound	**Mol. Formula**	**Mol. %**
Methane	CH4	86.800
Ethane	C2H6	6.877
Propane	C3H8	2.516
Isobutane	C4H10	0.292
n-Butane	C4H10	0.552
Isopentane	C5H12	0.086
n-Pentane	C5H12	0.072
NeoPentane	C5H12	
n-Hexane	C6H14	0.045
n-Heptane	C7H16	
n-Octane	C8H18	
Carbon dioxide	CO2	1.556
Nitrogen	N2	1.204
Total		100.000

Chain of Custody Form

REPORT TO:

Company: Nordon Corporation
Contact: Don Haynes
Contact Phone: 512-355-3786
Contact Email: don@nordoncorp.com

PROJECT INFO:

Client Name: Enterprise Products
Facility Name: South Carlsbad Compressor Station
Facility Location: Loving, NM
Project #: 14-0001

LABORATORY INFO:

Company: SPL, Inc.
Address: 8820 Interchange Dr
Address: Houston, TX 77054
Contact: Chris Staley
Contact Info: cstaley@spl-inc.com
Lab Project#:

NORDON Corporation
P.O Box 1415 Round Rock, TX 78680
PH: 512.355.3786 FAX: 512.355.3785

Turn Around Time

☒ Standard
☐ Rush
specify RUSH date(s):

Lab ID	Sample Identification	Sample Description	Collection Date	Analysis Requested: Method 323 (HCHO)	CTM-027 (NH3)	EPA Method 5	EPA Method 201a	EPA Method 202	ASTM D6667	ASTM D1945	Sample Matrix	Container Type	Remarks (volumes,special notes, etc.)
	1030-00406	natural gas	1/4/14						x	x	natural gas	cylinder	
	1030-00298	natural gas	1/4/14						x	x	natural gas	cylinder	

Relinquished By: C. Lane **Date:** 1-13-14
Received By: **Date:** 1-13-14

Relinquished By: **Date:**
Received By: JAVIER GUZ **Date:** 1/14/14 15:01

NOTES:

Page 1 of 1

Example Calculations: Method 7E Concentration Correction

Test Run #: DH-010314.01 **Component: NOx**

Observed Measurements/Data:		**Scale, Certified Concentrations**	
	Direct Calibration Results		
0.17	NOx direct zero, Cdiro	94.7	NOx chart scale, CS
95.20	NOx direct span, Cdirm	94.7	NOx actual calibration gas concentration, Cma
	System Calibration Results	0	Actual low-level gas concentration, Coa
2.74	NOx, initial zero reading, Csoi		
92.63	NOx inital span reading, Csmi		
2.72	NOx final zero reading, Cof		
91.44	NOx final span reading, Csmf		
	Run Results		
72.48	NOx run average, Caverage		

Bias Check Initial Zero (SBoi)

$$SBoi = \frac{(Csoi - Cdiro)}{CS}$$

= 2.71 (%)

Bias Check Initial Span (SBmi)

$$SBmi = \frac{(Csmi - Cdirm)}{CS}$$

= -2.72 (%)

Bias Check Final Zero (SBof)

$$SBof = \frac{(Csof - Cdiro)}{CS}$$

= 2.69 (%)

Bias Check Final Span (SBmf)

$$SBmf = \frac{(Csmf - Cdirm)}{CS}$$

= -3.97 (%)

Drift Check Zero (Do)

$$|SBof - SBoi|$$

= 0.03

Drift Check Span (Ds)

$$|SBmf - SBmi|$$

= 1.26

Bias- Average Zero (Coavg)

$$= \left(\frac{Csoi + Csof}{2}\right)$$

= 2.730 (ppmv)

Bias-Average Span (Cmavg)

$$= \left(\frac{CSmi + CSmf}{2}\right)$$

= 92.04 (ppmv)

NOx Concentration Correction

$$= (Caverage - Coavg) \times \left(\frac{Cma}{Cmavg - Coavg}\right)$$

74.0 (ppmv)

Example Calculations: Method 7E Concentration Correction

Test Run #: DH-010314.01 **Component: CO**

Observed Measurements/Data:		**Scale, Certified Concentrations**	
	Direct Calibration Results		
-0.02	CO direct zero, Cdiro	193	CO chart scale, CS
193.21	CO direct span, Cdirm	193	CO actual calibration gas concentration, Cma
	System Calibration Results	0	Actual low-level gas concentration, Coa
-0.71	CO, initial zero reading, Csoi		
192.18	CO inital span reading, Csmi		
-1.00	CO final zero reading, Cof		
191.53	CO final span reading, Csmf		
	Run Results		
14.33	CO run average, Caverage		

Bias Check Initial Zero (SBoi)

$$SBoi = \frac{(Csoi - Cdiro)}{CS}$$

= -0.35 (%)

Bias Check Initial Span (SBmi)

$$SBmi = \frac{(Csmi - Cdirm)}{CS}$$

= -0.53 (%)

Bias Check Final Zero (SBof)

$$SBof = \frac{(Csof - Cdiro)}{CS}$$

= -0.50 (%)

Bias Check Final Span (SBmf)

$$SBmf = \frac{(Csmf - Cdirm)}{CS}$$

= -0.87 (%)

Drift Check Zero (Do)

$$|SBof - SBoi|$$

= 0.15

Drift Check Span (Ds)

$$|SBmf - SBmi|$$

= 0.34

Bias- Average Zero (Coavg)

$$= \left(\frac{Csoi + Csof}{2} \right)$$

= -0.851 (ppmv)

Bias-Average Span (Cmavg)

$$= \left(\frac{CSmi + CSmf}{2} \right)$$

= 191.85 (ppmv)

CO Concentration Correction

$$= (Caverage - Coavg) \times \left(\frac{Cma}{Cmavg - Coavg} \right)$$

15.2 (ppmv)

Example Calculations: Method 7E Concentration Correction

Test Run #: DH-010314.01 **Component: O2**

Observed Measurements/Data:		**Scale, Certified Concentrations**	
	Direct Calibration Results		
0.05	O2 direct zero, Cdiro	20.92	O2 chart scale, CS
11.02	O2 direct span, Cdirm	10.99	O2 actual calibration gas Concentration, Cma
	System Calibration Results	0	Actual low-level gas Concentration, Coa
0.05	O2, initial zero reading, Csoi		
10.98	O2 inital span reading, Csmi		
0.16	O2 final zero reading, Csof		
10.99	O2 final span reading, Csmf		
	Run Results		
16.81	O2 run average, Caverage		

Bias Check Initial Zero (SBoi)

$$SBoi = \frac{(Csoi - Cdiro)}{CS}$$

= 0.03 (%)

Bias Check Initial Span (SBmi)

$$SBmi = \frac{(Csmi - Cdirm)}{CS}$$

= -0.18 (%)

Bias Check Final Zero (SBof)

$$SBof = \frac{(Csof - Cdiro)}{CS}$$

= 0.55 (%)

Bias Check Final Span (SBmf)

$$SBmf = \frac{(Csmf - Cdirm)}{CS}$$

= -0.16 (%)

Drift Check Zero (Do)

$$|SBof - SBoi|$$

= 0.51

Drift Check Span (Ds)

$$|SBmf - SBmi|$$

= 0.02

Bias- Average Zero (O2avg)

$$= \left(\frac{Csoi + Csof}{2} \right)$$

= 0.107 (%)

Bias-Average Span (Cmavg)

$$= \left(\frac{CSmi + CSmf}{2} \right)$$

= 10.99 (%)

O2 Concentration Correction

$$= (Caverage - Coavg) \times \left(\frac{Cma}{Cmavg - Coavg} \right)$$

16.9 (%)

Example Calculations: Method 19 Exhaust Flow

Test Run #: DH-010314.01 **Component: Stack Flow**

Observed Measurements/Data:		**Standards/Constants/Conversion Factors**	
39208	Fuel Flow Rate (scfh)	1000000	Btu per MMBtu
8698	Fuel O2 F-Factor (dscf/MMBtu)	20.9	O2 % in air
1098	Fuel Heating Value (Btu/scf)		
16.9	O2 final concentration (%)		

Derivation of Exhaust Flow using Equation 19-1 from Method 19

$$E\left(\frac{lb}{MMBtu}\right) = C_d\left(\frac{lb}{scf}\right)F_d\left(\frac{dscf}{MMBtu}\right)\times\frac{20.9}{\left(20.9-\%O_2\right)} \qquad \text{Eq. 19-1}$$

divide each side of equation by Cd to obtain the following

$$\left(\frac{scf}{MMBtu}\right) = F_d\left(\frac{dscf}{MMBtu}\right)\times\frac{20.9}{\left(20.9-\%O_2\right)}$$

multiply each side of equation by heat input (MMBtu/hr)

$$\left(\frac{scf}{hr}\right) = HeatInput\left(\frac{MMBtu}{hr}\right)\times F_d\left(\frac{dscf}{MMBtu}\right)\times\frac{20.9}{\left(20.9-\%O_2\right)}$$

Fuel Gas Heat Rate/Heat Input (MMBtu/hr)

$$= \left(\text{Fuel Flow Rate } \frac{scf}{hr}\right)\times\left(\text{Fuel Heating Value } \frac{Btu}{scf}\right)\times\left(\frac{1MMBtu}{1000000\,Btu}\right)$$

= 43.04 (MMBtu/hr)

Stack Gas Volumetric Flow Rate, Q (dscfh)

$$= \left(\text{HeatInput } \frac{MMBtu}{hr}\right)\times\left(\text{Fuel } O_2 \text{ F-Factor } \frac{dscf}{MMBtu}\right)\times\left(\frac{20.9}{20.9-O_2}\right)$$

= 1.94E+06 (dscfh)

Example Calculations: Emissions Calculations

Test Run #: DH-010314.01 **Component: NOx**

Observed Measurements/Data:		**Standards/Constants/Conversion Factors**	
74.0	NOx final concentration, Cd (ppmv)	528	EPA Standard Temperature, Tstd (°R)
1940680	Average Stack Gas Flow Rate, Q (DSCFH)	29.92	EPA Standard Pressure, Pstd (in. Hg)
16.9	O2 final concentration (%)	385.3	Gas Constant @ EPA STP (SCF/lb-mol)
3508	Horsepower (Hp)	28.317	Liters per Cubic Foot
8698	Fuel O2 Factor (DSCF/MMBtu)	46	NOx molecular wt. (NO2), MW (lb/lb-mol)
		0.001912	Conversion constant (NOx ppm to g/m3)
		8760	hours per year
		2000	pounds per ton
		0.028317	cubic meters per cubic feet

NOx Emissions (ppmv @ 15%O2): *Applicable* yes

$$= \text{ppmv@15\%O}_2 = Cd \times \left(\frac{20.9\text{-}15}{20.9\text{-O}_2 \text{ concentration (\%)}} \right)$$

= 108 ppmv @15% O2

NOx Emission Rate (g/hp-hr): *Applicable* no

$$= \left(\frac{\text{g}}{\text{HP} - \text{hr}} \right) = \frac{Cd \times .001912 \times Q \times \left(\frac{0.028317 m^3}{ft^3} \right)}{HP}$$

= NOT APPLICABLE

NOx Emission Rate (lb/hr): *Applicable* yes

$$= \left(\frac{ppmv}{10^6} \right) \times \text{Average Stack Flow,Q} \times \left(\frac{MW}{385.3} \right)$$

= 17.14 (lb/hr)

NOx Emission Rate (tons/year): *Applicable* yes

$$= \left(\frac{\text{tons}}{\text{yr}} \right) = \frac{\text{lb}}{\text{hr}} \times \frac{8760 \text{ hr}}{\text{year}} \times \frac{\text{ton}}{2000 \text{ lb}}$$

= 75.06 (tons/yr)

NOx Emissions (lb/MMBtu): *Applicable* no

$$= \left(\frac{lb}{MMBtu} \right) = \left(\frac{Cd}{10^6} \right) \times \left(\frac{MW}{385.3} \right) \times \left(\frac{DSCF}{MMBtu} \right) \times \left(\frac{20.9}{\left(20.9\text{-O}_2 \text{ concentration (\%)}\right)} \right)$$

= NOT APPLICABLE

Example Calculations: Emissions Calculations

Test Run #: DH-010314.01 **Component: CO**

Observed Measurements/Data:		**Standards/Constants/Conversion Factors**	
15.2	CO final concentration, Cd (ppmv)	528	EPA Standard Temperature, Tstd (°R)
1940680	Average Stack Gas Flow Rate, Q (DSCFH)	29.92	EPA Standard Pressure, Pstd (in. Hg)
16.9	O2 final concentration (%)	385.3	Gas Constant @ EPA STP (SCF/lb-mol)
3508	Horsepower (Hp)	28.317	Liters per Cubic Foot
8698	Fuel O2 Factor (DSCF/MMBtu)	28	CO molecular wt., MW (lb/lb-mol)
		0.001164	Conversion constant (CO ppm to g/m3)
		8760	hours per year
		2000	pounds per ton
		0.028317	cubic meters per cubic feet

CO Emissions (ppmv @ 15%O2): *Applicable* no

$$= \text{ppmv@15\%O}_2 = Cd \times \left(\frac{20.9\text{-}15}{20.9\text{-O}_2 \text{ concentration (\%)}} \right)$$

= NOT APPLICABLE

CO Emission Rate (g/hp-hr): *Applicable* no

$$= \left(\frac{\text{g}}{\text{HP} - \text{hr}} \right) = \frac{Cd \times .001164 \times Q \times \left(\frac{0.028317 m^3}{ft^3} \right)}{HP}$$

= NOT APPLICABLE

CO Emission Rate (lb/hr): *Applicable* yes

$$= \left(\frac{ppmv}{10^6} \right) \times \text{Average Stack Flow,Q} \times \left(\frac{MW}{385.3} \right)$$

= 2.14 (lb/hr)

CO Emission Rate (tons/year): *Applicable* yes

$$= \left(\frac{\text{tons}}{\text{yr}} \right) = \frac{\text{lb}}{\text{hr}} \times \frac{8760 \text{ hr}}{\text{year}} \times \frac{\text{ton}}{2000 \text{ lb}}$$

= 9.39 (tons/yr)

CO Emissions (lb/MMBtu): *Applicable* no

$$= \left(\frac{lb}{MMBtu} \right) = \left(\frac{Cd}{10^6} \right) \times \left(\frac{MW}{385.3} \right) \times \left(\frac{DSCF}{MMBtu} \right) \times \left(\frac{20.9}{\left(20.9\text{-O}_2 \text{ concentration (\%)}\right)} \right)$$

= NOT APPLICABLE

THE LINDE GROUP

Linde

CERTIFICATE OF ANALYSIS

EPA PROTOCOL MIXTURE

PROCEDURE # : G1

PGVP ID#: I12013
CUSTOMER: UNION CITY
SALES#: 501210969
PROD#: 1254051
P.O.# : 4501210969
MATERIAL#: 24091202
CERTIFICATION DATE: 01-May-2013
EXPIRATION DATE: 02-May-2021
(Using the May 2012 Revision of the EPA Protocol)

GAS CODE: APPVD
CYLINDER # : CC-310704
CYLINDER PRES: 2000 PSIG
CYLINDER VALVE: CGA 660
CYLINDER SIZE: 2A
CYLINDER MATERIAL: Aluminum
GAS VOLUME: 4000 Liter
BLEND TOLERANCE: 5% Relative
PAGE: 1 of 1

CERTIFICATION HISTORY

COMPONENT	DATE OF ASSAY	MEAN CONCENTRATION	CERTIFIED CONCENTRATION	ANALYTICAL ACCURACY
Propane	01-May-2013	30.0 ppm	30.0 ppm	+/- 1%
Nitric Oxide	24-Apr-2013 01-May-2013	47.4 ppm 47.3 ppm	47.3 ppm	+/- 1%
NOx			47.3 ppm	Reference Value Only
Carbon Monoxide	01-May-2013	95.3 ppm	95.3 ppm	+/- 1%

BALANCE Nitrogen

PREVIOUS CERTIFICATION DATES: None

REFERENCE STANDARDS

COMPONENT	SRM/NTRM#	CYLINDER#	CONCENTRATION
Propane	GMIS-1	cc-113884	100.5 ppm
Nitric Oxide	GMIS-1	CC-278874	100.7 ppm
Carbon Monoxide	GMIS-1	cc-88590	96.8 ppm

INSTRUMENTATION

COMPONENT	MAKE/MODEL	SERIAL #	DETECTOR	CALIBRATION DATE(S)
Propane	H. Packard 6890	US00001434	GC - FID	01-May-2013
Nitric Oxide	CAI 400-CLD	6L09004	Cheml	01-Apr-2013
Carbon Monoxide	Horiba VIA-510	570423011	NDIR	19-Apr-2013

THIS STANDARD IS NIST TRACEABLE. IT WAS CERTIFIED ACCORDING TO THE 1997 EPA PROTOCOL PROCEDURES. DO NOT USE THIS STANDARD IF THE CYLINDER PRESSURE IS LESS THAN 100 PSIG.

ANALYST: _____
MATTHEW JACKSON

Linde Gas North America LLC

DATE: 01-May-2013

(908) 329-9700 Main (908) 329-9740 Fax
www.LindeGas.com

Assay Laboratory: Red Ball TGS
555 Craig Kennedy Way
Shreveport, LA 71107
800-551-8150

CERTIFICATE OF ANALYSIS
EPA PROTOCOL GAS

Cylinder Number:	EB0027577	**Certification Date:**	10/29/2012
Product ID Number:	124749	**Expiration Date:**	**10/22/2016**
Cylinder Pressure:	1900 PSIG	**MFG Facility:**	RBTGS-Shreveport-LA
COA Number:	GC1210170814-0	**Lot Number:**	GC1210170814
Customer PO. NO.:		**Tracking Number:**	048358699
Customer		**Previous Certification Dates:**	

This calibration standard has been certified per the 1997 EPA Traceability Protocol, Document EPA-600/97/121, using procedure G1 and/or G2. All values so noted are certified to be +/-1% NIST Traceable.

Do Not Use This Cylinder Below 150 psig (1.0 Megapascal).

Certified Concentration(s)

Component	Concentration	Analytical Principle	Accuracy
Nitric Oxide	**94.5 PPM**	Non Dispersive Infrared Absorptiometry	**:ulate: High Unce**
Total Oxides of Nitrogen	**94.7 PPM**	Non Dispersive Infrared Absorptiometry	
Propane	**51 PPM**	FTIR	**+/- 1% NIST**
Carbon Monoxide	**193 PPM**	Gas Correlation Filter	**+/- 1% NIST**
Nitrogen	Balance		

Reference Standard(s)

Type	Component	Balance Gas	Concentration	Cylinder Number	Expiration	NIST Reference
GMIS	Nitric Oxide	Nitrogen	98.6 PPM	CC238350	2/14/2013	SRM 1686b
GMIS	Nitric Oxide	Nitrogen	98.6 PPM	CC238350	2/14/2013	SRM 1686b
GMIS	Carbon Monoxide	Nitrogen	398 PPM	EB0005726	1/5/2014	NTRM 021003
SRM	Propane	Nitrogen	49 PPM	CAL018150	8/17/2017	SRM 1667b

Analytical Information

Component	Nitric Oxide		
Analysis Date:	10/22/2012		
Z 0.152	S 16.337	C 15.549	Conc. 93.5 PPM
S 16.399	C 15.733	Z 0.109	Conc. 94.6 PPM
C 15.71	Z 0.088	S 16.451	Conc. 94.4 PPM

Analysis Date:	10/29/2012		
Z 0.295	S 16.912	C 16.321	Conc. 94.9 PPM
S 16.961	C 16.303	Z 0.281	Conc. 94.8 PPM
C 16.31	Z 0.325	S 16.9825	Conc. 94.8 PPM

Component	Carbon Monoxide		
Analysis Date:	10/22/2012		
Z 0.3390	S 41.027	C 19.9610	Conc. 192 PPM
S 41.0170	C 20.021	Z 0.294	Conc. 193 PPM
C 20.036	Z 0.3510	S 40.98	Conc. 193 PPM

Component	Propane		
Analysis Date:	10/26/2012		
Z 0.0110	S 49.01	C 50.7800	Conc. 51 PPM
S 49.0400	C 50.8	Z 0.004	Conc. 51 PPM
C 50.8	Z 0.0060	S 49.03	Conc. 51 PPM

Z= Zero Gas S= Span Gas C= Candidate Gas

Fred Holt, CHMM
Quality Control

Red Ball Technical Gas Service
PGVP Vendor ID # G12012
Information and Ordering
800-551-8150
Fax (318-425-6309)

Assay Laboratory: Red Ball TGS
555 Craig Kennedy Way
Shreveport, LA 71107
800-551-8150

EPA PROTOCOL GAS CERTIFICATE OF ANALYSIS

Cylinder Number:	EB0046618	**Certification Date**:	07/29/2013
Product ID Number:	124752	**Expiration Date:**	07/27/2021
Cylinder Pressure:	1900 PSIG	**MFG Facility:**	RBTGS-Shreveport-LA
COA #	ML130726.170231.3-0	**Lot Number:**	ML130726.170231.3
Customer PO. NO.:		**Tracking Number:**	065271430
Customer:		**Previous Certification Dates:**	

This calibration standard has been certified per the May 2012 EPA Traceability Protocol, Document EPA-600/R-12/531, using procedure G1.

Do Not Use This Cylinder Below 100 psig (0.7 Megapascal).

Certified Concentration(s)

Component	Concentration	Uncertainty	Analytical Principle
Carbon Dioxide	**13.9 %**	±0.11 %	NDIR
Oxygen	**10.99 %**	±0.07 %	MPA
Nitrogen	Balance		

Analyitcal Measurement Data Available Online.

Reference Standard(s)

Lot	Expiration	Type	Balance	Component	Concentration	Uncertainty(%)	NIST Reference
GC1106080848	09/07/2013	GMIS	N2	CO2	12.57 %	0.384	3221755
GC0807251121	04/28/2019	GMIS	N2	O2	24.43 %	0.52	71001

Analytical Instrumentation

Component	Analytical Principle	Make	Model	Serial	MPC Date
CO2	NDIR	Horiba	VA-3013	H0000P11	07/10/2013
O2	MPA	Horiba	VA-3013	H0000P11	07/11/2013

Z= Zero Gas S= Span Gas C= Candidate Gas

Red Ball Technical Gas Service
PGVP Vendor ID # G12013
Information and Ordering
800-551-8150
Fax (318-425-6309)

Fred Holt

Fred Holt, CHMM
Quality Control

Assay Laboratory: Red Ball TGS
555 Craig Kennedy Way
Shreveport, LA 71107
800-551-8150

EPA PROTOCOL GAS CERTIFICATE OF ANALYSIS

Cylinder Number:	EB0039038	**Certification Date**:	08/02/2013
Product ID Number:	124753	**Expiration Date:**	07/31/2021
Cylinder Pressure:	1900 PSIG	**MFG Facility:**	RBTGS-Shreveport-LA
COA #	ML130726.170120.1-0	**Lot Number:**	ML130726.170120.1
Customer PO. NO.:		**Tracking Number:**	065155673
Customer:		**Previous Certification Dates:**	

This calibration standard has been certified per the May 2012 EPA Traceability Protocol, Document EPA-600/R-12/531, using procedure G1.

Do Not Use This Cylinder Below 100 psig (0.7 Megapascal).

Certified Concentration(s)

Component	Concentration	Uncertainty	Analytical Principle
Carbon Dioxide	**6.99 %**	±0.03 %	NDIR
Oxygen	**20.92 %**	±0.08 %	MPA
Nitrogen	Balance		

Analyitcal Measurement Data Available Online.

Reference Standard(s)

Lot	Expiration	Type	Balance	Component	Concentration	Uncertainty(%)	NIST Reference
GC1106080848	09/07/2013	GMIS	N2	CO2	12.57 %	0.384	3221755
GC0807251121	04/28/2019	GMIS	N2	O2	24.43 %	0.52	71001

Analytical Instrumentation

Component	Analytical Principle	Make	Model	Serial	MPC Date
CO2	NDIR	Horiba	VA-3013	H0000P11	07/31/2013
O2	MPA	Horiba	VA-3013	H0000P11	07/11/2013

Z= Zero Gas S= Span Gas C= Candidate Gas

Red Ball Technical Gas Service
PGVP Vendor ID # G12013
Information and Ordering
800-551-8150
Fax (318-425-6309)

Fred Holt

Fred Holt, CHMM
Quality Control

MATHESON
ask. . .The Gas Professionals™

1700 Scepter Rd
Waverly, TN 37185
931-296-3357

Certificate of Analysis - EPA Protocol Mixtures

Customer: NORDON

		Protocol:	Reference #:	Lot#:
Cylinder Number:	SX49930	G1	T176792-1	9302603567
Cylinder Pressure:	1900psig			
Last Analysis Date:	11/19/2012			
Expiration Date:	11/19/2014			

DO NOT USE THIS CYLINDER WHEN THE PRESSURE FALLS BELOW 150 PSIG

		REPLICATE RESPONSES			
		Date:	11/2/2012	Date:	11/19/2012
Component:	Nitrogen Dioxide		45.60		45.20
			45.60		45.26
Certified Conc:	45.38ppm +/- 1% REL		45.40		45.25

BALANCE GAS: Air

REFERENCE STANDARDS:

Component:	Nitrogen Dioxide
Reference Standard:	SRM
Cylinder #:	CAL016152
Concentration:	98.0ppm
Exp Date:	12/31/2015
Lot #:	2660-C-57

CERTIFICATION INSTRUMENTS

Component:	Nitrogen Dioxide
Make/Model:	HORIBA CLA-510SS
Serial Number:	8H4SOCTJ
Measurement Principle:	CHEMI
Last Calibration:	11/2/2012

Notes:

This Certification was performed according to EPA Traceability Protocol for Assay & Certification of Gaseous Calibration Standards September 1997, using procedure G1 and/or G2.

U.S. EPA Vendor ID No.: D52012: PGVP Participation Date: 1/1/2012: PGVP Renewal Date: 12/31/12

Analyst: Julie Higgins Date: 11/26/2012

Julie Higgins

NOx Converter Efficiency and Response Times

Date: January 3, 2014

METHOD 7E NOx CONVERTER EFFICIENCY TEST

Certified NO_2 Conc. (ppmv)	45.38
Measured NOx Conc. (ppmv)	41.83
Converter Efficiency (%)	**92**

Criteria: Converter Efficiency should be 90% or greater

METHOD 7E RESPONSE TIMES

	NOx (ppmv)	**CO (ppmv)**	**O_2 (%)**
Low-Level Gas Concentration	0	0	0
Upscale Gas Concentration	94.70	193.00	10.99
95% of Upscale Gas	90.0	183.4	10.4

	NOx	**CO**	**O_2**
Low-Level Gas RT (sec)	88	75	50
Upscale Gas RT (sec)	82	73	37
Longer Analyzer RT Interval (sec)	88	75	50
System Response Time (sec)	88		
*System Response Time (min)	1.5		
†System Purge Time (min)	**2.9**		

*Longer interval of time to reach 95% of stable stable response for low & upscale level gases.

Criteria: †System Purge Time shall be ≥ 2 times the System Response Time

Analyzer Gas Quality Assurance

Test Run:	DH-010314.01		
Parameter	**NOx**	**CO**	**O2**
CALIBRATION ERROR DATA			
Range/Span Data			
Analyzer Range	100	200	25
Method 7E Span	94.7	193.0	20.9
Certified Calibration Gas Data			
Zero Level Certified Value (ppm or %)	0	0	0
Low Level Certified Value (ppm or %)	0.0	0.0	0.0
Mid Level Certified Value (ppm or %)	47.3	95.3	10.99
High Level Certified Value (ppm or %)	94.7	193.0	20.92
Calibration Error Observations (Direct)			
Zero Level Observed (ppm or %)	n/a	n/a	n/a
Low Level Observed (ppm or %)	0.2	0.0	0.0
Mid Level Observed (ppm or %)	47.6	95.7	11.0
High Level Observed (ppm or %)	95.2	193.2	21.0
Calibration Error Results			
Difference from Zero Level (%)	n/a	n/a	n/a
Difference from Low Level (%)	0.18	0.01	0.22
Difference from Mid Level (%)	0.32	0.22	0.15
Difference from High Level (%)	0.53	0.11	0.37
Allowable Difference (%)	(±2%)	(±2%)	(±2%)
TEST RUN DATA			
Bias Observations			
Low/Zero Level Cal. Gas Certified Value (ppm or %)	0.00	0.00	0.00
Upscale Cal. Gas Certified Value (ppm or %)	94.70	193.00	10.99
Initial Low/Zero Level Observed (ppm or %)	0.17	-0.02	0.05
Initial Upscale Level Observed (ppm or %)	95.20	193.21	11.02
Initial Bias Low/Zero Level Gas (ppm or %)	2.74	-0.71	0.05
Initial Bias Upscale Level Gas (ppm or %)	92.63	192.18	10.98
Final Bias Low/Zero Level Gas (ppm or %)	2.72	-1.00	0.16
Final Bias Upscale Level Gas (ppm or %)	91.44	191.53	10.99
Bias and Drift Results			
Initial Bias Low/Zero Level (%)	2.71	-0.35	0.03
Initial Bias Upscale Level (%)	-2.72	-0.53	-0.18
Final Bias Low/Zero Level (%)	2.69	-0.50	0.55
Final Bias Upscale Level (%)	-3.97	-0.87	-0.16
Allowable Bias (%)	(±5%)	(±5%)	(±5%)
Low/Zero Level Drift Calculation (%)	0.03	0.15	0.51
Upscale Level Drift Calculation (%)	1.26	0.34	0.02
Allowable Drift (%)	(±3%)	(±3%)	(±3%)
Raw Results (ppmv or %)	72.48	14.33	16.81
Minimum Detection Limit (MDL)	0.5	1.0	0.1
Corrected Results (ppmv or %)	74.0	15.2	16.9
***Final Results (ppmv or %)**	**74.0**	**15.2**	**16.9**

**Final Results which are shown in Italics represent the MDL for that analyte*

Analyzer Gas Quality Assurance

Test Run:	DH-010314.02		
Parameter	**NOx**	**CO**	**O2**
CALIBRATION ERROR DATA			
Range/Span Data			
Analyzer Range	100	200	25
Method 7E Span	94.7	193.0	20.9
Certified Calibration Gas Data			
Zero Level Certified Value (ppm or %)	0	0	0
Low Level Certified Value (ppm or %)	0.0	0.0	0.0
Mid Level Certified Value (ppm or %)	47.3	95.3	10.99
High Level Certified Value (ppm or %)	94.7	193.0	20.92
Calibration Error Observations (Direct)			
Zero Level Observed (ppm or %)	0.0	0.0	0.0
Low Level Observed (ppm or %)	0.2	0.0	0.0
Mid Level Observed (ppm or %)	47.6	95.7	11.0
High Level Observed (ppm or %)	95.2	193.2	21.0
Calibration Error Results			
Difference from Zero Level (%)	n/a	n/a	n/a
Difference from Low Level (%)	0.18	0.01	0.22
Difference from Mid Level (%)	0.32	0.22	0.15
Difference from High Level (%)	0.53	0.11	0.37
Allowable Difference (%)	(±2%)	(±2%)	(±2%)
TEST RUN DATA			
Bias Observations			
Low/Zero Level Cal. Gas Certified Value (ppm or %)	0.00	0.00	0.00
Upscale Cal. Gas Certified Value (ppm or %)	94.70	193.00	10.99
Initial Low/Zero Level Observed (ppm or %)	0.17	-0.02	0.05
Initial Upscale Level Observed (ppm or %)	95.20	193.21	11.02
Initial Bias Low/Zero Level Gas (ppm or %)	2.72	-1.00	0.16
Initial Bias Upscale Level Gas (ppm or %)	91.44	191.53	10.99
Final Bias Low/Zero Level Gas (ppm or %)	1.70	-0.96	0.18
Final Bias Upscale Level Gas (ppm or %)	90.59	191.32	10.99
Bias and Drift Results			
Initial Bias Low/Zero Level (%)	2.69	-0.50	0.55
Initial Bias Upscale Level (%)	-3.97	-0.87	-0.16
Final Bias Low/Zero Level (%)	1.61	-0.48	0.64
Final Bias Upscale Level (%)	-4.86	-0.98	-0.13
Allowable Bias (%)	(±5%)	(±5%)	(±5%)
Low/Zero Level Drift Calculation (%)	1.07	0.02	0.09
Upscale Level Drift Calculation (%)	0.89	0.11	0.02
Allowable Drift (%)	(±3%)	(±3%)	(±3%)
Raw Results (ppmv or %)	71.69	13.03	16.82
Minimum Detection Limit (MDL)	0.5	1.0	0.1
Corrected Results (ppmv or %)	74.1	14.0	16.9
***Final Results (ppmv or %)**	**74.1**	**14.0**	**16.9**

**Final Results which are shown in Italics represent the MDL for that analyte*

Analyzer Gas Quality Assurance

Test Run:	DH-010314.03		
Parameter	**NOx**	**CO**	**O2**
CALIBRATION ERROR DATA			
Range/Span Data			
Analyzer Range	100	200	25
Method 7E Span	94.7	193.0	20.9
Certified Calibration Gas Data			
Zero Level Certified Value (ppm or %)	0	0	0
Low Level Certified Value (ppm or %)	0.0	0.0	0.0
Mid Level Certified Value (ppm or %)	47.3	95.3	10.99
High Level Certified Value (ppm or %)	94.7	193.0	20.92
Calibration Error Observations (Direct)			
Zero Level Observed (ppm or %)	0.0	0.0	0.0
Low Level Observed (ppm or %)	0.2	0.0	0.0
Mid Level Observed (ppm or %)	47.6	95.7	11.0
High Level Observed (ppm or %)	95.2	193.2	21.0
Calibration Error Results			
Difference from Zero Level (%)	n/a	n/a	n/a
Difference from Low Level (%)	0.18	0.01	0.22
Difference from Mid Level (%)	0.32	0.22	0.15
Difference from High Level (%)	0.53	0.11	0.37
Allowable Difference (%)	(±2%)	(±2%)	(±2%)
TEST RUN DATA			
Bias Observations			
Low/Zero Level Cal. Gas Certified Value (ppm or %)	0.00	0.00	0.00
Upscale Cal. Gas Certified Value (ppm or %)	94.70	193.00	10.99
Initial Low/Zero Level Observed (ppm or %)	0.17	-0.02	0.05
Initial Upscale Level Observed (ppm or %)	95.20	193.21	11.02
Initial Bias Low/Zero Level Gas (ppm or %)	1.70	-0.96	0.18
Initial Bias Upscale Level Gas (ppm or %)	90.59	191.32	10.99
Final Bias Low/Zero Level Gas (ppm or %)	0.19	-4.17	0.01
Final Bias Upscale Level Gas (ppm or %)	91.34	189.89	10.91
Bias and Drift Results			
Initial Bias Low/Zero Level (%)	1.61	-0.48	0.64
Initial Bias Upscale Level (%)	-4.86	-0.98	-0.13
Final Bias Low/Zero Level (%)	0.02	-2.15	-0.16
Final Bias Upscale Level (%)	-4.08	-1.72	-0.55
Allowable Bias (%)	(±5%)	(±5%)	(±5%)
Low/Zero Level Drift Calculation (%)	1.59	1.66	0.80
Upscale Level Drift Calculation (%)	0.78	0.74	0.42
Allowable Drift (%)	(±3%)	(±3%)	(±3%)
Raw Results (ppmv or %)	72.28	11.15	16.86
Minimum Detection Limit (MDL)	0.5	1.0	0.1
Corrected Results (ppmv or %)	75.0	13.7	17.0
***Final Results (ppmv or %)**	**75.0**	**13.7**	**17.0**

**Final Results which are shown in Italics represent the MDL for that analyte*

Company	Plant Name	Unit Make	Unit Model	Unit Number	Status	Date	Time	NOx (ppmvd)	CO (ppmvd)	O2 (%, dry)
Enterprise Products	South Carlsbad CS	Solar	Centaur	Calibration Error	0NOx/0CO/0O2	1/3/14	7:41	0.17	-0.02	0.05
Enterprise Products	South Carlsbad CS	Solar	Centaur			1/3/14	7:42	10.35	0.12	13.77
Enterprise Products	South Carlsbad CS	Solar	Centaur			1/3/14	7:43	60.42	0.01	20.54
Enterprise Products	South Carlsbad CS	Solar	Centaur			1/3/14	7:44	95.27	-0.04	20.97
Enterprise Products	South Carlsbad CS	Solar	Centaur			1/3/14	7:45	95.85	-0.03	20.98
Enterprise Products	South Carlsbad CS	Solar	Centaur	Calibration Error	94.7NOx20.92O2	1/3/14	7:46	95.20	-0.05	21.00
Enterprise Products	South Carlsbad CS	Solar	Centaur			1/3/14	7:47	55.30	-0.06	11.02
Enterprise Products	South Carlsbad CS	Solar	Centaur	Calibration Error	47.3NOx10.99O2	1/3/14	7:48	47.60	-0.20	11.02
Enterprise Products	South Carlsbad CS	Solar	Centaur			1/3/14	7:49	44.34	14.90	0.22
Enterprise Products	South Carlsbad CS	Solar	Centaur			1/3/14	7:50	24.23	54.47	0.03
Enterprise Products	South Carlsbad CS	Solar	Centaur	Calibration Error	193CO	1/3/14	7:51	24.25	193.21	0.03
Enterprise Products	South Carlsbad CS	Solar	Centaur			1/3/14	7:52	10.00	134.83	0.03
Enterprise Products	South Carlsbad CS	Solar	Centaur			1/3/14	7:53	0.57	95.44	0.03
Enterprise Products	South Carlsbad CS	Solar	Centaur	Calibration Error	95.3CO	1/3/14	7:54	0.51	95.73	0.02
Enterprise Products	South Carlsbad CS	Solar	Centaur			1/3/14	7:55	0.45	81.22	0.05
Enterprise Products	South Carlsbad CS	Solar	Centaur			1/3/14	7:56	2.69	47.66	0.04
Enterprise Products	South Carlsbad CS	Solar	Centaur			1/3/14	7:57	3.30	47.74	0.03
Enterprise Products	South Carlsbad CS	Solar	Centaur			1/3/14	7:58	38.19	47.68	0.05
Enterprise Products	South Carlsbad CS	Solar	Centaur			1/3/14	7:59	41.29	1.88	0.01
Enterprise Products	South Carlsbad CS	Solar	Centaur	CE Test	NO2	1/3/14	8:00	42.18	0.10	0.02
Enterprise Products	South Carlsbad CS	Solar	Centaur			1/3/14	8:01	43.07	0.52	0.03
Enterprise Products	South Carlsbad CS	Solar	Centaur			1/3/14	8:02	43.06	0.48	0.02
Enterprise Products	South Carlsbad CS	Solar	Centaur			1/3/14	8:03	15.10	0.18	0.03
Enterprise Products	South Carlsbad CS	Solar	Centaur			1/3/14	8:04	0.68	0.41	0.03
Enterprise Products	South Carlsbad CS	Solar	Centaur			1/3/14	8:05	0.57	0.16	-0.01
Enterprise Products	South Carlsbad CS	Solar	Centaur			1/3/14	8:06	0.47	0.25	0.02
Enterprise Products	South Carlsbad CS	Solar	Centaur			1/3/14	8:07	0.45	0.06	0.00
Enterprise Products	South Carlsbad CS	Solar	Centaur			1/3/14	8:08	0.45	0.03	0.01
Enterprise Products	South Carlsbad CS	Solar	Centaur			1/3/14	8:09	0.52	0.36	0.01
Enterprise Products	South Carlsbad CS	Solar	Centaur			1/3/14	8:10	0.61	0.36	0.02
Enterprise Products	South Carlsbad CS	Solar	Centaur			1/3/14	8:11	0.85	0.13	0.03
Enterprise Products	South Carlsbad CS	Solar	Centaur			1/3/14	8:12	0.87	-0.14	0.06
Enterprise Products	South Carlsbad CS	Solar	Centaur			1/3/14	8:13	1.38	0.34	0.10
Enterprise Products	South Carlsbad CS	Solar	Centaur			1/3/14	8:14	1.43	0.30	0.14
Enterprise Products	South Carlsbad CS	Solar	Centaur			1/3/14	8:15	1.36	0.51	0.19
Enterprise Products	South Carlsbad CS	Solar	Centaur			1/3/14	8:16	-3.41	-4.24	0.04
Enterprise Products	South Carlsbad CS	Solar	Centaur			1/3/14	8:17	-4.31	-4.96	0.07
Enterprise Products	South Carlsbad CS	Solar	Centaur			1/3/14	8:18	1.10	0.42	0.44
Enterprise Products	South Carlsbad CS	Solar	Centaur			1/3/14	8:19	1.40	0.88	0.57
Enterprise Products	South Carlsbad CS	Solar	Centaur			1/3/14	8:20	1.18	0.76	0.65
Enterprise Products	South Carlsbad CS	Solar	Centaur			1/3/14	8:21	1.45	1.13	0.77
Enterprise Products	South Carlsbad CS	Solar	Centaur			1/3/14	8:22	1.22	0.75	0.89
Enterprise Products	South Carlsbad CS	Solar	Centaur			1/3/14	8:23	0.80	0.43	0.98
Enterprise Products	South Carlsbad CS	Solar	Centaur			1/3/14	8:24	1.27	4.47	6.67
Enterprise Products	South Carlsbad CS	Solar	Centaur			1/3/14	8:25	1.74	25.73	8.18
Enterprise Products	South Carlsbad CS	Solar	Centaur			1/3/14	8:26	1.75	26.08	8.33
Enterprise Products	South Carlsbad CS	Solar	Centaur			1/3/14	8:27	1.67	26.02	8.33
Enterprise Products	South Carlsbad CS	Solar	Centaur			1/3/14	8:28	1.68	25.67	8.38
Enterprise Products	South Carlsbad CS	Solar	Centaur			1/3/14	8:29	0.80	24.64	8.38
Enterprise Products	South Carlsbad CS	Solar	Centaur			1/3/14	8:30	1.79	25.60	8.49
Enterprise Products	South Carlsbad CS	Solar	Centaur			1/3/14	8:31	1.46	25.27	8.57
Enterprise Products	South Carlsbad CS	Solar	Centaur			1/3/14	8:32	1.48	25.16	8.61
Enterprise Products	South Carlsbad CS	Solar	Centaur			1/3/14	8:33	1.49	25.21	8.68
Enterprise Products	South Carlsbad CS	Solar	Centaur			1/3/14	8:34	1.37	24.91	8.71
Enterprise Products	South Carlsbad CS	Solar	Centaur			1/3/14	8:35	1.44	24.83	8.79
Enterprise Products	South Carlsbad CS	Solar	Centaur			1/3/14	8:36	1.47	24.80	8.83
Enterprise Products	South Carlsbad CS	Solar	Centaur			1/3/14	8:37	1.49	24.50	8.92
Enterprise Products	South Carlsbad CS	Solar	Centaur			1/3/14	8:38	1.53	24.59	8.98
Enterprise Products	South Carlsbad CS	Solar	Centaur			1/3/14	8:39	1.67	24.53	9.03
Enterprise Products	South Carlsbad CS	Solar	Centaur			1/3/14	8:40	1.29	23.95	9.11
Enterprise Products	South Carlsbad CS	Solar	Centaur			1/3/14	8:41	1.50	24.19	9.19
Enterprise Products	South Carlsbad CS	Solar	Centaur			1/3/14	8:42	1.67	24.38	9.30
Enterprise Products	South Carlsbad CS	Solar	Centaur			1/3/14	8:43	1.68	24.09	9.40
Enterprise Products	South Carlsbad CS	Solar	Centaur			1/3/14	8:44	1.73	24.08	9.47
Enterprise Products	South Carlsbad CS	Solar	Centaur			1/3/14	8:45	1.79	24.04	9.52
Enterprise Products	South Carlsbad CS	Solar	Centaur			1/3/14	8:46	1.71	23.62	9.64
Enterprise Products	South Carlsbad CS	Solar	Centaur			1/3/14	8:47	1.76	23.54	9.74

Enterprise Products	South Carlsbad CS	Solar	Centaur			1/3/14	8:48	1.78	23.47	9.86
Enterprise Products	South Carlsbad CS	Solar	Centaur			1/3/14	8:49	1.81	23.06	9.93
Enterprise Products	South Carlsbad CS	Solar	Centaur			1/3/14	8:50	1.64	22.77	10.00
Enterprise Products	South Carlsbad CS	Solar	Centaur			1/3/14	8:51	1.69	22.79	10.10
Enterprise Products	South Carlsbad CS	Solar	Centaur			1/3/14	8:52	1.69	22.63	10.14
Enterprise Products	South Carlsbad CS	Solar	Centaur			1/3/14	8:53	1.68	22.36	10.22
Enterprise Products	South Carlsbad CS	Solar	Centaur			1/3/14	8:54	1.58	22.43	10.28
Enterprise Products	South Carlsbad CS	Solar	Centaur			1/3/14	8:55	1.43	21.99	10.37
Enterprise Products	South Carlsbad CS	Solar	Centaur			1/3/14	8:56	1.77	21.78	9.54
Enterprise Products	South Carlsbad CS	Solar	Centaur			1/3/14	8:57	1.14	1.82	0.04
Enterprise Products	South Carlsbad CS	Solar	Centaur			1/3/14	8:58	0.90	1.12	0.02
Enterprise Products	South Carlsbad CS	Solar	Centaur			1/3/14	8:59	1.47	0.02	10.73
Enterprise Products	South Carlsbad CS	Solar	Centaur			1/3/14	9:00	1.61	-0.52	10.94
Enterprise Products	South Carlsbad CS	Solar	Centaur			1/3/14	9:01	14.47	47.84	0.10
Enterprise Products	South Carlsbad CS	Solar	Centaur			1/3/14	9:02	46.49	95.85	0.02
Enterprise Products	South Carlsbad CS	Solar	Centaur			1/3/14	9:03	39.52	53.59	20.65
Enterprise Products	South Carlsbad CS	Solar	Centaur			1/3/14	9:04	2.02	2.08	20.90
Enterprise Products	South Carlsbad CS	Solar	Centaur			1/3/14	9:05	1.96	1.82	20.92
Enterprise Products	South Carlsbad CS	Solar	Centaur			1/3/14	9:06	2.35	1.77	20.93
Enterprise Products	South Carlsbad CS	Solar	Centaur			1/3/14	9:07	1.55	1.98	20.91
Enterprise Products	South Carlsbad CS	Solar	Centaur			1/3/14	9:08	45.63	188.72	16.54
Enterprise Products	South Carlsbad CS	Solar	Centaur			1/3/14	9:17	4.15	-0.08	11.00
Enterprise Products	South Carlsbad CS	Solar	Centaur	Bias Check	0NOx/0CO/10.99O2	1/3/14	9:18	2.74	-0.71	10.98
Enterprise Products	South Carlsbad CS	Solar	Centaur			1/3/14	9:19	6.49	20.56	4.10
Enterprise Products	South Carlsbad CS	Solar	Centaur	Bias Check	94.7NOx/193CO/0O2	1/3/14	9:20	92.63	192.18	0.05
Enterprise Products	South Carlsbad CS	Solar	Centaur			1/3/14	9:21	86.04	152.17	13.07
Enterprise Products	South Carlsbad CS	Solar	Centaur			1/3/14	9:22	68.42	17.67	16.30
Enterprise Products	South Carlsbad CS	Solar	Centaur	T1, P1	DH-010314.01	1/3/14	9:23	73.69	21.48	16.68
Enterprise Products	South Carlsbad CS	Solar	Centaur	T1, P1	DH-010314.01	1/3/14	9:24	74.87	21.03	16.76
Enterprise Products	South Carlsbad CS	Solar	Centaur	T1, P1	DH-010314.01	1/3/14	9:25	74.57	20.79	16.76
Enterprise Products	South Carlsbad CS	Solar	Centaur	T1, P1	DH-010314.01	1/3/14	9:26	74.35	20.08	16.79
Enterprise Products	South Carlsbad CS	Solar	Centaur	T1, P2	DH-010314.01	1/3/14	9:27	73.61	16.91	16.79
Enterprise Products	South Carlsbad CS	Solar	Centaur	T1, P2	DH-010314.01	1/3/14	9:28	71.53	12.47	16.80
Enterprise Products	South Carlsbad CS	Solar	Centaur	T1, P2	DH-010314.01	1/3/14	9:29	71.55	12.53	16.78
Enterprise Products	South Carlsbad CS	Solar	Centaur	T1, P3	DH-010314.01	1/3/14	9:30	71.67	11.92	16.83
Enterprise Products	South Carlsbad CS	Solar	Centaur	T1, P3	DH-010314.01	1/3/14	9:31	70.63	11.73	16.80
Enterprise Products	South Carlsbad CS	Solar	Centaur	T1, P3	DH-010314.01	1/3/14	9:32	69.26	11.35	16.81
Enterprise Products	South Carlsbad CS	Solar	Centaur	T1, P4	DH-010314.01	1/3/14	9:33	70.91	11.30	16.78
Enterprise Products	South Carlsbad CS	Solar	Centaur	T1, P4	DH-010314.01	1/3/14	9:34	72.54	12.14	16.81
Enterprise Products	South Carlsbad CS	Solar	Centaur	T1, P4	DH-010314.01	1/3/14	9:35	72.63	12.57	16.84
Enterprise Products	South Carlsbad CS	Solar	Centaur	T1, P5	DH-010314.01	1/3/14	9:36	72.20	12.62	16.84
Enterprise Products	South Carlsbad CS	Solar	Centaur	T1, P5	DH-010314.01	1/3/14	9:37	72.14	12.24	16.84
Enterprise Products	South Carlsbad CS	Solar	Centaur	T1, P5	DH-010314.01	1/3/14	9:38	72.31	12.53	16.83
Enterprise Products	South Carlsbad CS	Solar	Centaur	T1, P6	DH-010314.01	1/3/14	9:39	72.42	12.16	16.82
Enterprise Products	South Carlsbad CS	Solar	Centaur	T1, P6	DH-010314.01	1/3/14	9:40	74.48	14.44	16.81
Enterprise Products	South Carlsbad CS	Solar	Centaur	T1, P6	DH-010314.01	1/3/14	9:41	73.29	15.86	16.79
Enterprise Products	South Carlsbad CS	Solar	Centaur	T1, P6	DH-010314.01	1/3/14	9:42	73.43	16.39	16.82
Enterprise Products	South Carlsbad CS	Solar	Centaur			1/3/14	9:43	70.14	12.09	18.89
Enterprise Products	South Carlsbad CS	Solar	Centaur			1/3/14	9:44	71.29	19.84	16.82
Enterprise Products	South Carlsbad CS	Solar	Centaur			1/3/14	9:45	72.99	29.72	16.82
Enterprise Products	South Carlsbad CS	Solar	Centaur	T1, P7	DH-010314.01	1/3/14	9:46	71.34	25.55	16.80
Enterprise Products	South Carlsbad CS	Solar	Centaur	T1, P7	DH-010314.01	1/3/14	9:47	72.35	21.74	16.81
Enterprise Products	South Carlsbad CS	Solar	Centaur	T1, P7	DH-010314.01	1/3/14	9:48	72.91	18.04	16.86
Enterprise Products	South Carlsbad CS	Solar	Centaur	T1, P8	DH-010314.01	1/3/14	9:49	72.82	14.70	16.82
Enterprise Products	South Carlsbad CS	Solar	Centaur	T1, P8	DH-010314.01	1/3/14	9:50	72.16	12.22	16.83
Enterprise Products	South Carlsbad CS	Solar	Centaur	T1, P8	DH-010314.01	1/3/14	9:51	72.84	12.04	16.83
Enterprise Products	South Carlsbad CS	Solar	Centaur	T1, P9	DH-010314.01	1/3/14	9:52	72.70	12.01	16.84
Enterprise Products	South Carlsbad CS	Solar	Centaur	T1, P9	DH-010314.01	1/3/14	9:53	72.17	11.98	16.81
Enterprise Products	South Carlsbad CS	Solar	Centaur	T1, P9	DH-010314.01	1/3/14	9:54	71.87	11.92	16.82
Enterprise Products	South Carlsbad CS	Solar	Centaur	T1, P10	DH-010314.01	1/3/14	9:55	72.13	11.81	16.83
Enterprise Products	South Carlsbad CS	Solar	Centaur	T1, P10	DH-010314.01	1/3/14	9:56	72.34	11.67	16.82
Enterprise Products	South Carlsbad CS	Solar	Centaur	T1, P10	DH-010314.01	1/3/14	9:57	69.00	8.15	16.60
Enterprise Products	South Carlsbad CS	Solar	Centaur	T1, P11	DH-010314.01	1/3/14	9:58	70.88	9.84	16.74
Enterprise Products	South Carlsbad CS	Solar	Centaur	T1, P11	DH-010314.01	1/3/14	9:59	73.33	11.94	16.83
Enterprise Products	South Carlsbad CS	Solar	Centaur	T1, P11	DH-010314.01	1/3/14	10:00	73.24	11.96	16.85
Enterprise Products	South Carlsbad CS	Solar	Centaur	T1, P12	DH-010314.01	1/3/14	10:01	73.18	13.23	16.94
Enterprise Products	South Carlsbad CS	Solar	Centaur	T1, P12	DH-010314.01	1/3/14	10:02	71.83	13.05	16.71
Enterprise Products	South Carlsbad CS	Solar	Centaur	T1, P12	DH-010314.01	1/3/14	10:03	74.03	16.96	16.85
Enterprise Products	South Carlsbad CS	Solar	Centaur	T1, P12	DH-010314.01	1/3/14	10:04	73.42	17.59	16.85
					DH-010314.01 Averages			**72.48**	**14.33**	**16.81**

Enterprise Products	South Carlsbad CS	Solar	Centaur			1/3/14	10:05	70.42	22.30	10.94
Enterprise Products	South Carlsbad CS	Solar	Centaur	Bias Check	0NOx/0CO/10.99O2	1/3/14	10:06	2.72	-1.00	10.99
Enterprise Products	South Carlsbad CS	Solar	Centaur			1/3/14	10:07	-1.86	4.38	5.33
Enterprise Products	South Carlsbad CS	Solar	Centaur			1/3/14	10:08	85.09	183.30	-0.21
Enterprise Products	South Carlsbad CS	Solar	Centaur	Bias Check	94.7NOx/193CO/0O2	1/3/14	10:09	91.44	191.53	0.16
Enterprise Products	South Carlsbad CS	Solar	Centaur			1/3/14	10:10	79.65	166.97	5.05
Enterprise Products	South Carlsbad CS	Solar	Centaur			1/3/14	10:11	67.55	11.61	16.38
Enterprise Products	South Carlsbad CS	Solar	Centaur	T1	DH-010314.02	1/3/14	10:12	71.03	13.91	16.79
Enterprise Products	South Carlsbad CS	Solar	Centaur	T1	DH-010314.02	1/3/14	10:13	71.20	14.14	16.82
Enterprise Products	South Carlsbad CS	Solar	Centaur	T1	DH-010314.02	1/3/14	10:14	71.43	13.10	16.77
Enterprise Products	South Carlsbad CS	Solar	Centaur	T1	DH-010314.02	1/3/14	10:15	72.15	13.91	16.83
Enterprise Products	South Carlsbad CS	Solar	Centaur	T1	DH-010314.02	1/3/14	10:16	72.15	14.32	16.85
Enterprise Products	South Carlsbad CS	Solar	Centaur	T1	DH-010314.02	1/3/14	10:17	71.94	14.28	16.84
Enterprise Products	South Carlsbad CS	Solar	Centaur	T1	DH-010314.02	1/3/14	10:18	69.80	13.20	16.81
Enterprise Products	South Carlsbad CS	Solar	Centaur	T1	DH-010314.02	1/3/14	10:19	71.20	13.06	16.81
Enterprise Products	South Carlsbad CS	Solar	Centaur	T1	DH-010314.02	1/3/14	10:20	71.94	13.80	16.83
Enterprise Products	South Carlsbad CS	Solar	Centaur	T1	DH-010314.02	1/3/14	10:21	71.94	13.74	16.86
Enterprise Products	South Carlsbad CS	Solar	Centaur	T1	DH-010314.02	1/3/14	10:22	71.72	13.54	16.81
Enterprise Products	South Carlsbad CS	Solar	Centaur	T1	DH-010314.02	1/3/14	10:23	72.01	13.53	16.83
Enterprise Products	South Carlsbad CS	Solar	Centaur	T1	DH-010314.02	1/3/14	10:24	71.91	13.39	16.84
Enterprise Products	South Carlsbad CS	Solar	Centaur	T1	DH-010314.02	1/3/14	10:25	71.93	13.34	16.83
Enterprise Products	South Carlsbad CS	Solar	Centaur	T1	DH-010314.02	1/3/14	10:26	71.83	13.35	16.83
Enterprise Products	South Carlsbad CS	Solar	Centaur	T1	DH-010314.02	1/3/14	10:27	71.77	13.25	16.83
Enterprise Products	South Carlsbad CS	Solar	Centaur	T1	DH-010314.02	1/3/14	10:28	71.70	13.03	16.82
Enterprise Products	South Carlsbad CS	Solar	Centaur	T1	DH-010314.02	1/3/14	10:29	71.96	13.13	16.82
Enterprise Products	South Carlsbad CS	Solar	Centaur	T1	DH-010314.02	1/3/14	10:30	71.72	13.07	16.83
Enterprise Products	South Carlsbad CS	Solar	Centaur	T1	DH-010314.02	1/3/14	10:31	70.62	12.93	16.82
Enterprise Products	South Carlsbad CS	Solar	Centaur	T1	DH-010314.02	1/3/14	10:32	69.81	10.57	16.71
Enterprise Products	South Carlsbad CS	Solar	Centaur	T1	DH-010314.02	1/3/14	10:33	72.48	12.90	16.83
Enterprise Products	South Carlsbad CS	Solar	Centaur	T1	DH-010314.02	1/3/14	10:34	72.42	12.60	16.84
Enterprise Products	South Carlsbad CS	Solar	Centaur	T1	DH-010314.02	1/3/14	10:35	72.19	12.46	16.83
Enterprise Products	South Carlsbad CS	Solar	Centaur	T1	DH-010314.02	1/3/14	10:36	72.21	12.67	16.86
Enterprise Products	South Carlsbad CS	Solar	Centaur	T1	DH-010314.02	1/3/14	10:37	72.18	12.38	16.85
Enterprise Products	South Carlsbad CS	Solar	Centaur	T1	DH-010314.02	1/3/14	10:38	72.19	12.43	16.83
Enterprise Products	South Carlsbad CS	Solar	Centaur	T1	DH-010314.02	1/3/14	10:39	72.17	12.52	16.84
Enterprise Products	South Carlsbad CS	Solar	Centaur	T1	DH-010314.02	1/3/14	10:40	72.27	12.26	16.86
Enterprise Products	South Carlsbad CS	Solar	Centaur	T1	DH-010314.02	1/3/14	10:41	71.75	11.87	16.83
Enterprise Products	South Carlsbad CS	Solar	Centaur	T1	DH-010314.02	1/3/14	10:42	70.91	11.17	16.77
					DH-010314.02 Averages			**71.69**	**13.03**	**16.82**
Enterprise Products	South Carlsbad CS	Solar	Centaur			1/3/14	10:43	36.04	10.05	10.66
Enterprise Products	South Carlsbad CS	Solar	Centaur	Bias Check	0NOx/0CO/10.99O2	1/3/14	10:44	1.70	-0.96	10.99
Enterprise Products	South Carlsbad CS	Solar	Centaur			1/3/14	10:45	31.08	84.95	-0.14
Enterprise Products	South Carlsbad CS	Solar	Centaur	Bias Check	94.7NOx/193CO/0O2	1/3/14	10:46	90.59	191.32	0.18
Enterprise Products	South Carlsbad CS	Solar	Centaur			1/3/14	10:47	90.76	124.36	16.57
Enterprise Products	South Carlsbad CS	Solar	Centaur			1/3/14	10:48	72.21	11.95	16.79
Enterprise Products	South Carlsbad CS	Solar	Centaur	T1	DH-010314.03	1/3/14	10:49	72.12	12.12	16.84
Enterprise Products	South Carlsbad CS	Solar	Centaur	T1	DH-010314.03	1/3/14	10:50	72.37	11.47	16.83
Enterprise Products	South Carlsbad CS	Solar	Centaur	T1	DH-010314.03	1/3/14	10:51	72.38	11.70	16.85
Enterprise Products	South Carlsbad CS	Solar	Centaur	T1	DH-010314.03	1/3/14	10:52	72.39	11.50	16.88
Enterprise Products	South Carlsbad CS	Solar	Centaur	T1	DH-010314.03	1/3/14	10:53	72.37	11.27	16.86
Enterprise Products	South Carlsbad CS	Solar	Centaur	T1	DH-010314.03	1/3/14	10:54	72.33	11.46	16.85
Enterprise Products	South Carlsbad CS	Solar	Centaur	T1	DH-010314.03	1/3/14	10:55	72.30	11.44	16.85
Enterprise Products	South Carlsbad CS	Solar	Centaur	T1	DH-010314.03	1/3/14	10:56	72.39	11.22	16.88
Enterprise Products	South Carlsbad CS	Solar	Centaur	T1	DH-010314.03	1/3/14	10:57	72.36	11.32	16.87
Enterprise Products	South Carlsbad CS	Solar	Centaur	T1	DH-010314.03	1/3/14	10:58	72.27	11.11	16.85
Enterprise Products	South Carlsbad CS	Solar	Centaur	T1	DH-010314.03	1/3/14	10:59	72.28	11.18	16.86
Enterprise Products	South Carlsbad CS	Solar	Centaur	T1	DH-010314.03	1/3/14	11:00	72.37	11.18	16.85
Enterprise Products	South Carlsbad CS	Solar	Centaur	T1	DH-010314.03	1/3/14	11:01	72.30	11.16	16.87
Enterprise Products	South Carlsbad CS	Solar	Centaur	T1	DH-010314.03	1/3/14	11:02	72.33	11.24	16.85
Enterprise Products	South Carlsbad CS	Solar	Centaur	T1	DH-010314.03	1/3/14	11:03	72.28	10.91	16.86
Enterprise Products	South Carlsbad CS	Solar	Centaur	T1	DH-010314.03	1/3/14	11:04	72.33	11.13	16.87
Enterprise Products	South Carlsbad CS	Solar	Centaur	T1	DH-010314.03	1/3/14	11:05	71.95	10.73	16.85
Enterprise Products	South Carlsbad CS	Solar	Centaur	T1	DH-010314.03	1/3/14	11:06	72.29	10.71	16.85
Enterprise Products	South Carlsbad CS	Solar	Centaur	T1	DH-010314.03	1/3/14	11:07	72.36	10.84	16.86
Enterprise Products	South Carlsbad CS	Solar	Centaur	T1	DH-010314.03	1/3/14	11:08	69.57	8.22	16.70
Enterprise Products	South Carlsbad CS	Solar	Centaur	T1	DH-010314.03	1/3/14	11:09	71.66	12.01	16.97
Enterprise Products	South Carlsbad CS	Solar	Centaur	T1	DH-010314.03	1/3/14	11:10	71.98	14.94	16.85
Enterprise Products	South Carlsbad CS	Solar	Centaur	T1	DH-010314.03	1/3/14	11:11	72.77	11.00	16.87
Enterprise Products	South Carlsbad CS	Solar	Centaur	T1	DH-010314.03	1/3/14	11:12	72.64	10.90	16.86
Enterprise Products	South Carlsbad CS	Solar	Centaur	T1	DH-010314.03	1/3/14	11:13	72.61	10.49	16.88

Enterprise Products	South Carlsbad CS	Solar	Centaur	T1	DH-010314.03	1/3/14	11:14	72.51	10.79	16.87
Enterprise Products	South Carlsbad CS	Solar	Centaur	T1	DH-010314.03	1/3/14	11:15	72.71	11.41	16.86
Enterprise Products	South Carlsbad CS	Solar	Centaur	T1	DH-010314.03	1/3/14	11:16	72.76	10.61	16.88
Enterprise Products	South Carlsbad CS	Solar	Centaur	T1	DH-010314.03	1/3/14	11:17	72.71	10.57	16.87
Enterprise Products	South Carlsbad CS	Solar	Centaur	T1	DH-010314.03	1/3/14	11:18	72.56	10.54	16.88
Enterprise Products	South Carlsbad CS	Solar	Centaur	T1	DH-010314.03	1/3/14	11:19	72.46	10.40	16.86
					DH-010314.03 Averages			**72.28**	**11.15**	**16.86**
Enterprise Products	South Carlsbad CS	Solar	Centaur			1/3/14	11:20	42.04	9.45	11.03
Enterprise Products	South Carlsbad CS	Solar	Centaur	Bias Check	0NOx/0CO/10.99O2	1/3/14	11:21	0.19	-4.17	10.91
Enterprise Products	South Carlsbad CS	Solar	Centaur			1/3/14	11:22	38.35	107.72	0.03
Enterprise Products	South Carlsbad CS	Solar	Centaur	Bias Check	94.7NOx/193CO/0O2	1/3/14	11:23	91.34	189.89	0.01
Enterprise Products	South Carlsbad CS	Solar	Centaur			1/3/14	11:24	79.14	101.49	16.20
Enterprise Products	South Carlsbad CS	Solar	Centaur			1/3/14	17:01	12.37	-4.16	0.08
Enterprise Products	South Carlsbad CS	Solar	Centaur			1/3/14	17:02	38.35	-4.79	0.07
Enterprise Products	South Carlsbad CS	Solar	Centaur	CE Test	NO2	1/3/14	17:03	41.83	-4.42	0.08
Enterprise Products	South Carlsbad CS	Solar	Centaur			1/3/14	17:04	30.41	-4.57	0.08

Annual Emission Test Report
for one
Solar Centaur T4702 Compressor Turbine
Unit Number T2
located at the
South Carlsbad Compressor Station

Prepared for
Enterprise Field Services, LLC
P. O. Box 4324
Houston, TX 77210

January 2014
Nordon Project No. 14-0152-2

This test report has been reviewed and approved for submittal to the New Mexico Environment Department (NMED) by the following representatives:

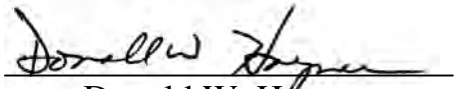

Donald W. Haynes
Nordon Corporation

Enterprise Field Services, LLC

NORDON *CORPORATION*

P. O. Box 1415 Round Rock, Texas 78680
Phone (512) 355-3786 Fax (512) 355-3785

SUMMARY OF RESULTS

Exhaust emission testing was performed on one Solar Centaur T4702 (Unit # T2) compressor turbine for Enterprise Field Services, LLC located at the South Carlsbad Compressor Station, near Loving, Eddy County, New Mexico. The turbine is used for natural gas compression. The testing was performed to demonstrate the continued compliance with the emission limits set forth in the NMED permit. Nordon Corporation of Round Rock, Texas, performed the exhaust emissions testing on January 4, 2014.

Continuous emission instruments housed in a mobile analysis unit were used to determine the concentrations of NO_X, CO, and O_2 in the exhaust stack of the compressor turbine. The following Code of Federal Regulations, Title 40, Part 60 (40CFR60), Appendix A reference methods were used to determine stack gas concentrations: Method 7E for nitrogen oxides (NO_X), Method 10 for carbon monoxide (CO), and Method 3A for oxygen (O_2). Mass emission rates were determined stoichiometrically according to Method 19 data reduction procedures using measured fuel flow rate.

Three thirty-minute test runs were performed on the exhaust of the turbine while firing on natural gas. The results of the testing are presented in a summary of results table. This table includes all the relevant information pertaining to the turbine/compressor operations, exhaust emissions, and ambient conditions. Exhaust concentrations are presented in part per million by volume (ppmv) or percent (%) by volume. The mass emission rates are presented in pound per hour (lb/hr) and ton per year (tpy). Turbine/compressor operational data was collected during each test run.

Summary of Results

NORDON CORPORATION

P.O. Box 1415 Round Rock, Texas 78680
PHONE (512) 355-3786 • FAX (512)355-3785

Plant: South Carlsbad Compressor Station
Facility Owner:Enterprise Field Services, LLC
Location: Loving, Eddy County, New Mexico
Unit Make/Model: Solar Centaur T4702
Unit Number: T2 , Ser. No.OHE12C7057
Test Personnel: DWH / KRJ

RUN NUMBER	DH-010414.01	DH-010414.02	DH-010414.03	
Date	1/4/14	1/4/14	1/4/14	
Start Time (hr)	8:20	9:10	9:47	
Stop Time (hr)	8:50	9:40	10:17	
TURBINE DATA				
Rated Horsepower (Hp)	3609	3609	3609	
Fuel Pressure (psig)	195	188	192	
Gas Producer Speed (%)	95	95	95	
Power Turbine Speed (%)	86	86	84	
Turbine Compressor Discharge Pressure (psig)	109	107	103	
Exhaust Temperature (°F)	1047	1060	1073	
Horsepower (Hp)	3630	3571	3452	
Heat Rate (MMBtu/hr)	42.9	38.4	39.9	
COMPRESSOR DATA				
Suction Pressure (psig)	330	330	338	
Suction Temperature (°F)	88	93	97	
Discharge Pressure (psig)	560	561	562	
Discharge Temperature (°F)	171	176	177	
Gas Production (MMscfd)	38	34	33	
FUEL & EXHAUST DATA				
O2 F-factor (dscf/MMBtu)	8698	8698	8698	
Fuel Heating Value (HHV Btu/scf)	1098	1098	1098	
Stoichiometric Exhaust Flow (dscfh)	1.97E+06	1.75E+06	1.82E+06	
AMBIENT CONDITIONS				
Temperature (°F): Dry bulb	42	49	64	
Temperature (°F): Wet bulb	36	41	47	
Atmospheric Pressure ("Hg)	26.64	26.64	26.64	
Humidity (lb water/lb air)	0.0036	0.0042	0.0037	
Humidity (% vol)	0.5	0.6	0.5	
MEASURED EXHAUST OUTLET CONCENTRATIONS				**AVERAGES**
NOx (ppmv)	78.7	80.4	84.1	**81.1**
CO (ppmv)	13.1	12.3	12.7	**12.7**
O2 (%)	16.9	16.9	16.9	**16.9**
EMISSION RATES				
NOx (lb/hr) LIMIT=27.0	18.54	16.85	18.27	**17.88**
CO (lb/hr) LIMIT=7.4	1.87	1.57	1.68	**1.71**
NOx (tpy, @8760 hr/yr) LIMIT=118.3	81.19	73.78	80.02	**78.33**
CO (tpy, @8760 hr/yr) LIMIT=32.5	8.20	6.89	7.35	**7.48**

PROCEDURES

Continuous emission instruments housed in the mobile analysis unit were used to determine the concentrations of pollutants found in the turbine exhaust stack. The following 40CFR60, Appendix A reference methods were used to determine stack gas concentrations: Method 7E for NO_X, Method 10 for CO, and Method 3A for O_2. Mass emission rates were determined according to data reduction procedures provided in Method 19.

As depicted in Figure 1, Sample System and Instrumentation, a stainless steel sample probe was located in the centroid of the stack. Sample gas enters the stainless steel probe into a stainless steel 3-way valve. The 3-way valve is used to perform leak checks and sample system bias checks. From the valve, the gas flows through a 3/8" Teflon® heat traced sample line to a stainless steel minimum contact condenser to dry the sample. From the condenser, a 3/8" Teflon sample line brings the exhaust gas to a manifold in the mobile analysis unit via a Teflon-lined diaphragm pump. The manifold partitions the gas through quick-connects so that each instrument can directly sample exhaust gas. Each instrument is equipped with a rotometer to maintain correct sample pressure and flow. The instruments are connected to a computer data acquisition system to document its response during quality assurance activities and testing.

Figure 1: Sample System and Instrumentation

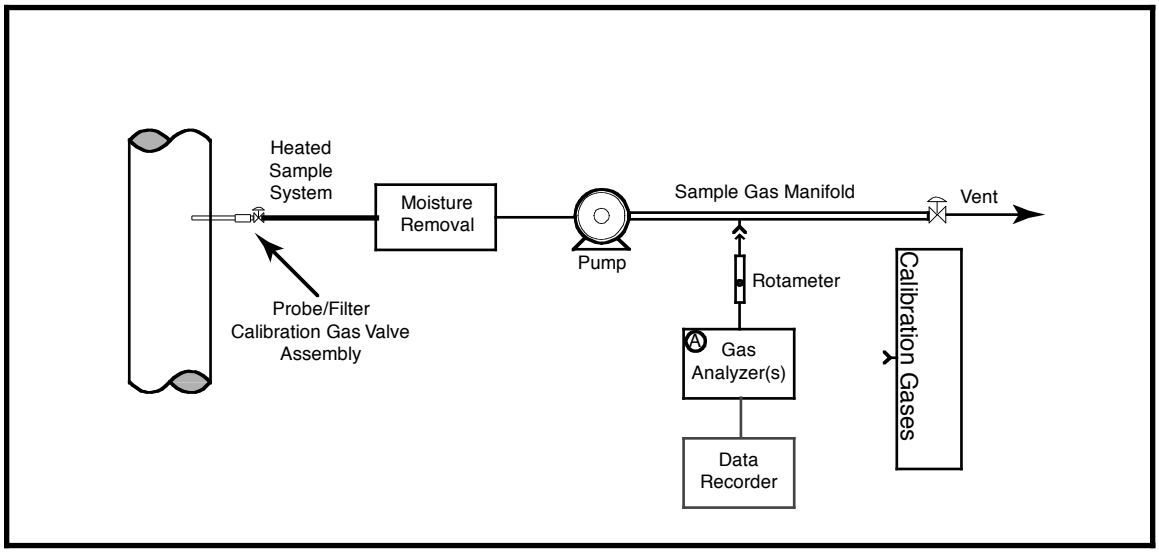

(A) Gas Analyzers - NO_X, CO, O_2

Analyzer Make	Analyzer Model	Detection Principle
NO_X Analyzer: Thermo Environmental	42i-HL	Chemiluminescence
CO Analyzer : Thermo Environmental	48i-HL	Non-dispersive Infra-red
O_2 Analyzer: Thermo Environmental	48i-HL	Paramagnetic Cell

A continuous analyzer is used to determine NO_X concentrations according to EPA Reference Method 7E. This instrument employs a chemiluminescent detection principle. The NO_X concentration and mass emission rates are expressed as NO_2 per the reference method.

A continuous analyzer is used to determine CO concentrations according to EPA Reference Method 10. The instrument employs a nondispersive infrared detector coupled to a gas filter correlation wheel, which eliminates the interferences due to water and carbon dioxide.

A continuous analyzer is used to determine O_2 concentrations according to EPA Reference Method 3A. The instrument is equipped with either an electrochemical or paramagnetic cell.

Data obtained from the continuous emission analyzers were recorded by a National Instruments data acquisition (DAQ) system using Labview software. A copy of the DAQ records can be found in the appendix of this report.

Quality assurance activities meeting the requirements of the EPA reference methods were performed during the turbine testing. Tables documenting quality assurance procedures are located in the appendix of this report.

Exhaust flow rate was determined according to the data reduction procedures provided in EPA Method 19. The O_2 F-Factor used in the emission rate calculation was either calculated based on a recent fuel analysis or the standard 8710 value for natural gas provided by EPA Method 19.

Nordon personnel recorded turbine compressor operating parameters. Ambient conditions were collected using a wet/dry bulb sling psychrometer to measure temperature and a barometer to measure absolute atmospheric pressure.

APPENDIX

Field Data Sheets
Example Calculations
Gas Certifications
Quality Assurance Activities
Run Data Logs

Plant: South Carlsbad Compressor Station												
Facility Owner: Enterprise												
Unit Owner: Enterprise												
Location: Loving, Eddy County, New Mexico												
Applicable Regulation: 40CFR60, Subpart GG												
Unit Make/Model: Solar Centaur T-4702												
Unit Number: T2 Ser. No. OHE12C7057												
Test Personnel: DWH / KRJ												
Date: January 4, 2014												
Run Number	01	02	03	04	05	06	07	08	09	10	11	12
Start Time	820	1910	947	1024	1101	1138	1215	1252	1329	1406	1445	1522
Stop Time												
Turbine/Compressor Operation												
Load Condition												
Fuel Flow (Mscfd)	938	839	873	718	836	778	913	877	635	891	596	618
Fuel Flow (scfh)	-											
Power Turbine Speed (%)	86	86	84	84	83	82	80	81	80	80	80	80
Gas Producer Speed (%)	95	95	95	95	95	95	95	95	95	95	95	95
Horsepower (hp)												
Rated Horsepower (hp)												
% Load												
Turbine Compressor Discharge, PCD (psig)	109	107	103	103	103	103	102	102	102	102	102	102
Turbine Temperature T5 (°F)	1047	1060	1073	1075	1077	1075	1078	1078	1079	1081	1079	1078
Gas Compressor Suction Pressure (psig)	330	330	338	341	341	356	359	360	361	363	364	364
Gas Compressor Discharge Pressure (psig)	~~88~~ 560	561	562	566	567	571	574	576	577	577	577	578
Gas Compressor Suction Temperature (°F)	88	93	97	97	93	91	92	92	92	93	93	93
Gas Compressor Discharge Temperature (°F)	171	176	177	177	171	165	165	165	165	165	165	165
Fuel Gas Presssure (psig)	195	188	192	190	191	190	191	190	191	192	191	194
Gas Production Rate (MMscfd)	38	34	33	33	33	41	40	39	40	40	41	41
Alt. Ft.	3140	3140	3140	3160	3180	3200	3220	3220	3240	3260	3260	3260
Ambient Conditions												
Barometric Pressure (absolute In. Hg)	26.64	26.64	26.64									
Temperature Dry (°F)	42	49	64	66	68	69	72	72	71	71	70	69
Temperature Wet (°F)	36	41	47	47	48	48	50	49	48	48	48	47

Certificate of Analysis

Number: 1030-14010388-001A

Houston Laboratories
8820 Interchange Drive
Houston, TX 77054
Phone 713-660-0901

Thor Olsen
Nordon Corporation
PO Box 1415
Round Rock, TX 78680

Jan. 21, 2014

Station Name: South Calrsbad Compressor Stition
Station Location: Loving, NM
Sample Point: Turbine Fuel Gas
Cylinder No: 0298
Analyzed: 01/16/2014 05:34:22 by JD

Sampled By:
Sample Of: Gas Spot
Sample Date: 01/04/2014 10:00
Sample Conditions: 190 psig, @ 65 °F
Method: GPA-2261M

Analytical Data

Components	Mol. %	Wt. %	GPM at 14.65 psia		
Nitrogen	1.204	1.797		GPM TOTAL C2+	2.870
Carbon Dioxide	1.556	3.648		GPM TOTAL C3+	1.036
Methane	86.800	74.184		GPM TOTAL iC5+	0.077
Ethane	6.877	11.016	1.834		
Propane	2.516	5.911	0.691		
Iso-butane	0.292	0.904	0.095		
n-Butane	0.552	1.709	0.173		
Iso-pentane	0.086	0.331	0.031		
n-Pentane	0.072	0.277	0.026		
Hexanes Plus	0.045	0.223	0.020		
	100.000	100.000	2.870		

Physical Properties	Total	C6+
Relative Density Real Gas	0.6496	3.2176
Calculated Molecular Weight	18.77	93.19
Compressibility Factor	0.9973	
GPA 2172-09 Calculation:		
Calculated Gross BTU per ft³ @ 14.65 psia & 60°F		
Real Gas Dry BTU	1097	5113
Water Sat. Gas Base BTU	1078	5024

Comments: H2O Mol% : 1.750 ; Wt% : 1.681
Reran Sample Confirmed GC Analysis

Hydrocarbon Laboratory Manager

Quality Assurance: The above analyses are performed in accordance with ASTM, UOP, GPA guidelines for quality assurance, unless otherwise stated.

Fuel Gas Analysis

Gross Btu/scf	**1098**
O_2 F-Factor dscf/MMBtu	**8698**
O_2 F-Factor (wscf/MMBtu)	**10660**
H_2O F-Factor (scf/MMBtu)	**1962**
CO_2 F-Factor (scf CO_2/MMBtu)	**1058**
Btu/lb	**22164**
Sp. Gr.	**0.6516**
F_o	**1.719**
Moisture Factor	**18.407**
VOC Fraction	**0.063**

Compound	**Mol. Formula**	**Mol. %**
Methane	CH4	86.800
Ethane	C2H6	6.877
Propane	C3H8	2.516
Isobutane	C4H10	0.292
n-Butane	C4H10	0.552
Isopentane	C5H12	0.086
n-Pentane	C5H12	0.072
NeoPentane	C5H12	
n-Hexane	C6H14	0.045
n-Heptane	C7H16	
n-Octane	C8H18	
Carbon dioxide	CO2	1.556
Nitrogen	N2	1.204
Total		100.000

Chain of Custody Form

REPORT TO:

Company: Nordon Corporation
Contact: Don Haynes
Contact Phone: 512-355-3786
Contact Email: don@nordoncorp.com

PROJECT INFO:

Client Name: Enterprise Products
Facility Name: South Carlsbad Compressor Station
Facility Location: Loving, NM
Project #: 14-0001

LABORATORY INFO:

Company: SPL, Inc.
Address: 8820 Interchange Dr
Address: Houston, TX 77054
Contact: Chris Staley
Contact Info: cstaley@spl-inc.com
Lab Project#:

NORDON Corporation
P.O Box 1415 Round Rock, TX 78680
PH: 512.355.3786 FAX: 512.355.3785

Turn Around Time

☒ Standard
☐ Rush
specify RUSH date(s):

Lab ID	Sample Identification	Sample Description	Collection Date	Analysis Requested: Method 323 (HCHO)	CTM-027 (NH3)	EPA Method 5	EPA Method 201a	EPA Method 202	ASTM D6667	ASTM D1945	Sample Matrix	Container Type	Remarks (volumes,special notes, etc.)
	1030-00406	natural gas	1/4/14						x	x	natural gas	cylinder	
	1030-00298	natural gas	1/4/14						x	x	natural gas	cylinder	

Relinquished By: [signature] **Date:** 1-13-14
Received By: [signature] **Date:** 1-13-14

Relinquished By: **Date:**
Received By: JAVIER CRUZ **Date:** 1/14/14 15:07

NOTES:

Page 1 of 1

Example Calculations: Method 7E Concentration Correction

Test Run #: DH-010414.01 **Component: NOx**

Observed Measurements/Data:		Scale, Certified Concentrations	
	Direct Calibration Results		
0.42	NOx direct zero, Cdiro	94.7	NOx chart scale, CS
94.68	NOx direct span, Cdirm	94.7	NOx actual calibration gas concentration, Cma
	System Calibration Results	0	Actual low-level gas concentration, Coa
1.66	NOx, initial zero reading, Csoi		
92.45	NOx inital span reading, Csmi		
0.85	NOx final zero reading, Cof		
91.68	NOx final span reading, Csmf		
	Run Results		
76.69	NOx run average, Caverage		

Bias Check Initial Zero (SBoi)

$$SBoi = \frac{(Csoi - Cdiro)}{CS}$$

= 1.31 (%)

Bias Check Initial Span (SBmi)

$$SBmi = \frac{(Csmi - Cdirm)}{CS}$$

= -2.36 (%)

Bias Check Final Zero (SBof)

$$SBof = \frac{(Csof - Cdiro)}{CS}$$

= 0.45 (%)

Bias Check Final Span (SBmf)

$$SBmf = \frac{(Csmf - Cdirm)}{CS}$$

= -3.17 (%)

Drift Check Zero (Do)

$$|SBof - SBoi|$$

= 0.86

Drift Check Span (Ds)

$$|SBmf - SBmi|$$

= 0.81

Bias- Average Zero (Coavg)

$$= \left(\frac{Csoi + Csof}{2}\right)$$

= 1.256 (ppmv)

Bias-Average Span (Cmavg)

$$= \left(\frac{CSmi + CSmf}{2}\right)$$

= 92.06 (ppmv)

NOx Concentration Correction

$$= (Caverage - Coavg) \times \left(\frac{Cma}{Cmavg - Coavg}\right)$$

78.7 (ppmv)

Example Calculations: Method 7E Concentration Correction

Test Run #: DH-010414.01 **Component: CO**

Observed Measurements/Data:		**Scale, Certified Concentrations**	
	Direct Calibration Results		
0.63	CO direct zero, Cdiro	193	CO chart scale, CS
194.59	CO direct span, Cdirm	193	CO actual calibration gas concentration, Cma
	System Calibration Results	0	Actual low-level gas concentration, Coa
-0.63	CO, initial zero reading, Csoi		
192.76	CO inital span reading, Csmi		
0.00	CO final zero reading, Cof		
191.43	CO final span reading, Csmf		
	Run Results		
12.70	CO run average, Caverage		

Bias Check Initial Zero (SBoi)

$$SBoi = \frac{(Csoi - Cdiro)}{CS}$$

= -0.65 (%)

Bias Check Initial Span (SBmi)

$$SBmi = \frac{(Csmi - Cdirm)}{CS}$$

= -0.95 (%)

Bias Check Final Zero (SBof)

$$SBof = \frac{(Csof - Cdiro)}{CS}$$

= -0.32 (%)

Bias Check Final Span (SBmf)

$$SBmf = \frac{(Csmf - Cdirm)}{CS}$$

= -1.63 (%)

Drift Check Zero (Do)

$$|SBof - SBoi|$$

= 0.33

Drift Check Span (Ds)

$$|SBmf - SBmi|$$

= 0.69

Bias- Average Zero (Coavg)

$$= \left(\frac{Csoi + Csof}{2} \right)$$

= -0.315 (ppmv)

Bias-Average Span (Cmavg)

$$= \left(\frac{CSmi + CSmf}{2} \right)$$

= 192.10 (ppmv)

CO Concentration Correction

$$= (Caverage - Coavg) \times \left(\frac{Cma}{Cmavg - Coavg} \right)$$

13.1 (ppmv)

Example Calculations: Method 7E Concentration Correction

Test Run #: DH-010414.01 **Component: O2**

Observed Measurements/Data:		**Scale, Certified Concentrations**	
	Direct Calibration Results		
0.13	O2 direct zero, Cdiro	20.92	O2 chart scale, CS
21.26	O2 direct span, Cdirm	20.92	O2 actual calibration gas Concentration, Cma
	System Calibration Results	0	Actual low-level gas Concentration, Coa
0.25	O2, initial zero reading, Csoi		
21.19	O2 inital span reading, Csmi		
0.28	O2 final zero reading, Csof		
21.21	O2 final span reading, Csmf		
	Run Results		
17.22	O2 run average, Caverage		

Bias Check Initial Zero (SBoi)

$$SBoi = \frac{(Csoi - Cdiro)}{CS}$$

= 0.57 (%)

Bias Check Initial Span (SBmi)

$$SBmi = \frac{(Csmi - Cdirm)}{CS}$$

= -0.37 (%)

Bias Check Final Zero (SBof)

$$SBof = \frac{(Csof - Cdiro)}{CS}$$

= 0.75 (%)

Bias Check Final Span (SBmf)

$$SBmf = \frac{(Csmf - Cdirm)}{CS}$$

= -0.25 (%)

Drift Check Zero (Do)

$$|SBof - SBoi|$$

= 0.17

Drift Check Span (Ds)

$$|SBmf - SBmi|$$

= 0.12

Bias- Average Zero (O2avg)

$$= \left(\frac{Csoi + Csof}{2} \right)$$

= 0.263 (%)

Bias-Average Span (Cmavg)

$$= \left(\frac{CSmi + CSmf}{2} \right)$$

= 21.20 (%)

O2 Concentration Correction

$$= (Caverage - Coavg) \times \left(\frac{Cma}{Cmavg - Coavg} \right)$$

16.9 (%)

Example Calculations: Method 19 Exhaust Flow

Test Run #: DH-010414.01 **Component: Stack Flow**

Observed Measurements/Data:		**Standards/Constants/Conversion Factors**	
39083	Fuel Flow Rate (scfh)	1000000	Btu per MMBtu
8698	Fuel O2 F-Factor (dscf/MMBtu)	20.9	O2 % in air
1098	Fuel Heating Value (Btu/scf)		
16.9	O2 final concentration (%)		

Derivation of Exhaust Flow using Equation 19-1 from Method 19

$$E\left(\frac{lb}{MMBtu}\right) = C_d\left(\frac{lb}{scf}\right)F_d\left(\frac{dscf}{MMBtu}\right)\times\frac{20.9}{(20.9-\%O_2)} \qquad \text{Eq. 19-1}$$

divide each side of equation by Cd to obtain the following

$$\left(\frac{scf}{MMBtu}\right) = F_d\left(\frac{dscf}{MMBtu}\right)\times\frac{20.9}{(20.9-\%O_2)}$$

multiply each side of equation by heat input (MMBtu/hr)

$$\left(\frac{scf}{hr}\right) = HeatInput\left(\frac{MMBtu}{hr}\right)\times F_d\left(\frac{dscf}{MMBtu}\right)\times\frac{20.9}{(20.9-\%O_2)}$$

Fuel Gas Heat Rate/Heat Input (MMBtu/hr)

$$= \left(\text{Fuel Flow Rate } \frac{scf}{hr}\right)\times\left(\text{Fuel Heating Value } \frac{Btu}{scf}\right)\times\left(\frac{1MMBtu}{1000000\,Btu}\right)$$

= 42.90 (MMBtu/hr)

Stack Gas Volumetric Flow Rate, Q (dscfh)

$$= \left(\text{HeatInput } \frac{MMBtu}{hr}\right)\times\left(\text{Fuel } O_2 \text{ F-Factor } \frac{dscf}{MMBtu}\right)\times\left(\frac{20.9}{20.9-O_2}\right)$$

= 1.97E+06 (dscfh)

Example Calculations: Emissions Calculations

Test Run #: DH-010414.01 **Component: NOx**

Observed Measurements/Data:		Standards/Constants/Conversion Factors	
78.7	NOx final concentration, Cd (ppmv)	528	EPA Standard Temperature, Tstd (°R)
1973673	Average Stack Gas Flow Rate, Q (DSCFH)	29.92	EPA Standard Pressure, Pstd (in. Hg)
16.9	O2 final concentration (%)	385.3	Gas Constant @ EPA STP (SCF/lb-mol)
3630	Horsepower (Hp)	28.317	Liters per Cubic Foot
8698	Fuel O2 Factor (DSCF/MMBtu)	46	NOx molecular wt. (NO2), MW (lb/lb-mol)
		0.001912	Conversion constant (NOx ppm to g/m3)
		8760	hours per year
		2000	pounds per ton
		0.028317	cubic meters per cubic feet

NOx Emissions (ppmv @ 15%O2): *Applicable* yes

$$= \text{ppmv@15\%O}_2 = Cd \times \left(\frac{20.9\text{-}15}{20.9\text{-O}_2 \text{ concentration (\%)}} \right)$$

= 117 ppmv @15% O2

NOx Emission Rate (g/hp-hr): *Applicable* no

$$= \left(\frac{\text{g}}{\text{HP} - \text{hr}} \right) = \frac{Cd \times .001912 \times Q \times \left(\frac{0.028317 m^3}{ft^3} \right)}{HP}$$

= NOT APPLICABLE

NOx Emission Rate (lb/hr): *Applicable* yes

$$= \left(\frac{ppmv}{10^6} \right) \times \text{Average Stack Flow,Q} \times \left(\frac{MW}{385.3} \right)$$

= 18.54 (lb/hr)

NOx Emission Rate (tons/year): *Applicable* yes

$$= \left(\frac{\text{tons}}{\text{yr}} \right) = \frac{\text{lb}}{\text{hr}} \times \frac{8760 \text{ hr}}{\text{year}} \times \frac{\text{ton}}{2000 \text{ lb}}$$

= 81.19 (tons/yr)

NOx Emissions (lb/MMBtu): *Applicable* no

$$= \left(\frac{lb}{MMBtu} \right) = \left(\frac{Cd}{10^6} \right) \times \left(\frac{MW}{385.3} \right) \times \left(\frac{DSCF}{MMBtu} \right) \times \left(\frac{20.9}{(20.9\text{-O}_2 \text{ concentration (\%)})} \right)$$

= NOT APPLICABLE

Example Calculations: Emissions Calculations

Test Run #: DH-010414.01 **Component: CO**

Observed Measurements/Data:		Standards/Constants/Conversion Factors	
13.1	CO final concentration, Cd (ppmv)	528	EPA Standard Temperature, Tstd (°R)
1973673	Average Stack Gas Flow Rate, Q (DSCFH)	29.92	EPA Standard Pressure, Pstd (in. Hg)
16.9	O2 final concentration (%)	385.3	Gas Constant @ EPA STP (SCF/lb-mol)
3630	Horsepower (Hp)	28.317	Liters per Cubic Foot
8698	Fuel O2 Factor (DSCF/MMBtu)	28	CO molecular wt., MW (lb/lb-mol)
		0.001164	Conversion constant (CO ppm to g/m3)
		8760	hours per year
		2000	pounds per ton
		0.028317	cubic meters per cubic feet

CO Emissions (ppmv @ 15%O2): *Applicable* no

$$= \text{ppmv@15\%O}_2 = Cd \times \left(\frac{20.9\text{-}15}{20.9\text{-O}_2 \text{ concentration (\%)}} \right)$$

= NOT APPLICABLE

CO Emission Rate (g/hp-hr): *Applicable* no

$$= \left(\frac{\text{g}}{\text{HP} - \text{hr}} \right) = \frac{Cd \times .001164 \times Q \times \left(\frac{0.028317 m^3}{ft^3} \right)}{HP}$$

= NOT APPLICABLE

CO Emission Rate (lb/hr): *Applicable* yes

$$= \left(\frac{ppmv}{10^6} \right) \times \text{Average Stack Flow,Q} \times \left(\frac{MW}{385.3} \right)$$

= 1.87 (lb/hr)

CO Emission Rate (tons/year): *Applicable* yes

$$= \left(\frac{\text{tons}}{\text{yr}} \right) = \frac{\text{lb}}{\text{hr}} \times \frac{8760 \text{ hr}}{\text{year}} \times \frac{\text{ton}}{2000 \text{ lb}}$$

= 8.20 (tons/yr)

CO Emissions (lb/MMBtu): *Applicable* no

$$= \left(\frac{lb}{MMBtu} \right) = \left(\frac{Cd}{10^6} \right) \times \left(\frac{MW}{385.3} \right) \times \left(\frac{DSCF}{MMBtu} \right) \times \left(\frac{20.9}{(20.9\text{-O}_2 \text{ concentration (\%)})} \right)$$

= NOT APPLICABLE

THE LINDE GROUP

Linde

CERTIFICATE OF ANALYSIS

EPA PROTOCOL MIXTURE

PROCEDURE # : G1

PGVP ID#: I12013
CUSTOMER: UNION CITY
SALES#: 501210969
PROD#: 1254051
P.O.# : 4501210969
MATERIAL#: 24091202
CERTIFICATION DATE: 01-May-2013
EXPIRATION DATE: 02-May-2021
(Using the May 2012 Revision of the EPA Protocol)

GAS CODE: APPVD
CYLINDER # : CC-310704
CYLINDER PRES: 2000 PSIG
CYLINDER VALVE: CGA 660
CYLINDER SIZE: 2A
CYLINDER MATERIAL: Aluminum
GAS VOLUME: 4000 Liter
BLEND TOLERANCE: 5% Relative
PAGE: 1 of 1

CERTIFICATION HISTORY

COMPONENT	DATE OF ASSAY	MEAN CONCENTRATION	CERTIFIED CONCENTRATION	ANALYTICAL ACCURACY
Propane	01-May-2013	30.0 ppm	30.0 ppm	+/- 1%
Nitric Oxide	24-Apr-2013 01-May-2013	47.4 ppm 47.3 ppm	47.3 ppm	+/- 1%
NOx			47.3 ppm	Reference Value Only
Carbon Monoxide	01-May-2013	95.3 ppm	95.3 ppm	+/- 1%

BALANCE Nitrogen

PREVIOUS CERTIFICATION DATES: None

REFERENCE STANDARDS

COMPONENT	SRM/NTRM#	CYLINDER#	CONCENTRATION
Propane	GMIS-1	cc-113884	100.5 ppm
Nitric Oxide	GMIS-1	CC-278874	100.7 ppm
Carbon Monoxide	GMIS-1	cc-88590	96.8 ppm

INSTRUMENTATION

COMPONENT	MAKE/MODEL	SERIAL #	DETECTOR	CALIBRATION DATE(S)
Propane	H. Packard 6890	US00001434	GC - FID	01-May-2013
Nitric Oxide	CAI 400-CLD	6L09004	Cheml	01-Apr-2013
Carbon Monoxide	Horiba VIA-510	570423011	NDIR	19-Apr-2013

THIS STANDARD IS NIST TRACEABLE. IT WAS CERTIFIED ACCORDING TO THE 1997 EPA PROTOCOL PROCEDURES. DO NOT USE THIS STANDARD IF THE CYLINDER PRESSURE IS LESS THAN 100 PSIG.

ANALYST: _____
MATTHEW JACKSON

Linde Gas North America LLC

DATE: 01-May-2013

(908) 329-9700 Main (908) 329-9740 Fax
www.LindeGas.com

Assay Laboratory: Red Ball TGS
555 Craig Kennedy Way
Shreveport, LA 71107
800-551-8150

CERTIFICATE OF ANALYSIS
EPA PROTOCOL GAS

Cylinder Number:	EB0027577	**Certification Date:**	10/29/2012
Product ID Number:	124749	**Expiration Date:**	**10/22/2016**
Cylinder Pressure:	1900 PSIG	**MFG Facility:**	RBTGS-Shreveport-LA
COA Number:	GC1210170814-0	**Lot Number:**	GC1210170814
Customer PO. NO.:		**Tracking Number:**	048358699
Customer		**Previous Certification Dates:**	

This calibration standard has been certified per the 1997 EPA Traceability Protocol, Document EPA-600/97/121, using procedure G1 and/or G2. All values so noted are certified to be +/-1% NIST Traceable.

Do Not Use This Cylinder Below 150 psig (1.0 Megapascal).

Certified Concentration(s)

Component	Concentration	Analytical Principle	Accuracy
Nitric Oxide	**94.5 PPM**	Non Dispersive Infrared Absorptiometry	**:ulate: High Unce**
Total Oxides of Nitrogen	**94.7 PPM**	Non Dispersive Infrared Absorptiometry	
Propane	**51 PPM**	FTIR	**+/- 1% NIST**
Carbon Monoxide	**193 PPM**	Gas Correlation Filter	**+/- 1% NIST**
Nitrogen	Balance		

Reference Standard(s)

Type	Component	Balance Gas	Concentration	Cylinder Number	Expiration	NIST Reference
GMIS	Nitric Oxide	Nitrogen	98.6 PPM	CC238350	2/14/2013	SRM 1686b
GMIS	Nitric Oxide	Nitrogen	98.6 PPM	CC238350	2/14/2013	SRM 1686b
GMIS	Carbon Monoxide	Nitrogen	398 PPM	EB0005726	1/5/2014	NTRM 021003
SRM	Propane	Nitrogen	49 PPM	CAL018150	8/17/2017	SRM 1667b

Analytical Information

Component	Nitric Oxide		
Analysis Date:	10/22/2012		
Z 0.152	S 16.337	C 15.549	Conc. 93.5 PPM
S 16.399	C 15.733	Z 0.109	Conc. 94.6 PPM
C 15.71	Z 0.088	S 16.451	Conc. 94.4 PPM

Analysis Date:	10/29/2012		
Z 0.295	S 16.912	C 16.321	Conc. 94.9 PPM
S 16.961	C 16.303	Z 0.281	Conc. 94.8 PPM
C 16.31	Z 0.325	S 16.9825	Conc. 94.8 PPM

Component	Carbon Monoxide		
Analysis Date:	10/22/2012		
Z 0.3390	S 41.027	C 19.9610	Conc. 192 PPM
S 41.0170	C 20.021	Z 0.294	Conc. 193 PPM
C 20.036	Z 0.3510	S 40.98	Conc. 193 PPM

Component	Propane		
Analysis Date:	10/26/2012		
Z 0.0110	S 49.01	C 50.7800	Conc. 51 PPM
S 49.0400	C 50.8	Z 0.004	Conc. 51 PPM
C 50.8	Z 0.0060	S 49.03	Conc. 51 PPM

Z= Zero Gas S= Span Gas C= Candidate Gas

Fred Holt, CHMM
Quality Control

Red Ball Technical Gas Service
PGVP Vendor ID # G12012
Information and Ordering
800-551-8150
Fax (318-425-6309)

Assay Laboratory: Red Ball TGS
555 Craig Kennedy Way
Shreveport, LA 71107
800-551-8150

EPA PROTOCOL GAS CERTIFICATE OF ANALYSIS

Cylinder Number:	EB0046618	**Certification Date**:	07/29/2013
Product ID Number:	124752	**Expiration Date:**	07/27/2021
Cylinder Pressure:	1900 PSIG	**MFG Facility:**	RBTGS-Shreveport-LA
COA #	ML130726.170231.3-0	**Lot Number:**	ML130726.170231.3
Customer PO. NO.:		**Tracking Number:**	065271430
Customer:		**Previous Certification Dates:**	

This calibration standard has been certified per the May 2012 EPA Traceability Protocol, Document EPA-600/R-12/531, using procedure G1.

Do Not Use This Cylinder Below 100 psig (0.7 Megapascal).

Certified Concentration(s)

Component	Concentration	Uncertainty	Analytical Principle
Carbon Dioxide	**13.9 %**	±0.11 %	NDIR
Oxygen	**10.99 %**	±0.07 %	MPA
Nitrogen	Balance		

Analyitcal Measurement Data Available Online.

Reference Standard(s)

Lot	Expiration	Type	Balance	Component	Concentration	Uncertainty(%)	NIST Reference
GC1106080848	09/07/2013	GMIS	N2	CO2	12.57 %	0.384	3221755
GC0807251121	04/28/2019	GMIS	N2	O2	24.43 %	0.52	71001

Analytical Instrumentation

Component	Analytical Principle	Make	Model	Serial	MPC Date
CO2	NDIR	Horiba	VA-3013	H0000P11	07/10/2013
O2	MPA	Horiba	VA-3013	H0000P11	07/11/2013

Z= Zero Gas S= Span Gas C= Candidate Gas

Red Ball Technical Gas Service
PGVP Vendor ID # G12013
Information and Ordering
800-551-8150
Fax (318-425-6309)

Fred Holt

Fred Holt, CHMM
Quality Control

Assay Laboratory: Red Ball TGS
555 Craig Kennedy Way
Shreveport, LA 71107
800-551-8150

EPA PROTOCOL GAS CERTIFICATE OF ANALYSIS

Cylinder Number:	EB0039038	**Certification Date**:	08/02/2013
Product ID Number:	124753	**Expiration Date:**	07/31/2021
Cylinder Pressure:	1900 PSIG	**MFG Facility:**	RBTGS-Shreveport-LA
COA #	ML130726.170120.1-0	**Lot Number:**	ML130726.170120.1
Customer PO. NO.:		**Tracking Number:**	065155673
Customer:		**Previous Certification Dates:**	

This calibration standard has been certified per the May 2012 EPA Traceability Protocol, Document EPA-600/R-12/531, using procedure G1.

Do Not Use This Cylinder Below 100 psig (0.7 Megapascal).

Certified Concentration(s)

Component	Concentration	Uncertainty	Analytical Principle
Carbon Dioxide	**6.99 %**	±0.03 %	NDIR
Oxygen	**20.92 %**	±0.08 %	MPA
Nitrogen	Balance		

Analyitcal Measurement Data Available Online.

Reference Standard(s)

Lot	Expiration	Type	Balance	Component	Concentration	Uncertainty(%)	NIST Reference
GC1106080848	09/07/2013	GMIS	N2	CO2	12.57 %	0.384	3221755
GC0807251121	04/28/2019	GMIS	N2	O2	24.43 %	0.52	71001

Analytical Instrumentation

Component	Analytical Principle	Make	Model	Serial	MPC Date
CO2	NDIR	Horiba	VA-3013	H0000P11	07/31/2013
O2	MPA	Horiba	VA-3013	H0000P11	07/11/2013

Z= Zero Gas S= Span Gas C= Candidate Gas

Red Ball Technical Gas Service
PGVP Vendor ID # G12013
Information and Ordering
800-551-8150
Fax (318-425-6309)

Fred Holt

Fred Holt, CHMM
Quality Control

MATHESON
ask. . .The Gas Professionals™

1700 Scepter Rd
Waverly, TN 37185
931-296-3357

Certificate of Analysis - EPA Protocol Mixtures

Customer: NORDON

		Protocol:	Reference #:	Lot#:
Cylinder Number:	SX49930	G1	T176792-1	9302603567
Cylinder Pressure:	1900psig			
Last Analysis Date:	11/19/2012			
Expiration Date:	11/19/2014			

DO NOT USE THIS CYLINDER WHEN THE PRESSURE FALLS BELOW 150 PSIG

		REPLICATE RESPONSES			
		Date:	11/2/2012	Date:	11/19/2012
Component:	Nitrogen Dioxide		45.60		45.20
			45.60		45.26
Certified Conc:	45.38ppm +/- 1% REL		45.40		45.25

BALANCE GAS: Air

REFERENCE STANDARDS:

Component:	Nitrogen Dioxide
Reference Standard:	SRM
Cylinder #:	CAL016152
Concentration:	98.0ppm
Exp Date:	12/31/2015
Lot #:	2660-C-57

CERTIFICATION INSTRUMENTS

Component:	Nitrogen Dioxide
Make/Model:	HORIBA CLA-510SS
Serial Number:	8H4SOCTJ
Measurement Principle:	CHEMI
Last Calibration:	11/2/2012

Notes:

This Certification was performed according to EPA Traceability Protocol for Assay & Certification of Gaseous Calibration Standards September 1997, using procedure G1 and/or G2.

U.S. EPA Vendor ID No.: D52012: PGVP Participation Date: 1/1/2012: PGVP Renewal Date: 12/31/12

Analyst: Julie Higgins Date: 11/26/2012

Julie Higgins

NOx Converter Efficiency and Response Times

Date: January 4, 2014

METHOD 7E NOx CONVERTER EFFICIENCY TEST

Certified NO_2 Conc. (ppmv)	45.38
Measured NOx Conc. (ppmv)	41.03
Converter Efficiency (%)	**90**

Criteria: Converter Efficiency should be 90% or greater

METHOD 7E RESPONSE TIMES

	NOx (ppmv)	**CO (ppmv)**	**O_2 (%)**
Low-Level Gas Concentration	0	0	0
Upscale Gas Concentration	94.7	193	20.92
95% of Upscale Gas	90.0	183.4	19.9

	NOx	**CO**	**O_2**
Low-Level Gas RT (sec)	70	66	30
Upscale Gas RT (sec)	63	63	33
Longer Analyzer RT Interval (sec)	70	66	33
System Response Time (sec)	70		
*System Response Time (min)	1.2		
†System Purge Time (min)	**2.3**		

*Longer interval of time to reach 95% of stable stable response for low & upscale level gases.

Criteria: †System Purge Time shall be ≥ 2 times the System Response Time

Analyzer Gas Quality Assurance

Test Run:	DH-010414.01		
Parameter	**NOx**	**CO**	**O2**
CALIBRATION ERROR DATA			
Range/Span Data			
Analyzer Range	100	200	25
Method 7E Span	94.7	193.0	20.9
Certified Calibration Gas Data			
Zero Level Certified Value (ppm or %)	0	0	0
Low Level Certified Value (ppm or %)	0.0	0.0	0.0
Mid Level Certified Value (ppm or %)	47.3	95.3	10.99
High Level Certified Value (ppm or %)	94.7	193.0	20.92
Calibration Error Observations (Direct)			
Zero Level Observed (ppm or %)	n/a	n/a	n/a
Low Level Observed (ppm or %)	0.4	0.6	0.1
Mid Level Observed (ppm or %)	46.9	96.7	11.2
High Level Observed (ppm or %)	94.7	194.6	21.3
Calibration Error Results			
Difference from Zero Level (%)	n/a	n/a	n/a
Difference from Low Level (%)	0.44	0.33	0.60
Difference from Mid Level (%)	0.39	0.71	0.87
Difference from High Level (%)	0.02	0.82	1.64
Allowable Difference (%)	(±2%)	(±2%)	(±2%)
TEST RUN DATA			
Bias Observations			
Low/Zero Level Cal. Gas Certified Value (ppm or %)	0.00	0.00	0.00
Upscale Cal. Gas Certified Value (ppm or %)	94.70	193.00	20.92
Initial Low/Zero Level Observed (ppm or %)	0.42	0.63	0.13
Initial Upscale Level Observed (ppm or %)	94.68	194.59	21.26
Initial Bias Low/Zero Level Gas (ppm or %)	1.66	-0.63	0.25
Initial Bias Upscale Level Gas (ppm or %)	92.45	192.76	21.19
Final Bias Low/Zero Level Gas (ppm or %)	0.85	0.00	0.28
Final Bias Upscale Level Gas (ppm or %)	91.68	191.43	21.21
Bias and Drift Results			
Initial Bias Low/Zero Level (%)	1.31	-0.65	0.57
Initial Bias Upscale Level (%)	-2.36	-0.95	-0.37
Final Bias Low/Zero Level (%)	0.45	-0.32	0.75
Final Bias Upscale Level (%)	-3.17	-1.63	-0.25
Allowable Bias (%)	(±5%)	(±5%)	(±5%)
Low/Zero Level Drift Calculation (%)	0.86	0.33	0.17
Upscale Level Drift Calculation (%)	0.81	0.69	0.12
Allowable Drift (%)	(±3%)	(±3%)	(±3%)
Raw Results (ppmv or %)	76.69	12.70	17.22
Minimum Detection Limit (MDL)	0.5	1.0	0.1
Corrected Results (ppmv or %)	78.7	13.1	16.9
***Final Results (ppmv or %)**	**78.7**	**13.1**	**16.9**

**Final Results which are shown in Italics represent the MDL for that analyte*

Analyzer Gas Quality Assurance

Test Run:	DH-010414.02		
Parameter	**NOx**	**CO**	**O2**
CALIBRATION ERROR DATA			
Range/Span Data			
Analyzer Range	100	200	25
Method 7E Span	94.7	193.0	20.9
Certified Calibration Gas Data			
Zero Level Certified Value (ppm or %)	0	0	0
Low Level Certified Value (ppm or %)	0.0	0.0	0.0
Mid Level Certified Value (ppm or %)	47.3	95.3	10.99
High Level Certified Value (ppm or %)	94.7	193.0	20.92
Calibration Error Observations (Direct)			
Zero Level Observed (ppm or %)	0.0	0.0	0.0
Low Level Observed (ppm or %)	0.4	0.6	0.1
Mid Level Observed (ppm or %)	46.9	96.7	11.2
High Level Observed (ppm or %)	94.7	194.6	21.3
Calibration Error Results			
Difference from Zero Level (%)	n/a	n/a	n/a
Difference from Low Level (%)	0.44	0.33	0.60
Difference from Mid Level (%)	0.39	0.71	0.87
Difference from High Level (%)	0.02	0.82	1.64
Allowable Difference (%)	(±2%)	(±2%)	(±2%)
TEST RUN DATA			
Bias Observations			
Low/Zero Level Cal. Gas Certified Value (ppm or %)	0.00	0.00	0.00
Upscale Cal. Gas Certified Value (ppm or %)	94.70	193.00	20.92
Initial Low/Zero Level Observed (ppm or %)	0.42	0.63	0.13
Initial Upscale Level Observed (ppm or %)	94.68	194.59	21.26
Initial Bias Low/Zero Level Gas (ppm or %)	0.85	0.00	0.28
Initial Bias Upscale Level Gas (ppm or %)	91.68	191.43	21.21
Final Bias Low/Zero Level Gas (ppm or %)	2.50	-1.50	0.34
Final Bias Upscale Level Gas (ppm or %)	91.54	190.52	21.25
Bias and Drift Results			
Initial Bias Low/Zero Level (%)	0.45	-0.32	0.75
Initial Bias Upscale Level (%)	-3.17	-1.63	-0.25
Final Bias Low/Zero Level (%)	2.20	-1.11	1.00
Final Bias Upscale Level (%)	-3.32	-2.11	-0.05
Allowable Bias (%)	(±5%)	(±5%)	(±5%)
Low/Zero Level Drift Calculation (%)	1.75	0.78	0.26
Upscale Level Drift Calculation (%)	0.15	0.47	0.20
Allowable Drift (%)	(±3%)	(±3%)	(±3%)
Raw Results (ppmv or %)	78.07	11.51	17.23
Minimum Detection Limit (MDL)	0.5	1.0	0.1
Corrected Results (ppmv or %)	80.4	12.3	16.9
***Final Results (ppmv or %)**	**80.4**	**12.3**	**16.9**

**Final Results which are shown in Italics represent the MDL for that analyte*

Analyzer Gas Quality Assurance

Test Run:	DH-010414.03		
Parameter	**NOx**	**CO**	**O2**
CALIBRATION ERROR DATA			
Range/Span Data			
Analyzer Range	100	200	25
Method 7E Span	94.7	193.0	20.9
Certified Calibration Gas Data			
Zero Level Certified Value (ppm or %)	0	0	0
Low Level Certified Value (ppm or %)	0.0	0.0	0.0
Mid Level Certified Value (ppm or %)	47.3	95.3	10.99
High Level Certified Value (ppm or %)	94.7	193.0	20.92
Calibration Error Observations (Direct)			
Zero Level Observed (ppm or %)	0.0	0.0	0.0
Low Level Observed (ppm or %)	0.4	0.6	0.1
Mid Level Observed (ppm or %)	46.9	96.7	11.2
High Level Observed (ppm or %)	94.7	194.6	21.3
Calibration Error Results			
Difference from Zero Level (%)	n/a	n/a	n/a
Difference from Low Level (%)	0.44	0.33	0.60
Difference from Mid Level (%)	0.39	0.71	0.87
Difference from High Level (%)	0.02	0.82	1.64
Allowable Difference (%)	(±2%)	(±2%)	(±2%)
TEST RUN DATA			
Bias Observations			
Low/Zero Level Cal. Gas Certified Value (ppm or %)	0.00	0.00	0.00
Upscale Cal. Gas Certified Value (ppm or %)	94.70	193.00	20.92
Initial Low/Zero Level Observed (ppm or %)	0.42	0.63	0.13
Initial Upscale Level Observed (ppm or %)	94.68	194.59	21.26
Initial Bias Low/Zero Level Gas (ppm or %)	2.50	-1.50	0.34
Initial Bias Upscale Level Gas (ppm or %)	91.54	190.52	21.25
Final Bias Low/Zero Level Gas (ppm or %)	2.11	-2.63	0.36
Final Bias Upscale Level Gas (ppm or %)	91.12	189.62	21.30
Bias and Drift Results			
Initial Bias Low/Zero Level (%)	2.20	-1.11	1.00
Initial Bias Upscale Level (%)	-3.32	-2.11	-0.05
Final Bias Low/Zero Level (%)	1.79	-1.69	1.13
Final Bias Upscale Level (%)	-3.76	-2.58	0.18
Allowable Bias (%)	(±5%)	(±5%)	(±5%)
Low/Zero Level Drift Calculation (%)	0.41	0.58	0.12
Upscale Level Drift Calculation (%)	0.45	0.47	0.23
Allowable Drift (%)	(±3%)	(±3%)	(±3%)
Raw Results (ppmv or %)	81.34	10.56	17.27
Minimum Detection Limit (MDL)	0.5	1.0	0.1
Corrected Results (ppmv or %)	84.1	12.7	16.9
***Final Results (ppmv or %)**	**84.1**	**12.7**	**16.9**

**Final Results which are shown in Italics represent the MDL for that analyte*

Company	Plant Name	Unit Make	Unit Model	Unit Number	Status	Date	Time	NOx (ppmvd)	CO (ppmvd)	O2 (%, dry)
Enterprise Products	South Carlsbad CS	Solar	Centaur	Calibration Error	0NOx/0CO/0O2	1/4/14	7:21	0.42	0.63	0.13
Enterprise Products	South Carlsbad CS	Solar	Centaur			1/4/14	7:22	3.92	0.66	20.19
Enterprise Products	South Carlsbad CS	Solar	Centaur			1/4/14	7:23	93.51	0.21	21.24
Enterprise Products	South Carlsbad CS	Solar	Centaur	Calibration Error	94.7NOx/20.92O2	1/4/14	7:24	94.68	0.27	21.26
Enterprise Products	South Carlsbad CS	Solar	Centaur			1/4/14	7:25	71.35	-6.37	10.85
Enterprise Products	South Carlsbad CS	Solar	Centaur			1/4/14	7:26	39.61	-7.87	10.79
Enterprise Products	South Carlsbad CS	Solar	Centaur	Calibration Error	47.3NOx/10.99O2	1/4/14	7:27	46.93	-1.12	11.17
Enterprise Products	South Carlsbad CS	Solar	Centaur			1/4/14	7:28	38.41	116.68	0.17
Enterprise Products	South Carlsbad CS	Solar	Centaur	Calibration Error	193CO	1/4/14	7:29	24.61	194.59	0.15
Enterprise Products	South Carlsbad CS	Solar	Centaur			1/4/14	7:30	24.27	169.53	0.16
Enterprise Products	South Carlsbad CS	Solar	Centaur	Calibration Error	95.3CO	1/4/14	7:31	1.07	96.67	0.14
Enterprise Products	South Carlsbad CS	Solar	Centaur			1/4/14	7:32	3.55	62.58	0.13
Enterprise Products	South Carlsbad CS	Solar	Centaur			1/4/14	7:33	38.71	48.57	0.15
Enterprise Products	South Carlsbad CS	Solar	Centaur	CE Test	NO2	1/4/14	7:34	41.77	44.67	0.17
Enterprise Products	South Carlsbad CS	Solar	Centaur			1/4/14	7:35	25.81	1.20	0.14
Enterprise Products	South Carlsbad CS	Solar	Centaur			1/4/14	7:36	1.02	1.21	0.14
Enterprise Products	South Carlsbad CS	Solar	Centaur			1/4/14	7:37	0.81	0.97	0.14
Enterprise Products	South Carlsbad CS	Solar	Centaur			1/4/14	7:38	0.82	1.23	0.15
Enterprise Products	South Carlsbad CS	Solar	Centaur			1/4/14	7:39	0.76	1.12	0.14
Enterprise Products	South Carlsbad CS	Solar	Centaur			1/4/14	7:40	0.87	0.82	0.15
Enterprise Products	South Carlsbad CS	Solar	Centaur			1/4/14	7:41	0.84	1.17	0.13
Enterprise Products	South Carlsbad CS	Solar	Centaur			1/4/14	7:42	0.91	1.39	0.16
Enterprise Products	South Carlsbad CS	Solar	Centaur			1/4/14	7:43	0.76	0.92	0.14
Enterprise Products	South Carlsbad CS	Solar	Centaur			1/4/14	7:44	0.69	0.78	0.15
Enterprise Products	South Carlsbad CS	Solar	Centaur			1/4/14	7:45	1.06	0.94	0.19
Enterprise Products	South Carlsbad CS	Solar	Centaur			1/4/14	7:46	1.12	0.83	0.28
Enterprise Products	South Carlsbad CS	Solar	Centaur			1/4/14	7:47	1.26	1.15	0.52
Enterprise Products	South Carlsbad CS	Solar	Centaur			1/4/14	7:48	1.14	1.10	0.74
Enterprise Products	South Carlsbad CS	Solar	Centaur			1/4/14	7:49	1.19	1.02	0.93
Enterprise Products	South Carlsbad CS	Solar	Centaur			1/4/14	7:50	1.29	0.91	1.21
Enterprise Products	South Carlsbad CS	Solar	Centaur			1/4/14	7:51	1.38	1.42	1.39
Enterprise Products	South Carlsbad CS	Solar	Centaur			1/4/14	7:52	1.16	1.35	1.53
Enterprise Products	South Carlsbad CS	Solar	Centaur			1/4/14	7:53	1.41	1.26	1.78
Enterprise Products	South Carlsbad CS	Solar	Centaur			1/4/14	7:54	1.37	1.21	1.94
Enterprise Products	South Carlsbad CS	Solar	Centaur			1/4/14	7:55	1.27	1.13	2.16
Enterprise Products	South Carlsbad CS	Solar	Centaur			1/4/14	7:56	1.40	1.07	2.39
Enterprise Products	South Carlsbad CS	Solar	Centaur			1/4/14	7:57	1.37	1.29	2.66
Enterprise Products	South Carlsbad CS	Solar	Centaur			1/4/14	7:58	1.52	1.44	2.89
Enterprise Products	South Carlsbad CS	Solar	Centaur			1/4/14	7:59	1.42	1.31	3.07
Enterprise Products	South Carlsbad CS	Solar	Centaur			1/4/14	8:00	1.52	1.22	3.31
Enterprise Products	South Carlsbad CS	Solar	Centaur			1/4/14	8:01	1.45	1.23	3.51
Enterprise Products	South Carlsbad CS	Solar	Centaur			1/4/14	8:02	1.46	1.38	3.72
Enterprise Products	South Carlsbad CS	Solar	Centaur			1/4/14	8:03	1.57	1.59	3.97
Enterprise Products	South Carlsbad CS	Solar	Centaur			1/4/14	8:04	1.54	1.23	4.19
Enterprise Products	South Carlsbad CS	Solar	Centaur			1/4/14	8:05	1.57	1.22	4.41
Enterprise Products	South Carlsbad CS	Solar	Centaur			1/4/14	8:06	1.42	1.18	1.45
Enterprise Products	South Carlsbad CS	Solar	Centaur			1/4/14	8:07	0.81	0.92	0.19
Enterprise Products	South Carlsbad CS	Solar	Centaur			1/4/14	8:08	0.73	0.90	0.18
Enterprise Products	South Carlsbad CS	Solar	Centaur			1/4/14	8:09	0.78	0.84	0.18
Enterprise Products	South Carlsbad CS	Solar	Centaur			1/4/14	8:10	0.82	0.66	0.18
Enterprise Products	South Carlsbad CS	Solar	Centaur			1/4/14	8:11	22.76	13.77	17.03
Enterprise Products	South Carlsbad CS	Solar	Centaur			1/4/14	8:12	75.09	27.54	17.19
Enterprise Products	South Carlsbad CS	Solar	Centaur			1/4/14	8:13	76.40	20.20	18.18
Enterprise Products	South Carlsbad CS	Solar	Centaur			1/4/14	8:14	4.32	0.07	21.20
Enterprise Products	South Carlsbad CS	Solar	Centaur	Bias Check	0NOx/0CO/20.92O2	1/4/14	8:15	1.66	-0.63	21.19
Enterprise Products	South Carlsbad CS	Solar	Centaur			1/4/14	8:16	28.78	86.95	0.47
Enterprise Products	South Carlsbad CS	Solar	Centaur	Bias Check	94.7NOx/193CO/0O2	1/4/14	8:17	92.45	192.76	0.25
Enterprise Products	South Carlsbad CS	Solar	Centaur			1/4/14	8:18	88.63	101.50	17.01
Enterprise Products	South Carlsbad CS	Solar	Centaur			1/4/14	8:19	76.49	16.82	17.18
Enterprise Products	South Carlsbad CS	Solar	Centaur	T2, P1	DH-010414.01	1/4/14	8:20	76.40	31.71	17.19
Enterprise Products	South Carlsbad CS	Solar	Centaur	T2, P1	DH-010414.01	1/4/14	8:21	76.70	19.32	17.19
Enterprise Products	South Carlsbad CS	Solar	Centaur	T2, P1	DH-010414.01	1/4/14	8:22	76.52	16.99	17.20
Enterprise Products	South Carlsbad CS	Solar	Centaur	T2, P1	DH-010414.01	1/4/14	8:23	76.59	12.25	17.20
Enterprise Products	South Carlsbad CS	Solar	Centaur	T2, P2	DH-010414.01	1/4/14	8:24	76.64	9.08	17.19
Enterprise Products	South Carlsbad CS	Solar	Centaur	T2, P2	DH-010414.01	1/4/14	8:25	77.06	21.17	17.18
Enterprise Products	South Carlsbad CS	Solar	Centaur	T2, P2	DH-010414.01	1/4/14	8:26	77.23	14.08	17.22
Enterprise Products	South Carlsbad CS	Solar	Centaur	T2, P3	DH-010414.01	1/4/14	8:27	76.98	8.87	17.21

Company	Plant Name	Unit Make	Unit Model	Unit Number	Status	Date	Time	NOx (ppmvd)	CO (ppmvd)	O2 (%, dry)
Enterprise Products	South Carlsbad CS	Solar	Centaur	T2, P3	DH-010414.01	1/4/14	8:28	77.28	13.24	17.20
Enterprise Products	South Carlsbad CS	Solar	Centaur	T2, P3	DH-010414.01	1/4/14	8:29	76.89	25.32	17.20
Enterprise Products	South Carlsbad CS	Solar	Centaur	T2, P4	DH-010414.01	1/4/14	8:30	76.32	10.29	17.20
Enterprise Products	South Carlsbad CS	Solar	Centaur	T2, P4	DH-010414.01	1/4/14	8:31	76.24	14.23	17.20
Enterprise Products	South Carlsbad CS	Solar	Centaur	T2, P4	DH-010414.01	1/4/14	8:32	76.73	14.74	17.23
Enterprise Products	South Carlsbad CS	Solar	Centaur	T2, P5	DH-010414.01	1/4/14	8:33	76.75	15.37	17.21
Enterprise Products	South Carlsbad CS	Solar	Centaur	T2, P5	DH-010414.01	1/4/14	8:34	77.70	12.23	17.21
Enterprise Products	South Carlsbad CS	Solar	Centaur	T2, P5	DH-010414.01	1/4/14	8:35	77.61	12.50	17.22
Enterprise Products	South Carlsbad CS	Solar	Centaur	T2, P6	DH-010414.01	1/4/14	8:36	77.56	12.06	17.23
Enterprise Products	South Carlsbad CS	Solar	Centaur	T2, P6	DH-010414.01	1/4/14	8:37	77.71	12.16	17.23
Enterprise Products	South Carlsbad CS	Solar	Centaur	T2, P6	DH-010414.01	1/4/14	8:38	77.66	12.70	17.23
Enterprise Products	South Carlsbad CS	Solar	Centaur			1/4/14	8:39	77.64	11.35	19.70
Enterprise Products	South Carlsbad CS	Solar	Centaur			1/4/14	8:40	4.26	1.07	21.24
Enterprise Products	South Carlsbad CS	Solar	Centaur			1/4/14	8:41	3.69	3.05	18.20
Enterprise Products	South Carlsbad CS	Solar	Centaur			1/4/14	8:42	77.11	13.11	17.23
Enterprise Products	South Carlsbad CS	Solar	Centaur	T2, P7	DH-010414.01	1/4/14	8:43	77.46	14.12	17.22
Enterprise Products	South Carlsbad CS	Solar	Centaur	T2, P7	DH-010414.01	1/4/14	8:44	77.58	14.16	17.22
Enterprise Products	South Carlsbad CS	Solar	Centaur	T2, P7	DH-010414.01	1/4/14	8:45	77.43	12.11	17.20
Enterprise Products	South Carlsbad CS	Solar	Centaur	T2, P7	DH-010414.01	1/4/14	8:46	77.61	11.83	17.21
Enterprise Products	South Carlsbad CS	Solar	Centaur	T2, P8	DH-010414.01	1/4/14	8:47	77.62	4.15	17.22
Enterprise Products	South Carlsbad CS	Solar	Centaur	T2, P8	DH-010414.01	1/4/14	8:48	77.03	11.53	17.24
Enterprise Products	South Carlsbad CS	Solar	Centaur	T2, P8	DH-010414.01	1/4/14	8:49	77.02	11.62	17.23
Enterprise Products	South Carlsbad CS	Solar	Centaur	T2, P9	DH-010414.01	1/4/14	8:50	76.36	8.02	17.20
Enterprise Products	South Carlsbad CS	Solar	Centaur	T2, P9	DH-010414.01	1/4/14	8:51	75.50	3.66	17.26
Enterprise Products	South Carlsbad CS	Solar	Centaur	T2, P9	DH-010414.01	1/4/14	8:52	75.09	10.41	17.59
Enterprise Products	South Carlsbad CS	Solar	Centaur	T2, P10	DH-010414.01	1/4/14	8:53	74.59	6.33	17.22
Enterprise Products	South Carlsbad CS	Solar	Centaur	T2, P10	DH-010414.01	1/4/14	8:54	73.10	9.95	17.09
Enterprise Products	South Carlsbad CS	Solar	Centaur	T2, P10	DH-010414.01	1/4/14	8:55	76.57	11.42	17.27
Enterprise Products	South Carlsbad CS	Solar	Centaur	T2, P11	DH-010414.01	1/4/14	8:56	75.47	9.41	17.20
Enterprise Products	South Carlsbad CS	Solar	Centaur	T2, P11	DH-010414.01	1/4/14	8:57	75.35	8.14	17.23
Enterprise Products	South Carlsbad CS	Solar	Centaur	T2, P11	DH-010414.01	1/4/14	8:58	76.93	13.24	17.25
Enterprise Products	South Carlsbad CS	Solar	Centaur	T2, P12	DH-010414.01	1/4/14	8:59	75.55	9.57	17.26
Enterprise Products	South Carlsbad CS	Solar	Centaur	T2, P12	DH-010414.01	1/4/14	9:00	77.90	12.98	17.24
Enterprise Products	South Carlsbad CS	Solar	Centaur	T2, P12	DH-010414.01	1/4/14	9:01	77.66	11.54	17.24
					DH-010414.01 Averages			**76.69**	**12.70**	**17.22**
Enterprise Products	South Carlsbad CS	Solar	Centaur			1/4/14	9:02	70.88	6.28	16.79
Enterprise Products	South Carlsbad CS	Solar	Centaur			1/4/14	9:03	12.04	2.26	20.77
Enterprise Products	South Carlsbad CS	Solar	Centaur	Bias Check	0NOx/20.92O2	1/4/14	9:04	0.85	0.00	21.21
Enterprise Products	South Carlsbad CS	Solar	Centaur			1/4/14	9:05	23.26	94.71	0.26
Enterprise Products	South Carlsbad CS	Solar	Centaur	Bias Check	94.7NOx/0O2	1/4/14	9:06	91.68	191.43	0.28
Enterprise Products	South Carlsbad CS	Solar	Centaur			1/4/14	9:07	88.96	113.37	16.91
Enterprise Products	South Carlsbad CS	Solar	Centaur			1/4/14	9:08	77.33	13.19	17.22
Enterprise Products	South Carlsbad CS	Solar	Centaur	T2	DH-010414.02	1/4/14	9:09	77.43	13.64	17.21
Enterprise Products	South Carlsbad CS	Solar	Centaur	T2	DH-010414.02	1/4/14	9:10	77.51	11.03	17.23
Enterprise Products	South Carlsbad CS	Solar	Centaur	T2	DH-010414.02	1/4/14	9:11	77.43	11.77	17.22
Enterprise Products	South Carlsbad CS	Solar	Centaur	T2	DH-010414.02	1/4/14	9:12	77.41	12.91	17.22
Enterprise Products	South Carlsbad CS	Solar	Centaur	T2	DH-010414.02	1/4/14	9:13	77.71	11.17	17.22
Enterprise Products	South Carlsbad CS	Solar	Centaur	T2	DH-010414.02	1/4/14	9:14	77.45	10.93	17.21
Enterprise Products	South Carlsbad CS	Solar	Centaur	T2	DH-010414.02	1/4/14	9:15	77.52	10.80	17.24
Enterprise Products	South Carlsbad CS	Solar	Centaur	T2	DH-010414.02	1/4/14	9:16	77.58	12.10	17.23
Enterprise Products	South Carlsbad CS	Solar	Centaur	T2	DH-010414.02	1/4/14	9:17	77.80	11.00	17.23
Enterprise Products	South Carlsbad CS	Solar	Centaur	T2	DH-010414.02	1/4/14	9:18	77.75	11.32	17.24
Enterprise Products	South Carlsbad CS	Solar	Centaur	T2	DH-010414.02	1/4/14	9:19	77.70	12.53	17.25
Enterprise Products	South Carlsbad CS	Solar	Centaur	T2	DH-010414.02	1/4/14	9:20	77.79	14.40	17.23
Enterprise Products	South Carlsbad CS	Solar	Centaur	T2	DH-010414.02	1/4/14	9:21	77.73	11.35	17.24
Enterprise Products	South Carlsbad CS	Solar	Centaur	T2	DH-010414.02	1/4/14	9:22	77.88	10.97	17.24
Enterprise Products	South Carlsbad CS	Solar	Centaur	T2	DH-010414.02	1/4/14	9:23	77.92	10.77	17.21
Enterprise Products	South Carlsbad CS	Solar	Centaur	T2	DH-010414.02	1/4/14	9:24	78.15	10.71	17.23
Enterprise Products	South Carlsbad CS	Solar	Centaur	T2	DH-010414.02	1/4/14	9:25	77.92	10.31	17.23
Enterprise Products	South Carlsbad CS	Solar	Centaur	T2	DH-010414.02	1/4/14	9:26	78.19	10.32	17.24
Enterprise Products	South Carlsbad CS	Solar	Centaur	T2	DH-010414.02	1/4/14	9:27	78.74	10.17	17.24
Enterprise Products	South Carlsbad CS	Solar	Centaur	T2	DH-010414.02	1/4/14	9:28	79.05	10.45	17.24
Enterprise Products	South Carlsbad CS	Solar	Centaur	T2	DH-010414.02	1/4/14	9:29	78.60	10.36	17.24
Enterprise Products	South Carlsbad CS	Solar	Centaur	T2	DH-010414.02	1/4/14	9:30	78.49	10.61	17.25
Enterprise Products	South Carlsbad CS	Solar	Centaur	T2	DH-010414.02	1/4/14	9:31	78.74	10.00	17.24
Enterprise Products	South Carlsbad CS	Solar	Centaur	T2	DH-010414.02	1/4/14	9:32	78.91	10.30	17.25
Enterprise Products	South Carlsbad CS	Solar	Centaur	T2	DH-010414.02	1/4/14	9:33	78.91	11.49	17.25
Enterprise Products	South Carlsbad CS	Solar	Centaur	T2	DH-010414.02	1/4/14	9:34	78.51	12.79	17.23

Company	Plant Name	Unit Make	Unit Model	Unit Number	Status	Date	Time	NOx (ppmvd)	CO (ppmvd)	O2 (%, dry)
Enterprise Products	South Carlsbad CS	Solar	Centaur	T2	DH-010414.02	1/4/14	9:35	78.71	11.39	17.26
Enterprise Products	South Carlsbad CS	Solar	Centaur	T2	DH-010414.02	1/4/14	9:36	78.28	10.84	17.21
Enterprise Products	South Carlsbad CS	Solar	Centaur	T2	DH-010414.02	1/4/14	9:37	78.48	10.99	17.24
Enterprise Products	South Carlsbad CS	Solar	Centaur	T2	DH-010414.02	1/4/14	9:38	78.47	12.85	17.25
Enterprise Products	South Carlsbad CS	Solar	Centaur	T2	DH-010414.02	1/4/14	9:39	77.72	14.62	17.24
Enterprise Products	South Carlsbad CS	Solar	Centaur	T2	DH-010414.02	1/4/14	9:40	77.63	13.37	17.24
					DH-010414.02 Averages			**78.07**	**11.51**	**17.23**
Enterprise Products	South Carlsbad CS	Solar	Centaur			1/4/14	9:41	61.99	16.81	21.18
Enterprise Products	South Carlsbad CS	Solar	Centaur	Bias Check	0NOx/20.92O2	1/4/14	9:42	2.50	-1.50	21.25
Enterprise Products	South Carlsbad CS	Solar	Centaur			1/4/14	9:43	21.31	58.04	1.49
Enterprise Products	South Carlsbad CS	Solar	Centaur	Bias Check	94.7NOx/0O2	1/4/14	9:44	91.54	190.52	0.34
Enterprise Products	South Carlsbad CS	Solar	Centaur			1/4/14	9:45	86.46	73.20	17.17
Enterprise Products	South Carlsbad CS	Solar	Centaur			1/4/14	9:46	78.59	12.03	17.24
Enterprise Products	South Carlsbad CS	Solar	Centaur	T2	DH-010414.03	1/4/14	9:47	79.11	10.31	17.26
Enterprise Products	South Carlsbad CS	Solar	Centaur	T2	DH-010414.03	1/4/14	9:48	79.25	11.30	17.27
Enterprise Products	South Carlsbad CS	Solar	Centaur	T2	DH-010414.03	1/4/14	9:49	79.52	9.92	17.26
Enterprise Products	South Carlsbad CS	Solar	Centaur	T2	DH-010414.03	1/4/14	9:50	79.99	9.71	17.24
Enterprise Products	South Carlsbad CS	Solar	Centaur	T2	DH-010414.03	1/4/14	9:51	80.48	9.48	17.26
Enterprise Products	South Carlsbad CS	Solar	Centaur	T2	DH-010414.03	1/4/14	9:52	80.27	9.44	17.24
Enterprise Products	South Carlsbad CS	Solar	Centaur	T2	DH-010414.03	1/4/14	9:53	80.31	9.91	17.26
Enterprise Products	South Carlsbad CS	Solar	Centaur	T2	DH-010414.03	1/4/14	9:54	80.31	10.72	17.25
Enterprise Products	South Carlsbad CS	Solar	Centaur	T2	DH-010414.03	1/4/14	9:55	80.18	9.00	17.25
Enterprise Products	South Carlsbad CS	Solar	Centaur	T2	DH-010414.03	1/4/14	9:56	80.76	10.20	17.27
Enterprise Products	South Carlsbad CS	Solar	Centaur	T2	DH-010414.03	1/4/14	9:57	81.01	16.00	17.28
Enterprise Products	South Carlsbad CS	Solar	Centaur	T2	DH-010414.03	1/4/14	9:58	81.36	11.69	17.26
Enterprise Products	South Carlsbad CS	Solar	Centaur	T2	DH-010414.03	1/4/14	9:59	82.09	16.89	17.28
Enterprise Products	South Carlsbad CS	Solar	Centaur	T2	DH-010414.03	1/4/14	10:00	82.44	11.24	17.28
Enterprise Products	South Carlsbad CS	Solar	Centaur	T2	DH-010414.03	1/4/14	10:01	82.25	10.23	17.26
Enterprise Products	South Carlsbad CS	Solar	Centaur	T2	DH-010414.03	1/4/14	10:02	82.07	10.78	17.24
Enterprise Products	South Carlsbad CS	Solar	Centaur	T2	DH-010414.03	1/4/14	10:03	82.19	10.41	17.26
Enterprise Products	South Carlsbad CS	Solar	Centaur	T2	DH-010414.03	1/4/14	10:04	82.13	9.73	17.27
Enterprise Products	South Carlsbad CS	Solar	Centaur	T2	DH-010414.03	1/4/14	10:05	82.25	10.93	17.25
Enterprise Products	South Carlsbad CS	Solar	Centaur	T2	DH-010414.03	1/4/14	10:06	82.14	10.30	17.27
Enterprise Products	South Carlsbad CS	Solar	Centaur	T2	DH-010414.03	1/4/14	10:07	82.23	9.32	17.27
Enterprise Products	South Carlsbad CS	Solar	Centaur	T2	DH-010414.03	1/4/14	10:08	82.22	9.21	17.28
Enterprise Products	South Carlsbad CS	Solar	Centaur	T2	DH-010414.03	1/4/14	10:09	81.95	11.52	17.27
Enterprise Products	South Carlsbad CS	Solar	Centaur	T2	DH-010414.03	1/4/14	10:10	82.35	9.54	17.29
Enterprise Products	South Carlsbad CS	Solar	Centaur	T2	DH-010414.03	1/4/14	10:11	82.21	10.07	17.29
Enterprise Products	South Carlsbad CS	Solar	Centaur	T2	DH-010414.03	1/4/14	10:12	82.23	9.75	17.28
Enterprise Products	South Carlsbad CS	Solar	Centaur	T2	DH-010414.03	1/4/14	10:13	82.22	9.70	17.28
Enterprise Products	South Carlsbad CS	Solar	Centaur	T2	DH-010414.03	1/4/14	10:14	82.17	9.18	17.27
Enterprise Products	South Carlsbad CS	Solar	Centaur	T2	DH-010414.03	1/4/14	10:15	82.24	9.96	17.29
Enterprise Products	South Carlsbad CS	Solar	Centaur	T2	DH-010414.03	1/4/14	10:16	82.21	9.92	17.28
Enterprise Products	South Carlsbad CS	Solar	Centaur	T2	DH-010414.03	1/4/14	10:17	82.23	9.58	17.29
					DH-010414.03 Averages			**81.34**	**10.56**	**17.27**
Enterprise Products	South Carlsbad CS	Solar	Centaur			1/4/14	10:18	49.14	12.33	21.26
Enterprise Products	South Carlsbad CS	Solar	Centaur	Bias Check	0NOx/20.92O2	1/4/14	10:19	2.11	-2.63	21.30
Enterprise Products	South Carlsbad CS	Solar	Centaur			1/4/14	10:20	38.80	116.05	0.41
Enterprise Products	South Carlsbad CS	Solar	Centaur	Bias Check	94.7NOx/0O2	1/4/14	10:21	91.12	189.62	0.36
Enterprise Products	South Carlsbad CS	Solar	Centaur			1/4/14	10:22	86.39	62.81	17.20
Enterprise Products	South Carlsbad CS	Solar	Centaur			1/4/14	16:04	40.92	1.54	0.08
Enterprise Products	South Carlsbad CS	Solar	Centaur	RT	NO2	1/4/14	16:05	41.03	1.46	0.09
Enterprise Products	South Carlsbad CS	Solar	Centaur			1/4/14	16:06	19.78	1.46	0.08
Enterprise Products	South Carlsbad CS	Solar	Centaur			1/4/14	16:07	-2.28	0.24	0.01

New Mexico Environment Department
525 Camino de los Marquez, Suite 1
Santa Fe, NM 87505
Phone (505) 476-4300 Fax (505) 476-4375

Version 1/1/2010

NMED USE ONLY	
DTS	
TEMPO	

UNIVERSAL STACK TEST NOTIFICATION, PROTOCOL AND REPORT FORM

NMED USE ONLY	
Staff	
Admin	

Submit to: Stacktest.aqb@state.nm.us

I. DATABASE HEADER INFORMATION (drop down menus in bold)

a. AI#		
218	**Test Report**	**Periodic Test (Portable Analyzer)**

d. Company Name:	e. Facility Name:
Enterprise Field Services LLC	**South Carlsbad Compressor Station**
f. Emission Unit Numbers:	g. Emission Unit Description (boiler, Waukesha 7042, etc)
1, 2	**Turbines, Solar Centaur T-4702**

h. Reports - Tracking Number from notification response:	i. Proposed Test Date:	j. Actual test date:
CMT	**Week of 1/19/15**	**1/20/2015**

k. Reason for test (name permit requirement, NSPS, MACT, consent decree, etc. Indicate here is this notification is a revised test date only)

Annual performance test of existing turbines pursuant to NSR condition A205C.

II. GENERAL COMPANY AND FACILITY INFORMATION

a.Company Address:			k.. Facility Address:		
PO Box 4324			**Roberson Road, Eddy County**		
b. City:	c. State:	d. Zip:	l. City:	m. State:	n. Zip:
Houston	**TX**	**77210⊥**	**Loving**	**NM**	**88526**
e. Environmental Contact:	f. Title:		o. Facility Contact:	p. Title:	
Dina Babinski	**ENV Supervisor**		**Thomas Green**	**Area Supervisor**	
g. Phone Number:	h. Cell Number:		q. Phone Number:	r. Cell Number:	
210-528-3824	**210-232-4880**		**575-885-7235**	**575-708-0015**	
i. Email Address:			s. Email Address:		
djbabinski@eprod.com			**tdgreen@eprod.com**		
j. Title V Permit Number:			t. NSR Permit Number:		
P-130-R2			**NSR 220M8-R1**		

u. Detailed driving directions from nearest New Mexico town:

From Loving, UN285 north to Roberson Road west, Roberson Road west to station.

III. TESTING FIRM

a. Company:	g. Contact:	
Compliance Services and Testing	**Chris Spencer**	
b. Address 1:	h. Title:	
7108 Washington NE Ste. A	**Director**	
c. Address 2:	i. Office Phone:	j. Cell Phone:
PO Box 94191-87199		**505-681-4909**

d. City:	e. State:	f. Zip:	k. Email Address:
Albuquerque	**NM**	**87109**	**cspencer@comptesting.com**

IV. EMISSION UNIT

a. Emission Unit Number:	b. Make & Model Number
1 and 2	**Solar Centaur T-4702**
c. Serial Number:	d. Permitted Capacity:
See section g.	**3609 hp**

e Exceptions: Explain if test is late, rescheduled, related to an enforcement action:

g. Emission Unit Description and brief process name or description:

Turbine 1 SN: OHD10C7915

Turbine 2 SN: OHE12C7057

Natural gas-fired turbines for natural gas compression.

h. Installation Date:	i. Startup Date:	k. Date Reached Max. Capacity:

l. Control Equipment Description as listed in permit (model, ser. # etc. if applicable):

NA

STACK PARAMETERS

m. Velocity (ft/sec):	**177**
n. Temperature (ºC):	**486**
o. Stack Diameter, D (in.):	**NA**
p. Distance to Stack Bends or Obstructions:	
Upstream, Distance A (in.):	**NA**
Downstream, Distance B (in.):	**NA**

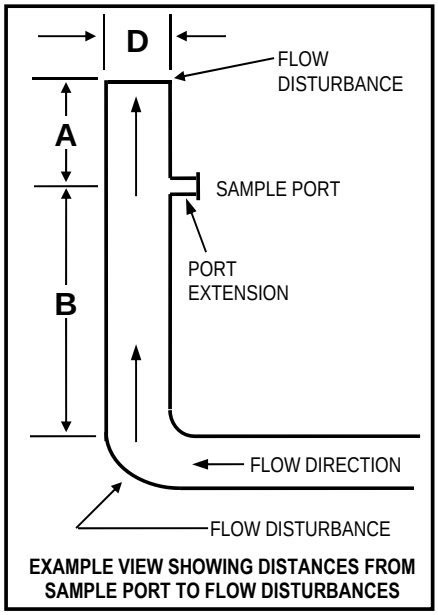

EXAMPLE VIEW SHOWING DISTANCES FROM SAMPLE PORT TO FLOW DISTURBANCES

Attach an explanation or drawing to explain any difficult or unusual stack geometry or parameters.

V. POLLUTANTS AND PROPOSED TEST METHODS

Pollutant or Parameter:		Proposed Test Methods (Deviations from approved methods require supporting documentation and prior authorization)	Deviation to Test Method Requested
☒	**Portable Analyzer Methods for NOx, CO, SO_2**		☐
☐	**NOx**	**EPA Method 7E**	☐
☐	**CO**	**EPA Method 10**	☐
☐	**SO2**	**EPA Method 6**	☐
☐	**VOCs**	**(Specify)**	☐
☐	**HAPs**	**(Specify)**	☐
☐	**PM (TSP)**	**EPA Method 5**	☐
☐	**PM10**	**EPA Method 201**	☐
☐	**PM2.5**	**(Specify)**	☐
☐	**Opacity**	**EPA Method 9**	☐
☐	**Visual E.**	**EPA Method 22**	☐
☐	**Stack Flow**	**EPA Methods 1 - 3**	☐
☐	**Moisture**	**EPA Method 4**	☐
☐	**Other**	**(Specify)**	☐
☐	**Other**	**(Specify)**	☐

List Specific VOC's and HAP's:

VI. PROPOSED TEST RUN AND TEST LOAD INFORMATION

a. Number of Test Runs:	b. Run Duration	c. Required by (regulation or permit number):	d. Specific Condition or Section:
3	**20 min**	**NSR 220 A205C**	**A205C**

PLEASE NOTE – Default run duration is 60 minutes, unless otherwise specified by an applicable regulation.

e. Expected Load:	f. Percent of Permitted Capacity:	g. Is this an opacity test?	h. If yes, no. of observation pts.:
>90%	**>90%**	**Yes** ☐ **No** ☒	

i. If expected load during test is less than 90% of capacity, explain**:**

NOTE – Failure to test at 90-100% of permitted load will limit unit operation to 110% of tested load until a new initial compliance test is conducted.

PLANT OR UNIT OPERATING PARAMETERS TO BE MONITORED

j. List and explain the plant operating parameters that will be monitored and applicable permit conditions or regulatory standards.

Fuel usage, compressor operating parameters, turbine operating parameters.

VII. ADDITIONAL DETAILS (where applicable)

RATA and INSTRUMENTAL ANALYZER CALIBRATION PROCEDURES

a. Do any of the methods you are proposing utilize instrumental analyzers (i.e.; EPA Methods 3A, 6C, 7E, 10, 18, 25/25A, 320 etc.)? If yes, briefly describe analyzer calibration procedures and/or calibration standard procedures. Enter the highest pollutant concentration expected and the proposed concentrations of calibration gases.	☒ Yes	☐ No

As described in the methods.

SAMPLING TRAIN LEAK CHECK PROCEDURES

b. Do any of the methods you are proposing utilize the EPA Method 5 sampling train (i.e.; EPA Methods 1-4, 5, 17, 26/26A, 29, etc.)? If yes, briefly describe sampling train and pitot tube leak check procedures:	☐ Yes	☒ No

EPA METHOD 19 IN LIEU OF EPA METHODS 1-4

c. Are you proposing to utilize EPA Method 19 in lieu of EPA Methods 1-4? If yes, explain why you believe this proposal is justified:	☒ Yes	☐ No

Method 19 with use of a calibrated fuel meter and current fuel gas analysis.

PLEASE NOTE – EPA Method 19 may be utilized in lieu of EPA Methods 1-4, subject to the approval of the Department. If you are proposing to utilize EPA Method 19 in lieu of EPA Methods 1-4, you MUST include a recent fuel gas heating value analysis as well as a recent fuel flow meter calibration certificate, preferably conducted on the day of the test, but no earlier than three months prior to the test date. If the analyses have been conducted prior to the test date, you MUST append the certificates to the protocol. If conducted on the day of the test, you MUST append the certificates to the final test report.

VIII. ATTACHMENTS (as needed to support proposed test; check all that apply)		
NOTIFICATION/PROTOCOL ATTACHMENTS		
☐	Road Map Indicating Directions from Nearest New Mexico Town to Facility	
☐	Schematic of process being tested showing emission points, sampling sites and stack cross-section	
☐	Copy of proposed test methods (except for those promulgated test methods found in 40 CFR 51, 60, 61 and 63)	
☐	Fuel Heating Value Analysis	
☐	Fuel Flow Meter Calibration Certificate	
☐	Other:	
☐	Other:	
TEST REPORT ATTACHMENTS		
☐	**Section 2. Tables of Results**	
☐	**Supporting Documents (Specify)**	
Retain Report Section 3 - Test Procedures, Data, Calculations, Appendices – 2 years NSR permits, 5 years TV		

IX. CERTIFICATION		
This document has been prepared under my supervision and is accurate and complete to the best of my knowledge. I understand that acceptance of this protocol does not waive the requirements of any permit or regulation. I understand that any procedural errors or omissions are the sole responsibility of the permit holder.		
Signature: Jon Fields	Print Name and Title: **Jon E. Fields, Director-Field Compliance**	Date: 2-18-2014
Responsible Official for Title V? ☐ Yes	☒ No (R.O signature not required for routine periodic testing)	

2015 COMPLIANCE TEST REPORT

ON

EXHAUST EMISSIONS

FROM TWO

SOLAR CENTAUR T-4702 CENTRIFUGAL INTERNAL COMBUSTION ENGINE

AT THE

SOUTH CARLSBAD COMPRESSOR STATION

NEAR

LOVING, NEW MEXICO

PREPARED FOR

ENTERPRISE FIELD SERVICES

JANUARY 2015

PROJECT NUMBER 1187

STATE OF NEW MEXICO ENVIRONMENT DEPARTMENT
AIR QUALITY BUREAU PERMIT NUMBER 0220-M8-R1

PREPARED BY

COMPLIANCE SERVICES & TESTING

COMPLIANCE SERVICES & TESTING

P.O. Box 94191-87199
7108 Washington St. NE
Suite A
Albuquerque, NM 87109
(505) 681-4909 Phone
www.comptesting.com

February 5, 2015

Dina Babinski
Enterprise Field Services
PO Box 4324
Houston, TX 77210

RE: Annual testing at the South Carlsbad Compressor Station.

Mrs. Babinski:

On January 20, 2015 CST performed annual emissions testing at the South Carlsbad Compressor Station to satisfy the requirements of the New Mexico Environment Department Air Quality Bureau Permit Number 0220-M8-R1. The unit is identified as follows:

Engine Information		
Unit Number	1	2
Engine Make	Solar	
Engine Model	Centaur T-4702	
Serial Number	OHD10-C-7915	OHE12-C-7057
Rated Horsepower	3609	
Rated Speed	15000	

The testing followed procedures found in the NMED "SOP for Using Portable Analyzers in Performance Testing." Mass emission rates were calculated using EPA Method 19 (combustion stoichiometry). The rates in terms of pounds per hour and tons per year were calculated using the oxygen F-factor (DSCFex/MMBtu), the fuel consumption rate (SCFH), the fuel higher heating value (Btu/SCF), and the pollutant concentration. Fuel consumption was monitored from a fuel meter. Three twenty-minute test runs were performed. The attached data sheet gives a detailed summary of the results of this test. Quality assurance data sheets are also attached. Strip charts are on file, and are available if needed.

Respectfully,



Jeremy Cahn
Compliance Services and Testing

Summary of Results
South Carlsbad Compressor Station, Unit #1

Company: Enterprise Field Services
Location: South Carlsbad Compressor Station
Source: Solar Centaur 40-T4702 SN: OHD10C7915
Engine Site Rating: 3609 Hp @ 15000 RPM
Technician: SR

Test Run Number	**1**	**2**	**3**	
EU Number	**1**	**1**	**1**	
Date	1/20/15	1/20/15	1/20/15	
Start Time	9:51	10:16	10:41	
Stop Time	10:11	10:36	11:01	
Engine/Compressor Operation				
Gas Producer Speed (%)	95.0	95.4	95.4	
Power Turbine Speed (%)	82.0	82.6	82.5	
Engine Horsepower (Hp)	3429	3443	3443	
Engine Compressor Discharge, PCD (psig)	101	102	102	
Fuel Valve Output (%)	58.7	59.3	59.4	
Suction Pressure (psig)	404	404	404	
Discharge Pressure (psig)	689	691	690	
Suction Temperature (°F)	130	132	133	
Discharge Temperature (°F)	167	172	173	
Air Inlet Temperature (T1) (°F)	61	64	65	
Average Exhaust Temperature (T5) (°F)	1104	1121	1126	
Compressor Throughput (MMCFD)	78.9	78.9	78.9	
Fuel Data				
Measured Fuel Consumption (MSCFD)	788.7	788.7	788.7	
Measured Fuel Consumption (SCFH)	32861	32861	32861	
O2 F-Factor (DSCF/MMBtu, HHV basis)	8697	8697	8697	
Fuel Heating Value (Btu/SCF, HHV)	1148	1148	1148	
BHp Specific Fuel Rate (Btu/Hp-hr, HHV basis)	9871	9871	9871	
Ambient Conditions				
Pressure Altitude (MSL)	3010	3010	3010	
Atmospheric Pressure ("Hg)	26.83	26.83	26.83	
Dry Bulb Temperature (°F)	60.3	62.4	63.7	
Wet Bulb Temperature (°F)	47.3	48.2	49.1	
Humidity (lb/lb air)	0.0046	0.0046	0.0048	
Measured Exhaust Emissions (Corrected)				**Average**
NOx (ppmv)	82.52	83.57	83.12	**83.07**
CO (ppmv)	16.45	15.56	15.41	**15.81**
O2 (vol %)	16.52	16.52	16.53	**16.52**
CO2 (vol %)	2.52	2.54	2.57	**2.54**
Moisture Content (% - from Method 4)	4.64	4.64	4.64	**4.64**
Fo (Natural Gas)	1.74	1.73	1.70	**1.72**
Exhaust Flow Rates (EPA Method 19 - Fuel Based)				
Dry SCFH (dry basis, calc. from Fuel Consumption)	1.57E+06	1.57E+06	1.57E+06	**1.57E+06**
Calculated Mass Emission Rates (EPA Methods 1-4)				
NOx (lbs/hr) **{Permit Limit = 27.0}**	15.43	15.63	15.58	**15.55**
CO (lbs/hr) **{Permit Limit = 7.4}**	1.87	1.77	1.76	**1.80**
NOx (tons/yr) **{Permit Limit = 118.3}**	67.60	68.46	68.24	**68.10**
CO (tons/yr) **{Permit Limit = 32.5}**	8.20	7.76	7.70	**7.89**

Summary of Results
South Carlsbad Compressor Station, Unit #2

Company: Enterprise Field Services
Location: South Carlsbad Compressor Station
Source: Solar Centaur 40-T4702 SN: OHE12C7057
Engine Site Rating: 3609 Hp @ 15000 RPM
Technician: SR

Test Run Number	**1**	**2**	**3**	
EU Number	**2**	**2**	**2**	
Date	1/20/15	1/20/15	1/20/15	
Start Time	8:29	8:54	9:19	
Stop Time	8:49	9:14	9:39	
Engine/Compressor Operation				
Gas Producer Speed (%)	94.8	94.7	94.8	
Power Turbine Speed (%)	84.1	83.7	83.6	
Engine Horsepower (Hp)	3421	3418	3421	
Engine Compressor Discharge, PCD (psig)	105	105	104	
Fuel Valve Output (%)	37.8	37.7	38.1	
Suction Pressure (psig)	237	238	238	
Discharge Pressure (psig)	416	414	413	
Suction Temperature (°F)	49	49	49	
Discharge Temperature (°F)	129	127	127	
Air Inlet Temperature (T1) (°F)	52	53	54	
Average Exhaust Temperature (T5) (°F)	1054	1056	1059	
Compressor Throughput (MMCFD)	80.6	80.6	80.6	
Fuel Data				
Measured Fuel Consumption (MSCFD)	788.7	788.7	788.7	
Measured Fuel Consumption (SCFH)	32861	32861	32861	
O2 F-Factor (DSCF/MMBtu, HHV basis)	8697	8697	8697	
Fuel Heating Value (Btu/SCF, HHV)	1148	1148	1148	
BHp Specific Fuel Rate (Btu/Hp-hr, HHV basis)	9871	9871	9871	
Ambient Conditions				
Pressure Altitude (MSL)	3000	3000	3010	
Atmospheric Pressure ("Hg)	26.84	26.84	26.83	
Dry Bulb Temperature (°F)	47.7	48.7	51.1	
Wet Bulb Temperature (°F)	40.6	41.7	43	
Humidity (lb/lb air)	0.0043	0.0045	0.0046	
Measured Exhaust Emissions (Corrected)				**Average**
NOx (ppmv)	81.07	83.33	84.59	**83.00**
CO (ppmv)	10.51	9.99	10.61	**10.37**
O2 (vol %)	16.71	16.71	16.73	**16.72**
CO2 (vol %)	2.41	2.41	2.45	**2.43**
Moisture Content (% - from Method 4)	4.64	4.64	4.64	**4.64**
Fo (Natural Gas)	1.74	1.74	1.70	**1.72**
Exhaust Flow Rates (EPA Method 19 - Fuel Based)				
Dry SCFH (dry basis, calc. from Fuel Consumption)	1.64E+06	1.64E+06	1.64E+06	**1.64E+06**
Calculated Mass Emission Rates (EPA Methods 1-4)				
NOx (lbs/hr) **{Permit Limit = 27.0}**	15.85	16.29	16.62	**16.25**
CO (lbs/hr) **{Permit Limit = 7.4}**	1.25	1.19	1.27	**1.24**
NOx (tons/yr) **{Permit Limit = 118.3}**	69.42	71.36	72.79	**71.19**
CO (tons/yr) **{Permit Limit = 32.5}**	5.48	5.21	5.56	**5.41**

Quality Assurance Report - Sample System #1
Converter Efficiency Test, Interference Test, Response Time and Bias Test, Mass Flow Controller Check, Pre and Post Leak Checks

NOx Converter Efficiency Check

Method: *7E Section 8.2.4*
Frequency: *Before each field test*
Criteria: *Equal to or greater than 90% conversion efficiency*

Test Date: 1/19/15 Technician: SR

NO2 / N2 Balance	*Results*
Certified Value	48.9 ppmv
Observed Value	47.1 ppmv
Converter Efficiency	96%

Interference Response Checks

Method: *7E Section 8.2.7*
Frequency: *Prior to initial use in the field or after major alteration or modification*
Criteria: *Sum of responses < 2.5 % of calibration span*

Test Date: 1/20/15 Technician: SR

Interference Test Gases		**Analyzer Response (ppmv or % as applicable)**					
Type Gas	*Conc.*	*NOx (ppmv)*	*CO (ppmv)*	*SO2 (ppmv)*	*THC (ppmv)*	*O2 (%)*	*CO2 (%)*
NOx in N2	50 ppm	---	N/A	---	---	0.00	0.01
CO in N2	50 ppm	N/A	---	---	---	0.00	0.01
O2 in N2	10.0%	0.23	-0.21	---	---	---	N/A
CO2 in N2	10.0%	0.23	-0.21	---	---	N/A	---
THC in air	---	---	---	---	---	---	---

Gas Dilution Calibration - 2 Mass Flow Controllers

Method: *205*
Frequency: *Before each field test.*
Criteria: *Produce Calibration gases whose measured values are within ± 2% of predicted values.*

Manufacturer: Environics Cal Gas: NOx
Model Number: Series 4040 Test Date: 1/19/15
Serial Number: 4456 Technician: SR

	MFC 3			**MFC 2**		
	Direct Inject	**Diluted Conc.**	**Diluted Conc.**	**Direct Inject**	**Diluted Conc.**	**Diluted Conc.**
Certified Value:	242	2957	2957	242	2957	2957
Ex. Dilution:	---	242	150	---	750	900
Injection 1	246	239	147	245	743	896
Injection 2	248	238	148	244	746	894
Injection 3	246	237	147	245	742	897
Average	**246.67**	**238.00**	**147.33**	**244.67**	**743.67**	**895.67**
% Variation	**0.47%**	**0.42%**	**0.39%**	**0.24%**	**0.28%**	**0.17%**
% Difference	**-1.91%**	**1.67%**	**1.79%**	**-1.10%**	**0.85%**	**0.48%**

Sample System Bias & Response Time Check

Method: *7E Section 8.2.5-6*
Frequency: *Before sampling begins*
Criteria: *5% of calibration span*
Criteria: *Note the longer of the two times as the response time*

Test Date: 1/20/15 Technician: SR

Sample System Bias Check

Introduction Technique	**NOx (ppmv)**	**CO (ppmv)**	**SO2 (ppmv)**	**THC (ppmv)**	**O2 (%)**	**CO2 (%)**
Direct Zero Input	0	0.0			0.0	0.0
Bias Input	-1	-0.3			0.0	0.1
Zero Bias	-0.4%	-0.3%			0.0%	1.0%
Direct Span Input	49.6	50.1			10.0	10.0
Bias Input	50.6	50.4			10.0	10.1
Span Bias	1.1%	0.3%			0.0%	1.0%

Sample System Response Time

Parameter	**NOx (ppmv)**	**CO (ppmv)**	**SO2 (ppmv)**	**THC (ppmv)**	**O2 (%)**	**CO2 (%)**
Upscale Response	35	45			50	55
Downscale Response	40	50			55	55
Purge Time	110 seconds					

Sample System Leak Check

Frequency: *Daily or whenever the sample system is moved or disassembled (CST SOP)*
Criteria: *Less than one inch decrease in pressure in one minute (CST SOP)*

Test Date				
1/20/15	Vacuum Initial:	0.0 inches	/ minute at	13 inches Hg
	Vacuum Final:	0.0 inches	/ minute at	13 inches Hg

Quality Assurance Worksheet
Instrument Calibration and Drift Correction

Company: Enterprise Field Services
Location: South Carlsbad Compressor Station
Source: Solar Centaur 40-T4702 SN: OHD10C7915
Engine Site Rating: 3609 Hp @ 15000 RPM
Test Date: Tuesday, January 20, 15

UNIT NUMBER 1					TEST RUN 1					TEST RUN 2					TEST RUN 3				
GAS LEVELS PER METHOD	CALIBRATION GAS CONCENTRATIONS		INITIAL CALIBRATION & LINEARITY CHECK		Start Run 9:51	ZERO and SPAN CALIBRATION CHECK				Start Run 10:16	ZERO and SPAN CALIBRATION CHECK				Start Run 10:41	ZERO and SPAN CALIBRATION CHECK			
	Certified Concentration	Target (% Span)	Analyzer Response	Calibration Error < 2%	Stop Run 10:11	Initial Response	Final Response	Drift < 3%	Bias < 5%	Stop Run 10:36	Initial Response	Final Response	Drift < 3%	Bias < 5%	Stop Run 11:01	Initial Response	Final Response	Drift < 3%	Bias < 5%
NOx					Avg. ppmv					Avg. ppmv					Avg. ppmv				
Zero	0.0 ppmv	0.0	-0.4 ppmv	-0.4%	82.00	-1.6 ppmv	-0.6 ppmv	1.1%	0.6%	83.00	-0.6 ppmv	-0.7 ppmv	0.1%	0.7%	83.00	-0.7 ppmv	0.8 ppmv	1.6%	0.8%
					Corr. ppmv					Corr. ppmv					Corr. ppmv				
Mid	50.0 ppmv	52.6	49.6 ppmv	-0.4%	82.52	49.3 ppmv	49.2 ppmv	0.2%	0.8%	83.57	49.2 ppmv	49.6 ppmv	0.8%	0.4%	83.12	49.6 ppmv	50.3 ppmv	1.4%	0.3%
High	95.0 ppmv	100.0	95.8 ppmv	0.8%	Cal. Span					Cal. Span					Cal. Span				
Analyzer Range = 100 ppmv			Span = 95.0		95					95					95				
CO					Avg. ppmv					Avg. ppmv					Avg. ppmv				
Zero	0.0 ppmv	0.0	0 ppmv	0.0%	15.00	-1.5 ppmv	-1.8 ppmv	0.3%	1.9%	14.00	-1.8 ppmv	-1.5 ppmv	0.3%	1.6%	14.00	-1.5 ppmv	-1.5 ppmv	0.0%	1.6%
					Corr. ppmv					Corr. ppmv					Corr. ppmv				
Mid	50.0 ppmv	52.6	50.1 ppmv	0.1%	16.45	49.3 ppmv	48.6 ppmv	1.4%	1.5%	15.56	48.6 ppmv	48.7 ppmv	0.2%	1.4%	15.41	48.7 ppmv	48.9 ppmv	0.4%	1.2%
High	95.0 ppmv	100.0	95.6 ppmv	0.6%	Cal. Span					Cal. Span					Cal. Span				
Analyzer Range = 100 ppmv			Span = 95.0		95					95					95				
O2					Avg.%					Avg.%					Avg.%				
Zero	0.0%	0.0	0.0%	0.0%	16.52	0.0%	0.0%	0.0%	0.0%	16.52	0.0%	0.0%	0.0%	0.0%	16.53	0.0%	0.0%	0.0%	0.0%
					Corr. %					Corr. %					Corr. %				
Mid	10.0%	47.6	10.0%	0.0%	16.52	10.0%	10.0%	0.0%	0.0%	16.52	10.0%	10.0%	0.0%	0.0%	16.53	10.0%	10.0%	0.0%	0.0%
High	21.0%	100.0	21.0%	0.0%	Cal. Span					Cal. Span					Cal. Span				
Analyzer Range = 22.0%			Span = 21.0		21					21					21				
CO2					Avg.%					Avg.%					Avg.%				
Zero	0.0%	0.0	0.0%	0.0%	2.79	0.3%	0.3%	0.0%	3.0%	2.81	0.3%	0.3%	0.0%	3.0%	2.83	0.3%	0.3%	0.0%	3.0%
					Corr. %					Corr. %					Corr. %				
Mid	5.0%	50.0	5.2%	2.0%	2.52					2.54					2.57				
High	10.0%	100.0	10.0%	0.0%	Cal. Span	10.2%	10.2%	0.0%	2.0%	Cal. Span	10.2%	10.2%	0.0%	2.0%	Cal. Span	10.2%	10.1%	1.0%	1.0%
Analyzer Range = 11.0%			Span = 10.0		10					10					10				

Quality Assurance Worksheet
Instrument Calibration and Drift Correction

Company: Enterprise Field Services
Location: South Carlsbad Compressor Station
Source: Solar Centaur 40-T4702 SN: OHE12C7057
Engine Site Rating: 3609 Hp @ 15000 RPM
Test Date: Tuesday, January 20, 15

UNIT NUMBER 2					TEST RUN 1					TEST RUN 2					TEST RUN 3				
GAS LEVELS PER METHOD	CALIBRATION GAS CONCENTRATIONS		INITIAL CALIBRATION & LINEARITY CHECK		Start Run 8:29	ZERO and SPAN CALIBRATION CHECK				Start Run 8:54	ZERO and SPAN CALIBRATION CHECK				Start Run 9:19	ZERO and SPAN CALIBRATION CHECK			
	Certified Concentration	Target (% Span)	Analyzer Response	Calibration Error < 2%	Stop Run 8:49	Initial Response	Final Response	Drift < 3%	Bias < 5%	Stop Run 9:14	Initial Response	Final Response	Drift < 3%	Bias < 5%	Stop Run 9:39	Initial Response	Final Response	Drift < 3%	Bias < 5%
NOx					Avg. ppmv					Avg. ppmv					Avg. ppmv				
Zero	0.0 ppmv	0.0	-0.4 ppmv	-0.4%	82.00	-0.8 ppmv	-0.9 ppmv	0.1%	0.9%	83.00	-0.9 ppmv	-0.6 ppmv	0.3%	0.6%	84.00	-0.6 ppmv	-1.6 ppmv	1.1%	1.7%
					Corr. ppmv					Corr. ppmv					Corr. ppmv				
Mid	50.0 ppmv	52.6	49.6 ppmv	-0.4%	81.07	50.6 ppmv	49.9 ppmv	1.4%	0.1%	83.33	49.9 ppmv	49.1 ppmv	1.6%	0.9%	84.59	49.1 ppmv	49.3 ppmv	0.4%	0.7%
High	95.0 ppmv	100.0	95.8 ppmv	0.8%	Cal. Span					Cal. Span					Cal. Span				
Analyzer Range = 100 ppmv			Span = 95.0		95					95					95				
CO					Avg. ppmv					Avg. ppmv					Avg. ppmv				
Zero	0.0 ppmv	0.0	0 ppmv	0.0%	10.00	-0.3 ppmv	-1.1 ppmv	0.8%	1.2%	9.00	-1.1 ppmv	-1.3 ppmv	0.2%	1.4%	9.40	-1.3 ppmv	-1.5 ppmv	0.2%	1.6%
					Corr. ppmv					Corr. ppmv					Corr. ppmv				
Mid	50.0 ppmv	52.6	50.1 ppmv	0.1%	10.51	50.4 ppmv	50.0 ppmv	0.8%	0.0%	9.99	50.0 ppmv	49.7 ppmv	0.6%	0.3%	10.61	49.7 ppmv	49.3 ppmv	0.8%	0.7%
High	95.0 ppmv	100.0	95.6 ppmv	0.6%	Cal. Span					Cal. Span					Cal. Span				
Analyzer Range = 100 ppmv			Span = 95.0		95					95					95				
O2					Avg.%					Avg.%					Avg.%				
Zero	0.0%	0.0	0.0%	0.0%	16.71	0.0%	0.0%	0.0%	0.0%	16.71	0.0%	0.0%	0.0%	0.0%	16.73	0.0%	0.0%	0.0%	0.0%
					Corr. %					Corr. %					Corr. %				
Mid	10.0%	47.6	10.0%	0.0%	16.71	10.0%	10.0%	0.0%	0.0%	16.71	10.0%	10.0%	0.0%	0.0%	16.73	10.0%	10.0%	0.0%	0.0%
High	21.0%	100.0	21.0%	0.0%	Cal. Span					Cal. Span					Cal. Span				
Analyzer Range = 22.0%			Span = 21.0		21					21					21				
CO2					Avg.%					Avg.%					Avg.%				
Zero	0.0%	0.0	0.0%	0.0%	2.56	0.1%	0.2%	1.0%	2.0%	2.65	0.2%	0.3%	1.0%	3.0%	2.73	0.3%	0.3%	0.0%	3.0%
					Corr. %					Corr. %					Corr. %				
Mid	5.0%	50.0	5.2%	2.0%	2.41					2.41					2.45				
High	10.0%	100.0	10.0%	0.0%	Cal. Span	10.1%	10.2%	1.0%	2.0%	Cal. Span	10.2%	10.2%	0.0%	2.0%	Cal. Span	10.2%	10.2%	0.0%	2.0%
Analyzer Range = 11.0%			Span = 10.0		10					10					10				

CMS3R125

CORPORATE MEASUREMENT SYSTEM

Gas Quality Report - Detail

Prod date: 01/2015 thru 02/2015

Request: Meter: 16961

Report Date: 01/29/2015 14:58

Meter Number: 16961 01 **Production month:** 01/2015 **Sample Type:** Hourly Chrom

Gas Quality Source: 1696101 SO CARLSBAD TURB FUEL **Gpa Version:** 2145-09

Date/Time	Btu	Gravity	Co2	N2	C1 Methane	C2 Ethane	C3 Propane	IC4 Iso Butane	NC4 Butane	IC5 Iso Pntn	NC5 Pntn	NeoC5 Neo Pntn	C6 Plus	H2s	Hydrogen	Oxygen	Helium	Argon	Carbon Monoxide
01 07:00	1136.1	0.6631	0.0010	2.8563	83.6352	8.7108	3.5983	0.3324	0.6696	0.0887	0.0739	0.0000	0.0338	0.0000	0.0000	0.0000	0.0000	0.0000	0.0000
02 07:00	1131.9	0.6623	0.0000	3.0501	83.5036	8.7941	3.5326	0.3155	0.6255	0.0818	0.0673	0.0000	0.0295	0.0000	0.0000	0.0000	0.0000	0.0000	0.0000
03 07:00	1144.6	0.6699	0.0005	2.9842	82.6472	9.2540	3.8378	0.3545	0.7048	0.0964	0.0819	0.0000	0.0387	0.0000	0.0000	0.0000	0.0000	0.0000	0.0000
04 07:00	1147.0	0.6710	0.0007	2.9347	82.6754	9.1282	3.9093	0.3730	0.7572	0.1013	0.0839	0.0000	0.0363	0.0000	0.0000	0.0000	0.0000	0.0000	0.0000
05 07:00	1137.1	0.6715	0.1691	2.7855	83.1382	8.9093	3.7070	0.3526	0.7133	0.1012	0.0859	0.0000	0.0379	0.0000	0.0000	0.0000	0.0000	0.0000	0.0000
06 07:00	1145.9	0.6678	0.0001	2.7198	83.0808	9.1256	3.7825	0.3571	0.7129	0.0977	0.0831	0.0000	0.0404	0.0000	0.0000	0.0000	0.0000	0.0000	0.0000
07 07:00	1143.7	0.6680	0.0000	2.8722	82.8418	9.3017	3.7556	0.3455	0.6793	0.0918	0.0759	0.0000	0.0362	0.0000	0.0000	0.0000	0.0000	0.0000	0.0000
08 07:00	1145.5	0.6701	0.0000	2.9626	82.5880	9.3120	3.8738	0.3561	0.7034	0.0917	0.0759	0.0000	0.0365	0.0000	0.0000	0.0000	0.0000	0.0000	0.0000
09 07:00	1150.8	0.6718	0.0007	2.7886	82.4602	9.4905	3.9595	0.3627	0.7254	0.0950	0.0789	0.0000	0.0385	0.0000	0.0000	0.0000	0.0000	0.0000	0.0000
10 07:00	1149.5	0.6724	0.0007	2.9273	82.3088	9.4880	3.9740	0.3640	0.7325	0.0924	0.0766	0.0000	0.0357	0.0000	0.0000	0.0000	0.0000	0.0000	0.0000
11 07:00	1149.0	0.6750	0.1284	2.9126	82.0913	9.5789	3.9495	0.3732	0.7553	0.0963	0.0788	0.0000	0.0357	0.0000	0.0000	0.0000	0.0000	0.0000	0.0000
12 07:00	1144.4	0.6781	0.4807	3.0357	81.5945	9.6236	3.9708	0.3597	0.7277	0.0938	0.0772	0.0000	0.0363	0.0000	0.0000	0.0000	0.0000	0.0000	0.0000
13 07:00	1147.9	0.6768	0.2911	2.9947	81.6992	9.7065	4.0125	0.3615	0.7320	0.0929	0.0757	0.0000	0.0339	0.0000	0.0000	0.0000	0.0000	0.0000	0.0000
14 07:00	1148.3	0.6770	0.3226	2.9553	81.6891	9.7146	4.0303	0.3580	0.7251	0.0927	0.0766	0.0000	0.0357	0.0000	0.0000	0.0000	0.0000	0.0000	0.0000
15 07:00	1144.8	0.6764	0.3676	3.0413	81.7852	9.5369	3.9848	0.3579	0.7222	0.0938	0.0766	0.0000	0.0337	0.0000	0.0000	0.0000	0.0000	0.0000	0.0000
16 07:00	1146.7	0.6761	0.3418	2.9360	81.8389	9.6164	3.9933	0.3578	0.7135	0.0924	0.0757	0.0000	0.0342	0.0000	0.0000	0.0000	0.0000	0.0000	0.0000
17 07:00	1147.6	0.6768	0.3276	2.9696	81.6666	9.7419	4.0432	0.3548	0.6993	0.0905	0.0742	0.0000	0.0323	0.0000	0.0000	0.0000	0.0000	0.0000	0.0000
18 07:00	1147.0	0.6753	0.3235	2.8677	81.9681	9.5738	4.0126	0.3541	0.6991	0.0917	0.0759	0.0000	0.0335	0.0000	0.0000	0.0000	0.0000	0.0000	0.0000
19 07:00	1145.5	0.6751	0.3013	2.9786	81.8912	9.6138	3.9732	0.3507	0.6937	0.0898	0.0743	0.0000	0.0334	0.0000	0.0000	0.0000	0.0000	0.0000	0.0000
20 07:00	1145.7	0.6746	0.3163	2.8955	81.9762	9.6418	3.9297	0.3515	0.6939	0.0885	0.0729	0.0000	0.0337	0.0000	0.0000	0.0000	0.0000	0.0000	0.0000
21 07:00	1146.7	0.6732	0.2871	2.7472	82.3412	9.4139	3.9329	0.3620	0.7168	0.0908	0.0745	0.0000	0.0336	0.0000	0.0000	0.0000	0.0000	0.0000	0.0000
22 07:00	1144.0	0.6735	0.3042	2.9108	82.1824	9.4289	3.9351	0.3518	0.6991	0.0857	0.0706	0.0000	0.0314	0.0000	0.0000	0.0000	0.0000	0.0000	0.0000
23 07:00	1143.6	0.6744	0.3243	2.9862	82.0282	9.4913	3.9240	0.3490	0.7001	0.0882	0.0746	0.0000	0.0341	0.0000	0.0000	0.0000	0.0000	0.0000	0.0000
24 07:00	1143.9	0.6717	0.2962	2.7363	82.5729	9.2893	3.8392	0.3561	0.7125	0.0889	0.0742	0.0000	0.0344	0.0000	0.0000	0.0000	0.0000	0.0000	0.0000
25 07:00	1139.9	0.6721	0.2491	2.9321	82.5773	9.1645	3.8167	0.3529	0.7087	0.0894	0.0743	0.0000	0.0350	0.0000	0.0000	0.0000	0.0000	0.0000	0.0000
26 07:00	1140.0	0.6725	0.4310	2.8624	82.4850	9.1263	3.8349	0.3525	0.7065	0.0909	0.0749	0.0000	0.0356	0.0000	0.0000	0.0000	0.0000	0.0000	0.0000
27 07:00	1142.3	0.6734	0.3694	2.9020	82.3455	9.1996	3.8931	0.3606	0.7254	0.0942	0.0771	0.0000	0.0331	0.0000	0.0000	0.0000	0.0000	0.0000	0.0000
28 07:00	1141.0	0.6745	0.4682	2.9293	82.1582	9.3125	3.8447	0.3595	0.7259	0.0930	0.0760	0.0000	0.0327	0.0000	0.0000	0.0000	0.0000	0.0000	0.0000
Average:	1144.3	0.6727	0.2180	2.9098	82.3489	9.3675	3.8875	0.3549	0.7100	0.0922	0.0763	0.0000	0.0348	0.0000	0.0000	0.0000	0.0000	0.0000	0.0000
AVG GPM:						2.5046	1.0707	0.1161	0.2238	0.0337	0.0277	0.0000	0.0156		**TOTAL AVG GPM:**		3.9921		

Fuel Gas Analysis
Diluent F Factors, Higher Heating Value Calculation, Predicted Fo, Fuel VOC Content

Company: Enterprise
Sample ID: South Carlsbad Turbine Fuel
Time: N/A
Date: 1/20/15

CALCULATION OF DENSITY AND HEATING VALUE @ 68°F and 29.92 in Hg

Component	% Volume	Molecular Wt.	Density (lb/ft3)	% volume x Density	weight %	Component Gross Btu/lb	Weight Fract. Btu	Gross Htng. Val. (Btu/SCF)	Volume Fract. Btu
Hydrogen		2.016	0.0052	0.00000	0.0000	61100	0.00	325.0	0.000
Oxygen		32.000	0.0831	0.00000	0.0000	0	0.00	0.0	0.000
Nitrogen	2.8955	28.016	0.0731	0.00212	4.1617	0	0.00	0.0	0.000
CO2	0.3163	44.010	0.1149	0.00036	0.7149	0	0.00	0.0	0.000
CO		28.010	0.0727	0.00000	0.0000	4347	0.00	322.0	0.000
Methane	81.9762	16.041	0.0417	0.03414	67.1515	23879	16035.10	1013.0	830.419
Ethane	9.6418	30.067	0.0789	0.00760	14.9562	22320	3338.23	1792.0	172.781
Ethylene		28.051	0.0733	0.00000	0.0000	21644	0.00	1614.0	0.000
Propane	3.9297	44.092	0.1175	0.00462	9.0790	21661	1966.61	2590.0	101.779
propylene		42.077	0.1090	0.00000	0.0000	21041	0.00	2336.0	0.000
Isobutane	0.3515	58.118	0.1554	0.00055	1.0742	21308	228.90	3363.0	11.821
n-butane	0.6939	58.118	0.1554	0.00108	2.1207	21257	450.79	3370.0	23.384
Isobutene		56.102	0.1454	0.00000	0.0000	20840	0.00	3068.0	0.000
Isopentane	0.0885	72.144	0.1870	0.00017	0.3255	21091	68.66	4008.0	3.547
n-pentane	0.0729	72.144	0.1870	0.00014	0.2681	21052	56.45	4016.0	2.928
n-hexane +	0.0337	86.169	0.2234	0.00008	0.1480	20940	31.00	4762.0	1.605
H2S		34.076	0.0895	0.00000	0.0000	7100	0.00	647.0	0.000
Totals	**100.00**	**731.25**	**1.91**	**0.0508**	**100.00**	**Gross Heating Value**			
Total Density:		**0.0508**	**Specific Gravity:**		**0.665**	**Btu/lb:**	**22176**	**Btu/SCF:**	**1148**

CALCULATION OF F FACTORS

Component	Mol. Wt.	C Factor	H Factor	% volume	Fract. Wt.	Weight Percents				
						Carbon	Hydrogen	Nitrogen	Oxygen	Sulfur
Hydrogen	2.016	0.0000	1.0000	0.0000	0.0000		0.0000			
Oxygen	32.000	0.0000	0.0000	0.0000	0.0000				0.0000	
Nitrogen	28.016	0.0000	0.0000	2.8955	81.1203			4.1632		
CO2	44.010	0.2723	0.0000	0.3163	13.9204	0.1945			0.5194	
CO	28.010	0.4259	0.0000	0.0000	0.0000	0.0000			0.0000	
Methane	16.041	0.7500	0.2500	81.9762	1314.9802	50.6153	16.8718			
Ethane	30.067	0.8000	0.2000	9.6418	289.9000	11.9025	2.9756			
Ethylene	28.051	0.8571	0.1429	0.0000	0.0000	0.0000	0.0000			
Propane	44.092	0.8182	0.1818	3.9297	173.2683	7.2756	1.6168			
Propene	42.077	0.8571	0.1429	0.0000	0.0000	0.0000	0.0000			
Isobutane	58.118	0.8276	0.1725	0.3515	20.4285	0.8677	0.1808			
n-butane	58.118	0.8276	0.1725	0.6939	40.3281	1.7129	0.3570			
Isobutene	56.102	0.8571	0.1429	0.0000	0.0000	0.0000	0.0000			
Isopentane	72.144	0.8333	0.1667	0.0885	6.3847	0.2731	0.0546			
n-pentane	72.144	0.8333	0.1667	0.0729	5.2593	0.2249	0.0450			
n-hexane	86.169	0.8372	0.1628	0.0337	2.9039	0.1248	0.0243			
H2S	34.076	0.0000	0.0587	0.0000	0.0000	0.0000	0.0000			0.0000
Totals	**731.25**	**9.80**	**2.96**	**100.00**	**1948.494**	**73.191**	**22.126**	**4.163**	**0.519**	**0.000**

CALCULATED VALUES

O2 F Factor (dry)	**8697**	DSCF of Exhaust/MMBtu of Fuel Burned @ 0% excess air
O2 F Factor (wet)	**10623**	SCF of Exhaust/MMBtu of Fuel Burned @ 0% excess air
Moisture F Factor	**1926**	SCF of Water/MMBtu of Fuel Burned @ 0% excess air
Combust. Moisture	**18.13**	Volume % water in flue gas @ 0% excess air
CO2 F Factor	**1059**	DSCF of CO2/MMBtu of Fuel Burned @ 0% excess air
Carbon Dioxide	**12.18**	Volume % CO2 in flue gas @ 0% O2
Predicted Fo Factor	**1.72**	EPA Method 3b Fo value
Fuel VOC %	**29.17%**	Non-methane
Fuel VOC %	**13.56%**	Non-methane, non-ethane

Nolan, Shiver

From: Nolan, Shiver
Sent: Tuesday, February 09, 2016 8:30 AM
To: 'stacktest.aqb@state.nm.us'
Cc: Ferguson, Dina; Polk, Alena (ampolk@eprod.com)
Subject: South Carlsbad Eng 1 & 2 Solar Centaur T-4702
Attachments: 201601 South Carlsbad Annual Test Report.pdf - Adobe Acrobat Pro.pdf

Attached are the two stack test referenced above. Contact Information has been included on the NMED forms.

Shiver Nolan
Sr. Compliance Administrator

New Mexico Environment Department
525 Camino de los Marquez, Suite 1
Santa Fe, NM 87505
Phone (505) 476-4300 Fax (505) 476-4375

Version 1/1/2010

NMED USE ONLY	
DTS	
TEMPO	

UNIVERSAL STACK TEST NOTIFICATION, PROTOCOL AND REPORT FORM

NMED USE ONLY	
Staff	
Admin	

Submit to: Stacktest.aqb@state.nm.us

I. DATABASE HEADER INFORMATION (drop down menus in bold)

a. AI#		
218	**Test Report**	**Periodic Test (Portable Analyzer)**

d. Company Name:	e. Facility Name:
Enterprise Field Services LLC	**South Carlsbad Compressor Station**
f. Emission Unit Numbers:	g. Emission Unit Description (boiler, Waukesha 7042, etc)
1, 2	**Turbines, Solar Centaur T-4702**

h. Reports - Tracking Number from notification response:	i. Proposed Test Date:	j. Actual test date:
CMT	**Week of 1/18/16**	**1/20/16**

k. Reason for test (name permit requirement, NSPS, MACT, consent decree, etc. Indicate here is this notification is a revised test date only)

Annual performance test of existing turbines pursuant to NSR condition A205C.

II. GENERAL COMPANY AND FACILITY INFORMATION

a.Company Address:			k.. Facility Address:		
PO Box 4324			**Roberson Road, Eddy County**		
b. City:	c. State:	d. Zip:	l. City:	m. State:	n. Zip:
Houston	**TX**	**77210**	**Loving**	**NM**	**88526**
e. Environmental Contact:	f. Title:		o. Facility Contact:	p. Title:	
Alena Polk	**Sr. Env. Engineer**		**Thomas Green**	**Area Supervisor**	
g. Phone Number:	h. Cell Number:		q. Phone Number:	r. Cell Number:	
575-706-4926	**575-706-4926**		**575-885-7235**	**575-708-0015**	
i. Email Address:			s. Email Address:		
ampolk@eprod.com			**tdgreen@eprod.com**		
j. Title V Permit Number:			t. NSR Permit Number:		
P-130-M1R2			**NSR 220M9**		

u. Detailed driving directions from nearest New Mexico town:

From Loving, UN285 north to Roberson Road west, Roberson Road west to station.

III. TESTING FIRM

a. Company:	g. Contact:	
Compliance Services and Testing	**Chris Spencer**	
b. Address 1:	h. Title:	
7108 Washington NE Ste. A	**Director**	
c. Address 2:	i. Office Phone:	j. Cell Phone:
PO Box 94191-87199		**505-681-4909**

d. City:	e. State:	f. Zip:	k. Email Address:
Albuquerque	**NM**	**87109**	**cspencer@comptesting.com**

IV. EMISSION UNIT		**STACK PARAMETERS**	
a. Emission Unit Number: **1 and 2**	b. Make & Model Number **Solar Centaur T-4702**	m. Velocity (ft/sec):	**177**
		n. Temperature (ºC):	**486**
c. Serial Number: **See section g.**	d. Permitted Capacity: **3609 hp**	o. Stack Diameter, D (in.):	**NA**
		p. Distance to Stack Bends or Obstructions:	
e Exceptions: Explain if test is late, rescheduled, related to an enforcement action:		Upstream, Distance A (in.):	**NA**
		Downstream, Distance B (in.):	**NA**
g. Emission Unit Description and brief process name or description: **Turbine 1 SN: OHD10C795 Turbine 2 SN: OHE12C7057 Natural gas-fired turbines for natural gas compression.**		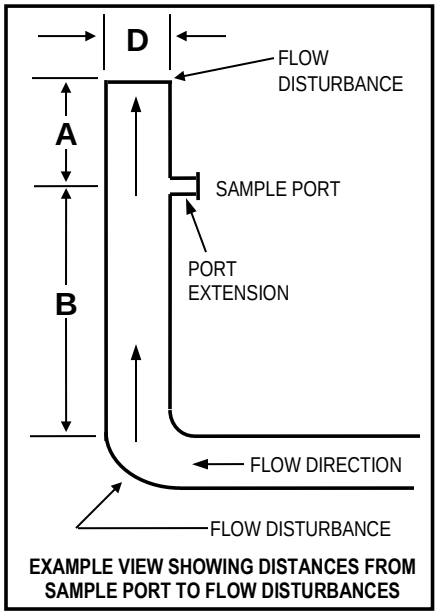 **EXAMPLE VIEW SHOWING DISTANCES FROM SAMPLE PORT TO FLOW DISTURBANCES**	
h. Installation Date:	i. Startup Date: / k. Date Reached Max. Capacity:	**Attach an explanation or drawing to explain any difficult or unusual stack geometry or parameters.**	
l. Control Equipment Description as listed in permit (model, ser. # etc. if applicable): **NA**			

V. POLLUTANTS AND PROPOSED TEST METHODS			
Pollutant or Parameter:		Proposed Test Methods (Deviations from approved methods require supporting documentation and prior authorization)	Deviation to Test Method Requested
☒	**Portable Analyzer Methods for NOx, CO, SO_2**		☐
☐	**NOx**	**EPA Method 7E**	☐
☐	**CO**	**EPA Method 10**	☐
☐	**SO2**	**EPA Method 6**	☐
☐	**VOCs**	**(Specify)**	☐
☐	**HAPs**	**(Specify)**	☐
☐	**PM (TSP)**	**EPA Method 5**	☐
☐	**PM10**	**EPA Method 201**	☐
☐	**PM2.5**	**(Specify)**	☐
☐	**Opacity**	**EPA Method 9**	☐
☐	**Visual E.**	**EPA Method 22**	☐
☐	**Stack Flow**	**EPA Methods 1 - 3**	☐
☐	**Moisture**	**EPA Method 4**	☐
☒	**Other**	**(Specify) EPA Method 19**	☐
☐	**Other**	**(Specify)**	☐

List Specific VOC's and HAP's:

VI. PROPOSED TEST RUN AND TEST LOAD INFORMATION

a. Number of Test Runs:	b. Run Duration	c. Required by (regulation or permit number):	d. Specific Condition or Section:
3	**20 min**	**NSR 220 M9**	**A205C**

PLEASE NOTE – Default run duration is 60 minutes, unless otherwise specified by an applicable regulation.

e. Expected Load:	f. Percent of Permitted Capacity:	g. Is this an opacity test?	h. If yes, no. of observation pts.:
>90%	**>90%**	**Yes** ☐ **No** ☒	

i. If expected load during test is less than 90% of capacity, explain**:**

NOTE – Failure to test at 90-100% of permitted load will limit unit operation to 110% of tested load until a new initial compliance test is conducted.

PLANT OR UNIT OPERATING PARAMETERS TO BE MONITORED

j. List and explain the plant operating parameters that will be monitored and applicable permit conditions or regulatory standards.

Fuel usage, compressor operating parameters, turbine operating parameters.

VII. ADDITIONAL DETAILS (where applicable)

RATA and INSTRUMENTAL ANALYZER CALIBRATION PROCEDURES

a. Do any of the methods you are proposing utilize instrumental analyzers (i.e.; EPA Methods 3A, 6C, 7E, 10, 18, 25/25A, 320 etc.)? If yes, briefly describe analyzer calibration procedures and/or calibration standard procedures. Enter the highest pollutant concentration expected and the proposed concentrations of calibration gases.	☒ Yes	☐ No

As described in the methods.

SAMPLING TRAIN LEAK CHECK PROCEDURES

b. Do any of the methods you are proposing utilize the EPA Method 5 sampling train (i.e.; EPA Methods 1-4, 5, 17, 26/26A, 29, etc.)? If yes, briefly describe sampling train and pitot tube leak check procedures:	☐ Yes	☒ No

EPA METHOD 19 IN LIEU OF EPA METHODS 1-4

c. Are you proposing to utilize EPA Method 19 in lieu of EPA Methods 1-4? If yes, explain why you believe this proposal is justified:	☒ Yes	☐ No

Method 19 with use of a calibrated fuel meter and current fuel gas analysis.

PLEASE NOTE – EPA Method 19 may be utilized in lieu of EPA Methods 1-4, subject to the approval of the Department. If you are proposing to utilize EPA Method 19 in lieu of EPA Methods 1-4, you MUST include a recent fuel gas heating value analysis as well as a recent fuel flow meter calibration certificate, preferably conducted on the day of the test, but no earlier than three months prior to the test date. If the analyses have been conducted prior to the test date, you MUST append the certificates to the protocol. If conducted on the day of the test, you MUST append the certificates to the final test report.

VIII. ATTACHMENTS (as needed to support proposed test; check all that apply)		
NOTIFICATION/PROTOCOL ATTACHMENTS		
☐	Road Map Indicating Directions from Nearest New Mexico Town to Facility	
☐	Schematic of process being tested showing emission points, sampling sites and stack cross-section	
☐	Copy of proposed test methods (except for those promulgated test methods found in 40 CFR 51, 60, 61 and 63)	
☐	Fuel Heating Value Analysis	
☐	Fuel Flow Meter Calibration Certificate	
☐	Other:	
☐	Other:	
TEST REPORT ATTACHMENTS		
☒	**Section 2. Tables of Results**	
☐	**Supporting Documents (Specify)**	
Retain Report Section 3 - Test Procedures, Data, Calculations, Appendices – 2 years NSR permits, 5 years TV		

IX. CERTIFICATION		
This document has been prepared under my supervision and is accurate and complete to the best of my knowledge. I understand that acceptance of this protocol does not waive the requirements of any permit or regulation. I understand that any procedural errors or omissions are the sole responsibility of the permit holder.		
Signature: Jon Fields	Print Name and Title: **Jon E. Fields - Director, Field Environmental**	Date: 2-9-2016
Responsible Official for Title V? ☐ Yes	☒ No (R.O signature not required for routine periodic testing)	

2016 COMPLIANCE TEST REPORT

ON

EXHAUST EMISSIONS

FROM TWO

SOLAR CENTAUR T-4702 CENTRIFUGAL INTERNAL COMBUSTION ENGINE

AT THE

SOUTH CARLSBAD COMPRESSOR STATION

NEAR

LOVING, NEW MEXICO

PREPARED FOR

ENTERPRISE FIELD SERVICES

PROJECT NUMBER 1377

STATE OF NEW MEXICO ENVIRONMENT DEPARTMENT
AIR QUALITY BUREAU PERMIT NUMBER 0220-M8-R1

PREPARED BY

COMPLIANCE SERVICES & TESTING

COMPLIANCE SERVICES & TESTING

P.O. Box 94191-87199
7108 Washington St. NE
Suite A
Albuquerque, NM 87109
(505) 681-4909 Phone
www.comptesting.com

February 3, 2016

Dina Ferguson
Enterprise Field Services
PO Box 4324
Houston, TX 77210

RE: Annual testing at the South Carlsbad Compressor Station.

Mrs. Ferguson:

On January 20, 2016 CST performed annual emissions testing at the South Carlsbad Compressor Station to satisfy the requirements of the New Mexico Environment Department Air Quality Bureau Permit Number 0220-M8-R1. The unit is identified as follows:

Engine Information		
Unit Number	1	2
Engine Make	Solar	
Engine Model	Centaur T-4702	
Serial Number	OHD10-C-7915	OHE12-C-7057
Rated Horsepower	3609	
Rated Speed	15000	

The testing followed procedures found in the NMED "ASTM D 6522-00 SOP". The mass emission rates were determined using EPA Method 19 (combustion stoichiometry). The rates in terms of pounds per hour and tons per year were calculated using the oxygen F-factor (DSCFex/MMBtu), the fuel consumption rate (SCFH), the fuel higher heating value (Btu/SCF), and the pollutant concentration. Fuel consumption was monitored from a fuel meter. The attached data sheet gives a detailed summary of the results of this test. Quality assurance data sheets are also attached.

Respectfully,



Jeremy Cahn
Compliance Services and Testing

Summary of Results
South Carlsbad Compressor Station, Unit #1

Company: Enterprise Field Services
Location: South Carlsbad Compressor Station
Source: Solar Centaur 40-T4702 SN: OHD10C7915
Engine Site Rating: 3609 Hp @ 15000 RPM
Technician: JC,FC
Sample System #: 1

Test Run Number	***1***	***2***	***3***	
Emissions Unit	**1**	**1**	**1**	
Date	1/20/16	1/20/16	1/20/16	
Start Time	7:53	8:18	8:43	
Stop Time	8:13	8:38	9:03	
Engine/Compressor Operation				
Turbine Load (%)	**94.7**	**95.0**	**95.2**	
Gas Producer Speed (%)	94.7	95.0	95.2	
Power Turbine Speed (%)	82.7	83.0	83.1	
Engine Horsepower (Hp)	3418	3429	3436	
Engine Compressor Discharge, PCD (psig)	104	105	105	
Fuel Valve Output (%)	59.9	61.3	60	
Suction Pressure (psig)	419	423	424	
Discharge Pressure (psig)	659	712	712	
Suction Temperature (°F)	98	98	99	
Discharge Temperature (°F)	123	124	177	
Air Inlet Temperature (T1) (°F)	40.2	39	43.2	
Average Exhaust Temperature (T5) (°F)	1080	1047	1090	
Compressor Throughput (MCFD)	72	72	72	
Fuel Data				
Measured Fuel Consumption (MSCFD)	788	788	788	
Calculated Fuel Consumption (SCFH)	17905	17905	17905	
O2 F-Factor (DSCF/MMBtu, HHV basis)	8696	8696	8696	
Fuel Heating Value (Btu/SCF, HHV)	1155	1155	1155	
BHp Specific Fuel Rate (Btu/Hp-hr, HHV basis)	198790	196897	6017	
Ambient Conditions				
Pressure Altitude (MSL)	3090	3090	3090	
Atmospheric Pressure ("Hg)	26.75	26.75	26.75	
Dry Bulb Temperature (°F)	41.7	42.1	44.8	
Wet Bulb Temperature (°F)	35.8	35.1	38.5	
Humidity (lb/lb air)	0.0035	0.0032	0.0040	
Measured Exhaust Emissions (Corrected)				***Average***
NOx (ppmv)	67.41	71.88	69.61	**69.63**
CO (ppmv)	13.62	8.90	8.16	**10.23**
O2 (vol %)	16.77	16.79	16.79	**16.78**
CO2 (vol %)	2.46	2.54	2.53	**2.51**
Fo (Natural Gas)	1.67	1.62	1.62	**1.64**
Exhaust Flow Rates (EPA Method 19 - Fuel Based)				
Dry SCFH (dry basis, calc. from Fuel Consumption)	910,503	914,424	913,092	**912,673**
Calculated Mass Emission Rates (EPA Method 19)				
NOx (lbs/hr) **{Permit Limit = 27.0}**	7.33	7.85	7.59	**7.59**
CO (lbs/hr) **{Permit Limit = 7.4}**	0.90	0.59	0.54	**0.68**
NOx (tons/yr) **{Permit Limit = 118.3}**	32.11	34.38	33.25	**33.25**
CO (tons/yr) **{Permit Limit = 32.5}**	3.95	2.59	2.37	**2.97**

Summary of Results
South Carlsbad Compressor Station, Unit #2

Company: Enterprise Field Services
Location: South Carlsbad Compressor Station
Source: Solar Centaur 40-T4702 SN: OHE12C7057
Engine Site Rating: 3609 Hp @ 15000 RPM
Technician: JC,FC
Sample System #: 2

Test Run Number	***1***	***2***	***3***	
Emissions Unit	**2**	**2**	**2**	
Date	1/20/16	1/20/16	1/20/16	
Start Time	7:53	8:18	8:43	
Stop Time	8:13	8:38	9:03	
Engine/Compressor Operation				
Turbine Load (%)	**94.7**	**95.2**	**95.3**	
Gas Producer Speed (%)	94.7	95.2	95.3	
Power Turbine Speed (%)	85.2	85.7	86.1	
Engine Horsepower (Hp)	3418	3436	3439	
Engine Compressor Discharge, PCD (psig)	109	110	110.0	
Fuel Valve Output (%)	39.2	39.5	39.6	
Suction Pressure (psig)	237	236	236	
Discharge Pressure (psig)	427	428	427	
Suction Temperature (°F)	41	42	42	
Discharge Temperature (°F)	123	124	125	
Air Inlet Temperature (T1) (°F)	40.2	39	41	
Average Exhaust Temperature (T5) (°F)	1080	1047	1056	
Compressor Throughput (MCFD)	72	72	72	
Fuel Data				
Measured Fuel Consumption (MSCFD)	788	788	788	
Calculated Fuel Consumption (SCFH)	17905	17905	17905	
O2 F-Factor (DSCF/MMBtu, HHV basis)	8696	8696	8696	
Fuel Heating Value (Btu/SCF, HHV)	1155	1155	1155	
BHp Specific Fuel Rate (Btu/Hp-hr, HHV basis)	6049	6017	6011	
Ambient Conditions				
Pressure Altitude (MSL)	3090	3090	3090	
Atmospheric Pressure ("Hg)	26.75	26.75	26.75	
Dry Bulb Temperature (°F)	41.7	42.1	44.8	
Wet Bulb Temperature (°F)	35.8	35.1	38.5	
Humidity (lb/lb air)	0.0035	0.0032	0.0040	
Measured Exhaust Emissions (Corrected)				***Average***
NOx (ppmv)	71.70	75.09	73.53	**73.44**
CO (ppmv)	14.67	12.03	9.98	**12.23**
O2 (vol %)	17.59	17.45	17.30	**17.45**
CO2 (vol %)	2.00	2.12	2.18	**2.10**
Fo (Natural Gas)	1.66	1.63	1.65	**1.65**
Exhaust Flow Rates (EPA Method 19 - Fuel Based)				
Dry SCFH (dry basis, calc. from Fuel Consumption)	1,134,456	1,087,659	1,044,190	**1,088,769**
Calculated Mass Emission Rates (EPA Method 19)				
NOx (lbs/hr) **{Permit Limit = 27.0}**	9.71	9.75	9.17	**9.55**
CO (lbs/hr) **{Permit Limit = 7.4}**	1.21	0.95	0.76	**0.97**
NOx (tons/yr) **{Permit Limit = 118.3}**	42.55	42.72	40.17	**41.81**
CO (tons/yr) **{Permit Limit = 32.5}**	5.30	4.17	3.32	**4.26**

Quality Assurance Report - Sample System #1
Converter Efficiency Test, Interference Test, Response Time and Bias Test, Mass Flow Controller Check, Pre and Post Leak Checks

NOx Converter Efficiency Check

Method: *7E Section 8.2.4*
Frequency: *Before each field test*
Criteria: *Equal to or greater than 90% conversion efficiency*

Test Date: 1/20/16 Technician: JC

NO2	*Results*
Certified Value	48.9 ppmv
Observed Value	49.0 ppmv
Converter Efficiency	100%

Interference Response Checks

Method: *7E Section 8.2.7*
Frequency: *Prior to initial use in the field or after major alteration or modification*
Criteria: *Sum of responses < 2.5 % of calibration span*

Test Date: 1/20/16 Technician: JC

Interference Test Gases		**Analyzer Response (ppmv or % as applicable)**					
Type Gas	*Conc.*	*NOx (ppmv)*	*CO (ppmv)*	*SO2 (ppmv)*	*THC (ppmv)*	*O2 (%)*	*CO2 (%)*
NOx in N2	44.5 ppm	---	N/A	---	---	0.00	-0.03
CO in N2	44.8 ppm	N/A	---	---	---	0.00	-0.03
O2 in N2	9.6%	0.05	-0.24	---	---	---	N/A
CO2 in N2	6.5%	0.05	-0.24	---	---	N/A	---
THC in air	---	---	---	---	---	---	---

Sample System Bias & Response Time Check

Method: *7E Section 8.2.5-6*
Frequency: *Before sampling begins*
Criteria: *5% of calibration span*
Criteria: *Note the longer of the two times as the response time*

Test Date: 1/20/16 Technician: JC

Sample System Bias Check

Introduction Technique	**NOx (ppmv)**	**CO (ppmv)**	**SO2 (ppmv)**	**THC (ppmv)**	**O2 (%)**	**CO2 (%)**
Direct Zero Input	0.0	0.0			0.0	0.0
Bias Input	0.0	0.0			0.0	0.0
Zero Bias	0.0%	0.0%			0.0%	0.0%
Direct Span Input	44.6	44.8			9.6	6.5
Bias Input	43.7	44.8			9.6	6.5
Span Bias	-1.1%	0.0%			0.0%	0.0%

Sample System Response Time

Parameter	**NOx (ppmv)**	**CO (ppmv)**	**SO2 (ppmv)**	**THC (ppmv)**	**O2 (%)**	**CO2 (%)**
Upscale Response	40	35			50	50
Downscale Response	40	35			45	55
Purge Time	110 seconds					

Sample System Leak Check

Frequency: *Daily or whenever the sample system is moved or disassembled (CST SOP)*
Criteria: *Less than one inch decrease in pressure in one minute (CST SOP)*

Test Date				
1/20/16	Vacuum Initial:	0.0 inches	/ minute at	14 inches Hg
	Vacuum Final:	0.0 inches	/ minute at	14 inches Hg

Quality Assurance Worksheet
Instrument Calibration and Drift Correction

Company: Enterprise Field Services
Location: South Carlsbad Compressor Station
Source: Solar Centaur 40-T4702 SN: OHD10C7915
Engine Site Rating: 3609 Hp @ 15000 RPM
Test Date: Wednesday, January 20, 2016
Sample System #: 1

UNIT NUMBER 1					TEST RUN 1					TEST RUN 2					TEST RUN 3				
GAS LEVELS PER METHOD	CALIBRATION GAS CONCENTRATIONS		INITIAL CALIBRATION & LINEARITY CHECK		Start Run 7:53	ZERO and SPAN CALIBRATION CHECK				Start Run 8:18	ZERO and SPAN CALIBRATION CHECK				Start Run 8:43	ZERO and SPAN CALIBRATION CHECK			
	Certified Concentration	Target (% Span)	Analyzer Response	Calibration Error < 2%	Stop Run 8:13	Initial Response	Final Response	Drift < 3%	Bias < 5%	Stop Run 8:38	Initial Response	Final Response	Drift < 3%	Bias < 5%	Stop Run 9:03	Initial Response	Final Response	Drift < 3%	Bias < 5%
NOx					Avg. ppmv					Avg. ppmv					Avg. ppmv				
Zero	0.0 ppmv	0.0	0.0 ppmv	0.0%	**66.35**	0.0 ppmv	0.0 ppmv	0.0%	0.0%	**71.15**	0.0 ppmv	0.0 ppmv	0.0%	0.0%	**69.49**	0.0 ppmv	1.0 ppmv	1.2%	1.2%
					Corr. ppmv					Corr. ppmv					Corr. ppmv				
Mid	44.5 ppmv	52.0	44.6 ppmv	0.1%	**67.41**	43.7 ppmv	43.9 ppmv	0.4%	0.7%	**71.88**	43.9 ppmv	44.2 ppmv	0.7%	0.4%	**69.61**	44.2 ppmv	45.0 ppmv	1.8%	0.6%
High	85.5 ppmv	100.0	85.7 ppmv	0.2%	Cal. Span					Cal. Span					Cal. Span				
Analyzer Range = 100 ppmv			Span = 85.5		**85.5**					**85.5**					**85.5**				
CO					Avg. ppmv					Avg. ppmv					Avg. ppmv				
Zero	0.0 ppmv	0.0	0.0 ppmv	0.0%	**13.52**	0.0 ppmv	0.0 ppmv	0.0%	0.0%	**8.80**	0.0 ppmv	0.0 ppmv	0.0%	0.0%	**7.71**	0.0 ppmv	-1.0 ppmv	1.2%	1.2%
					Corr. ppmv					Corr. ppmv					Corr. ppmv				
Mid	44.8 ppmv	53.7	44.8 ppmv	0.0%	**13.62**	44.8 ppmv	44.1 ppmv	1.6%	0.8%	**8.90**	44.1 ppmv	44.5 ppmv	0.9%	0.4%	**8.16**	44.5 ppmv	44.7 ppmv	0.4%	0.1%
High	83.4 ppmv	100.0	83.0 ppmv	-0.5%	Cal. Span					Cal. Span					Cal. Span				
Analyzer Range = 100 ppmv			Span = 83.4		**83.4**					**83.4**					**83.4**				
O2					Avg.%					Avg.%					Avg.%				
Zero	0.0%	0.0	0.0%	0.0%	**16.77**	0.0%	0.0%	0.0%	0.0%	**16.79**	0.0%	0.0%	0.0%	0.0%	**16.79**	0.0%	0.0%	0.0%	0.0%
					Corr. %					Corr. %					Corr. %				
Mid	9.6%	45.5	9.6%	0.0%	**16.77**	9.6%	9.6%	0.0%	0.0%	**16.79**	9.6%	9.6%	0.0%	0.0%	**16.79**	9.6%	9.6%	0.0%	0.0%
High	21.1%	100.0	21.0%	-0.5%	Cal. Span					Cal. Span					Cal. Span				
Analyzer Range = 22.0%			Span = 21.1		**21.1**					**21.1**					**21.1**				
CO2					Avg.%					Avg.%					Avg.%				
Zero	0.0%	0.0	0.0%	0.0%	**2.46**	0.0%	0.0%	0.0%	0.0%	**2.54**	0.0%	0.0%	0.0%	0.0%	**2.53**	0.0%	0.0%	0.0%	0.0%
					Corr. %					Corr. %					Corr. %				
Mid	4.0%	61.5	4.1%	1.5%	**2.46**					**2.54**					**2.53**				
High	6.5%	100.0	6.5%	0.0%	Cal. Span	6.5%	6.5%	0.0%	0.0%	Cal. Span	6.5%	6.5%	0.0%	0.0%	Cal. Span	6.5%	6.5%	0.0%	0.0%
Analyzer Range = 7.0%			Span = 6.5		**6.5**					**6.5**					**6.5**				

Quality Assurance Report - Sample System #2
Converter Efficiency Test, Interference Test, Response Time and Bias Test, Mass Flow Controller Check, Pre and Post Leak Checks

NOx Converter Efficiency Check

Method: *7E Section 8.2.4*
Frequency: *Before each field test*
Criteria: *Equal to or greater than 90% conversion efficiency*

Test Date: 1/20/16 Technician: JC

NO2	*Results*
Certified Value	48.9 ppmv
Observed Value	49.4 ppmv
Converter Efficiency	101%

Interference Response Checks

Method: *7E Section 8.2.7*
Frequency: *Prior to initial use in the field or after major alteration or modification*
Criteria: *Sum of responses < 2.5 % of calibration span*

Test Date: 1/20/16 Technician: JC

Interference Test Gases		**Analyzer Response (ppmv or % as applicable)**					
Type Gas	*Conc.*	*NOx (ppmv)*	*CO (ppmv)*	*SO2 (ppmv)*	*THC (ppmv)*	*O2 (%)*	*CO2 (%)*
NOx in N2	44.5 ppm	---	N/A	---	---	0.01	0.02
CO in N2	44.8 ppm	N/A	---	---	---	0.01	0.02
O2 in N2	9.6%	0.37	-0.12	---	---	---	N/A
CO2 in N2	6.5%	0.37	-0.12	---	---	N/A	---
THC in air	---	---	---	---	---	---	---

Sample System Bias & Response Time Check

Method: *7E Section 8.2.5-6*
Frequency: *Before sampling begins*
Criteria: *5% of calibration span*
Criteria: *Note the longer of the two times as the response time*

Test Date: 1/20/16 Technician: JC

Sample System Bias Check

Introduction Technique	**NOx (ppmv)**	**CO (ppmv)**	**SO2 (ppmv)**	**THC (ppmv)**	**O2 (%)**	**CO2 (%)**
Direct Zero Input	0.0	0.0			0.0	0.0
Bias Input	0.0	0.0			0.0	0.0
Zero Bias	0.0%	0.0%			0.0%	0.0%
Direct Span Input	44.1	45.0			9.6	6.5
Bias Input	43.6	43.9			9.6	6.5
Span Bias	-0.6%	-1.3%			0.0%	0.0%

Sample System Response Time

Parameter	**NOx (ppmv)**	**CO (ppmv)**	**SO2 (ppmv)**	**THC (ppmv)**	**O2 (%)**	**CO2 (%)**
Upscale Response	35	40			45	55
Downscale Response	35	40			45	55
Purge Time	110 seconds					

Sample System Leak Check

Frequency: *Daily or whenever the sample system is moved or disassembled (CST SOP)*
Criteria: *Less than one inch decrease in pressure in one minute (CST SOP)*

Test Date				
1/20/16	Vacuum Initial:	0.0 inches	/ minute at	16 inches Hg
	Vacuum Final:	0.0 inches	/ minute at	16 inches Hg

Quality Assurance Worksheet
Instrument Calibration and Drift Correction

Company: Enterprise Field Services
Location: South Carlsbad Compressor Station
Source: Solar Centaur 40-T4702 SN: OHE12C7057
Engine Site Rating: 3609 Hp @ 15000 RPM
Test Date: Wednesday, January 20, 2016
Sample System #: 2

UNIT NUMBER 2					TEST RUN 1					TEST RUN 2					TEST RUN 3				
GAS LEVELS PER METHOD	CALIBRATION GAS CONCENTRATIONS		INITIAL CALIBRATION & LINEARITY CHECK		Start Run 7:53	ZERO and SPAN CALIBRATION CHECK				Start Run 8:18	ZERO and SPAN CALIBRATION CHECK				Start Run 8:43	ZERO and SPAN CALIBRATION CHECK			
	Certified Concentration	Target (% Span)	Analyzer Response	Calibration Error < 2%	Stop Run 8:13	Initial Response	Final Response	Drift < 3%	Bias < 5%	Stop Run 8:38	Initial Response	Final Response	Drift < 3%	Bias < 5%	Stop Run 9:03	Initial Response	Final Response	Drift < 3%	Bias < 5%
NOx					Avg. ppmv					Avg. ppmv					Avg. ppmv				
Zero	0.0 ppmv	0.0	0.0 ppmv	0.0%	**70.49**	0.0 ppmv	0.0 ppmv	0.0%	0.0%	**73.73**	0.0 ppmv	1.0 ppmv	1.2%	1.2%	**72.22**	1.0 ppmv	1.0 ppmv	0.0%	1.2%
					Corr. ppmv					Corr. ppmv					Corr. ppmv				
Mid	44.5 ppmv	52.0	44.1 ppmv	-0.5%	**71.70**	43.6 ppmv	43.9 ppmv	0.7%	0.7%	**75.09**	43.9 ppmv	43.9 ppmv	0.0%	0.7%	**73.53**	43.9 ppmv	44.3 ppmv	0.9%	0.2%
High	85.5 ppmv	100.0	84.8 ppmv	-0.8%	Cal. Span					Cal. Span					Cal. Span				
Analyzer Range = 100 ppmv			**Span = 85.5**		**85.5**					**85.5**					**85.5**				
CO					Avg. ppmv					Avg. ppmv					Avg. ppmv				
Zero	0.0 ppmv	0.0	0.0 ppmv	0.0%	**14.43**	0.0 ppmv	0.0 ppmv	0.0%	0.0%	**11.91**	0.0 ppmv	0.0 ppmv	0.0%	0.0%	**9.57**	0.0 ppmv	-1.0 ppmv	1.2%	1.2%
					Corr. ppmv					Corr. ppmv					Corr. ppmv				
Mid	44.8 ppmv	53.7	45.0 ppmv	0.2%	**14.67**	43.9 ppmv	44.2 ppmv	0.7%	0.7%	**12.03**	44.2 ppmv	44.5 ppmv	0.7%	0.4%	**9.98**	44.5 ppmv	44.9 ppmv	0.9%	0.1%
High	83.4 ppmv	100.0	83.9 ppmv	0.6%	Cal. Span					Cal. Span					Cal. Span				
Analyzer Range = 100 ppmv			**Span = 83.4**		**83.4**					**83.4**					**83.4**				
O2					Avg.%					Avg.%					Avg.%				
Zero	0.0%	0.0	0.0%	0.0%	**17.59**	0.0%	0.0%	0.0%	0.0%	**17.45**	0.0%	0.0%	0.0%	0.0%	**17.39**	0.0%	0.0%	0.0%	0.0%
					Corr. %					Corr. %					Corr. %				
Mid	9.6%	45.5	9.6%	0.0%	**17.59**	9.6%	9.6%	0.0%	0.0%	**17.45**	9.6%	9.6%	0.0%	0.0%	**17.30**	9.6%	9.7%	1.0%	0.5%
High	21.1%	100.0	21.1%	0.0%	Cal. Span					Cal. Span					Cal. Span				
Analyzer Range = 22.0%			**Span = 21.1**		**21.1**					**21.1**					**21.1**				
CO2					Avg.%					Avg.%					Avg.%				
Zero	0.0%	0.0	0.0%	0.0%	**2.00**	0.0%	0.0%	0.0%	0.0%	**2.10**	0.0%	0.0%	0.0%	0.0%	**2.14**	0.0%	0.0%	0.0%	0.0%
					Corr. %					Corr. %					Corr. %				
Mid	4.0%	61.5	4.0%	0.0%	**2.00**					**2.12**					**2.18**				
High	6.5%	100.0	6.5%	0.0%	Cal. Span	6.5%	6.5%	0.0%	0.0%	Cal. Span	6.5%	6.4%	1.5%	1.5%	Cal. Span	6.4%	6.4%	0.0%	1.5%
Analyzer Range = 7.0%			**Span = 6.5**		**6.5**					**6.5**					**6.5**				

ENTERPRISE™ Measurement Processing System

MPS Home | Meter Data | Find | Reports | Work Orders | Communications | On Call | Paging

M
E
N
U

Snap-shot

1/20/2016 8:00:00	
Static	198.13
DP	63.18
Temp	33.28
Volume	1,575.00
Yest MCF	1,463.88
Forecast	1,575.17

General Information For 16961-01

WellName		SO CARLSBAD TURB FUEL	
PIN		1696101	
Group Number	5	**Local Address**	57
System	GTTAES2	**Scada Server**	AESTX2
DAL / OrgID	661 / EPF	**Team**	C2
Model	827	**Load File**	AESORIF
Business Party	0	**Operator Name**	ENTERPRISE FIELD SERVICES LLC
Pipe: 4.03	Plate: 1.5	B/R:	0.37
Meter Type	Non WATT Meter		
S/T/R	12 / 23S / 27E		

Measurement

1/20/2016 8:00:00	
Static	198.13
DP	63.18
Temp	33.28
Volume	65.63
Flow Time	60.00

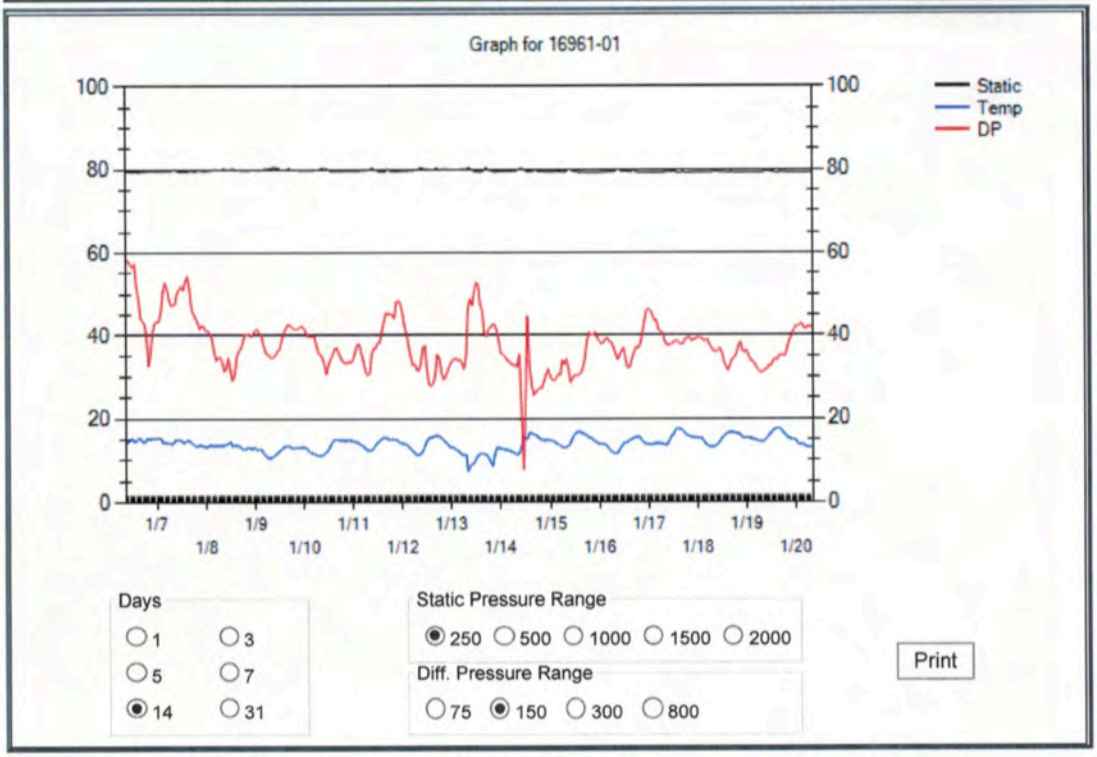

Copyright © 2005, Enterprise Products.
For problems or questions regarding this web site contact Bob Bevers [rbevers@eprod.com] .

Fuel Gas Analysis, Gas Fuel O2 F-Factor, Moisture Content, Fuel VOC%, and Heating Value Calculation

Company: Enterprise Field Services
Sample ID: South Carlsbad
Time: N/A
Date: 2/2/16

CALCULATION OF DENSITY AND HEATING VALUE @ 68°F and 29.92 in Hg

Component	% Volume	Molecular Wt.	Density (lb/ft3)	% volume x Density	weight %	Component Gross Btu/lb	Weight Fract. Btu	Gross Htng. Val. (Btu/SCF)	Volume Fract. Btu
Hydrogen		2.016	0.0052	0.00000	0.0000	61100	0.00	325.0	0.000
Oxygen		32.000	0.0831	0.00000	0.0000	0	0.00	0.0	0.000
Nitrogen	2.9591	28.016	0.0731	0.00216	4.2554	0	0.00	0.0	0.000
CO2	0.0001	44.010	0.1149	0.00000	0.0002	0	0.00	0.0	0.000
CO		28.010	0.0727	0.00000	0.0000	4347	0.00	322.0	0.000
Methane	81.9206	16.041	0.0417	0.03412	67.1414	23879	16032.70	1013.0	829.856
Ethane	9.7466	30.067	0.0789	0.00769	15.1268	22320	3376.30	1792.0	174.659
Ethylene		28.051	0.0733	0.00000	0.0000	21644	0.00	1614.0	0.000
Propane	4.1308	44.092	0.1175	0.00485	9.5487	21661	2068.34	2590.0	106.988
propylene		42.077	0.1090	0.00000	0.0000	21041	0.00	2336.0	0.000
Isobutane	0.3608	58.118	0.1554	0.00056	1.1032	21308	235.08	3363.0	12.134
n-butane	0.7075	58.118	0.1554	0.00110	2.1634	21257	459.87	3370.0	23.843
Isobutene		56.102	0.1454	0.00000	0.0000	20840	0.00	3068.0	0.000
Isopentane	0.0822	72.144	0.1870	0.00015	0.3025	21091	63.80	4008.0	3.295
n-pentane	0.0662	72.144	0.1870	0.00012	0.2436	21052	51.29	4016.0	2.659
n-hexane +	0.0261	86.169	0.2234	0.00006	0.1147	20940	24.02	4762.0	1.243
H2S		34.076	0.0895	0.00000	0.0000	7100	0.00	647.0	0.000
Totals	**100.00**	**731.25**	**1.91**	**0.0508**	**100.00**	**Gross Heating Value**			
Average Density:		**0.0508**	**Specific Gravity:**		**0.664**	**Btu/lb:**	**22311**	**Btu/SCF:**	**1155**

CALCULATION OF F FACTORS

Component	Mol. Wt.	C Factor	H Factor	% volume	Fract. Wt.	Weight Percents				
						Carbon	Hydrogen	Nitrogen	Oxygen	Sulfur
Hydrogen	2.016	0.0000	1.0000	0.0000	0.0000		0.0000			
Oxygen	32.000	0.0000	0.0000	0.0000	0.0000				0.0000	
Nitrogen	28.016	0.0000	0.0000	2.9591	82.9021			4.2575		
CO2	44.010	0.2723	0.0000	0.0001	0.0044	0.0001			0.0002	
CO	28.010	0.4259	0.0000	0.0000	0.0000	0.0000			0.0000	
Methane	16.041	0.7500	0.2500	81.9206	1314.0883	50.6139	16.8713			
Ethane	30.067	0.8000	0.2000	9.7466	293.0510	12.0397	3.0099			
Ethylene	28.051	0.8571	0.1429	0.0000	0.0000	0.0000	0.0000			
Propane	44.092	0.8182	0.1818	4.1308	182.1352	7.6529	1.7007			
Propene	42.077	0.8571	0.1429	0.0000	0.0000	0.0000	0.0000			
Isobutane	58.118	0.8276	0.1725	0.3608	20.9690	0.8912	0.1857			
n-butane	58.118	0.8276	0.1725	0.7075	41.1185	1.7476	0.3642			
Isobutene	56.102	0.8571	0.1429	0.0000	0.0000	0.0000	0.0000			
Isopentane	72.144	0.8333	0.1667	0.0822	5.9302	0.2538	0.0508			
n-pentane	72.144	0.8333	0.1667	0.0662	4.7759	0.2044	0.0409			
n-hexane	86.169	0.8372	0.1628	0.0261	2.2490	0.0967	0.0188			
H2S	34.076	0.0000	0.0587	0.0000	0.0000	0.0000	0.0000			0.0000
Totals	**731.25**	**9.80**	**2.96**	**100.00**	**1947.224**	**73.500**	**22.242**	**4.257**	**0.000**	**0.000**

CALCULATED VALUES

O2 F Factor (dry)	**8696**	DSCF of Exhaust/MMBtu of Fuel Burned @ 0% excess air
O2 F Factor (wet)	**10620**	SCF of Exhaust/MMBtu of Fuel Burned @ 0% excess air
Moisture F Factor	**1924**	SCF of Water/MMBtu of Fuel Burned @ 0% excess air
Combust. Moisture	**18.12**	Volume % water in flue gas @ 0% excess air
CO2 F Factor	**1057**	DSCF of CO2/MMBtu of Fuel Burned @ 0% excess air
Carbon Dioxide	**12.16**	Volume % CO2 in flue gas @ 0% O2
Predicted Fo Factor	**1.72**	EPA Method 3b Fo value
Fuel VOC %	**29.63%**	Non-methane
Fuel VOC %	**13.94%**	Non-methane, non-ethane

Example Calculations

Drift Corrected Emission Concentrations

Formula

$$C_{GAS} = (Ç - Co) \times \frac{C_{MA}}{C_M - C_O} \quad \textit{(eq. 7E-5)}$$

All Calculations Refer to Test Run 1 Unit #1

$Ç_{NOx}$ =	Raw Concentration of NOx	= 66.35 ppmv
C_O =	Avg. of Initial and Final Zero Checks	= 0.00 ppmv
C_M =	Avg. of Initial and Final Span Checks	= 43.80 ppmv
C_{MA} =	Certified Concentration of Span Gas	= 44.50 ppmv
C_{NOx} =	**(66.35 - 0.00) x 44.50 / (43.80 - 0.00)**	**= 67.41 ppmv**

$Ç_{CO}$ =	Raw Concentration of CO	= 13.52 ppmv
C_O =	Avg. of Initial and Final Zero Checks	= 0.00 ppmv
C_M =	Avg. of Initial and Final Span Checks	= 44.45 ppmv
C_{MA} =	Certified Concentration of Span Gas	= 44.80 ppmv
C_{CO} =	**(13.52 - 0.00) x 44.80 / (44.45 - 0.00)**	**= 13.62 ppmv**

$Ç_{O2}$ =	Raw Concentration of O2	= 16.77%
C_O =	Avg. of initial and final zero bias checks	= 0.00%
C_M =	Avg. of initial and final span bias checks	= 9.60%
C_{MA} =	Actual concentration of span gas	= 9.60%
C_{O2} =	**(16.77 - 0.00) x 9.60 / (9.60 - 0.00)**	**= 16.77%**

$Ç_{CO2}$ =	Raw Concentration of CO2	= 2.46%
C_O =	Avg. of initial and final zero bias checks	= 0.00%
C_M =	Avg. of initial and final span bias checks	= 6.50%
C_{MA} =	Actual concentration of span gas	= 6.50%
C_{CO2} =	**(2.46 - 0.00) x 6.50 / (6.50 - 0.00)**	**= 2.46%**

Fo Calculation to Verify O2 / CO2 Measurements (Eq. 3b-1)

C_{O2} =	Corrected Concentration of O2	= 16.77%
C_{CO2} =	Corrected Concentration of CO2	= 2.46%
Th. F_O =	Theoretical Fo from FGA	= 1.72
F_O =	(20.9 - O2%) / CO2 %	
F_O =	**(20.9 - 16.77) / 2.46**	**= 1.67**

Example Calculations

Mass Emission Rates via EPA Method 19

Measured Data and Constants from Test Run 1 Unit #1

C_{NOx} =	Corrected Concentration of NOx	=	67.41	ppmv
C_{CO} =	Corrected Concentration of CO	=	13.62	ppmv
Horsepower =	Observed Horsepower	=	3418	Hp
$Q_{S\ M19}$ =	Measured Stack Flow Rate	=	910,503	SCF/H Dry
lb / mole =	EPA STP for Ideal Gas	=	385.15	SCF
lbs / hr to tpy =	Mass Conversion Factor	=	4.38	hrs-tons / lbs-yr
C_F =	PPMV Normalization	=	1.00E-06	1 / ppmv
MW_{NOx} =	Molecular Weight of NOx	=	46	lb / lb-mol
MW_{CO} =	Molecular Weight of CO	=	28	lb / lb-mol

Stack Gas Flow Rate via Method 19 (eq. 19-1)

Q_F =	Fuel Flow (Measured)	=	17905	SCF/H
F_{BTU} =	Fuel Higher Heating Value	=	1155	Btu/SCF
F_{O2} =	O2 F-Factor	=	8696	DSCF/MMBtu
C_{O2} =	Corrected Concentration of O2	=	16.77	%

$$Q_{S\ M19} = Q_F \times F_{BTU} \times F_{O2} \times 10^{6} \times \frac{20.9}{(20.9 - \%O2)}$$ DSCF/H

$$Q_{S\ M19} = 17905 \times 1155 \times 8696 \times 5.06 \times 1.00E\text{-}06$$

$Q_{S\ M19}$ = 910,503 DSCF/H

Adjust Measured Concentrations to 15% O2 (Eq. 60.335)

Cx @ 15% O2 $= Cx\ (ppmv) \times \frac{5.9}{(20.9 - O2\%)}$

C_{NOx} @ 15% O2 $= 67.41 \times \frac{5.9}{(20.9 - 16.77)} =$ **96.37 @ 15% O2**

Formulas

Pounds per Hour (lbs/hr)

$$Ex\ (lb/hr) = Cx \times C_F \times Qs \times \{ MWx / (lb / mole) \}$$

Tons per Year (tpy)

$$Ex\ (tpy) = Ex\ (lb/hr) \times \{ 8760\ (hr / yr) / 2000\ (lb / ton) \}$$

Calculated Mass Emission Rates From Method 19 Exhaust Flow Rate

E_{NOx}

lbs/hr $= 67.41 \times 1.00E\text{-}06 \times 910,503 \times \frac{46}{385.15} =$ **7.33**

tpy $= 7.33\ lb/hr \times 4.38 \times \frac{\text{hrs-ton}}{\text{lbs-yr}} =$ **32.11**

E_{CO}

lbs/hr $= 13.62 \times 1.00E\text{-}06 \times 910,503 \times \frac{28}{385.15} =$ **0.90**

tpy $= 0.90\ lb/hr \times 4.38 \times \frac{\text{hrs-ton}}{\text{lbs-yr}} =$ **3.95**

MATHESON
ask. . .The Gas Professionals™

1700 Scepter Rd
Waverly, TN 37185
931-296-3357

Certificate of Analysis - EPA Protocol Mixtures

Customer: CST

Customer PO#:

Protocol: G1

Reference #: T186938-4

Lot#: 9303606470

Cylinder Number: CC203971

Cylinder Pressure: 1900 PSIG

Last Analysis Date: 8/22/2013

Expiration Date: 8/23/2016

DO NOT USE THIS CYLINDER WHEN THE PRESSURE FALLS BELOW 100 PSIG

Component: Nitric Oxide

Certified Conc: 48.9 PPM +/- 0.2 PPM ABS

NOx: 49.9 PPM Reference Only

BALANCE GAS: Nitrogen

REPLICATE RESPONSES

Date: 8/15/2013	Date: 8/22/2013
49.0	48.9
49.0	48.8
48.7	49.1

REFERENCE STANDARDS:

Component: Nitric Oxide
Reference Standard: NTRM
Cylinder #: ND44693
Concentration: 98.17 PPM
Exp Date: 9/20/2015
NIST Sample #: 121101

CERTIFICATION INSTRUMENTS

Component: Nitric Oxide
Make/Model: Antaris IGS
Serial Number: AKS1000151
Measurement Principle: FTIR
Last Calibration: 8/12/2013

Notes:

The certification was performed according to EPA Traceability Protocol for Assay and Certification of Gaseous Calibration Standards May 2012, using procedure G1 and/or G2. U.S EPA Vendor ID Number: D62013, PGVP Participation Date: 01/01/13, PGVP Renewal Date: 01/01/14

Analyst: Taylor Wallace

Taylor Wallace

Date: 8/22/2013

MATHESON
ask. . .The Gas Professionals™
1700 Scepter Rd
Waverly, TN 37185
931-296-3357

Certificate of Analysis - EPA Protocol Mixtures

Customer: CST

Customer PO#:

Part # G2676958

Protocol:	Reference #:	Lot#:
G1	T204960-2	9305612744

Cylinder Number: SX37028
Cylinder Pressure: 1900 psig
Last Analysis Date: 2/18/2015
Expiration Date: 2/19/2018

DO NOT USE THIS CYLINDER WHEN THE PRESSURE FALLS BELOW 100 PSIG

Component: Carbon Monoxide
Certified Conc: 44.84 ppm +/- 0.06 ppm ABS

Component: Nitric Oxide
Certified Conc: 44.5 ppm +/- 0.2 ppm ABS

NOx: 44.6 ppm Reference Only

BALANCE GAS: Nitrogen

REPLICATE RESPONSES

Date: 2/9/2015	Date: 2/9/2015	Date: 2/18/2015
44.85	44.6	44.6
44.83	44.4	44.6
44.84	44.4	44.5

REFERENCE STANDARDS:

Component:	Carbon Monoxide	Component:	Nitric Oxide
Reference Standard:	SRM	Reference Standard:	SRM
Cylinder #:	FF10672	Cylinder #:	FF31654
Concentration:	24.512 ppm	Concentration:	19.06 ppm
Exp. Date:	3/28/2021	Exp. Date:	4/11/2016
NIST Sample #:	58-E-11	NIST Sample #:	50-G-09

CERTIFICATION INSTRUMENTS

Component:	Carbon Monoxide	Component:	Nitric Oxide
Make/Model:	Horiba VIA-510	Make/Model:	Horiba CLA-510SS
Serial Number:	ETYS79C6	Serial Number:	FDRJ8FDME
Measurement Principle:	NDIR	Measurement Principle:	CHEMI
Last Calibration:	1/27/2015	Last Calibration:	1/19/2015

Notes:

The certification was performed according to EPA Traceability Protocol for Assay and Certification of Gaseous Calibration Standards May 2012, using procedure G1 and/or G2. U.S EPA Vendor ID Number: D62015, PGVP Participation Date: 01/01/15, PGVP Renewal Date: 01/01/16

Analyst: Roman Khidekel

Date: 2/26/2015

MATHESON
ask. . .The Gas Professionals™

1700 Scepter Rd
Waverly, TN 37185
931-296-3357

Certificate of Analysis - EPA Protocol Mixtures

Customer: Matheson Tri-Gas

Customer PO#:

Protocol:	Reference #:	Lot#:
G1	T201719-3	9304611567

DO NOT USE THIS CYLINDER WHEN THE PRESSURE FALLS BELOW 100 PSIG

Cylinder Number: SX46823
Cylinder Pressure: 1900 psig
Last Analysis Date: 10/28/2014
Expiration Date: 10/29/2022

Matheson Part Number: G2687072

Component: Carbon Monoxide
Certified Conc: 83.39 ppm +/- 0.08 ppm ABS

Component: Nitric Oxide
Certified Conc: 85.5 ppm +/- 0.3 ppm ABS

NOx: 86.3 ppm Reference Only

BALANCE GAS: Nitrogen

REPLICATE RESPONSES

Date: 10/21/2014	Date: 10/21/2014	Date: 10/28/2014
83.39	85.4	85.9
83.25	85.3	85.7
83.53	85.5	86.0

REFERENCE STANDARDS:

Component: Carbon Monoxide	Component: Nitric Oxide
Reference Standard: SRM	Reference Standard: NTRM
Cylinder #: FF18328	Cylinder #: ND44704
Concentration: 49.136 ppm	Concentration: 98.17 ppm
Exp. Date: 2/24/2021	Exp. Date: 9/20/2015
NIST Sample #: 04-L-64	NIST Sample #: 121101

CERTIFICATION INSTRUMENTS

Component: Carbon Monoxide	Component: Nitric Oxide
Make/Model: Antaris IGS	Make/Model: Antaris IGS
Serial Number: AKS1000151	Serial Number: AKS1000151
Measurement Principle: FTIR	Measurement Principle: FTIR
Last Calibration: 9/30/2014	Last Calibration: 10/27/2014

Notes:

The certification was performed according to EPA Traceability Protocol for Assay and Certification of Gaseous Calibration Standards May 2012, using procedure G1 and/or G2. U.S EPA Vendor ID Number: D62014, PGVP Participation Date: 01/01/14, PGVP Renewal Date: 01/01/15

Analyst: Roman Khidekel

Date: 10/29/2014

MATHESON
ask. . .The Gas Professionals™

1700 Scepter Rd
Waverly, TN 37185
931-296-3357

Certificate of Analysis - EPA Protocol Mixtures

Customer: WHS: 710

Part # G2689319

		Protocol:	*Reference #:	Lot#:
Cylinder Number:	SX35534	G1	T212837-01	9305615921
Cylinder Pressure:	1900 psig			
Last Analysis Date:	10/16/2015			
Expiration Date:	10/16/2023			

DO NOT USE THIS CYLINDER WHEN THE PRESSURE FALLS BELOW 100 PSIG

		REPLICATE RESPONSES
Component:	Carbon Dioxide	Date: 10/16/2015
Certified Conc:	6.46% +/- 0.02% ABS	6.46 6.46 6.46
Component:	Oxygen	Date: 10/16/2015
Certified Conc:	9.56 % +/- 0.02% ABS	9.56 9.56 9.55

BALANCE GAS: Nitrogen

REFERENCE STANDARDS:

Component:	Carbon Dioxide	Component:	Oxygen
Reference Standard:	SRM	Reference Standard:	SRM
Cylinder #:	FF10608	Cylinder #:	CAL016848
Concentration:	6.944 %	Concentration:	9.918 %
Exp. Date:	7/14/2018	Exp. Date:	6/1/2017
NIST Sample#	7-H-18	NIST Sample#	72-D-11

CERTIFICATION INSTRUMENTS

Component:	Carbon Dioxide	Component:	Oxygen
Make/Model:	HORIBA VIA 510	Make/Model:	HORIBA MPA 510
Serial Number:	41679080021	Serial Number:	U1LSAGS6
Measurement Principle:	NDIR	Measurement Principle:	PARAMAGNETIC
Last Calibration:	10/14/2015	Last Calibration:	10/13/2015

Notes:

The certification was performed according to EPA Traceability Protocol for Assay and Certification of Gaseous Calibration Standards May 2012, using procedure G1 and/or G2. U.S EPA Vendor ID Number: D62015, PGVP Participation Date: 01/01/15, PGVP Renewal Date: 01/01/16
The expanded uncertainty listed for each component was calculated at a coverage factor of k=2 and at a level of confidence of 95%.

Analyst: Ashley Stokes

Ashley Stokes

Date: 10/19/2015

MATHESON
ask. . .The Gas Professionals™

1700 Scepter Rd
Waverly, TN 37185
931-296-3357

Certificate of Analysis - EPA Protocol Mixtures

Customer: CST

		Protocol:	Reference #:	Lot#:
Cylinder Number:	SX48140	G1	T189541-5	9303607405
Cylinder Pressure:	1900psig			
Last Analysis Date:	11/13/2013			
Expiration Date:	11/14/2021			

DO NOT USE THIS CYLINDER WHEN THE PRESSURE FALLS BELOW 100 PSIG

			REPLICATE RESPONSES
Component:	Carbon Dioxide		Date: 11/13/2013
Certified Conc:	3.97% +/- 0.03%	ABS	3.98 3.97 3.97
Component:	Oxygen		Date: 11/13/2013
Certified Conc:	21.1% +/- 0.4%	ABS	21.1 21.1 21.0

BALANCE GAS: Nitrogen

REFERENCE STANDARDS:

Component:	Carbon Dioxide	Component:	Oxygen
Reference Standard:	PRM	Reference Standard:	SRM
Cylinder #:	D249735	Cylinder #:	CAL015730
Concentration:	19.793%	Concentration:	23.03%
Exp. Date:	4/4/2018	Exp. Date:	1/1/2016
NIST Sample #:	VSL PRIMARY	NIST Sample #:	71-D-36

CERTIFICATION INSTRUMENTS

Component:	Carbon Dioxide	Component:	Oxygen
Make/Model:	HORIBA VIA-510	Make/Model:	HORIBA MPA-510
Serial Number:	41679080021	Serial Number:	U1LSAGS6
Measurement Principle:	NDIR	Measurement Principle:	PARAMAGNETIC
Last Calibration:	10/30/2013	Last Calibration:	11/13/2013

Notes:

This Certification was performed according to EPA Traceability Protocol for Assay & Certification of Gaseous Calibration Standards May 2012 , using procedure G1 and/or G2.

U.S. EPA Vendor ID No.: D62013 PGVP Participation Date: 01/01/13: PGVP Renewal Date: 1/1/2014

Analyst: La'Shawn Grissom-Brown

La'Shawn Grissom-Brown

Date: 11/13/2013

Data Log Records
Unit #1

Time	Date	NOx PPMV	CO PPMV	O2 %VOL	CO2 %VOL	Event
7:30	1/20/16	0.26	0.13	0.01	0.01	**NOx Converter**
7:31	1/20/16	44.55	44.81	0.01	-0.01	**Efficiency Test**
7:32	1/20/16	85.74	82.99	0.01	-0.01	**Initial Linearity**
7:33	1/20/16	-0.11	-0.20	9.56	6.49	
7:34	1/20/16	0.44	-0.47	20.97	4.10	
7:35	1/20/16	49.02	-0.57	0.04	0.01	**Response Time /**
7:36	1/20/16	0.23	-0.12	0.00	-0.03	**Bias Check /**
7:37	1/20/16	43.67	44.80	0.00	-0.03	**Interference Test**
7:38	1/20/16	0.05	-0.24	9.57	6.45	
7:39	1/20/16	0.34	-0.61	-0.01	0.01	
7:40	1/20/16	66.96	13.09	16.80	2.41	**Stratification Test**
7:41	1/20/16	71.08	12.65	16.80	2.41	**Point 1**
7:42	1/20/16	70.91	12.61	16.79	2.41	
7:43	1/20/16	71.35	12.52	16.78	2.41	
7:44	1/20/16	70.57	12.44	16.78	2.43	
7:45	1/20/16	70.81	12.64	16.78	2.43	**Point 2**
7:46	1/20/16	69.75	13.29	16.78	2.43	
7:47	1/20/16	69.39	12.85	16.77	2.43	
7:48	1/20/16	69.95	12.76	16.77	2.45	
7:49	1/20/16	69.31	12.72	16.77	2.45	**Point 3**
7:50	1/20/16	69.98	13.29	16.76	2.46	
7:51	1/20/16	68.65	13.19	16.76	2.45	
7:52	1/20/16	68.61	13.78	16.76	2.46	
7:53	1/20/16	68.93	13.33	16.76	2.45	**Start Run 1**
7:54	1/20/16	68.05	13.98	16.77	2.45	
7:55	1/20/16	68.44	13.19	16.78	2.45	
7:56	1/20/16	67.22	13.41	16.79	2.45	
7:57	1/20/16	64.52	13.27	16.80	2.45	
7:58	1/20/16	64.48	13.18	16.80	2.45	
7:59	1/20/16	63.99	13.49	16.79	2.46	
8:00	1/20/16	64.96	13.06	16.78	2.46	
8:01	1/20/16	66.31	13.33	16.77	2.46	
8:02	1/20/16	67.47	13.16	16.77	2.46	
8:03	1/20/16	68.35	13.46	16.78	2.45	
8:04	1/20/16	66.12	13.31	16.78	2.46	
8:05	1/20/16	65.71	12.60	16.78	2.46	
8:06	1/20/16	65.72	12.51	16.78	2.46	
8:07	1/20/16	66.15	12.44	16.77	2.46	
8:08	1/20/16	67.26	14.07	16.77	2.46	
8:09	1/20/16	68.57	13.97	16.77	2.46	
8:10	1/20/16	66.10	13.88	16.76	2.48	
8:11	1/20/16	65.44	13.44	16.77	2.48	
8:12	1/20/16	63.77	14.34	16.75	2.52	
8:13	1/20/16	65.75	16.42	16.75	2.52	
Run 1 Average		**66.35**	**13.52**	**16.77**	**2.46**	

Time	Date	NOx PPMV	CO PPMV	O2 %VOL	CO2 %VOL	Event
8:14	1/20/16	0.36	-0.18	0.01	0.01	
8:15	1/20/16	43.90	44.07	0.01	-0.03	
8:16	1/20/16	0.34	-0.24	9.59	6.46	
8:17	1/20/16	67.69	9.65	16.80	2.55	
8:18	1/20/16	68.60	9.30	16.80	2.55	**Start Run 2**
8:19	1/20/16	68.60	9.30	16.79	2.55	
8:20	1/20/16	69.77	8.93	16.80	2.55	
8:21	1/20/16	70.88	8.99	16.80	2.55	
8:22	1/20/16	70.31	8.95	16.79	2.55	
8:23	1/20/16	71.37	8.90	16.79	2.53	
8:24	1/20/16	71.84	8.97	16.79	2.53	
8:25	1/20/16	71.39	8.60	16.79	2.53	
8:26	1/20/16	72.28	8.93	16.79	2.53	
8:27	1/20/16	72.21	8.58	16.79	2.53	
8:28	1/20/16	71.83	8.98	16.79	2.53	
8:29	1/20/16	72.31	8.97	16.79	2.53	
8:30	1/20/16	71.38	8.56	16.78	2.53	
8:31	1/20/16	72.64	8.60	16.79	2.53	
8:32	1/20/16	72.26	8.63	16.78	2.53	
8:33	1/20/16	71.81	8.23	16.79	2.53	
8:34	1/20/16	71.91	8.64	16.79	2.53	
8:35	1/20/16	71.32	8.94	16.79	2.53	
8:36	1/20/16	71.45	8.60	16.79	2.52	
8:37	1/20/16	69.78	8.61	16.79	2.53	
8:38	1/20/16	70.24	8.62	16.79	2.52	
Run 2 Average		**71.15**	**8.80**	**16.79**	**2.54**	
8:39	1/20/16	0.45	-0.34	0.01	0.01	
8:40	1/20/16	44.18	44.45	0.01	-0.03	
8:41	1/20/16	0.70	-0.48	9.60	6.50	
8:42	1/20/16	69.49	8.26	16.79	2.52	
8:43	1/20/16	69.55	8.40	16.79	2.53	**Start Run 3**
8:44	1/20/16	69.00	8.24	16.79	2.53	
8:45	1/20/16	70.87	7.92	16.79	2.53	
8:46	1/20/16	69.25	7.90	16.79	2.53	
8:47	1/20/16	69.25	7.89	16.79	2.54	
8:48	1/20/16	69.55	8.25	16.79	2.54	
8:49	1/20/16	69.22	7.94	16.79	2.53	
8:50	1/20/16	70.03	7.90	16.79	2.54	
8:51	1/20/16	68.83	7.89	16.78	2.54	
8:52	1/20/16	69.42	7.92	16.78	2.54	
8:53	1/20/16	68.77	7.88	16.78	2.53	
8:54	1/20/16	70.00	7.90	16.79	2.54	
8:55	1/20/16	69.62	7.54	16.78	2.53	
8:56	1/20/16	69.38	7.52	16.78	2.53	
8:57	1/20/16	68.86	7.16	16.79	2.54	
8:58	1/20/16	69.15	7.51	16.78	2.54	
8:59	1/20/16	69.90	7.17	16.78	2.53	
9:00	1/20/16	69.39	7.17	16.78	2.54	
9:01	1/20/16	70.06	7.57	16.78	2.54	
9:02	1/20/16	69.40	7.15	16.78	2.53	
9:03	1/20/16	69.72	7.18	16.78	2.53	
Run 3 Average		**69.49**	**7.71**	**16.79**	**2.53**	
9:04	1/20/16	0.73	-0.59	0.01	-0.01	
9:05	1/20/16	44.96	44.72	0.01	-0.03	
9:06	1/20/16	0.59	-0.31	9.60	6.53	

Data Log Records
Unit #2

Time	Date	NOx PPMV	CO PPMV	O2 %VOL	CO2 %VOL	Event
7:30	1/20/16	0.08	-0.15	0.00	-0.01	**NOx Converter**
7:31	1/20/16	0.21	-0.25	9.62	6.49	**Efficiency Test**
7:32	1/20/16	0.11	-0.05	21.12	3.99	**Initial Linearity**
7:33	1/20/16	44.14	44.95	-0.01	0.01	
7:34	1/20/16	84.78	83.93	-0.02	0.00	
7:35	1/20/16	49.35	-0.35	0.01	-0.02	**Response Time /**
7:36	1/20/16	0.32	-0.05	0.00	0.00	**Bias Check /**
7:37	1/20/16	0.37	-0.12	9.59	6.51	**Interference Test**
7:38	1/20/16	43.63	43.94	0.01	0.02	
7:39	1/20/16	0.02	-0.04	0.00	0.02	
7:40	1/20/16	71.19	11.95	17.38	1.92	**Stratification Test**
7:41	1/20/16	72.71	10.94	17.43	1.96	**Point 1**
7:42	1/20/16	72.35	10.94	17.46	1.97	
7:43	1/20/16	72.54	10.94	17.49	1.98	
7:44	1/20/16	72.15	10.94	17.51	1.97	
7:45	1/20/16	71.62	11.95	17.52	1.99	**Point 2**
7:46	1/20/16	69.86	17.94	17.52	1.99	
7:47	1/20/16	70.53	15.94	17.53	2.01	
7:48	1/20/16	70.63	15.95	17.53	2.02	
7:49	1/20/16	70.52	16.94	17.53	2.02	**Point 3**
7:50	1/20/16	71.00	16.95	17.53	2.05	
7:51	1/20/16	71.13	16.94	17.53	2.04	
7:52	1/20/16	71.03	16.96	17.52	2.05	
7:53	1/20/16	72.01	14.95	17.52	2.04	**Start Run 1**
7:54	1/20/16	72.23	12.94	17.53	2.02	
7:55	1/20/16	72.24	13.94	17.54	2.03	
7:56	1/20/16	72.10	14.95	17.54	2.03	
7:57	1/20/16	71.80	14.95	17.54	2.03	
7:58	1/20/16	71.86	14.95	17.54	2.03	
7:59	1/20/16	71.49	14.95	17.53	2.04	
8:00	1/20/16	71.30	14.96	17.55	2.02	
8:01	1/20/16	71.17	14.95	17.56	2.02	
8:02	1/20/16	71.06	14.95	17.57	2.01	
8:03	1/20/16	70.39	14.95	17.60	2.00	
8:04	1/20/16	70.18	12.94	17.62	1.99	
8:05	1/20/16	70.21	11.95	17.63	1.99	
8:06	1/20/16	70.23	11.95	17.63	1.97	
8:07	1/20/16	70.13	11.95	17.64	1.97	
8:08	1/20/16	69.49	12.94	17.64	1.96	
8:09	1/20/16	67.93	16.96	17.64	1.98	
8:10	1/20/16	67.51	18.95	17.64	1.99	
8:11	1/20/16	68.81	14.96	17.63	1.97	
8:12	1/20/16	68.66	15.95	17.63	1.97	
8:13	1/20/16	69.48	12.94	17.64	1.95	
Run 1 Average		**70.49**	**14.43**	**17.59**	**2.00**	

Time	Date	NOx PPMV	CO PPMV	O2 %VOL	CO2 %VOL	Event
8:14	1/20/16	0.37	-0.45	0.03	-0.03	
8:15	1/20/16	0.38	-0.39	9.63	6.46	
8:16	1/20/16	43.93	44.19	0.01	-0.02	
8:17	1/20/16	74.03	11.19	17.40	2.08	
8:18	1/20/16	73.80	11.18	17.41	2.10	**Start Run 2**
8:19	1/20/16	73.80	11.19	17.42	2.10	
8:20	1/20/16	73.75	11.19	17.43	2.09	
8:21	1/20/16	73.67	11.19	17.43	2.11	
8:22	1/20/16	73.57	11.19	17.44	2.09	
8:23	1/20/16	73.36	11.19	17.44	2.09	
8:24	1/20/16	73.69	12.20	17.44	2.09	
8:25	1/20/16	73.69	12.19	17.45	2.12	
8:26	1/20/16	73.77	12.20	17.45	2.09	
8:27	1/20/16	73.89	12.20	17.45	2.09	
8:28	1/20/16	73.73	12.20	17.45	2.10	
8:29	1/20/16	73.85	11.19	17.46	2.10	
8:30	1/20/16	73.71	11.19	17.46	2.10	
8:31	1/20/16	73.81	11.19	17.46	2.10	
8:32	1/20/16	73.68	12.20	17.46	2.10	
8:33	1/20/16	73.44	12.20	17.45	2.10	
8:34	1/20/16	74.03	12.20	17.46	2.10	
8:35	1/20/16	73.66	13.18	17.46	2.11	
8:36	1/20/16	73.72	12.20	17.46	2.10	
8:37	1/20/16	73.81	13.18	17.45	2.11	
8:38	1/20/16	73.94	13.19	17.45	2.10	
Run 2 Average		**73.73**	**11.91**	**17.45**	**2.10**	
8:39	1/20/16	0.63	-0.34	0.03	-0.03	
8:40	1/20/16	0.48	-0.52	9.62	6.44	
8:41	1/20/16	43.86	44.49	0.03	-0.01	
8:42	1/20/16	72.68	9.96	17.39	2.15	
8:43	1/20/16	72.63	9.96	17.39	2.15	**Start Run 3**
8:44	1/20/16	72.45	9.96	17.39	2.13	
8:45	1/20/16	72.26	9.95	17.40	2.15	
8:46	1/20/16	72.27	9.96	17.40	2.14	
8:47	1/20/16	72.24	9.87	17.40	2.14	
8:48	1/20/16	72.36	9.96	17.39	2.15	
8:49	1/20/16	72.61	9.96	17.39	2.14	
8:50	1/20/16	72.24	9.95	17.40	2.15	
8:51	1/20/16	72.21	9.96	17.39	2.15	
8:52	1/20/16	72.32	9.96	17.39	2.15	
8:53	1/20/16	72.28	9.96	17.39	2.14	
8:54	1/20/16	72.31	9.96	17.40	2.16	
8:55	1/20/16	72.25	8.95	17.40	2.14	
8:56	1/20/16	72.19	9.96	17.39	2.15	
8:57	1/20/16	72.06	8.95	17.39	2.14	
8:58	1/20/16	71.79	8.95	17.39	2.14	
8:59	1/20/16	72.34	8.95	17.38	2.14	
9:00	1/20/16	71.57	8.95	17.39	2.14	
9:01	1/20/16	72.02	8.95	17.38	2.15	
9:02	1/20/16	72.03	8.95	17.38	2.14	
9:03	1/20/16	72.21	8.95	17.38	2.14	
Run 3 Average		**72.22**	**9.57**	**17.39**	**2.14**	
9:04	1/20/16	0.87	-0.63	0.04	-0.04	
9:05	1/20/16	0.29	-0.66	9.66	6.43	
9:06	1/20/16	44.29	44.94	0.04	-0.04	

Particulate Matter Emission Estimates

Leslie Witherspoon
Solar Turbines Incorporated

PURPOSE

This document summarizes Solar's recommended $PM_{10/2.5}$ emission levels for our combustion turbines. The recommended levels are based on an analysis of emissions tests collected from customer sites.

Particulate Matter Definition

National Ambient Air Quality Standards (NAAQS) for particulate matter were first set in 1971. Total suspended particulate (TSP) was the first indicator used to represent suspended particles in the ambient air. Since July 1, 1987, the Environmental Protection Agency (EPA) has used the indicator PM_{10}, which includes only the particles with aerodynamic diameter smaller than 10 micrometers. PM_{10} (coarse particles) come from sources such as windblown dust from the desert or agricultural fields and dust kicked up on unpaved roads by vehicle traffic.

The EPA added a $PM_{2.5}$ ambient air standard in 1997. $PM_{2.5}$ includes particles with an aerodynamic diameter less than 2.5 micrometers. $PM_{2.5}$ (fine particles) are generally emitted from activities such as industrial and residential combustion and from vehicle exhaust. Fine particles are also formed in the atmosphere when gases such as sulfur dioxide, nitrogen oxides, and volatile organic compounds, emitted by combustion activities, are transformed by chemical reactions.

Nearly all particulate matter from gas turbine exhaust is less than one micrometer (micron) in diameter. Thus the emission rates of TSP, PM_{10}, and $PM_{2.5}$ from gas turbines are theoretically equivalent although source testing will show variation due to test method detection levels and processes.

TESTING FOR PARTICULATE MATTER

The turbine combustion process has little effect on the particulate matter generated and measured. The largest contributor to particulate matter emissions for gas and liquid fired combustion turbines is measurement technique and error. Other, minor contributing, sources of particulate matter emissions include carbon, ash, fuel-bound sulfur, artifact sulfate formation, compressor/lubricating oils, and inlet air.

Historical customer particulate matter source test data show that there is significant variability from test to test. The source test results support the common industry argument that particulate matter from natural gas fired combustion sources is difficult to measure accurately. The reference test methods for particulate matter were developed primarily for measuring emissions from coal-fired power plants and other major emitters of particulates. Particulate concentrations from gas turbine can be 100 to 10,000 times lower than the "traditional" particulate sources. The test methods were not developed or verified for low emission levels. There are interferences, insignificant at higher exhaust particulate matter concentrations that result in emissions greater than the actual emissions from gas turbines. New methods are being developed to address this problem.

Due to measurement and procedural errors, the measured results, in most cases, may not be representative of actual particulate matter emitted. There are many potential error sources in measuring particulate matter. Most of these have to do with contamination of the samples, material from the sampling apparatus getting into the samples, and general human error in samples and analysis.

Caterpillar Confidential Green: Information contained herein is to be treated as Confidential and Proprietary to Caterpillar.
© 2014 Solar Turbines Incorporated

Recommended Particulate Matter Emission Factors

When necessary to support the air permitting process Solar recommends the following $PM_{10/2.5}$ emission factors:

- Natural Gas: 0.015 lb/MMBtu fuel input (HHV)
- Landfill Gas: 0.03 lb/MMBtu fuel input (HHV)
- Liquid Fuel: 0.06 lb/MMBtu fuel input (HHV). The liquid fuel emission factor assumes fuel sulfur content is <500 ppm and ash content is <0.005% by wt.

The emission levels cited above are only for engine operation with the fuels listed. Other fuels may not yield similar results.

Recent customer source testing has shown that AP-42 (EPA AP-42 "Compilation of Air Pollutant Emission Factors.") emission factors for natural gas are achievable in the field, when the test method recommendations shown below are followed. Historically, Solar did not recommend using AP-42 because while some source test firms have measured below AP-42 levels, others have measured higher. Because particulate matter emissions levels are highly dependent on the test firm and have very little to do with the turbine, Solar does not warrant AP-42 levels but does recognize they are achievable in the field. Customers generally choose a particulate matter emissions factor at or above the AP-42 level that works for their site permitting recognizing that the lower the emissions factor the higher the risk for source testing. Any Solar warranty on particulate matter would be at the recommended levels above, e.g. 0.015 lb/MMBtu (HHV) for natural gas.

Test Method Recommendation

Solar recommends that EPA Methods 201/201A[1] be used to measure the “front half”. “Front half” represents filterable particulate matter.

EPA Method 202[2] (with nitrogen purge and field blanks) should be used to measure the “back half”. “Back half” measurements represent the condensable portion of particulate matter.

EPA Method 5[3], which measures the front and back halves may be substituted (e.g. where exhaust temperatures do not allow the use of Method 202).

Testing should include three test runs of 4 hours each.

Solar recommends using the aforementioned test methods until more representative test methods are developed and made commercially available.

References

[1] EPA Method 201, Determination of PM10 Emissions, Exhaust Gas Recycle Procedure. EPA Method 201A, Determination of PM10 Emissions, Constant Sampling Rate Procedure, 40 CFR 60, Part 60, Appendix A.

[2] EPA Method 202, Determination of Condensible Particulate Emissions from Stationary Sources, 40 CFR 60, Part 60, Appendix A.

[3] EPA Method 5, Determination of Particulate Emissions from Stationary Sources, 40 CFR 60, Part 60, Appendix

Solar Turbines Incorporated
9330 Sky Park Court
San Diego, CA 92123-5398

Cat and Caterpillar are registered trademarks of Caterpillar Inc. *Solar*, *Saturn*, *Centaur*, *Taurus*, *Mercury*, *Mars*, *Titan*, *SoLoNOx*, *Turbotronic*, *InSight System*, and *InSight Connect*, are trademarks of Solar Turbines Incorporated. All other trademarks are the intellectual property of their respective companies.

© 2014 Solar Turbines Incorporated. All rights reserved. Specifications are subject to change without notice.

Caterpillar Confidential Green: Information contained herein is to be treated as Confidential and Proprietary to Caterpillar.

© 2014 Solar Turbines Incorporated

Solar Turbines
A Caterpillar Company

PREDICTED EMISSION PERFORMANCE

Customer	Engine Model: CENTAUR 40-4700 CS/MD 80F MATCH
Job ID	
Inquiry Number	Fuel Type: SD NATURAL GAS; Water Injection: NO
Run By: Javier Marquez; Date Run: 9-Jul-20	Engine Emissions Data: REV. 1.2

	NOx EMISSIONS	CO EMISSIONS	UHC EMISSIONS
1 — 4111 HP, 100.0% Load, Elev. 3075 ft, Rel. Humidity 60.0%, Temperature 20.0 Deg. F			
PPMvd at 15% O2	165.00	50.00	50.00
ton/yr	112.54	20.76	11.89
lbm/MMBtu (Fuel LHV)	0.661	0.122	0.070
lbm/(MW-hr)	8.38	1.55	0.89
(gas turbine shaft pwr) lbm/hr	25.69	4.74	2.71
2 — 3583 HP, 100.0% Load, Elev. 3075 ft, Rel. Humidity 60.0%, Temperature 80.0 Deg. F			
PPMvd at 15% O2	165.00	50.00	50.00
ton/yr	100.38	18.52	10.61
lbm/MMBtu (Fuel LHV)	0.652	0.120	0.069
lbm/(MW-hr)	8.58	1.58	0.91
(gas turbine shaft pwr) lbm/hr	22.92	4.23	2.42

Notes

1. For short-term emission limits such as lbs/hr., Solar recommends using "worst c conditions specific to the application and the site conditions. Worst case for necessarily the same for another.
2. Solar's typical SoLoNOx warranty, for ppm values, is available for greater than and between 50% and 100% load for gas fuel, and between 65% and 100% load for the Centaur 40). An emission warranty for non-SoLoNOx equipment is available or -20 deg F and between 80% and 100% load.
3. Fuel must meet Solar standard fuel specification ES 9-98. Emissions are based composition, or, San Diego natural gas or equivalent.
4. If needed, Solar can provide Product Information Letters to address turbine ope warranty ranges, as well as non-warranted emissions of SO2, PM10/2.5, VOC, and
5. Solar can provide factory testing in San Diego to ensure the actual unit(s) mee the tolerances quoted. Pricing and schedule impact will be provided upon reque
6. Any emissions warranty is applicable only for steady-state conditions and does shut-down, malfunction, or transient event.

Solar Turbines
A Caterpillar Company

PREDICTED ENGINE PERFORMANCE

Customer	Model: CENTAUR 40-4700
Job ID	Package Type: CS/MD
Run By: Javier Marquez / Date Run: 9-Jul-20	Match: 80F MATCH
Engine Performance Code: REV. 4.20.1.25.13 / Engine Performance Data: REV. 2.1	Fuel System: GAS
	Fuel Type: SD NATURAL GAS

DATA FOR MINIMUM PERFORMANCE

Elevation	feet	3075
Inlet Loss	in H2O	3.5
Exhaust Loss	in H2O	2.0
Accessory on GP Shaft	HP	15.5

		1	2
Engine Inlet Temperature	deg F	20.0	80.0
Relative Humidity	%	60.0	60.0
Driven Equipment Speed	RPM	15500	15500
Specified Load	HP	FULL	FULL
Net Output Power	HP	4111	3583
Fuel Flow	mmBtu/hr	38.90	35.14
Heat Rate	Btu/HP-hr	9462	9809
Therm Eff	%	26.891	25.938
Engine Exhaust Flow	lbm/hr	143144	126652
PT Exit Temperature	deg F	771	850
Exhaust Temperature	deg F	771	850

Fuel Gas Composition (Volume Percent)

Methane (CH4)	92.79
Ethane (C2H6)	4.16
Propane (C3H8)	0.84
N-Butane (C4H10)	0.18
N-Pentane (C5H12)	0.04
Hexane (C6H14)	0.04
Carbon Dioxide (CO2)	0.44
Hydrogen Sulfide (H2S)	0.0001
Nitrogen (N2)	1.51

Fuel Gas Properties

LHV (Btu/Scf)	939.2	Specific Gravity	0.5970	Wobbe Index at 60F	1215.6

This performance was calculated with a basic inlet and exhaust system. Special noise silencers, special filters, heat recovery systems or cooling devices will Performance shown is "Expected" performance at the pressure drops stated, not g

Solar Turbines
A Caterpillar Company

PREDICTED EMISSION PERFORMANCE

Customer: **Enterprise**	Engine Model: **CENTAUR 40-4700S CS/MD 80F MATCH**
Job ID: **S.Carlsbad**	
Inquiry Number:	Fuel Type: **SD NATURAL GAS** / Water Injection: **NO**
Run By: **Jose Guillen** / Date Run: **1-Sep-20**	Engine Emissions Data: **REV. 0.1**

	NOx EMISSIONS	CO EMISSIONS	UHC EMISSIONS
1 — 4329 HP, 100.0% Load, Elev. 3070 ft, Rel. Humidity 60.0%, Temperature 0 Deg. F			
PPMvd at 15% O2	25.00	50.00	25.00
ton/yr	17.64	21.48	6.15
lbm/MMBtu (Fuel LHV)	0.100	0.122	0.035
lbm/(MW-hr)	1.25	1.52	0.44
(gas turbine shaft pwr) lbm/hr	4.03	4.90	1.40
2 — 4056 HP, 100.0% Load, Elev. 3070 ft, Rel. Humidity 60.0%, Temperature 40.0 Deg. F			
PPMvd at 15% O2	25.00	50.00	25.00
ton/yr	16.54	20.14	5.77
lbm/MMBtu (Fuel LHV)	0.100	0.122	0.035
lbm/(MW-hr)	1.25	1.52	0.44
(gas turbine shaft pwr) lbm/hr	3.78	4.60	1.32
3 — 3666 HP, 100.0% Load, Elev. 3070 ft, Rel. Humidity 60.0%, Temperature 80.0 Deg. F			
PPMvd at 15% O2	25.00	50.00	25.00
ton/yr	15.19	18.50	5.30
lbm/MMBtu (Fuel LHV)	0.099	0.120	0.034
lbm/(MW-hr)	1.27	1.54	0.44
(gas turbine shaft pwr) lbm/hr	3.47	4.22	1.21

Notes

1. For short-term emission limits such as lbs/hr., Solar recommends using "worst c conditions specific to the application and the site conditions. Worst case for necessarily the same for another.
2. Solar's typical SoLoNOx warranty, for ppm values, is available for greater than and between 50% and 100% load for gas fuel, and between 65% and 100% load for the Centaur 40). An emission warranty for non-SoLoNOx equipment is available or -20 deg F and between 80% and 100% load.
3. Fuel must meet Solar standard fuel specification ES 9-98. Emissions are based composition, or, San Diego natural gas or equivalent.
4. If needed, Solar can provide Product Information Letters to address turbine ope warranty ranges, as well as non-warranted emissions of SO2, PM10/2.5, VOC, and
5. Solar can provide factory testing in San Diego to ensure the actual unit(s) mee the tolerances quoted. Pricing and schedule impact will be provided upon reque
6. Any emissions warranty is applicable only for steady-state conditions and does shut-down, malfunction, or transient event.

Solar Turbines
A Caterpillar Company

PREDICTED EMISSION PERFORMANCE

Customer: **Enterprise**	Engine Model: **CENTAUR 40-4700S CS/MD 80F MATCH**
Job ID: **S.Carlsbad**	
Inquiry Number:	Fuel Type: **SD NATURAL GAS** / Water Injection: **NO**
Run By: **Jose Guillen** / Date Run: **1-Sep-20**	Engine Emissions Data: **REV. 0.1**

	NOx EMISSIONS	CO EMISSIONS	UHC EMISSIONS
4 — **3163 HP 100.0% Load** — **Elev. 3070 ft** — **Rel. Humidity 60.0%** — **Temperature 105.0 Deg. F**			
PPMvd at 15% O2	**25.00**	**50.00**	**25.00**
ton/yr	**13.55**	**16.50**	**4.72**
lbm/MMBtu (Fuel LHV)	**0.097**	**0.118**	**0.034**
lbm/(MW-hr)	**1.31**	**1.60**	**0.46**
(gas turbine shaft pwr) lbm/hr	**3.09**	**3.77**	**1.08**

Notes

1. For short-term emission limits such as lbs/hr., Solar recommends using "worst c conditions specific to the application and the site conditions. Worst case for necessarily the same for another.
2. Solar's typical SoLoNOx warranty, for ppm values, is available for greater than and between 50% and 100% load for gas fuel, and between 65% and 100% load for the Centaur 40). An emission warranty for non-SoLoNOx equipment is available or -20 deg F and between 80% and 100% load.
3. Fuel must meet Solar standard fuel specification ES 9-98. Emissions are based composition, or, San Diego natural gas or equivalent.
4. If needed, Solar can provide Product Information Letters to address turbine ope warranty ranges, as well as non-warranted emissions of SO2, PM10/2.5, VOC, and
5. Solar can provide factory testing in San Diego to ensure the actual unit(s) mee the tolerances quoted. Pricing and schedule impact will be provided upon reque
6. Any emissions warranty is applicable only for steady-state conditions and does shut-down, malfunction, or transient event.

Solar Turbines
A Caterpillar Company

PREDICTED ENGINE PERFORMANCE

Customer: *Enterprise*	Model: **CENTAUR 40-4700S**
Job ID: **S.Carlsbad**	Package Type: **CS/MD**
Run By: **Jose Guillen** / Date Run: **1-Sep-20**	Match: **80F MATCH**
Engine Performance Code: **REV. 4.20.1.25.13** / Engine Performance Data: **REV. 2.2**	Fuel System: **GAS**
	Fuel Type: **SD NATURAL GAS**

DATA FOR NOMINAL PERFORMANCE

Elevation	feet	3070
Inlet Loss	in H2O	4.0
Exhaust Loss	in H2O	4.0
Accessory on GP Shaft	HP	15.5

		1	2	3	4
Engine Inlet Temperature	deg F	0	40.0	80.0	105.0
Relative Humidity	%	60.0	60.0	60.0	60.0
Driven Equipment Speed	RPM	15500	15500	15500	15042
Specified Load	HP	FULL	FULL	FULL	FULL
Net Output Power	HP	4329	4056	3666	3163
Fuel Flow	mmBtu/hr	40.20	37.80	35.10	31.87
Heat Rate	Btu/HP-hr	9286	9321	9574	10075
Therm Eff	%	27.400	27.299	26.575	25.255
Engine Exhaust Flow	lbm/hr	147450	138006	126500	115569
PT Exit Temperature	deg F	754	800	852	876
Exhaust Temperature	deg F	754	800	852	876

Fuel Gas Composition (Volume Percent)

Methane (CH4)	92.79
Ethane (C2H6)	4.16
Propane (C3H8)	0.84
N-Butane (C4H10)	0.18
N-Pentane (C5H12)	0.04
Hexane (C6H14)	0.04
Carbon Dioxide (CO2)	0.44
Hydrogen Sulfide (H2S)	0.0001
Nitrogen (N2)	1.51

Fuel Gas Properties

LHV (Btu/Scf)	939.2	Specific Gravity	0.5970	Wobbe Index at 60F	1215.6

This performance was calculated with a basic inlet and exhaust system. Special noise silencers, special filters, heat recovery systems or cooling devices will Performance shown is "Expected" performance at the pressure drops stated, not g

Notes
3070 FT

Table 13.2.2-1. TYPICAL SILT CONTENT VALUES OF SURFACE MATERIAL ON INDUSTRIAL UNPAVED ROADS[a]

Industry	Road Use Or Surface Material	Plant Sites	No. Of Samples	Silt Content (%)	
				Range	Mean
Copper smelting	Plant road	1	3	16 - 19	17
Iron and steel production	Plant road	19	135	0.2 - 19	6.0
Sand and gravel processing	Plant road	1	3	4.1 - 6.0	4.8
	Material storage area	1	1	-	7.1
Stone quarrying and processing	Plant road	2	10	2.4 - 16	10
	Haul road to/from pit	4	20	5.0-15	8.3
Taconite mining and processing	Service road	1	8	2.4 - 7.1	4.3
	Haul road to/from pit	1	12	3.9 - 9.7	5.8
Western surface coal mining	Haul road to/from pit	3	21	2.8 - 18	8.4
	Plant road	2	2	4.9 - 5.3	5.1
	Scraper route	3	10	7.2 - 25	17
	Haul road (freshly graded)	2	5	18 - 29	24
Construction sites	Scraper routes	7	20	0.56-23	8.5
Lumber sawmills	Log yards	2	2	4.8-12	8.4
Municipal solid waste landfills	Disposal routes	4	20	2.2 - 21	6.4

[a]References 1,5-15.

The following empirical expressions may be used to estimate the quantity in pounds (lb) of size-specific particulate emissions from an unpaved road, per vehicle mile traveled (VMT):

For vehicles traveling on unpaved surfaces at industrial sites, emissions are estimated from the following equation:

$$E = k\,(s/12)^a (W/3)^b \quad (1a)$$

and, for vehicles traveling on publicly accessible roads, dominated by light duty vehicles, emissions may be estimated from the following:

$$E = \frac{k\,(s/12)^a (S/30)^d}{(M/0.5)^c} - C \quad (1b)$$

where k, a, b, c and d are empirical constants (Reference 6) given below and

E = size-specific emission factor (lb/VMT)
s = surface material silt content (%)
W = mean vehicle weight (tons)
M = surface material moisture content (%)
S = mean vehicle speed (mph)
C = emission factor for 1980's vehicle fleet exhaust, brake wear and tire wear.

The source characteristics s, W and M are referred to as correction parameters for adjusting the emission estimates to local conditions. The metric conversion from lb/VMT to grams (g) per vehicle kilometer traveled (VKT) is as follows:

1 lb/VMT = 281.9 g/VKT

The constants for Equations 1a and 1b based on the stated aerodynamic particle sizes are shown in Tables 13.2.2-2 and 13.2.2-4. The PM-2.5 particle size multipliers (k-factors) are taken from Reference 27.

Table 13.2.2-2. CONSTANTS FOR EQUATIONS 1a AND 1b

Constant	Industrial Roads (Equation 1a)			Public Roads (Equation 1b)		
	PM-2.5	PM-10	PM-30*	PM-2.5	PM-10	PM-30*
k (lb/VMT)	0.15	1.5	4.9	0.18	1.8	6.0
a	0.9	0.9	0.7	1	1	1
b	0.45	0.45	0.45	-	-	-
c	-	-	-	0.2	0.2	0.3
d	-	-	-	0.5	0.5	0.3
Quality Rating	B	B	B	B	B	B

*Assumed equivalent to total suspended particulate matter (TSP)
"-" = not used in the emission factor equation

Table 13.2.2-2 also contains the quality ratings for the various size-specific versions of Equation 1a and 1b. The equation retains the assigned quality rating, if applied within the ranges of source conditions, shown in Table 13.2.2-3, that were tested in developing the equation:

Table 13.2.2-3. RANGE OF SOURCE CONDITIONS USED IN DEVELOPING EQUATION 1a AND 1b

Emission Factor	Surface Silt Content, %	Mean Vehicle Weight		Mean Vehicle Speed		Mean No. of Wheels	Surface Moisture Content, %
		Mg	ton	km/hr	mph		
Industrial Roads (Equation 1a)	1.8-25.2	1.8-260	2-290	8-69	5-43	4-17[a]	0.03-13
Public Roads (Equation 1b)	1.8-35	1.4-2.7	1.5-3	16-88	10-55	4-4.8	0.03-13

[a] See discussion in text.

As noted earlier, the models presented as Equations 1a and 1b were developed from tests of traffic on unpaved surfaces. Unpaved roads have a hard, generally nonporous surface that usually dries quickly after a rainfall or watering, because of traffic-enhanced natural evaporation. (Factors influencing how fast a road dries are discussed in Section 13.2.2.3, below.) The quality ratings given above pertain to the mid-range of the measured source conditions for the equation. A higher mean vehicle weight and a higher than normal traffic rate may be justified when performing a worst-case analysis of emissions from unpaved roads.

The emission factors for the exhaust, brake wear and tire wear of a 1980's vehicle fleet (*C*) was obtained from EPA's MOBILE6.2 model [23]. The emission factor also varies with aerodynamic size range

average uncontrolled conditions (but including natural mitigation) under the simplifying assumption that annual average emissions are inversely proportional to the number of days with measurable (more than 0.254 mm [0.01 inch]) precipitation:

$$E_{ext} = E\ [(365 - P)/365] \quad (2)$$

where:

E_{ext} = annual size-specific emission factor extrapolated for natural mitigation, lb/VMT

E = emission factor from Equation 1a or 1b

P = number of days in a year with at least 0.254 mm (0.01 in) of precipitation (see below)

Figure 13.2.2-1 gives the geographical distribution for the mean annual number of "wet" days for the United States.

Equation 2 provides an estimate that accounts for precipitation on an annual average basis for the purpose of inventorying emissions. It should be noted that Equation 2 does not account for differences in the temporal distributions of the rain events, the quantity of rain during any event, or the potential for the rain to evaporate from the road surface. In the event that a finer temporal and spatial resolution is desired for inventories of public unpaved roads, estimates can be based on a more complex set of assumptions. These assumptions include:

1. The moisture content of the road surface material is increased in proportion to the quantity of water added;
2. The moisture content of the road surface material is reduced in proportion to the Class A pan evaporation rate;
3. The moisture content of the road surface material is reduced in proportion to the traffic volume; and
4. The moisture content of the road surface material varies between the extremes observed in the area. The CHIEF Web site (http://www.epa.gov/ttn/chief/ap42/ch13/related/c13s02-2.html) has a file which contains a spreadsheet program for calculating emission factors which are temporally and spatially resolved. Information required for use of the spreadsheet program includes monthly Class A pan evaporation values, hourly meteorological data for precipitation, humidity and snow cover, vehicle traffic information, and road surface material information.

It is emphasized that the simple assumption underlying Equation 2 and the more complex set of assumptions underlying the use of the procedure which produces a finer temporal and spatial resolution have not been verified in any rigorous manner. For this reason, the quality ratings for either approach should be downgraded one letter from the rating that would be applied to Equation 1.

13.2.2.3 Controls[18-22]

A wide variety of options exist to control emissions from unpaved roads. Options fall into the following three groupings:

1. Vehicle restrictions that limit the speed, weight or number of vehicles on the road;

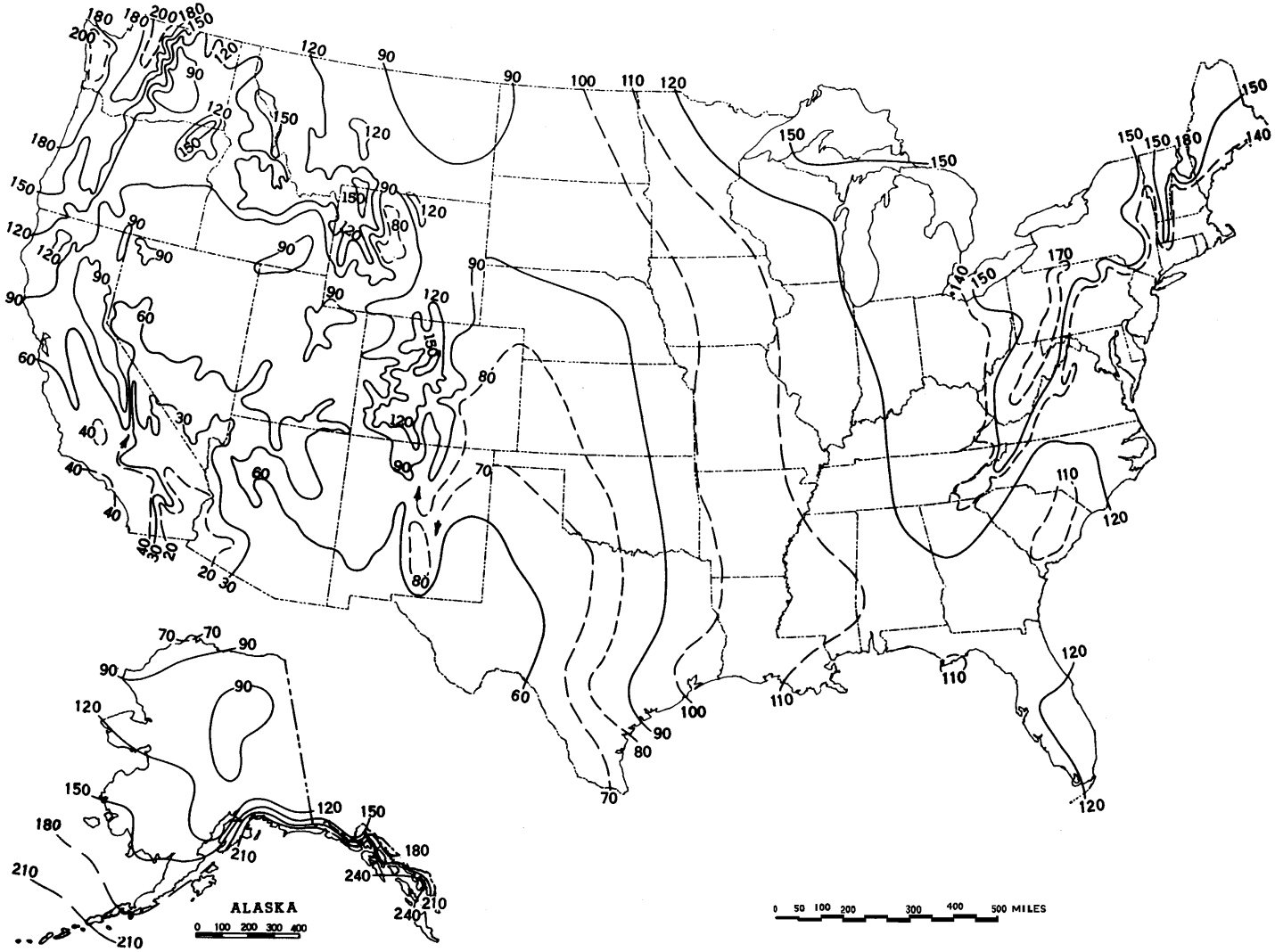

Figure 13.2.2-1. Mean number of days with 0.01 inch or more of precipitation in United States.

Since flares do not lend themselves to conventional emission testing techniques, only a few attempts have been made to characterize flare emissions. Recent EPA tests using propylene as flare gas indicated that efficiencies of 98 percent can be achieved when burning an offgas with at least 11,200 kJ/m^3 (300 Btu/ft^3). The tests conducted on steam-assisted flares at velocities as low as 39.6 meters per minute (m/min) (130 ft/min) to 1140 m/min (3750 ft/min), and on air-assisted flares at velocities of 180 m/min (617 ft/min) to 3960 m/min (13,087 ft/min) indicated that variations in incoming gas flow rates have no effect on the combustion efficiency. Flare gases with less than 16,770 kJ/m^3 (450 Btu/ft^3) do not smoke.

Table 13.5-1 presents flare emission factors, and Table 13.5-2 presents emission composition data obtained from the EPA tests.[1] Crude propylene was used as flare gas during the tests. Methane was a major fraction of hydrocarbons in the flare emissions, and acetylene was the dominant intermediate hydrocarbon species. Many other reports on flares indicate that acetylene is always formed as a stable intermediate product. The acetylene formed in the combustion reactions may react further with hydrocarbon radicals to form polyacetylenes followed by polycyclic hydrocarbons.[2]

In flaring waste gases containing no nitrogen compounds, NO is formed either by the fixation of atmospheric nitrogen (N) with oxygen (O) or by the reaction between the hydrocarbon radicals present in the combustion products and atmospheric nitrogen, by way of the intermediate stages, HCN, CN, and OCN.[2] Sulfur compounds contained in a flare gas stream are converted to SO_2 when burned. The amount of SO_2 emitted depends directly on the quantity of sulfur in the flared gases.

Table 13.5-1 (English Units). EMISSION FACTORS FOR FLARE OPERATIONS[a]

EMISSION FACTOR RATING: B

Component	Emission Factor ($lb/10^6$ Btu)
Total hydrocarbons[b]	0.14
Carbon monoxide	0.37
Nitrogen oxides	0.068
Soot[c]	0 - 274

[a] Reference 1. Based on tests using crude propylene containing 80% propylene and 20% propane.
[b] Measured as methane equivalent.
[c] Soot in concentration values: nonsmoking flares, 0 micrograms per liter (µg/L); lightly smoking flares, 40 µg/L; average smoking flares, 177 µg/L; and heavily smoking flares, 274 µg/L.

January 11, 2020

FESCO, Ltd.
105 Medical Dr. - Ozona,Texas 76943

For: Enterprise Field Services, LLC
P. O. Box 1508
Carlsbad, New Mexico 88221

Sample: South Carlsbad Gas Plant
Inlet to the Plant Gas
Spot Gas Sample @ 280 psig & 53 °F

Equipment: Normal Operating Conditions as per Customer
Date Sampled: 01/08/2020 @ 10:59 CST Job Number: 200013.104
COC No.: 3560

CHROMATOGRAPH EXTENDED ANALYSIS - GPA 2286

COMPONENT	MOL%	GPM
Hydrogen Sulfide*	< 0.001	
Nitrogen	1.313	
Carbon Dioxide	0.319	
Methane	80.464	
Ethane	10.387	2.771
Propane	4.642	1.276
Isobutane	0.609	0.199
n-Butane	1.341	0.422
2-2 Dimethylpropane	0.001	0.000
Isopentane	0.299	0.109
n-Pentane	0.304	0.110
Hexanes	0.163	0.067
Heptanes Plus	0.158	0.062
Totals	100.000	5.016

Computed Real Characteristics Of Heptanes Plus:

Specific Gravity	3.254	(Air=1)
Molecular Weight	93.94	
Gross Heating Value	4831	BTU/CF

Computed Real Characteristics Of Total Sample:

Specific Gravity	0.708	(Air=1)
Compressibility (Z)	0.9967	
Molecular Weight	20.44	
Gross Heating Value		
Dry Basis	1217	BTU/CF
Saturated Basis	1196	BTU/CF

*Hydrogen Sulfide tested on location by: Stain Tube Method (GPA 2377)
0.016 Gr/100 CF, 0.3 PPMV or <0.0001 Mol%

Detector Tube: Gastec 4LT 0.05 to 4.0 ppm (Meas. Range)
Base Conditions: 14.650 PSI & 60 Deg F

Sampled By: (08)McCollum
Analyst: JBM
Processor: BMc
Cylinder ID: X-0933

Certified: FESCO, Ltd. - Ozona, Texas

Tom Anderson 325-392-3773

Process Streams		Cond. B	Cond. W	Slop B	Slop W
Composition	**Status:**	Solved	Solved	Solved	Solved
Phase: **Vapor**	**From Block:**	--	--	--	--
	To Block:	--	--	--	--
Mass Flow		lb/h	lb/h	lb/h	lb/h
Hydrogen Sulfide		0	0	0	0
Nitrogen		0	0	0	0
Carbon Dioxide		4.81714E-12	5.06326E-12	9.90791E-16	3.56382E-15
Methane		8.17987E-14	8.59780E-14	1.68244E-17	6.05164E-17
Ethane		5.61920E-08	5.90630E-08	1.15576E-11	4.15720E-11
Propane		0.000295640	0.000310745	6.08073E-08	2.18720E-07
i-Butane		0.0211533	0.0222341	4.35082E-06	1.56497E-05
n-Butane		0.562185	0.590909	0.000115631	0.000415917
2,2-Dimethylpropane		0.0126659	0.0133130	2.60512E-06	9.37047E-06
i-Pentane		0.593853	0.624194	0.000122144	0.000439345
n-Pentane		0.536838	0.564267	0.000110417	0.000397164
2,2-Dimethylbutane		0.00518274	0.00544754	1.06599E-06	3.83430E-06
Cyclopentane		0	0	0	0
2,3-Dimethylbutane		0.0363321	0.0381884	7.47281E-06	2.68793E-05
2-Methylpentane		0.0838566	0.0881411	1.72477E-05	6.20389E-05
3-Methylpentane		0.0440194	0.0462685	9.05393E-06	3.25665E-05
n-Hexane		0.0766362	0.0805517	1.57626E-05	5.66971E-05
Methylcyclopentane		0.0352034	0.0370020	7.24065E-06	2.60442E-05
Benzene		0.00854433	0.00898088	1.75740E-06	6.32127E-06
Cyclohexane		0.0239256	0.0251480	4.92102E-06	1.77006E-05
2-Methylhexane		0.00606139	0.00637108	1.24671E-06	4.48434E-06
3-Methylhexane		0.00676702	0.00711276	1.39184E-06	5.00638E-06
2,2,4-Trimethylpentane		0	0	0	0
n-Heptane		0.0251696	0.0264556	5.17689E-06	1.86210E-05
Methylcyclohexane		0.0137544	0.0144572	2.82902E-06	1.01758E-05
Toluene		0.00287912	0.00302623	5.92179E-07	2.13004E-06
n-Octane		0.00615584	0.00647036	1.26614E-06	4.55422E-06
Ethylbenzene		0.000131317	0.000138026	2.70093E-08	9.71510E-08
m-Xylene		0.000120060	0.000126194	2.46939E-08	8.88227E-08
p-Xylene		0.000125494	0.000131906	2.58117E-08	9.28432E-08
o-Xylene		0	0	0	0
n-Nonane		0.000544887	0.000572726	1.12073E-07	4.03119E-07

Process Streams		Cond. B	Cond. W	Slop B	Slop W
Properties	**Status:**	Solved	Solved	Solved	Solved
Phase: **Vapor**	**From Block:**	--	--	--	--
	To Block:	--	--	--	--
Property	**Units**				
Temperature	°F	82.6768	82.6768	82.6768	82.6768
Pressure	psia	9.75052	9.75052	0.568983	0.568983
Mole Fraction Vapor	%	100	100	100	100
Mole Fraction Light Liquid	%	0	0	0	0
Mole Fraction Heavy Liquid	%	0	0	0	0
Molecular Weight	lb/lbmol	69.6863	69.6863	19.4093	19.4093
Mass Density	lb/ft^3	0.119713	0.119713	0.00189852	0.00189852
Std Vapor Volumetric Flow	MMSCFD	0.000274772	0.000288811	2.09476E-06	7.53472E-06
Std Liquid Volumetric Flow	sgpm	0.00673106	0.00707497	9.44417E-06	3.39702E-05
Compressibility		0.975200	0.975200	0.999435	0.999435
Specific Gravity		2.40609	2.40609	0.670154	0.670154
API Gravity					
Mass Cp	Btu/(lb*°F)	0.400239	0.400239	0.444343	0.444343
Ideal Gas CpCv Ratio		1.07725	1.07725	1.29931	1.29931
Dynamic Viscosity	cP	0.00719181	0.00719181	0.0100547	0.0100547
Kinematic Viscosity	cSt	3.75039	3.75039	330.622	330.622
Net Ideal Gas Heating Value	Btu/ft^3	3576.44	3576.44	96.4902	96.4902
Net Liquid Heating Value	Btu/lb	19326.7	19326.7	914.987	914.987
Gross Ideal Gas Heating Value	Btu/ft^3	3867.34	3867.34	153.291	153.291
Gross Liquid Heating Value	Btu/lb	20911.4	20911.4	2025.59	2025.59

Inlet Stream for F-001 (Gas)	
Component	**Mass Fraction (%)**
Hydrogen Sulfide	0
Nitrogen	3.538829845
Carbon Dioxide	3.280317616
Methane	57.05313454
Ethane	14.13458413
Propane	11.02638721
i-Butane	1.798158364
n-Butane	4.216596727
2,2-Dimethylpropane	0.033428867
i-Pentane	1.224412919
n-Pentane	1.279324499
2,2-Dimethylbutane	0.015859292
Cyclopentane	0
2,3-Dimethylbutane	0.138343572
2-Methylpentane	0.347523529
3-Methylpentane	0.19713613
n-Hexane	0.400739155
Methylcyclopentane	0.207266998
Benzene	0.085429758
Cyclohexane	0.187366259
2-Methylhexane	0.058323127
3-Methylhexane	0.067035915
2,2,4-Trimethylpentane	0
n-Heptane	0.305009246
Methylcyclohexane	0.164664219
Toluene	0.060471679
n-Octane	0.147028817
Ethylbenzene	0.004176951
m-Xylene	0.004116063
p-Xylene	0.004145743
o-Xylene	0
n-Nonane	0.02018884

Condensate Stream for F-001 (LL)	
Component	**Mass Fraction (%)**
Hydrogen Sulfide	0
Nitrogen	0
Carbon Dioxide	1.56E-12
Methane	3.41E-14
Ethane	2.94E-08
Propane	0.000634161
i-Butane	0.128229103
n-Butane	5.031456961
2,2-Dimethylpropane	0.158545918
i-Pentane	14.05103734
n-Pentane	17.18954573
2,2-Dimethylbutane	0.266527577
Cyclopentane	0
2,3-Dimethylbutane	2.563416485
2-Methylpentane	6.596582328
3-Methylpentane	3.881328456
n-Hexane	8.492380503
Methylcyclopentane	4.295514381
Benzene	1.519673324
Cyclohexane	4.138898529
2-Methylhexane	1.565672441
3-Methylhexane	1.873134659
2,2,4-Trimethylpentane	0
n-Heptane	9.463728444
Methylcyclohexane	5.067089098
Toluene	1.749635538
n-Octane	8.41525751
Ethylbenzene	0.244897106
m-Xylene	0.256298415
p-Xylene	0.249932323
o-Xylene	0
n-Nonane	2.800062758

Process Streams		SC Vapor
Composition	**Status:**	**Solved**
Phase: **Total**	**From Block:**	**V-8201**
	To Block:	**First Stage Compressor**
Mole Fraction		**%**
Hydrogen Sulfide		0
Nitrogen		2.72040
Carbon Dioxide		1.60514
Methane		76.5858
Ethane		10.1231
Propane		5.38529
i-Butane		0.666348
n-Butane		1.56272
2,2-Dimethylpropane		0.00998088
i-Pentane		0.365680
n-Pentane		0.382158
2,2-Dimethylbutane		0.00396908
Cyclopentane		0
2,3-Dimethylbutane		0.0346373
2-Methylpentane		0.0869974
3-Methylpentane		0.0493657
n-Hexane		0.100417
Methylcyclopentane		0.0531306
Benzene		0.0236183
Cyclohexane		0.0480196
2-Methylhexane		0.0125769
3-Methylhexane		0.0144867
2,2,4-Trimethylpentane		0
n-Heptane		0.0661237
Methylcyclohexane		0.0363511
Toluene		0.0142309
n-Octane		0.0284272
Ethylbenzene		0.000866152
m-Xylene		0.000846199
p-Xylene		0.000852961
o-Xylene		0
n-Nonane		0.00366520
n-Decane		0
n-Undecane		0

Process Streams		11
Composition	**Status:**	**Solved**
Phase: Vapor	**From Block:**	**MIX-102**
	To Block:	**Stab-Off Gas Suction**
Mass Flow		**lb/h**
Hydrogen Sulfide		0
Nitrogen		6.05600
Carbon Dioxide		14.1511
Methane		302.022
Ethane		396.811
Propane		850.564
i-Butane		240.437
n-Butane		626.047
2,2-Dimethylpropane		3.96168
i-Pentane		76.2225
n-Pentane		64.1347
2,2-Dimethylbutane		0.518399
Cyclopentane		0
2,3-Dimethylbutane		3.64221
2-Methylpentane		8.53074
3-Methylpentane		4.48824
n-Hexane		7.81511
Methylcyclopentane		4.07930
Benzene		1.56366
Cyclohexane		3.33121
2-Methylhexane		0.694155
3-Methylhexane		0.775936
2,2,4-Trimethylpentane		0
n-Heptane		3.15518
Methylcyclohexane		1.66868
Toluene		0.505030
n-Octane		0.954325
Ethylbenzene		0.0252741
m-Xylene		0.0235965
p-Xylene		0.0235656
o-Xylene		0
n-Nonane		0.0981057

Process Streams		11
Properties	**Status:**	**Solved**
Phase: Vapor	**From Block:**	**MIX-102**
	To Block:	**Stab-Off Gas Suction**
Property	**Units**	
Temperature	°F	94.3754
Pressure	psia	114.696
Mole Fraction Vapor	%	100
Mole Fraction Light Liquid	%	0
Mole Fraction Heavy Liquid	%	0
Molecular Weight	lb/lbmol	37.8745
Mass Density	lb/ft^3	0.802495
Std Vapor Volumetric Flow	MMSCFD	0.630595
Std Liquid Volumetric Flow	sgpm	11.2189
Compressibility		0.910424
Specific Gravity		1.30770
API Gravity		
Mass Cp	Btu/(lb*°F)	0.448998
Ideal Gas CpCv Ratio		1.14048
Dynamic Viscosity	cP	0.00940355
Kinematic Viscosity	cSt	0.731524
Net Ideal Gas Heating Valu	Btu/ft^3	1985.94
Net Liquid Heating Value	Btu/lb	19758.4
Gross Ideal Gas Heating Va	Btu/ft^3	2163.24
Gross Liquid Heating Value	Btu/lb	21534.9



October 2000
RG-109 (Draft)

Air Permit Technical Guidance for Chemical Sources:

Flares and Vapor Oxidizers

printed on recycled paper

Air Permits Division

TEXAS NATURAL RESOURCE CONSERVATION COMMISSION

Waste Stream	Destruction/Removal Efficiency (DRE)		
VOC	98 percent (generic) 99 percent for compounds containing no more than 3 carbons that contain no elements other than carbon and hydrogen in addition to the following compounds: methanol, ethanol, propanol, ethylene oxide and propylene oxide		
H_2S	98 percent		
NH_3	case by case		
CO	case by case		
Air Contaminants	**Emission Factors**		
thermal NO_x	steam-assist:	high Btu	0.0485 lb/MMBtu
		low Btu	0.068 lb/MMBtu
	other:	high Btu	0.138 lb/MMBtu
		low Btu	0.0641 lb/MMBtu
fuel NO_x	NO_x is 0.5 wt percent of inlet NH_3, other fuels case by case		
CO	steam-assist:	high Btu	0.3503 lb/MMBtu
		low Btu	0.3465 lb/MMBtu
	other:	high Btu	0.2755 lb/MMBtu
		low Btu	0.5496 lb/MMBtu
PM	none, required to be smokeless		
SO_2	100 percent S in fuel to SO_2		

*The only exeption ot this is if inorganics might be emitted from the flare. In the case of landfills, the AP-42 PM factor may be used. In other cases, the emissions should be based on the composition of the waste stream routed to the flare.

• Burners
• Flares
• Incinerators
• Combustion Rentals
• Aftermarket Products and Services

22151 East 91st Street
Broken Arrow, OK 74014 USA
Ph: +1-918-258-8551
Fx: +1-918-251-5519
www.zeeco.com
sales@zeeco.com

April 13, 2016

Enterprise Products
1100 Louisiana St
Houston, TX 77002

Attention: Jing Li

RE: South Carlsbad Flare
Zeeco Ref.: 2016-00271RE-01 Rev 1

Dear Mr. Li,

The hydrocarbon destruction efficiency for the UF-24-38 Flare system proposed in quote number 2016-00271RE-01 Rev 1 will be 99% or higher for C1-C3 compounds and 98% or higher for all other compounds given as long as the flare is operated and maintained within the design operating parameters and accepted industry standard practices for this type of equipment.

Sincerely,

Andrew Grider
Applications Engineer
Zeeco Combustion Rental & Rapid Response Group

Zeeco, Inc.
22151 E. 91st St.
Broken Arrow, Oklahoma 74014
Phone: (918) 258-8551 Fax: (918) 251-5519

DELIVER TO: **Jenessa Duncan** **DATE:** February 10, 2016

COMPANY: **Enterprise Products**

SENDERS NAME: Andrew Grider / Andrew_Grider@zeeco.com **PHONE:** (918) 893-8448

YOUR REFERENCE: Budgetary Low BTU Flare Quote **QUOTE #:** 2016-00271RE-01 Rev 1

Design Information (Estimated):

	Design - Upset Condition 1	Fuel Gas- Normal	Fuel Gas- High BTU	Fuel Gas- Low BTU	Design + Fuel Gas Low BTU
Gas MW (lb/mol)	33.27	19.42	20.58	18.76	30.40
Gas LHV (Btu/Scf)	6	1,033	1,086	986	200
Flow Rate (MScfd)	7,690*	1,793*	1,685*	1,901*	9,591*
Available Pressure (psig)	6.97	>6.97	>6.97	>6.97	6.97

Scope of Supply:

1. (1) 38’ OAH guy supported flare stack
2. (1) Utility (UF) flare tip w/ Integral Purge Reducing Velocity Seal
3. (1) Shepherd Ring
4. (1) Low Btu Windshield
5. (3) HSLF-Z-HEI Electric Ignition Pilot assembly with Retractable HEI & Type K Thermocouple
6. (1) Nema 4, Skid Mounted Pilot Ignition and Monitoring Panel
7. *(1) Optional Manual Knock Out Drum*

Required Utilities:

Pilot Fuel Gas:	65 Scfh Natural Gas at 15 Psig OR 25 Scfh Propane at 7 psig (per pilot)
Electricity:	120V / 1 Phase / 60 Hz
Shepherd Ring:	3.016 MMBtu/hr
*Enrichment Gas:	Flow rates for the 3 different fuel gas compositions are listed in the design information above. For the fuel gas that is being used, the specified flow rate is to be added to the gas being flared as far as possible upstream in the header in order to enrich the combined stream to a minimum required heating value of 200 Btu/SCF
Purge Gas:	435 Scfh of a gas that does not contain oxygen and will not go to its dew point at jobsite conditions

Equipment Description:

- Skid Mounted Guy Supported Flare Stack: The stack is mounted on a carbon steel skid that eliminates the need for a concrete foundation. The skid only needs to be set on firm, flat soil and anchored with the provided guy wires and screw anchors. Design wind speed for this type of installation is 90 mph.

- UF Flare Tip: The UF style flare tip provides high stability flaring while also ensuring reliability of the flame from purge all the way to max flow rates. Components located in the high heat zone will be made of 310SS or equivalent casting material. The flare tip will provide a VOC destruction efficiency of at least 98 wt%. An integral purge reducing velocity seal is also included to reduce the quantity of purge gas to prevent oxygen ingress through the flare tip at low rates.

- Shepherd Ring: A major key to obtaining high destruction efficiency with low Btu gases is to have a consistent ignition source circumferentially around the flare tip to ignite gases exiting the tip. High Btu flares usually have 3 pilots equally spaced around the tip and this is more than adequate. However, with low Btu flares three pilots are insufficient. This is a special concern with flares that are being enriched upstream. Not only do three pilots not provide the coverage required to ensure a cross sectional light off of flames across the tip. But with enriched gases, there is further danger of inadequate mixing of the gases and enrichment gas which can result in pilots being located in areas that do not have sufficient heating value to ignite. Addition of a Shepherd Ring to the flare tip has the same effect as adding an infinite number of pilots. The ring completely surrounds the exit of the tip and is drilled with burner ports that establish a "ring of fire" around the flare tip. The ring itself is lit with pilots but once the Shepherd Ring's fire has been established, it becomes the primary ignition source for the gases.

- Low BTU Windshield: Since gases have to be burned at very low velocities to ensure stable flames and meet national and state guidelines, the resultant flames are extremely vulnerable to atmospheric wind conditions. Even with only light to moderate wind conditions, flames can become unstable or be blown out. Addition of a Low Btu Windshield reduces the impact of wind on the flames. The addition of the low Btu windshield also helps capture a portion of the heat emitted as the gases are burned. This heat in turn helps produce higher destruction efficiencies by increasing the heat present at the tip exit which in turn promotes more consistent ignition of the gases.

- HSLF-HEI Ignition Pilot: The pilot is proven to stay lit in hurricane force weather conditions. Testing has shown that a stable flame is present even in wind speeds greater than 150 mph in addition to rainfall of over 10 inches per hour. The pilot will be equipped with a Type K thermocouple for continuous monitoring of the pilot status. The pilot also meets API 537 design requirements.

- Retractable Pilot Components: For ease of service, instead of retracting the entire pilot, only the components that need service are made retractable. This ensures that the location of the pilot with relation to the flare tip is maintained, ensuring proper ignition every time. The ignition probe and thermocouple are the only components that can need maintenance. Both components will be retractable so that maintenance can be performed without needing a shutdown of the flare or any special equipment.

- Automatic Ignition/Monitoring Panel: The automatic pilot ignition and monitoring panel will continuously monitor the pilot and attempt to relight if a pilot failure signal is received. The control panel (Nema 4 enclosure) will also be skid mounted.

- *Knock Out (KO) Drum* - For areas where liquid entrainment is possible in the flare header, we can offer a separate KO drum. The knock out drum will separate any liquids that condense as the flare gas moves through the header. The KO drum vessel comes complete with level gage and manual drain line. As an option, the drum can also be equipped with automatic liquid level monitoring, alarming and draining capabilities.

COMMERCIAL

BUDGETARY PURCHASE PRICING (+/- 15%):	**Unit**
Guy-Supported 38’ Tall Flare as Detailed (UF-24-38)	$100,000

OPTIONAL EQUIPMENT BUDGETARY PURCHASE PRICING (+/- 15%)	
4’ dia x 8’ length Manual KOD	$30,000

Freight: Prepaid and added to our invoice at cost + 15%

Shipping: Ex-works (Point of Manufacture) per Incoterms 2010

Schedule: The flare equipment offered can be readied for shipment within 6-8 weeks ARO. *Please contact Zeeco if your project requires a faster delivery.*

Storage: Zeeco will provide space for storage of each unit up to 2 months after notification of readiness to ship free of charge. If you require storage periods longer than 2 months, a fee of 1% of the equipment value will be charged per month until the equipment is moved off site.

Warranty: Length; 18 months from date of shipment or 12 months after startup, whichever condition occurs first. Refer to Zeeco terms and conditions of sale for further clarifications.

Pricing Validity: Pricing quoted is valid for 30 days.

Payment Schedule: Net 60 – 25% Upon Order Placement
75% Upon Notification of Readiness to Ship

Terms and Conditions: This proposal is contingent upon acceptance of Zeeco, Inc Standard Terms and Conditions of Sale (attached).

Zeeco Quotation Ref: 2016-00271RE-01 Rev. 0
Radiation At Grade Versus Distance From Stack Base
Stack Height = 38 ft ; Relative Humidity = 85%
Solar Radiation Included = 250 BTU/hr-ft^2 ; Wind Speed = 30 ft/s
Flare Tag No. = F-1 ; Operating Case = Upset Condition 1 + Fuel Gas Low BTU (9591 MSCFD)
Max Radiation = 554 BTU/hr-ft^2 @ 6 ft From Stack Base

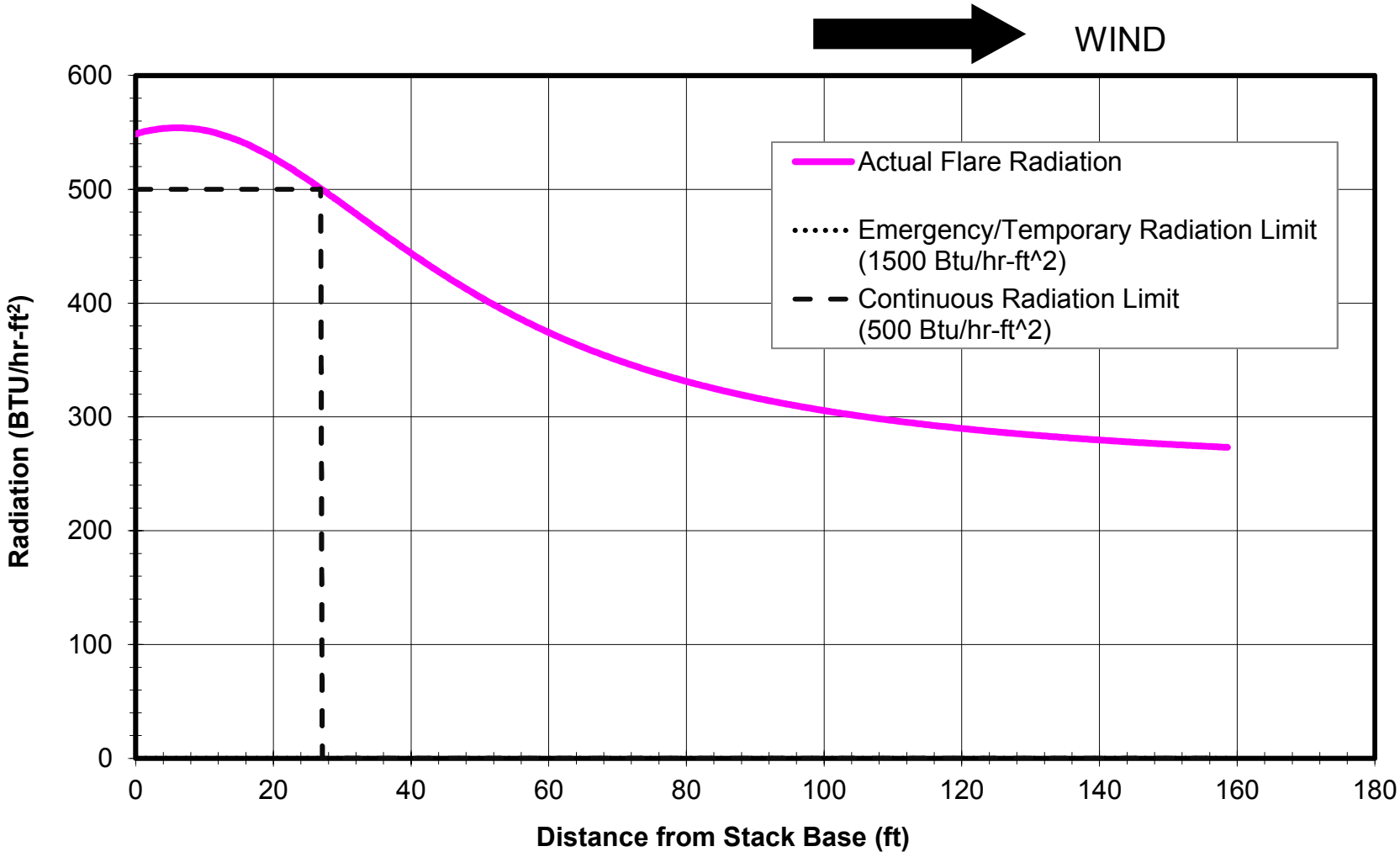

DRAFT

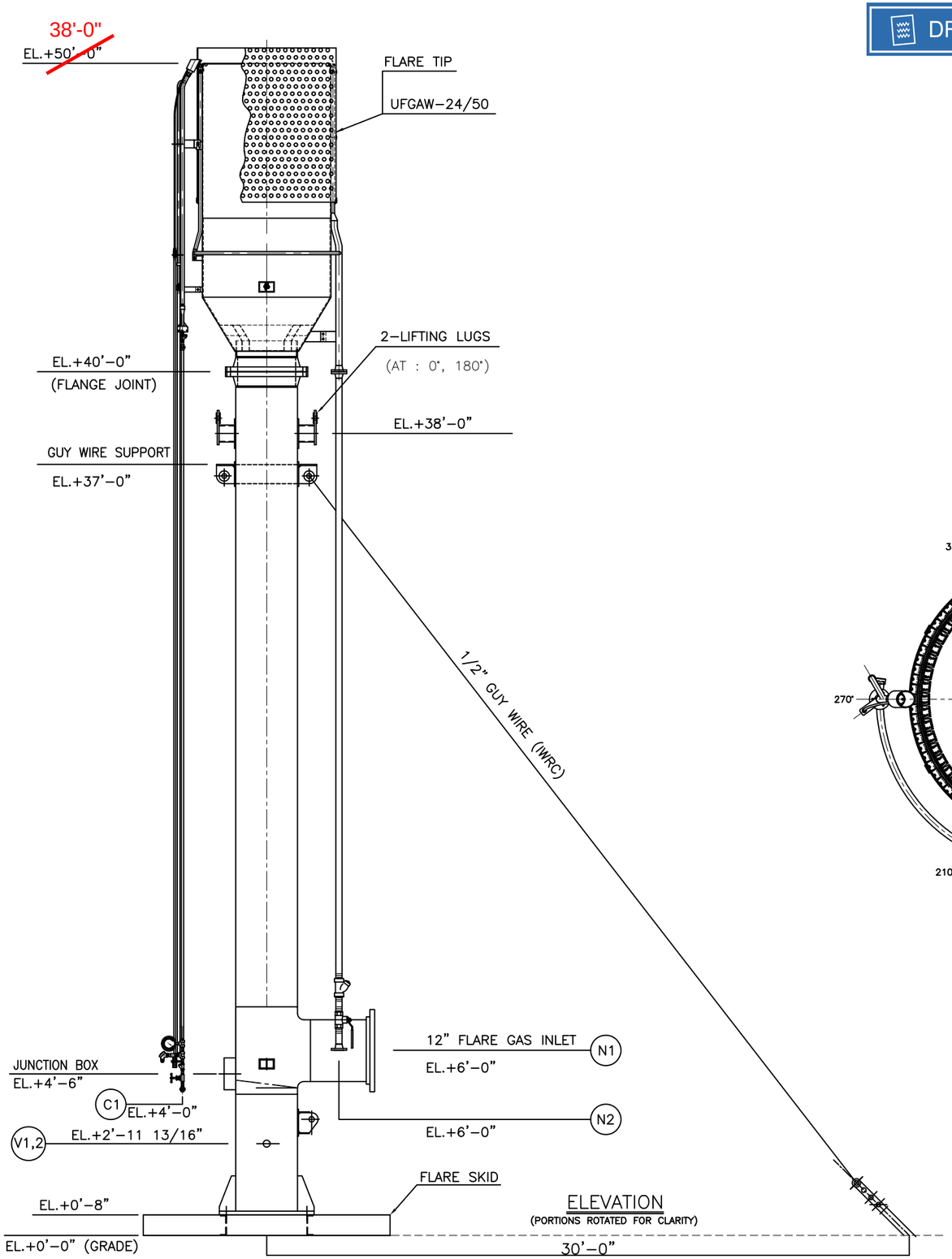

ELEVATION
(PORTIONS ROTATED FOR CLARITY)

PLAN VIEW
(TRUE ORIENTATION)

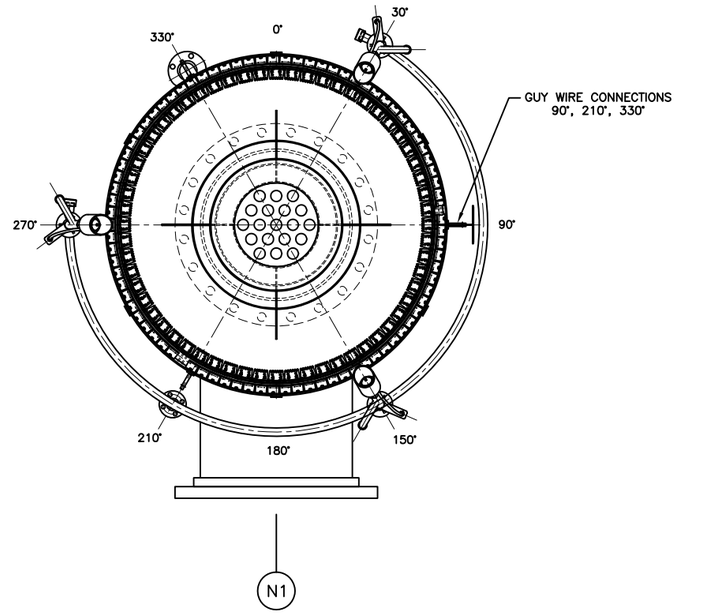

MATERIAL SPECIFICATIONS			
STACK RISER	A106-B	FLARE SKID	A36
SKIRT	A106-B		
FLARE TIP	SEE FLARE TIP		
FLANGE	A105		
STUD BOLT/NUT	A193-B7/A194-2H		
GASKET	C4401		
BASE BLOCK	A36		
SETTING BOLT	A307-B		
EARTH LUG	304 S.S		
NAME PLATE	304 S.S		
LIFTING LUG	A36		
TAILING LUG	-		
GUY WIRE LUG	A36		
GUY WIRE	IWRC		
UTILITY LINE	A106-B		
CONDUIT LINE	C.S (GALV.)		

DESIGN DATA		
TYPE	GUY WIRE SUPPORT TYPE	
DESIGN CODE	ASME STS-1	
WIND LOAD	ASCE 7-05	
SEISMIC LOAD	-	
FLUID	FLARE GAS	
DESIGN PRESS.	N/A	psig
DESIGN TEMP.	0° ~ 350°	°F
M.A.W.P.(NEW & COLD)	-	psig
OPERATING PRESS.	-	psig
OPERATING TEMP.	-	°F
HYDRO'C TEST PRESS.	-	psig
PNEUM'C TEST PRESS.	-	psig
P.W.H.T.	(NO)	
RADIOGRAPH	AS PER ITP, (SPOT)	
JOINT EFFICIENCY	85	%
CORROSION ALLOWANCE	N/A	
PAINTING	SEE NOTE 6	

NOZZLE AND CONNECTIONS

MARK	Q'TY	SIZE	SCH.	RATING	FACING	SERVICE	REMARKS	℄ TO FACE	PIPING SPEC.
N1	1	12"	STD.	ASME #150	WN, RF	FLARE GAS INLET		SEE DWG.	
N2	1	2"	STD.	ASME #150	WN, RF	ASSIST GAS INLET	ORIEN.: 180°	SEE DWG.	
V1,2	2	4"	40	-	-	VENT		SEE DWG.	
C1	1	1"	40	ASME #150	SW, RF	PILOT GAS		SEE DWG.	

NOTE

1. PILOT MIXER ORIFICE DRILLED: 3/64" DIA
2. PILOT GAS CONSUMPTION: 65 SCFH @ 15 PSIG PER PILOT
3. PILOT ORIFICE DRILLING BASED ON 1000 BTU/SCF (LHV) GAS WITH 0.6 SP. GR.
4. THE FLARE TIP REQUIRES A MINIMUM CONTINUOUS PURGE RATE OF 45 SCFH OF A GAS THAT WILL NOT GO TO DEW POINT AT OPERATING TEMPERATURES TO ENSURE AIR DOES NOT MIGRATE DOWN THE FLARE STACK. IT SHOULD BE NOTED THAT DEPENDING UPON THE TURNDOWN OPERATION OF THE FAN AND THE TYPE OF PURGE GAS USED IT MAY BENECESSARY TO INCREASE THIS MINIMUM PURGE RATE TO ENSURE PROPER COMBUSTION OF THE PURGE GAS DURING IDLE OPERATION.
5. ALL FLANGE BOLTING TO STRADDLE NORMAL CENTERLINES.
6. ALL EXTERNAL CARBON STEEL SURFACES TO BE PREPARED PER SSPC-SP6. PRIME WITH ONE COAT INORGANIC ZINC (2 1/2 MILS DFT MIN.) PAINT ONE COAT HIGH TEMP ALUMINUM (1 MIL DFT MIN.)
7. THE PILOT THERMOCOUPLE IS FOR ON/OFF INDICATION ONLY, NOT FOR ACCURATE PILOT FLAME MEASUREMENT.
8. FLAME ARRESTOR (IF APPLICABLE) SHALL BE MOUNTED DIRECTLY TO GAS INLET NOZZLE – NO PIPING ALLOWED BETWEEN FLAME ARRESTOR AND FLARE GAS INLET NOZZLE.

NO.	DATE	REVISION DESCRIPTION	BY	CKD.	APP.
1	21OCT15	REVISED PER AS BUILT	JTO	CJM	JTO

ZEECO, INC.
22151 EAST 91st STREET
BROKEN ARROW, OK 74014
PHONE: (918) 258-8551
FAX: (918) 251-5519
www.zeeco.com
sales@zeeco.com

PROPRIETARY DATA IS INCLUDED IN THE INFORMATION DISCLOSED HEREIN AND IS THE PROPERTY OF ZEECO,INC. THIS INFORMATION IS SUBMITTED IN CONFIDENCE AND MUST BE USED IN CONNECTION WITH WORK DONE FOR ZEECO, INC. AND ALL RIGHTS OF DESIGN OR INVENTION ARE RESERVED. UNAUTHORIZED DISCLOSURE OR USE IS PROHIBITED BY LAW.

GUY WIRE SUPPORTED FLARE STACK SYSTEM GENERAL ARRANGEMENT

FOR:

DRAWN SK	DATE 01SEP15
CHK MN	APP JO
SCALE NTS	REV 1
DRAWING NUMBER SD-3224 SHT. 1 OF 2	

ATTACHMENT A

START-UP/MAINTENANCE SERVICES, EQUIPMENT DATA/DRAWINGS AND STANDARD TERMS AND CONDITIONS

I. START-UP/MAINTENANCE SERVICES

RATES	DOMESTIC (Within US)	FOREIGN (Outside US)
Base Rates for Start-Up/Maintenance personnel on all non-holiday (U.S Government recognized) Monday through Friday, inclusive, up to a maximum of ten (10) hours per day.	$1,600.00 per day	2,300.00 per day
Hours in Excess of ten (10) hours per day Monday through Friday, non-holiday.	$240.00 per hour	$345.00 per hour
Saturdays and Sundays - up to a maximum of ten (10) hours per day	$2,400.00	$3,450.00
Hours in Excess of ten (10) hours per day Saturday and Sunday, non-holiday	$368.00 per hour	$518.00 per hour
Holidays (U.S. Government Recognized) - up to a maximum of ten (10) hours per day	$3,200.00	$4,600.00
Hours in Excess of ten (10) hours per day Holidays	$480.00 per hour	$690.00 per hour
Air Travel (Class) **Ground Transportation**	Coach Mid-Sized Rental Car	Business Mid-Sized Rental Car
Engineering Rates	$375.00 per hour	$375.00 per hour
Design / Drafting Rates	$185.00 per hour	$185.00 per hour

*** The above Domestic and Foreign rates do not include OFFSHORE assistance. Please contact Zeeco if you are interested in obtaining a proposal for OFFSHORE assistance*

Compensable Days

Per diem rates will apply from, and including, the day the start-up/maintenance personnel leaves his basing point up to, and including, his date of return to the basing point.

Expenses

Zeeco shall be reimbursed at actual cost plus 15% for all non-Buyer provided living and travel expenses incurred, which are related to the supply of services rendered.

Engineering / Drafting Charges

Engineering and/or drafting charges will apply for all work performed by Zeeco personnel as required to support Start-Up/Maintenance personnel. These charges will apply at the rate indicated in the chart above.

Independent Contractor

Zeeco personnel shall be considered an independent contractor with respect to services provided hereunder and the start-up/maintenance personnel shall in no respect be considered an employee of the Buyer. Zeeco reserves the right to recall, replace, or return the personnel at Zeeco's sole discretion.

II. EQUIPMENT DATA/DRAWINGS

A. STANDARD QUANTITY

Priced quotation for equipment include three (3) print copies of approval drawings; three (3) print copies and one (1) reproducible copy of the final drawings; and three (3) copies of an operational manual. Additional copies of drawings will be provided at $30.00 per print and $45.00 per reproducible. Additional operational manuals will be prices on application, and based on the complexity of the equipment.

Drawings and data provided hereunder are the property of Zeeco, Inc. and may not be used for any purpose other than the repair, operation and maintenance of the equipment depicted.

III. TERMS AND CONDITIONS

A. All service and data provided under this Attachment are in accordance with Zeeco's Standard Terms and Conditions of Sale.
B. All rates quoted herein are subject to change without notice.
C. Zeeco will require a purchase order from the Buyer accepting the terms and condition set forth herein, as well as an estimate of duration and nature of the work to be done.
D. Prior to dispatch of Zeeco personnel, Buyer may be required to provide a deposit equal to the charges for the anticipated duration of service, or two weeks of service, whichever is greater. This requirement will be enforced at the discretion of Zeeco, Inc.
E. The transportation modes and carriers and all arrangements therefore, and the choice of lodgings and all arrangements therefore, will be at the sole discretion of Zeeco, Inc.
F. Where on-site room and board are furnished by the customer, Zeeco, Inc. expects their personnel to be roomed and boarded in a comfortable environment similar to Buyer's personnel or mutually agreed upon accommodations.
G. It is the Buyer's responsibility to secure all work permits, licenses, and other documents required to allow our personnel to complete their assignment in accordance with local government regulations and labor laws.
H. All tools, materials, and equipment for use by Zeeco personnel will be furnished by the Buyer, unless other mutually agreed upon arrangements have been made.
I. The service rates and expenses described herein do not include any taxes of any kind that may be assessed by any governmental department outside the U.S.A. Any such taxes that may be applicable to the service rates and expenses will be for the Buyer's account.

THE SALE OF SERVICES (THE "SERVICES"), AS DESCRIBED IN CONTRACTOR'S QUOTATION OR PROPOSAL (THE "PROPOSAL"), IS EXPRESSLY CONDITIONED UPON BUYER'S AGREEMENT TO THESE TERMS & CONDITIONS. ANY ADDITIONAL OR DIFFERENT TERMS PROPOSED BY BUYER ARE EXPRESSLY OBJECTED TO AND WILL NOT BE BINDING UPON CONTRACTOR UNLESS AGREED TO IN WRITING BY CONTRACTOR. ANY PURCHASE ORDER (THE "ORDER") ISSUED BY BUYER FOR THE PURCHASE OF SERVICES SHALL CONSTITUTE BUYER'S AGREEMENT TO THESE TERMS & CONDITIONS. UNLESS OTHERWISE SPECIFIED IN THE PROPOSAL OR THE ORDER, ANY PROPOSAL BY CONTRACTOR SHALL EXPIRE THIRTY (30) DAYS FROM ITS DATE AND MAY BE MODIFIED OR WITHDRAWN BY CONTRACTOR BEFORE RECEIPT OF BUYER'S ACCEPTANCE. UNLESS OTHERWISE STATED, THE CONTRACTOR SHALL BE ZEECO, INC., 22151 EAST 91ST STREET, BROKEN ARROW, OKLAHOMA 74014 (USA), AND THE BUYER SHALL BE THE PARTY IDENTIFIED AS SUCH ON THE ORDER.

1. PRICE: Unless otherwise stated in the Proposal, the price of the Order (the "Price") is exclusive of all taxes, duties, fees, charges or assessments of any nature levied by any governmental authority. Payment terms shall be as stated in the Proposal and Contractor's acceptance of the Order is subject to credit approval.

2. LIMITED WARRANTY: Contractor warrants the Services will be performed in a workmanlike manner. The warranty on Services shall be for a period of three (3) months following completion of the Services (the "Service Warranty Period"). Contractor agrees during the Service Warranty Period, to re-perform any defective Services; provided that Buyer shall promptly notify Contractor in writing upon the discovery of any defect and specify details of the warranty claim. Contractor warrants all parts manufactured by Contractor and sold in conjunction with the Services (the "Goods") will be free from defects in material and workmanship for a period of twelve (12) months from the date of installation (the "Goods Warranty Period") when subjected to normal, proper and intended usage by properly trained personnel. Contractor agrees during the Goods Warranty Period, to repair or replace any defective Goods; provided that Buyer shall promptly notify Contractor in writing upon the discovery of any defect and specify details of the warranty claim. Goods that are obtained by Contractor from an original manufacturer or third party supplier are not warranted by Contractor, but Contractor will, to the extent possible, assign to Buyer any warranty rights in such Goods that Contractor received from the original manufacturer or third party supplier. Consumables such as, but not limited to, bulbs, fuses, thermocouples, gaskets, and similar items are outside the scope of this warranty. All responsibility for and costs of removal and/or reinstallation of warranted Goods as well as the cost of and responsibility for gaining access to the warranted Goods, are excluded from this warranty. This warranty shall be void if the Goods have been: (a) exposed to corrosion, erosion, or chemical attack; (b) operated contrary to Contractor's instructions or accepted industry practices; (c) improperly maintained or operated, or subjected to accident, abuse, or vandalism; or (d) operated in conditions other than those stated in Buyer's written specifications. Additionally, this warranty shall be void if the Buyer is not in compliance with its payment obligations to Contractor pursuant to the Order. Contractor shall have no obligation to make repairs, replacements or corrections resulting from normal wear and tear to the Goods. If Contractor determines that a warranty claim is not valid, then Buyer shall pay or reimburse Contractor for all costs of investigating and responding to such claim, including non-warranty parts sold or installed, at Contractor's then prevailing time and materials rates. THE OBLIGATIONS CREATED BY THIS WARRANTY TO REPERFORM DEFECTIVE SERVICES, OR REPAIR OR REPLACE DEFECTIVE GOODS, SHALL BE THE SOLE REMEDY OF BUYER IN THE EVENT OF A WARRANTY CLAIM. CONTRACTOR MAKES NO WARRANTY, EITHER EXPRESS OR IMPLIED, OTHER THAN AS STATED HEREIN. CONTRACTOR DISCLAIMS ALL IMPLIED WARRANTIES.

3. BACKCHARGES: No backcharges will be paid or allowed by Contractor unless Contractor is notified in writing of any claim of defect and Contractor is given a minimum of thirty (30) days within which to begin remediation of such defect. All backcharges must be approved in writing by Contractor before any Services are reperformed and charged to Contractor's account or any Goods are repaired, replaced or altered in any manner by Buyer or returned to Contractor.

4. TERMINATION FOR DEFAULT: Buyer may declare Contractor in default only if: (a) Contractor breaches a material provision of the Order; (b) Buyer provides Contractor thirty (30) days written notice specifying Contractor's alleged breach in detail; and (c) Contractor fails to reasonably cure such alleged breach with the thirty (30) day period following Contractor's receipt of Buyer's written notice. In the event of Contractor's uncured default, Buyer's sole remedy shall be to terminate the Order and recover any payments made to Contractor for the Order.

5. INDEMNITY: Contractor shall be responsible for any illness, injury or death, of the employees of the Contractor, its subsidiaries, and their officers, directors, employees, agents, and contractors (collectively, the "Contractor Group") and for the loss or damage to the property of any member of the Contractor Group, arising out of or relating to the performance of this Order and REGARDLESS OF WHETHER CAUSED OR BROUGHT ABOUT BY THE NEGLIGENCE (INCLUDING ACTIVE, PASSIVE, SOLE, JOINT OR CONCURRENT NEGLIGENCE) OF THE BUYER, ITS SUBSIDIARIES AND ITS CUSTOMER OR ULTIMATE RECIPIENT OR USER OF THE GOODS OR SERVICES AND THEIR OFFICERS, DIRECTORS, EMPLOYEES, AGENTS AND CONTRACTORS (COLLECTIVELY, THE "BUYER GROUP") OR ANY OTHER THEORY OF LEGAL LIABILITY, and Contractor shall release, defend, protect, indemnify and hold harmless all members of the Buyer Group from and against any loss, cost, claim, suit, judgment, award or damage (including reasonable attorney's fees) on account of such illness, injury or death, loss or damage. In exchange, Buyer shall be responsible for any illness, injury or death, of the employees of any member of the Buyer Group and for the loss or damage to the property of any member of the Buyer Group, arising out of or relating to the performance of this Order and REGARDLESS OF WHETHER CAUSED OR BROUGHT ABOUT BY THE NEGLIGENCE (INCLUDING ACTIVE, PASSIVE, SOLE, JOINT OR CONCURRENT NEGLIGENCE) OF ANY MEMBER OF THE CONTRACTOR GROUP OR ANY OTHER THEORY OF LEGAL LIABILITY, and Buyer shall release, defend, protect, indemnify and hold harmless all members of the Contractor Group from and against any loss, cost, claim, suit, judgment, award or damage (including reasonable attorney's fees) on account of such illness, injury or death, loss or damage. Contractor and Buyer shall each release, defend, protect, indemnify and hold harmless each other, and the applicable members of the Contractor Group or Buyer Group, from and against any loss, cost, claim, suit, judgment, award or damage (including reasonable attorney's fees) for illness, injury, death, or damage to property of third parties (not included within the definitions of Contractor Group or Buyer Group) but only to the extent caused by the negligent acts or omissions of such party. Contractor shall have no indemnity obligations to Buyer under this Section if the Buyer is not in compliance with its payment obligations to Contractor pursuant to the Order. Should any of the preceding indemnities be judged unenforceable or be limited by applicable law, then each party's indemnity obligations to the other shall be limited to the extent that liability for any such illness, injury, death or damage to property is caused by the negligent acts or omissions of such party.

6. INSURANCE: Contractor shall maintain the following insurance coverage and, at Buyer's request, shall provide Buyer with certificates evidencing such coverage: (a) Statutory Workers' Compensation and Employer's Liability Insurance with limits of USD $1,000,000 per occurrence; (b) Commercial General Liability Insurance with a combined single limit for bodily injury and property damage of USD $1,000,000 per occurrence and in the aggregate; and (c) Automobile Liability Insurance with a combined single limit for bodily injury and property damage of USD $1,000,000 per accident.

7. GOVERNING LAW: To the maximum extent permissible, this Order shall be governed and construed in accordance with the laws of the State of Oklahoma (U.S.A.), exclusive of any principles of conflicts of laws that would require application of the substantive laws of another jurisdiction. The exclusive venue for all legal actions under this Order shall be the State or Federal Courts sitting in Tulsa, Oklahoma (U.S.A.), and the parties submit to the personal jurisdiction thereof and waive any other venue that may be applicable to such action.

8. FORCE MAJEURE: Except for Buyer's obligations to pay sums to Contractor when due, neither party shall be liable for its failure to perform obligations under the Order if such failure results from fire, flood, earthquake, storm, hurricane or other natural disaster, war, invasion, act of foreign enemies, rebellion, terrorist activities, nationalization, government sanction, blockage, embargo, or interruption or failure of electricity, water, telephone or utility service.

9. ASSIGNMENT: Buyer shall not assign the Order without the prior written consent of Contractor, and such consent shall not be unreasonably withheld; however, any assignment shall not relieve Buyer of its payment and indemnity obligations to Contractor.

10. ENFORCEABILITY: Should a court of competent jurisdiction rule that any provision herein is invalid or unenforceable, such ruling shall not affect the validity or enforceability of any other provision.

11. WAIVER: Contractor's failure to enforce any provisions herein shall not constitute a waiver of such rights, or preclude their later enforcement.

12. WAIVER OF CONSEQUENTIAL DAMAGES: CONTRACTOR SHALL NOT BE LIABLE FOR PUNITIVE, INDIRECT, INCIDENTAL OR CONSEQUENTIAL DAMAGES, INCLUDING, BUT NOT LIMITED TO, LIABILITY FOR REMOVAL AND REINSTALLATION COSTS, LOSS OF USE, LOSS OF BUSINESS OPPORTUNITY, LOSS OF PROFIT OR REVENUE, LOSS OF PRODUCT OR OUTPUT, OR BUSINESS INTERRUPTION.

13. LIMITATION OF LIABILITY: ANYTHING TO THE CONTRARY CONTAINED IN THIS ORDER NOTWITHSTANDING, CONTRACTOR'S CUMULATIVE LIABILITY ARISING OUT OF OR IN ANY MANNER RELATED TO ITS PERFORMANCE SHALL NOT EXCEED, IN THE AGGREGATE, ONE HUNDRED PERCENT (100%) OF THE MONIES RECEIVED BY CONTRACTOR UNDER THIS ORDER. THE REMEDIES PROVIDED TO BUYER UNDER THIS ORDER ARE IN LIEU OF ALL OTHER REMEDIES WHICH MAY BE OR BECOME AVAILABLE TO BUYER AT LAW OR IN EQUITY. THE LIMITATIONS SET FORTH HEREIN APPLY WHETHER CLAIMS ARISE PURSUANT TO CONTRACT, TORT, INDEMNITY, STATUTE, EQUITY OR ANY OTHER THEORY OF LAW, INCLUDING, BUT NOT LIMITED TO, THE BREACH OF ANY LEGAL DUTY OR THE FAULT, NEGLIGENCE, PROFESSIONAL LIABILITY OR STRICT LIABILITY OF CONTRACTOR. THIS LIMITATION SHALL BE INCLUSIVE OF ALL INSURANCE, BOND, AND LETTER OF CREDIT PROCEEDS, WHICH MAY BE PAID TO THE BUYER BY THE INSURERS, SURETIES OR BANKS OF CONTRACTOR. SHOULD THESE REMEDIES BE FOUND INADEQUATE OR TO HAVE FAILED IN THEIR ESSENTIAL PURPOSE FOR ANY REASON WHATSOEVER, THEN THE BUYER AGREES THAT THE CONTRACTOR'S RETURN TO THE BUYER OF NO GREATER THAN ONE HUNDRED PERCENT (100%) OF THE MONIES RECEIVED BY CONTRACTOR UNDER THIS ORDER SHALL PREVENT THE REMEDIES FROM FAILING THEIR ESSENTIAL PURPOSE AND SHALL BE CONSIDERED BY BUYER AS A FAIR AND ADEQUATE REMEDY.

14. ENTIRE AGREEMENT: This Order contains the entire agreement of the parties and supersedes any and all prior course of dealing, agreements, understandings and communications between Buyer and Contractor related to the subject matter of this Order. No amendment or modification of this Order shall be binding unless it is in writing and is signed by an authorized representative of Buyer and Contractor.

CONFIDENTIAL & PROPRIETARY
© Copyright Zeeco, Inc. 2010 – All rights reserved.

Annual Turbine Emissions Test Report

On
Exhaust Emissions
From

One Natural Gas Fired Turbine

At the
South Carlsbad Compressor Station
Loving, NM

Prepared For
Enterprise Products Operating

May 2010

Relient Emissions Testing, Inc
Project Number: 0023

Relient Emissions Testing Inc.
Air Emissions Testing for Industry

Ms. Jennifer Courser
Enterprise Products Operating
2162 Commerce Dr.
Midland, TX 79707
(432) 681-2600

05/15/2010

Re: Annual emissions testing at the South Carlsbad Compressor Station on Unit 1

Ms. Courser,

Exhaust emissions from one compressor turbine was tested at the South Carlsbad compressor station near Loving, New Mexico on. Testing was conducted to demonstrate compliance with emission limits set forth by NMED permit. The engine is identified as follows:

Engine Information	
Unit Number:	Unit 1
Manufacturer:	Solar
Serial Number:	4920
Model:	CENTAUR 40
Mfr. Rated Hp:	4500hp
Mfr. Rated Speed:	15,000

This is a natural gas fired turbine used for compression of natural gas for transportation through the pipeline.

The test matrix consisted of three 20-minute test runs on the turbine in accordance with NMED requirements. For each test, the average emission concentrations of nitrogen oxides (NO_X), oxygen (O_2), and carbon monoxide (CO) were measured using analytical instrumentation. Operational data such as Gas Producer Speed, Turbine Speed, and suction and discharge pressures were recorded during each run from available operational data on the unit.

Results of the tests are presented in tabular format in this report. Included in this table are engine operational data, ambient conditions, emission concentrations, and mass emission rates.

Continuous emission monitors housed in an air-conditioned mobile laboratory were used to measure the exhaust concentrations of NO_X, CO and O_2. This testing utilized the following analytical methods:

EPA Reference Method 3a	O_2 concentration
EPA Reference Method 7e	NO_X concentration
EPA Reference Method 10	CO concentration
EPA Reference Method 19	Mass emission rates

A computerized data recorder was used to record output from the analyzers. The data logger record provides documentation of the emission measurements and the instrument calibrations. The data logger records are also useful for indicating trends in the data.

Mass emission rates were calculated using EPA Method 19 calculations (combustion stoichiometry). Emission rates in terms of lbs/hr and TPY were calculated using the pollutant concentration (ppmv), the oxygen F-factor (DSCFex/MMBtu) and the horsepower specific fuel consumption rate (Btu/Hp-hr). The O_2 F-Factor used in this test series was 8710 (DSCFex/MMBtu), the EPA default value for engines burning natural gas. The horsepower specific fuel rate used in the test was 9080 Btu/Hp-hr.

A summary of the quality assurance procedures associated with the EPA test methods is presented in tabular format in the appendix of this report. Examples of these procedures include daily multipoint calibrations, zero and span checks between each test run, NO_2 to NO converter efficiency check results, sample system bias check results, and analyzer interference test results.

The appendix of this report also includes supporting test documentation, example calculations, and data logger records.

If you have any questions, please feel free to contact me at (806) 773-8851.

Sincerely,



Ross Thompson
Principal Scientist
Relient Emissions Testing, Inc

Solar Turbines
A Caterpillar Company

Solar Turbines Incorporated

9330 Sky Park Court
San Diego, CA 92123
Tel: (858) 694-1616

Submitted Electronically

September 4, 2019

Attn: Jing Li
Enterprise Products

Subject: Centaur 40 Routine Maintenance Overhaul
South Carlsbad (NM)

The Centaur 40 turbine package (S/N 3020123) at the above facility recently underwent a routine maintenance overhaul utilizing Solar Turbine's engine exchange program.

The overhaul engine core that Solar Turbines provided to Enterprise was a like-for-like replacement with the same guarantees on performance and emissions as the core that was replaced.

Per 40 CFR 60, Subpart KKKK rule language, an overhaul does not trigger the definition of "modification" because it is a like-for-like exchange with the same performance and emissions specifications as the original equipment. In addition, an overhaul is not "reconstruction" as the cost of a routine overhaul is well less than 50% of the cost of a new comparable unit.

This turbine package "commenced construction" in 1973. Routine overhaul exchange of turbine components does not signify a new affected facility per the NSPS provisions in 40 CFR 60.

Because routine overhaul exchange of components on an existing facility does not trigger the definitions of "new", "modification" or "reconstruction" there are no federal NSPS ramifications. Solar recommends a review of the State-issued operating permit for any facility specific requirements associated with the overhaul which typically may include agency notification and/or emissions testing.

Please call me at 858.505.8554 if you have any questions.

Sincerely,

Anthony Pocengal
Solar Turbines Incorporated

cc: Joey Guillen, Solar Turbines

Solar Turbines
A Caterpillar Company

Solar Turbines Incorporated

9330 Sky Park Court
San Diego, CA 92123
Tel: (858) 694-1616

Submitted Electronically

October 3, 2019

Attn: Alena Miro
Enterprise Products

Subject: Centaur 40 – Routine Maintenance Overhaul
South Carlsbad Unit 2 (NM)

The Centaur 40 turbine (S/N CC79419) at the above facility underwent a routine maintenance overhaul utilizing Solar Turbine's engine exchange program in September 2018.

The overhauled turbine core (gas producer and power turbine) that Solar Turbines provided Enterprise is a like-kind replacement with the same guarantees on performance and emissions as the core that was replaced.

Per 40 CFR 60, Subparts GG and KKKK rule language, an overhaul does not trigger the definition of "modification" because it is a like-for-like exchange with the same performance and emissions specifications as the original equipment. In addition, the engine exchange is not "reconstruction" as the cost of a routine overhaul is well less than 50% of the cost of a new comparable unit.

The overhauled engine is not "new" as per the NSPS General Provisions in 40 CFR 60, Subpart A, this turbine "commenced construction" in 1979. Routine overhaul exchange of turbine components does not signify a new affected facility per either of the Subpart GG or KKKK definitions.

Because routine overhaul exchange of components on an existing facility does not trigger the definitions of "new", "modification" or "reconstruction", there are no NSPS ramifications due to this activity.

Please call me at 858.505.8554 if you have any questions.

Sincerely,

Anthony Pocengal
Solar Turbines Incorporated

cc: Joey Guillen, Solar Turbines Incorporated

Caterpillar: Confidential Green

New Mexico Environment Department
525 Camino de los Marquez, Suite 1
Santa Fe, NM 87505
Phone (505) 476-4300 Fax (505) 476-4375

Version 1/1/2010

NMED USE ONLY	
DTS	
TEMPO	

UNIVERSAL STACK TEST NOTIFICATION, PROTOCOL AND REPORT FORM

NMED USE ONLY	
Staff	
Admin	

Submit to: Stacktest.aqb@state.nm.us

I. DATABASE HEADER INFORMATION (drop down menus in bold)

a. AI#		
218	**Test Notification/Protocol**	**Initial Compliance Test**

d. Company Name:	e. Facility Name:
Enterprise Field Services LLC	**South Carlsbad Compressor Station**

f. Emission Unit Numbers:	g. Emission Unit Description (boiler, Waukesha 7042, etc)
5	**Centaur 40 Turbine**

h. Reports - Tracking Number from notification response:	i. Proposed Test Date:	j. Actual test date:
CMT	**Week of 6/7**	**06/09/2021**

k. Reason for test (name permit requirement, NSPS, MACT, consent decree, etc. Indicate here is this notification is a revised test date only)

NSR Permit requirement.

II. GENERAL COMPANY AND FACILITY INFORMATION

a.Company Address:			k.. Facility Address:		
PO Box 4324			**Sec12/T23S/R23E**		
b. City:	c. State:	d. Zip:	l. City:	m. State:	n. Zip:
Houston	**TX**	**7 7 2 1 0**	**Loving**	**NM**	**88256**
e. Environmental Contact:	f. Title:		o. Facility Contact:	p. Title:	
Robert Dunaway	**Senior Env Eng.**		**Roland Zamarripa**	**Area Mananger**	
g. Phone Number:	h. Cell Number:		q. Phone Number:	r. Cell Number:	
575-628-6802			**575-628-6869**		
i. Email Address:			s. Email Address:		
rhdunaway@eprod.com			**rzamarripa@eprod.com**		
j. Title V Permit Number:			t. NSR Permit Number:		
P130-R3M1			**0220-M10R1**		

u. Detailed driving directions from nearest New Mexico town:

From Loving, UN285 north to Roberson Road west, Roberson Road west to station. 65 Roberson Rd. Loving, NM 88526

III. TESTING FIRM

a. Company:	g. Contact:	
BAIR	**Randy Bartley**	
b. Address 1:	h. Title:	
1400 Civic Place	**Managing Partner and CEO**	
c. Address 2:	i. Office Phone:	j. Cell Phone:
Suite 221	**817-439-4767**	

d. City:	e. State:	f. Zip:	k. Email Address:
South Lake	TX	76092	rbartley@bairquality.com

IV. EMISSION UNIT

a. Emission Unit Number:	b. Make & Model Number
5	Centaur 40
c. Serial Number:	d. Permitted Capacity:
OHL20-C1803	4700

e Exceptions: Explain if test is late, rescheduled, related to an enforcement action:

g. Emission Unit Description and brief process name or description:

Natural gas-fired turbines for natural gas compression.

h. Installation Date:	i. Startup Date:	k. Date Reached Max. Capacity:
4/1/21	4/19/21	4/28/21

l. Control Equipment Description as listed in permit (model, ser. # etc. if applicable):

NA

STACK PARAMETERS

m. Velocity (ft/sec):	182
n. Temperature (°C):	472
o. Stack Diameter, D (in.):	39
p. Distance to Stack Bends or Obstructions:	
Upstream, Distance A (in.):	24
Downstream, Distance B (in.):	96

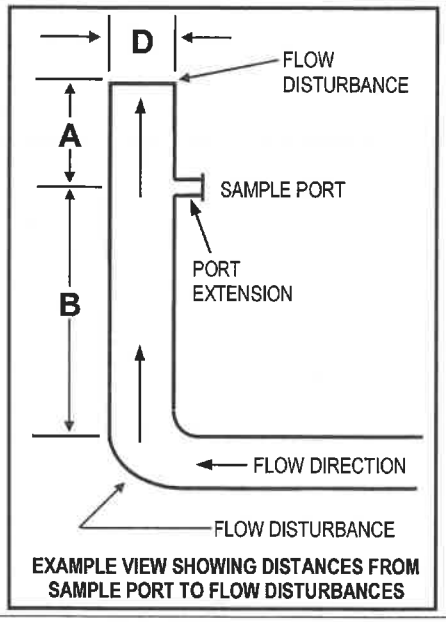

EXAMPLE VIEW SHOWING DISTANCES FROM SAMPLE PORT TO FLOW DISTURBANCES

Attach an explanation or drawing to explain any difficult or unusual stack geometry or parameters.

V. POLLUTANTS AND PROPOSED TEST METHODS

Pollutant or Parameter:		Proposed Test Methods (Deviations from approved methods require supporting documentation and prior authorization)	Deviation to Test Method Requested
☐	Portable Analyzer Methods for NOx, CO, SO_2		☐
☒	NOx	EPA Method 7E	☐
☒	CO	EPA Method 10	☐
☐	SO2	EPA Method 6	☐
☐	VOCs	(Specify)	☐
☐	HAPs	(Specify)	☐
☐	PM (TSP)	EPA Method 5	☐
☐	PM10	EPA Method 201	☐
☐	PM2.5	(Specify)	☐
☐	Opacity	EPA Method 9	☐
☐	Visual E.	EPA Method 22	☐
☒	Stack Flow	EPA Methods 1 - 3	☐
☐	Moisture	EPA Method 4	☐
☒	Other	(Specify) Moisture via ASTM 6348	☐

☐	Other	(Specify)	☐
List Specific VOC's and HAP's:			

VI. PROPOSED TEST RUN AND TEST LOAD INFORMATION

a. Number of Test Runs:	b. Run Duration	c. Required by (regulation or permit number):	d. Specific Condition or Section:
3	60	0220-M10R1	B111.A(2)

PLEASE NOTE – Default run duration is 60 minutes, unless otherwise specified by an applicable regulation.

e. Expected Load:	f. Percent of Permitted Capacity:	g. Is this an opacity test?	h. If yes, no. of observation pts.:
>90%	91.8	Yes ☐ No ☒	

i. If expected load during test is less than 90% of capacity, explain:

NOTE – Failure to test at 90-100% of permitted load will limit unit operation to 110% of tested load until a new initial compliance test is conducted.

PLANT OR UNIT OPERATING PARAMETERS TO BE MONITORED

j. List and explain the plant operating parameters that will be monitored and applicable permit conditions or regulatory standards.

Turbine operating parameters.

VII. ADDITIONAL DETAILS (where applicable)

RATA and INSTRUMENTAL ANALYZER CALIBRATION PROCEDURES

a. Do any of the methods you are proposing utilize instrumental analyzers (i.e.; EPA Methods 3A, 6C, 7E, 10, 18, 25/25A, 320 etc.)? If yes, briefly describe analyzer calibration procedures and/or calibration standard procedures. Enter the highest pollutant concentration expected and the proposed concentrations of calibration gases.	☒ Yes	☐ No

As described in the methods.

SAMPLING TRAIN LEAK CHECK PROCEDURES

b. Do any of the methods you are proposing utilize the EPA Method 5 sampling train (i.e.; EPA Methods 1-4, 5, 17, 26/26A, 29, etc.)? If yes, briefly describe sampling train and pitot tube leak check procedures:	☐ Yes	☒ No

EPA METHOD 19 IN LIEU OF EPA METHODS 1-4

c. Are you proposing to utilize EPA Method 19 in lieu of EPA Methods 1-4? If yes, explain why you believe this proposal is justified:	☐ Yes	☒ No

PLEASE NOTE – EPA Method 19 may be utilized in lieu of EPA Methods 1-4, subject to the approval of the Department. If you are proposing to utilize EPA Method 19 in lieu of EPA Methods 1-4, you MUST include a recent fuel gas heating value analysis as well as a recent fuel flow meter calibration certificate, preferably conducted on the day of the test, but no earlier than three months prior to the test date. If the analyses have been conducted prior to the test date, you MUST append the certificates to the protocol. If conducted on the day of the test, you MUST append the certificates to the final test report.

VIII. ATTACHMENTS (as needed to support proposed test; check all that apply)		
NOTIFICATION/PROTOCOL ATTACHMENTS		
☐	Road Map Indicating Directions from Nearest New Mexico Town to Facility	
☐	Schematic of process being tested showing emission points, sampling sites and stack cross-section	
☐	Copy of proposed test methods (except for those promulgated test methods found in 40 CFR 51, 60, 61 and 63)	
☐	Fuel Heating Value Analysis	
☐	Fuel Flow Meter Calibration Certificate	
☐	Other:	
☐	Other:	
TEST REPORT ATTACHMENTS		
☒	**Section 2. Tables of Results**	
☐	**Supporting Documents (Specify)**	
Retain Report Section 3 - Test Procedures, Data, Calculations, Appendices – 2 years NSR permits, 5 years TV		

IX. CERTIFICATION		
This document has been prepared under my supervision and is accurate and complete to the best of my knowledge. I understand that acceptance of this protocol does not waive the requirements of any permit or regulation. I understand that any procedural errors or omissions are the sole responsibility of the permit holder.		
Signature:	Print Name and Title: Jon Fields - Director, Field Environmental	Date: 7/6/2021
Responsible Official for Title V? ☐ Yes	☒ No (R.O signature not required for routine periodic testing)	

Mendez, Brenda

From: Mendez, Brenda
Sent: Thursday, July 8, 2021 9:07 AM
To: 'stacktest.aqb@state.nm.us'
Cc: Dunaway, Robert; Reinermann, Paul
Subject: South Carlsbad
Attachments: South Carlsbad Stack Test Report Unit 5 July 2021.pdf

Good Morning

Attached please find the stack test report for South Carlsbad Compressor Station for the following:

AI #	NOI/GCP/ NSR #	TV #	Owner/Operator	Facility Name	Unit #	Serial #	Test Requirement/Description (NSPS/MACT/Permit/Initial Compliance)
218	0220-M10R1	P130-R3M1	Enterprise Field Services LLC	South Carlsbad Compressor Station	5	OHL20-C1803	Initial NSPS GG Compliance Test

If you have questions or require additional information, please contact Rob Dunaway at (575) 628-6802.

Thank you

Brenda J. Mendez
Analyst, Planning and Reports
Enterprise Products Operating, LLC
New Phone Number: Tel (713) 381-6595 – Fax (281) 887-8086
bjmendez@eprod.com

Performance Test Report

Applicable Compliance Tests

Subpart GG

Source: Unit 5, Solar Centaur 40, Turbine, Serial No.: OHL20-C1803

Location: South Carlsbad Compressor Station

Prepared For:
Enterprise Field Services LLC
PO Box 4324, Houston, TX, 77210-4324
AI 218

Test Date:
June 9, 2021

AI #30793
1400 Civic Pl, Suite 221
Southlake, TX 76092
817-439-4767-Phone
817-439-4149-Fax

Certification and Attendees

Applicable Compliance Tests

Subpart GG

Enterprise Field Services LLC

Location: South Carlsbad Compressor Station

Eddy County, NM

Permit Number: 220-M11

Test Date:

June 9, 2021

Attendees:

Name	Title	Company	Phone Number
Kyle Pier	Emissions Analyst	BAIR	(817) 439-4767

I certify that I have personally examined and am familiar with the information submitted herein, and based on my inquiry of those individuals immediately responsible for obtaining the information; I believe the submitted information is true, accurate, and complete.

Test Analyst

Quality Assurance Officer

Table of Contents

1. Introduction

1.1 Test Purpose and Objectives

1.2 Stack Schematic (Figure 1)

1.3 Process Description

1.4 Physical Location

2. Summary

2.1 Test Results and Emission Calculations

3. Description of Test Procedure

3.1 Methods of Sampling

3.2 Description of Test

3.3 Sampling Schematic (Figure 2)

4 Site and Operational Data

4.1 Site Data

4.2 Operational Data

4.3 EPA Method 7E 8.1.2 - Determination of Stratification

4.4 EPA Method Method 1 and 2 Velocity Traverses and Pressure Measurement

5 QA/QC Program

5.1 Review of Reports, Field Analysis, and Lab Analysis

5.2 Chain of Custody

5.3 Calibration and Maintenance of Equipment

5.4 Training and Knowledge of Methods

6 Appendices

6.1 Laboratory Equipment Inventory

6.2 Calibration Worksheets for Sampling and Measurement Equipment

6.2.a Linearity Chart

6.2.b Interference Check

6.2.c Calibration Gas Certificates

6.3 Equations with Example Calculations from Test Data

6.4 Nomenclature

6.5 Engine Data - Manufacturer's Ratings and Specifications

6.6 Site Specific Photographs

6.7 Résumés

6.8 FTIR Data QA/QC Report

6.9 Analyzer Raw Data Logs

1. Introduction

1.1 Test Purpose and Objectives

The purpose of the emissions test is to document levels of selected pollutants at a maximum level of source operation. The information is used to confirm compliance with the state air quality requirements and/or federal requirements. Testing confirms that emissions are less than all applicable emissions limitations.

Owner/Operator:	
Company:	Enterprise Field Services LLC
Location Name:	South Carlsbad Compressor Station
Source #:	Unit 5
Model #:	Solar Centaur 40
Source Type:	Turbine
BHP:	4700
Serial #:	OHL20-C1803
Date Mfg:	12/18/2000
Date Rebuilt:	NA
County/Parish:	Eddy
State:	NM
Date of Test:	6/9/2021

Testing Organization:
BAIR
1400 Civic Pl, Suite 221
Southlake, TX 76092

Attendees:
Kyle Pier

Included in this emissions survey report are details outlining the process description of the source stack that was tested, results of the test, methodologies of sampling and analysis, and any other background information pertaining to the test.

1.2 Stack Schematic

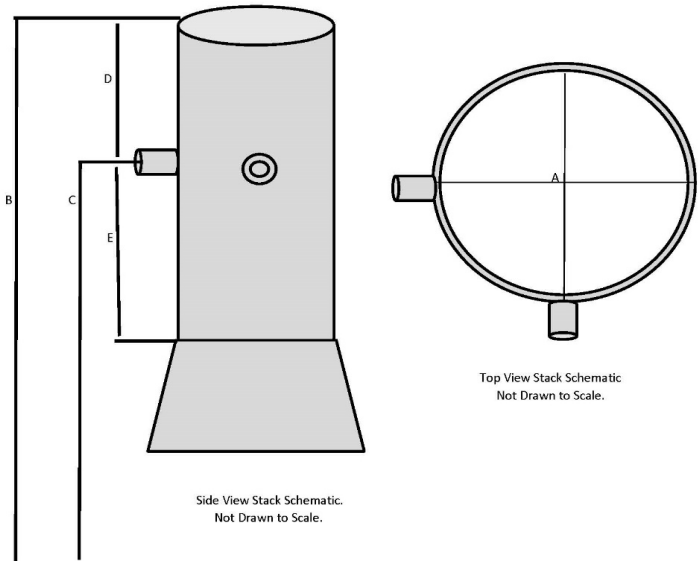

(Figure 1)

Stack Information		
Inside Stack Diameter (A):	39	inches
Stack Height (B):	60	feet
Sampling Port Height (C):	58	feet
Distance from port to downstream disturbance (D):	24	inches
Distance from port to upstream disturbance (E):	96	inches
Distance "D" must be ≥ 1/2 x Stack ID (Criteria Met):	Yes	
Distance "E" must be ≥ 2 x Stack ID (Criteria Met):	Yes	
Single or Dual Exhaust:	Single	

1.3 Process Description

The function of the facility is to process natural gas for the removal of water, crude oil condensates, and carbon dioxide, and throughfractionation extracts natural gas liquids (NGL) using cryogenic distillation. A parallel mechanical refrigeration process removes additional hydrocarbon liquids.

1.4 Physical Location

Coordinates: 32.318285 (Latitude) , -104.135019 (Longitude)

2. Summary

2.1 Test Results and Emission Calculations

Run 1

Results/Limits	CO	NOx	Oxygen (%)
Raw Result (PPM dry):	1.99	10.12	16.46
Bias Adjusted Result (PPM dry)	1.63	9.69	16.92
Test Result Correct to 15% O_2 (PPM dry):	2.42	14.36	15.00
Exhaust Flow (scfh):	1825733	1825733	NA
Molecular Weight (lb/lb-mole):	28.00	46.01	NA
Ideal Gas Conversion Factor (SCF/lb-mole)	385.23	385.23	NA
Mass Rate, lb/hr, at Rated HP-hr:	0.216	2.112	NA

Run 2

Results/Limits	CO	NOx	Oxygen (%)
Raw Result (PPM dry):	2.24	10.27	16.47
Bias Adjusted Result (PPM dry)	1.88	9.85	16.93
Test Result Correct to 15% O_2 (PPM dry):	2.79	14.62	15.00
Exhaust Flow (scfh):	1819356	1819356	NA
Molecular Weight (lb/lb-mole):	28.00	46.01	NA
Ideal Gas Conversion Factor (SCF/lb-mole)	385.23	385.23	NA
Mass Rate, lb/hr, at Rated HP-hr:	0.248	2.139	NA

Run 3

Results/Limits	CO	NOx	Oxygen (%)
Raw Result (PPM dry):	2.29	10.24	16.47
Bias Adjusted Result (PPM dry)	1.93	9.81	16.93
Test Result Correct to 15% O_2 (PPM dry):	2.87	14.59	15.00
Exhaust Flow (scfh):	1830894	1830894	NA
Molecular Weight (lb/lb-mole):	28.00	46.01	NA
Ideal Gas Conversion Factor (SCF/lb-mole)	385.23	385.23	NA
Mass Rate, lb/hr, at Rated HP-hr:	0.257	2.146	NA

Average

Results/Limits	CO	NOx	Oxygen (%)
Raw Result (PPM dry):	2.18	10.21	16.47
Bias Adjusted Result (PPM dry)	1.81	9.78	16.93
Test Result Correct to 15% O_2 (PPM dry):	2.69	14.52	15.00
Regulatory Limit (PPM dry):	50.00	165.00	15.00
Rated HP-hr:	4315	4315	NA
Mass Rate, lb/hr, at Rated HP-hr:	0.24	2.13	NA
Estimated TPY:	1.05	9.34	NA

3. Description of Test Procedure

3.1 Methods of Sampling

Pollutants were measured according to EPA Reference Methods (RM's) described in the Code of Federal Regulations (CFR), Title 40, Part 60, Appendix A. The following methods were used:

Pollutant or Parameter	Sampling Method	Analysis Method
Sample Point Location	EPA Method 7E 8.1.2	Single Point (Strat Tested)
Sample/Velocity Traverses	EPA Method 1/1A	Equal Area
Oxygen	EPA Method 3A	Paramagnetic Sensor
Gas Dilution	EPA Method 205	Gas Dilution System
Nitrogen Oxides	EPA Method 7E	FTIR
Carbon Monoxide	EPA Method 10	FTIR
Moisture Calculations	ASTM 6348	FTIR

3.2 Description of Test

BAIR Emissions Analyst arrived to the location and a brief review of the test plan took place. All sampling equipment was positioned accordingly for sampling. The analyzers were calibrated per specifications in the applicable RM/ASTM procedures. All quality assurance procedures were performed, and no leaks were found in the system. The sample probe was positioned within the stack of the source. The analyzers achieved stability beyond two times the response time before recording of the analytical data took place.

Flue gas was sampled from the single point that most closely matches the mean as identified in the stratification test and was positioned at least one half stack diameter from a downstream disturbance and at least 2 stack diameters from any upstream disturbances. Sample gas was pulled at a continuous rate from the stack, through the probe and transported by means of a heated Teflon or heated stainless steel line, to a condenser to dry the sample (O2 only), and to a heated filter. From the condenser and heated filter, the sample is transported through Teflon or stainless steel tubing to the analyzers for measurements. After the final run of the day post test calibrations were completed, the sampling train was disassembled and loaded for departure.

3.3 Sampling Schematic

See Figure 2 - Sampling Schematic for a diagram of FTIR sampling system

3.3 Sampling Schematic

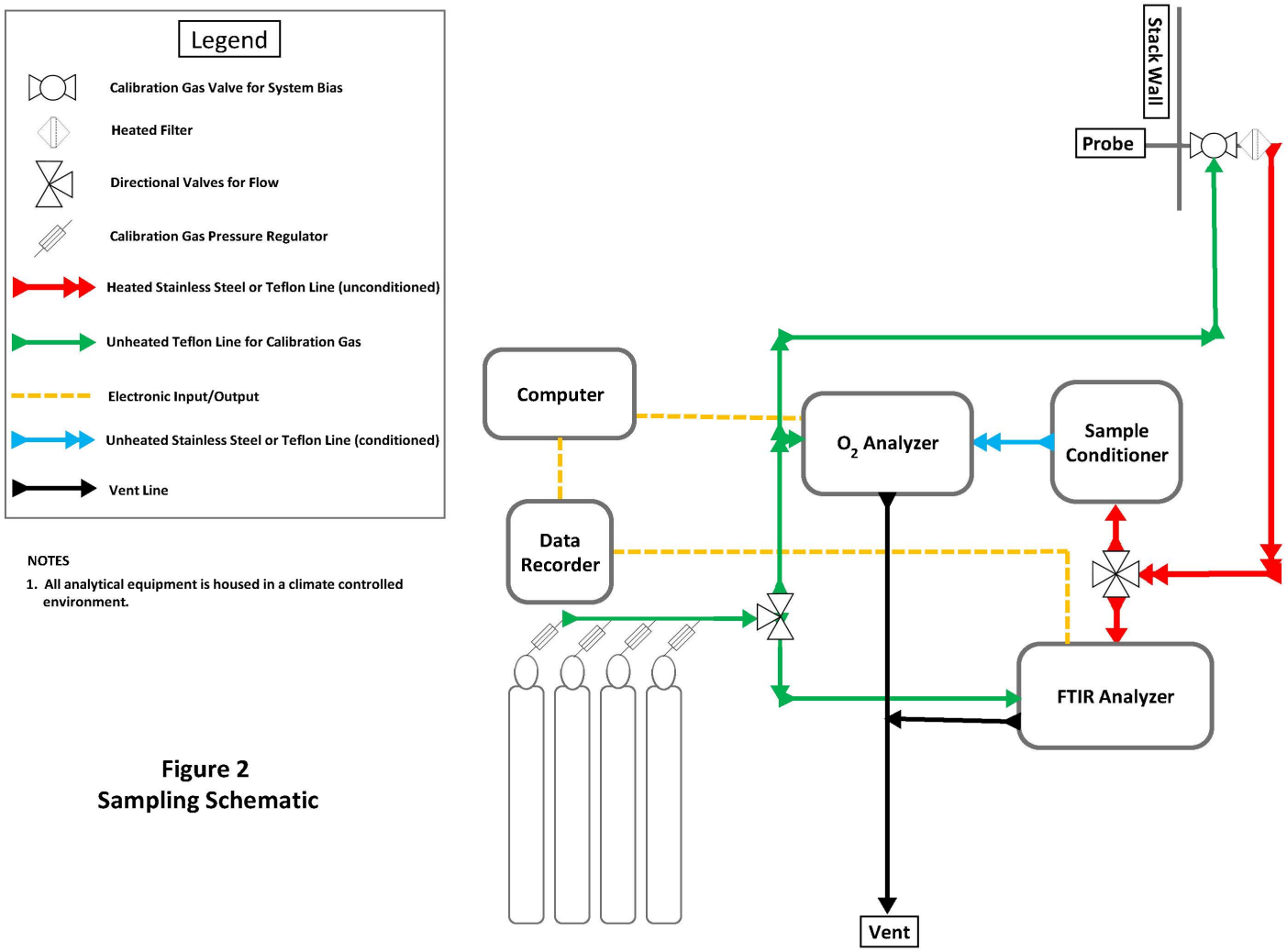

Figure 2
Sampling Schematic

4. Site and Operational Data

4.1 Site Data

Location: South Carlsbad Compressor Station
Source: Unit 5
Date: 6/9/2021
Technician: Kyle Pier

Site Specific Conditions	
Weather Station (name)	Cavern City Airport TRML Station
Weather Station Elevation WSE (ft)	3295
Site Elevation (ft)	3051
Coordinates (Latitude, Longitude)	32.318285, -104.135019

Run #1			
Time of Recording	**Ambient Temp. (deg. F)**	**Barometric Pressure (in Hg)**	**Altitude Corrected Barometric Pressure (in Hg)**
15:02	103	26.52	26.76
15:17	103	26.52	26.76
15:34	103	26.52	26.76
15:49	104	26.52	26.76
16:04	104	26.52	26.76
Average	**103.4**	**26.52**	**26.76**

Run #2			
Time of Recording	**Ambient Temp. (deg. F)**	**Barometric Pressure (in Hg)**	**Altitude Corrected Barometric Pressure (in Hg)**
16:13	104	26.52	26.76
16:28	105	26.52	26.76
16:43	105	26.52	26.76
16:59	105	26.52	26.76
17:14	105	26.52	26.76
Average	**104.8**	**26.52**	**26.76**

Run #3			
Time of Recording	**Ambient Temp. (deg. F)**	**Barometric Pressure (in Hg)**	**Altitude Corrected Barometric Pressure (in Hg)**
17:21	104	26.51	26.75
17:36	104	26.51	26.75
17:51	103	26.50	26.74
18:06	103	26.50	26.74
18:21	103	26.50	26.74
Average	**103.4**	**26.50**	**26.75**

4.2 Operational Data

Location: South Carlsbad Compressor Station
Source: Unit 5
Date: 6/9/2021
Technician: Kyle Pier

Engine Data	
Serial No.:	OHL20-C1803
Mfg/Model:	Solar Centaur 40
Engine Type:	Turbine
Date Mfg:	12/18/2000
Date Rebuilt:	NA
BHP:	4700
Type of Fuel:	Natural Gas
Date O2 Sensor Replaced:	NA
Total Operating Hours:	1191
Catalyst Differential Pressure:	NA

Previous Test Information	
Previous Test Date:	NA
Previous Total Operating Hours:	NA

Horsepower	
Horsepower Estimate Determined by:	Load % from Display Panel

Stack Exhaust Flow	
Stack Exhaust Determined by:	Measured

Heated Sample line Information	
Average Heated Sample Line Temperature (deg. F):	375.00

Run #1

Time of Recording	Catalyst Temp. (deg. F)	Intake Manifold Temp. (deg. F)	Load (%)	Effective Horsepower
15:02	1189	105	91.8%	4315
15:17	1189	105	91.8%	4315
15:34	1189	105	91.8%	4315
15:49	1189	105	91.8%	4315
16:04	1189	105	91.8%	4315
Average	**1189.0**	**105.0**	**91.8%**	**4315**

Run #2

Time of Recording	Catalyst Temp. (deg. F)	Intake Manifold Temp. (deg. F)	Load (%)	Effective Horsepower
16:13	1189	105	91.8%	4315
16:28	1189	105	91.8%	4315
16:43	1189	105	91.8%	4315
16:59	1189	105	91.8%	4315
17:14	1189	105	91.8%	4315
Average	**1189.0**	**105.0**	**91.8%**	**4315**

Run #3

Time of Recording	Catalyst Temp. (deg. F)	Intake Manifold Temp. (deg. F)	Load (%)	Effective Horsepower
17:21	1189	105	91.8%	4315
17:36	1189	105	91.8%	4315
17:51	1189	105	91.8%	4315
18:06	1189	105	91.8%	4315
18:21	1189	105	91.8%	4315
Average	**1189.0**	**105.0**	**91.8%**	**4315**

4.3 EPA Method 7E 8.1.2 - Determination of Stratification

Location: South Carlsbad Compressor Station
Source: Unit 5
Source Description: Turbine
Date: 6/9/2021
Technician: Kyle Pier

Site Specific Conditions	
Weather Station Elevation WSE (ft)	3295
Site Elevation (ft)	3051
Site Barometric Pressure P_{bar} (in. Hg)	26.51
P_{bar} WSE Corrected to Site Elevation	26.76

Diagram 1

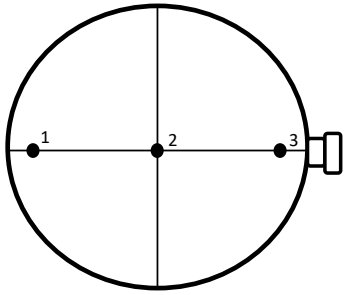

Stack ID (Inches)
39.00

Sampling Points	
% From far Wall	Inches
16.7%	6.51
50.0%	19.50
83.3%	32.49

Total Mean Concentration	
NOx Concentration (PPM)	5% of NOx Mean Concentration
10.25	0.513

Point/Mean Concentration Difference		
Sample Point	NOx (PPM)	%
1 - 16.7%	0.066	0.64%
2 - 50.0%	-0.035	-0.34%
3 - 83.3%	-0.031	-0.30%

Sampling Point 1 - 16.7%	
Sample Time:	NOx
2:53:38 PM	9.70
2:53:46 PM	10.01
2:53:53 PM	9.69
2:54:00 PM	10.18
2:54:08 PM	10.31
2:54:15 PM	10.57
2:54:23 PM	10.37
2:54:30 PM	10.05
2:54:38 PM	10.68
2:54:45 PM	9.86
2:54:53 PM	10.69
2:55:01 PM	10.43
2:55:08 PM	10.15
2:55:15 PM	10.07
2:55:23 PM	10.25
2:55:30 PM	9.95
Mean	10.19

Sampling Point 2 - 50.0%	
Sample Time:	NOx
2:55:38 PM	10.25
2:55:46 PM	9.59
2:55:53 PM	10.32
2:56:01 PM	10.74
2:56:08 PM	10.55
2:56:16 PM	10.16
2:56:23 PM	9.86
2:56:31 PM	9.76
2:56:38 PM	10.75
2:56:46 PM	9.85
2:56:53 PM	10.83
2:57:01 PM	10.79
2:57:08 PM	10.59
2:57:16 PM	10.30
2:57:23 PM	10.13
2:57:31 PM	10.10
Mean	10.29

Sampling Point 3 - 83.3%	
Sample Time:	NOx
2:57:38 PM	10.59
2:57:46 PM	10.46
2:57:53 PM	10.40
2:58:01 PM	10.20
2:58:08 PM	10.26
2:58:16 PM	10.01
2:58:24 PM	10.13
2:58:31 PM	10.67
2:58:39 PM	9.99
2:58:46 PM	10.78
2:58:54 PM	10.87
2:59:01 PM	9.73
2:59:08 PM	10.79
2:59:16 PM	9.56
2:59:24 PM	10.10
2:59:31 PM	9.96
Mean	10.28

A stratification test was performed pursuant to RM 7E 8.1.2. The gas stream was determined to be unstratified. This allows this source to be sampled at the single point that most closely matches the mean concentration.

4.4 EPA Method Method 1 and 2 Velocity Traverses and Pressure Measurement

Location: South Carlsbad Compressor Station
Source: Unit 5
Source Description: Turbine
Date: 6/9/2021
Technician: Kyle Pier

STACK DIMENSIONS		
Inside Stack Diameter:	39	inches
Stack Height:	60	feet
Sampling Port Height:	58	feet
Distance from port to downstream disturbance:	24	inches
Distance from port to upstream disturbance:	96	inches

Stack from Top View

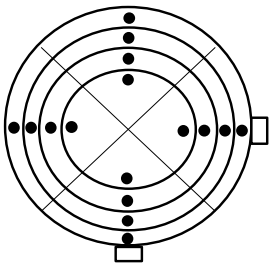

Stack from Side View

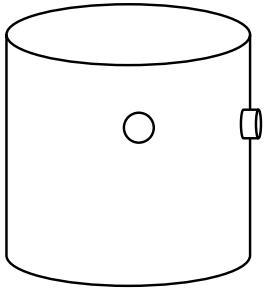

Stack Drawings are not representative of actual stacks tested.

Pitot Leak Check		
Pitot Type	Standard Pitot Tube	
Pitot Probe ID#	L6S	
Baseline C_p	0.99	
Pretest Leak-Check, Impact Opening		
3.0 in. H2O held stable for 15 seconds		Pass
Pretest Leak-Check, Static Opening		
3.0 in. H2O held stable for 15 seconds		Pass
Post-test Leak-Check, Impact Opening		
3.0 in. H2O held stable for 15 seconds		Pass
Post-test Leak-Check, Static Opening		
3.0 in. H2O held stable for 15 seconds		Pass

Back-Purge Check For Standard Pitot				
Post - Traverse 1 Back-Purge Check				
Point 2.8	6.3 mbar	ΔP After Back Purge	6.3 mbar	Pass
Post - Traverse 2 Back-Purge Check				
Point 2.8	6.3 mbar	ΔP After Back Purge	6.3 mbar	Pass
Post - Traverse 3 Back-Purge Check				
Point 2.8	6.3 mbar	ΔP After Back Purge	6.3 mbar	Pass

EPA RM1 and EPA RM2 (Traverse Points and Pitot Measurements)								
Traverse Point	% Stk Dia.	Inches on Diameter	Run 1		Run 2		Run 3	
			Temp (deg. C)	Pressure (mbar)	Temp (deg. C)	Pressure (mbar)	Temp (deg. C)	Pressure (mbar)
1.1	3.2%	1.25	471	6.4	476	6.4	461	6.4
1.2	10.5%	4.10	471	6.4	476	6.4	461	6.4
1.3	19.4%	7.57	471	6.5	476	6.5	461	6.5
1.4	32.3%	12.60	471	6.5	476	6.5	461	6.6
1.5	67.7%	26.40	471	7.3	476	7.3	461	7.3
1.6	80.6%	31.43	471	7.3	476	7.3	461	7.3
1.7	89.5%	34.91	471	7.1	476	7.1	461	7.1
1.8	96.8%	37.75	471	7.2	476	7.2	461	6.9
2.1	3.2%	1.25	471	7.5	476	7.5	461	7.5
2.2	10.5%	4.10	471	7.6	476	7.8	461	7.6
2.3	19.4%	7.57	472	8.4	476	8.1	461	7.7
2.4	32.3%	12.60	472	6.9	476	6.9	461	6.9
2.5	67.7%	26.40	472	6.7	476	6.7	461	6.7
2.6	80.6%	31.43	472	6.4	476	6.5	461	6.4
2.7	89.5%	34.91	472	6.5	476	6.3	461	6.5
2.8	96.8%	37.75	472	6.3	476	6.3	461	6.3
Stack Exhaust Flow (DSCFH)			1825733		1819356		1830894	

The presence or absence of cyclonic flow at the sampling location must be determined if the following conditions are present. (1) cyclones and interial demisters following venturi scrubbers or, (2) in stacks

Check of the following conditions that could potentially induce cylonic flow at sampling location:	
Cyclones:	No
Intertial Demisters/Venturi Scrubers:	No
Tangential Inlets:	No

Reference Method 2: Velocity and Volumetric Flow Rate Equations:

Average Stack Gas Velocity. RM 2 eq. 2 - 7. Calculate the average stack gas Velocity as follows.

$$V_s = K_p C_p * \frac{\left[\sum_{i=1}^{n} \sqrt{P_i}\right]}{n} \times \left[\sqrt{\frac{T_{s(abavg)}}{P_s M_s}}\right]$$

Average Stack Gas Dry Volumetric Flow Rate. RM 2 eq. 2 - 8. Calculate the average stack gas dry volumetric flow rate as follows.

$$Q_{sd} = 3600(1 - B_{ws})V_s A[(T_{std}P_s)/(T_{s(abavg)}P_{std})]$$

Reference Method 2/2C Variables and Constants (Run 1 Traverses)		
K_p	85.49	Velocity Equation Constant
C_p	0.99	Pitot tube coefficient, dimensionless.
$\sqrt{\Delta P_i}$	26.693742	Sum of the square root of all points in. H2O
n	16	Total number of traverse points.
$T_{s(Abavg)}$	1340.375	Average absolute stack temperature (°R). = 460 + Stack Temp for English units.
P_S	26.766953	Absolute stack pressure (Barometric Pressure + Stack Static Pressure). (in. Hg)
M_S	30	Molecular weight of stack gas (lb/lb-mole).
V_S	182.42865	Average stack gas velocity (ft/sec).
B_{ws}	0.0490885	Water vapor in the gas stream proportion by volume.
A	8.2957681	Cross-sectional area of stack (ft2).
T_{std}	528	Standard absolute temperature (528 °R).
P_{std}	29.92	Standard absolute pressure (29.92 in. Hg).

Sample Probe Calibration

Probe Type: Standard Pitot **I.D. Number:** L6S

Project Number: 8-1-18-1

Geometric Pitot Calibration

Is pitot assembly in good repair? (●) Yes ( ) No If no, explain: *NA*

Standard Pitot

	Measurement	Specification	Calculation	Within Spec?
Tube O.D.	0.322 inches	None		N/A
Static Hole I.D.	0.031 inches	within 10% of (0.1*O.D.)	0.032 inches	YES
Tip to Static	2.66 inches	>=6*O.D.	1.93 inches	YES
Static to Bend	4.16 inches	>=8*O.D.	2.57 inches	YES

Pitot Cp= 0.99 according to 40 CFR 60 section 6.7

5. QA/QC Program

5.1 Review of Reports, Field Analysis, and Lab Analysis

BAIR's procedure for quality assurance includes reviewing each source test report, field work, and lab work. This process begins with the assessment of the source being tested, the appropriate test methods to be followed for test completion, and the ability to follow the test methods' performance specifications based on the configuration of the source. Any deviations or alternate procedures used will be identified in the test report.

5.2 Chain of Custody

BAIR documents all persons involved in the completion of the sampling survey. All unaltered field data, including operational data and analytical data, are sent electronically to BAIR corporate office for the generation of the final report. This report is reviewed by a QA team member before it is sent to the source owner or operator. Both hard copies and electronic copies can be generated.

5.3 Calibration and Maintenance of Equipment

All equipment used to conduct and complete the emissions test is maintained according to manufacturer's specifications, calibrated according to appropriate test method performance specifications, and quality control checked in the field for highest assurance in accuracy of data collected.

5.4 Training and Knowledge of Methods

BAIR trains all personnel involved in the chain of custody to ensure quality testing. Personnel receive formal training upon employment and continue training throughout employment via the following:

1. Attendance at EPA and state sponsored training courses and information seminars.
2. In-house meetings with discussions and training emphasizing quality assurance and quality control.
3. Requirements to demonstrate a full understanding of BAIR's standard operating procedures for conducting an emissions test through performance and on-the-job training.

As updates are made to standard test methods, BAIR management ensures that all testers are made aware of and trained, so that the integrity of its testing program reflects the latest performance specifications. In addition to regular attendance at conferences and seminars, BAIR, with the aid of subscription services, routinely identifies emerging developments in testing methodolgies, and implements the latest EPA and state regulations, practices, and guidance. Please see personnel résumés in Section 7 for any individual qualifications beyond BAIR's standard requirements for testing.

6.

Appendices

6.1 Laboratory Equipment Inventory

Analytical Equipment				
Equipment Type	Make	Model	Serial No.	Lab ID No.
FTIR Analyzer	MKS	Multi Gas 2030	16883779	Lab10-001
Oxygen Analyzer	CAI	600P	D10018	Lab10-002
MG Analog OG Module	BAIR	2030DBG2EKVS13T	016883779	Lab10-003
Sampling Equipment				
Calibration Manifold	CleanAir	NA	NA	Lab10-004
Heated Sample Line	Clayborn Labs	NA	12251	Lab10-005
Heated Pump	Air Dimensions	5KH35JNC397AT	K16J100224	Lab10-006
Method 2 Line	BAIR	NA	NA	Lab10-007
Sample Manifold	BAIR	NA	NA	Lab10-008
Temperature Controller Heated Filter	ATMO SEAL	DHS-G51	NA	Lab10-009
Diluter	NA	NA	NA	Lab10-010
Temperature Controller Heated Sample Line	UHP	ICH-901	23314	Lab10-011
Blanket	UHP	NA	NA	Lab10-012
Heated Manifold Blanket	UHP	NA	NA	Lab10-013
Electronic Signal Conditioner	Minute-Man	ED1500RM2U	NA	Lab10-014
Chiller / Pump Panel for Oxygen Analyzer	Clayborn Labs	NA	11012532601	Lab10-015
Digital Thermometer for Heated Probe	NA	NA	NA	Lab10-016
Generator	Onan	NA	NA	Lab10-017
Fuel Flow Equipment (RM19)				
Fuel Meter	Sage Prism	NA	NA	Lab10-018
Exhaust Flow Equipment (RM1/1a and RM2/2C)				
Single Point Probe	BAIR	NA	NA	Lab10-019
39" Rake Type Probe	NA	NA	NA	Lab10-020
Velocity Kit/Monometer	Dwyer	400-10-Kit	NA	Lab10-021
Standard Pitot Tube	Dwyer	400-10-Kit	L6S	Lab10-022
2' Probe (Unheated)	CleanAir	NA	10-10-13-3	Lab10-023
4' Probe (Heated)	CleanAir	NA	9-5-14-2	Lab10-024

6.2 Calibration Worksheets for Sampling Equipment

Location: South Carlsbad Compressor Station
Source: Unit 5
Date: 6/9/2021
Technician: Kyle Pier

	O2		CO		NO		NO2	
	Cylinder Value	Cylinder Number	Cylinder Value	Cylinder Number	Cylinder Value	Cylinder Number	Cylinder Value	Cylinder Number
High:	20.00	CC719176	211.22	CC102795	200.00	CC102795	100.00	CC719176
Mid:	9.00	CC719176	105.61	CC102795	100.00	CC102795	50.00	CC719176
Low:	0.00	X-060470	0.00	X-060470	0.00	X-060470	0.00	X-060470

		O2		CO		NO		NO2	
3-Point System Calibration Error		Response	ACE %	Response	ACE %	Response	ACE %	Response	ACE %
	High	19.87	-0.66	212.64	0.67	197.31	-1.34	101.17	1.17
	Mid	8.86	-0.70	106.15	0.26	97.92	-1.04	49.45	-0.55
	Low	0.00	-0.01	-0.12	-0.06	0.13	0.07	0.03	0.03
		Response	SB %	Response	SB %	Response	SB %	Response	SB %
2-Point System Calibration Error	Upscale	8.73	-0.65	105.86	-0.14	96.53	-0.69	45.87	-3.57
	Response Time	:30	NA	:30	NA	:30	NA	:56	NA
	Lowscale	-0.06	-0.30	0.59	0.34	1.13	0.50	0.06	0.03
	Response Time	:30	NA	:30	NA	:30	NA	:30	NA
Post Run System Calibration		Response	SB %	Response	SB %	Response	SB %	Response	SB %
	Upscale	8.72	-0.70	106.56	0.19	95.63	-1.14	48.76	-0.68
	Lowscale	-0.07	-0.33	0.13	0.12	0.55	0.21	0.08	0.06
Post Run Drift		Response		Response		Response		Response	
		Diff.	Drift %	Diff.	Drift %	Diff.	Drift %	Diff.	Drift %
	Upscale	-0.01	-0.05	0.699	0.33	-0.896	-0.45	2.8884	2.89
	Lowscale	-0.00593	-0.03	-0.45856	-0.22	-0.57223	-0.29	0.02665	0.03

Run 2		O2		CO		NO		NO2	
Pre-Cal ACE		Response	ACE %	Response	ACE %	Response	ACE %	Response	ACE %
	High	19.87	-0.66	212.64	0.67	197.31	-1.34	101.17	1.17
	Mid	8.86	-0.70	106.15	0.26	97.92	-1.04	49.45	-0.55
	Low	0.00	-0.01	-0.12	-0.06	0.13	0.07	0.03	0.03
Pre-Cal System Bias		Response	SB %	Response	SB %	Response	SB %	Response	SB %
	Upscale	8.73	-0.65	105.86	-0.14	96.53	-0.69	45.87	-3.57
	Response Time	:30	NA	:30	NA	:30	NA	:56	NA
	Lowscale	-0.06	-0.30	0.59	0.34	1.13	0.50	0.06	0.03
	Response Time	:30	NA	:30	NA	:30	NA	:30	NA
Post Run System Calibration		Response	SB %	Response	SB %	Response	SB %	Response	SB %
	Upscale	8.70	-0.80	105.77	-0.18	96.96	-0.48	46.67	-2.77
	Lowscale	-0.05	-0.24	0.56	0.32	0.87	0.37	0.41	0.38
Post Run Drift		Response		Response		Response		Response	
		Diff.	Drift %	Diff.	Drift %	Diff.	Drift %	Diff.	Drift %
	Upscale	-0.03	-0.15	-0.091	-0.04	0.4356	0.22	0.7983	0.80
	Lowscale	0.01184	0.06	-0.02681	-0.01	-0.25274	-0.13	0.35015	0.35

Run 3		O2		CO		NO		NO2	
Pre-Cal ACE		Response	ACE %	Response	ACE %	Response	ACE %	Response	ACE %
	High	19.87	-0.66	212.64	0.67	197.31	-1.34	101.17	1.17
	Mid	8.86	-0.70	106.15	0.26	97.92	-1.04	49.45	-0.55
	Low	0.00	-0.01	-0.12	-0.06	0.13	0.07	0.03	0.03
Pre-Cal System Bias		Response	SB %	Response	SB %	Response	SB %	Response	SB %
	Upscale	8.73	-0.65	105.86	-0.14	96.53	-0.69	45.87	-3.57
	Response Time	:30	NA	:30	NA	:30	NA	:56	NA
	Lowscale	-0.06	-0.30	0.59	0.34	1.13	0.50	0.06	0.03
	Response Time	:30	NA	:30	NA	:30	NA	:30	NA
Post Run System Calibration		Response	SB %	Response	SB %	Response	SB %	Response	SB %
	Upscale	8.72	-0.70	105.48	-0.32	96.32	-0.80	47.51	-1.93
	Lowscale	0.01	0.06	-0.01	0.06	0.45	0.16	0.41	0.38
Post Run Drift		Response		Response		Response		Response	
		Diff.	Drift %	Diff.	Drift %	Diff.	Drift %	Diff.	Drift %
	Upscale	-0.01	-0.05	-0.376	-0.18	-0.213	-0.11	1.6394	1.64
	Lowscale	0.07157	0.36	-0.59358	-0.28	-0.67453	-0.34	0.34897	0.35

Diluter Validation

Diluter Serial #	3071

Date:	6/9/2021

Diluter Model:	T700

Diluent :	Nitrogen

Dilution 1				Cylinder
Cal Gas:	Oxygen	Concentration:	79.20%	CC719176
		Target Concentration:	20.00%	
		Analyzer Response	**Deviation**	
Injection 1		19.81%	0.95%	Pass
Injection 2		19.88%	0.60%	Pass
Injection 3		19.90%	0.50%	Pass
	Average:	19.86%	0.68%	Pass

Dilution 2				Cylinder
Cal Gas:	Oxygen	**Concentration:**	79.20%	CC719176
		Target Concentration:	9.00%	
		Analyzer Response	**Deviation**	
Injection 1		8.90%	1.11%	Pass
Injection 2		8.91%	1.00%	Pass
Injection 3		8.91%	1.00%	Pass
	Average:	8.91%	1.04%	Pass

Validation Gas				Cylinder
Cal Gas:	Oxygen	**Concentration:**	9.01%	EB0098251
		Analyzer Response	**Deviation**	
Injection 1		9.00%	0.13%	Pass
Injection 2		9.00%	0.13%	Pass
Injection 3		9.00%	0.13%	Pass
	Average:	9.00%	0.13%	Pass

6.2.a Linearity Chart

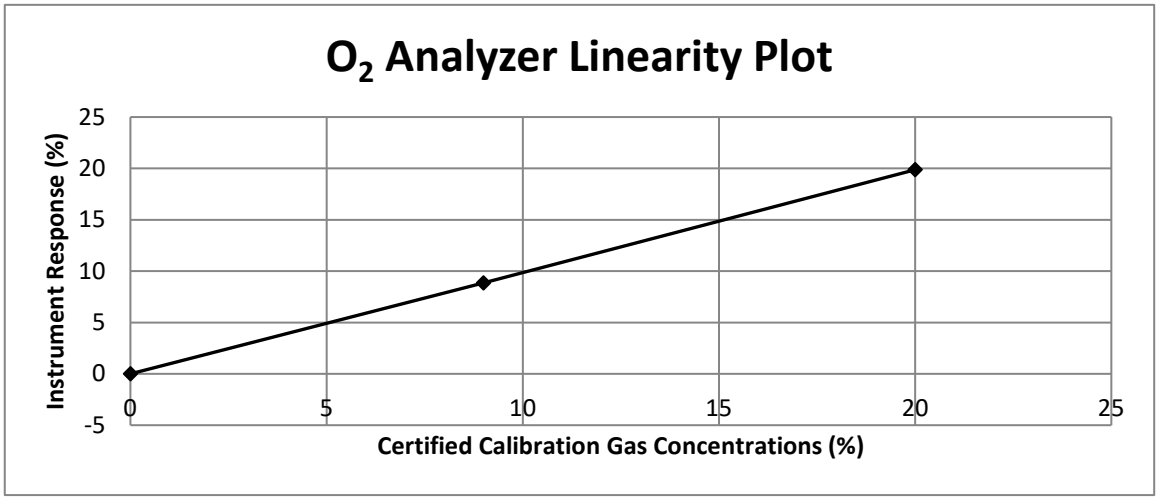

6.2.b Interference Check

Gas	Formula	+ 20°C	+ 50°C
Argon	Ar	- 0,23	- 0,25
Acetylene	C_2H_2	- 0,26	- 0,28
Acetone	C_3H_6O	- 0,63	- 0,69
Acetaldehyde	C_2H_4O	- 0,31	- 0,34
Ammonia	NH_3	- 0,17	- 0,19
Benzene	C_6H_6	- 1,24	- 1,34
Bromine	Br_2	- 1,78	- 1,97
Butadiene	C_4H_6	- 0,85	- 0,93
Methyl propene	C_4H_8	- 0,94	- 1,06
n-Butane	C_4H_{10}	- 1,10	- 1,22
Chlorine	Cl_2	- 0,83	- 0,91
Hydrogen chloride	HCL	- 0,31	- 0,34
Nitrous oxide	N_2O	- 0,20	- 0,22
Diacetylene	$(CHCl)_2$	- 1,09	- 1,20
Ethane	C_2H_4	- 0,43	- 0,47
Ethylen oxide	$C_2H_4O_2$	- 0,54	- 0,60
Ethylene	C_2H_4	- 0,20	- 0,22
Ethylene glycol	$(CH_2OH)_2$	- 0,78	- 0,88
Ethylbenzene	C_8H_{10}	- 1,89	- 2,08
Hydrogen fluoride	HF	+ 0,12	+ 0,14
Furan	C_4H_4O	- 0,90	- 0,99
Helium	He	+ 0,29	+ 0,32
n-Hexane	C_6H_{14}	- 1,78	- 1,97
Krypton	Kr	- 0,49	- 0,54
Carbon monoxide	CO	- 0,06	- 0,07
Carbon dioxide	CO_2	- 0,27	- 0,29
Methane	CH_4	- 0,16	- 0,17
Methylen chloride	CH_2Cl_2	- 1,00	- 1,10
Neon	Ne	+ 0,16	+ 0,17
n-Octane	C_8H_{18}	- 2,45	- 2,70
Phenol	C_6H_6O	- 1,40	- 1,54
Propane	C_3H_8	- 0,77	- 0,85
Propylene	C_3H_6	- 0,57	- 0,62
Propylene oxide	C_3H_6O	- 0,90	- 1,00
Propylene chloride	C_3H_7Cl	- 1,42	- 1,44
Monosilane	SiH_4	- 0,24	- 0,27
Styrene	C_8H_8	- 1,63	- 1,80
Nitrogen	N_2	0,00	0,00
Nitrogen oxide	NO	+ 42,70	+ 43,00
Nitrogen dioxide	NO_2	+ 5,00	+ 16,00
Oxygen	O_2	+100,00	+100,00
Sulphur dioxide	SO_2	- 0,18	- 0,20
Silphur fluoride	SF_6	- 0,98	- 1,05
Hydrogen sulphide	H_2S	- 0,41	- 0,43
Toluene	C_7H_8	- 1,57	- 1,73
Vinyl chloride	C_2H_3Cl	- 0,68	- 0,74
Vinyl fluoride	CH_3F	- 0,49	- 0,54
Water (steam)	H_2O	- 0,03	- 0,03
Hydrogen	H_2	+ 0,23	+ 0,26
Xenon	Xe	- 0,95	- 1,02

Fig. 10: Table of cross-sensitivities

Airgas
an Air Liquide company

Airgas Specialty Gases
Airgas USA, LLC
525 North Industrial Loop Road
Tooele, UT 84074
Airgas.com

CERTIFICATE OF ANALYSIS

Grade of Product: CEM-CAL ZERO

Part Number:	NI CZ200	Reference Number:	153-402023456-1
Cylinder Number:	X-060470	Cylinder Volume:	230.0 CF
Laboratory:	124 - Tooele (SAP) - UT	Cylinder Pressure:	2200 PSIG
Analysis Date:	Feb 01, 2021	Valve Outlet:	580
Lot Number:	153-402023456-1		

Expiration Date: Feb 01, 2029

ANALYTICAL RESULTS

Component	Requested Purity		Certified Concentration
NITROGEN	99.9995 %		99.9995 %
CARBON DIOXIDE	< 1.0 PPM	<LDL	0.03 PPM
NOx	< 0.1 PPM	<LDL	0.02 PPM
SO2	< 0.1 PPM	<LDL	0.1 PPM
THC	< 0.1 PPM	<LDL	0.04 PPM
CARBON MONOXIDE	< 0.5 PPM	<LDL	0.03 PPM

Permanent Notes: Airgas certifies that the contents of this cylinder meet the requirements of 40 CFR 72.2

Impurities verified against analytical standards traceable to NIST by weight and/or analysis.

Signature on file
Approved for Release

Page 1 of 153-402023456-1

Airgas Specialty Gases
Airgas USA, LLC
9810 BAY AREA BLVD
Pasadena, TX 77507
Airgas.com

CERTIFICATE OF ANALYSIS

Grade of Product: CERTIFIED STANDARD-SPEC

Customer:	BAIR		
Part Number:	X05NI99C15A51F2	Reference Number:	163-401540315-1
Cylinder Number:	CC102795	Cylinder Volume:	144.6 CF
Laboratory:	124 - Pasadena (SG06) - TX	Cylinder Pressure:	2015 PSIG
Analysis Date:	Jul 23, 2019	Valve Outlet:	660
Lot Number:	163-401540315-1		

Expiration Date: Jul 23, 2022

Product composition verified by direct comparison to calibration standards traceable to N.I.S.T. weights and/or N.I.S.T. Gas Mixture reference materials.

ANALYTICAL RESULTS

Component	Req Conc	Actual Concentration (Mole %)	Analytical Uncertainty
SULFUR HEXAFLUORIDE	5.000 PPM	4.990 PPM	+/- 5%
CARBON MONOXIDE	3000 PPM	3107 PPM	+/- 2%
NITRIC OXIDE	3000 PPM	2942 PPM	+/- 2%
PROPANE	3000 PPM	2954 PPM	+/- 2%
NITROGEN	Balance		
Total oxides of nitrogen		2948 PPM	For Reference Only

Signature on file
Approved for Release

Airgas
an Air Liquide company

Airgas Specialty Gases
Airgas USA, LLC
9810 BAY AREA BLVD
Pasadena, TX 77507
Airgas.com

CERTIFICATE OF ANALYSIS

Grade of Product: EPA Protocol

Part Number:	E02NI91E15A3101	Reference Number:	163-401858358-1
Cylinder Number:	EB0098251	Cylinder Volume:	145.1 CF
Laboratory:	124 - Pasadena (SG06) - TX	Cylinder Pressure:	2015 PSIG
PGVP Number:	A32020	Valve Outlet:	590
Gas Code:	O2,BALN	Certification Date:	Jul 21, 2020

Expiration Date: Jul 21, 2028

Certification performed in accordance with "EPA Traceability Protocol for Assay and Certification of Gaseous Calibration Standards (May 2012)" document EPA 600/R-12/531, using the assay procedures listed. Analytical Methodology does not require correction for analytical interference. This cylinder has a total analytical uncertainty as stated below with a confidence level of 95%. There are no significant impurities which affect the use of this calibration mixture. All concentrations are on a mole/mole basis unless otherwise noted.
Do Not Use This Cylinder below 100 psig, i.e. 0.7 megapascals.

ANALYTICAL RESULTS

Component	Requested Concentration	Actual Concentration	Protocol Method	Total Relative Uncertainty	Assay Dates
OXYGEN	9.000 %	9.012 %	G1	+/- 0.6% NIST Traceable	07/21/2020
NITROGEN	Balance				

CALIBRATION STANDARDS

Type	Lot ID	Cylinder No	Concentration	Uncertainty	Expiration Date
NTRM	110606	CC338287	14.93 % OXYGEN/NITROGEN	+/-0.20%	Dec 13, 2022

ANALYTICAL EQUIPMENT

Instrument/Make/Model	Analytical Principle	Last Multipoint Calibration
O2-SIEMENS OXYMAT 6 DD550510 X9A4UGL8	PARAMAGNETIC	Jul 17, 2020

Triad Data Available Upon Request

Signature on file
Approved for Release

Airgas Specialty Gases
Airgas USA, LLC
616 Miller Cut Off Road
La Porte, TX 77571
Airgas.com

CERTIFICATE OF ANALYSIS

Grade of Product: CERTIFIED STANDARD-SPEC

Customer:	*C140* AIRGAS ODESSA , TX*		
Part Number:	X02NI99C15A1268	Reference Number:	126-402060995-1
Cylinder Number:	CC57175	Cylinder Volume:	144.4 CF
Laboratory:	124 - La Porte Mix - TX	Cylinder Pressure:	2015 PSIG
Analysis Date:	Mar 16, 2021	Valve Outlet:	350
Lot Number:	126-402060995-1		

Expiration Date: Mar 16, 2024

Product composition verified by direct comparison to calibration standards traceable to N.I.S.T. weights and/or N.I.S.T. Gas Mixture reference materials.

ANALYTICAL RESULTS

Component	Req Conc	Actual Concentration (Mole %)	Analytical Uncertainty
ETHYLENE	100.0 PPM	100.1 PPM	+/- 2%
NITROGEN	Balance		

Signature on file
Approved for Release

RED BALL TECHNICAL GAS SERVICES

PJLA Calibration and Testing
Accreditation #62754

Red Ball Technical Gas Service
555 Craig Kennedy Way
Shreveport, LA 71107
800-551-8150
PGVP Vendor ID # G12018

CERTIFIED GAS CERTIFICATE OF ANALYSIS

Cylinder Number:	CC719176	**Certification Date:**	09/10/2018
Product ID Number:	126627	**Expiration Date:**	09/09/2021
Cylinder Pressure:	1900 PSIG	**MFG Facility:**	- Shreveport - LA
COA #	CC719176.20180822-0	**Lot Number:**	CC719176.20180822
Customer PO. NO.:		**Tracking Number:**	098506769
Customer:		**Previous Certification Dates:**	

This mixture is for laboratory use only, not for drug, household or other use.
This mixture is certified in Mole % to be within ±2% of the actual number reported with a confidence of 95%.
This mixture was manufactured by scale; weights traceable to N.I.S.T. Certificate #822/266926-02.
Do Not Use This Cylinder Below 100 psig (0.7 Megapascal).

Certified Concentration(s)

Component	Concentration	Uncertainty	Analytical Principle
Nitrogen Dioxide	**1040 PPM**	± 2% NIST	FTIR
Oxygen	**79.2 %**	± 2% NIST	MPA
Nitrogen	Balance		

Analytical Measurement Data Available Online.

Reference Standard(s)

Serial Number	Lot	Expiration	Type	Balance	Component	Concentration	Uncertainty(%)	NIST Reference
EB0032246	EB0032246.20170209	08/05/2025	GMIS	N2	O2	24 %	0.502	071001
EB0034340	EB0034340.20170209	05/09/2026	GMIS	N2	O2	20 %	0.5	071001
EB0049759	EB0049759.20161128	11/28/2019	PS	AIR	NO2	1999.4 PPM	0	061002

Analytical Instrumentation

Component	Principle	Make	Model	Serial	MPC Date
O2	MPA	Thermo	410i	1162980025	09/04/2018
NO2	FTIR	MKS	MKS 2031DJG2EKVS13T	017146467	

SMART-CERT

This is to certify the gases referenced have been calibrated/tested, and verified to meet the defined specifications. This calibration/test was performed using Gases or Scales that are traceable through National Institute of Standards and Technology (NIST) to the International System of Units (SI). The basis of compliance stated is a comparison of the measurement parameters to the specified or required calibration/testing process. The expanded uncertainties use a coverage factor of k=2 to approximate the 95% confidence level of the measurement, unless otherwise noted. This calibration certificate applies only to the item described and shall not be reproduced other than in full, without written approval from Red Ball Technical Gas Services. If not included, the uncertainty of calibrations are available upon request and were taken into account when determining pass or fail.

Amisha Jewitt
Analytical Chemist
Assay Laboratory: Red Ball TGS
Version 02-G, Revised on 2017-07-02

6.3 Equations with Example Calculations from Test Data

Analyzer Calibration Error *- RM 7E, (08-15-06), 12.2 Analyzer Calibration Error. For non-dilution systems,* use Equation 7E-1 to calculate the analyzer calibration error for the low-,mid-, and high-level calibration gases. (calc for O_2 analyzer mid gas, if applicable). Eq. 7E-1

$$ACE = \left(\frac{C_{Dir} - C_v}{CS}\right) \times 100$$

ACE (%) = (19.87 % - 20.00 % / 20.00 %) x 100.00 = -0.66%

System Bias *- RM 7E, (08-15-06), 12.3 System Bias. For non-dilution systems, use Equation 7E-2 to calculate the system bias separately for the low-level and upscale calibration gases. (calc for O_2 analyzer upscale gas, Run 1 initial bias, if applicable). Eq. 7E-2*

$$SB = \left(\frac{C_S - C_{Dir}}{CS}\right) \times 100$$

SB = (8.73 % - 8.86 % / 9.00 %) X 100.00 = -0.65%

Drift Assessment *- RM 7E, (08-15-06), 12.5 Drift Assessment. Use Equation 7E-4 to separately calculate the low-level and upscale drift over each test run. (calc for O_2 analyzer upscale drift). Eq. 7E-4.*

$$D = |SB_f - SB_i|$$

D = | -0.70% - -0.65% | = -0.05%

Bias Adjusted Average *- RM 7E, (08-15-06), 12.6 Effluent Gas Concentration. For each test, calculate Cavg, the arithmetic average of all valid O_2 concentration values (e.g., 1-minute averages). Then adjust the value of Cavg for bias, using Equation 7E-5. (calc for O_2 analyzer, Run 1, if applicable)*

$$C_{Gas} = (C_{Avg} - C_o) \times \left(\frac{C_{MA}}{C_M - C_o}\right)$$

C_{gas} = (16.46% - -0.06%) x 9.00 % / 8.73 % - -0.06 % = 16.92 %

Diluent-Corrected Pollutant Concentration *, O2 Based - RM 20, (11-26-02), 7.3.1 Correction of Pollutant Concentration Using O_2 Concentration. Calculate the O_2 corrected pollutant concentration, as follows: (calc for CO gas, Run 1, if applicable. Eq. 20-4*

$$C_{adj} = CGas_{(Target)} \times \left(\frac{20.9\% - AdjFactor}{20.9\% - CGas_{(O2)}}\right)$$

C_{adj} = 1.63 ppm x (20.9% - 15.00 % / 20.9% - 16.92 %) = 2.42 ppm

6.4 Nomenclature

ASTM Method D 6348-03, (10-01-03), 12.1 Nomenclature. The terms used in the equations are defined as follows:

{Ar/Af} = ratio of the reference CTS absorbance to the fundamental CTS absorbance, determined by classical least squares, integrated absorbance area, spectral subtraction, or peak absorbance techniques.

{As/Ar} = ratio of the sample CTS absorbance to the reference CTS absorbance, determined by classical least squares, integrated absorbance area, spectral subtraction, or peak absorbance techniques.

C_{ave}^{m} = average concentration for analyte m representing the Analytical Bias for this compound

C_f = concentration of the fundamental CTS gas

C_p^{m} = concentration results produced by the analytical algorithm for target analyte m on spectrum p of the set used to calculate Analytical Bias

C_r = concentration of the reference CTS gas

C_{ref} = is the concentration that was used in generating the reference spectrum for analyte m

C_s = concentration of the sample CTS gas

CTS = Calibration Transfer Standard (normally 100 ppm Ethylene balance nitrogen)

DF = the dilution factor of the spike gas, should approximate 0.1 or less

L_{cell} = is the path length of the cell which is to be used to perform the measurements

L_f = fundamental CTS absorption path length

L_r = Reference cell absorption path length

L_{ref} = is the path length that was used in generating the reference spectrum of analyte m

L_s = sample cell absorption path length

MDC#1 = the noise limited minimum detectable concentration for analyte m (ppm)

N = the number of absorbance points in the analysis region for analyte m

NEA_i^{m} = the individual absorbance values of the noise spectrum in the analysis region used for analyte m

NEA_{rms}^{m} = the root mean square absorbance value obtained on the reference spectrum for the same analysis region as used in evaluating A2.1

P = number of sample spectra used to calculate Analytical Bias

P_f = absolute pressure of fundamental CTS gas

P_r = absolute pressure of reference CTS gas

P_s = absolute pressure of sample CTS gas

%R = percent recovery of the spiked analytes into effluent stream

$[SF_6]_{direct}$ = the SF6 concentration measured directly in undiluted spike gas

$[SF_6]_{spike}$ = the SF6 concentration measured in a spiked sample

T_f = absolute temperature of fundamental CTS gas

T_r = absolute temperature of reference CTS gas

T_s = absolute temperature of sample CTS gas

U_a = concentration of the analytes in the unspiked samples

U_{dil} = concentration of analytes in spiked sample effluent accounting for dilution

RM 7E, (08-15-06), 12.1 Nomenclature. The terms used in the equations are defined as follows:

ACE = Analyzer calibration error, percent of calibration span.

B_{WS} = Moisture content of sample gas as measured by Method 4 or other approved method, percent/100.

C_{Avg} = Average unadjusted gas concentration indicated by data recorder for the test run.

C_D = Pollutant concentration adjusted to dry conditions.

C_{Dir} = Measured concentration of a calibration gas (low, mid, or high) when introduced in direct calibration mode.

C_{Gas} = Average effluent gas concentration adjusted for bias.

C_M = Average of initial and final system calibration bias (or 2-point system calibration error) check responses for the upscale calibration gas.

CMA = Actual concentration of the upscale calibration gas, ppmv.

C_O = Average of the initial and final system calibration bias (or 2-point system calibration error) check responses from the low-level (or zero) calibration gas.

C_S = Measured concentration of a calibration gas (low, mid, or high) when introduced in system calibration mode.
C_{SS} = Concentration of NOx measured in the spiked sample.
C_{Spike} = Concentration of NOx in the undiluted spike gas.
C_{Calc} = Calculated concentration of NOx in the spike gas diluted in the sample.
C_V = Manufacturer certified concentration of a calibration gas (low, mid, or high).
C_W = Pollutant concentration measured under moist sample conditions, wet basis.
CS = Calibration span.
D = Drift assessment, percent of calibration span.
E_p = The predicted response for the low-level and mid-level gases based on a linear response line between the zero and high-level response.
H = High calibration gas, designator.
L = Low calibration gas, designator.
M = Mid calibration gas, designator.
Q_{Spike} = Flow rate of spike gas introduced in system calibration mode, L/min.
Q_{Total} = Total sample flow rate during the spike test, L/min.
R = Spike recovery, percent.
SB = System bias, percent of calibration span.
SB_i = Pre-run system bias, percent of calibration span.
SB_f = Post-run system bias, percent of calibration span.
SB / D_{Alt} = Alternative absolute difference criteria to pass bias and/or drift checks.
SCE = System calibration error, percent of calibration span.
SCE_i = Pre-run system calibration error, percent of calibration span.
SCE_{final} = Post-run system calibration error, percent of calibration span.
Z = Zero calibration gas, designator.

Small Engine. The terms used in the equations are defined as follows:
bhp = brake horsepower
hp = horsepower

40 CFR 60 Subpart JJJJ §60.4244 Nomenclature. The terms used in the equations are defined as follows:
C_D = Measured concentration of NOx, CO, and VOC.
Conversion Constant = 1.912×10^{-3} for ppm NO_x, 1.164×10^{-3} for ppm CO, 1.833×10^{-3} for ppm VOC
Q = Stack gas volumetric flow rate, in standard cubic meters per hour, dry basis.
T = Time of test run, in hours.
Hp-hr = Brake work of the engine, in Hp-hr.

6.5 Engine Data - Manufacturer's Ratings and Specifications,

Solar® Turbines
A Caterpillar Company

CENTAUR 40
Gas Turbine Compressor Set

Oil & Gas Applications

Performance

Output Power	3500 kW (4700hp)
Heat Rate	12 905 kJ/kW-hr (9,125 Btu/hp-hr)
Exhaust Flow	68 185 kg/hr (150,320 lb/hr)
Exhaust Temp.	450°C (835°F)

Nominal Rating – per ISO
At 15°C (59°F), at sea level
No inlet/exhaust losses
Relative humidity 60%
Natural gas fuel with
LHV = 35 MJ/nm³ (940 Btu/scf)
Optimum power turbine speed
AC-driven accessories
Engine efficiency: 27.9%

Available Power

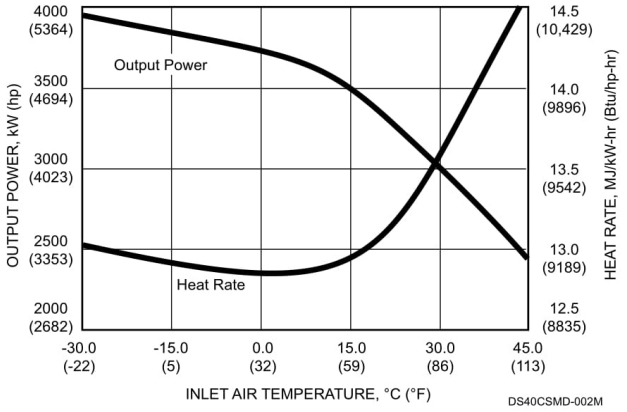

Package Dimensions*

Length: 6.0 m (19' 9")
Width: 2.5 m (8' 1")
Height: 2.7 m (8' 11")
Typical Weight: 14 970 kg (33,000 lb)

** Driver package only*

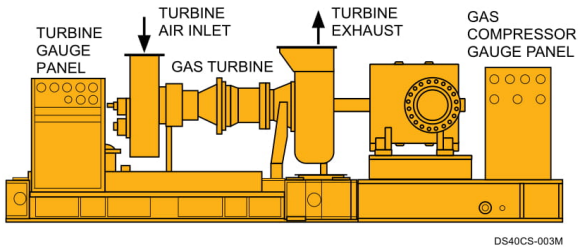

Solar Turbines Incorporated
P.O. Box 85376
San Diego, CA 92186-5376
Caterpillar is a trademark of Caterpillar Inc.
Solar, Centaur, SoLoNOx and *Turbotronic* are trademarks of Solar Turbines Incorporated.
Specifications subject to change without notice. Printed in U.S.A.
© 2011Solar Turbines Incorporated. All rights reserved.
DS40CS/1111/EO

FOR MORE INFORMATION
Telephone: (+1) 619-544-5352
Internet: www.solarturbines.com

6.6 Site Specific Photographs





6.7 Résumés

Kyle Pier

Employment

BAIR (October 2019-current)

Types of Sources Tested

Stationary Internal Combustion Engines

- 4 Stroke Rich Burn Engines
- 2 Stroke and 4 Stroke Lean Burn Engines

Stationary Gas Turbines

Gas-Fired Boilers and Process Heaters

Types of Analyzers

- Ecom A+ and J2KN models
- Testo 350XL
- VIG Flame Ionization Model 210 Gas Chromatograph
- MKS FTIR MultiGas 2030

Qualifications

Proficient at demonstrating compliance for stack testing via the data collection objectives for quality assurance outlined in the following Reference Methods:

- 1-Traverse Points
- 3A-O2 (Instrumental)
- 7E-NOx (Instrumental)
- 10-Carbon Monoxide (Instrumental)
- 18-VOC by GC
- 20-NOx from Stationary Gas Turbines
- 25A-VOC by GC
- ASTM D6348 Determination of Gaseous Compounds by Extractive Direct Interface Fourier Transform Infrared (FTIR) Spectroscopy.

Conducted the following types of tests in Texas, Louisiana, Oklahoma, Arkansas, and Kansas according to Federal and State requirements as applicable (i.e. NSPS, JJJJ, TAC 106 and TAC 117):

- Initial Compliance
- Biennial Compliance
- Semiannual Compliance
- Quarterly Compliance

Continuing Education

- Receive quarterly training on changes to Reference Methods, State guidance for analytical purposes, and operational and safety issues pertaining to pipeline transportation of natural gas.

6.8 Analyzer Raw Data Logs

Spectrum	Date	Time	NO (350,300	NO2 (150) 19	H2O% (40) 1	CO (500) 191	CO ppm Dry	NO Dry	NO2 Dry	NOx Dry	O2 Dry
RM205_0000.LAB	6/9/2021	9:07:28 AM	NaN	NaN	41.40	NaN	0.00	0.00	0.00	0.00	17.73
RM205_0001.LAB	6/9/2021	9:07:35 AM	NaN	NaN	41.40	NaN	0.00	0.00	0.00	0.00	17.88
RM205_0002.LAB	6/9/2021	9:07:43 AM	NaN	NaN	41.40	NaN	0.00	0.00	0.00	0.00	17.91
RM205_0003.LAB	6/9/2021	9:07:51 AM	NaN	NaN	41.40	NaN	0.00	0.00	0.00	0.00	19.21
RM205_0004.LAB	6/9/2021	9:07:58 AM	NaN	NaN	41.40	NaN	0.00	0.00	0.00	0.00	19.86
RM205_0005.LAB	6/9/2021	9:08:05 AM	NaN	NaN	41.40	NaN	0.00	0.00	0.00	0.00	19.91
RM205_0006.LAB	6/9/2021	9:08:13 AM	NaN	NaN	41.40	NaN	0.00	0.00	0.00	0.00	19.91
RM205_0007.LAB	6/9/2021	9:08:20 AM	NaN	NaN	41.40	NaN	0.00	0.00	0.00	0.00	19.91
RM205_0008.LAB	6/9/2021	9:08:28 AM	NaN	NaN	41.40	NaN	0.00	0.00	0.00	0.00	19.90
RM205_0009.LAB	6/9/2021	9:08:36 AM	NaN	NaN	41.40	NaN	0.00	0.00	0.00	0.00	19.89
RM205_0010.LAB	6/9/2021	9:08:43 AM	NaN	NaN	41.40	NaN	0.00	0.00	0.00	0.00	19.90
RM205_0011.LAB	6/9/2021	9:08:51 AM	NaN	NaN	41.40	NaN	0.00	0.00	0.00	0.00	19.91
RM205_0012.LAB	6/9/2021	9:08:58 AM	NaN	NaN	41.40	NaN	0.00	0.00	0.00	0.00	2.55
RM205_0013.LAB	6/9/2021	9:09:06 AM	NaN	NaN	41.40	NaN	0.00	0.00	0.00	0.00	0.08
RM205_0014.LAB	6/9/2021	9:09:13 AM	NaN	NaN	41.40	NaN	0.00	0.00	0.00	0.00	0.03
RM205_0015.LAB	6/9/2021	9:09:21 AM	NaN	NaN	41.40	NaN	0.00	0.00	0.00	0.00	0.01
RM205_0016.LAB	6/9/2021	9:09:28 AM	NaN	NaN	41.40	NaN	0.00	0.00	0.00	0.00	0.01
RM205_0017.LAB	6/9/2021	9:09:36 AM	NaN	NaN	41.40	NaN	0.00	0.00	0.00	0.00	0.01
RM205_0018.LAB	6/9/2021	9:09:43 AM	NaN	NaN	41.40	NaN	0.00	0.00	0.00	0.00	19.56
RM205_0019.LAB	6/9/2021	9:09:51 AM	NaN	NaN	41.40	NaN	0.00	0.00	0.00	0.00	19.85
RM205_0020.LAB	6/9/2021	9:09:58 AM	NaN	NaN	41.40	NaN	0.00	0.00	0.00	0.00	19.90
RM205_0021.LAB	6/9/2021	9:10:06 AM	NaN	NaN	41.40	NaN	0.00	0.00	0.00	0.00	19.90
RM205_0022.LAB	6/9/2021	9:10:13 AM	NaN	NaN	41.40	NaN	0.00	0.00	0.00	0.00	19.90
RM205_0023.LAB	6/9/2021	9:10:21 AM	NaN	NaN	41.40	NaN	0.00	0.00	0.00	0.00	19.90
RM205_0024.LAB	6/9/2021	9:10:28 AM	NaN	NaN	41.40	NaN	0.00	0.00	0.00	0.00	0.37
RM205_0025.LAB	6/9/2021	9:10:36 AM	NaN	NaN	41.40	NaN	0.00	0.00	0.00	0.00	0.04
RM205_0026.LAB	6/9/2021	9:10:44 AM	NaN	NaN	41.40	NaN	0.00	0.00	0.00	0.00	0.02
RM205_0027.LAB	6/9/2021	9:10:51 AM	NaN	NaN	41.40	NaN	0.00	0.00	0.00	0.00	11.32
RM205_0028.LAB	6/9/2021	9:10:58 AM	NaN	NaN	41.40	NaN	0.00	0.00	0.00	0.00	19.76
RM205_0029.LAB	6/9/2021	9:11:06 AM	11.95	-4.84	1.55	44.47	45.17	12.13	-4.92	7.21	19.91
RM205_0030.LAB	6/9/2021	9:11:13 AM	9.78	0.89	2.26	0.17	0.17	10.00	0.91	10.91	19.90
RM205_0031.LAB	6/9/2021	9:11:21 AM	3.04	-0.79	2.33	10.96	11.22	3.12	-0.81	2.30	19.91
RM205_0032.LAB	6/9/2021	9:11:28 AM	0.70	0.17	1.94	1.89	1.93	0.72	0.17	0.89	19.90
RM205_0033.LAB	6/9/2021	9:11:36 AM	-1.38	0.96	2.00	1.67	1.70	-1.41	0.98	-0.43	19.91
RM205_0034.LAB	6/9/2021	9:11:43 AM	-0.12	0.76	1.85	2.66	2.71	-0.12	0.78	0.66	0.20
RM205_0035.LAB	6/9/2021	9:11:51 AM	-3.03	0.00	2.22	5.51	5.63	-3.10	0.00	-3.09	0.04
RM205_0036.LAB	6/9/2021	9:11:58 AM	9.97	-1.73	2.62	13.23	13.59	10.23	-1.78	8.45	9.55
RM205_0037.LAB	6/9/2021	9:12:06 AM	13.64	1.90	2.28	5.77	5.90	13.96	1.94	15.90	8.95
RM205_0038.LAB	6/9/2021	9:12:13 AM	5.47	0.03	2.26	6.17	6.31	5.60	0.03	5.62	8.89
RM205_0039.LAB	6/9/2021	9:12:21 AM	7.46	0.19	2.24	7.79	7.97	7.63	0.20	7.82	8.89
RM205_0040.LAB	6/9/2021	9:12:28 AM	4.85	0.20	2.35	8.23	8.43	4.97	0.21	5.18	8.89
RM205_0041.LAB	6/9/2021	9:12:36 AM	4.24	0.02	2.37	7.22	7.40	4.35	0.02	4.37	8.89
RM205_0042.LAB	6/9/2021	9:12:43 AM	4.70	0.11	2.34	6.84	7.00	4.81	0.11	4.93	0.32
RM205_0043.LAB	6/9/2021	9:12:51 AM	5.01	-0.05	2.38	7.13	7.30	5.14	-0.05	5.09	0.02
RM205_0044.LAB	6/9/2021	9:12:58 AM	4.18	-0.07	2.38	7.43	7.61	4.28	-0.07	4.20	0.01
RM205_0045.LAB	6/9/2021	9:13:06 AM	4.78	0.26	2.40	6.92	7.09	4.90	0.27	5.16	0.42
RM205_0046.LAB	6/9/2021	9:13:14 AM	4.22	0.10	2.42	7.43	7.62	4.33	0.10	4.43	9.13
RM205_0047.LAB	6/9/2021	9:13:21 AM	4.53	0.33	2.40	7.60	7.79	4.64	0.34	4.97	8.93
RM205_0048.LAB	6/9/2021	9:13:28 AM	4.69	0.24	2.40	7.27	7.45	4.80	0.25	5.05	8.91
RM205_0049.LAB	6/9/2021	9:13:36 AM	4.30	-0.01	2.40	6.28	6.44	4.41	-0.01	4.40	8.90
RM205_0050.LAB	6/9/2021	9:13:43 AM	4.58	0.17	2.39	6.67	6.83	4.69	0.17	4.86	8.90
RM205_0051.LAB	6/9/2021	9:13:51 AM	4.35	0.14	2.42	6.76	6.93	4.46	0.14	4.61	8.90
RM205_0052.LAB	6/9/2021	9:13:58 AM	4.83	-0.03	2.40	7.27	7.45	4.95	-0.03	4.93	0.13
RM205_0053.LAB	6/9/2021	9:14:06 AM	4.11	0.39	2.41	6.77	6.94	4.21	0.40	4.60	9.29
RM205_0054.LAB	6/9/2021	9:14:13 AM	4.15	0.06	2.41	6.87	7.04	4.25	0.07	4.32	8.97
RM205_0055.LAB	6/9/2021	9:14:21 AM	4.75	0.19	2.42	7.05	7.23	4.87	0.19	5.06	8.90
RM205_0056.LAB	6/9/2021	9:14:28 AM	4.14	0.41	2.44	6.60	6.76	4.25	0.42	4.67	8.89
RM205_0057.LAB	6/9/2021	9:14:36 AM	4.55	0.05	2.42	6.45	6.61	4.67	0.05	4.71	8.90
RM205_0058.LAB	6/9/2021	9:14:44 AM	4.56	0.12	2.39	7.56	7.75	4.67	0.12	4.79	8.89
RM205_0059.LAB	6/9/2021	9:14:51 AM	4.79	0.21	2.42	7.12	7.30	4.91	0.21	5.13	0.13
RM205_0060.LAB	6/9/2021	9:14:59 AM	4.55	0.24	2.45	7.55	7.74	4.67	0.25	4.91	0.01
RM205_0061.LAB	6/9/2021	9:15:06 AM	4.85	0.16	2.42	7.08	7.26	4.97	0.17	5.14	0.01
RM205_0062.LAB	6/9/2021	9:15:14 AM	4.07	0.20	2.39	6.71	6.87	4.17	0.21	4.38	0.01
RM205_0063.LAB	6/9/2021	9:15:21 AM	4.39	0.18	2.46	7.04	7.22	4.50	0.19	4.69	0.01
RM205_0064.LAB	6/9/2021	9:15:29 AM	4.37	0.17	2.41	6.63	6.79	4.48	0.18	4.66	0.00

RM205_0065.LAB	6/9/2021	9:15:36 AM	4.83	0.11	2.43	7.81	8.00	4.95	0.11	5.06	9.62
RM205_0066.LAB	6/9/2021	9:15:44 AM	5.22	0.09	2.43	7.12	7.30	5.35	0.09	5.45	8.45
RM205_0067.LAB	6/9/2021	9:15:51 AM	5.13	0.13	2.38	6.83	7.00	5.25	0.14	5.39	8.99
RM205_0068.LAB	6/9/2021	9:15:59 AM	4.76	0.08	2.40	7.40	7.58	4.88	0.08	4.96	9.00
RM205_0069.LAB	6/9/2021	9:16:06 AM	4.65	-0.07	2.40	6.98	7.15	4.76	-0.07	4.69	9.00
RM205_0070.LAB	6/9/2021	9:16:14 AM	4.20	0.18	2.42	7.26	7.44	4.30	0.19	4.49	9.00
RM205_0071.LAB	6/9/2021	9:16:22 AM	4.42	-0.03	2.45	7.30	7.49	4.53	-0.03	4.50	9.00
RM205_0072.LAB	6/9/2021	9:16:29 AM	5.01	0.00	2.43	7.53	7.72	5.14	0.01	5.14	0.10
RM205_0073.LAB	6/9/2021	9:16:36 AM	4.83	0.19	2.41	7.19	7.36	4.95	0.20	5.15	0.04
RM205_0074.LAB	6/9/2021	9:16:44 AM	4.43	0.29	2.41	7.27	7.45	4.54	0.29	4.83	8.90
RM205_0075.LAB	6/9/2021	9:16:51 AM	4.35	0.14	2.41	7.29	7.47	4.46	0.15	4.61	8.99
RM205_0076.LAB	6/9/2021	9:16:59 AM	4.59	-0.01	2.42	7.57	7.75	4.70	-0.01	4.69	9.00
RM205_0077.LAB	6/9/2021	9:17:06 AM	4.17	0.08	2.42	6.74	6.91	4.27	0.08	4.35	9.00
RM205_0078.LAB	6/9/2021	9:17:14 AM	5.07	0.07	2.42	7.60	7.79	5.19	0.07	5.26	9.00
RM205_0079.LAB	6/9/2021	9:17:21 AM	5.31	0.15	2.43	6.90	7.07	5.44	0.16	5.60	9.00
RM205_0080.LAB	6/9/2021	9:17:29 AM	4.55	0.00	2.48	7.17	7.35	4.66	0.00	4.67	4.61
RM205_0081.LAB	6/9/2021	9:17:37 AM	3.62	0.17	2.49	7.46	7.65	3.72	0.17	3.89	0.39
RM205_0082.LAB	6/9/2021	9:17:44 AM	4.12	0.05	2.47	7.31	7.50	4.23	0.05	4.28	0.01
RM205_0083.LAB	6/9/2021	9:17:51 AM	4.31	0.12	2.46	7.55	7.74	4.41	0.12	4.54	0.01
RM205_0084.LAB	6/9/2021	9:17:59 AM	4.84	0.32	2.42	7.13	7.30	4.96	0.33	5.30	8.78
RM205_0085.LAB	6/9/2021	9:18:06 AM	3.92	0.05	2.45	7.30	7.48	4.02	0.06	4.08	9.00
RM205_0086.LAB	6/9/2021	9:18:14 AM	4.49	0.19	2.46	6.88	7.06	4.60	0.20	4.80	9.00
RM205_0087.LAB	6/9/2021	9:18:21 AM	4.08	0.26	2.44	7.17	7.35	4.19	0.27	4.46	8.99
RM205_0088.LAB	6/9/2021	9:18:29 AM	3.94	0.39	2.47	6.70	6.86	4.04	0.40	4.44	9.00
RM205_0089.LAB	6/9/2021	9:18:36 AM	3.91	0.29	2.43	7.53	7.72	4.00	0.30	4.30	9.00

Spectrum	Date	Time	NO (350,300	NO2 (150) 19	H2O% (40) 1	CO (500) 191	CO ppm Dry	NO Dry	NO2 Dry	NOx Dry	O2 Dry
PRE_ACE_DIRECT_0090.LAB	6/9/2021	9:19:56 AM	4.72	0.26	2.46	7.58	7.77	4.84	0.27	5.11	0.00
PRE_ACE_DIRECT_0091.LAB	6/9/2021	9:20:04 AM	5.00	0.23	2.44	7.33	7.52	5.13	0.23	5.36	0.00
PRE_ACE_DIRECT_0092.LAB	6/9/2021	9:20:11 AM	4.50	0.39	2.45	7.64	7.83	4.62	0.40	5.01	0.00
PRE_ACE_DIRECT_0093.LAB	6/9/2021	9:20:19 AM	4.06	0.23	2.43	7.50	7.68	4.16	0.23	4.39	0.00
PRE_ACE_DIRECT_0094.LAB	6/9/2021	9:20:26 AM	4.97	0.17	2.42	7.01	7.18	5.10	0.17	5.27	0.00
PRE_ACE_DIRECT_0095.LAB	6/9/2021	9:20:34 AM	4.59	0.02	2.42	7.14	7.32	4.70	0.02	4.72	0.00
PRE_ACE_DIRECT_0096.LAB	6/9/2021	9:20:41 AM	4.39	0.07	2.41	7.33	7.51	4.50	0.08	4.58	0.00
PRE_ACE_DIRECT_0097.LAB	6/9/2021	9:20:49 AM	5.10	0.22	2.43	7.79	7.99	5.23	0.22	5.45	0.00
PRE_ACE_DIRECT_0098.LAB	6/9/2021	9:20:56 AM	4.29	0.32	2.45	7.46	7.65	4.39	0.33	4.72	19.72
PRE_ACE_DIRECT_0099.LAB	6/9/2021	9:21:04 AM	4.54	0.22	2.41	7.56	7.75	4.65	0.23	4.88	19.80
PRE_ACE_DIRECT_0100.LAB	6/9/2021	9:21:11 AM	4.28	0.05	2.46	7.97	8.17	4.39	0.06	4.44	19.88
PRE_ACE_DIRECT_0101.LAB	6/9/2021	9:21:19 AM	4.60	0.20	2.44	7.77	7.96	4.71	0.21	4.92	19.90
PRE_ACE_DIRECT_0102.LAB	6/9/2021	9:21:26 AM	4.70	0.16	2.43	7.00	7.18	4.82	0.16	4.98	19.90
PRE_ACE_DIRECT_0103.LAB	6/9/2021	9:21:34 AM	4.00	0.24	2.45	7.21	7.39	4.10	0.25	4.35	19.91
PRE_ACE_DIRECT_0104.LAB	6/9/2021	9:21:42 AM	4.07	0.20	2.44	7.40	7.59	4.17	0.20	4.38	19.91
PRE_ACE_DIRECT_0105.LAB	6/9/2021	9:21:49 AM	4.90	0.22	2.44	7.69	7.88	5.03	0.23	5.25	8.87
PRE_ACE_DIRECT_0106.LAB	6/9/2021	9:21:56 AM	4.25	-0.03	2.44	7.41	7.59	4.35	-0.03	4.33	8.85
PRE_ACE_DIRECT_0107.LAB	6/9/2021	9:22:04 AM	4.74	0.16	2.46	7.54	7.73	4.86	0.17	5.03	8.87
PRE_ACE_DIRECT_0108.LAB	6/9/2021	9:22:11 AM	4.26	0.17	2.44	7.19	7.37	4.37	0.18	4.55	8.88
PRE_ACE_DIRECT_0109.LAB	6/9/2021	9:22:19 AM	4.21	0.10	2.46	7.60	7.79	4.32	0.10	4.42	8.88
PRE_ACE_DIRECT_0110.LAB	6/9/2021	9:22:26 AM	4.84	0.22	2.46	6.85	7.02	4.96	0.23	5.18	8.88
PRE_ACE_DIRECT_0111.LAB	6/9/2021	9:22:34 AM	4.38	0.19	2.43	8.00	8.20	4.49	0.19	4.68	0.41
PRE_ACE_DIRECT_0112.LAB	6/9/2021	9:22:42 AM	4.25	1.03	2.38	6.61	6.77	4.35	1.06	5.41	0.04
PRE_ACE_DIRECT_0113.LAB	6/9/2021	9:22:49 AM	-0.13	3.77	0.25	1.69	1.70	-0.13	3.78	3.66	10.10
PRE_ACE_DIRECT_0114.LAB	6/9/2021	9:22:56 AM	-0.33	0.24	0.03	-0.10	-0.10	-0.33	0.24	-0.09	0.11
PRE_ACE_DIRECT_0115BKG.LAB	6/9/2021	9:25:10 AM	0.00	0.00	0.00	0.00	0.00	0.00	0.00	0.00	-0.06
PRE_ACE_DIRECT_0116.LAB	6/9/2021	9:25:24 AM	0.24	0.13	0.00	-0.61	-0.61	0.24	0.13	0.37	-0.06
PRE_ACE_DIRECT_0117.LAB	6/9/2021	9:25:31 AM	0.24	0.10	0.01	-0.31	-0.31	0.24	0.10	0.35	-0.06
PRE_ACE_DIRECT_0118.LAB	6/9/2021	9:25:39 AM	0.35	-0.03	0.00	0.42	0.42	0.35	-0.03	0.31	-0.06
PRE_ACE_DIRECT_0119.LAB	6/9/2021	9:25:47 AM	-0.43	0.06	0.01	0.28	0.28	-0.43	0.06	-0.37	-0.06
PRE_ACE_DIRECT_0120.LAB	6/9/2021	9:25:54 AM	0.71	0.09	0.02	0.76	0.76	0.71	0.09	0.80	-0.06
PRE_ACE_DIRECT_0121.LAB	6/9/2021	9:26:01 AM	0.03	-0.14	0.01	-0.39	-0.39	0.03	-0.14	-0.11	-0.06
PRE_ACE_DIRECT_0122.LAB	6/9/2021	9:26:09 AM	-0.36	0.01	-0.02	-1.21	-1.21	-0.36	0.01	-0.34	-0.06
PRE_ACE_DIRECT_0123.LAB	6/9/2021	9:26:17 AM	0.28	0.01	-0.01	0.08	0.08	0.28	0.01	0.29	-0.06
PRE_ACE_DIRECT_0124.LAB	6/9/2021	9:27:17 AM	0.62	0.01	0.00	0.56	0.56	0.62	0.01	0.63	0.57
PRE_ACE_DIRECT_0125.LAB	6/9/2021	9:27:24 AM	0.21	0.08	0.00	0.03	0.03	0.21	0.08	0.29	0.26
PRE_ACE_DIRECT_0126.LAB	6/9/2021	9:27:31 AM	0.84	0.06	0.01	0.22	0.22	0.84	0.06	0.90	-0.06
PRE_ACE_DIRECT_0127.LAB	6/9/2021	9:27:39 AM	0.53	0.08	0.01	0.39	0.39	0.53	0.08	0.62	-0.06
PRE_ACE_DIRECT_0128.LAB	6/9/2021	9:27:47 AM	0.54	0.09	-0.01	0.46	0.46	0.54	0.09	0.63	-0.06

PRE_ACE_DIRECT_0129.LAB	6/9/2021	9:27:54 AM	0.31	0.03	0.01	0.21	0.21	0.31	0.03	0.34	-0.06
PRE_ACE_DIRECT_0130.LAB	6/9/2021	9:28:02 AM	-0.14	0.15	-0.01	-0.43	-0.43	-0.14	0.15	0.02	-0.06
PRE_ACE_DIRECT_0131.LAB	6/9/2021	9:28:09 AM	0.38	-0.03	-0.01	0.14	0.14	0.38	-0.03	0.35	-0.06
PRE_ACE_DIRECT_0132.LAB	6/9/2021	9:28:17 AM	-0.36	0.02	-0.02	0.18	0.18	-0.36	0.02	-0.34	-0.06
PRE_ACE_DIRECT_0133.LAB	6/9/2021	9:28:24 AM	0.23	-0.05	-0.01	0.09	0.09	0.23	-0.05	0.18	-0.06
PRE_ACE_DIRECT_0134.LAB	6/9/2021	9:29:24 AM	14.01	72.22	0.00	73.50	73.51	14.01	72.23	86.23	3.55
PRE_ACE_DIRECT_0135.LAB	6/9/2021	9:29:32 AM	74.04	107.70	0.03	212.60	212.66	74.06	107.74	181.80	0.50
PRE_ACE_DIRECT_0136.LAB	6/9/2021	9:29:39 AM	175.46	21.64	0.00	212.90	212.90	175.45	21.64	197.09	0.00
PRE_ACE_DIRECT_0137.LAB	6/9/2021	9:29:47 AM	191.59	6.59	-0.01	212.38	212.35	191.56	6.59	198.15	-0.03
PRE_ACE_DIRECT_0138.LAB	6/9/2021	9:29:54 AM	193.95	5.33	-0.02	213.96	213.92	193.92	5.33	199.25	-0.03
PRE_ACE_DIRECT_0139.LAB	6/9/2021	9:30:02 AM	192.37	4.66	-0.03	211.08	211.02	192.31	4.66	196.97	-0.04
PRE_ACE_DIRECT_0140.LAB	6/9/2021	9:30:09 AM	192.38	4.53	0.00	213.71	213.70	192.37	4.53	196.91	-0.04
PRE_ACE_DIRECT_0141.LAB	6/9/2021	9:30:17 AM	193.67	4.15	0.00	212.85	212.85	193.68	4.15	197.83	-0.04
PRE_ACE_DIRECT_0142.LAB	6/9/2021	9:30:24 AM	195.91	4.10	0.00	216.01	216.01	195.91	4.10	200.02	-0.04
PRE_ACE_DIRECT_0143.LAB	6/9/2021	9:30:32 AM	196.00	4.00	0.00	215.82	215.83	196.00	4.00	200.00	-0.05
PRE_ACE_DIRECT_0144.LAB	6/9/2021	9:30:40 AM	196.51	3.73	-0.02	215.76	215.73	196.48	3.73	200.21	-0.05
PRE_ACE_DIRECT_0145.LAB	6/9/2021	9:30:47 AM	194.95	3.53	0.00	216.57	216.56	194.95	3.53	198.48	-0.04
PRE_ACE_DIRECT_0146.LAB	6/9/2021	9:30:54 AM	194.75	3.49	-0.01	215.44	215.42	194.73	3.49	198.23	-0.05
PRE_ACE_DIRECT_0147.LAB	6/9/2021	9:31:02 AM	194.80	3.52	0.01	214.39	214.40	194.81	3.52	198.33	-0.04
PRE_ACE_DIRECT_0148.LAB	6/9/2021	9:31:09 AM	193.33	3.46	0.02	213.08	213.12	193.37	3.46	196.84	-0.05
PRE_ACE_DIRECT_0149.LAB	6/9/2021	9:31:17 AM	193.01	3.37	0.00	212.70	212.71	193.02	3.37	196.39	-0.05
PRE_ACE_DIRECT_0150.LAB	6/9/2021	9:31:24 AM	194.84	3.29	0.01	212.02	212.04	194.86	3.29	198.15	-0.05
PRE_ACE_DIRECT_0151.LAB	6/9/2021	9:31:32 AM	195.27	3.29	0.00	211.00	211.01	195.27	3.29	198.56	-0.05
PRE_ACE_DIRECT_0152.LAB	6/9/2021	9:31:39 AM	194.16	3.09	0.02	210.92	210.97	194.21	3.09	197.30	-0.05
PRE_ACE_DIRECT_0153.LAB	6/9/2021	9:31:47 AM	195.42	3.16	-0.01	211.62	211.60	195.41	3.16	198.57	-0.04
PRE_ACE_DIRECT_0154.LAB	6/9/2021	9:31:54 AM	196.03	3.01	0.01	210.93	210.94	196.04	3.01	199.05	-0.05
PRE_ACE_DIRECT_0155.LAB	6/9/2021	9:32:02 AM	196.55	2.97	0.02	211.30	211.33	196.58	2.97	199.56	-0.05
PRE_ACE_DIRECT_0156.LAB	6/9/2021	9:32:09 AM	196.37	3.01	0.03	212.96	213.01	196.42	3.01	199.43	-0.05
PRE_ACE_DIRECT_0157.LAB	6/9/2021	9:32:17 AM	197.01	2.98	0.01	211.22	211.23	197.02	2.98	200.00	-0.05
PRE_ACE_DIRECT_0158.LAB	6/9/2021	9:32:24 AM	197.93	3.00	0.00	213.16	213.16	197.93	3.00	200.93	-0.05
PRE_ACE_DIRECT_0159.LAB	6/9/2021	9:32:32 AM	199.17	2.99	-0.01	213.47	213.45	199.15	2.99	202.13	-0.06
PRE_ACE_DIRECT_0160.LAB	6/9/2021	9:32:39 AM	200.03	2.84	-0.01	216.48	216.47	200.02	2.84	202.86	-0.05
PRE_ACE_DIRECT_0161.LAB	6/9/2021	9:33:32 AM	188.33	2.72	0.01	202.98	203.01	188.35	2.72	191.07	-0.06
PRE_ACE_DIRECT_0162.LAB	6/9/2021	9:33:40 AM	80.11	1.63	0.01	85.70	85.72	80.12	1.63	81.75	-0.06
PRE_ACE_DIRECT_0163.LAB	6/9/2021	9:33:47 AM	96.54	2.06	0.01	104.84	104.85	96.55	2.06	98.61	-0.06
PRE_ACE_DIRECT_0164.LAB	6/9/2021	9:33:55 AM	97.52	2.00	0.00	105.32	105.33	97.53	2.00	99.53	-0.06
PRE_ACE_DIRECT_0165.LAB	6/9/2021	9:34:02 AM	98.21	2.02	0.01	106.17	106.19	98.22	2.02	100.24	-0.06
PRE_ACE_DIRECT_0166.LAB	6/9/2021	9:34:10 AM	98.53	2.15	0.00	106.94	106.94	98.52	2.15	100.68	-0.06
PRE_ACE_DIRECT_0167.LAB	6/9/2021	9:34:17 AM	97.52	2.00	0.01	106.17	106.18	97.52	2.00	99.52	-0.06
PRE_ACE_DIRECT_0168.LAB	6/9/2021	9:34:25 AM	97.42	2.04	-0.01	106.28	106.27	97.41	2.04	99.45	-0.06
PRE_ACE_DIRECT_0169.LAB	6/9/2021	9:34:32 AM	97.46	2.01	0.00	106.07	106.07	97.47	2.01	99.48	-0.06
PRE_ACE_DIRECT_0170.LAB	6/9/2021	9:34:40 AM	115.82	6.78	0.00	123.81	123.81	115.82	6.78	122.60	-0.05
PRE_ACE_DIRECT_0171.LAB	6/9/2021	9:34:47 AM	18.65	97.36	0.00	20.50	20.50	18.65	97.36	116.01	5.14
PRE_ACE_DIRECT_0172.LAB	6/9/2021	9:34:55 AM	1.10	100.53	-0.01	0.62	0.62	1.10	100.52	101.61	7.41
PRE_ACE_DIRECT_0173.LAB	6/9/2021	9:35:02 AM	0.96	101.67	0.01	0.49	0.49	0.96	101.68	102.64	7.40
PRE_ACE_DIRECT_0174.LAB	6/9/2021	9:35:10 AM	0.14	101.08	0.01	-0.32	-0.32	0.14	101.09	101.23	7.39
PRE_ACE_DIRECT_0175.LAB	6/9/2021	9:35:17 AM	0.68	101.40	0.01	-0.43	-0.43	0.68	101.41	102.09	7.39
PRE_ACE_DIRECT_0176.LAB	6/9/2021	9:35:25 AM	0.03	101.89	0.01	-0.60	-0.60	0.03	101.90	101.92	7.40
PRE_ACE_DIRECT_0177.LAB	6/9/2021	9:35:32 AM	0.49	84.69	0.00	-0.04	-0.04	0.49	84.69	85.18	7.41
PRE_ACE_DIRECT_0178.LAB	6/9/2021	9:35:40 AM	0.70	43.34	0.00	-0.01	-0.01	0.70	43.34	44.04	3.13
PRE_ACE_DIRECT_0179.LAB	6/9/2021	9:35:47 AM	0.03	49.21	-0.01	0.31	0.31	0.03	49.21	49.24	3.56
PRE_ACE_DIRECT_0180.LAB	6/9/2021	9:35:55 AM	0.23	49.54	0.01	0.01	0.01	0.23	49.54	49.77	3.62
PRE_ACE_DIRECT_0181.LAB	6/9/2021	9:36:02 AM	0.21	49.46	0.00	0.34	0.34	0.21	49.46	49.67	3.63
PRE_ACE_DIRECT_0182.LAB	6/9/2021	9:36:10 AM	-0.11	49.58	-0.02	-0.05	-0.05	-0.11	49.57	49.46	3.62
PRE_ACE_DIRECT_0183.LAB	6/9/2021	9:36:17 AM	-0.25	49.37	0.02	0.08	0.08	-0.25	49.38	49.13	3.62
PRE_ACE_DIRECT_0184.LAB	6/9/2021	9:36:25 AM	0.13	49.59	-0.01	0.11	0.11	0.13	49.58	49.71	3.63
PRE_ACE_DIRECT_0185.LAB	6/9/2021	9:36:32 AM	0.57	20.99	-0.01	-0.28	-0.28	0.57	20.99	21.56	3.63
PRE_ACE_DIRECT_0186.LAB	6/9/2021	9:36:40 AM	0.72	0.05	0.01	0.02	0.02	0.72	0.05	0.77	0.05
PRE_ACE_DIRECT_0187.LAB	6/9/2021	9:36:47 AM	0.49	0.02	0.00	0.23	0.23	0.49	0.02	0.51	-0.05
PRE_ACE_DIRECT_0188.LAB	6/9/2021	9:36:55 AM	0.33	0.22	-0.02	-0.51	-0.51	0.33	0.22	0.55	-0.06
PRE_ACE_DIRECT_0189.LAB	6/9/2021	9:37:02 AM	0.84	0.09	-0.03	-0.30	-0.30	0.84	0.09	0.93	-0.06

Spectrum	Date	Time	NO (350,300	NO2 (150) 19	H2O% (40) 1	CO (500) 191	CO ppm Dry	NO Dry	NO2 Dry	NOx Dry	O2 Dry
MDC_0190.LAB	6/9/2021	9:53:00 AM	0.39	0.10	0.02	0.29	0.29	0.39	0.10	0.49	-0.05
MDC_0191.LAB	6/9/2021	9:54:01 AM	0.15	-0.01	0.02	-0.13	-0.13	0.15	-0.01	0.14	-0.06
MDC_0192.LAB	6/9/2021	9:55:01 AM	0.25	0.03	0.02	-0.24	-0.24	0.25	0.03	0.28	-0.05

MDC_0193.LAB	6/9/2021	9:56:01 AM	0.34	-0.05	0.01	-0.20	-0.20	0.34	-0.05	0.29	-0.06
MDC_0194.LAB	6/9/2021	9:57:01 AM	0.08	0.02	0.01	-0.21	-0.21	0.08	0.02	0.09	-0.06
MDC_0195.LAB	6/9/2021	9:58:01 AM	0.16	-0.03	0.00	-0.16	-0.16	0.16	-0.03	0.13	-0.06
MDC_0196.LAB	6/9/2021	9:59:01 AM	0.23	0.04	0.00	-0.07	-0.07	0.23	0.04	0.27	-0.06
MDC_0197.LAB	6/9/2021	10:00:01 AM	0.15	0.00	0.00	-0.33	-0.33	0.15	0.00	0.15	-0.06
MDC_0198.LAB	6/9/2021	10:01:01 AM	0.50	0.00	0.00	0.03	0.03	0.50	0.00	0.50	-0.06

Spectrum	Date	Time	NO (350,300(	NO2 (150) 19	H2O% (40) 1(	CO (500) 191	CO ppm Dry	NO Dry	NO2 Dry	NOx Dry	O2 Dry
PRE_SB_0199.LAB	6/9/2021	10:02:17 AM	0.56	-0.05	0.00	-0.13	-0.13	0.56	-0.05	0.50	-0.06
PRE_SB_0200.LAB	6/9/2021	10:02:25 AM	1.21	-0.12	-0.01	-0.76	-0.76	1.21	-0.12	1.09	-0.06
PRE_SB_0201.LAB	6/9/2021	10:02:32 AM	0.32	-0.01	0.01	-0.28	-0.28	0.32	-0.01	0.32	-0.06
PRE_SB_0202.LAB	6/9/2021	10:02:40 AM	-0.35	-0.05	0.00	-0.49	-0.49	-0.35	-0.05	-0.41	-0.06
PRE_SB_0203.LAB	6/9/2021	10:02:47 AM	0.58	-0.07	0.01	0.55	0.55	0.58	-0.07	0.51	-0.06
PRE_SB_0204.LAB	6/9/2021	10:02:55 AM	1.11	-0.01	0.02	-0.72	-0.72	1.11	-0.01	1.10	-0.06
PRE_SB_0205.LAB	6/9/2021	10:03:02 AM	-0.05	0.14	0.00	-0.27	-0.27	-0.05	0.14	0.09	-0.07
PRE_SB_0206.LAB	6/9/2021	10:03:10 AM	0.17	0.09	0.03	0.51	0.51	0.17	0.09	0.27	-0.06
PRE_SB_0207.LAB	6/9/2021	10:03:18 AM	0.00	-0.18	0.01	0.30	0.30	0.00	-0.18	-0.18	-0.06
PRE_SB_0208.LAB	6/9/2021	10:03:25 AM	0.44	0.03	-0.02	0.03	0.03	0.44	0.03	0.47	-0.06
PRE_SB_0209.LAB	6/9/2021	10:03:32 AM	-0.57	0.05	0.02	-0.12	-0.12	-0.57	0.05	-0.52	-0.07
PRE_SB_0210.LAB	6/9/2021	10:03:40 AM	0.54	0.16	0.03	0.19	0.19	0.54	0.16	0.70	-0.06
PRE_SB_0211.LAB	6/9/2021	10:03:47 AM	0.04	0.04	0.00	-0.03	-0.03	0.04	0.04	0.09	-0.06
PRE_SB_0212.LAB	6/9/2021	10:03:55 AM	0.47	-0.02	0.01	-0.28	-0.28	0.47	-0.02	0.45	-0.06
PRE_SB_0213.LAB	6/9/2021	10:04:25 AM	0.05	0.16	0.00	-0.10	-0.10	0.05	0.16	0.21	-0.07
PRE_SB_0214.LAB	6/9/2021	10:04:32 AM	0.36	0.02	0.01	-0.41	-0.41	0.36	0.02	0.37	-0.06
PRE_SB_0215.LAB	6/9/2021	10:04:40 AM	0.15	-0.03	0.00	0.84	0.84	0.15	-0.03	0.12	-0.06
PRE_SB_0216.LAB	6/9/2021	10:04:47 AM	0.29	0.18	-0.01	-0.31	-0.31	0.29	0.18	0.47	-0.06
PRE_SB_0217.LAB	6/9/2021	10:04:55 AM	2.22	1.47	0.02	2.36	2.36	2.22	1.47	3.69	-0.05
PRE_SB_0218.LAB	6/9/2021	10:05:02 AM	105.49	47.23	0.00	164.76	164.76	105.49	47.24	152.73	1.47
PRE_SB_0219.LAB	6/9/2021	10:05:10 AM	186.54	17.30	-0.01	223.49	223.46	186.51	17.30	203.81	0.17
PRE_SB_0220.LAB	6/9/2021	10:05:17 AM	199.08	2.64	0.01	214.98	215.00	199.10	2.64	201.74	-0.02
PRE_SB_0221.LAB	6/9/2021	10:05:25 AM	200.58	1.89	0.02	219.12	219.15	200.61	1.89	202.50	-0.04
PRE_SB_0222.LAB	6/9/2021	10:05:32 AM	203.22	1.59	0.02	221.31	221.36	203.27	1.59	204.86	-0.04
PRE_SB_0223.LAB	6/9/2021	10:05:40 AM	203.90	1.38	0.00	220.55	220.56	203.91	1.38	205.28	-0.04
PRE_SB_0224.LAB	6/9/2021	10:05:47 AM	203.37	1.28	-0.01	221.85	221.82	203.34	1.28	204.62	-0.04
PRE_SB_0225.LAB	6/9/2021	10:05:55 AM	203.83	1.29	0.02	220.75	220.80	203.88	1.29	205.17	-0.05
PRE_SB_0226.LAB	6/9/2021	10:06:03 AM	203.91	1.24	0.01	221.03	221.04	203.92	1.24	205.16	-0.04
PRE_SB_0227.LAB	6/9/2021	10:06:10 AM	204.48	1.07	0.02	221.19	221.24	204.53	1.07	205.60	-0.06
PRE_SB_0228.LAB	6/9/2021	10:06:40 AM	203.98	1.14	0.02	221.28	221.32	204.02	1.14	205.15	-0.05
PRE_SB_0229.LAB	6/9/2021	10:06:48 AM	204.65	1.03	-0.03	220.04	219.99	204.60	1.03	205.63	-0.05
PRE_SB_0230.LAB	6/9/2021	10:06:55 AM	202.22	1.04	0.00	220.36	220.36	202.23	1.04	203.26	-0.05
PRE_SB_0231.LAB	6/9/2021	10:07:02 AM	97.31	0.73	-0.01	100.54	100.53	97.30	0.73	98.03	-0.06
PRE_SB_0232.LAB	6/9/2021	10:07:10 AM	4.20	0.18	0.03	4.43	4.43	4.20	0.18	4.38	-0.06
PRE_SB_0233.LAB	6/9/2021	10:07:18 AM	1.31	0.04	0.02	0.74	0.74	1.31	0.04	1.36	-0.06
PRE_SB_0234.LAB	6/9/2021	10:07:25 AM	1.54	0.00	-0.01	0.17	0.17	1.54	0.00	1.54	-0.06
PRE_SB_0235.LAB	6/9/2021	10:07:33 AM	-0.34	0.10	0.02	-0.37	-0.37	-0.34	0.10	-0.24	-0.06
PRE_SB_0236.LAB	6/9/2021	10:07:40 AM	0.48	0.16	0.01	-0.10	-0.10	0.48	0.16	0.64	-0.06
PRE_SB_0237.LAB	6/9/2021	10:07:48 AM	0.63	0.05	-0.01	0.45	0.45	0.63	0.05	0.68	-0.07
PRE_SB_0238.LAB	6/9/2021	10:07:55 AM	0.96	0.04	0.00	0.31	0.31	0.96	0.04	1.00	-0.06
PRE_SB_0239.LAB	6/9/2021	10:08:03 AM	0.23	-0.11	0.03	-0.92	-0.92	0.23	-0.11	0.11	-0.06
PRE_SB_0240.LAB	6/9/2021	10:09:11 AM	-0.43	0.02	0.01	-0.03	-0.03	-0.43	0.02	-0.41	-0.06
PRE_SB_0241.LAB	6/9/2021	10:09:18 AM	0.27	0.10	-0.01	1.06	1.06	0.27	0.10	0.37	-0.06
PRE_SB_0242.LAB	6/9/2021	10:09:25 AM	1.30	0.11	-0.01	1.78	1.78	1.29	0.11	1.41	-0.06
PRE_SB_0243.LAB	6/9/2021	10:09:33 AM	40.96	56.81	0.00	44.14	44.13	40.96	56.81	97.77	0.34
PRE_SB_0244.LAB	6/9/2021	10:09:40 AM	12.71	90.67	0.01	2.35	2.35	12.71	90.68	103.39	8.56
PRE_SB_0245.LAB	6/9/2021	10:09:48 AM	9.78	96.22	0.00	1.70	1.70	9.78	96.22	106.00	8.74
PRE_SB_0246.LAB	6/9/2021	10:09:55 AM	8.55	98.10	0.00	1.15	1.15	8.55	98.10	106.65	8.73
PRE_SB_0247.LAB	6/9/2021	10:10:03 AM	8.45	99.59	-0.02	0.37	0.37	8.45	99.57	108.01	8.73
PRE_SB_0248.LAB	6/9/2021	10:10:10 AM	7.26	101.14	0.02	0.81	0.81	7.26	101.16	108.42	8.73
PRE_SB_0249.LAB	6/9/2021	10:10:18 AM	7.78	102.01	-0.01	0.19	0.19	7.78	102.00	109.78	8.73
PRE_SB_0250.LAB	6/9/2021	10:10:26 AM	6.71	103.22	0.00	0.31	0.31	6.71	103.22	109.93	8.74
PRE_SB_0251.LAB	6/9/2021	10:10:33 AM	6.10	104.00	0.03	0.12	0.12	6.10	104.03	110.13	8.74
PRE_SB_0252.LAB	6/9/2021	10:10:40 AM	4.49	66.17	0.02	0.17	0.17	4.49	66.18	70.68	8.75
PRE_SB_0253.LAB	6/9/2021	10:10:48 AM	5.43	25.77	0.03	9.76	9.76	5.43	25.78	31.21	1.90
PRE_SB_0254.LAB	6/9/2021	10:10:56 AM	58.34	24.08	0.01	77.89	77.89	58.34	24.08	82.43	1.67
PRE_SB_0255.LAB	6/9/2021	10:11:03 AM	89.31	9.39	-0.01	105.05	105.05	89.30	9.39	98.69	0.14
PRE_SB_0256.LAB	6/9/2021	10:11:10 AM	92.61	6.12	0.01	106.38	106.40	92.62	6.12	98.75	-0.01

PRE_SB_0257.LAB	6/9/2021	10:11:18 AM	94.35	3.34	-0.02	105.51	105.50	94.33	3.34	97.67	-0.03
PRE_SB_0258.LAB	6/9/2021	10:11:25 AM	96.33	2.55	0.03	106.48	106.51	96.36	2.55	98.91	-0.03
PRE_SB_0259.LAB	6/9/2021	10:11:33 AM	97.20	2.22	-0.01	106.10	106.09	97.19	2.22	99.41	-0.04
PRE_SB_0260.LAB	6/9/2021	10:11:40 AM	98.24	1.95	0.01	107.37	107.39	98.25	1.95	100.20	-0.04
PRE_SB_0261.LAB	6/9/2021	10:11:48 AM	98.09	1.83	0.03	107.85	107.87	98.11	1.83	99.95	-0.04
PRE_SB_0262.LAB	6/9/2021	10:11:56 AM	99.00	1.57	0.04	108.32	108.36	99.04	1.57	100.60	-0.05
PRE_SB_0263.LAB	6/9/2021	10:12:03 AM	98.93	1.66	0.00	106.91	106.91	98.93	1.66	100.59	-0.05
PRE_SB_0264.LAB	6/9/2021	10:12:10 AM	97.68	6.66	0.00	105.20	105.20	97.68	6.66	104.34	-0.05
PRE_SB_0265.LAB	6/9/2021	10:12:18 AM	12.15	39.37	-0.01	9.97	9.97	12.15	39.37	51.52	2.00
PRE_SB_0266.LAB	6/9/2021	10:12:25 AM	3.81	43.73	-0.01	0.91	0.91	3.81	43.73	47.53	3.59
PRE_SB_0267.LAB	6/9/2021	10:12:33 AM	3.34	44.12	0.03	0.21	0.21	3.34	44.13	47.47	3.62
PRE_SB_0268.LAB	6/9/2021	10:12:40 AM	2.62	44.37	0.01	0.44	0.44	2.62	44.38	47.00	3.63
PRE_SB_0269.LAB	6/9/2021	10:12:48 AM	3.39	44.88	0.01	0.78	0.78	3.39	44.89	48.28	3.62
PRE_SB_0270.LAB	6/9/2021	10:12:56 AM	2.72	45.53	0.01	-0.06	-0.06	2.72	45.53	48.25	3.63
PRE_SB_0271.LAB	6/9/2021	10:13:03 AM	1.84	46.11	-0.01	0.11	0.11	1.84	46.11	47.94	3.64
PRE_SB_0272.LAB	6/9/2021	10:13:11 AM	2.81	45.97	0.02	0.15	0.15	2.81	45.98	48.80	3.63
PRE_SB_0273.LAB	6/9/2021	10:13:18 AM	2.95	45.88	0.02	0.10	0.10	2.95	45.89	48.84	3.64
PRE_SB_0274.LAB	6/9/2021	10:13:26 AM	2.78	45.65	0.02	0.39	0.39	2.78	45.66	48.44	3.64
PRE_SB_0275.LAB	6/9/2021	10:13:33 AM	2.60	44.53	0.00	0.13	0.13	2.60	44.53	47.13	3.64
PRE_SB_0276.LAB	6/9/2021	10:13:41 AM	3.35	43.99	0.02	0.47	0.47	3.35	44.00	47.35	3.65

Spectrum	Date	Time	NO (350,300	NO2 (150) 19	H2O% (40) 1	CO (500) 191	CO ppm Dry	NO Dry	NO2 Dry	NOx Dry	O2 Dry
STRAT_Unit 5_0277.LAB	6/9/2021	2:53:30 PM	9.28	0.22	4.83	2.66	2.80	9.75	0.23	9.99	16.50
STRAT_Unit 5_0278.LAB	6/9/2021	2:53:38 PM	9.10	0.14	4.86	2.36	2.48	9.56	0.14	9.70	16.50
STRAT_Unit 5_0279.LAB	6/9/2021	2:53:46 PM	9.07	0.46	4.89	2.62	2.75	9.53	0.48	10.01	16.50
STRAT_Unit 5_0280.LAB	6/9/2021	2:53:53 PM	8.83	0.38	4.89	1.73	1.82	9.29	0.40	9.69	16.48
STRAT_Unit 5_0281.LAB	6/9/2021	2:54:00 PM	9.36	0.32	4.88	1.69	1.77	9.84	0.34	10.18	16.48
STRAT_Unit 5_0282.LAB	6/9/2021	2:54:08 PM	9.41	0.40	4.83	2.01	2.11	9.89	0.42	10.31	16.49
STRAT_Unit 5_0283.LAB	6/9/2021	2:54:15 PM	9.70	0.36	4.87	1.84	1.93	10.20	0.38	10.57	16.48
STRAT_Unit 5_0284.LAB	6/9/2021	2:54:23 PM	9.35	0.51	4.88	2.14	2.25	9.83	0.54	10.37	16.47
STRAT_Unit 5_0285.LAB	6/9/2021	2:54:30 PM	9.14	0.42	4.88	2.54	2.67	9.61	0.45	10.05	16.47
STRAT_Unit 5_0286.LAB	6/9/2021	2:54:38 PM	9.67	0.48	4.91	2.19	2.30	10.17	0.50	10.68	16.48
STRAT_Unit 5_0287.LAB	6/9/2021	2:54:45 PM	9.13	0.25	4.91	2.26	2.38	9.60	0.26	9.86	16.48
STRAT_Unit 5_0288.LAB	6/9/2021	2:54:53 PM	9.63	0.53	4.88	1.65	1.74	10.13	0.56	10.69	16.48
STRAT_Unit 5_0289.LAB	6/9/2021	2:55:01 PM	9.72	0.20	4.87	1.99	2.09	10.22	0.21	10.43	16.48
STRAT_Unit 5_0290.LAB	6/9/2021	2:55:08 PM	9.21	0.45	4.89	1.95	2.05	9.68	0.47	10.15	16.48
STRAT_Unit 5_0291.LAB	6/9/2021	2:55:15 PM	9.05	0.53	4.89	2.06	2.17	9.51	0.56	10.07	16.48
STRAT_Unit 5_0292.LAB	6/9/2021	2:55:23 PM	9.26	0.49	4.84	1.87	1.97	9.73	0.52	10.25	16.48
STRAT_Unit 5_0293.LAB	6/9/2021	2:55:30 PM	8.88	0.58	4.93	2.52	2.65	9.33	0.61	9.95	16.48
STRAT_Unit 5_0294.LAB	6/9/2021	2:55:38 PM	9.18	0.57	4.91	2.43	2.56	9.66	0.59	10.25	16.48
STRAT_Unit 5_0295.LAB	6/9/2021	2:55:46 PM	8.53	0.59	4.86	1.72	1.81	8.97	0.62	9.59	16.47
STRAT_Unit 5_0296.LAB	6/9/2021	2:55:53 PM	9.11	0.72	4.86	2.18	2.29	9.57	0.75	10.32	16.48
STRAT_Unit 5_0297.LAB	6/9/2021	2:56:01 PM	9.74	0.48	4.85	2.07	2.17	10.23	0.51	10.74	16.48
STRAT_Unit 5_0298.LAB	6/9/2021	2:56:08 PM	9.50	0.54	4.85	1.93	2.03	9.98	0.56	10.55	16.48
STRAT_Unit 5_0299.LAB	6/9/2021	2:56:16 PM	9.22	0.45	4.86	1.26	1.32	9.69	0.47	10.16	16.48
STRAT_Unit 5_0300.LAB	6/9/2021	2:56:23 PM	8.92	0.46	4.85	1.99	2.09	9.38	0.48	9.86	16.48
STRAT_Unit 5_0301.LAB	6/9/2021	2:56:31 PM	8.85	0.43	4.86	1.34	1.41	9.31	0.45	9.76	16.47
STRAT_Unit 5_0302.LAB	6/9/2021	2:56:38 PM	9.52	0.71	4.83	2.27	2.39	10.00	0.74	10.75	16.47
STRAT_Unit 5_0303.LAB	6/9/2021	2:56:46 PM	8.76	0.61	4.86	2.29	2.40	9.21	0.65	9.85	16.48
STRAT_Unit 5_0304.LAB	6/9/2021	2:56:53 PM	9.70	0.60	4.90	3.00	3.16	10.20	0.63	10.83	16.48
STRAT_Unit 5_0305.LAB	6/9/2021	2:57:01 PM	9.95	0.31	4.88	3.04	3.20	10.46	0.33	10.79	16.47
STRAT_Unit 5_0306.LAB	6/9/2021	2:57:08 PM	9.75	0.32	4.89	2.81	2.95	10.25	0.34	10.59	16.47
STRAT_Unit 5_0307.LAB	6/9/2021	2:57:16 PM	9.06	0.74	4.88	1.96	2.06	9.52	0.78	10.30	16.47
STRAT_Unit 5_0308.LAB	6/9/2021	2:57:23 PM	9.15	0.49	4.87	1.16	1.22	9.62	0.52	10.13	16.48
STRAT_Unit 5_0309.LAB	6/9/2021	2:57:31 PM	8.96	0.65	4.86	1.81	1.90	9.42	0.68	10.10	16.48
STRAT_Unit 5_0310.LAB	6/9/2021	2:57:38 PM	9.22	0.86	4.80	1.69	1.77	9.68	0.91	10.59	16.48
STRAT_Unit 5_0311.LAB	6/9/2021	2:57:46 PM	9.19	0.77	4.81	2.29	2.40	9.65	0.80	10.46	16.48
STRAT_Unit 5_0312.LAB	6/9/2021	2:57:53 PM	9.37	0.52	4.87	1.49	1.56	9.85	0.54	10.40	16.47
STRAT_Unit 5_0313.LAB	6/9/2021	2:58:01 PM	9.18	0.52	4.87	1.34	1.40	9.65	0.55	10.20	16.47
STRAT_Unit 5_0314.LAB	6/9/2021	2:58:08 PM	9.06	0.70	4.90	2.22	2.33	9.53	0.74	10.26	16.46
STRAT_Unit 5_0315.LAB	6/9/2021	2:58:16 PM	8.90	0.62	4.87	2.13	2.24	9.36	0.65	10.01	16.46
STRAT_Unit 5_0316.LAB	6/9/2021	2:58:24 PM	8.92	0.71	4.87	2.01	2.11	9.38	0.75	10.13	16.48
STRAT_Unit 5_0317.LAB	6/9/2021	2:58:31 PM	9.37	0.78	4.89	1.28	1.34	9.85	0.82	10.67	16.46
STRAT_Unit 5_0318.LAB	6/9/2021	2:58:39 PM	8.89	0.62	4.85	1.77	1.86	9.35	0.65	9.99	16.46
STRAT_Unit 5_0319.LAB	6/9/2021	2:58:46 PM	9.32	0.93	4.94	2.61	2.74	9.81	0.98	10.78	16.47
STRAT_Unit 5_0320.LAB	6/9/2021	2:58:54 PM	9.61	0.72	4.92	2.33	2.45	10.11	0.76	10.87	16.47

STRAT_Unit 5_0321.LAB	6/9/2021	2:59:01 PM	8.46	0.80	4.87	2.24	2.36	8.89	0.84	9.73	16.47
STRAT_Unit 5_0322.LAB	6/9/2021	2:59:08 PM	9.54	0.72	4.87	2.38	2.51	10.03	0.76	10.79	16.46
STRAT_Unit 5_0323.LAB	6/9/2021	2:59:16 PM	8.36	0.74	4.84	1.79	1.88	8.78	0.77	9.56	16.48
STRAT_Unit 5_0324.LAB	6/9/2021	2:59:24 PM	8.99	0.62	4.88	1.77	1.86	9.45	0.65	10.10	16.48
STRAT_Unit 5_0325.LAB	6/9/2021	2:59:31 PM	8.90	0.58	4.87	1.47	1.55	9.36	0.60	9.96	16.49
STRAT_Unit 5_0326.LAB	6/9/2021	2:59:39 PM	8.99	0.70	4.84	1.26	1.32	9.45	0.73	10.19	16.46
STRAT_Unit 5_0327.LAB	6/9/2021	2:59:46 PM	8.06	0.66	4.83	1.28	1.34	8.46	0.69	9.16	16.48
STRAT_Unit 5_0328.LAB	6/9/2021	2:59:53 PM	8.89	0.58	4.89	1.52	1.60	9.35	0.60	9.95	16.48
STRAT_Unit 5_0329.LAB	6/9/2021	3:00:01 PM	8.84	0.61	4.87	1.29	1.36	9.29	0.64	9.93	16.48
STRAT_Unit 5_0330.LAB	6/9/2021	3:00:09 PM	8.26	0.87	4.87	1.99	2.09	8.68	0.92	9.60	16.47
STRAT_Unit 5_0331.LAB	6/9/2021	3:00:16 PM	8.87	0.71	4.88	1.57	1.65	9.33	0.75	10.08	16.48
STRAT_Unit 5_0332.LAB	6/9/2021	3:00:23 PM	8.81	0.73	4.85	1.31	1.38	9.26	0.76	10.02	16.48
STRAT_Unit 5_0333.LAB	6/9/2021	3:00:31 PM	8.18	0.75	4.86	1.58	1.66	8.60	0.79	9.40	16.47
STRAT_Unit 5_0334.LAB	6/9/2021	3:00:38 PM	8.87	0.57	4.87	1.95	2.05	9.32	0.60	9.92	16.49
STRAT_Unit 5_0335.LAB	6/9/2021	3:00:46 PM	8.86	0.63	4.89	1.52	1.60	9.32	0.66	9.98	16.47
STRAT_Unit 5_0336.LAB	6/9/2021	3:00:53 PM	8.94	0.70	4.89	1.75	1.84	9.40	0.74	10.13	16.45
STRAT_Unit 5_0337.LAB	6/9/2021	3:01:01 PM	8.11	0.62	4.86	2.02	2.12	8.53	0.65	9.18	16.45

Spectrum	Date	Time	NO (350,300(	NO2 (150) 19	H2O% (40) 1!	CO (500) 191	CO ppm Dry	NO Dry	NO2 Dry	NOx Dry	O2 Dry
RUN_1_Unit 5_0338.LAB	6/9/2021	3:01:42 PM	8.52	0.71	4.86	1.81	1.90	8.96	0.75	9.71	16.46
RUN_1_Unit 5_0339.LAB	6/9/2021	3:01:50 PM	8.48	0.84	4.86	2.40	2.52	8.91	0.88	9.79	16.48
RUN_1_Unit 5_0340.LAB	6/9/2021	3:01:57 PM	8.70	0.76	4.88	1.74	1.83	9.14	0.80	9.94	16.47
RUN_1_Unit 5_0341.LAB	6/9/2021	3:02:05 PM	8.11	0.70	4.92	1.92	2.02	8.53	0.74	9.26	16.48
RUN_1_Unit 5_0342.LAB	6/9/2021	3:02:12 PM	8.68	0.91	4.85	1.16	1.22	9.12	0.95	10.08	16.48
RUN_1_Unit 5_0343.LAB	6/9/2021	3:02:20 PM	8.17	0.69	4.91	1.03	1.08	8.60	0.72	9.32	16.47
RUN_1_Unit 5_0344.LAB	6/9/2021	3:02:27 PM	8.12	0.69	4.88	1.08	1.13	8.54	0.72	9.26	16.47
RUN_1_Unit 5_0345.LAB	6/9/2021	3:02:35 PM	8.41	0.67	4.87	1.45	1.52	8.84	0.70	9.54	16.47
RUN_1_Unit 5_0346.LAB	6/9/2021	3:02:43 PM	8.87	0.83	4.88	1.99	2.09	9.33	0.87	10.20	16.48
RUN_1_Unit 5_0347.LAB	6/9/2021	3:02:50 PM	8.93	0.82	4.88	1.14	1.20	9.39	0.86	10.25	16.45
RUN_1_Unit 5_0348.LAB	6/9/2021	3:02:58 PM	7.58	0.90	4.88	1.61	1.69	7.96	0.94	8.91	16.46
RUN_1_Unit 5_0349.LAB	6/9/2021	3:03:05 PM	9.19	0.88	4.91	1.42	1.50	9.67	0.92	10.59	16.46
RUN_1_Unit 5_0350.LAB	6/9/2021	3:03:12 PM	8.22	0.84	4.91	2.28	2.40	8.65	0.88	9.53	16.46
RUN_1_Unit 5_0351.LAB	6/9/2021	3:03:20 PM	8.26	0.86	4.87	1.75	1.84	8.69	0.91	9.59	16.47
RUN_1_Unit 5_0352.LAB	6/9/2021	3:03:27 PM	8.49	1.02	4.86	1.89	1.99	8.93	1.07	9.99	16.47
RUN_1_Unit 5_0353.LAB	6/9/2021	3:03:35 PM	8.93	0.93	4.88	1.38	1.45	9.38	0.98	10.36	16.46
RUN_1_Unit 5_0354.LAB	6/9/2021	3:03:43 PM	7.95	0.85	4.88	2.48	2.61	8.36	0.89	9.25	16.47
RUN_1_Unit 5_0355.LAB	6/9/2021	3:03:50 PM	8.12	0.70	4.87	2.14	2.24	8.53	0.73	9.26	16.47
RUN_1_Unit 5_0356.LAB	6/9/2021	3:03:57 PM	8.66	0.74	4.90	1.51	1.59	9.11	0.77	9.89	16.46
RUN_1_Unit 5_0357.LAB	6/9/2021	3:04:05 PM	8.57	0.76	4.86	0.94	0.99	9.00	0.80	9.80	16.46
RUN_1_Unit 5_0358.LAB	6/9/2021	3:04:12 PM	8.26	0.94	4.93	1.94	2.04	8.69	0.99	9.68	16.47
RUN_1_Unit 5_0359.LAB	6/9/2021	3:04:20 PM	8.82	1.03	4.88	1.73	1.81	9.27	1.08	10.35	16.47
RUN_1_Unit 5_0360.LAB	6/9/2021	3:04:27 PM	8.69	0.82	4.93	2.47	2.60	9.14	0.86	10.00	16.46
RUN_1_Unit 5_0361.LAB	6/9/2021	3:04:35 PM	8.41	0.88	4.90	1.25	1.31	8.85	0.92	9.77	16.47
RUN_1_Unit 5_0362.LAB	6/9/2021	3:04:42 PM	8.65	0.78	4.92	2.25	2.37	9.09	0.82	9.91	16.46
RUN_1_Unit 5_0363.LAB	6/9/2021	3:04:50 PM	7.83	0.84	4.92	1.34	1.41	8.24	0.89	9.12	16.47
RUN_1_Unit 5_0364.LAB	6/9/2021	3:04:58 PM	8.59	0.83	4.89	1.40	1.47	9.03	0.87	9.91	16.47
RUN_1_Unit 5_0365.LAB	6/9/2021	3:05:05 PM	8.59	0.96	4.92	2.06	2.16	9.03	1.01	10.05	16.46
RUN_1_Unit 5_0366.LAB	6/9/2021	3:05:13 PM	8.78	0.78	4.92	1.52	1.60	9.23	0.82	10.06	16.46
RUN_1_Unit 5_0367.LAB	6/9/2021	3:05:20 PM	8.52	0.56	4.89	1.37	1.44	8.96	0.59	9.55	16.46
RUN_1_Unit 5_0368.LAB	6/9/2021	3:05:28 PM	8.32	0.68	4.91	1.53	1.61	8.75	0.72	9.46	16.46
RUN_1_Unit 5_0369.LAB	6/9/2021	3:05:35 PM	8.65	0.94	4.86	2.15	2.26	9.09	0.99	10.08	16.46
RUN_1_Unit 5_0370.LAB	6/9/2021	3:05:43 PM	7.92	0.96	4.90	1.61	1.69	8.33	1.01	9.34	16.46
RUN_1_Unit 5_0371.LAB	6/9/2021	3:05:50 PM	8.40	0.78	4.92	2.13	2.24	8.83	0.82	9.65	16.45
RUN_1_Unit 5_0372.LAB	6/9/2021	3:05:58 PM	8.65	0.99	4.89	2.22	2.33	9.10	1.04	10.13	16.46
RUN_1_Unit 5_0373.LAB	6/9/2021	3:06:05 PM	8.72	1.08	4.92	1.68	1.77	9.17	1.13	10.30	16.45
RUN_1_Unit 5_0374.LAB	6/9/2021	3:06:13 PM	8.14	0.95	4.92	1.84	1.94	8.56	1.00	9.56	16.46
RUN_1_Unit 5_0375.LAB	6/9/2021	3:06:20 PM	8.69	0.98	4.92	2.48	2.61	9.14	1.03	10.16	16.47
RUN_1_Unit 5_0376.LAB	6/9/2021	3:06:28 PM	8.41	1.00	4.89	1.67	1.76	8.85	1.05	9.89	16.47
RUN_1_Unit 5_0377.LAB	6/9/2021	3:06:35 PM	8.02	0.89	4.89	1.98	2.08	8.43	0.94	9.37	16.46
RUN_1_Unit 5_0378.LAB	6/9/2021	3:06:43 PM	8.85	1.11	4.94	2.49	2.62	9.31	1.17	10.48	16.46
RUN_1_Unit 5_0379.LAB	6/9/2021	3:06:50 PM	8.49	1.04	4.90	1.38	1.45	8.93	1.09	10.03	16.46
RUN_1_Unit 5_0380.LAB	6/9/2021	3:06:58 PM	8.02	0.94	4.95	1.85	1.95	8.44	0.99	9.43	16.45
RUN_1_Unit 5_0381.LAB	6/9/2021	3:07:06 PM	8.46	0.72	4.91	1.43	1.50	8.90	0.75	9.66	16.45
RUN_1_Unit 5_0382.LAB	6/9/2021	3:07:13 PM	8.40	0.81	4.96	1.86	1.96	8.83	0.85	9.68	16.45
RUN_1_Unit 5_0383.LAB	6/9/2021	3:07:20 PM	7.90	0.90	4.93	1.86	1.96	8.31	0.94	9.25	16.46
RUN_1_Unit 5_0384.LAB	6/9/2021	3:07:28 PM	8.24	0.92	4.92	2.11	2.22	8.66	0.96	9.63	16.45

RUN_1_Unit 5_0385.LAB	6/9/2021	3:07:36 PM	8.51	0.75	4.86	1.47	1.55	8.95	0.79	9.73	16.46
RUN_1_Unit 5_0386.LAB	6/9/2021	3:07:43 PM	7.69	0.79	4.92	2.45	2.58	8.08	0.83	8.91	16.46
RUN_1_Unit 5_0387.LAB	6/9/2021	3:07:50 PM	7.73	1.09	4.94	2.45	2.58	8.13	1.15	9.28	16.46
RUN_1_Unit 5_0388.LAB	6/9/2021	3:07:58 PM	8.54	1.02	4.94	1.82	1.91	8.99	1.07	10.06	16.46
RUN_1_Unit 5_0389.LAB	6/9/2021	3:08:06 PM	8.31	1.02	4.94	1.61	1.69	8.74	1.07	9.82	16.46
RUN_1_Unit 5_0390.LAB	6/9/2021	3:08:13 PM	8.61	0.99	4.92	1.42	1.49	9.05	1.04	10.09	16.45
RUN_1_Unit 5_0391.LAB	6/9/2021	3:08:20 PM	8.32	1.29	4.86	1.84	1.93	8.75	1.36	10.11	16.46
RUN_1_Unit 5_0392.LAB	6/9/2021	3:08:28 PM	8.56	0.94	4.89	2.99	3.15	9.00	0.99	9.98	16.47
RUN_1_Unit 5_0393.LAB	6/9/2021	3:08:36 PM	8.47	1.09	4.91	2.24	2.36	8.90	1.15	10.05	16.45
RUN_1_Unit 5_0394.LAB	6/9/2021	3:08:43 PM	9.09	0.79	4.91	1.84	1.94	9.56	0.83	10.39	16.47
RUN_1_Unit 5_0395.LAB	6/9/2021	3:08:50 PM	8.39	1.05	4.91	1.52	1.60	8.82	1.11	9.93	16.45
RUN_1_Unit 5_0396.LAB	6/9/2021	3:08:58 PM	7.51	1.20	4.95	2.12	2.23	7.90	1.26	9.16	16.46
RUN_1_Unit 5_0397.LAB	6/9/2021	3:09:05 PM	8.63	1.06	4.94	2.63	2.77	9.07	1.12	10.19	16.46
RUN_1_Unit 5_0398.LAB	6/9/2021	3:09:13 PM	8.77	1.02	4.88	1.97	2.07	9.22	1.07	10.29	16.45
RUN_1_Unit 5_0399.LAB	6/9/2021	3:09:20 PM	8.03	0.97	4.99	1.96	2.06	8.45	1.02	9.47	16.46
RUN_1_Unit 5_0400.LAB	6/9/2021	3:09:28 PM	8.45	1.02	4.94	1.89	1.99	8.89	1.08	9.96	16.45
RUN_1_Unit 5_0401.LAB	6/9/2021	3:09:36 PM	8.20	1.08	4.92	2.93	3.08	8.62	1.13	9.76	16.45
RUN_1_Unit 5_0402.LAB	6/9/2021	3:09:43 PM	8.79	1.14	4.92	2.43	2.55	9.25	1.20	10.45	16.47
RUN_1_Unit 5_0403.LAB	6/9/2021	3:09:51 PM	7.96	0.97	4.91	2.39	2.52	8.37	1.02	9.39	16.45
RUN_1_Unit 5_0404.LAB	6/9/2021	3:09:58 PM	8.78	0.93	4.91	2.53	2.67	9.24	0.98	10.22	16.46
RUN_1_Unit 5_0405.LAB	6/9/2021	3:10:05 PM	9.07	1.25	4.95	2.11	2.22	9.54	1.31	10.85	16.48
RUN_1_Unit 5_0406.LAB	6/9/2021	3:10:13 PM	8.51	1.14	4.93	1.83	1.93	8.95	1.20	10.15	16.47
RUN_1_Unit 5_0407.LAB	6/9/2021	3:10:21 PM	8.30	1.28	4.92	2.41	2.53	8.73	1.34	10.07	16.47
RUN_1_Unit 5_0408.LAB	6/9/2021	3:10:28 PM	7.89	1.08	4.92	1.99	2.10	8.30	1.14	9.44	16.48
RUN_1_Unit 5_0409.LAB	6/9/2021	3:10:36 PM	7.99	1.16	4.90	1.15	1.21	8.40	1.22	9.63	16.46
RUN_1_Unit 5_0410.LAB	6/9/2021	3:10:43 PM	8.10	1.23	4.93	2.26	2.38	8.52	1.30	9.81	16.47
RUN_1_Unit 5_0411.LAB	6/9/2021	3:10:51 PM	7.64	1.18	4.94	2.25	2.36	8.04	1.24	9.28	16.46
RUN_1_Unit 5_0412.LAB	6/9/2021	3:10:58 PM	8.56	0.96	4.95	2.07	2.18	9.01	1.01	10.02	16.47
RUN_1_Unit 5_0413.LAB	6/9/2021	3:11:06 PM	8.23	1.29	4.94	2.32	2.44	8.65	1.36	10.01	16.47
RUN_1_Unit 5_0414.LAB	6/9/2021	3:11:13 PM	8.42	1.09	4.93	2.39	2.51	8.86	1.15	10.01	16.46
RUN_1_Unit 5_0415.LAB	6/9/2021	3:11:21 PM	8.66	1.03	4.97	2.22	2.33	9.11	1.09	10.20	16.46
RUN_1_Unit 5_0416.LAB	6/9/2021	3:11:28 PM	8.31	1.08	4.95	3.27	3.44	8.74	1.14	9.88	16.47
RUN_1_Unit 5_0417.LAB	6/9/2021	3:11:36 PM	8.23	1.13	4.96	2.97	3.13	8.66	1.19	9.85	16.47
RUN_1_Unit 5_0418.LAB	6/9/2021	3:11:43 PM	8.50	1.13	4.96	2.25	2.37	8.94	1.19	10.14	16.48
RUN_1_Unit 5_0419.LAB	6/9/2021	3:11:51 PM	7.90	1.23	4.89	2.35	2.47	8.31	1.30	9.60	16.47
RUN_1_Unit 5_0420.LAB	6/9/2021	3:11:58 PM	8.60	1.30	4.91	2.08	2.18	9.04	1.37	10.40	16.47
RUN_1_Unit 5_0421.LAB	6/9/2021	3:12:06 PM	8.15	1.13	4.94	1.93	2.03	8.58	1.19	9.77	16.46
RUN_1_Unit 5_0422.LAB	6/9/2021	3:12:13 PM	8.08	1.27	4.94	1.19	1.25	8.50	1.33	9.83	16.45
RUN_1_Unit 5_0423.LAB	6/9/2021	3:12:21 PM	9.18	1.38	4.89	1.92	2.01	9.65	1.45	11.11	16.46
RUN_1_Unit 5_0424.LAB	6/9/2021	3:12:28 PM	9.08	1.15	4.92	1.67	1.75	9.55	1.21	10.77	16.46
RUN_1_Unit 5_0425.LAB	6/9/2021	3:12:36 PM	8.62	1.11	4.91	2.31	2.43	9.07	1.17	10.24	16.47
RUN_1_Unit 5_0426.LAB	6/9/2021	3:12:43 PM	8.65	1.28	4.95	2.49	2.62	9.10	1.35	10.46	16.47
RUN_1_Unit 5_0427.LAB	6/9/2021	3:12:51 PM	8.14	1.21	4.96	2.11	2.22	8.57	1.27	9.83	16.45
RUN_1_Unit 5_0428.LAB	6/9/2021	3:12:58 PM	8.63	1.22	4.90	2.90	3.05	9.07	1.28	10.35	16.45
RUN_1_Unit 5_0429.LAB	6/9/2021	3:13:06 PM	7.75	1.17	4.93	2.68	2.82	8.15	1.23	9.38	16.47
RUN_1_Unit 5_0430.LAB	6/9/2021	3:13:13 PM	8.34	1.13	4.92	2.19	2.30	8.77	1.19	9.96	16.45
RUN_1_Unit 5_0431.LAB	6/9/2021	3:13:21 PM	7.96	1.18	4.95	2.76	2.90	8.38	1.24	9.62	16.45
RUN_1_Unit 5_0432.LAB	6/9/2021	3:13:28 PM	8.37	1.03	4.97	2.34	2.46	8.81	1.08	9.89	16.47
RUN_1_Unit 5_0433.LAB	6/9/2021	3:13:36 PM	8.10	1.26	4.98	1.92	2.02	8.53	1.32	9.85	16.46
RUN_1_Unit 5_0434.LAB	6/9/2021	3:13:43 PM	8.58	1.16	4.93	2.12	2.23	9.02	1.22	10.24	16.45
RUN_1_Unit 5_0435.LAB	6/9/2021	3:13:51 PM	8.40	1.27	4.94	2.54	2.67	8.83	1.34	10.17	16.46
RUN_1_Unit 5_0436.LAB	6/9/2021	3:13:58 PM	8.40	1.28	4.91	2.61	2.75	8.83	1.34	10.17	16.46
RUN_1_Unit 5_0437.LAB	6/9/2021	3:14:06 PM	8.34	1.12	4.89	1.57	1.65	8.77	1.18	9.95	16.47
RUN_1_Unit 5_0438.LAB	6/9/2021	3:14:13 PM	8.60	1.15	4.91	1.23	1.29	9.04	1.21	10.25	16.45
RUN_1_Unit 5_0439.LAB	6/9/2021	3:14:21 PM	7.94	1.14	4.89	1.97	2.08	8.35	1.20	9.55	16.46
RUN_1_Unit 5_0440.LAB	6/9/2021	3:14:28 PM	8.43	1.38	4.91	2.16	2.27	8.87	1.45	10.31	16.45
RUN_1_Unit 5_0441.LAB	6/9/2021	3:14:36 PM	8.75	1.32	4.93	1.64	1.72	9.21	1.39	10.59	16.46
RUN_1_Unit 5_0442.LAB	6/9/2021	3:14:44 PM	8.28	1.22	4.86	2.01	2.11	8.70	1.28	9.99	16.47
RUN_1_Unit 5_0443.LAB	6/9/2021	3:14:51 PM	8.90	1.11	4.85	1.50	1.58	9.36	1.16	10.52	16.46
RUN_1_Unit 5_0444.LAB	6/9/2021	3:14:58 PM	9.33	1.18	4.86	1.44	1.51	9.81	1.24	11.05	16.46
RUN_1_Unit 5_0445.LAB	6/9/2021	3:15:06 PM	8.77	1.18	4.87	2.09	2.19	9.22	1.24	10.47	16.46
RUN_1_Unit 5_0446.LAB	6/9/2021	3:15:13 PM	8.26	1.18	4.84	1.91	2.00	8.68	1.24	9.92	16.46
RUN_1_Unit 5_0447.LAB	6/9/2021	3:15:21 PM	8.69	1.17	4.90	1.18	1.24	9.14	1.23	10.37	16.45
RUN_1_Unit 5_0448.LAB	6/9/2021	3:15:28 PM	9.38	1.09	4.83	1.83	1.93	9.86	1.15	11.01	16.46
RUN_1_Unit 5_0449.LAB	6/9/2021	3:15:36 PM	8.12	1.38	4.89	1.98	2.09	8.54	1.45	9.99	16.47
RUN_1_Unit 5_0450.LAB	6/9/2021	3:15:43 PM	8.21	1.11	4.93	2.25	2.37	8.64	1.17	9.81	16.46

RUN_1_Unit 5_0451.LAB	6/9/2021	3:15:51 PM	8.44	1.12	4.92	2.67	2.80	8.87	1.18	10.05	16.46
RUN_1_Unit 5_0452.LAB	6/9/2021	3:15:59 PM	8.99	1.15	4.88	1.42	1.49	9.45	1.21	10.65	16.46
RUN_1_Unit 5_0453.LAB	6/9/2021	3:16:06 PM	8.72	1.10	4.88	2.31	2.43	9.17	1.15	10.32	16.46
RUN_1_Unit 5_0454.LAB	6/9/2021	3:16:13 PM	7.92	1.25	4.87	2.47	2.59	8.33	1.32	9.64	16.46
RUN_1_Unit 5_0455.LAB	6/9/2021	3:16:21 PM	8.38	0.94	4.88	1.32	1.39	8.81	0.99	9.80	16.47
RUN_1_Unit 5_0456.LAB	6/9/2021	3:16:28 PM	8.66	1.10	4.88	1.43	1.51	9.10	1.16	10.26	16.48
RUN_1_Unit 5_0457.LAB	6/9/2021	3:16:36 PM	8.25	1.05	4.86	1.37	1.44	8.67	1.11	9.78	16.46
RUN_1_Unit 5_0458.LAB	6/9/2021	3:16:44 PM	8.65	1.24	4.82	1.28	1.35	9.09	1.31	10.40	16.47
RUN_1_Unit 5_0459.LAB	6/9/2021	3:16:51 PM	8.53	1.35	4.84	0.57	0.60	8.96	1.41	10.37	16.45
RUN_1_Unit 5_0460.LAB	6/9/2021	3:16:59 PM	8.64	1.00	4.86	1.39	1.47	9.08	1.05	10.13	16.47
RUN_1_Unit 5_0461.LAB	6/9/2021	3:17:06 PM	9.09	1.15	4.88	2.00	2.11	9.55	1.21	10.76	16.46
RUN_1_Unit 5_0462.LAB	6/9/2021	3:17:14 PM	8.42	1.25	4.89	0.61	0.64	8.86	1.32	10.18	16.47
RUN_1_Unit 5_0463.LAB	6/9/2021	3:17:21 PM	8.92	1.38	4.86	1.81	1.90	9.38	1.45	10.83	16.45
RUN_1_Unit 5_0464.LAB	6/9/2021	3:17:29 PM	8.91	1.28	4.90	0.88	0.93	9.36	1.35	10.71	16.47
RUN_1_Unit 5_0465.LAB	6/9/2021	3:17:36 PM	8.50	1.35	4.87	0.83	0.88	8.94	1.42	10.36	16.47
RUN_1_Unit 5_0466.LAB	6/9/2021	3:17:44 PM	8.38	1.11	4.89	1.88	1.98	8.81	1.17	9.98	16.47
RUN_1_Unit 5_0467.LAB	6/9/2021	3:17:52 PM	8.87	1.23	4.87	2.10	2.21	9.33	1.29	10.62	16.46
RUN_1_Unit 5_0468.LAB	6/9/2021	3:17:59 PM	7.94	1.28	4.91	1.76	1.85	8.35	1.34	9.69	16.48
RUN_1_Unit 5_0469.LAB	6/9/2021	3:18:06 PM	8.92	1.22	4.87	1.34	1.41	9.38	1.29	10.67	16.47
RUN_1_Unit 5_0470.LAB	6/9/2021	3:18:14 PM	8.62	1.24	4.87	1.48	1.56	9.06	1.31	10.36	16.45
RUN_1_Unit 5_0471.LAB	6/9/2021	3:18:21 PM	8.42	1.19	4.85	1.59	1.68	8.85	1.25	10.11	16.47
RUN_1_Unit 5_0472.LAB	6/9/2021	3:18:29 PM	7.96	1.15	4.90	1.39	1.47	8.37	1.21	9.58	16.46
RUN_1_Unit 5_0473.LAB	6/9/2021	3:18:36 PM	8.81	1.30	4.89	1.75	1.84	9.26	1.37	10.64	16.45
RUN_1_Unit 5_0474.LAB	6/9/2021	3:18:44 PM	8.55	1.17	4.87	1.77	1.86	8.98	1.23	10.22	16.46
RUN_1_Unit 5_0475.LAB	6/9/2021	3:18:51 PM	8.32	1.19	4.85	1.06	1.11	8.74	1.25	9.99	16.48
RUN_1_Unit 5_0476.LAB	6/9/2021	3:18:59 PM	8.23	1.37	4.86	1.71	1.79	8.65	1.44	10.09	16.46
RUN_1_Unit 5_0477.LAB	6/9/2021	3:19:06 PM	8.86	1.16	4.91	2.38	2.50	9.31	1.22	10.53	16.45
RUN_1_Unit 5_0478.LAB	6/9/2021	3:19:14 PM	8.41	1.26	4.89	1.70	1.78	8.84	1.33	10.17	16.48
RUN_1_Unit 5_0479.LAB	6/9/2021	3:19:21 PM	8.54	1.15	4.86	1.48	1.56	8.98	1.21	10.19	16.45
RUN_1_Unit 5_0480.LAB	6/9/2021	3:19:29 PM	8.63	1.39	4.84	1.31	1.37	9.07	1.46	10.53	16.47
RUN_1_Unit 5_0481.LAB	6/9/2021	3:19:36 PM	8.69	1.22	4.88	1.40	1.47	9.13	1.28	10.41	16.46
RUN_1_Unit 5_0482.LAB	6/9/2021	3:19:44 PM	7.81	1.10	4.86	1.63	1.71	8.21	1.16	9.37	16.46
RUN_1_Unit 5_0483.LAB	6/9/2021	3:19:52 PM	8.71	1.25	4.88	1.72	1.81	9.16	1.32	10.48	16.47
RUN_1_Unit 5_0484.LAB	6/9/2021	3:19:59 PM	8.82	1.05	4.84	1.64	1.72	9.27	1.10	10.37	16.45
RUN_1_Unit 5_0485.LAB	6/9/2021	3:20:06 PM	8.86	0.98	4.87	2.23	2.35	9.31	1.03	10.34	16.45
RUN_1_Unit 5_0486.LAB	6/9/2021	3:20:14 PM	8.32	1.26	4.86	1.79	1.88	8.74	1.32	10.07	16.47
RUN_1_Unit 5_0487.LAB	6/9/2021	3:20:22 PM	8.84	1.49	4.88	1.74	1.83	9.29	1.57	10.86	16.47
RUN_1_Unit 5_0488.LAB	6/9/2021	3:20:29 PM	8.21	1.20	4.84	1.82	1.91	8.62	1.26	9.88	16.46
RUN_1_Unit 5_0489.LAB	6/9/2021	3:20:36 PM	8.59	1.14	4.89	1.37	1.45	9.03	1.19	10.22	16.48
RUN_1_Unit 5_0490.LAB	6/9/2021	3:20:44 PM	8.13	1.34	4.88	0.52	0.54	8.55	1.41	9.96	16.45
RUN_1_Unit 5_0491.LAB	6/9/2021	3:20:51 PM	8.22	1.35	4.87	2.13	2.24	8.65	1.42	10.06	16.46
RUN_1_Unit 5_0492.LAB	6/9/2021	3:20:59 PM	8.25	1.26	4.88	1.45	1.52	8.67	1.32	10.00	16.47
RUN_1_Unit 5_0493.LAB	6/9/2021	3:21:06 PM	8.78	1.27	4.87	1.83	1.92	9.23	1.33	10.56	16.46
RUN_1_Unit 5_0494.LAB	6/9/2021	3:21:14 PM	8.69	1.38	4.91	1.30	1.37	9.13	1.45	10.59	16.47
RUN_1_Unit 5_0495.LAB	6/9/2021	3:21:21 PM	8.79	1.13	4.86	1.93	2.03	9.23	1.19	10.42	16.47
RUN_1_Unit 5_0496.LAB	6/9/2021	3:21:29 PM	8.69	1.01	4.84	1.54	1.62	9.14	1.06	10.20	16.46
RUN_1_Unit 5_0497.LAB	6/9/2021	3:21:36 PM	8.54	1.28	4.92	1.50	1.57	8.98	1.35	10.32	16.46
RUN_1_Unit 5_0498.LAB	6/9/2021	3:21:44 PM	8.36	1.35	4.92	2.71	2.85	8.79	1.42	10.22	16.47
RUN_1_Unit 5_0499.LAB	6/9/2021	3:21:51 PM	8.55	1.23	4.91	1.50	1.57	8.99	1.29	10.29	16.46
RUN_1_Unit 5_0500.LAB	6/9/2021	3:21:59 PM	8.24	1.34	4.89	0.93	0.97	8.66	1.41	10.07	16.45
RUN_1_Unit 5_0501.LAB	6/9/2021	3:22:06 PM	8.42	1.15	4.92	2.38	2.50	8.86	1.21	10.06	16.46
RUN_1_Unit 5_0502.LAB	6/9/2021	3:22:14 PM	8.53	1.16	4.88	1.63	1.72	8.96	1.22	10.19	16.45
RUN_1_Unit 5_0503.LAB	6/9/2021	3:22:21 PM	8.86	1.20	4.89	1.94	2.04	9.31	1.26	10.58	16.45
RUN_1_Unit 5_0504.LAB	6/9/2021	3:22:29 PM	8.41	1.06	4.88	2.77	2.91	8.84	1.11	9.95	16.45
RUN_1_Unit 5_0505.LAB	6/9/2021	3:22:36 PM	9.06	1.31	4.90	2.41	2.54	9.52	1.38	10.90	16.46
RUN_1_Unit 5_0506.LAB	6/9/2021	3:22:44 PM	8.66	1.01	4.91	2.10	2.21	9.11	1.06	10.17	16.46
RUN_1_Unit 5_0507.LAB	6/9/2021	3:22:51 PM	8.58	1.26	4.88	1.69	1.78	9.02	1.33	10.35	16.46
RUN_1_Unit 5_0508.LAB	6/9/2021	3:22:59 PM	8.45	1.44	4.85	2.11	2.22	8.88	1.51	10.39	16.47
RUN_1_Unit 5_0509.LAB	6/9/2021	3:23:07 PM	8.60	1.10	4.92	1.77	1.86	9.05	1.16	10.21	16.48
RUN_1_Unit 5_0510.LAB	6/9/2021	3:23:14 PM	8.00	1.18	4.94	1.48	1.56	8.41	1.24	9.65	16.47
RUN_1_Unit 5_0511.LAB	6/9/2021	3:23:22 PM	8.24	1.17	4.93	1.97	2.07	8.67	1.23	9.90	16.47
RUN_1_Unit 5_0512.LAB	6/9/2021	3:23:29 PM	8.14	1.33	4.89	2.70	2.84	8.56	1.40	9.96	16.47
RUN_1_Unit 5_0513.LAB	6/9/2021	3:23:37 PM	8.30	1.03	4.88	1.90	2.00	8.73	1.09	9.82	16.49
RUN_1_Unit 5_0514.LAB	6/9/2021	3:23:44 PM	8.49	1.27	4.88	2.16	2.27	8.93	1.34	10.27	16.48
RUN_1_Unit 5_0515.LAB	6/9/2021	3:23:52 PM	8.07	1.36	4.90	2.25	2.37	8.48	1.43	9.91	16.48
RUN_1_Unit 5_0516.LAB	6/9/2021	3:23:59 PM	8.23	1.29	4.89	2.34	2.46	8.65	1.36	10.01	16.47

RUN_1_Unit 5_0517.LAB	6/9/2021	3:24:07 PM	8.41	1.35	4.89	2.19	2.30	8.84	1.42	10.27	16.46
RUN_1_Unit 5_0518.LAB	6/9/2021	3:24:14 PM	8.09	1.49	4.95	2.32	2.44	8.51	1.56	10.07	16.47
RUN_1_Unit 5_0519.LAB	6/9/2021	3:24:22 PM	8.29	1.64	4.89	2.36	2.48	8.72	1.72	10.44	16.47
RUN_1_Unit 5_0520.LAB	6/9/2021	3:24:29 PM	8.62	1.38	4.94	1.48	1.55	9.07	1.46	10.53	16.47
RUN_1_Unit 5_0521.LAB	6/9/2021	3:24:37 PM	8.33	1.21	4.88	0.97	1.02	8.76	1.27	10.04	16.47
RUN_1_Unit 5_0522.LAB	6/9/2021	3:24:44 PM	7.99	1.39	4.89	2.61	2.74	8.40	1.46	9.86	16.48
RUN_1_Unit 5_0523.LAB	6/9/2021	3:24:52 PM	8.94	1.26	4.94	2.08	2.19	9.40	1.33	10.73	16.47
RUN_1_Unit 5_0524.LAB	6/9/2021	3:24:59 PM	8.41	1.19	4.93	2.43	2.55	8.84	1.26	10.10	16.48
RUN_1_Unit 5_0525.LAB	6/9/2021	3:25:07 PM	7.97	1.21	4.89	1.49	1.57	8.38	1.27	9.65	16.48
RUN_1_Unit 5_0526.LAB	6/9/2021	3:25:14 PM	8.75	1.21	4.89	1.19	1.25	9.20	1.27	10.47	16.47
RUN_1_Unit 5_0527.LAB	6/9/2021	3:25:22 PM	8.45	1.14	4.93	1.83	1.92	8.89	1.20	10.09	16.46
RUN_1_Unit 5_0528.LAB	6/9/2021	3:25:29 PM	8.37	1.28	4.94	1.63	1.71	8.81	1.34	10.15	16.47
RUN_1_Unit 5_0529.LAB	6/9/2021	3:25:37 PM	8.78	1.14	4.89	1.34	1.41	9.23	1.20	10.43	16.47
RUN_1_Unit 5_0530.LAB	6/9/2021	3:25:44 PM	8.43	1.33	4.90	1.43	1.50	8.87	1.40	10.27	16.45
RUN_1_Unit 5_0531.LAB	6/9/2021	3:25:52 PM	8.61	1.08	4.94	1.37	1.45	9.06	1.14	10.20	16.46
RUN_1_Unit 5_0532.LAB	6/9/2021	3:26:00 PM	8.16	1.21	4.86	1.16	1.22	8.58	1.27	9.85	16.46
RUN_1_Unit 5_0533.LAB	6/9/2021	3:26:07 PM	8.53	1.32	4.86	2.20	2.31	8.97	1.39	10.36	16.47
RUN_1_Unit 5_0534.LAB	6/9/2021	3:26:14 PM	9.06	1.22	4.91	2.51	2.64	9.52	1.29	10.81	16.46
RUN_1_Unit 5_0535.LAB	6/9/2021	3:26:22 PM	7.97	1.38	4.89	2.39	2.51	8.38	1.45	9.83	16.46
RUN_1_Unit 5_0536.LAB	6/9/2021	3:26:29 PM	8.58	1.09	4.90	1.91	2.01	9.03	1.15	10.18	16.48
RUN_1_Unit 5_0537.LAB	6/9/2021	3:26:37 PM	8.64	1.08	4.92	2.31	2.42	9.09	1.14	10.23	16.46
RUN_1_Unit 5_0538.LAB	6/9/2021	3:26:45 PM	8.29	1.38	4.94	2.55	2.68	8.73	1.45	10.18	16.47
RUN_1_Unit 5_0539.LAB	6/9/2021	3:26:52 PM	8.35	1.23	4.90	1.77	1.86	8.78	1.29	10.07	16.47
RUN_1_Unit 5_0540.LAB	6/9/2021	3:27:00 PM	8.71	1.01	4.93	1.89	1.99	9.16	1.07	10.23	16.46
RUN_1_Unit 5_0541.LAB	6/9/2021	3:27:07 PM	8.90	1.35	4.93	2.22	2.34	9.36	1.42	10.78	16.46
RUN_1_Unit 5_0542.LAB	6/9/2021	3:27:14 PM	7.96	1.30	4.91	3.09	3.25	8.37	1.37	9.74	16.45
RUN_1_Unit 5_0543.LAB	6/9/2021	3:27:22 PM	8.47	1.34	4.92	3.22	3.38	8.91	1.41	10.32	16.48
RUN_1_Unit 5_0544.LAB	6/9/2021	3:27:29 PM	8.71	1.13	4.90	2.39	2.52	9.16	1.19	10.35	16.45
RUN_1_Unit 5_0545.LAB	6/9/2021	3:27:37 PM	8.53	1.37	4.88	1.35	1.42	8.97	1.44	10.41	16.47
RUN_1_Unit 5_0546.LAB	6/9/2021	3:27:44 PM	7.89	1.50	4.92	1.47	1.54	8.30	1.57	9.87	16.46
RUN_1_Unit 5_0547.LAB	6/9/2021	3:27:52 PM	7.69	1.34	4.87	1.86	1.96	8.09	1.41	9.49	16.45
RUN_1_Unit 5_0548.LAB	6/9/2021	3:27:59 PM	8.20	1.14	4.92	1.88	1.98	8.63	1.20	9.83	16.46
RUN_1_Unit 5_0549.LAB	6/9/2021	3:28:07 PM	7.88	1.31	4.93	2.78	2.93	8.29	1.38	9.67	16.45
RUN_1_Unit 5_0550.LAB	6/9/2021	3:28:14 PM	8.66	1.38	4.89	2.62	2.75	9.11	1.45	10.56	16.47
RUN_1_Unit 5_0551.LAB	6/9/2021	3:28:22 PM	8.03	1.30	4.92	2.18	2.30	8.44	1.37	9.81	16.46
RUN_1_Unit 5_0552.LAB	6/9/2021	3:28:30 PM	8.34	1.39	4.94	2.12	2.24	8.78	1.47	10.24	16.47
RUN_1_Unit 5_0553.LAB	6/9/2021	3:28:37 PM	7.99	1.26	4.93	2.18	2.29	8.40	1.32	9.72	16.49
RUN_1_Unit 5_0554.LAB	6/9/2021	3:28:45 PM	8.67	1.21	4.94	1.46	1.54	9.12	1.27	10.40	16.49
RUN_1_Unit 5_0555.LAB	6/9/2021	3:28:52 PM	8.39	1.63	4.91	1.85	1.94	8.82	1.72	10.54	16.50
RUN_1_Unit 5_0556.LAB	6/9/2021	3:29:00 PM	8.12	1.30	4.92	2.14	2.25	8.54	1.37	9.90	16.47
RUN_1_Unit 5_0557.LAB	6/9/2021	3:29:07 PM	7.98	1.27	4.96	1.50	1.58	8.40	1.34	9.73	16.47
RUN_1_Unit 5_0558.LAB	6/9/2021	3:29:15 PM	8.29	1.36	4.90	1.52	1.60	8.72	1.43	10.16	16.46
RUN_1_Unit 5_0559.LAB	6/9/2021	3:29:22 PM	8.63	1.34	4.91	2.06	2.17	9.08	1.41	10.49	16.46
RUN_1_Unit 5_0560.LAB	6/9/2021	3:29:30 PM	8.14	1.29	4.93	1.49	1.57	8.56	1.36	9.92	16.46
RUN_1_Unit 5_0561.LAB	6/9/2021	3:29:37 PM	8.42	1.21	4.94	2.29	2.41	8.85	1.27	10.12	16.46
RUN_1_Unit 5_0562.LAB	6/9/2021	3:29:45 PM	8.85	1.34	4.94	2.07	2.18	9.31	1.41	10.72	16.47
RUN_1_Unit 5_0563.LAB	6/9/2021	3:29:52 PM	7.65	1.48	4.90	1.35	1.41	8.04	1.56	9.60	16.46
RUN_1_Unit 5_0564.LAB	6/9/2021	3:30:00 PM	8.10	1.64	4.94	1.57	1.65	8.52	1.72	10.25	16.47
RUN_1_Unit 5_0565.LAB	6/9/2021	3:30:07 PM	8.57	1.36	4.93	1.75	1.84	9.01	1.44	10.45	16.46
RUN_1_Unit 5_0566.LAB	6/9/2021	3:30:15 PM	8.22	1.30	4.90	1.90	2.00	8.64	1.36	10.00	16.46
RUN_1_Unit 5_0567.LAB	6/9/2021	3:30:22 PM	8.11	1.39	4.92	1.55	1.63	8.53	1.46	10.00	16.45
RUN_1_Unit 5_0568.LAB	6/9/2021	3:30:30 PM	8.11	1.29	4.95	2.28	2.40	8.53	1.35	9.89	16.45
RUN_1_Unit 5_0569.LAB	6/9/2021	3:30:37 PM	8.34	1.44	4.92	2.55	2.68	8.77	1.52	10.29	16.46
RUN_1_Unit 5_0570.LAB	6/9/2021	3:30:45 PM	8.13	1.43	4.93	2.93	3.08	8.55	1.51	10.06	16.45
RUN_1_Unit 5_0571.LAB	6/9/2021	3:30:52 PM	8.50	1.48	4.91	2.73	2.87	8.94	1.55	10.50	16.46
RUN_1_Unit 5_0572.LAB	6/9/2021	3:31:00 PM	8.11	1.55	4.88	2.40	2.53	8.53	1.62	10.15	16.46
RUN_1_Unit 5_0573.LAB	6/9/2021	3:31:07 PM	7.84	1.66	4.92	3.10	3.26	8.24	1.75	9.99	16.46
RUN_1_Unit 5_0574.LAB	6/9/2021	3:31:15 PM	7.69	1.50	4.90	3.20	3.36	8.08	1.58	9.66	16.45
RUN_1_Unit 5_0575.LAB	6/9/2021	3:31:22 PM	8.80	1.38	4.93	2.58	2.72	9.25	1.46	10.71	16.46
RUN_1_Unit 5_0576.LAB	6/9/2021	3:31:30 PM	8.91	1.31	4.94	2.44	2.57	9.38	1.38	10.76	16.46
RUN_1_Unit 5_0577.LAB	6/9/2021	3:31:37 PM	7.54	1.28	4.91	1.71	1.80	7.93	1.35	9.27	16.46
RUN_1_Unit 5_0578.LAB	6/9/2021	3:31:45 PM	8.18	1.36	4.91	1.09	1.15	8.60	1.43	10.03	16.47

Spectrum	Date	Time	NO (350,300(	NO2 (150) 19	H2O% (40) 1(	CO (500) 191	CO ppm Dry	NO Dry	NO2 Dry	NOx Dry	O2 Dry
RUN_1_Unit 5_0579.LAB	6/9/2021	3:33:08 PM	8.16	1.49	4.92	1.79	1.88	8.58	1.57	10.15	16.45
RUN_1_Unit 5_0580.LAB	6/9/2021	3:34:09 PM	7.91	1.48	4.93	2.08	2.19	8.32	1.56	9.88	16.45

RUN_1_Unit 5_0581.LAB	6/9/2021	3:35:09 PM	7.95	1.57	4.91	2.33	2.45	8.36	1.65	10.01	16.45
RUN_1_Unit 5_0582.LAB	6/9/2021	3:36:09 PM	7.90	1.54	4.95	1.99	2.09	8.31	1.62	9.93	16.45
RUN_1_Unit 5_0583.LAB	6/9/2021	3:37:09 PM	7.94	1.59	4.92	2.05	2.15	8.35	1.67	10.02	16.45
RUN_1_Unit 5_0584.LAB	6/9/2021	3:38:09 PM	7.97	1.49	4.93	1.63	1.72	8.38	1.57	9.95	16.46
RUN_1_Unit 5_0585.LAB	6/9/2021	3:39:09 PM	8.01	1.53	4.94	1.83	1.93	8.43	1.61	10.04	16.45
RUN_1_Unit 5_0586.LAB	6/9/2021	3:40:09 PM	7.88	1.64	4.93	2.49	2.62	8.29	1.72	10.01	16.45
RUN_1_Unit 5_0587.LAB	6/9/2021	3:41:09 PM	8.15	1.58	4.94	1.92	2.02	8.57	1.66	10.23	16.45
RUN_1_Unit 5_0588.LAB	6/9/2021	3:42:09 PM	8.24	1.55	4.93	1.67	1.75	8.67	1.63	10.31	16.46
RUN_1_Unit 5_0589.LAB	6/9/2021	3:43:09 PM	8.04	1.67	4.93	2.64	2.78	8.45	1.76	10.21	16.46
RUN_1_Unit 5_0590.LAB	6/9/2021	3:44:10 PM	7.91	1.67	4.91	2.42	2.54	8.32	1.76	10.08	16.45
RUN_1_Unit 5_0591.LAB	6/9/2021	3:45:09 PM	7.92	1.67	4.94	2.05	2.16	8.34	1.76	10.09	16.47
RUN_1_Unit 5_0592.LAB	6/9/2021	3:46:09 PM	8.05	1.63	4.90	1.89	1.99	8.47	1.72	10.18	16.50
RUN_1_Unit 5_0593.LAB	6/9/2021	3:47:10 PM	8.17	1.65	4.88	2.06	2.16	8.59	1.73	10.32	16.48
RUN_1_Unit 5_0594.LAB	6/9/2021	3:48:10 PM	8.06	1.68	4.90	1.35	1.42	8.47	1.76	10.24	16.45
RUN_1_Unit 5_0595.LAB	6/9/2021	3:49:10 PM	8.05	1.70	4.92	1.61	1.69	8.47	1.79	10.26	16.47
RUN_1_Unit 5_0596.LAB	6/9/2021	3:50:10 PM	8.06	1.58	4.87	1.80	1.89	8.48	1.66	10.14	16.45
RUN_1_Unit 5_0597.LAB	6/9/2021	3:51:10 PM	8.03	1.68	4.91	1.80	1.90	8.45	1.77	10.22	16.45
RUN_1_Unit 5_0598.LAB	6/9/2021	3:52:10 PM	8.00	1.59	4.90	1.77	1.86	8.41	1.67	10.08	16.46
RUN_1_Unit 5_0599.LAB	6/9/2021	3:53:10 PM	8.07	1.62	4.89	1.92	2.02	8.49	1.70	10.19	16.46
RUN_1_Unit 5_0600.LAB	6/9/2021	3:54:10 PM	8.03	1.75	4.88	2.10	2.20	8.44	1.84	10.28	16.48
RUN_1_Unit 5_0601.LAB	6/9/2021	3:55:10 PM	7.99	1.61	4.89	1.91	2.01	8.40	1.69	10.09	16.46
RUN_1_Unit 5_0602.LAB	6/9/2021	3:56:10 PM	8.15	1.69	4.91	1.91	2.01	8.57	1.77	10.34	16.45
RUN_1_Unit 5_0603.LAB	6/9/2021	3:57:10 PM	8.28	1.69	4.92	1.74	1.83	8.71	1.77	10.48	16.45
RUN_1_Unit 5_0604.LAB	6/9/2021	3:58:10 PM	8.04	1.72	4.92	1.67	1.75	8.46	1.80	10.27	16.43
RUN_1_Unit 5_0605.LAB	6/9/2021	3:59:10 PM	8.24	1.80	4.93	1.29	1.36	8.67	1.90	10.56	16.45
RUN_1_Unit 5_0606.LAB	6/9/2021	4:00:11 PM	7.84	1.73	4.93	1.85	1.94	8.25	1.82	10.06	16.44
RUN_1_Unit 5_0607.LAB	6/9/2021	4:01:11 PM	8.00	1.82	4.91	1.67	1.75	8.42	1.91	10.33	16.44
RUN_1_Unit 5_0608.LAB	6/9/2021	4:02:11 PM	8.05	1.74	4.92	1.58	1.66	8.47	1.83	10.30	16.46
RUN_1_Unit 5_0609.LAB	6/9/2021	4:03:11 PM	7.92	1.82	4.91	1.63	1.72	8.33	1.91	10.25	16.46
RUN_1_Unit 5_0610.LAB	6/9/2021	4:04:11 PM	7.89	1.82	4.90	1.55	1.63	8.30	1.91	10.21	16.45
RUN_1_Unit 5_0611.LAB	6/9/2021	4:05:11 PM	8.07	1.86	4.90	1.69	1.77	8.48	1.95	10.44	16.46
RUN_1_Unit 5_0612.LAB	6/9/2021	4:06:11 PM	8.00	1.85	4.91	1.52	1.60	8.41	1.94	10.36	16.45

Spectrum	Date	Time	NO (350,300(	NO2 (150) 19	H2O% (40) 1(	CO (500) 191	CO ppm Dry	NO Dry	NO2 Dry	NOx Dry	O2 Dry
POST_RUN_1_Unit 5_0613.LAB	6/9/2021	4:07:10 PM	8.67	7.69	4.29	49.62	51.84	9.06	8.04	17.10	16.45
POST_RUN_1_Unit 5_0614.LAB	6/9/2021	4:07:18 PM	17.90	54.50	0.74	30.85	31.08	18.03	54.91	72.94	10.02
POST_RUN_1_Unit 5_0615.LAB	6/9/2021	4:07:25 PM	19.16	86.31	0.12	1.86	1.87	19.18	86.41	105.60	8.44
POST_RUN_1_Unit 5_0616.LAB	6/9/2021	4:07:33 PM	17.86	93.37	0.07	0.75	0.75	17.87	93.44	111.31	8.73
POST_RUN_1_Unit 5_0617.LAB	6/9/2021	4:07:41 PM	15.65	95.77	0.06	1.30	1.30	15.66	95.83	111.49	8.73
POST_RUN_1_Unit 5_0618.LAB	6/9/2021	4:07:48 PM	15.15	96.92	0.06	0.71	0.71	15.16	96.98	112.15	8.73
POST_RUN_1_Unit 5_0619.LAB	6/9/2021	4:07:55 PM	14.69	98.85	0.02	0.61	0.61	14.69	98.87	113.56	8.71
POST_RUN_1_Unit 5_0620.LAB	6/9/2021	4:08:03 PM	13.68	99.73	0.05	0.22	0.22	13.69	99.78	113.47	8.71
POST_RUN_1_Unit 5_0621.LAB	6/9/2021	4:08:10 PM	13.20	99.40	0.02	0.35	0.35	13.20	99.42	112.63	8.71
POST_RUN_1_Unit 5_0622.LAB	6/9/2021	4:08:18 PM	12.87	100.72	0.02	0.65	0.65	12.87	100.74	113.61	8.70
POST_RUN_1_Unit 5_0623.LAB	6/9/2021	4:08:26 PM	12.58	102.14	0.02	0.35	0.35	12.58	102.16	114.74	8.72
POST_RUN_1_Unit 5_0624.LAB	6/9/2021	4:08:33 PM	11.14	95.84	0.04	0.54	0.54	11.14	95.88	107.02	8.71
POST_RUN_1_Unit 5_0625.LAB	6/9/2021	4:08:40 PM	4.22	23.24	0.04	1.03	1.03	4.22	23.25	27.47	4.17
POST_RUN_1_Unit 5_0626.LAB	6/9/2021	4:08:48 PM	11.39	42.50	0.04	43.04	43.05	11.39	42.51	53.90	1.95
POST_RUN_1_Unit 5_0627.LAB	6/9/2021	4:08:55 PM	31.49	59.24	0.02	99.72	99.73	31.49	59.25	90.74	0.41
POST_RUN_1_Unit 5_0628.LAB	6/9/2021	4:09:03 PM	60.32	37.45	0.02	104.56	104.58	60.33	37.46	97.79	0.02
POST_RUN_1_Unit 5_0629.LAB	6/9/2021	4:09:10 PM	90.57	11.01	0.03	106.47	106.50	90.60	11.02	101.61	-0.02
POST_RUN_1_Unit 5_0630.LAB	6/9/2021	4:09:18 PM	97.09	5.30	0.01	107.10	107.11	97.09	5.30	102.39	-0.02
POST_RUN_1_Unit 5_0631.LAB	6/9/2021	4:09:26 PM	97.42	3.94	0.01	108.10	108.10	97.43	3.94	101.37	-0.04
POST_RUN_1_Unit 5_0632.LAB	6/9/2021	4:09:33 PM	97.45	3.19	0.01	105.99	106.00	97.46	3.19	100.65	-0.03
POST_RUN_1_Unit 5_0633.LAB	6/9/2021	4:09:40 PM	97.22	2.97	0.02	106.25	106.27	97.23	2.97	100.20	-0.05
POST_RUN_1_Unit 5_0634.LAB	6/9/2021	4:09:48 PM	98.06	2.74	0.03	106.20	106.22	98.09	2.74	100.82	-0.03
POST_RUN_1_Unit 5_0635.LAB	6/9/2021	4:09:55 PM	98.83	2.40	0.00	106.97	106.96	98.83	2.40	101.23	-0.06
POST_RUN_1_Unit 5_0636.LAB	6/9/2021	4:10:03 PM	100.65	2.43	0.04	109.18	109.22	100.69	2.43	103.13	-0.06
POST_RUN_1_Unit 5_0637.LAB	6/9/2021	4:10:10 PM	64.26	29.20	0.02	62.54	62.55	64.27	29.20	93.48	0.47
POST_RUN_1_Unit 5_0638.LAB	6/9/2021	4:10:18 PM	11.61	46.43	0.01	3.32	3.32	11.61	46.43	58.04	4.08
POST_RUN_1_Unit 5_0639.LAB	6/9/2021	4:10:25 PM	8.90	48.84	0.03	1.15	1.16	8.90	48.85	57.75	4.35
POST_RUN_1_Unit 5_0640.LAB	6/9/2021	4:10:33 PM	8.44	49.70	-0.01	1.28	1.28	8.43	49.70	58.13	4.36
POST_RUN_1_Unit 5_0641.LAB	6/9/2021	4:10:40 PM	7.98	50.09	0.00	0.72	0.72	7.98	50.09	58.07	4.36
POST_RUN_1_Unit 5_0642.LAB	6/9/2021	4:10:48 PM	6.94	50.60	0.01	0.02	0.02	6.94	50.61	57.55	4.37
POST_RUN_1_Unit 5_0643.LAB	6/9/2021	4:10:55 PM	7.38	50.74	0.02	0.55	0.55	7.38	50.75	58.14	4.37
POST_RUN_1_Unit 5_0644.LAB	6/9/2021	4:11:03 PM	7.99	50.97	0.01	0.77	0.77	7.99	50.98	58.96	4.38

POST_RUN_1_Unit 5_0645.LAB	6/9/2021	4:11:11 PM	7.03	50.98	0.02	0.52	0.52	7.03	50.99	58.03	4.37
POST_RUN_1_Unit 5_0646.LAB	6/9/2021	4:11:18 PM	5.92	27.39	0.95	3.22	3.25	5.97	27.65	33.62	5.54
POST_RUN_1_Unit 5_0647.LAB	6/9/2021	4:11:26 PM	1.08	2.55	0.19	0.87	0.87	1.08	2.55	3.63	1.49
POST_RUN_1_Unit 5_0648.LAB	6/9/2021	4:11:33 PM	0.29	0.26	0.07	0.23	0.23	0.29	0.26	0.55	0.01
POST_RUN_1_Unit 5_0649.LAB	6/9/2021	4:11:41 PM	0.78	0.12	0.03	1.04	1.04	0.78	0.12	0.91	-0.05
POST_RUN_1_Unit 5_0650.LAB	6/9/2021	4:11:48 PM	0.09	0.15	0.02	0.46	0.46	0.09	0.15	0.24	-0.06
POST_RUN_1_Unit 5_0651.LAB	6/9/2021	4:11:56 PM	0.46	0.11	0.02	-0.02	-0.02	0.46	0.11	0.57	-0.06
POST_RUN_1_Unit 5_0652.LAB	6/9/2021	4:12:03 PM	0.89	0.15	0.01	0.15	0.15	0.90	0.15	1.04	-0.08
POST_RUN_1_Unit 5_0653.LAB	6/9/2021	4:12:11 PM	0.37	0.11	0.03	-0.07	-0.07	0.37	0.12	0.49	-0.07
POST_RUN_1_Unit 5_0654.LAB	6/9/2021	4:12:18 PM	0.49	-0.04	0.01	-0.02	-0.02	0.49	-0.04	0.44	-0.08
POST_RUN_1_Unit 5_0655.LAB	6/9/2021	4:12:26 PM	0.58	0.13	0.02	0.24	0.24	0.58	0.13	0.71	-0.07

Spectrum	Date	Time	NO (350,300	NO2 (150) 19	H2O% (40) 1	CO (500) 191	CO ppm Dry	NO Dry	NO2 Dry	NOx Dry	O2 Dry
RUN_2_Unit 5_0656.LAB	6/9/2021	4:13:56 PM	7.34	2.80	4.83	2.15	2.26	7.71	2.94	10.65	16.45
RUN_2_Unit 5_0657.LAB	6/9/2021	4:14:56 PM	7.67	2.33	4.89	1.78	1.88	8.07	2.45	10.52	16.47
RUN_2_Unit 5_0658.LAB	6/9/2021	4:15:56 PM	7.59	2.09	4.88	2.04	2.14	7.98	2.20	10.18	16.47
RUN_2_Unit 5_0659.LAB	6/9/2021	4:16:56 PM	7.77	2.11	4.90	2.52	2.65	8.17	2.21	10.38	16.45
RUN_2_Unit 5_0660.LAB	6/9/2021	4:17:57 PM	7.79	1.96	4.87	2.24	2.35	8.18	2.06	10.25	16.45
RUN_2_Unit 5_0661.LAB	6/9/2021	4:18:57 PM	8.15	1.96	4.88	1.95	2.05	8.57	2.06	10.63	16.45
RUN_2_Unit 5_0662.LAB	6/9/2021	4:19:57 PM	8.24	1.92	4.87	2.26	2.38	8.66	2.02	10.68	16.45
RUN_2_Unit 5_0663.LAB	6/9/2021	4:20:57 PM	8.21	1.94	4.87	2.55	2.68	8.64	2.04	10.67	16.45
RUN_2_Unit 5_0664.LAB	6/9/2021	4:21:57 PM	8.09	1.91	4.89	1.81	1.91	8.51	2.00	10.51	16.45
RUN_2_Unit 5_0665.LAB	6/9/2021	4:22:57 PM	7.98	1.80	4.89	1.70	1.79	8.39	1.89	10.28	16.45
RUN_2_Unit 5_0666.LAB	6/9/2021	4:23:57 PM	8.17	1.79	4.90	1.80	1.89	8.59	1.89	10.48	16.45
RUN_2_Unit 5_0667.LAB	6/9/2021	4:24:57 PM	8.02	1.76	4.91	1.65	1.73	8.43	1.86	10.28	16.45
RUN_2_Unit 5_0668.LAB	6/9/2021	4:25:57 PM	7.89	1.88	4.89	1.69	1.78	8.29	1.97	10.26	16.46
RUN_2_Unit 5_0669.LAB	6/9/2021	4:26:58 PM	8.09	1.86	4.86	1.32	1.39	8.51	1.95	10.46	16.46
RUN_2_Unit 5_0670.LAB	6/9/2021	4:27:58 PM	8.05	1.80	4.89	1.72	1.81	8.47	1.89	10.36	16.44
RUN_2_Unit 5_0671.LAB	6/9/2021	4:28:58 PM	8.19	1.80	4.85	1.51	1.58	8.61	1.90	10.50	16.45
RUN_2_Unit 5_0672.LAB	6/9/2021	4:29:58 PM	8.05	1.84	4.86	1.72	1.81	8.46	1.93	10.40	16.48
RUN_2_Unit 5_0673.LAB	6/9/2021	4:30:58 PM	7.68	1.91	4.85	2.50	2.62	8.07	2.01	10.08	16.50
RUN_2_Unit 5_0674.LAB	6/9/2021	4:31:58 PM	7.90	2.02	4.83	2.03	2.13	8.30	2.12	10.42	16.45
RUN_2_Unit 5_0675.LAB	6/9/2021	4:32:58 PM	7.88	1.89	4.86	1.70	1.78	8.28	1.98	10.27	16.45
RUN_2_Unit 5_0676.LAB	6/9/2021	4:33:58 PM	7.78	1.89	4.87	2.59	2.72	8.18	1.99	10.17	16.48
RUN_2_Unit 5_0677.LAB	6/9/2021	4:34:58 PM	7.97	1.94	4.87	2.43	2.56	8.38	2.04	10.42	16.46
RUN_2_Unit 5_0678.LAB	6/9/2021	4:35:58 PM	7.79	1.88	4.89	2.04	2.14	8.20	1.98	10.18	16.50
RUN_2_Unit 5_0679.LAB	6/9/2021	4:36:58 PM	7.31	2.05	4.88	2.31	2.42	7.69	2.16	9.84	16.47
RUN_2_Unit 5_0680.LAB	6/9/2021	4:37:58 PM	7.62	1.96	4.90	2.20	2.32	8.01	2.06	10.08	16.46
RUN_2_Unit 5_0681.LAB	6/9/2021	4:38:58 PM	7.73	1.90	4.84	2.00	2.11	8.12	1.99	10.11	16.51
RUN_2_Unit 5_0682.LAB	6/9/2021	4:39:59 PM	7.75	1.91	4.78	1.86	1.95	8.14	2.00	10.15	16.50
RUN_2_Unit 5_0683.LAB	6/9/2021	4:40:58 PM	7.95	1.95	4.86	2.28	2.40	8.35	2.05	10.41	16.50
RUN_2_Unit 5_0684.LAB	6/9/2021	4:41:59 PM	7.80	1.92	4.82	2.12	2.22	8.20	2.01	10.21	16.48
RUN_2_Unit 5_0685.LAB	6/9/2021	4:42:59 PM	7.87	1.97	4.81	2.34	2.46	8.27	2.07	10.34	16.47
RUN_2_Unit 5_0686.LAB	6/9/2021	4:43:59 PM	7.94	1.87	4.81	2.08	2.18	8.34	1.97	10.31	16.48
RUN_2_Unit 5_0687.LAB	6/9/2021	4:44:59 PM	8.04	2.04	4.84	2.04	2.15	8.45	2.15	10.60	16.46
RUN_2_Unit 5_0688.LAB	6/9/2021	4:45:59 PM	7.90	2.01	4.85	2.12	2.22	8.31	2.11	10.42	16.48
RUN_2_Unit 5_0689.LAB	6/9/2021	4:46:59 PM	7.95	1.99	4.82	2.93	3.08	8.35	2.09	10.44	16.45
RUN_2_Unit 5_0690.LAB	6/9/2021	4:47:59 PM	7.71	2.02	4.89	2.85	2.99	8.10	2.12	10.22	16.47
RUN_2_Unit 5_0691.LAB	6/9/2021	4:48:59 PM	7.97	1.99	4.87	1.84	1.93	8.37	2.09	10.47	16.48
RUN_2_Unit 5_0692.LAB	6/9/2021	4:49:59 PM	7.45	1.95	4.85	2.33	2.45	7.83	2.05	9.88	16.45
RUN_2_Unit 5_0693.LAB	6/9/2021	4:51:00 PM	8.06	1.88	4.83	1.84	1.94	8.47	1.98	10.45	16.47
RUN_2_Unit 5_0694.LAB	6/9/2021	4:51:59 PM	7.88	1.88	4.86	2.18	2.29	8.28	1.98	10.26	16.45
RUN_2_Unit 5_0695.LAB	6/9/2021	4:53:00 PM	7.96	1.89	4.86	2.22	2.33	8.37	1.99	10.35	16.45
RUN_2_Unit 5_0696.LAB	6/9/2021	4:54:00 PM	7.75	1.91	4.86	1.76	1.85	8.15	2.01	10.15	16.45
RUN_2_Unit 5_0697.LAB	6/9/2021	4:55:00 PM	7.80	2.03	4.86	2.71	2.85	8.20	2.14	10.33	16.45
RUN_2_Unit 5_0698.LAB	6/9/2021	4:56:00 PM	7.74	2.01	4.89	2.29	2.41	8.14	2.12	10.26	16.45
RUN_2_Unit 5_0699.LAB	6/9/2021	4:57:00 PM	7.64	1.96	4.89	1.98	2.08	8.03	2.06	10.10	16.45
RUN_2_Unit 5_0700.LAB	6/9/2021	4:58:00 PM	7.64	1.92	4.92	2.40	2.52	8.03	2.02	10.05	16.48
RUN_2_Unit 5_0701.LAB	6/9/2021	4:59:00 PM	7.29	2.10	4.92	2.78	2.93	7.66	2.20	9.87	16.48
RUN_2_Unit 5_0702.LAB	6/9/2021	5:00:00 PM	7.58	2.10	4.91	2.47	2.60	7.98	2.21	10.19	16.49
RUN_2_Unit 5_0703.LAB	6/9/2021	5:01:00 PM	7.64	2.11	4.90	2.87	3.02	8.04	2.22	10.25	16.47
RUN_2_Unit 5_0704.LAB	6/9/2021	5:02:00 PM	7.55	2.06	4.91	2.25	2.36	7.94	2.17	10.11	16.46
RUN_2_Unit 5_0705.LAB	6/9/2021	5:03:00 PM	7.53	2.11	4.90	2.24	2.36	7.91	2.21	10.13	16.46
RUN_2_Unit 5_0706.LAB	6/9/2021	5:04:00 PM	7.68	2.16	4.92	1.92	2.02	8.07	2.27	10.34	16.46
RUN_2_Unit 5_0707.LAB	6/9/2021	5:05:01 PM	7.61	2.15	4.94	2.09	2.20	8.01	2.26	10.27	16.45
RUN_2_Unit 5_0708.LAB	6/9/2021	5:06:01 PM	7.47	2.07	4.93	2.21	2.32	7.86	2.18	10.04	16.47

RUN_2_Unit 5_0709.LAB	6/9/2021	5:07:01 PM	7.49	2.15	4.92	1.71	1.80	7.87	2.26	10.14	16.47
RUN_2_Unit 5_0710.LAB	6/9/2021	5:08:01 PM	7.60	2.17	4.93	1.88	1.98	7.99	2.28	10.27	16.46
RUN_2_Unit 5_0711.LAB	6/9/2021	5:09:01 PM	7.60	2.15	4.91	1.93	2.03	8.00	2.26	10.26	16.48
RUN_2_Unit 5_0712.LAB	6/9/2021	5:10:01 PM	7.51	2.01	4.87	1.54	1.62	7.89	2.11	10.01	16.47
RUN_2_Unit 5_0713.LAB	6/9/2021	5:11:01 PM	7.58	2.19	4.92	2.39	2.52	7.97	2.31	10.28	16.47
RUN_2_Unit 5_0714.LAB	6/9/2021	5:12:01 PM	7.12	2.12	4.92	2.81	2.95	7.49	2.23	9.72	16.45
RUN_2_Unit 5_0715.LAB	6/9/2021	5:13:01 PM	7.42	2.11	4.92	2.52	2.65	7.80	2.22	10.02	16.48
RUN_2_Unit 5_0716.LAB	6/9/2021	5:14:01 PM	7.56	2.11	4.92	2.06	2.16	7.95	2.22	10.17	16.49

Spectrum	Date	Time	NO (350,300(	NO2 (150) 19	H2O% (40) 1(	CO (500) 191	CO ppm Dry	NO Dry	NO2 Dry	NOx Dry	O2 Dry
POST_RUN_2_Unit 5_0717.LAB	6/9/2021	5:14:42 PM	7.50	2.37	4.72	12.93	13.57	7.87	2.48	10.36	16.48
POST_RUN_2_Unit 5_0718.LAB	6/9/2021	5:14:49 PM	8.28	14.86	1.20	52.60	53.24	8.38	15.04	23.42	12.79
POST_RUN_2_Unit 5_0719.LAB	6/9/2021	5:14:57 PM	13.31	34.83	0.18	2.62	2.63	13.33	34.90	48.23	4.22
POST_RUN_2_Unit 5_0720.LAB	6/9/2021	5:15:04 PM	12.11	42.36	0.10	-0.18	-0.18	12.12	42.40	54.52	4.37
POST_RUN_2_Unit 5_0721.LAB	6/9/2021	5:15:12 PM	10.64	45.18	0.06	0.12	0.12	10.65	45.20	55.85	4.38
POST_RUN_2_Unit 5_0722.LAB	6/9/2021	5:15:19 PM	10.43	46.40	0.05	0.10	0.10	10.44	46.42	56.86	4.37
POST_RUN_2_Unit 5_0723.LAB	6/9/2021	5:15:27 PM	9.45	47.33	0.03	0.23	0.23	9.45	47.35	56.80	4.37
POST_RUN_2_Unit 5_0724.LAB	6/9/2021	5:15:34 PM	9.34	47.77	0.05	0.71	0.71	9.35	47.80	57.15	4.35
POST_RUN_2_Unit 5_0725.LAB	6/9/2021	5:15:42 PM	8.31	48.01	0.03	0.07	0.07	8.32	48.03	56.34	4.35
POST_RUN_2_Unit 5_0726.LAB	6/9/2021	5:15:49 PM	8.52	48.30	0.04	0.96	0.96	8.52	48.32	56.83	4.37
POST_RUN_2_Unit 5_0727.LAB	6/9/2021	5:15:57 PM	8.53	49.32	0.03	1.18	1.18	8.53	49.34	57.87	4.36
POST_RUN_2_Unit 5_0728.LAB	6/9/2021	5:16:05 PM	7.38	49.23	0.03	0.39	0.39	7.38	49.25	56.63	4.35
POST_RUN_2_Unit 5_0729.LAB	6/9/2021	5:16:12 PM	5.51	28.42	0.03	3.32	3.32	5.51	28.42	33.93	3.84
POST_RUN_2_Unit 5_0730.LAB	6/9/2021	5:16:19 PM	17.79	47.19	0.02	60.39	60.40	17.80	47.20	65.00	2.06
POST_RUN_2_Unit 5_0731.LAB	6/9/2021	5:16:27 PM	33.89	54.48	0.02	102.67	102.69	33.90	54.49	88.39	0.28
POST_RUN_2_Unit 5_0732.LAB	6/9/2021	5:16:34 PM	68.56	29.91	0.02	106.44	106.47	68.58	29.92	98.50	0.00
POST_RUN_2_Unit 5_0733.LAB	6/9/2021	5:16:42 PM	94.64	8.12	0.04	107.58	107.62	94.68	8.12	102.80	-0.01
POST_RUN_2_Unit 5_0734.LAB	6/9/2021	5:16:49 PM	96.89	4.46	0.01	106.37	106.38	96.90	4.46	101.36	-0.04
POST_RUN_2_Unit 5_0735.LAB	6/9/2021	5:16:57 PM	98.13	3.45	0.01	105.99	106.01	98.14	3.45	101.59	-0.04
POST_RUN_2_Unit 5_0736.LAB	6/9/2021	5:17:04 PM	98.20	3.07	-0.02	107.17	107.16	98.18	3.06	101.25	-0.04
POST_RUN_2_Unit 5_0737.LAB	6/9/2021	5:17:12 PM	97.59	2.70	0.02	107.03	107.05	97.61	2.70	100.31	-0.06
POST_RUN_2_Unit 5_0738.LAB	6/9/2021	5:17:19 PM	98.13	2.55	0.01	107.26	107.27	98.14	2.55	100.69	-0.06
POST_RUN_2_Unit 5_0739.LAB	6/9/2021	5:17:27 PM	98.72	2.43	0.00	106.97	106.97	98.72	2.43	101.15	-0.05
POST_RUN_2_Unit 5_0740.LAB	6/9/2021	5:17:34 PM	98.81	2.09	-0.01	107.86	107.86	98.80	2.09	100.89	-0.04
POST_RUN_2_Unit 5_0741.LAB	6/9/2021	5:17:42 PM	92.29	46.24	0.01	88.76	88.78	92.30	46.24	138.55	-0.01
POST_RUN_2_Unit 5_0742.LAB	6/9/2021	5:17:49 PM	18.14	97.23	0.00	5.16	5.16	18.14	97.23	115.37	8.25
POST_RUN_2_Unit 5_0743.LAB	6/9/2021	5:17:57 PM	12.90	99.95	0.01	1.39	1.39	12.90	99.96	112.86	8.70
POST_RUN_2_Unit 5_0744.LAB	6/9/2021	5:18:04 PM	12.10	101.56	0.01	0.17	0.17	12.10	101.57	113.68	8.71
POST_RUN_2_Unit 5_0745.LAB	6/9/2021	5:18:12 PM	11.43	102.44	0.01	1.09	1.09	11.43	102.45	113.89	8.71
POST_RUN_2_Unit 5_0746.LAB	6/9/2021	5:18:20 PM	10.70	102.88	0.03	0.80	0.80	10.71	102.91	113.62	8.70
POST_RUN_2_Unit 5_0747.LAB	6/9/2021	5:18:27 PM	10.50	103.70	-0.01	-0.22	-0.22	10.49	103.68	114.18	8.70
POST_RUN_2_Unit 5_0748.LAB	6/9/2021	5:18:34 PM	9.80	103.87	0.01	0.72	0.72	9.80	103.87	113.67	8.71
POST_RUN_2_Unit 5_0749.LAB	6/9/2021	5:18:42 PM	9.21	103.56	0.02	0.21	0.21	9.21	103.58	112.78	8.71
POST_RUN_2_Unit 5_0750.LAB	6/9/2021	5:18:49 PM	9.52	104.37	0.02	0.91	0.91	9.52	104.39	113.91	8.72
POST_RUN_2_Unit 5_0751.LAB	6/9/2021	5:18:57 PM	7.20	67.03	0.02	0.41	0.41	7.21	67.04	74.24	8.71
POST_RUN_2_Unit 5_0752.LAB	6/9/2021	5:19:04 PM	1.04	4.41	0.01	-0.34	-0.34	1.04	4.41	5.45	1.75
POST_RUN_2_Unit 5_0753.LAB	6/9/2021	5:19:12 PM	0.26	1.09	0.01	0.55	0.55	0.26	1.09	1.36	0.01
POST_RUN_2_Unit 5_0754.LAB	6/9/2021	5:19:19 PM	1.06	0.77	0.00	0.34	0.34	1.06	0.77	1.83	-0.04
POST_RUN_2_Unit 5_0755.LAB	6/9/2021	5:19:27 PM	1.28	0.53	0.00	0.21	0.21	1.28	0.53	1.81	-0.06
POST_RUN_2_Unit 5_0756.LAB	6/9/2021	5:19:35 PM	0.74	0.49	-0.01	0.38	0.38	0.74	0.49	1.23	-0.06
POST_RUN_2_Unit 5_0757.LAB	6/9/2021	5:19:42 PM	0.41	0.30	0.00	1.03	1.03	0.41	0.30	0.71	-0.06
POST_RUN_2_Unit 5_0758.LAB	6/9/2021	5:19:50 PM	0.34	0.30	0.01	-0.37	-0.37	0.34	0.30	0.63	-0.06
POST_RUN_2_Unit 5_0759.LAB	6/9/2021	5:19:57 PM	1.20	0.29	0.00	0.58	0.58	1.20	0.29	1.48	-0.06

Spectrum	Date	Time	NO (350,300(	NO2 (150) 19	H2O% (40) 1(	CO (500) 191	CO ppm Dry	NO Dry	NO2 Dry	NOx Dry	O2 Dry
RUN_3_Unit 5_0760.LAB	6/9/2021	5:21:38 PM	7.04	3.12	4.91	1.96	2.06	7.40	3.28	10.68	16.45
RUN_3_Unit 5_0761.LAB	6/9/2021	5:22:38 PM	7.29	2.61	4.92	2.13	2.24	7.67	2.75	10.42	16.46
RUN_3_Unit 5_0762.LAB	6/9/2021	5:23:38 PM	7.79	2.37	4.87	1.77	1.86	8.19	2.49	10.69	16.48
RUN_3_Unit 5_0763.LAB	6/9/2021	5:24:38 PM	7.60	2.26	4.93	2.33	2.45	8.00	2.38	10.38	16.45
RUN_3_Unit 5_0764.LAB	6/9/2021	5:25:38 PM	7.42	2.24	4.94	2.34	2.46	7.80	2.35	10.15	16.47
RUN_3_Unit 5_0765.LAB	6/9/2021	5:26:38 PM	7.22	2.20	4.92	2.36	2.48	7.60	2.32	9.91	16.47
RUN_3_Unit 5_0766.LAB	6/9/2021	5:27:38 PM	7.52	2.17	4.91	1.69	1.78	7.90	2.28	10.18	16.45
RUN_3_Unit 5_0767.LAB	6/9/2021	5:28:39 PM	7.43	2.25	4.93	2.63	2.77	7.82	2.37	10.18	16.46
RUN_3_Unit 5_0768.LAB	6/9/2021	5:29:39 PM	7.58	2.08	4.90	1.94	2.04	7.97	2.19	10.16	16.47
RUN_3_Unit 5_0769.LAB	6/9/2021	5:30:39 PM	7.69	2.05	4.91	1.91	2.00	8.09	2.16	10.25	16.45
RUN_3_Unit 5_0770.LAB	6/9/2021	5:31:39 PM	7.53	2.18	4.96	1.87	1.97	7.92	2.30	10.22	16.47

RUN_3_Unit 5_0771.LAB	6/9/2021	5:32:39 PM	7.55	2.13	4.95	2.14	2.25	7.95	2.25	10.19	16.48
RUN_3_Unit 5_0772.LAB	6/9/2021	5:33:39 PM	7.79	2.11	4.93	2.27	2.38	8.19	2.22	10.41	16.48
RUN_3_Unit 5_0773.LAB	6/9/2021	5:34:39 PM	7.54	2.12	4.92	2.49	2.62	7.93	2.23	10.16	16.47
RUN_3_Unit 5_0774.LAB	6/9/2021	5:35:39 PM	7.45	2.17	4.95	2.00	2.10	7.83	2.28	10.11	16.47
RUN_3_Unit 5_0775.LAB	6/9/2021	5:36:40 PM	7.74	2.18	4.95	2.18	2.29	8.14	2.30	10.44	16.48
RUN_3_Unit 5_0776.LAB	6/9/2021	5:37:40 PM	7.61	2.06	4.93	2.27	2.39	8.01	2.17	10.18	16.46
RUN_3_Unit 5_0777.LAB	6/9/2021	5:38:39 PM	7.46	2.08	4.90	2.06	2.17	7.85	2.19	10.04	16.45
RUN_3_Unit 5_0778.LAB	6/9/2021	5:39:40 PM	7.60	2.15	4.92	2.63	2.77	7.99	2.26	10.25	16.48
RUN_3_Unit 5_0779.LAB	6/9/2021	5:40:40 PM	7.55	2.04	4.89	2.75	2.89	7.94	2.15	10.09	16.49
RUN_3_Unit 5_0780.LAB	6/9/2021	5:41:40 PM	7.61	2.12	4.91	2.18	2.29	8.00	2.23	10.23	16.47
RUN_3_Unit 5_0781.LAB	6/9/2021	5:42:40 PM	7.73	2.26	4.93	2.51	2.64	8.13	2.38	10.51	16.45
RUN_3_Unit 5_0782.LAB	6/9/2021	5:43:40 PM	7.49	2.16	4.92	2.01	2.11	7.88	2.27	10.15	16.46
RUN_3_Unit 5_0783.LAB	6/9/2021	5:44:40 PM	7.65	2.10	4.92	2.08	2.19	8.05	2.21	10.25	16.48
RUN_3_Unit 5_0784.LAB	6/9/2021	5:45:40 PM	7.43	2.14	4.93	2.52	2.65	7.82	2.26	10.08	16.47
RUN_3_Unit 5_0785.LAB	6/9/2021	5:46:40 PM	7.57	2.13	4.93	2.16	2.28	7.96	2.24	10.20	16.47
RUN_3_Unit 5_0786.LAB	6/9/2021	5:47:40 PM	7.54	2.22	4.94	2.26	2.38	7.94	2.33	10.27	16.48
RUN_3_Unit 5_0787.LAB	6/9/2021	5:48:40 PM	7.54	2.06	4.92	2.16	2.27	7.93	2.16	10.10	16.47
RUN_3_Unit 5_0788.LAB	6/9/2021	5:49:41 PM	7.57	2.04	4.92	1.99	2.10	7.96	2.15	10.11	16.47
RUN_3_Unit 5_0789.LAB	6/9/2021	5:50:40 PM	7.53	2.07	4.93	1.72	1.80	7.92	2.17	10.09	16.46
RUN_3_Unit 5_0790.LAB	6/9/2021	5:51:41 PM	7.68	1.98	4.93	1.74	1.83	8.08	2.09	10.17	16.47
RUN_3_Unit 5_0791.LAB	6/9/2021	5:52:41 PM	7.68	2.01	4.95	2.08	2.18	8.08	2.12	10.20	16.46
RUN_3_Unit 5_0792.LAB	6/9/2021	5:53:41 PM	7.63	2.09	4.93	2.15	2.27	8.03	2.20	10.23	16.48
RUN_3_Unit 5_0793.LAB	6/9/2021	5:54:41 PM	7.62	2.04	4.95	2.35	2.47	8.01	2.15	10.16	16.47
RUN_3_Unit 5_0794.LAB	6/9/2021	5:55:41 PM	7.68	2.14	4.95	2.27	2.39	8.08	2.25	10.32	16.48
RUN_3_Unit 5_0795.LAB	6/9/2021	5:56:41 PM	7.28	2.20	4.94	2.50	2.63	7.66	2.31	9.97	16.47
RUN_3_Unit 5_0796.LAB	6/9/2021	5:57:41 PM	7.74	2.14	4.96	2.05	2.16	8.15	2.25	10.40	16.47
RUN_3_Unit 5_0797.LAB	6/9/2021	5:58:41 PM	7.55	2.16	4.94	2.21	2.32	7.95	2.27	10.22	16.46
RUN_3_Unit 5_0798.LAB	6/9/2021	5:59:41 PM	7.56	2.15	4.92	2.08	2.19	7.95	2.26	10.21	16.47
RUN_3_Unit 5_0799.LAB	6/9/2021	6:00:42 PM	7.73	2.11	4.91	2.62	2.76	8.13	2.22	10.35	16.47
RUN_3_Unit 5_0800.LAB	6/9/2021	6:01:41 PM	7.84	2.13	4.91	2.29	2.41	8.24	2.24	10.48	16.49
RUN_3_Unit 5_0801.LAB	6/9/2021	6:02:41 PM	7.38	2.04	4.93	2.22	2.34	7.77	2.15	9.91	16.50
RUN_3_Unit 5_0802.LAB	6/9/2021	6:03:41 PM	7.55	2.09	4.92	2.63	2.77	7.95	2.20	10.15	16.47
RUN_3_Unit 5_0803.LAB	6/9/2021	6:04:42 PM	7.68	2.10	4.92	2.65	2.79	8.08	2.21	10.29	16.46
RUN_3_Unit 5_0804.LAB	6/9/2021	6:05:42 PM	7.57	2.15	4.93	2.15	2.26	7.96	2.27	10.22	16.46
RUN_3_Unit 5_0805.LAB	6/9/2021	6:06:42 PM	7.41	2.11	4.92	1.96	2.06	7.80	2.22	10.02	16.47
RUN_3_Unit 5_0806.LAB	6/9/2021	6:07:42 PM	7.76	2.14	4.92	1.82	1.91	8.17	2.25	10.41	16.49
RUN_3_Unit 5_0807.LAB	6/9/2021	6:08:42 PM	7.70	2.14	4.92	2.18	2.29	8.10	2.25	10.35	16.48
RUN_3_Unit 5_0808.LAB	6/9/2021	6:09:42 PM	7.52	2.10	4.94	1.77	1.87	7.91	2.21	10.12	16.46
RUN_3_Unit 5_0809.LAB	6/9/2021	6:10:42 PM	7.57	2.18	4.92	2.06	2.17	7.97	2.30	10.26	16.47
RUN_3_Unit 5_0810.LAB	6/9/2021	6:11:42 PM	7.72	2.19	4.93	2.65	2.78	8.12	2.30	10.43	16.47
RUN_3_Unit 5_0811.LAB	6/9/2021	6:12:42 PM	7.40	2.13	4.92	2.15	2.26	7.78	2.24	10.02	16.47
RUN_3_Unit 5_0812.LAB	6/9/2021	6:13:43 PM	7.59	2.16	4.91	2.25	2.36	7.98	2.27	10.25	16.49
RUN_3_Unit 5_0813.LAB	6/9/2021	6:14:43 PM	7.62	2.06	4.92	2.45	2.58	8.01	2.16	10.17	16.47
RUN_3_Unit 5_0814.LAB	6/9/2021	6:15:42 PM	7.65	2.17	4.92	2.62	2.75	8.04	2.28	10.33	16.48
RUN_3_Unit 5_0815.LAB	6/9/2021	6:16:43 PM	7.65	2.18	4.94	1.96	2.06	8.05	2.29	10.33	16.48
RUN_3_Unit 5_0816.LAB	6/9/2021	6:17:43 PM	7.62	2.11	4.94	1.79	1.89	8.02	2.22	10.24	16.48
RUN_3_Unit 5_0817.LAB	6/9/2021	6:18:43 PM	7.51	2.07	4.94	2.06	2.17	7.90	2.18	10.08	16.47
RUN_3_Unit 5_0818.LAB	6/9/2021	6:19:43 PM	7.92	2.17	4.92	1.87	1.97	8.33	2.28	10.61	16.48
RUN_3_Unit 5_0819.LAB	6/9/2021	6:20:43 PM	7.66	2.10	4.91	1.91	2.01	8.05	2.21	10.26	16.48
RUN_3_Unit 5_0820.LAB	6/9/2021	6:21:43 PM	7.67	2.17	4.93	2.25	2.37	8.07	2.29	10.35	16.47
RUN_3_Unit 5_0821.LAB	6/9/2021	6:22:43 PM	7.53	2.05	4.93	1.81	1.91	7.92	2.16	10.08	16.48
RUN_3_Unit 5_0822.LAB	6/9/2021	6:23:43 PM	7.67	2.13	4.92	1.93	2.03	8.06	2.24	10.30	16.47

Spectrum	Date	Time	NO (350,300	NO2 (150) 19	H2O% (40) 1	CO (500) 191	CO ppm Dry	NO Dry	NO2 Dry	NOx Dry	O2 Dry
POST_RUN_3_Unit 5_0823.LAB	6/9/2021	6:24:34 PM	17.08	94.17	0.16	0.42	0.42	17.10	94.31	111.42	8.53
POST_RUN_3_Unit 5_0824.LAB	6/9/2021	6:24:41 PM	15.33	97.59	0.08	0.87	0.87	15.34	97.66	113.01	8.74
POST_RUN_3_Unit 5_0825.LAB	6/9/2021	6:24:49 PM	14.29	98.86	0.06	0.87	0.87	14.30	98.91	113.21	8.72
POST_RUN_3_Unit 5_0826.LAB	6/9/2021	6:24:56 PM	12.88	99.79	0.04	0.43	0.43	12.89	99.83	112.72	8.71
POST_RUN_3_Unit 5_0827.LAB	6/9/2021	6:25:04 PM	12.16	100.36	0.04	0.49	0.49	12.16	100.40	112.55	8.71
POST_RUN_3_Unit 5_0828.LAB	6/9/2021	6:25:11 PM	11.63	101.79	0.04	0.02	0.02	11.63	101.83	113.46	8.70
POST_RUN_3_Unit 5_0829.LAB	6/9/2021	6:25:19 PM	11.49	101.94	0.02	0.36	0.36	11.49	101.96	113.45	8.70
POST_RUN_3_Unit 5_0830.LAB	6/9/2021	6:25:26 PM	10.80	102.97	0.06	0.78	0.79	10.81	103.03	113.84	8.70
POST_RUN_3_Unit 5_0831.LAB	6/9/2021	6:25:34 PM	10.92	102.63	0.02	0.91	0.91	10.92	102.65	113.57	8.70
POST_RUN_3_Unit 5_0832.LAB	6/9/2021	6:25:41 PM	8.47	75.61	0.02	1.28	1.28	8.48	75.62	84.10	8.70
POST_RUN_3_Unit 5_0833.LAB	6/9/2021	6:25:49 PM	4.52	21.97	0.03	3.56	3.56	4.52	21.98	26.50	2.99
POST_RUN_3_Unit 5_0834.LAB	6/9/2021	6:25:56 PM	17.74	49.30	0.03	64.99	65.01	17.75	49.32	67.07	1.93

POST_RUN_3_Unit 5_0835.LAB	6/9/2021	6:26:04 PM	32.87	54.90	0.03	103.04	103.06	32.88	54.92	87.80	0.21
POST_RUN_3_Unit 5_0836.LAB	6/9/2021	6:26:11 PM	69.28	29.26	0.01	105.36	105.37	69.29	29.26	98.55	0.01
POST_RUN_3_Unit 5_0837.LAB	6/9/2021	6:26:19 PM	92.90	8.43	0.01	106.77	106.78	92.90	8.43	101.34	-0.02
POST_RUN_3_Unit 5_0838.LAB	6/9/2021	6:26:26 PM	97.07	4.96	0.01	106.76	106.77	97.08	4.96	102.05	-0.04
POST_RUN_3_Unit 5_0839.LAB	6/9/2021	6:26:34 PM	97.52	3.81	0.02	107.75	107.77	97.53	3.81	101.35	-0.04
POST_RUN_3_Unit 5_0840.LAB	6/9/2021	6:26:42 PM	97.78	3.48	0.04	106.87	106.91	97.82	3.48	101.30	-0.04
POST_RUN_3_Unit 5_0841.LAB	6/9/2021	6:26:49 PM	97.68	3.02	0.01	107.62	107.63	97.69	3.02	100.71	-0.05
POST_RUN_3_Unit 5_0842.LAB	6/9/2021	6:26:57 PM	97.65	2.84	0.02	107.38	107.40	97.67	2.85	100.52	-0.06
POST_RUN_3_Unit 5_0843.LAB	6/9/2021	6:27:10 PM	99.55	2.53	0.01	108.34	108.35	99.56	2.53	102.09	-0.04
POST_RUN_3_Unit 5_0844.LAB	6/9/2021	6:27:17 PM	97.43	13.73	-0.01	103.95	103.94	97.43	13.73	111.16	-0.04
POST_RUN_3_Unit 5_0845.LAB	6/9/2021	6:27:25 PM	18.58	45.74	0.04	10.75	10.75	18.59	45.76	64.35	3.23
POST_RUN_3_Unit 5_0846.LAB	6/9/2021	6:27:32 PM	9.26	50.26	0.02	0.38	0.38	9.26	50.27	59.53	4.31
POST_RUN_3_Unit 5_0847.LAB	6/9/2021	6:27:40 PM	8.20	51.33	0.02	1.12	1.12	8.20	51.34	59.54	4.37
POST_RUN_3_Unit 5_0848.LAB	6/9/2021	6:27:47 PM	8.17	51.88	0.03	1.57	1.57	8.17	51.90	60.07	4.37
POST_RUN_3_Unit 5_0849.LAB	6/9/2021	6:27:55 PM	7.42	51.78	0.01	0.23	0.23	7.42	51.79	59.21	4.38
POST_RUN_3_Unit 5_0850.LAB	6/9/2021	6:28:02 PM	6.82	52.86	0.00	0.57	0.57	6.82	52.86	59.68	4.36
POST_RUN_3_Unit 5_0851.LAB	6/9/2021	6:28:10 PM	6.69	53.05	-0.01	0.47	0.47	6.69	53.05	59.73	4.38
POST_RUN_3_Unit 5_0852.LAB	6/9/2021	6:28:17 PM	6.42	53.36	0.01	0.45	0.45	6.42	53.36	59.79	4.37
POST_RUN_3_Unit 5_0853.LAB	6/9/2021	6:28:25 PM	5.88	48.67	0.01	1.30	1.30	5.88	48.67	54.55	4.32
POST_RUN_3_Unit 5_0854.LAB	6/9/2021	6:28:32 PM	5.66	47.26	0.01	0.00	0.00	5.66	47.26	52.92	3.97
POST_RUN_3_Unit 5_0855.LAB	6/9/2021	6:28:40 PM	6.61	47.63	0.03	-0.13	-0.13	6.61	47.64	54.25	3.98
POST_RUN_3_Unit 5_0856.LAB	6/9/2021	6:28:48 PM	5.72	47.64	0.02	0.69	0.69	5.72	47.65	53.37	4.00
POST_RUN_3_Unit 5_0857.LAB	6/9/2021	6:28:55 PM	5.40	47.53	0.01	0.89	0.89	5.40	47.53	52.93	4.01
POST_RUN_3_Unit 5_0858.LAB	6/9/2021	6:29:03 PM	5.35	47.89	0.03	0.57	0.57	5.35	47.90	53.26	3.99
POST_RUN_3_Unit 5_0859.LAB	6/9/2021	6:29:10 PM	5.19	48.18	0.01	0.81	0.81	5.20	48.18	53.38	3.99
POST_RUN_3_Unit 5_0860.LAB	6/9/2021	6:29:18 PM	5.57	48.32	0.01	0.73	0.73	5.57	48.32	53.89	4.01
POST_RUN_3_Unit 5_0861.LAB	6/9/2021	6:29:25 PM	2.51	19.50	0.03	0.45	0.45	2.51	19.50	22.01	3.79
POST_RUN_3_Unit 5_0862.LAB	6/9/2021	6:29:32 PM	0.30	1.26	-0.01	-0.33	-0.33	0.30	1.26	1.57	0.20
POST_RUN_3_Unit 5_0863.LAB	6/9/2021	6:29:40 PM	0.53	0.52	0.00	0.61	0.61	0.53	0.52	1.05	-0.04
POST_RUN_3_Unit 5_0864.LAB	6/9/2021	6:29:48 PM	0.10	0.43	0.00	-0.34	-0.34	0.10	0.43	0.53	-0.05
POST_RUN_3_Unit 5_0865.LAB	6/9/2021	6:29:55 PM	1.17	0.33	-0.01	0.05	0.05	1.17	0.33	1.50	-0.07
POST_RUN_3_Unit 5_0866.LAB	6/9/2021	6:30:03 PM	0.00	0.35	0.00	-0.20	-0.20	0.00	0.35	0.35	-0.05
POST_RUN_3_Unit 5_0867.LAB	6/9/2021	6:30:10 PM	-0.10	0.30	0.01	-0.59	-0.59	-0.10	0.30	0.21	-0.06
POST_RUN_3_Unit 5_0868.LAB	6/9/2021	6:30:17 PM	0.33	0.19	0.00	-0.20	-0.20	0.33	0.19	0.52	-0.06

Section 8

Map(s)

A map such as a 7.5 minute topographic quadrangle showing the exact location of the source. The map shall also include the following:

The UTM or Longitudinal coordinate system on both axes	An indicator showing which direction is north
A minimum radius around the plant of 0.8km (0.5 miles)	Access and haul roads
Topographic features of the area	Facility property boundaries
The name of the map	The area which will be restricted to public access
A graphical scale	

A topographic map is attached.

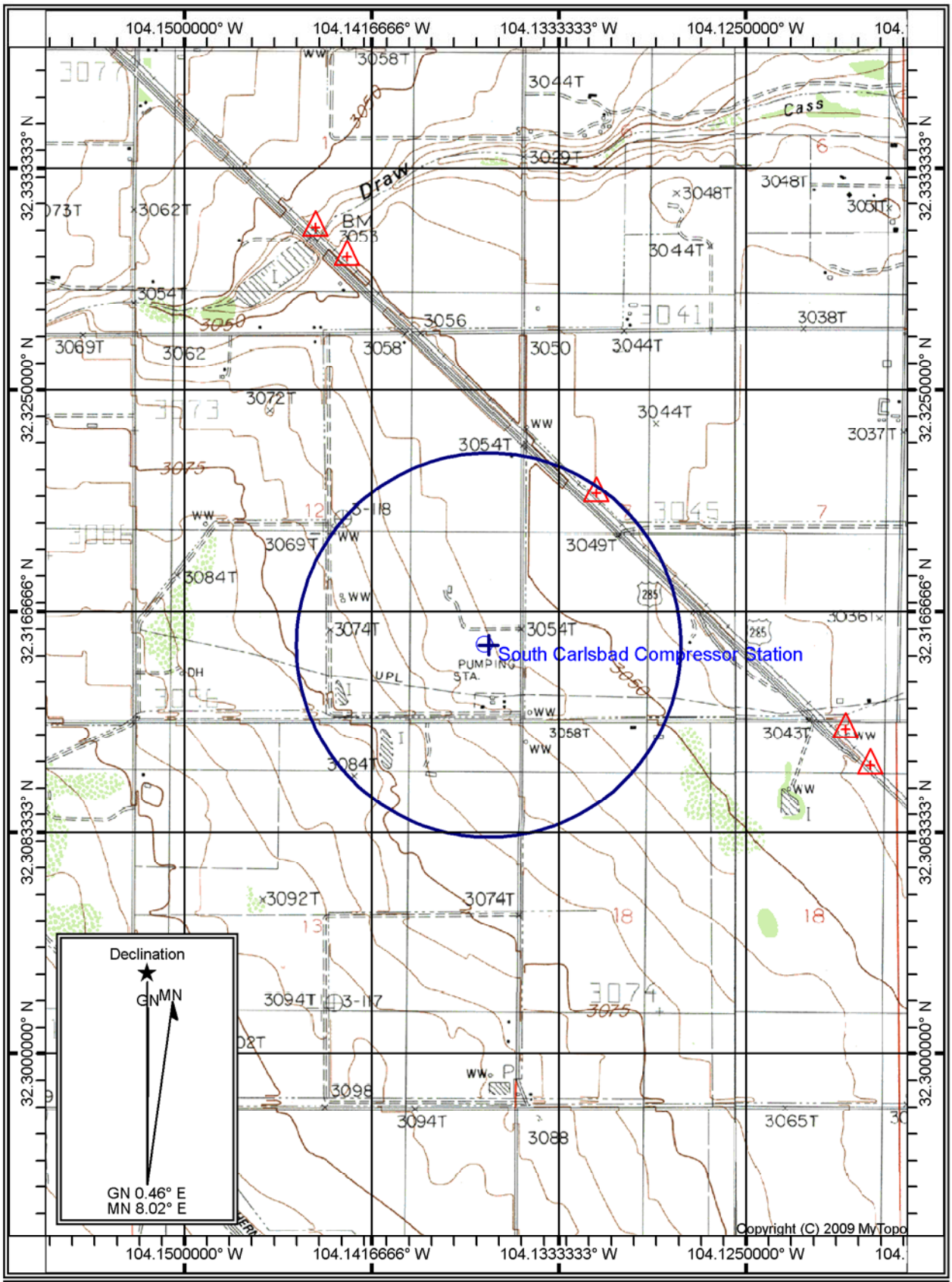

Map Name: OTIS
Print Date: 07/15/20
Scale: 1 inch = 2,000 ft.
Map Center: 032.3155315° N 104.1370278° W

Horizontal Datum: WGS84

Enterprise Products: South Carlsbad Compressor Station

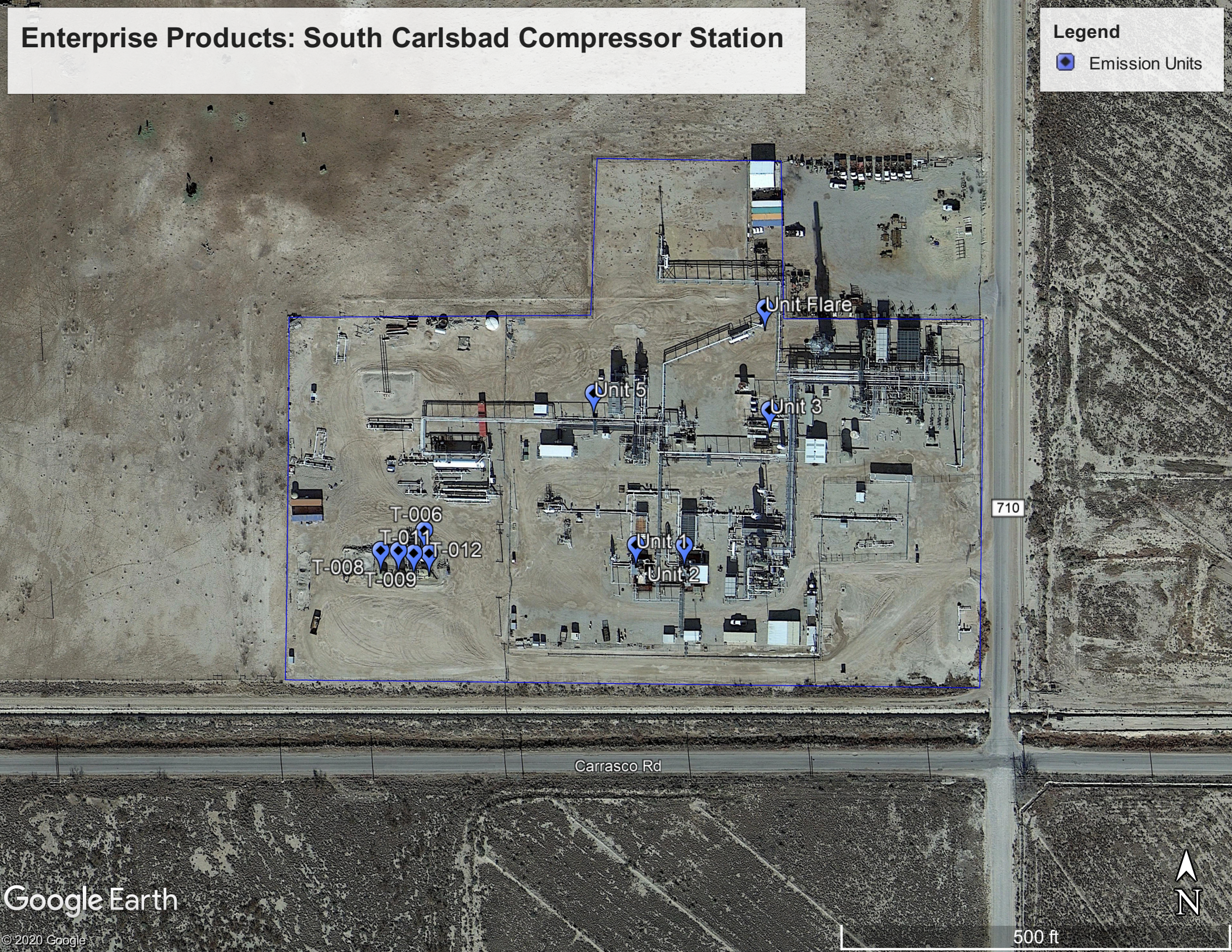

Section 10

Written Description of the Routine Operations of the Facility

---

A written description of the routine operations of the facility. Include a description of how each piece of equipment will be operated, how controls will be used, and the fate of both the products and waste generated. For modifications and/or revisions, explain how the changes will affect the existing process. In a separate paragraph describe the major process bottlenecks that limit production. The purpose of this description is to provide sufficient information about plant operations for the permit writer to determine appropriate emission sources.

The facility is a natural gas compressor station or transport of natural gas. Gas enters the facility through a separator and is compressed by three gas turbine-driven compressors (Units 1, 2, & 5). The gas is then routed through a dehydrator, Unit 3, where water is removed. The water from the dehydrator regenerator, which contains some hydrocarbons, is routed through a condenser to recover salable hydrocarbons, which are routed to T-006. The non-condensable gas from the condenser are routed to a packaged burner system for use as burner fuel in the dehydrator reboiler (commonly called a "BTEX Buster"). During periods when the reboiler is not operating, the non-condensable gas stream is routed to the stack of the reboiler where it is ignited by a glow plug and burned. The gas stream from the flash tank is send to the fuels system and is not a source of emissions. After inlet compression, gas is sent directly to a chiller and cold separator, where liquids (primarily water) condense and are removed from the stream. The dry gas stream then goes to a pipeline for transport.

Liquids from the inlet separator are routed to a 3-phase separator, where water, hydrocarbon liquids, and gas are separated. The gas stream from the 3-phase separator is used as turbine fuel (along with makeup fuel if needed from the discharge residue gas stream and/or the gas stream from the condensate stabilizer). The water goes to tanks for storage. The hydrocarbon liquids from the 3-phase separator and from the cold separator go to the condensate stabilizer where the water and hydrocarbons are further separated. Liquid hydrocarbons and water are stored in separate tanks, and hydrocarbon gases are added to the turbine fuel stream.

In the event of an emergency, the gas streams from the 3-phase separator and from the condensate stabilizer may be routed to the flare. During non-routine conditions such as when gas must be released from portions of the facility for maintenance or in the event of an emergency, some VOCs will be directed to the flare. Gas from the 3-phase separator and stabilizer overheads will be directed to the flare in the event of a plant shutdown. Additionally, during an emergency shutdown, pressure vessels or the gas contents of the refrigeration system may be released to the flare; however, the quantity of gas in these vessels or systems is less than the assumed maximum gas volume from the 3-phase separator and stabilizer overheads.

Section 11
Source Determination

Source submitting under 20.2.70, 20.2.72, 20.2.73, and 20.2.74 NMAC

Sources applying for a construction permit, PSD permit, or operating permit shall evaluate surrounding and/or associated sources (including those sources directly connected to this source for business reasons) and complete this section. Responses to the following questions shall be consistent with the Air Quality Bureau's permitting guidance, Single Source Determination Guidance, which may be found on the Applications Page in the Permitting Section of the Air Quality Bureau website.

Typically, buildings, structures, installations, or facilities that have the same SIC code, that are under common ownership or control, and that are contiguous or adjacent constitute a single stationary source for 20.2.70, 20.2.72, 20.2.73, and 20.2.74 NMAC applicability purposes. Submission of your analysis of these factors in support of the responses below is optional, unless requested by NMED.

A. Identify the emission sources evaluated in this section (list and describe)**: Refer to Table 2-A of this application for a complete list of sources.**

B. Apply the 3 criteria for determining a single source:

SIC Code: Surrounding or associated sources belong to the same 2-digit industrial grouping (2-digit SIC code) as this facility, OR surrounding or associated sources that belong to different 2-digit SIC codes are support facilities for this source.

☑ **Yes** ☐ **No**

Common Ownership or Control: Surrounding or associated sources are under common ownership or control as this source.

☑ **Yes** ☐ **No**

Contiguous or Adjacent: Surrounding or associated sources are contiguous or adjacent with this source.

☑ **Yes** ☐ **No**

C. Make a determination:

☑ The source, as described in this application, constitutes the entire source for 20.2.70, 20.2.72, 20.2.73, or 20.2.74 NMAC applicability purposes. If in "A" above you evaluated only the source that is the subject of this application, all "**YES**" boxes should be checked. If in "A" above you evaluated other sources as well, you must check **AT LEAST ONE** of the boxes "**NO**" to conclude that the source, as described in the application, is the entire source for 20.2.70, 20.2.72, 20.2.73, and 20.2.74 NMAC applicability purposes.

☐ The source, as described in this application, **does not** constitute the entire source for 20.2.70, 20.2.72, 20.2.73, or 20.2.74 NMAC applicability purposes (A permit may be issued for a portion of a source). The entire source consists of the following facilities or emissions sources (list and describe):

Section 13

Determination of State & Federal Air Quality Regulations

This section lists each state and federal air quality regulation that may apply to your facility and/or equipment that are stationary sources of regulated air pollutants.

Not all state and federal air quality regulations are included in this list. Go to the Code of Federal Regulations (CFR) or to the Air Quality Bureau's regulation page to see the full set of air quality regulations.

Required Information for Specific Equipment:
For regulations that apply to specific source types, in the 'Justification' column **provide any information needed to determine if the regulation does or does not apply**. **For example**, to determine if emissions standards at 40 CFR 60, Subpart IIII apply to your three identical stationary engines, we need to know the construction date as defined in that regulation; the manufacturer date; the date of reconstruction or modification, if any; if they are or are not fire pump engines; if they are or are not emergency engines as defined in that regulation; their site ratings; and the cylinder displacement.

Required Information for Regulations that Apply to the Entire Facility:
See instructions in the 'Justification' column for the information that is needed to determine if an 'Entire Facility' type of regulation applies (e.g. 20.2.70 or 20.2.73 NMAC).

Regulatory Citations for Regulations That Do Not, but Could Apply:
If there is a state or federal air quality regulation that does not apply, but you have a piece of equipment in a source category for which a regulation has been promulgated, you must **provide the low level regulatory citation showing why your piece of equipment is not subject to or exempt from the regulation. For example** if you have a stationary internal combustion engine that is not subject to 40 CFR 63, Subpart ZZZZ because it is an existing 2 stroke lean burn stationary RICE with a site rating of more than 500 brake HP located at a major source of HAP emissions, your citation would be 40 CFR 63.6590(b)(3)(i). **We don't want a discussion of every non-applicable regulation, but if it is possible a regulation could apply, explain why it does not. For example,** if your facility is a power plant, you do not need to include a citation to show that 40 CFR 60, Subpart OOO does not apply to your non-existent rock crusher.

Regulatory Citations for Emission Standards:
For each unit that is subject to an emission standard in a source specific regulation, such as 40 CFR 60, Subpart OOO or 40 CFR 63, Subpart HH, include the low level regulatory citation of that emission standard. Emission standards can be numerical emission limits, work practice standards, or other requirements such as maintenance. **Here are examples:** a glycol dehydrator is subject to the general standards at 63.764C(1)(i) through (iii); an engine is subject to 63.6601, Tables 2a and 2b; a crusher is subject to 60.672(b), Table 3 and all transfer points are subject to 60.672(e)(1)

Federally Enforceable Conditions:
All federal regulations are federally enforceable. All Air Quality Bureau State regulations are federally enforceable except for the following: affirmative defense portions at 20.2.7.6.B, 20.2.7.110(B)(15), 20.2.7.11 through 20.2.7.113, 20.2.7.115, and 20.2.7.116; 20.2.37; 20.2.42; 20.2.43; 20.2.62; 20.2.63; 20.2.86; 20.2.89; and 20.2.90 NMAC. Federally enforceable means that EPA can enforce the regulation as well as the Air Quality Bureau and federally enforceable regulations can count toward determining a facility's potential to emit (PTE) for the Title V, PSD, and nonattainment permit regulations.

INCLUDE ANY OTHER INFORMATION NEEDED TO COMPLETE AN APPLICABILITY DETERMINATION OR THAT IS RELEVENT TO YOUR FACILITY'S NOTICE OF INTENT OR PERMIT.

EPA Applicability Determination Index for 40 CFR 60, 61, 63, etc: http://cfpub.epa.gov/adi/

Table for STATE REGULATIONS:

STATE REGU-LATIONS CITATION	Title	Applies? Enter Yes or No	Unit(s) or Facility	JUSTIFICATION: (You may delete instructions or statements that do not apply in the justification column to shorten the document.)
20.2.1 NMAC	General Provisions	Yes	Facility	General Provisions apply to Notice of Intent, Construction, and Title V permit applications.
20.2.3 NMAC	Ambient Air Quality Standards NMAAQS	Yes	Facility	20.2.3 NMAC is a SIP approved regulation that limits the maximum allowable concentration of Total Suspended Particulates, Sulfur Compounds, Carbon Monoxide and Nitrogen Dioxide. The facility meets maximum allowable concentrations of TSP, SO_2, H_2S, NO_x, and CO under this regulation.
20.2.7 NMAC	Excess Emissions	Yes	Facility	This regulation establishes requirements for the facility if operations at the facility result in any excess emissions. The owner or operator will operate the source at the facility having an excess emission, to the extent practicable, including associated air pollution control equipment, in a manner consistent with good air pollution control practices for minimizing emissions. The facility will also notify the NMED of any excess emission per 20.2.7.110 NMAC.
20.2.23 NMAC	Fugitive Dust Control	No	N/A	This regulation does not apply as the facility has no need to fugitive dust control measures as the facility does not generate enough particulate matter.
20.2.33 NMAC	Gas Burning Equipment - Nitrogen Dioxide	No	N/A	This facility does not have gas burning equipment (external combustion emission sources, such as gas fired boilers and heaters) having a heat input of greater than 1,000,000 million British Thermal Units per year per unit. The facility is not subject to this regulation and does not have emission sources that meet the applicability requirements under 20.2.33.108 NMAC.
20.2.34 NMAC	Oil Burning Equipment: NO_2	No	N/A	This facility does not have oil burning equipment (external combustion emission sources, such as oil fired boilers and heaters) having a heat input of greater than 1,000,000 million British Thermal Units per year per unit. The facility is not subject to this regulation and does not have emission sources that meet the applicability requirements under 20.2.34.108 NMAC.
20.2.35 NMAC	Natural Gas Processing Plant – Sulfur	Yes	Facility	This regulation establishes sulfur emission standards for natural gas processing plants. This facility is a new natural gas processing plant as defined in 20.2.35.7.B NMAC. The facility does not meet the minimum sulfur emission requirement of an average of 5 tpy [20.2.35.110.A NMAC]. This facility is subject to the stack height, recordkeeping, and reporting requirements of this regulation [20.2.35.111-112 NMAC].
20.2.37 and 20.2.36 NMAC	Petroleum Processing Facilities and Petroleum Refineries	N/A	N/A	**These regulations were repealed by the Environmental Improvement Board. If you had equipment subject to 20.2.37 NMAC before the repeal, your combustion emission sources are now subject to 20.2.61 NMAC.**
20.2.38 NMAC	Hydrocarbon Storage Facility	No	N/A	This facility is not a petroleum production facility as defined in 20.2.38.7.D NMAC. Natural gas enters this facility via pipeline and inlet separator. Condensate stored at this facility comes from the pipeline, not a well. Accordingly, the tanks at this facility do not meet the definition of a tank battery as defined in 20.2.38.7.E.
20.2.39 NMAC	Sulfur Recovery Plant - Sulfur	No	N/A	This regulation establishes sulfur emission standards for sulfur recovery plants that are not part of petroleum or natural gas processing facilities. This regulation does not apply to the facility because this facility does not have a sulfur recovery plant.
20.2.61.109 NMAC	Smoke & Visible Emissions	Yes	1, 2, 3b, 5, Flare	This regulation establishes controls on smoke and visible emissions from certain sources, including stationary combustion equipment. This regulation is applicable to the following stationary combustion units: 1, 2, 3b, 5, and Flare.
20.2.70 NMAC	Operating Permits	Yes	Facility	This regulation establishes requirements for obtaining an operating permit. This facility is a major source with respect to Title V and is permitted under P-130-R3M1. The facility will comply with all operating permit conditions as applicable."
20.2.71 NMAC	Operating Permit Fees	Yes	Facility	This regulation establishes a schedule of operating permit emission fees. The facility is subject to 20.2.70 NMAC and is therefore subject to requirements of this regulation.
20.2.72 NMAC	Construction Permits	Yes	Facility	This regulation establishes the requirements for obtaining a construction permit. This facility is subject to the requirements of this subpart and complies with NSR Permit 0220-M11.

STATE REGU-LATIONS CITATION	Title	Applies? Enter Yes or No	Unit(s) or Facility	JUSTIFICATION: (You may delete instructions or statements that do not apply in the justification column to shorten the document.)
20.2.73 NMAC	NOI & Emissions Inventory Requirements	Yes	Facility	This regulation establishes emission inventory requirements. The facility meets the applicability requirements of 20.2.73.300 NMAC. The facility will meet all applicable reporting requirements under 20.2.73.300.B.1 NMAC.
20.2.74 NMAC	Permits – Prevention of Significant Deterioration (PSD)	No	Facility	This regulation establishes requirements for obtaining a prevention of significant deterioration permit. This facility is not a major source with respect to PSD and is therefore not subject to 20.2.74 NMAC.
20.2.75 NMAC	Construction Permit Fees	Yes	Facility	This regulation establishes a schedule of operating permit emission fees. This facility is subject to 20.2.72 NMAC and in turn subject to 20.2.75 NMAC. The facility is exempt from annual fees under this part (20.2.75.11.E NMAC) as it is subject to fees pursuant to 20.2.71 NMAC.
20.2.77 NMAC	New Source Performance	Yes	F-001, 2, & 5	This regulation establishes state authority to implement new source performance standards (NSPS) for stationary sources, as amended through January 15, 2017. F-001 applies as it is subject to NSPS OOOOa and units 2 and 5 are subject to NSPS GG.
20.2.78 NMAC	Emission Standards for HAPS	No	N/A	regulation establishes state authority to implement emission standards for hazardous air pollutants subject to 40 CFR Part 61. This facility does not emit hazardous air pollutants which are subject to the requirements of 40 CFR Part 61 and is therefore not subject to this regulation.
20.2.79 NMAC	Permits – Nonattainment Areas	No	Facility	This regulation establishes the requirements for obtaining a nonattainment area permit. The facility is not located in a non-attainment area and therefore is not subject to this regulation.
20.2.80 NMAC	Stack Heights	No	N/A	This regulation establishes requirements for the evaluation of stack heights and other dispersion techniques. This regulation does not apply, as all stacks at the facility will follow good engineering practice.
20.2.82 NMAC	MACT Standards for source categories of HAPS	Yes	3a	This glycol dehydrator at this facility is Subject to the requirements of 40 CFR 63 Subpart HH. Therefore this regulation applies.

Table for FEDERAL REGULATIONS:

FEDERAL REGU-LATIONS CITATION	Title	Applies? Enter Yes or No	Unit(s) or Facility	JUSTIFICATION:
40 CFR 50	NAAQS	Yes	Facility	This regulation defines national ambient air quality standards. The facility meets all applicable national ambient air quality standards for NOx, CO, SO2, H2S, PM10, and PM2.5 under this regulation.
NSPS 40 CFR 60, Subpart A	General Provisions	Yes	2, 5, F-001	This regulation defines general provisions for relevant standards that have been set under this part. The facility is subject to this regulation because the following subparts apply: - Units 2 & 5 are subject to NSPS GG. - Unit F-001 is subject to the leak detection requirements of NSPS OOOOa.
NSPS 40 CFR60.40a, Subpart Da	Subpart Da, Performance Standards for **Electric Utility Steam Generating Units**	No	N/A	This regulation establishes standards of performance for fossil-fuel-fired stream generators. This regulation does not apply as the facility does not have any fossil-fuel-fired steam generating units with a heat input rate of 250 MMBtu/hr [60.40(a)(1)].
NSPS 40 CFR60.40b Subpart Db	**Electric Utility Steam Generating Units**	No	N/A	This regulation establishes standards of performance for electric utility steam generating units. This regulation does not apply because the facility does not operate any electric utility steam generating units.
40 CFR 60.40c, Subpart Dc	Standards of Performance for Small Industrial-Commercial-Institutional Steam Generating Units	No	N/A	This regulation does not apply as the facility does not have any steam generating units.
NSPS 40 CFR 60, Subpart Ka	Standards of Performance for **Storage Vessels for Petroleum Liquids** for which Construction, Reconstruction, or Modification Commenced After May 18, 1978, and **Prior** to July 23, 1984	No	N/A	This regulation establishes performance standards for storage vessels for petroleum liquids for which construction, reconstruction, or modification commenced after May 18, 1978, and prior to July 23, 1984. The tanks at the facility, which are regulated emission sources, are 300 bbl (12,600 gallons) and 210 bbl (8,820 gallons). The capacities of the tanks at the facility are less than 40,000 gallons and are not subject to this regulation. [40 CFR Part 60.110a(a)]

NSPS 40 CFR 60, Subpart Kb	Standards of Performance for Volatile Organic Liquid Storage Vessels (Including Petroleum Liquid Storage Vessels) for Which Construction, Reconstruction, or Modification Commenced After July 23, 1984	No	N/A	This regulation establishes performance standards for volatile organic liquid storage vessels (including petroleum liquid storage vessels) for which construction, reconstruction, or modification commenced after July 23, 1984. This facility does not have any storage vessels with a capacity greater than or equal to 75 cubic meters that were constructed, reconstructed or modified after July 23, 1984. This regulation is not applicable."
NSPS 40 CFR 60.330 Subpart GG	**Stationary Gas Turbines**	Yes	2 & 5	This regulation establishes standards of performance for stationary gas turbines with a heat input of 10 MMBtu/hr or greater. Units 2 & 5 each have heat inputs of 35.3 MMBtu/hour and commenced construction after October 3, 1977. Accordingly, these units are subject to this regulation [60.330(b)]. Unit 1 is not subject to these subparts because it was manufactured in 1973, prior to the applicability date of October 3, 1977.
NSPS 40 CFR 60, Subpart KKK	Leaks of VOC from **Onshore Gas Plants**	No	N/A	This regulation defines standards of performance for equipment leaks of VOC emissions from onshore natural gas processing plants for which construction, reconstruction, or modification commenced after January 20, 1984, and on or before August 23, 2011. The facility is not subject to this regulation because the operations performed at this site are no longer consistent to those carried out at an onshore natural gas processing plant. The removal of the dew point plant ensured that the facility is no longer subject to this regulation.
NSPS 40 CFR Part 60 Subpart LLL	Standards of Performance for **Onshore Natural Gas Processing**: SO_2 Emissions	No	N/A	This regulation establishes standards of performance for SO_2 emissions from onshore natural gas processing for which construction, reconstruction, or modification of the amine sweetening unit commenced after January 20, 1984 and on or before August 23, 2011. This regulation is not applicable as the amine sweetening unit (Unit 4a) commenced construction after August 23, 2011.
NSPS 40 CFR Part 60 Subpart OOOO	Standards of Performance for Crude Oil and Natural Gas Production, Transmission, and Distribution for which construction, modification or reconstruction commenced after August 23, 2011 and before September 18, 2015	No	N/A	This regulation establishes standards of performance for crude oil and natural gas production, transmission, and distribution. Because the dew point plant is being removed this change the facility to be a compressor station; therefore, this regulation does not apply. Facility fugitive emissions are not subject to the leak detection requirements of this regulation. Compressors associated with units 1, 2, 5, and unit EC-1 were manufactured prior to August 23, 2011. Relocation does not constitute a modification; therefore, compressors associated with units 1,2,5 and unit EC-1 are not subject to this regulation. Unit T- 006 is an existing exempt tank. This unit was constructed prior to 8/23/2011 and is not subject to this regulation T-008 through T-012 are also constructed prior to 8/23/2011 and are not subject to this regulation.
NSPS 40 CFR Part 60 Subpart OOOOa	Standards of Performance for Crude Oil and Natural Gas Facilities for which Construction, Modification or Reconstruction Commenced After September 18, 2015	F-001	Yes	**This regulation establishes standards of performance for crude oil and natural gas production, transmission and distribution. As this facility is a compressor station, fugitive emissions (F-001) are subject to the leak detection requirements of this regulation. Compressors associated with units 1,2,5 and unit EC-1 were manufactured prior to August 23, 2011 and prior to September 18, 2015. Relocation does not constitute a modification; therefore, compressors associated with units 1,2,5 and unit EC-1 are not subject to this regulation. Unit T- 006 is an existing exempt tank. This unit was constructed prior to 8/23/2011 and is not subject to this regulation. Facility wide LDAR monitoring will be conducted by using optical gas imaging for the compressor station. T-008 through T-012 are also constructed prior to 8/23/2011 prior to 9/18/2015 and are not subject to this regulation.**
NSPS 40 CFR 60 Subpart IIII	Standards of performance for Stationary	No	N/A	**This regulation establishes standards of performance for stationary compression ignition internal combustion engines. This rule applies to IC engines (diesel engines) that commenced construction after July 11, 2005.**

	Compression Ignition Internal Combustion Engines			**This regulation does not apply, as there are no stationary compression ignition internal combustion engines at this facility.**
NSPS 40 CFR Part 60 Subpart JJJJ	Standards of Performance for Stationary Spark Ignition Internal Combustion Engines	No	N/A	This regulation establishes standards of performance for stationary spark ignition combustion engines. However, the unit is a portable non-road engine that will be at the facility for less than 12 months. In accordance with 40 CFR 60.4230(f), this unit is not subject to the requirements of this subpart.
NSPS 40 CFR 60 Subpart TTTT	Standards of Performance for Greenhouse Gas Emissions for Electric Generating Units	No	N/A	This facility does not generate electricity; therefore, this regulation does not apply.
NSPS 40 CFR 60 Subpart UUUU	Emissions Guidelines for Greenhouse Gas Emissions and Compliance Times for Electric Utility Generating Units	No	N/A	This facility does not generate electricity; therefore, this regulation does not apply.
NSPS 40 CFR 60, Subparts WWW, XXX, Cc, and Cf	Standards of performance for Municipal Solid Waste (MSW) Landfills	No	N/A	This facility is not a landfill; therefore, this regulation does not apply.
NESHAP 40 CFR 61 Subpart A	General Provisions	No	N/A	NSPS 40 CFR 61 does not apply to the facility because the facility does not emit or have the triggering substances on site and/or the facility is not involved in the triggering activity. The facility is not subject to this regulation. None of the subparts of Part 61 apply to the facility.
NESHAP 40 CFR 61 Subpart E	National Emission Standards for **Mercury**	No	N/A	The provisions of this subpart are applicable to those stationary sources which process mercury ore to recover mercury, use mercury chlor-alkali cells to produce chlorine gas and alkali metal hydroxide, and incinerate or dry wastewater treatment plant sludge. This facility does not process mercury ore, use mercury chlor-alkali cells, or incinerate or dry wastewater treatment plant sludge. Therefore, this facility is not subject to this regulation.
NESHAP 40 CFR 61 Subpart V	National Emission Standards for **Equipment Leaks** (Fugitive Emission Sources)	No	N/A	This regulation establishes national emission standards for equipment leaks (fugitive emission sources). The facility does not have equipment that operates in volatile hazardous air pollutant (VHAP) service [40 CFR Part 61.240]. The regulated activities subject to this regulation do not take place at this facility. The facility is not subject to this regulation.
MACT 40 CFR 63, Subpart A	General Provisions	No	N/A	This regulation defines general provisions for relevant standards that have been set under this part. The facility does not have any equipment that falls under this category; therefore the regulation does not apply.
MACT 40 CFR 63.760 Subpart HH	Oil and Natural Gas Production Facilities	Yes	3a	This regulation establishes national emission standards for hazardous air pollutants from oil and natural gas production facilities. This facility is an Area Source of HAPs, therefore Unit 3 (200 MMscf/day Glycol Dehydrator) is subject to this regulation per 40 CFR 63.760(d)(2).
MACT 40 CFR 63 Subpart HHH	Natural Gas Transmission and Storage Facilities	No	N/A	This regulation establishes national emission standards for hazardous air pollutants from boilers and heaters at major sources for HAPs. This facility is an area source for HAPs therefore this regulation does not apply. [63.1270(a)]. Additionally, this facility is not a natural gas transmission or storage facility, as defined by this regulation.

MACT 40 CFR 63 Subpart DDDDD	National Emission Standards for Hazardous Air Pollutants for Major Industrial, Commercial, and Institutional Boilers & Process Heaters	No	N/A	The facility does not have any heaters or boilers on site; therefore, this regulation does not apply.
MACT 40 CFR 63 Subpart UUUUU	National Emission Standards for Hazardous Air Pollutants Coal & Oil Fire Electric Utility Steam Generating Unit	No	N/A	This subpart establishes national emission limitations and work practice standards for hazardous air pollutants (HAP) emitted from coal- and oil-fired electric utility steam generating units (EGUs) as defined in §63.10042 of this subpart. This subpart also establishes requirements to demonstrate initial and continuous compliance with the emission limitations. This facility does not contain the affected units and is therefore not subject to this regulation.
MACT 40 CFR 63 Subpart ZZZZ	National Emissions Standards for Hazardous Air Pollutants for Stationary Reciprocating Internal Combustion Engines (**RICE MACT**)	No	N/A	This regulation defines national emissions standards for HAPs from stationary reciprocating Internal Combustion Engines. Unit GEN-1 is a portable non-road engine that will be at the facility for less than 12 months. In accordance with 40 CFR 63.6585(a), this unit is not subject to the requirements of this regulation.
40 CFR 64	**Compliance Assurance Monitoring**	No	N/A	This regulation does not apply as the amine units were removed from the facility.
40 CFR 68	**Chemical Accident Prevention**	No	N/A	Enterprise has more than a threshold quantity of a regulated substance in a process, as determined under §68.115, and is therefore subject to this regulation. Enterprise complies by maintaining a Risk Management Plan.
Title IV – Acid Rain 40 CFR 72	**Acid Rain**	No	N/A	This part establishes the acid rain program. This facility is not an acid rain source. This regulation does not apply.
Title IV – Acid Rain 40 CFR 73	**Sulfur Dioxide** Allowance Emissions	No	N/A	This regulation establishes sulfur dioxide allowance emissions for certain types of facilities. This facility is not an acid rain source. This regulation does not apply.
Title IV-Acid Rain 40 CFR 75	**Continuous Emissions Monitoring**	No	N/A	This facility does not produce commercial electricity for sale; therefore, this regulation does not apply.
Title IV – Acid Rain 40 CFR 76	**Acid Rain** Nitrogen Oxides **Emission Reduction Program**	No	N/A	This regulation establishes an acid rain nitrogen oxides emission reduction program. This regulation applies to each coal-fired utility unit that is subject to an acid rain emissions limitation or reduction requirement for SO_2. This part does not apply because the facility does not operate any coal-fired units [40 CFR Part 76.1].
Title VI – 40 CFR 82	Protection of **Stratospheric Ozone**	No	N/A	Enterprise owns appliances containing CFCs and is therefore subject to this requirement. However, this requirement imposes no obligations on the facility beyond those imposed on any individual or corporate owner of such appliances, and is mentioned here only in the interest of being thorough. Enterprise uses only certified technicians for the maintenance, service, repair and disposal of appliances and maintains the appropriate records for this requirement.

Section 14

Operational Plan to Mitigate Emissions

(Submitting under 20.2.70, 20.2.72, 20.2.74 NMAC)

☑ **Title V Sources** (20.2.70 NMAC)**:** By checking this box and certifying this application the permittee certifies that it has developed an **Operational Plan to Mitigate Emissions During Startups, Shutdowns, and Emergencies** defining the measures to be taken to mitigate source emissions during startups, shutdowns, and emergencies as required by 20.2.70.300.D.5(f) and (g) NMAC. This plan shall be kept on site to be made available to the Department upon request. This plan should not be submitted with this application.

☐ **NSR** (20.2.72 NMAC)**, PSD** (20.2.74 NMAC) **& Nonattainment** (20.2.79 NMAC) **Sources:** By checking this box and certifying this application the permittee certifies that it has developed an **Operational Plan to Mitigate Source Emissions During Malfunction, Startup, or Shutdown** defining the measures to be taken to mitigate source emissions during malfunction, startup, or shutdown as required by 20.2.72.203.A.5 NMAC. This plan shall be kept on site to be made available to the Department upon request. This plan should not be submitted with this application.

☑ **Title V** (20.2.70 NMAC)**, NSR** (20.2.72 NMAC)**, PSD** (20.2.74 NMAC) **& Nonattainment** (20.2.79 NMAC) **Sources:** By checking this box and certifying this application the permittee certifies that it has established and implemented a Plan to Minimize Emissions During Routine or Predictable Startup, Shutdown, and Scheduled Maintenance through work practice standards and good air pollution control practices as required by 20.2.7.14.A and B NMAC. This plan shall be kept on site or at the nearest field office to be made available to the Department upon request. This plan should not be submitted with this application.

Startup and shutdown procedures are either based on manufacturer's recommendations or based on Enterprise's experience with specific equipment. These procedures are designed to proactively address the potential for malfunction to the greatest extent possible. These procedures dictate a sequence of operations that are designed to minimize emissions from the facility during events that result in shutdown and subsequent startup.

Equipment located at this facility is equipped with various safety devices and features that aid in the prevention of excess emissions in the event of an operational emergency. If an operational emergency does occur and excess emissions occur, Enterprise will submit the required Excess Emissions Report as per 20.2.7 NMAC. Corrective action to eliminate the excess emissions and prevent recurrence in the future will be undertaken as quickly as safety allows.

Section 15

Alternative Operating Scenarios

(Submitting under 20.2.70, 20.2.72, 20.2.74 NMAC)

Alternative Operating Scenarios: Provide all information required by the department to define alternative operating scenarios. This includes process, material and product changes; facility emissions information; air pollution control equipment requirements; any applicable requirements; monitoring, recordkeeping, and reporting requirements; and compliance certification requirements. Please ensure applicable Tables in this application are clearly marked to show alternative operating scenario.

Construction Scenarios: When a permit is modified authorizing new construction to an existing facility, NMED includes a condition to clearly address which permit condition(s) (from the previous permit and the new permit) govern during the interval between the date of issuance of the modification permit and the completion of construction of the modification(s). There are many possible variables that need to be addressed such as: Is simultaneous operation of the old and new units permitted and, if so for example, for how long and under what restraints? In general, these types of requirements will be addressed in Section A100 of the permit, but additional requirements may be added elsewhere. Look in A100 of our NSR and/or TV permit template for sample language dealing with these requirements. Find these permit templates at: https://www.env.nm.gov/aqb/permit/aqb_pol.html. Compliance with standards must be maintained during construction, which should not usually be a problem unless simultaneous operation of old and new equipment is requested.

In this section, under the bolded title "Construction Scenarios", specify any information necessary to write these conditions, such as: conservative-realistic estimated time for completion of construction of the various units, whether simultaneous operation of old and new units is being requested (and, if so, modeled), whether the old units will be removed or decommissioned, any PSD ramifications, any temporary limits requested during phased construction, whether any increase in emissions is being requested as SSM emissions or will instead be handled as a separate Construction Scenario (with corresponding emission limits and conditions, etc.

There are no alternative operating scenarios.

Section 16

Air Dispersion Modeling

1) Minor Source Construction (20.2.72 NMAC) and Prevention of Significant Deterioration (PSD) (20.2.74 NMAC) ambient impact analysis (modeling): Provide an ambient impact analysis as required at 20.2.72.203.A(4) and/or 20.2.74.303 NMAC and as outlined in the Air Quality Bureau's Dispersion Modeling Guidelines found on the Planning Section's modeling website. If air dispersion modeling has been waived for one or more pollutants, attach the AQB Modeling Section modeling waiver approval documentation.
2) SSM Modeling: Applicants must conduct dispersion modeling for the total short term emissions during routine or predictable startup, shutdown, or maintenance (SSM) using realistic worst case scenarios following guidance from the Air Quality Bureau's dispersion modeling section. Refer to "Guidance for Submittal of Startup, Shutdown, Maintenance Emissions in Permit Applications (http://www.env.nm.gov/aqb/permit/app_form.html) for more detailed instructions on SSM emissions modeling requirements.
3) Title V (20.2.70 NMAC) ambient impact analysis: Title V applications must specify the construction permit and/or Title V Permit number(s) for which air quality dispersion modeling was last approved. Facilities that have only a Title V permit, such as landfills and air curtain incinerators, are subject to the same modeling required for preconstruction permits required by 20.2.72 and 20.2.74 NMAC.

What is the purpose of this application?	Enter an X for each purpose that applies
New PSD major source or PSD major modification (20.2.74 NMAC). See #1 above.	
New Minor Source or significant permit revision under 20.2.72 NMAC (20.2.72.219.D NMAC). See #1 above. **Note:** Neither modeling nor a modeling waiver is required for VOC emissions.	
Reporting existing pollutants that were not previously reported.	
Reporting existing pollutants where the ambient impact is being addressed for the first time.	
Title V application (new, renewal, significant, or minor modification. 20.2.70 NMAC). See #3 above.	X
Relocation (20.2.72.202.B.4 or 72.202.D.3.c NMAC)	
Minor Source Technical Permit Revision 20.2.72.219.B.1.d.vi NMAC for like-kind unit replacements.	
Other: i.e. SSM modeling. See #2 above.	
This application does not require modeling since this is a No Permit Required (NPR) application.	
This application does not require modeling since this is a Notice of Intent (NOI) application (20.2.73 NMAC).	
This application does not require modeling according to 20.2.70.7.E(11), 20.2.72.203.A(4), 20.2.74.303, 20.2.79.109.D NMAC and in accordance with the Air Quality Bureau's Modeling Guidelines.	

Check each box that applies:

☐ See attached, approved modeling **waiver for all** pollutants from the facility.
☐ See attached, approved modeling **waiver for some** pollutants from the facility.
☐ Attached in Universal Application Form 4 (UA4) is a **modeling report for all** pollutants from the facility.
☐ Attached in UA4 is a **modeling report for some** pollutants from the facility.
☑ No modeling is required.

Air quality dispersion modeling was approved with the application for NSR Permit No. 0220-M10R2.

Section 17

Compliance Test History

(Submitting under 20.2.70, 20.2.72, 20.2.74 NMAC)

To show compliance with existing NSR permits conditions, you must submit a compliance test history. The table below provides an example.

Compliance Test History Table

Unit No.	Test Description	Test Date
1, 2	Tested for NOx and CO as required by Title V Permit P118-R2	May 2008
1, 2	Tested for NOx and CO as required by Title V Permit P118-R2	July 2009
1, 2	Tested for NOx and CO as required by Title V Permit P118-R2	May 2010
1, 2	Tested for NOx and CO as required by Title V Permit P118-R2	June 2011
1, 2	Tested for NOx and CO as required by Title V Permit P118-R2	May 2012
1, 2	Tested for NOx and CO as required by Title V Permit P118-R2	April 2013
1, 2	Tested for NOx and CO as required by Title V Permit P118-R2	January 2014
1, 2	Tested for NOx and CO as required by Title V Permit P118-R2	January 2018
2	Tested for NOx and CO as required by Title V Permit P118-R2	April 2018
1	Tested for NOx and CO as required by Title V Permit P118-R2	May 2018
1, 2	Tested for NOx and CO as required by Title V Permit P118-R2	February 2019
1, 2	Tested for NOx and CO as required by Title V Permit P118-R2	June 2019
1, 2	Tested for NOx and CO as required by Title V Permit P118-R2	August 2019
1, 2	Tested for NOx and CO as required by Title V Permit P118-R2	November 2019
1, 2	Tested for NOx and CO as required by Title V Permit P118-R2	March 2020
1, 2	Tested for NOx and CO as required by Title V Permit P118-R2	May 2020

Section 20

Other Relevant Information

Other relevant information. Use this attachment to clarify any part in the application that you think needs explaining. Reference the section, table, column, and/or field. Include any additional text, tables, calculations or clarifying information.

Additionally, the applicant may propose specific permit language for AQB consideration. In the case of a revision to an existing permit, the applicant should provide the old language and the new language in track changes format to highlight the proposed changes. If proposing language for a new facility or language for a new unit, submit the proposed operating condition(s), along with the associated monitoring, recordkeeping, and reporting conditions. In either case, please limit the proposed language to the affected portion of the permit.

No other relevant information is being submitted as part of this application.

Section 22: Certification

Company Name: Enterprise Field Services, LLC

I, Rodney M. Sartor, hereby certify that the information and data submitted in this application are true and as accurate as possible, to the best of my knowledge and professional expertise and experience.

Signed this 7th day of April, 2022, upon my oath or affirmation, before a notary of the State of Texas.

*Signature: Date: 4/7/2022

Rodney M. Sartor
Printed Name:

Senior Director
Title:

Scribed and sworn before me on this 7th day of April, 2022.

My authorization as a notary of the State of Texas expires on the 23rd day of February, 2026.

Brenda J. Mendez
Notary's Signature

Date: 4/7/2022

Brenda J. Mendez
Notary's Printed Name

BRENDA J. MENDEZ
Notary Public, State of Texas
Comm. Expires 02-23-2026
Notary ID 10264322

*For Title V applications, the signature must be of the Responsible Official as defined in 20.2.70.7.AE NMAC.