NMED AIR QUALITY BUREAU
NSR SIGNIFICANT REVISION APPLICATION

TARGA NORTHERN DELAWARE LLC
Road Runner Gas Processing Plant



Prepared By:

TRINITY CONSULTANTS
9400 Holly Ave NE
Building 3, Suite B
Albuquerque, NM 87122
(505) 266-6611

December 2022

Project 223201.0205

Trinity Consultants
9400 Holly Ave NE, Bldg 3, Ste B, Albuquerque, NM 87122 / P 505.266.6611 / **trinityconsultants.com**

December 14, 2022

Permit Programs Manager
NMED Air Quality Bureau
525 Camino de los Marquez Suite 1
Santa Fe, NM 87505-1816

RE: Application for Significant Revision to NSR Permit 7200-M3
Targa Northern Delaware LLC; Road Runner Gas Processing Plant

Permit Program Manager:

On behalf of Targa Northern Delaware LLC, Trinity Consultants is submitting an NSR Significant Revision application for the Road Runner Gas Processing Plant, currently authorized to operate under NSR Permit No. 7200-M3. With this application, Targa seeks to authorize the removal of proposed Train 4, update representations for proposed Trains 2 and 3, and update other process design, throughput, and equipment representation submitted with the previous application for this facility.

The modeling files and modeling report associated with this application will be sent to the NMED as a separate submittal package.

The format and content of this application are consistent with the Bureau's current policy regarding significant revision applications. Please feel free to contact me by email at rliles@trinityconsultants.com if you have any questions regarding this application.

Sincerely,

TRINITY CONSULTANTS

Robert Liles
Director

Cc: Tammy Wallace (Targa Midstream Services LLC, twallace@targaresources.com)
Charles Bates (Targa Midstream Services LLC, cbates@targaresources.com)
Jaimy Karacaoglu (Trinity Consultants, jaimy.karacaoglu@trinityconsultants.com)

Trinity Project File: 223201.0205

WARNING – THIS CHECK IS PROTECTED BY SPECIAL SECURITY GUARD PROGRAM™ FEATURES

Targa Delaware LLC
811 Louisiana Street
Suite 2100
Houston, TX 77002

JPMORGAN CHASE BANK NA
Chicago, IL

CHECK NO. 5729500127
CHECK DATE 11/30/2022

70-2322/719
263735729

*** * * Five Hundred Dollars And Zero Cents***

CHECK AMOUNT
$500.00

Pay To The Order Of
STATE OF NEW MEXICO
GENERAL FUND AIR QUALITY BUREAU
SANTA FE NM 87505-1816

HEAT SENSITIVE RUB AREA TO VERIFY

THIS CHECK CONTAINS MULTIPLE SECURITY FEATURES – SEE BACK FOR DETAILS

⑈5729500127⑈ ⑆071923226⑆ 26373572 9⑈

PAY TO:
STATE OF NEW MEXICO
GENERAL FUND AIR QUALITY BUREAU
SANTA FE NM 87505-1816

Targa Resources Corp.

VENDOR NO.	CHECK DATE	CHECK NO	CHECK TOTAL
1004108	11/30/2022	5729500127	$500.00

INVOICE NUMBER	INVOICE DATE			AMOUNT PAID
CKRQ112922	20221129	RT to Tammy Wallace	$	500.00

Mail Application To:		**For Department use only:**
New Mexico Environment Department Air Quality Bureau Permits Section 525 Camino de los Marquez, Suite 1 Santa Fe, New Mexico, 87505 Phone: (505) 476-4300 Fax: (505) 476-4375 www.env.nm.gov/aqb		

Universal Air Quality Permit Application

Use this application for NOI, NSR, or Title V sources.

Use this application for: the initial application, modifications, technical revisions, and renewals. For technical revisions, complete Sections, 1-A, 1-B, 2-E, 3, 9 and any other sections that are relevant to the requested action; coordination with the Air Quality Bureau permit staff prior to submittal is encouraged to clarify submittal requirements and to determine if more or less than these sections of the application are needed. Use this application for streamline permits as well.

This application is submitted as (check all that apply)**:** ☐ Request for a No Permit Required Determination (no fee)
☐ **Updating** an application currently under NMED review. Include this page and all pages that are being updated (no fee required).
Construction Status: ☐ Not Constructed ☑ Existing Permitted (or NOI) Facility ☐ Existing Non-permitted (or NOI) Facility
Minor Source: ☐ a NOI 20.2.73 NMAC ☑ 20.2.72 NMAC application or revision ☐ 20.2.72.300 NMAC Streamline application
Title V Source: ☐ Title V (new) ☐ Title V renewal ☐ TV minor mod. ☐ TV significant mod. TV Acid Rain: ☐ New ☐ Renewal
PSD Major Source: ☐ PSD major source (new) ☐ minor modification to a PSD source ☐ a PSD major modification

Acknowledgements:

☑ I acknowledge that a pre-application meeting is available to me upon request. ☐ Title V Operating, Title IV Acid Rain, and NPR applications have no fees.

☑ $500 NSR application Filing Fee enclosed OR ☐ The full permit fee associated with 10 fee points (required w/ streamline applications).

☑ Check No.: **5729500127** in the amount of **$500**

☑ I acknowledge the required submittal format for the hard copy application is printed double sided 'head-to-toe', 2-hole punched (except the Sect. 2 landscape tables is printed 'head-to-head'), numbered tab separators. Incl. a copy of the check on a separate page.

☑ I acknowledge there is an annual fee for permits in addition to the permit review fee: www.env.nm.gov/air-quality/permit-fees-2/.

☐ This facility qualifies for the small business fee reduction per 20.2.75.11.C. NMAC. The full $500.00 filing fee is included with this application and I understand the fee reduction will be calculated in the balance due invoice. The Small Business Certification Form has been previously submitted or is included with this application. (Small Business Environmental Assistance Program Information: www.env.nm.gov/air-quality/small-biz-eap-2/.)

Citation: Please provide the **low level citation** under which this application is being submitted: **20.2. 72.219.D NMAC**
(e.g. application for a new minor source would be 20.2.72.200.A NMAC, one example for a Technical Permit Revision is 20.2.72.219.B.1.b NMAC, a Title V acid rain application would be: 20.2.70.200.C NMAC)

Section 1 – Facility Information

Section 1-A: Company Information

		AI # if known (see 1st 3 to 5 #s of permit IDEA ID No.): 36536	Updating Permit/NOI #: 7200-M3
1	Facility Name: Road Runner Gas Processing Plant	Plant primary SIC Code (4 digits): 1321	
		Plant NAIC code (6 digits): 211112	
a	Facility Street Address (If no facility street address, provide directions from a prominent landmark): From Allsup's store in Loving, go South on Pecos Hwy to Higby Hole Road to Bounds Road. Turn West for 0.5 miles to facility on North side of road.		
2	Plant Operator Company Name: Targa Northern Delaware, LLC	Phone/Fax: (575) 631-7093 / (575) 396-7702	
a	Plant Operator Address: PO Box 1689, Lovington, NM 88260		

b	Plant Operator's New Mexico Corporate ID or Tax ID: 1948249	
3	Plant Owner(s) name(s): Targa Northern Delaware, LLC	Phone/Fax: (575) 631-7093 / (575) 396-7702
a	Plant Owner(s) Mailing Address(s): PO Box 1689, Lovington, NM 88260	
4	Bill To (Company): Targa Northern Delaware, LLC	Phone/Fax: (575) 631-7093 / (575) 396-7702
a	Mailing Address: PO Box 1689, Lovington, NM 88260	E-mail: Jaylen.fuente@targaresources.com
5	☑ Preparer: Rob Liles ☑ Consultant: Trinity Consultants, Inc.	Phone/Fax: (505) 266-6611
a	Mailing Address: 9400 Holly Ave NE, Building 3, Suite B, Albuquerque, NM 87122	E-mail: rliles@trinityconsultants.com
6	Plant Operator Contact: James Aguilar	Phone/Fax: (575) 810-6093 / (575) 396-7702
a	Address: 201 South 4th Street, NM 88210	E-mail: james.aguilar@targaresources.com
7	Air Permit Contact: Tammy Wallace	Title: Sr. Environmental Specialist
a	E-mail: twallace@targaresources.com	Phone/Fax: (713) 584-1292 / (713) 584-1522
b	Mailing Address: 811 Louisiana Street, Ste 2100, Houston, TX 77002	
c	The designated Air permit Contact will receive all official correspondence (i.e. letters, permits) from the Air Quality Bureau.	

Section 1-B: Current Facility Status

1.a	Has this facility already been constructed? ☑ Yes ☐ No	1.b If yes to question 1.a, is it currently operating in New Mexico? ☑ Yes ☐ No
2	If yes to question 1.a, was the existing facility subject to a Notice of Intent (NOI) (20.2.73 NMAC) before submittal of this application? ☐ Yes ☑ No	If yes to question 1.a, was the existing facility subject to a construction permit (20.2.72 NMAC) before submittal of this application? ☑ Yes ☐ No
3	Is the facility currently shut down? ☐ Yes ☑ No	If yes, give month and year of shut down (MM/YY): N/A
4	Was this facility constructed before 8/31/1972 and continuously operated since 1972? ☐ Yes ☑ No	
5	If Yes to question 3, has this facility been modified (see 20.2.72.7.P NMAC) or the capacity increased since 8/31/1972? ☐Yes ☐No ☑ N/A	
6	Does this facility have a Title V operating permit (20.2.70 NMAC)? ☐ Yes ☑ No	If yes, the permit No. is: N/A
7	Has this facility been issued a No Permit Required (NPR)? ☐ Yes ☑ No	If yes, the NPR No. is: N/A
8	Has this facility been issued a Notice of Intent (NOI)? ☐ Yes ☑ No	If yes, the NOI No. is: N/A
9	Does this facility have a construction permit (20.2.72/20.2.74 NMAC)? ☑ Yes ☐ No	If yes, the permit No. is: 7200-M3
10	Is this facility registered under a General permit (GCP-1, GCP-2, etc.)? ☐ Yes ☑ No	If yes, the register No. is: N/A

Section 1-C: Facility Input Capacity & Production Rate

1	What is the facility's maximum input capacity, specify units (reference here and list capacities in Section 20, if more room is required)			
a	Current	Hourly: 36.66 MMscf	Daily: 880 MMscf	Annually: 321,200 MMscf
b	Proposed	Hourly: 30.63 MMscf	Daily: 735 MMscf	Annually: 268,275 MMscf
2	What is the facility's maximum production rate, specify units (reference here and list capacities in Section 20, if more room is required)			
a	Current	Hourly: 36.66 MMscf	Daily: 880 MMscf	Annually: 321,200 MMscf
b	Proposed	Hourly: 30.63 MMscf	Daily: 735 MMscf	Annually: 268,275 MMscf

Section 1-D: Facility Location Information

1	Section: 32	Range: 28E	Township: 23S	County: Eddy	Elevation (ft): 3,124
2	UTM Zone: ☐ 12 or ☑ 13			Datum: ☐ NAD 27 ☑ NAD 83 ☐ WGS 84	
a	UTM E (in meters, to nearest 10 meters): 583,982.0			UTM N (in meters, to nearest 10 meters): 3,570,216.0	
b	**AND** Latitude (deg., min., sec.):32 deg 15 min 56.71 sec			Longitude (deg., min., sec.): -104 deg 06 min 29.97 sec	
3	Name and zip code of nearest New Mexico town: Loving, NM 88256				
4	Detailed Driving Instructions from nearest NM town (attach a road map if necessary): From Allsup's store in Loving, go South on Pecos Hwy to Higby Hole Road to Bounds Road. Turn West for 0.5 miles to facility on North side of road.				
5	The facility is **1.5** (distance) miles **southwest** (direction) of **Loving**, NM (nearest town).				
6	Status of land at facility (check one): ☑ Private ☐ Indian/Pueblo ☐ Federal BLM ☐ Federal Forest Service ☐ Other (specify)				
7	List all municipalities, Indian tribes, and counties within a ten (10) mile radius (20.2.72.203.B.2 NMAC) of the property on which the facility is proposed to be constructed or operated: Loving, NM; Eddy County, NM;				
8	**20.2.72** NMAC applications **only**: Will the property on which the facility is proposed to be constructed or operated be closer than 50 km (31 miles) to other states, Bernalillo County, or a Class I area (see www.env.nm.gov/air-quality/modeling-publications/)? ☑ Yes ☐ No (20.2.72.206.A.7 NMAC) If yes, list all with corresponding distances in kilometers: Lea County (37 km east); Texas 30.6 km south); Carlsbad Caverns National Park (26 km west southwest)				
9	Name nearest Class I area: Carlsbad Caverns National Park (26 km)				
10	Shortest distance (in km) from facility boundary to the boundary of the nearest Class I area (to the nearest 10 meters): 25.97 km				
11	Distance (meters) from the perimeter of the Area of Operations (AO is defined as the plant site inclusive of all disturbed lands, including mining overburden removal areas) to nearest residence, school or occupied structure: 760 meters				
12	Method(s) used to delineate the Restricted Area: Continuous fencing "**Restricted Area**" is an area to which public entry is effectively precluded. Effective barriers include continuous fencing, continuous walls, or other continuous barriers approved by the Department, such as rugged physical terrain with steep grade that would require special equipment to traverse. If a large property is completely enclosed by fencing, a restricted area within the property may be identified with signage only. Public roads cannot be part of a Restricted Area.				
13	Does the owner/operator intend to operate this source as a portable stationary source as defined in 20.2.72.7.X NMAC? ☐ Yes ☑ No A portable stationary source is not a mobile source, such as an automobile, but a source that can be installed permanently at one location or that can be re-installed at various locations, such as a hot mix asphalt plant that is moved to different job sites.				
14	Will this facility operate in conjunction with other air regulated parties on the same property? ☑ No ☐ Yes If yes, what is the name and permit number (if known) of the other facility?				

Section 1-E: Proposed Operating Schedule (The 1-E.1 & 1-E.2 operating schedules may become conditions in the permit.)

1	Facility **maximum** operating ($\frac{\text{hours}}{\text{day}}$): 24	($\frac{\text{days}}{\text{week}}$): 7	($\frac{\text{weeks}}{\text{year}}$): 52	($\frac{\text{hours}}{\text{year}}$): 8,760		
2	Facility's maximum daily operating schedule (if less than 24 $\frac{\text{hours}}{\text{day}}$)? Start: N/A		☐AM ☐PM	End: N/A	☐AM ☐PM	
3	Month and year of anticipated start of construction: Upon permit issuance (estimated April 2023)					
4	Month and year of anticipated construction completion: October 2023					
5	Month and year of anticipated startup of new or modified facility: October 2023					
6	Will this facility operate at this site for more than one year? ☑ Yes ☐ No					

Section 1-F: Other Facility Information

1	Are there any current Notice of Violations (NOV), compliance orders, or any other compliance or enforcement issues related to this facility? ☑ Yes ☐ No If yes, specify: Site is part of an approved environmental audit under AQB Civil Penalty Policy, Appendix D. Approval letter is dated October 26, 2022.

a	If yes, NOV date or description of issue: October 26, 2022 audit approval letter from NMED		NOV Tracking No:
b	Is this application in response to any issue listed in 1-F, 1 or 1a above? ☐ Yes ☑ No If Yes, provide the 1c & 1d info below:		
c	Document Title: N/A	Date: N/A	Requirement # (or page # and paragraph #): N/A
d	Provide the required text to be inserted in this permit: N/A		
2	Is air quality dispersion modeling or modeling waiver being submitted with this application? ☑ Yes ☐ No		
3	Does this facility require an "Air Toxics" permit under 20.2.72.400 NMAC & 20.2.72.502, Tables A and/or B? ☐ Yes ☑ No		
4	Will this facility be a source of federal Hazardous Air Pollutants (HAP)? ☑ Yes ☐ No		
a	If Yes, what type of source? ☐ **Major** (☐ ≥10 tpy of any single HAP **OR** ☐ ≥25 tpy of any combination of HAPS) **OR** ☑ **Minor** (**X** <10 tpy of any single HAP **AND** ☑ <25 tpy of any combination of HAPS)		
5	Is any unit exempt under 20.2.72.202.B.3 NMAC? ☐ Yes ☑ No		
a	If yes, include the name of company providing commercial electric power to the facility: N/A Commercial power is purchased from a commercial utility company, which specifically does not include power generated on site for the sole purpose of the user.		

Section 1-G: Streamline Application (This section applies to 20.2.72.300 NMAC Streamline applications only)

1	☐ I have filled out Section 18, "Addendum for Streamline Applications." ☑ N/A (This is not a Streamline application.)

Section 1-H: Current Title V Information - Required for all applications from TV Sources

(Title V-source required information for all applications submitted pursuant to 20.2.72 NMAC (Minor Construction Permits), or 20.2.74/20.2.79 NMAC (Major PSD/NNSR applications), and/or 20.2.70 NMAC (Title V))

1	Responsible Official (R.O.) (20.2.70.300.D.2 NMAC): Jimmy Oxford		Phone: (940) 220-2493
a	R.O. Title: Vice President Operations	R.O. e-mail: JOxford@targaresources.com	
b	R. O. Address: 4401 North I-35, Suite 303 Denton, Texas 76207		
2	Alternate Responsible Official (20.2.70.300.D.2 NMAC): N/A		Phone: N/A
a	A. R.O. Title: N/A	A. R.O. e-mail: N/A	
b	A. R. O. Address: N/A		
3	Company's Corporate or Partnership Relationship to any other Air Quality Permittee (List the names of any companies that have operating (20.2.70 NMAC) permits and with whom the applicant for this permit has a corporate or partnership relationship): Targa Resources, Inc.		
4	Name of Parent Company ("Parent Company" means the primary name of the organization that owns the company to be permitted wholly or in part.): Targa Resources, Inc.		
a	Address of Parent Company: 811 Louisiana Suite 2100, Houston, TX 77002-1400		
5	Names of Subsidiary Companies ("Subsidiary Companies" means organizations, branches, divisions or subsidiaries, which are owned, wholly or in part, by the company to be permitted.): None		
6	Telephone numbers & names of the owners' agents and site contacts familiar with plant operations: Jaylen Fuentes – (575) 810-6051 and James Aguilar – (575) 810-6093		
7	Affected Programs to include Other States, local air pollution control programs (i.e. Bernalillo) and Indian tribes: Will the property on which the facility is proposed to be constructed or operated be closer than 80 km (50 miles) from other states, local pollution control programs, and Indian tribes and pueblos (20.2.70.402.A.2 and 20.2.70.7.B)? If yes, state which ones and provide the distances in kilometers: Texas 30.6 km		

Section 1-I – Submittal Requirements

Each 20.2.73 NMAC (**NOI**), a 20.2.70 NMAC (**Title V**), a 20.2.72 NMAC (**NSR** minor source), or 20.2.74 NMAC (**PSD**) application package shall consist of the following:

Hard Copy Submittal Requirements:

1) One hard copy **original signed and notarized application package** **printed double sided** **'head-to-toe'** **2-hole punched** as we bind the document on top, not on the side; except Section 2 (landscape tables), which should be head-to-head. Please use **numbered tab separators** in the hard copy submittal(s) as this facilitates the review process. For NOI submittals only, hard copies of UA1, Tables 2A, 2D & 2F, Section 3 and the signed Certification Page are required. Please include a copy of the check on a separate page.

2) If the application is for a minor NSR, PSD, NNSR, or Title V application, include one working hard **copy** for Department use. This copy should be printed in book form, 3-hole punched, and **must be double sided**. Note that this is in addition to the head-to-to 2-hole punched copy required in 1) above. Minor NSR Technical Permit revisions (20.2.72.219.B NMAC) only need to fill out Sections 1-A, 1-B, 3, and should fill out those portions of other Section(s) relevant to the technical permit revision. TV Minor Modifications need only fill out Sections 1-A, 1-B, 1-H, 3, and those portions of other Section(s) relevant to the minor modification. NMED may require additional portions of the application to be submitted, as needed.

3) The entire NOI or Permit application package, including the full modeling study, should be submitted electronically. Electronic files for applications for NOIs, any type of General Construction Permit (GCP), or technical revisions to NSRs must be submitted with compact disk (CD) or digital versatile disc (DVD). For these permit application submittals, **two** CD copies are required (in sleeves, not crystal cases, please), with additional CD copies as specified below. NOI applications require only a single CD submittal. Electronic files for other New Source Review (construction) permits/permit modifications or Title V permits/permit modifications can be submitted on CD/DVD or sent through AQB's secure file transfer service.

Electronic files sent by (check one):

☐ CD/DVD attached to paper application

☑secure electronic transfer.

Air Permit Contact Name: Rob Liles

Email: rliles@trinityconsultants.com

Phone number: (505) 266-6611

a. If the file transfer service is chosen by the applicant, after receipt of the application, the Bureau will email the applicant with instructions for submitting the electronic files through a secure file transfer service. Submission of the electronic files through the file transfer service needs to be completed within 3 business days after the invitation is received, so the applicant should ensure that the files are ready when sending the hard copy of the application. The applicant will not need a password to complete the transfer. **Do not use the file transfer service for NOIs, any type of GCP, or technical revisions to NSR permits.**

4) Optionally, the applicant may submit the files with the application on compact disk (CD) or digital versatile disc (DVD) following the instructions above and the instructions in 5 for applications subject to PSD review.

5) If **air dispersion modeling** is required by the application type, include the **NMED Modeling Waiver** and/or electronic air dispersion modeling report, input, and output files. The dispersion modeling ***summary report only*** should be submitted as hard copy(ies) unless otherwise indicated by the Bureau.

6) If the applicant submits the electronic files on CD and the application is subject to PSD review under 20.2.74 NMAC (PSD) or NNSR under 20.2.79 NMC include,
   a. one additional CD copy for US EPA,
   b. one additional CD copy for each federal land manager affected (NPS, USFS, FWS, USDI) and,
   c. one additional CD copy for each affected regulatory agency other than the Air Quality Bureau.

   If the application is submitted electronically through the secure file transfer service, these extra CDs do not need to be submitted.

Electronic Submittal Requirements [in addition to the required hard copy(ies)]:

1) All required electronic documents shall be submitted as 2 separate CDs or submitted through the AQB secure file transfer service. Submit a single PDF document of the entire application as submitted and the individual documents comprising the application.

2) The documents should also be submitted in Microsoft Office compatible file format (Word, Excel, etc.) allowing us to access the text and formulas in the documents (copy & paste). Any documents that cannot be submitted in a Microsoft Office compatible

format shall be saved as a PDF file from within the electronic document that created the file. If you are unable to provide Microsoft office compatible electronic files or internally generated PDF files of files (items that were not created electronically: i.e. brochures, maps, graphics, etc,), submit these items in hard copy format. We must be able to review the formulas and inputs that calculated the emissions.

3) It is preferred that this application form be submitted as 4 electronic files (3 MSWord docs: Universal Application section 1 [UA1], Universal Application section 3-19 [UA3], and Universal Application 4, the modeling report [UA4]) and 1 Excel file of the tables (Universal Application section 2 [UA2]). Please include as many of the 3-19 Sections as practical in a single MS Word electronic document. Create separate electronic file(s) if a single file becomes too large or if portions must be saved in a file format other than MS Word.

4) The electronic file names shall be a maximum of 25 characters long (including spaces, if any). The format of the electronic Universal Application shall be in the format: "A-3423-FacilityName". The "A" distinguishes the file as an application submittal, as opposed to other documents the Department itself puts into the database. Thus, all electronic application submittals should begin with "A-". Modifications to existing facilities should use the core permit number (i.e. '3423') the Department assigned to the facility as the next 4 digits. Use 'XXXX' for new facility applications. The format of any separate electronic submittals (additional submittals such as non-Word attachments, re-submittals, application updates) and Section document shall be in the format: "A-3423-9-description", where "9" stands for the section # (in this case Section 9-Public Notice). Please refrain, as much as possible, from submitting any scanned documents as this file format is extremely large, which uses up too much storage capacity in our database. Please take the time to fill out the header information throughout all submittals as this will identify any loose pages, including the Application Date (date submitted) & Revision number (0 for original, 1, 2, etc.; which will help keep track of subsequent partial update(s) to the original submittal. Do not use special symbols (#, @, etc.) in file names. The footer information should not be modified by the applicant.

Table of Contents

Section 1: General Facility Information
Section 2: Tables
Section 3: Application Summary
Section 4: Process Flow Sheet
Section 5: Plot Plan Drawn to Scale
Section 6: All Calculations
Section 7: Information Used to Determine Emissions
Section 8: Map(s)
Section 9: Proof of Public Notice
Section 10: Written Description of the Routine Operations of the Facility
Section 11: Source Determination
Section 12: PSD Applicability Determination for All Sources & Special Requirements for a PSD Application
Section 13: Discussion Demonstrating Compliance with Each Applicable State & Federal Regulation
Section 14: Operational Plan to Mitigate Emissions
Section 15: Alternative Operating Scenarios
Section 16: Air Dispersion Modeling
Section 17: Compliance Test History
Section 18: Addendum for Streamline Applications (streamline applications only)
Section 19: Requirements for the Title V (20.2.70 NMAC) Program (Title V applications only)
Section 20: Other Relevant Information
Section 21: Addendum for Landfill Applications
Section 22: Certification Page

Table 2-A: Regulated Emission Sources

Unit and stack numbering must correspond throughout the application package. If applying for a NOI under 20.2.73 NMAC, equipment exemptions under 2.72.202 NMAC do not apply.

Unit Number[1]	Source Description	Make	Model #	Serial #	Manufacturer's Rated Capacity[3] (Specify Units)	Requested Permitted Capacity[3] (Specify Units)	Date of Manufacture[2] / Date of Construction/ Reconstruction[2]	Controlled by Unit # / Emissions vented to Stack #	Source Classification Code (SCC)	For Each Piece of Equipment, Check One	RICE Ignition Type (CI, SI, 4SLB, 4SRB, 2SLB)[4]	Replacing Unit No.
EP-1	Emergency Flare (Pilot with auto ignition)	Zeeco Inc.	FL5100	31927	240.025 MMscf/yr	240.025 MMscf/yr	2017 / 2017	NA / EP-1	31000205	☐ Existing (unchanged) ☐ To be Removed ☐ New/Additional ☐ Replacement Unit ☑ To Be Modified ☐ To be Replaced	NA	NA
2/3-EP-1	Emergency Flare (Pilot with auto ignition)	Zeeco Inc.	FL5100	TBD	240.025 MMscf/yr	240.025 MMscf/yr	TBD / TBD	NA / 2/3-EP-1	31000205	☐ Existing (unchanged) ☐ To be Removed ☐ New/Additional ☐ Replacement Unit ☐ To Be Modified ☑ To be Replaced	NA	NA
2-EP-1	Emergency Flare (Pilot with auto ignition)	TBD	TBD	TBD	240.025 MMscf/yr	240.025 MMscf/yr	TBD / TBD	NA / 2-EP-1	31000205	☐ Existing (unchanged) ☐ To be Removed ☐ New/Additional ☑ Replacement Unit ☐ To Be Modified ☐ To be Replaced	NA	2/3-EP-1
4-EP-1	Emergency Flare (Pilot with auto ignition)	Zeeco Inc.	FL5100	TBD	240.025 MMscf/yr	240.025 MMscf/yr	TBD / TBD	NA / 4-EP-1	31000205	☐ Existing (unchanged) ☑ To be Removed ☐ New/Additional ☐ Replacement Unit ☐ To Be Modified ☐ To be Replaced	NA	NA
3-EP-1	Emergency Flare (Pilot with auto ignition)	TBD	TBD	TBD	240.025 MMscf/yr	240.025 MMscf/yr	TBD / TBD	NA / 3-EP-1	31000205	☐ Existing (unchanged) ☐ To be Removed ☑ New/Additional ☐ Replacement Unit ☐ To Be Modified ☐ To be Replaced	NA	NA
EP-2	Trim Reboiler	Fabsco Shell & Tube	E-207	516-11764-2/HI14-149	26.5 MMBtu/hr	26.5 MMBtu/hr	2017 / 2017	NA / EP-2	31000404	☐ Existing (unchanged) ☐ To be Removed ☐ New/Additional ☐ Replacement Unit ☑ To Be Modified ☐ To be Replaced	NA	NA
2-EP-2	Trim Reboiler	Fabsco Shell & Tube	E-207	TBD	26.5 MMBtu/hr	26.5 MMBtu/hr	TBD / TBD	NA / 2-EP-2	31000404	☐ Existing (unchanged) ☐ To be Removed ☐ New/Additional ☐ Replacement Unit ☑ To Be Modified ☐ To be Replaced	NA	NA
3-EP-2	Trim Reboiler	Fabsco Shell & Tube	E-207	TBD	26.5 MMBtu/hr	26.5 MMBtu/hr	TBD / TBD	NA / 3-EP-2	31000404	☐ Existing (unchanged) ☐ To be Removed ☐ New/Additional ☐ Replacement Unit ☑ To Be Modified ☐ To be Replaced	NA	NA
4-EP-2	Trim Reboiler	Fabsco Shell & Tube	E-207	TBD	17.55 MMBtu/hr	17.55 MMBtu/hr	TBD / TBD	NA / 4-EP-2	31000404	☐ Existing (unchanged) ☑ To be Removed ☐ New/Additional ☐ Replacement Unit ☐ To Be Modified ☐ To be Replaced	NA	NA
EP-3A	Amine Reboiler Heater	Patrick	2BKU30/5A-312/26872002 0A	TBD	70.28 MMBtu/hr	70.28 MMBtu/hr	2017 / 2017	NA / EP-3A	31000404	☐ Existing (unchanged) ☐ To be Removed ☐ New/Additional ☐ Replacement Unit ☑ To Be Modified ☐ To be Replaced	NA	NA
EP-3B	Amine Reboiler Heater	Patrick	TBD	TBD	84.77 MMBtu/hr	84.77 MMBtu/hr	TBD / TBD	NA / EP-3B	31000404	☐ Existing (unchanged) ☐ To be Removed ☐ New/Additional ☐ Replacement Unit ☑ To Be Modified ☐ To be Replaced	NA	NA
EP-4	Glycol Reboiler Heater	Reset Energy	H-2801	F-9	3.9 MMBtu/hr	3.9 MMBtu/hr	2017 / 2017	NA / EP-4	31000302	☐ Existing (unchanged) ☐ To be Removed ☐ New/Additional ☐ Replacement Unit ☑ To Be Modified ☐ To be Replaced	NA	NA
2-EP-4	Glycol Reboiler Heater	TBD	TBD	TBD	3.9 MMBtu/hr	3.9 MMBtu/hr	TBD / TBD	NA / 2-EP-4	31000302	☐ Existing (unchanged) ☐ To be Removed ☐ New/Additional ☐ Replacement Unit ☑ To Be Modified ☐ To be Replaced	NA	NA
3-EP-4	Glycol Reboiler Heater	TBD	TBD	TBD	3.9 MMBtu/hr	3.9 MMBtu/hr	TBD / TBD	NA / 3-EP-4	31000302	☐ Existing (unchanged) ☐ To be Removed ☐ New/Additional ☐ Replacement Unit ☑ To Be Modified ☐ To be Replaced	NA	NA
4-EP-4	Glycol Reboiler Heater	TBD	TBD	TBD	3 MMBtu/hr	3 MMBtu/hr	TBD / TBD	NA / 4-EP-4	31000302	☐ Existing (unchanged) ☑ To be Removed ☐ New/Additional ☐ Replacement Unit ☐ To Be Modified ☐ To be Replaced	NA	NA
EP-5	Regen Reboiler Heater	Heatec	HCI5010-40-G	HI16-201	9.5 MMBtu/hr	9.5 MMBtu/hr	2/2017 / 2017	NA / EP-5	31000404	☐ Existing (unchanged) ☐ To be Removed ☐ New/Additional ☐ Replacement Unit ☑ To Be Modified ☐ To be Replaced	NA	NA
2-EP-5	Regen Reboiler Heater	TBD	TBD	TBD	9.5 MMBtu/hr	9.5 MMBtu/hr	TBD / TBD	NA / 2-EP-5	31000404	☐ Existing (unchanged) ☐ To be Removed ☐ New/Additional ☐ Replacement Unit ☑ To Be Modified ☐ To be Replaced	NA	NA
3-EP-5	Regen Reboiler Heater	TBD	TBD	TBD	9.5 MMBtu/hr	9.5 MMBtu/hr	TBD / TBD	NA / 3-EP-5	31000404	☐ Existing (unchanged) ☐ To be Removed ☐ New/Additional ☐ Replacement Unit ☑ To Be Modified ☐ To be Replaced	NA	NA
4-EP-5	Regen Reboiler Heater	TBD	TBD	TBD	5.61 MMBtu/hr	5.61 MMBtu/hr	TBD / TBD	NA / 4-EP-5	31000404	☐ Existing (unchanged) ☑ To be Removed ☐ New/Additional ☐ Replacement Unit ☐ To Be Modified ☐ To be Replaced	NA	NA
EP-6	Stabilizer Heater	Phoenix	PX-180	17169	23.4 MMBtu/hr	23.4 MMBtu/hr	2017 / 2017	NA / EP-6	31000404	☐ Existing (unchanged) ☐ To be Removed ☐ New/Additional ☐ Replacement Unit ☑ To Be Modified ☐ To be Replaced	NA	NA
2-EP-6	Stabilizer Heater	TBD	TBD	TBD	23.4 MMBtu/hr	23.4 MMBtu/hr	TBD / TBD	NA / 2-EP-6	31000404	☐ Existing (unchanged) ☐ To be Removed ☐ New/Additional ☐ Replacement Unit ☑ To Be Modified ☐ To be Replaced	NA	NA

Unit Number[1]	Source Description	Make	Model #	Serial #	Manufact-urer's Rated Capacity[3] (Specify Units)	Requested Permitted Capacity[3] (Specify Units)	Date of Manufacture[2] / Date of Construction/ Reconstruction[2]	Controlled by Unit # / Emissions vented to Stack #	Source Classi-fication Code (SCC)	For Each Piece of Equipment, Check One	RICE Ignition Type (CI, SI, 4SLB, 4SRB, 2SLB)[4]	Replacing Unit No.
EP-7	Glycol Dehydrator Still Vent	Reset Energy	T-2707	153	240 MMscf/d	240 MMscf/d	2017 2017	EP-9 EP-9	31000301	☐ Existing (unchanged) ☐ To be Removed ☐ New/Additional ☐ Replacement Unit ☑ To Be Modified ☐ To be Replaced	NA	NA
2-EP-7	Glycol Dehydrator Still Vent	TBD	TBD	TBD	240 MMscf/d	240 MMscf/d	TBD TBD	EP-9 EP-9	31000301	☐ Existing (unchanged) ☐ To be Removed ☐ New/Additional ☐ Replacement Unit ☑ To Be Modified ☐ To be Replaced	NA	NA
3-EP-7	Glycol Dehydrator Still Vent	TBD	TBD	TBD	240 MMscf/d	240 MMscf/d	TBD TBD	EP-9 EP-9	31000301	☐ Existing (unchanged) ☐ To be Removed ☐ New/Additional ☐ Replacement Unit ☑ To Be Modified ☐ To be Replaced	NA	NA
4-EP-7	Glycol Dehydrator Still Vent	TBD	TBD	TBD	220 MMscf/d	220 MMscf/d	TBD TBD	EP-9 EP-9	31000301	☐ Existing (unchanged) ☑ To be Removed ☐ New/Additional ☐ Replacement Unit ☐ To Be Modified ☐ To be Replaced	NA	NA
EP-8	Amine Still Vent	PBP Fabrication	V-5520	493	245 MMscf/d	245 MMscf/d	2017 2017	EP-9 EP-9	31000305	☐ Existing (unchanged) ☐ To be Removed ☐ New/Additional ☐ Replacement Unit ☑ To Be Modified ☐ To be Replaced	NA	NA
2-EP-8	Amine Still Vent	TBD	TBD	TBD	245 MMscf/d	245 MMscf/d	2017 2017	EP-9 EP-9	31000305	☐ Existing (unchanged) ☐ To be Removed ☑ New/Additional ☐ Replacement Unit ☐ To Be Modified ☐ To be Replaced	NA	NA
3-EP-8	Amine Still Vent	TBD	TBD	TBD	245 MMscf/d	245 MMscf/d	2017 2017	EP-9 EP-9	31000305	☐ Existing (unchanged) ☐ To be Removed ☑ New/Additional ☐ Replacement Unit ☐ To Be Modified ☐ To be Replaced	NA	NA
EP-9	Thermal Oxidizer	Zeeco Inc	TO-55	32339	71 MMBtu/hr	71 MMBtu/hr	2017 2017	NA EP-9	31000209	☐ Existing (unchanged) ☐ To be Removed ☐ New/Additional ☐ Replacement Unit ☑ To Be Modified ☐ To be Replaced	NA	NA
SSM	Startup, Shutdown, Malfunction Emissions	TBD	TBD	TBD	NA	NA	TBD TBD	N/A N/A	31088811	☐ Existing (unchanged) ☐ To be Removed ☐ New/Additional ☐ Replacement Unit ☑ To Be Modified ☐ To be Replaced	NA	NA
COMB-1	Combustor	Zeeco Inc	VCU-7.5.40 Flare System	31974-001	12.75 MMscf/yr	12.75 MMscf/yr	2017 2017	NA COMB-1	31000209	☐ Existing (unchanged) ☐ To be Removed ☐ New/Additional ☐ Replacement Unit ☑ To Be Modified ☐ To be Replaced	NA	NA
LOAD	Condensate Loadout Emissions	TBD	TBD	TBD	2,920,000 bbl/yr	2,920,000 bbl/yr	TBD TBD	N/A EP-9	40600132	☐ Existing (unchanged) ☐ To be Removed ☐ New/Additional ☐ Replacement Unit ☑ To Be Modified ☐ To be Replaced	NA	NA
HAUL	Haul Road Emissions	TBD	TBD	TBD	4380 trips/yr	4380 trips/yr	TBD TBD	N/A N/A	31088811	☐ Existing (unchanged) ☐ To be Removed ☐ New/Additional ☐ Replacement Unit ☑ To Be Modified ☐ To be Replaced	NA	NA
FUG	Fugitive Emissions	TBD	TBD	TBD	NA	NA	TBD TBD	N/A N/A	31000220	☐ Existing (unchanged) ☐ To be Removed ☐ New/Additional ☐ Replacement Unit ☑ To Be Modified ☐ To be Replaced	NA	NA
FUG2	Fugitive Emissions	TBD	TBD	TBD	NA	NA	TBD TBD	N/A N/A	31000220	☐ Existing (unchanged) ☑ To be Removed ☐ New/Additional ☐ Replacement Unit ☐ To Be Modified ☐ To be Replaced	NA	NA
T-1	Condensate Storage Tank	Tank &Vessel Boilers LP	NA	201723	1000 bbl	1000 bbl	2017 2017	COMB-1 COMB-1	40400311	☐ Existing (unchanged) ☐ To be Removed ☐ New/Additional ☐ Replacement Unit ☑ To Be Modified ☐ To be Replaced	NA	NA
T-2	Condensate Storage Tank	Tank &Vessel Boilers LP	NA	201724	1000 bbl	1000 bbl	2017 2017	COMB-1 COMB-1	40400311	☐ Existing (unchanged) ☐ To be Removed ☐ New/Additional ☐ Replacement Unit ☑ To Be Modified ☐ To be Replaced	NA	NA
T-3	Condensate Storage Tank	Tank &Vessel Boilers LP	NA	201720	1000 bbl	1000 bbl	2017 2017	COMB-1 COMB-1	40400311	☐ Existing (unchanged) ☐ To be Removed ☐ New/Additional ☐ Replacement Unit ☑ To Be Modified ☐ To be Replaced	NA	NA
T-4	Condensate Storage Tank	Tank &Vessel Boilers LP	NA	201721	1000 bbl	1000 bbl	2017 2017	COMB-1 COMB-1	40400311	☐ Existing (unchanged) ☐ To be Removed ☐ New/Additional ☐ Replacement Unit ☑ To Be Modified ☐ To be Replaced	NA	NA
T-5	Condensate Storage Tank	Tank &Vessel Boilers LP	NA	201722	1000 bbl	1000 bbl	2017 2017	COMB-1 COMB-1	40400311	☐ Existing (unchanged) ☐ To be Removed ☐ New/Additional ☐ Replacement Unit ☑ To Be Modified ☐ To be Replaced	NA	NA
T-6	Produced Water Tank	Palmer	NA	ST-1711323	400 bbl	400 bbl	8/2017 2017	NA NA	40400315	☐ Existing (unchanged) ☐ To be Removed ☐ New/Additional ☐ Replacement Unit ☑ To Be Modified ☐ To be Replaced	NA	NA
D-1	Electric Driven Residue Compressor	Ariel	KBZ/6	F54680	60 MMscf/d	60 MMscf/d	9/2017 2017	NA NA	31000203	☑ Existing (unchanged) ☐ To be Removed ☐ New/Additional ☐ Replacement Unit ☐ To Be Modified ☐ To be Replaced	NA	NA
D-2	Electric Driven Residue Compressor	Ariel	KBZ/6	F54701	60 MMscf/d	60 MMscf/d	9/2017 2017	NA NA	31000203	☑ Existing (unchanged) ☐ To be Removed ☐ New/Additional ☐ Replacement Unit ☐ To Be Modified ☐ To be Replaced	NA	NA
D-3	Electric Driven Residue Compressor	Ariel	KBZ/6	F54720	60 MMscf/d	60 MMscf/d	9/2017 2017	NA NA	31000203	☑ Existing (unchanged) ☐ To be Removed ☐ New/Additional ☐ Replacement Unit ☐ To Be Modified ☐ To be Replaced	NA	NA
D-4	Electric Driven Residue Compressor	Ariel	KBZ/6	F54750	60 MMscf/d	60 MMscf/d	9/2017 2017	NA NA	31000203	☑ Existing (unchanged) ☐ To be Removed ☐ New/Additional ☐ Replacement Unit ☐ To Be Modified ☐ To be Replaced	NA	NA

Unit Number[1]	Source Description	Make	Model #	Serial #	Manufact-urer's Rated Capacity[3] (Specify Units)	Requested Permitted Capacity[3] (Specify Units)	Date of Manufacture[2] / Date of Construction/ Reconstruction[2]	Controlled by Unit # / Emissions vented to Stack #	Source Classi-fication Code (SCC)	For Each Piece of Equipment, Check One	RICE Ignition Type (CI, SI, 4SLB, 4SRB, 2SLB)[4]	Replacing Unit No.
D-5	Electric Driven Refrigeration Compressor	GEA	XCR-XC26555-18	XC0507	4500 hp	4500 hp	2017 TBD	NA NA	31000203	☐ Existing (unchanged) ☐ To be Removed ☑ New/Additional ☐ Replacement Unit ☐ To Be Modified ☐ To be Replaced	NA	NA
D-6	Electric Driven Refrigeration Compressor	GEA	XCR-XC26555-18	XC0508	4500 hp	4500 hp	2017 TBD	NA NA	31000203	☐ Existing (unchanged) ☐ To be Removed ☑ New/Additional ☐ Replacement Unit ☐ To Be Modified ☐ To be Replaced	NA	NA
D-7	Electric Driven Refrigeration Compressor	GEA	XCR-XC26555-18	XC0510	4500 hp	4500 hp	2017 TBD	NA NA	31000203	☐ Existing (unchanged) ☐ To be Removed ☑ New/Additional ☐ Replacement Unit ☐ To Be Modified ☐ To be Replaced	NA	NA
2-D-1	Electric Driven Flash Gas Compressor	Ariel	JGH/4	F54483	40 MMscf/d	40 MMscf/d	8/2017 2017	NA NA	31000203	☐ Existing (unchanged) ☑ To be Removed ☐ New/Additional ☐ Replacement Unit ☐ To Be Modified ☐ To be Replaced	NA	NA
2-D-2	Electric Driven Flash Gas Compressor	Ariel	JGH/4	F54484	40 MMscf/d	40 MMscf/d	8/2017 2017	NA NA	31000203	☐ Existing (unchanged) ☑ To be Removed ☐ New/Additional ☐ Replacement Unit ☐ To Be Modified ☐ To be Replaced	NA	NA
2-D-3	Electric Driven Flash Gas Compressor	Ariel	KBZ/6	TBD	TBD	TBD	TBD TBD	NA NA	31000203	☐ Existing (unchanged) ☑ To be Removed ☐ New/Additional ☐ Replacement Unit ☐ To Be Modified ☐ To be Replaced	NA	NA
2-D-4	Electric Driven Flash Gas Compressor	Ariel	KBZ/6	TBD	TBD	TBD	TBD TBD	NA NA	31000203	☐ Existing (unchanged) ☑ To be Removed ☐ New/Additional ☐ Replacement Unit ☐ To Be Modified ☐ To be Replaced	NA	NA
2-D-1	Electric Driven Residue Compressor	Ariel	KBZ4	TBD	TBD	TBD	2012 TBD	NA NA	31000203	☐ Existing (unchanged) ☐ To be Removed ☑ New/Additional ☐ Replacement Unit ☐ To Be Modified ☐ To be Replaced	NA	NA
2-D-2	Electric Driven Residue Compressor	Ariel	KBZ4	TBD	TBD	TBD	2012 TBD	NA NA	31000203	☐ Existing (unchanged) ☐ To be Removed ☑ New/Additional ☐ Replacement Unit ☐ To Be Modified ☐ To be Replaced	NA	NA
2-D-3	Electric Driven Residue Compressor	Ariel	KBZ4	TBD	TBD	TBD	2012 TBD	NA NA	31000203	☐ Existing (unchanged) ☐ To be Removed ☑ New/Additional ☐ Replacement Unit ☐ To Be Modified ☐ To be Replaced	NA	NA
2-D-4	Electric Driven Residue Compressor	Ariel	KBZ4	TBD	TBD	TBD	2012 TBD	NA NA	31000203	☐ Existing (unchanged) ☐ To be Removed ☑ New/Additional ☐ Replacement Unit ☐ To Be Modified ☐ To be Replaced	NA	NA
2-D-5	Electric Refrigeration Compressor	Frick	RWF546E	TBD	TBD	TBD	2012 TBD	NA NA	31000203	☐ Existing (unchanged) ☐ To be Removed ☑ New/Additional ☐ Replacement Unit ☐ To Be Modified ☐ To be Replaced	NA	NA
2-D-6	Electric Refrigeration Compressor	Frick	RWF546E	TBD	TBD	TBD	2012 TBD	NA NA	31000203	☐ Existing (unchanged) ☐ To be Removed ☑ New/Additional ☐ Replacement Unit ☐ To Be Modified ☐ To be Replaced	NA	NA
2-D-7	Electric Refrigeration Compressor	Frick	RWF546E	TBD	TBD	TBD	2012 TBD	NA NA	31000203	☐ Existing (unchanged) ☐ To be Removed ☑ New/Additional ☐ Replacement Unit ☐ To Be Modified ☐ To be Replaced	NA	NA
2-D-8	Electric Refrigeration Compressor	Frick	RWF546E	TBD	TBD	TBD	2012 TBD	NA NA	31000203	☐ Existing (unchanged) ☐ To be Removed ☑ New/Additional ☐ Replacement Unit ☐ To Be Modified ☐ To be Replaced	NA	NA
3-D-1	Electric Driven Residue Compressor	Ariel	KBZ4	TBD	60 MMscf/d	60 MMscf/d	2023 TBD	NA NA	31000203	☑ Existing (unchanged) ☐ To be Removed ☐ New/Additional ☐ Replacement Unit ☐ To Be Modified ☐ To be Replaced	NA	NA
3-D-2	Electric Driven Residue Compressor	Ariel	KBZ4	TBD	60 MMscf/d	60 MMscf/d	2023 TBD	NA NA	31000203	☑ Existing (unchanged) ☐ To be Removed ☐ New/Additional ☐ Replacement Unit ☐ To Be Modified ☐ To be Replaced	NA	NA
3-D-3	Electric Driven Residue Compressor	Ariel	KBZ4	TBD	60 MMscf/d	60 MMscf/d	2023 TBD	NA NA	31000203	☑ Existing (unchanged) ☐ To be Removed ☐ New/Additional ☐ Replacement Unit ☐ To Be Modified ☐ To be Replaced	NA	NA
3-D-4	Electric Driven Residue Compressor	Ariel	KBZ4	TBD	60 MMscf/d	60 MMscf/d	2023 TBD	NA NA	31000203	☑ Existing (unchanged) ☐ To be Removed ☐ New/Additional ☐ Replacement Unit ☐ To Be Modified ☐ To be Replaced	NA	NA
3-D-5	Electric Driven Refrigeration Compressor	Frick	RWF856E	TBD	TBD	TBD	2023 TBD	NA NA	31000203	☐ Existing (unchanged) ☐ To be Removed ☑ New/Additional ☐ Replacement Unit ☐ To Be Modified ☐ To be Replaced	NA	NA
3-D-6	Electric Driven Refrigeration Compressor	Frick	RWF856E	TBD	TBD	TBD	2023 TBD	NA NA	31000203	☐ Existing (unchanged) ☐ To be Removed ☑ New/Additional ☐ Replacement Unit ☐ To Be Modified ☐ To be Replaced	NA	NA

Unit Number[1]	Source Description	Make	Model #	Serial #	Manufact-urer's Rated Capacity[3] (Specify Units)	Requested Permitted Capacity[3] (Specify Units)	Date of Manufacture[2] / Date of Construction/ Reconstruction[2]	Controlled by Unit # / Emissions vented to Stack #	Source Classi-fication Code (SCC)	For Each Piece of Equipment, Check One	RICE Ignition Type (CI, SI, 4SLB, 4SRB, 2SLB)[4]	Replacing Unit No.
3-D-7	Electric Driven Refrigeration Compressor	Frick	RWF856E	TBD	TBD	TBD	2023 TBD	NA NA	31000203	☐ Existing (unchanged) ☐ To be Removed ☑ New/Additional ☐ Replacement Unit ☐ To Be Modified ☐ To be Replaced	NA	NA
3-D-8	Electric Driven Refrigeration Compressor	Frick	RWF856E	TBD	TBD	TBD	2023 TBD	NA NA	31000203	☐ Existing (unchanged) ☐ To be Removed ☑ New/Additional ☐ Replacement Unit ☐ To Be Modified ☐ To be Replaced	NA	NA
4-D-1	Electric Driven Residue Compressor	Ariel	KBZ/6	TBD	TBD	TBD	TBD TBD	NA NA	31000203	☐ Existing (unchanged) ☑ To be Removed ☐ New/Additional ☐ Replacement Unit ☐ To Be Modified ☐ To be Replaced	NA	NA
4-D-2	Electric Driven Residue Compressor	Ariel	KBZ/6	TBD	TBD	TBD	TBD TBD	NA NA	31000203	☐ Existing (unchanged) ☑ To be Removed ☐ New/Additional ☐ Replacement Unit ☐ To Be Modified ☐ To be Replaced	NA	NA
4-D-3	Electric Driven Residue Compressor	Ariel	KBZ/6	TBD	TBD	TBD	TBD TBD	NA NA	31000203	☐ Existing (unchanged) ☑ To be Removed ☐ New/Additional ☐ Replacement Unit ☐ To Be Modified ☐ To be Replaced	NA	NA
4-D-4	Electric Driven Residue Compressor	Ariel	KBZ/6	TBD	TBD	TBD	TBD TBD	NA NA	31000203	☐ Existing (unchanged) ☑ To be Removed ☐ New/Additional ☐ Replacement Unit ☐ To Be Modified ☐ To be Replaced	NA	NA

[2] Specify dates required to determine regulatory applicability.
[3] To properly account for power conversion efficiencies, generator set rated capacity shall be reported as the rated capacity of the engine in horsepower, not the kilowatt capacity of the generator set.
[4] "4SLB" means four stroke lean burn engine, "4SRB" means four stroke rich burn engine, "2SLB" means two stroke lean burn engine, "CI" means compression ignition, and "SI" means spark ignition

Table 2-B: Insignificant Activities[1] (20.2.70 NMAC) OR Exempted Equipment (20.2.72 NMAC)

All 20.2.70 NMAC (Title V) applications must list all Insignificant Activities in this table. All 20.2.72 NMAC applications must list Exempted Equipment in this table. If equipment listed on this table is exempt under 20.2.72.202.B.5, include emissions calculations and emissions totals for 202.B.5 "similar functions" units, operations, and activities in Section 6, Calculations. Equipment and activities exempted under 20.2.72.202 NMAC may not necessarily be Insignificant under 20.2.70 NMAC (and vice versa). Unit & stack numbering must be consistent throughout the application package. Per Exemptions Policy 02-012.00 (see http://www.env.nm.gov/aqb/permit/aqb_pol.html), 20.2.72.202.B NMAC Exemptions do not apply, but 20.2.72.202.A NMAC exemptions do apply to NOI facilities under 20.2.73 NMAC. List 20.2.72.301.D.4 NMAC Auxiliary Equipment for Streamline applications in Table 2-A. The List of Insignificant Activities (for TV) can be found online at https://www.env.nm.gov/wp-content/uploads/sites/2/2017/10/InsignificantListTitleV.pdf. TV sources may elect to enter both TV Insignificant Activities and Part 72 Exemptions on this form.

Unit Number	Source Description	Manufacturer	Model No. / Serial No.	Max Capacity / Capacity Units	List Specific 20.2.72.202 NMAC Exemption (e.g. 20.2.72.202.B.5) / Insignificant Activity citation (e.g. IA List Item #1.a)	Date of Manufacture /Reconstruction[2] / Date of Installation /Construction[2]	For Each Piece of Equipment, Check Onc
T-7	Used Oil/Slop Oil/Skid Runoff	N/A	N/A N/A	400 bbl	20.72.202.B(2)(a) NMAC	2020 TBD	☑ Existing (unchanged) ☐ To be Removed ☐ New/Additional ☐ Replacement Unit ☐ To Be Modified ☐ To be Replaced
T-8	Used Oil/Slop Oil/Skid Runoff	N/A	N/A N/A	400 bbl	20.72.202.B(2)(a) NMAC	2020 TBD	☑ Existing (unchanged) ☐ To be Removed ☐ New/Additional ☐ Replacement Unit ☐ To Be Modified ☐ To be Replaced
LOAD-2	Produced Water Loading	N/A	N/A N/A	1,032,064 gal/yr	20.72.202.B(5) NMAC	TBD TBD	☐ Existing (unchanged) ☐ To be Removed ☑ New/Additional ☐ Replacement Unit ☐ To Be Modified ☐ To be Replaced
T-9	Methanol Tank	N/A	N/A N/A	1,000 gallons	20.72.202.B(5) NMAC	TBD 2020	☐ Existing (unchanged) ☐ To be Removed ☑ New/Additional ☐ Replacement Unit ☐ To Be Modified ☐ To be Replaced
T-10	Methanol Tank	N/A	N/A N/A	1,500 gallons	20.72.202.B(5) NMAC	TBD 2020	☐ Existing (unchanged) ☐ To be Removed ☑ New/Additional ☐ Replacement Unit ☐ To Be Modified ☐ To be Replaced
T-11	Diesel Tote	N/A	N/A N/A	520 gallons	20.72.202.B(2)(a) NMAC	TBD TBD	☐ Existing (unchanged) ☐ To be Removed ☑ New/Additional ☐ Replacement Unit ☐ To Be Modified ☐ To be Replaced
T-12	Diesel Tote	N/A	N/A N/A	520 gallons	20.72.202.B(2)(a) NMAC	TBD TBD	☐ Existing (unchanged) ☐ To be Removed ☑ New/Additional ☐ Replacement Unit ☐ To Be Modified ☐ To be Replaced
MSSM-Glycol	Glycol Dehydration Unit - Replacement of Glycol Solution	N/A	N/A N/A	N/A N/A	20.72.202.B(2)(a) NMAC	N/A N/A	☐ Existing (unchanged) ☐ To be Removed ☑ New/Additional ☐ Replacement Unit ☐ To Be Modified ☐ To be Replaced
MSSM-Amine	Amine Unit - Replacement of Amine Solution	N/A	N/A N/A	N/A N/A	20.72.202.B(2)(a) NMAC	N/A N/A	☐ Existing (unchanged) ☐ To be Removed ☑ New/Additional ☐ Replacement Unit ☐ To Be Modified ☐ To be Replaced
MSSM-Aerosol	Aerosol Lubricants	N/A	N/A N/A	N/A N/A	20.72.202.A(2) NMAC	N/A N/A	☐ Existing (unchanged) ☐ To be Removed ☑ New/Additional ☐ Replacement Unit ☐ To Be Modified ☐ To be Replaced
MSSM-Piping	Piping Components	N/A	N/A N/A	N/A N/A	20.72.202.A(15) NMAC	N/A N/A	☐ Existing (unchanged) ☐ To be Removed ☑ New/Additional ☐ Replacement Unit ☐ To Be Modified ☐ To be Replaced
MSSM-Cal	Use of Calibration Gases	N/A	N/A N/A	N/A N/A	20.72.202.A(10) NMAC	N/A N/A	☐ Existing (unchanged) ☐ To be Removed ☑ New/Additional ☐ Replacement Unit ☐ To Be Modified ☐ To be Replaced
MSSM-Misc	Miscellanous Maintenance Activities	N/A	N/A N/A	N/A N/A	20.72.202.A(2) NMAC	N/A N/A	☐ Existing (unchanged) ☐ To be Removed ☑ New/Additional ☐ Replacement Unit ☐ To Be Modified ☐ To be Replaced

[1] Insignificant activities exempted due to size or production rate are defined in 20.2.70.300.D.6, 20.2.70.7.Q NMAC, and the NMED/AQB List of Insignificant Activities, dated September 15, 2008. Emissions from these insignificant activities do not need to be reported, unless specifically requested.

[2] Specify date(s) required to determine regulatory applicability.

Table 2-C: Emissions Control Equipment

Unit and stack numbering must correspond throughout the application package. Only list control equipment for TAPs if the TAP's maximum uncontrolled emissions rate is over its respective threshold as listed in 20.2.72 NMAC, Subpart V, Tables A and B. In accordance with 20.2.72.203.A(3) and (8) NMAC, 20.2.70.300.D(5)(b) and (e) NMAC, and 20.2.73.200.B(7) NMAC, the permittee shall report all control devices and list each pollutant controlled by the control device regardless if the applicant takes credit for the reduction in emissions.

Control Equipment Unit No.	Control Equipment Description	Date Installed	Controlled Pollutant(s)	Controlling Emissions for Unit Number(s)[1]	Efficiency (% Control by Weight)	Method used to Estimate Efficiency
BTEX-1	Condenser	2017	VOC, HAP	EP-7, 2-EP-7, 3-EP-7	98%	Engineering Estimate
COMB-1	Combustor	2017	VOC, HAP, H_2S	T-1, T-2, T-3, T-4, T-5	95%	Manufacturer Spec
EP-9	Thermal Oxidizer	2017	VOC, HAP, H2S	EP-8, 2-EP-8, 3-EP-8, EP-7, 2-EP-7, 3-EP-7	99.9%	Manufacturer Spec
EP-1	SSM Flare	2017	VOC, HAP, H_2S	Train 1 inlet gas and residue gas	98%	Manufacturer Spec
2-EP-1	SSM Flare	TBD	VOC, HAP, H_2S	Train 2 inlet gas and residue gas	98%	Manufacturer Spec
3-EP-1	SSM Flare	TBD	VOC, HAP, H_2S	Train 3 inlet gas and residue gas	98%	Manufacturer Spec

[1] List each control device on a separate line. For each control device, list all emission units controlled by the control device.

Table 2-D: Maximum Emissions (under normal operating conditions)

☐ **This Table was intentionally left blank because it would be identical to Table 2-E.**

Maximum Emissions are the emissions at maximum capacity and prior to (in the absence of) pollution control, emission-reducing process equipment, or any other emission reduction. Calculate the hourly emissions using the worst case hourly emissions for each pollutant. For each pollutant, calculate the annual emissions as if the facility were operating at maximum plant capacity without pollution controls for 8760 hours per year, unless otherwise approved by the Department. List Hazardous Air Pollutants (HAP) & Toxic Air Pollutants (TAPs) in Table 2-I. Unit & stack numbering must be consistent throughout the application package. Fill all cells in this table with the emission numbers or a "-" symbol. A "-" symbol indicates that emissions of this pollutant are not expected. Numbers shall be expressed to at least 2 decimal points (e.g. 0.41, 1.41, or 1.41E-4).

Unit No.	NOx		CO		VOC		SOx		PM[1]		PM10[1]		PM2.5[1]		H_2S		Lead	
	lb/hr	ton/yr	lb/hr	ton/yr	lb/hr	ton/yr	lb/hr	ton/yr	lb/hr	ton/yr	lb/hr	ton/yr	lb/hr	ton/yr	lb/hr	ton/yr	lb/hr	ton/yr
EP-2	2.60	11.38	2.18	9.56	0.14	0.63	0.022	0.10	0.20	0.86	0.20	0.86	0.20	0.86	-	-	-	-
2-EP-2	0.84	3.68	2.18	9.56	0.14	0.63	0.022	0.10	0.20	0.86	0.20	0.86	0.20	0.86	-	-	-	-
3-EP-2	0.84	3.68	2.18	9.56	0.14	0.63	0.022	0.10	0.20	0.86	0.20	0.86	0.20	0.86	-	-	-	-
EP-3A	2.23	9.77	4.53	19.83	0.38	1.66	0.06	0.26	0.52	2.29	0.52	2.29	0.52	2.29	-	-	-	-
EP-3B	0.34	1.49	3.48	15.22	1.61	7.05	0.07	0.31	1.10	4.83	1.10	4.83	1.10	4.83	-	-	-	-
EP-4	0.38	1.67	0.32	1.41	0.021	0.092	0.0032	0.014	0.029	0.127	0.029	0.127	0.029	0.127	-	-	-	-
2-EP-4	0.38	1.67	0.32	1.41	0.021	0.092	0.0032	0.014	0.029	0.127	0.029	0.127	0.029	0.127	-	-	-	-
3-EP-4	0.38	1.67	0.32	1.41	0.021	0.092	0.0032	0.014	0.029	0.127	0.029	0.127	0.029	0.127	-	-	-	-
EP-5	0.93	4.08	0.78	3.43	0.051	0.22	0.008	0.035	0.071	0.31	0.071	0.31	0.071	0.31	-	-	-	-
2-EP-5	0.93	4.08	0.78	3.43	0.051	0.22	0.008	0.035	0.071	0.31	0.071	0.31	0.071	0.31	-	-	-	-
3-EP-5	0.93	4.08	0.78	3.43	0.051	0.22	0.008	0.035	0.071	0.31	0.071	0.31	0.071	0.31	-	-	-	-
EP-6	2.29	10.05	1.93	8.44	0.126	0.55	0.019	0.09	0.17	0.76	0.17	0.76	0.17	0.76	-	-	-	-
2-EP-6	2.29	10.05	1.93	8.44	0.126	0.55	0.019	0.09	0.17	0.76	0.17	0.76	0.17	0.76	-	-	-	-
EP-7	-	-	-	-	102.15	447.40	-	-	-	-	-	-	-	-	2.15E-05	9.42E-05	-	-
2-EP-7	-	-	-	-	102.15	447.40	-	-	-	-	-	-	-	-	2.15E-05	9.42E-05	-	-
3-EP-7	-	-	-	-	102.15	447.40	-	-	-	-	-	-	-	-	2.15E-05	9.42E-05	-	-
EP-8	-	-	-	-	74.67	327.04	-	-	-	-	-	-	-	-	4.72	20.68	-	-
2-EP-8	-	-	-	-	74.67	327.04	-	-	-	-	-	-	-	-	4.72	20.68	-	-
3-EP-8	-	-	-	-	74.67	327.04	-	-	-	-	-	-	-	-	4.72	20.68	-	-
EP-9	No emissions from this unit in an uncontrolled scenario																-	-
EP-1	0.22	0.96	0.44	1.91	-	-	0.0093	0.041	-	-	-	-	-	-	2.65E-05	1.16E-04	-	-
2-EP-1	0.17	0.72	0.33	1.45	-	-	0.0082	0.036	-	-	-	-	-	-	2.00E-05	8.76E-05	-	-
3-EP-1	0.03	0.14	0.065	0.28	-	-	0.0016	0.0071	-	-	-	-	-	-	1.40E-06	6.11E-06	-	-
T-1	-	-	-	-	32.12	16.87	-	-	-	-	-	-	-	-	0.0038	0.0023		
T-2	-	-	-	-	32.12	16.87	-	-	-	-	-	-	-	-	0.0038	0.0023	-	-
T-3	-	-	-	-	32.12	16.87	-	-	-	-	-	-	-	-	0.0038	0.0023	-	-
T-4	-	-	-	-	32.12	16.87	-	-	-	-	-	-	-	-	0.0038	0.0023	-	-
T-5	-	-	-	-	32.12	16.87	-	-	-	-	-	-	-	-	0.0038	0.0023	-	-
T-6	-	-	-	-	0.14	0.63	-	-	-	-	-	-	-	-	5.19E-03	0.0096	-	-
COMB-1	-	-	-	-	-	-	-	-	-	-	-	-	-	-	-	-	-	-
LOAD	-	-	-	-	257.50	1088.27	-	-	-	-	-	-	-	-	-	-	-	-
FUG	-	-	-	-	26.37	115.48	-	-	-	-	-	-	-	-	0.0007	0.0031	-	-
HAUL	-	-	-	-	-	-	-	-	0.41	1.46	0.11	0.37	0.011	0.037	-	-	-	-
SSM-TO	-	-	-	-	326.15	3.26	-	-	-	-	-	-	-	-	14.17	0.142	-	-
MSSM	-	-	-	-	276.65	4.12	-	-	-	-	-	-	-	-	-	-	-	-
MSST	-	-	-	-	38.16	0.034	-	-	-	-	-	-	-	-	-	-	-	-
MSSB	-	-	-	-	590.99	11.82	-	-	-	-	-	-	-	-	-	-	-	-
Totals	15.80	69.19	22.55	98.75	2,060.56	2,989.83	0.29	1.25	3.28	14.02	2.97	12.93	2.88	12.59	18.91	20.85	-	-

[1]**Condensable Particulate Matter:** Include condensable particulate matter emissions for PM10 and PM2.5 if the source is a combustion source. Do not include condensable particulate matter for PM unless PM is set equal to PM10 and PM2.5. Particulate matter (PM) is not subject to an ambient air quality standard, but PM is a regulated air pollutant under PSD (20.2.74 NMAC) and Title V (20.2.70 NMAC).

Table 2-E: Requested Allowable Emissions

Unit & stack numbering must be consistent throughout the application package. Fill all cells in this table with the emission numbers or a "-" symbol. A "-" symbol indicates that emissions of this pollutant are not expected. Numbers shall be expressed to at least 2 decimal points (e.g. 0.41, 1.41, or $1.41E^{-4}$).

Unit No.	NOx		CO		VOC		SOx		PM[1]		PM10[1]		PM2.5[1]		H_2S		Lead	
	lb/hr	ton/yr	lb/hr	ton/yr	lb/hr	ton/yr	lb/hr	ton/yr	lb/hr	ton/yr	lb/hr	ton/yr	lb/hr	ton/yr	lb/hr	ton/yr	lb/hr	ton/yr
EP-2	2.60	11.38	2.18	9.56	0.14	0.63	0.022	0.10	0.20	0.86	0.20	0.86	0.20	0.86	-	-	-	-
2-EP-2	0.84	3.68	2.18	9.56	0.14	0.63	0.022	0.10	0.20	0.86	0.20	0.86	0.20	0.86	-	-	-	-
3-EP-2	0.84	3.68	2.18	9.56	0.14	0.63	0.022	0.10	0.20	0.86	0.20	0.86	0.20	0.86	-	-	-	-
EP-3A	2.23	9.77	4.53	19.83	0.38	1.66	0.06	0.26	0.52	2.29	0.52	2.29	0.52	2.29	-	-	-	-
EP-3B	0.34	1.49	3.48	15.22	1.61	7.05	0.07	0.31	1.10	4.83	1.10	4.83	1.10	4.83	-	-	-	-
EP-4	0.38	1.67	0.32	1.41	0.021	0.092	0.0032	0.014	0.029	0.127	0.029	0.127	0.029	0.127	-	-	-	-
2-EP-4	0.38	1.67	0.32	1.41	0.021	0.092	0.0032	0.014	0.029	0.127	0.029	0.127	0.029	0.127	-	-	-	-
3-EP-4	0.38	1.67	0.32	1.41	0.021	0.092	0.0032	0.014	0.029	0.127	0.029	0.127	0.029	0.127	-	-	-	-
EP-5	0.93	4.08	0.78	3.43	0.051	0.22	0.008	0.035	0.071	0.31	0.071	0.31	0.071	0.31	-	-	-	-
2-EP-5	0.93	4.08	0.78	3.43	0.051	0.22	0.008	0.035	0.071	0.31	0.071	0.31	0.071	0.31	-	-	-	-
3-EP-5	0.93	4.08	0.78	3.43	0.051	0.22	0.008	0.035	0.071	0.31	0.071	0.31	0.071	0.31	-	-	-	-
EP-6	2.29	10.05	1.93	8.44	0.126	0.55	0.019	0.09	0.17	0.76	0.17	0.76	0.17	0.76	-	-	-	-
2-EP-6	2.29	10.05	1.93	8.44	0.126	0.55	0.019	0.09	0.17	0.76	0.17	0.76	0.17	0.76	-	-	-	-
EP-7	Emissions represented at the thermal oxidizer (Unit EP-9)																	
2-EP-7	Emissions represented at the thermal oxidizer (Unit EP-9)																	
3-EP-7	Emissions represented at the thermal oxidizer (Unit EP-9)																	
EP-8	Emissions represented at the thermal oxidizer (Unit EP-9)																	
2-EP-8	Emissions represented at the thermal oxidizer (Unit EP-9)																	
3-EP-8	Emissions represented at the thermal oxidizer (Unit EP-9)																	
EP-9	6.12	26.81	2.98	13.05	0.53	2.32	26.66	116.79	0.60	2.63	0.60	2.63	0.60	2.63	0.014	0.062	-	-
T-1	Emissions represented at the combustor (Unit COMB-1)																	
T-2	Emissions represented at the combustor (Unit COMB-1)																	
T-3	Emissions represented at the combustor (Unit COMB-1)																	
T-4	Emissions represented at the combustor (Unit COMB-1)																	
T-5	Emissions represented at the combustor (Unit COMB-1)																	
T-6	-	-	-	-	0.14	0.63	-	-	-	-	-	-	-	-	0.0052	0.0096	-	-
COMB-1	7.73	3.08	15.43	6.16	37.59	4.26	0.16	0.0038	0.42	0.17	0.42	0.17	0.42	0.17	0.0035	0.0006	-	-
LOAD	-	-	-	-	12.88	54.41	-	-	-	-	-	-	-	-	-	-	-	-
FUG	-	-	-	-	26.37	115.48	-	-	-	-	-	-	-	-	0.0007	0.0031	-	-
HAUL	-	-	-	-	-	-	-	-	0.41	1.46	0.11	0.37	0.011	0.037	-	-	-	-
Totals	29.23	97.26	40.12	114.32	80.39	189.75	27.09	117.96	4.30	16.81	3.99	15.72	3.89	15.39	0.024	0.075	-	-

[1] **Condensable Particulate Matter:** Include condensable particulate matter emissions for PM10 and PM2.5 if the source is a combustion source. Do not include condensable particulate matter for PM unless PM is set equal to PM10 and PM2.5. Particulate matter (PM) is not subject to an ambient air quality standard, but it is a regulated air pollutant under PSD (20.2.74 NMAC) and Title V (20.2.70 NMAC).

"*" denotes that an hourly emission rate is not requested.

Table 2-F: Additional Emissions during Startup, Shutdown, and Routine Maintenance (SSM)

☐ This table is intentionally left blank since all emissions at this facility due to routine or predictable startup, shutdown, or scehduled maintenance are no higher than those listed in Table 2-E and a malfunction emission limit is not already permitted or requested. If you are required to report GHG emissions as described in Section 6a, include any GHG emissions during Startup, Shutdown, and/or Scheduled Maintenance (SSM) in Table 2-P. Provide an explanations of SSM emissions in Section 6 and 6a.

All applications for facilities that have emissions during routine our predictable startup, shutdown or scheduled maintenance (SSM)[1], including NOI applications, must include in this table the Maximum Emissions during routine or predictable startup, shutdown and scheduled maintenance (20.2.7 NMAC, 20.2.72.203.A.3 NMAC, 20.2.73.200.D.2 NMAC). In Section 6 and 6a, provide emissions calculations for all SSM emissions reported in this table. Refer to "Guidance for Submittal of Startup, Shutdown, Maintenance Emissions in Permit Applications (https://www.env.nm.gov/aqb/permit/aqb_pol.html) for more detailed instructions. Numbers shall be expressed to at least 2 decimal points (e.g. 0.41, 1.41, or 1.41E-4).

Unit No.	NOx		CO		VOC		SOx		PM[2]		PM10[2]		PM2.5[2]		H_2S		Lead	
	lb/hr	ton/yr	lb/hr	ton/yr	lb/hr	ton/yr	lb/hr	ton/yr	lb/hr	ton/yr	lb/hr	ton/yr	lb/hr	ton/yr	lb/hr	ton/yr	lb/hr	ton/yr
EP-1	1,578.35	19.90	3,150.97	39.72	2,484.70	29.82	828.55	9.98	-	-	-	-	-	-	8.98	0.11	-	-
2-EP-1	1,578.29	19.66	3,150.87	39.26	2,484.70	29.82	828.55	9.98	-	-	-	-	-	-	8.98	0.11	-	-
3-EP-1	1,578.16	19.08	3,150.60	38.09	2,484.70	29.82	828.54	9.95	-	-	-	-	-	-	8.98	0.11	-	-
SSM-TO	-	-	-	-	326.15	3.26	-	-	-	-	-	-	-	-	14.17	0.142	-	-
MSSM	-	-	-	-	276.65	4.12	-	-	-	-	-	-	-	-	0.011	0.00016	-	-
MSSB	Emissions represented at the combustor (Unit COMB-1)																	
MSST	-	-	-	-	38.16	0.034	-	-	-	-	-	-	-	-	-	-	-	-
Totals	4,734.80	58.64	9,452.44	117.07	8,095.07	96.86	2,485.63	29.91	0.00	0.00	0.00	0.00	0.00	0.00	41.13	0.47	0.00	0.00

[1] **For instance**, if the short term steady-state Table 2-E emissions are 5 lb/hr and the SSM rate is 12 lb/hr, enter 7 lb/hr in this table. If the annual steady-state Table 2-E emissions are 21.9 TPY, and the number of scheduled SSM events result in annual emissions of 31.9 TPY, enter 10.0 TPY in the table below.

[2] **Condensable Particulate Matter:** Include condensable particulate matter emissions for PM10 and PM2.5 if the source is a combustion source. Do not include condensable particulate matter for PM unless PM is set equal to PM10 and PM2.5. Particulate matter (PM) is not subject to an ambient air quality standard, but it is a regulated air pollutant under PSD (20.2.74 NMAC) and Title V (20.2.70 NMAC).

Table 2-G: Stack Exit and Fugitive Emission Rates for Special Stacks

☑ I have elected to leave this table blank because this facility does not have any stacks/vents that split emissions from a single source or combine emissions from more than one source listed in table 2-A. Additionally, the emission rates of all stacks match the Requested allowable emission rates stated in Table 2-E.

Use this table to list stack emissions (requested allowable) from split and combined stacks. List Toxic Air Pollutants (TAPs) and Hazardous Air Pollutants (HAPs) in Table 2-I. List all fugitives that are associated with the normal, routine, and non-emergency operation of the facility. Unit and stack numbering must correspond throughout the application package. Refer to Table 2-E for instructions on use of the "-" symbol and on significant figures.

Stack No.	Serving Unit Number(s) from Table 2-A	NOx		CO		VOC		SOx		PM		PM10		PM2.5		☑ H_2S or ☐ Lead	
		lb/hr	ton/yr	lb/hr	ton/yr	lb/hr	ton/yr	lb/hr	ton/yr	lb/hr	ton/yr	lb/hr	ton/yr	lb/hr	ton/yr	lb/hr	ton/yr
Totals:																	

Table 2-H: Stack Exit Conditions

Unit and stack numbering must correspond throughout the application package. Include the stack exit conditions for each unit that emits from a stack, including blowdown venting parameters and tank emissions. If the facility has multiple operating scenarios, complete a separate Table 2-H for each scenario and, for each, type scenario name here:

Stack Number	Serving Unit Number(s) from Table 2-A	Orientation (H-Horizontal V=Vertical)	Rain Caps (Yes or No)	Height Above Ground (ft)	Temp. (F)	Flow Rate		Moisture by Volume (%)	Velocity (ft/sec)	Inside Diameter (ft)
						(acfs)	(dscfs)			
EP-1	EP-1	V	No	100.00	1832	51.52	-	-	65.60	1.00
2-EP-1	2-EP-1	V	No	199.00	1832	51.52	-	-	65.60	1.00
3-EP-1	3-EP-1	V	No	150.00	1832	51.52	-	-	65.60	1.00
EP-2	EP-2	V	No	22.50	624	589.87	-	-	51.12	3.83
2-EP-2	2-EP-2	V	No	25.80	624	217.97	-	-	51.12	2.33
3-EP-2	3-EP-2	V	No	25.80	624	217.97	-	-	51.12	2.33
EP-3A	EP-3A	V	No	24.80	624	1694.47	-	-	176.12	3.50
EP-3B	EP-3B	V	No	32.70	624	2213.19	-	-	176.12	4.00
EP-4	EP-4	V	No	25.00	624	243.70	-	-	77.57	2.00
2-EP-4	2-EP-4	V	No	31.80	624	243.70	-	-	77.57	2.00
3-EP-4	3-EP-4	V	No	31.80	624	243.70	-	-	77.57	2.00
EP-5	EP-5	V	No	15.80	624	27.54	-	-	5.61	2.50
2-EP-5	2-EP-5	V	No	22.00	550	59.33	-	-	42.71	1.33
3-EP-5	3-EP-5	V	No	22.00	550	59.33	-	-	42.71	1.33
EP-6	EP-6	V	No	24.90	624	503.62	-	-	118.11	2.33
2-EP-6	2_EP-6	V	No	24.90	624	503.62	-	-	118.11	2.33
EP-9	EP-7, 2-EP-7, 3-EP-7, EP-8, 2-EP-8, 3-EP-8	V	No	76.00	1600	951.12	-	-	12.11	10.0
COMB-1	T-1 through T-5	V	No	50.00	1500	708.50	-	-	18.41	7.00

Table 2-I: Stack Exit and Fugitive Emission Rates for HAPs and TAPs

In the table below, report the Potential to Emit for each HAP from each regulated emission unit listed in Table 2-A, only if the entire facility emits the HAP at a rate greater than or equal to one (1) ton per year For each such emission unit, HAPs shall be reported to the nearest 0.1 tpy. Each facility-wide Individual HAP total and the facility-wide Total HAPs shall be the sum of all HAP sources calculated to the nearest 0.1 ton per year. Per 20.2.72.403.A.1 NMAC, facilities not exempt [see 20.2.72.402.C NMAC] from TAP permitting shall report each TAP that has an uncontrolled emission rate in excess of its pounds per hour screening level specified in 20.2.72.502 NMAC. TAPs shall be reported using one more significant figure than the number of significant figures shown in the pound per hour threshold corresponding to the substance. Use the HAP nomenclature as it appears in Section 112 (b) of the 1990 CAAA and the TAP nomenclature as it listed in 20.2.72.502 NMAC. Include tank-flashing emissions estimates of HAPs in this table. For each HAP or TAP listed, fill all cells in this table with the emission numbers or a "-" symbol. A "-" symbol indicates that emissions of this pollutant are not expected or the pollutant is emitted in a quantity less than the threshold amounts described above.

Stack No.	Unit No.(s)	Total HAPs		Benzene ☑ HAP or ☐ TAP		Hexane ☑ HAP or ☐ TAP		Provide Pollutant Name Here ☐ HAP or ☐ TAP		Provide Pollutant Name Here ☐ HAP or ☐ TAP		Provide Pollutant Name Here ☐ HAP or ☐ TAP		Provide Pollutant Name Here ☐ HAP or ☐ TAP		Provide Pollutant Name Here ☐ HAP or ☐ TAP		Provide Pollutant Name Here ☐ HAP or ☐ TAP	
		lb/hr	ton/yr	lb/hr	ton/yr	lb/hr	ton/yr	lb/hr	ton/yr	lb/hr	ton/yr	lb/hr	ton/yr	lb/hr	ton/yr	lb/hr	ton/yr	lb/hr	ton/yr
EP-2	**EP-2**	0.0021	0.0092	5.46E-05	2.39E-04	-	-												
2-EP-2	**2-EP-2**	0.0021	0.0092	5.46E-05	2.39E-04	-	-												
3-EP-2	**3-EP-2**	0.0021	0.0092	5.46E-05	2.39E-04	-	-												
EP-3A	**EP-3A**	0.0055	0.024	1.45E-04	6.34E-04	-	-												
EP-3B	**EP-3B**	0.0067	0.029	0.00E+00	0.00E+00	-	-												
EP-4	**EP-4**	0.00031	0.0013	8.03E-06	3.52E-05	-	-												
2-EP-4	**2-EP-4**	0.00031	0.0013	8.03E-06	3.52E-05	-	-												
3-EP-4	**3-EP-4**	0.00031	0.0013	8.03E-06	3.52E-05	-	-												
EP-5	**EP-5**	0.00075	0.0033	1.96E-05	8.57E-05	-	-												
2-EP-5	**2-EP-5**	0.00075	0.0033	1.96E-05	8.57E-05	-	-												
3-EP-5	**3-EP-5**	0.00075	0.0033	1.96E-05	8.57E-05	-	-												
EP-6	**EP-6**	0.0018	0.0081	4.82E-05	2.11E-04	-	-												
2-EP-6	**2-EP-6**	0.0018	0.0081	4.82E-05	2.11E-04	-	-												
EP-7	**EP-9**	-	-	-	-	-	-												
2-EP-7	**EP-9**	-	-	-	-	-	-												
3-EP-7	**EP-9**	-	-	-	-	-	-												
EP-8	**EP-9**	-	-	-	-	-	-												
2-EP-9	**EP-9**	-	-	-	-	-	-												
3-EP-8	**EP-9**	-	-	-	-	-	-												
EP-9	**EP-9**	0.28	1.24	0.133	0.584	-	-												
EP-1	**EP-1**	58.10	0.70	-	-	47.72	0.57												
2-EP-1	**2-EP-2**	58.10	0.70	-	-	47.72	0.57												
3-EP-1	**3-EP-1**	58.10	0.70	-	-	47.72	0.57												
T-1	**COMB-1**	-	-	-	-	-	-												
T-2	**COMB-1**	-	-	-	-	-	-												
T-3	**COMB-1**	-	-	-	-	-	-												
T-4	**COMB-1**	-	-	-	-	-	-												
T-5	**COMB-1**	-	-	-	-	-	-												
T-6	**T-6**	0.0050	0.022	0.0036	0.016	3.06E-04	1.34E-03												
COMB-1	**COMB-1**	3.43	4.74	3.43	4.74	0.67	0.066												
LOAD	**COMB-1**	1.16	4.58	-	-	0.053	0.21												
FUG	**N/A**	1.83	8.03	-	-	1.12	4.92												
HAUL	**N/A**	-	-	-	-	-	-												
SSM-TO	**N/A**	216.77	2.17	104.82	1.05	11.07	0.11												
MSSM	**N/A**	15.05	0.22	-	-	-	-												
MSST	**N/A**	20.01	0.0029	16.75	0.0001	3.17	0.0027												
MSSB	**COMB-1**	-	-	-	-	-	-												
Totals:		432.9	23.21	125.13	6.39	159.24	7.02	-	-	-	-	-	-	-	-	-	-	-	-

Table 2-J: Fuel

Specify fuel characteristics and usage. Unit and stack numbering must correspond throughout the application package.

Unit No.	Fuel Type (low sulfur Diesel, ultra low sulfur diesel, Natural Gas, Coal, …)	Fuel Source: purchased commercial, pipeline quality natural gas, residue gas, raw/field natural gas, process gas (e.g. SRU tail gas) or other	Specify Units				
			Lower Heating Value BTU/scf	Hourly Usage scf/hr	Annual Usage MMscf/yr	Sulfur gr/dscf	% Ash
EP-1	Natural Gas	Residue Gas	1071.8	500.00	4.38	2.00	NA
2-EP-1	Natural Gas	Residue Gas	1071.8	78.00	0.68	2.00	NA
3-EP-1	Natural Gas	Residue Gas	1071.8	219.00	1.92	2.00	NA
EP-2	Natural Gas	Residue Gas	1020	25980.39	227.59	2.00	NA
2-EP-2	Natural Gas	Residue Gas	1020	25980.39	227.59	2.00	NA
3-EP-2	Natural Gas	Residue Gas	1020	25980.39	227.59	2.00	NA
EP-3A	Natural Gas	Residue Gas	1020	68901.96	603.58	2.00	NA
EP-3B	Natural Gas	Residue Gas	1020	83107.84	728.02	2.00	NA
EP-4	Natural Gas	Residue Gas	1020	3823.53	33.49	2.00	NA
2-EP-4	Natural Gas	Residue Gas	1020	3823.53	33.49	2.00	NA
3-EP-4	Natural Gas	Residue Gas	1020	3823.53	33.49	2.00	NA
EP-5	Natural Gas	Residue Gas	1020	9313.73	81.59	2.00	NA
2-EP-5	Natural Gas	Residue Gas	1020	9313.73	81.59	2.00	NA
3-EP-5	Natural Gas	Residue Gas	1020	9313.73	81.59	2.00	NA
EP-6	Natural Gas	Residue Gas	1020	22941.18	200.96	2.00	NA
2-EP-6	Natural Gas	Residue Gas	1020	22941.18	200.96	2.00	NA
EP-9	Natural Gas	Residue Gas	1020	29411.76	257.65	2.00	NA
COMB-1	Natural Gas	Residue Gas	1020	65.00	0.57	2.00	NA

Table 2-K: Liquid Data for Tanks Listed in Table 2-L

For each tank, list the liquid(s) to be stored in each tank. If it is expected that a tank may store a variety of hydrocarbon liquids, enter "mixed hydrocarbons" in the Composition column for that tank and enter the corresponding data of the most volatile liquid to be stored in the tank. If tank is to be used for storage of different materials, list all the materials in the "All Calculations" attachment, run the newest version of TANKS on each, and use the material with the highest emission rate to determine maximum uncontrolled and requested allowable emissions rate. The permit will specify the most volatile category of liquids that may be stored in each tank. Include appropriate tank-flashing modeling input data. Use additional sheets if necessary. Unit and stack numbering must correspond throughout the application package.

Tank No.	SCC Code	Material Name	Composition	Liquid Density (lb/gal)	Vapor Molecular Weight (lb/lb*mol)	Average Storage Conditions		Max Storage Conditions	
						Temperature (°F)	True Vapor Pressure (psia)	Temperature (°F)	True Vapor Pressure (psia)
T-1	40400311	Condensate	Condensate	3.66	52.44	63.2	6.82	95	4.69
T-2	40400311	Condensate	Condensate	3.66	52.44	63.2	6.82	95	4.69
T-3	40400311	Condensate	Condensate	3.66	52.44	63.2	6.82	95	4.69
T-4	40400311	Condensate	Condensate	3.66	52.44	63.2	6.82	95	4.69
T-5	40400311	Condensate	Condensate	3.66	52.44	63.2	6.82	95	4.69
T-6	40400315	Produced Water	Produced Water	8.29	27.30	63.4	0.82	95	0.42

Table 2-L: Tank Data

Include appropriate tank-flashing modeling input data. Use an addendum to this table for unlisted data categories. Unit and stack numbering must correspond throughout the application package. Use additional sheets if necessary. See reference Table 2-L2. Note: 1.00 bbl = 10.159 M3 = 42.0 gal

Tank No.	Date Installed	Materials Stored	Seal Type (refer to Table 2-LR below)	Roof Type (refer to Table 2-LR below)	Capacity		Diameter (M)	Vapor Space (M)	Color (from Table VI-C)		Paint Condition (from Table VI-C)	Annual Throughput (gal/yr)	Turn-overs (per year)
					(bbl)	(M^3)			Roof	Shell			
T-1	2017	Condensate	NA	FX	1,000	119.2	6.55	8.0	White	White	Good	24,528,000	584
T-2	2017	Condensate	NA	FX	1,000	119.2	6.55	8.0	White	White	Good	24,528,000	584
T-3	2017	Condensate	NA	FX	1,000	119.2	6.55	8.0	White	White	Good	24,528,000	584
T-4	2017	Condensate	NA	FX	1,000	119.2	6.55	8.0	White	White	Good	24,528,000	584
T-5	2017	Condensate	NA	FX	1,000	119.2	6.55	8.0	White	White	Good	24,528,000	584
T-6	2017	Produced Water	NA	FX	400	47.7	3.7	10.00	White	White	Good	1,030,097	61

Table 2-L2: Liquid Storage Tank Data Codes Reference Table

Roof Type	Seal Type, Welded Tank Seal Type		Seal Type, Riveted Tank Seal Type		Roof, Shell Color	Paint Condition
FX: Fixed Roof	**Mechanical Shoe Seal**	**Liquid-mounted resilient seal**	**Vapor-mounted resilient seal**	**Seal Type**	**WH**: White	Good
IF: Internal Floating Roof	**A**: Primary only	**A**: Primary only	**A**: Primary only	**A**: Mechanical shoe, primary only	**AS**: Aluminum (specular)	Poor
EF: External Floating Roof	**B**: Shoe-mounted secondary	**B**: Weather shield	**B**: Weather shield	**B**: Shoe-mounted secondary	**AD**: Aluminum (diffuse)	
P: Pressure	**C**: Rim-mounted secondary	**C**: Rim-mounted secondary	**C**: Rim-mounted secondary	**C**: Rim-mounted secondary	**LG**: Light Gray	
					MG: Medium Gray	
					BL: Black	
					OT: Other (specify)	

Note: 1.00 bbl = 0.159 M^3 = 42.0 gal

Table 2-M: Materials Processed and Produced (Use additional sheets as necessary.)

Material Processed				Material Produced			
Description	**Chemical Composition**	**Phase (Gas, Liquid, or Solid)**	**Quantity (specify units)**	**Description**	**Chemical Composition**	**Phase**	**Quantity (specify units)**
Natural Gas	Natural Gas	Gas	735 MMscfd	Natural Gas	Natural Gas	Gas	735 MMscfd
				Condensate	Condensate	Liquid	8000 bopd
				Produced Water	Produced Water	Liquid	303 bwpd

Table 2-N: CEM Equipment

Enter Continuous Emissions Measurement (CEM) Data in this table. If CEM data will be used as part of a federally enforceable permit condition, or used to satisfy the requirements of a state or federal regulation, include a copy of the CEM's manufacturer specification sheet in the Information Used to Determine Emissions attachment. Unit and stack numbering must correspond throughout the application package. Use additional sheets if necessary.

Stack No.	Pollutant(s)	Manufacturer	Model No.	Serial No.	Sample Frequency	Averaging Time	Range	Sensitivity	Accuracy
Not Applicable									

Table 2-O: Parametric Emissions Measurement Equipment

Unit and stack numbering must correspond throughout the application package. Use additional sheets if necessary.

Unit No.	Parameter/Pollutant Measured	Location of Measurement	Unit of Measure	Acceptable Range	Frequency of Maintenance	Nature of Maintenance	Method of Recording	Averaging Time
Not Applicable								

Table 2-P: Greenhouse Gas Emissions

Applications submitted under 20.2.70, 20.2.72, & 20.2.74 NMAC are required to complete this Table. Power plants, Title V major sources, and PSD major sources must report and calculate all GHG emissions for each unit. Applicants must report potential emission rates in short tons per year (see Section 6.a for assistance). Include GHG emissions during Startup, Shutdown, and Scheduled Maintenance in this table. For minor source facilities that are not power plants, are not Title V, or are not PSD, there are three options for reporting GHGs 1) report GHGs for each individual piece of equipment; 2) report all GHGs from a group of unit types, for example report all combustion source GHGs as a single unit and all venting GHG as a second separate unit; OR 3) check the following box ☐ By checking this box, the applicant acknowledges the total CO2e emissions are less than 75,000 tons per year.

		CO_2 ton/yr	CH_4 ton/yr	N_2O ton/yr	SF_6 ton/yr	PFC/HFC ton/yr[2]									Total GHG Mass Basis ton/yr[4]	Total CO_2e ton/yr[5]
Unit No.	**GWPs [1]**	**1**	**25**	**298**	**22,800**	**footnote 3**										
EP-2	**mass GHG**	13,577.41	0.26	0.026											13,577.69	
	CO_2e	13,577.41	6.40	7.63												13,591.44
2-EP-2	**mass GHG**	13,577.41	0.26	0.026											13,577.69	
	CO_2e	13,577.41	6.40	7.63												13,591.44
3-EP-2	**mass GHG**	13,577.41	0.26	0.026											13,577.69	
	CO_2e	13,577.41	6.40	7.63												13,591.44
EP-3A	**mass GHG**	36,008.32	0.68	0.068											36,009.07	
	CO_2e	36,008.32	16.97	20.22												36,045.51
EP-3B	**mass GHG**	43,432.35	0.82	0.082											43,433.25	
	CO_2e	43,432.35	20.46	24.39												43,477.21
EP-4	**mass GHG**	1,998.19	0.038	0.0038											1,998.23	
	CO_2e	1,998.19	0.94	1.122												2,000.25
2-EP-4	**mass GHG**	1,998.19	0.038	0.0038											1,998.23	
	CO_2e	1,998.19	0.94	1.122												2,000.25
3-EP-4	**mass GHG**	1,998.19	0.038	0.0038											1,998.23	
	CO_2e	1,998.19	0.94	1.122												2,000.25
EP-5	**mass GHG**	4,867.37	0.092	0.0092											4,867.48	
	CO_2e	4,867.37	2.29	2.73												4,872.40
2-EP-5	**mass GHG**	4,867.37	0.092	0.0092											4,867.48	
	CO_2e	4,867.37	2.29	2.73												4,872.40
3-EP-5	**mass GHG**	4,867.37	0.092	0.0092											4,867.48	
	CO_2e	4,867.37	2.29	2.73												4,872.40
EP-6	**mass GHG**	11,989.11	0.23	0.023											11,989.36	
	CO_2e	11,989.11	5.65	6.73												12,001.49
2-EP-6	**mass GHG**	11,989.11	0.23	0.023											11,989.36	
	CO_2e	11,989.11	5.65	6.73												12,001.49
EP-7	**mass GHG**	-	-	-											0.00E+00	
	CO_2e	-	-	-												0.00E+00
2-EP-7	**mass GHG**	-	-	-											0.00E+00	
	CO_2e	-	-	-												0.00E+00
3-EP-7	**mass GHG**	-	-	-											0.00E+00	
	CO_2e	-	-	-												0.00E+00

EP-8	**mass GHG**	-	-	-											0.00	
	CO_2e	-	-	-												0.00
2-EP-8	**mass GHG**	-	-	-											0.00	
	CO_2e	-	-	-												0.00
3-EP-8	**mass GHG**	-	-	-											0.00	
	CO_2e	-	-	-												0.00
EP-9	**mass GHG**	38,426.64	0.72	0.072											38,427.44	
	CO_2e	38,426.64	18.11	21.58												38,466.33
EP-1	**mass GHG**	68,089.84	65.18	0.028											68,155.05	
	CO_2e	68,089.84	1,629.48	8.49												69,727.81
2-EP-1	**mass GHG**	68,089.84	65.18	0.028											68,155.05	
	CO_2e	68,089.84	1,629.48	8.49												69,727.81
3-EP-1	**mass GHG**	68,089.84	65.18	0.028											68,155.05	
	CO_2e	68,089.84	1,629.48	8.49												69,727.81
T-1	**mass GHG**	-	-	-											0.00E+00	
	CO_2e	-	-	-												0.00E+00
T-2	**mass GHG**	-	-	-											0.00E+00	
	CO_2e	-	-	-												0.00E+00
T-3	**mass GHG**	-	-	-											0.00E+00	
	CO_2e	-	-	-												0.00E+00
T-4	**mass GHG**	-	-	-											0.00E+00	
	CO_2e	-	-	-												0.00E+00
T-5	**mass GHG**	-	-	-											0.00E+00	
	CO_2e	-	-	-												0.00E+00
T-6	**mass GHG**	1.06	1.01	-											2.07	
	CO_2e	1.06	25.26	-												26.32
COMB-1	**mass GHG**	2,990.01	0.018	0.0015											2,990.03	
	CO_2e	2,990.01	0.46	0.448												2,990.92
LOAD	**mass GHG**	-	-	-											0.00E+00	
	CO_2e	-	-	-												0.00E+00
FUG	**mass GHG**	2.71	331.02	-											333.73	
	CO_2e	2.71	8,275.43	-												8,278.14
HAUL	**mass GHG**	-	-	-											0.00E+00	
	CO_2e	-	-	-												0.00E+00
SSM-TO	**mass GHG**	852.77	0.82	-											853.60	
	CO_2e	852.77	20.62	-												873.39
MSSM	**mass GHG**	0.94	10.88	-											11.82	
	CO_2e	0.94	271.95	-												272.89
MSST	**mass GHG**	-	2.00E-07	-											2.00E-07	
	CO_2e	-	4.99E-06	-												4.99E-06
MSSB	**mass GHG**	-	-	-											0.00E+00	
	CO_2e	-	-	-												0.00E+00
Total	**mass GHG**	411,291.47	543.12	0.47											411,835	
	CO_2e	411,291.47	13,577.90	140.03												**425,009**

[1] **GWP** (Global Warming Potential): Applicants must use the most current GWPs codified in Table A-1 of 40 CFR part 98. GWPs are subject to change, therefore, applicants need to check 40 CFR 98 to confirm GWP values.

[2] For **HFCs** or **PFCs** describe the specific HFC or PFC compound and use a separate column for each individual compound.

[3] For each new compound, enter the appropriate GWP for each HFC or PFC compound from Table A-1 in 40 CFR 98.

[4] Green house gas emissions on a **mass basis** is the ton per year green house gas emission before adjustment with its GWP.

[5] **CO_2e** means Carbon Dioxide Equivalent and is calculated by multiplying the TPY mass emissions of the green house gas by its GWP.

Section 3

Application Summary

The **Application Summary** shall include a brief description of the facility and its process, the type of permit application, the applicable regulation (i.e. 20.2.72.200.A.X, or 20.2.73 NMAC) under which the application is being submitted, and any air quality permit numbers associated with this site. If this facility is to be collocated with another facility, provide details of the other facility including permit number(s). In case of a revision or modification to a facility, provide the lowest level regulatory citation (i.e. 20.2.72.219.B.1.d NMAC) under which the revision or modification is being requested. Also describe the proposed changes from the original permit, how the proposed modification will affect the facility's operations and emissions, de-bottlenecking impacts, and changes to the facility's major/minor status (both PSD & Title V).

The **Process Summary** shall include a brief description of the facility and its processes.

Startup, Shutdown, and Maintenance (SSM) routine or predictable emissions: Provide an overview of how SSM emissions are accounted for in this application. Refer to "Guidance for Submittal of Startup, Shutdown, Maintenance Emissions in Permit Applications (http://www.env.nm.gov/aqb/permit/app_form.html) for more detailed instructions on SSM emissions.

Targa Resources, LLC (Targa) owns and operates the Road Runner Gas Processing Plant located near Loving in Eddy County, NM. The site was acquired by Targa on August 1, 2022 from Lucid Energy. The most recent New Source Review (NSR) permit No. 7200-M3 was issued on February 19, 2021. Targa is proposing a significant revision to NSR Permit No.7200-M3 to authorize design changes for proposed processing trains 2 and 3 and to update representations and permit limits for existing processes at the site, including processing train 1.

The primary function of the Road Runner Gas Processing Plant is to separate natural gas (methane) from heavier (liquid) hydrocarbons, raw sweet field gas so that the gas can meet pipeline specifications. The plant has been designated a primary Standard Industrial Classification (SIC) Code of 1311. The gas is treated to remove CO_2, H_2S, water and heavy (liquid) hydrocarbons from the gas stream. Stabilized condensate is removed from the site via pipeline with the option to truck it out as needed. Produced water is trucked out form the site. The amine treater vent flows to a thermal oxidizer to remove volatile organic compound (VOC) and hazardous air pollutant (HAP) emissions.

Following is a summary of changes being proposed in this application:

- Remove processing train 4 and associated equipment from the permit. Train 4 has not been constructed.
- Increase site processing throughput.
- Update specifications and permit limits for proposed processing trains 2 and 3.
- Increase permit limits to allow the ability to process gas containing up to 5 ppm H2S.
- Update the permit representation for heaters to be equal to maximum heat output as opposed to design heat duty output.
- Add 10 tpy VOC and 1 tpy HAPs for upsets.
- Reduce the amount of routine SSM emissions represented in the permit.
- Add exempt methanol tanks.
- Increase plant fugitives to use updated counts.
- Update tank emission calculations to account for maximum hourly emissions.
- Update the number of electric compressors initially installed on existing train 1 and renumber the compressors in Form UA-2 Table 2-A for all electric compressors.
- Update representations to separately list the amine sweetening unit for each train.

This project will not trigger Prevention of Significant Deterioration (PSD) review, as the facility is currently a minor NSR source and the proposed emission changes are less than 250 tons per year (tpy) for each criteria pollutant and will remain an area source of HAPs.

Section 4

Process Flow Sheet

A **process flow sheet** and/or block diagram indicating the individual equipment, all emission points and types of control applied to those points. The unit numbering system should be consistent throughout this application.

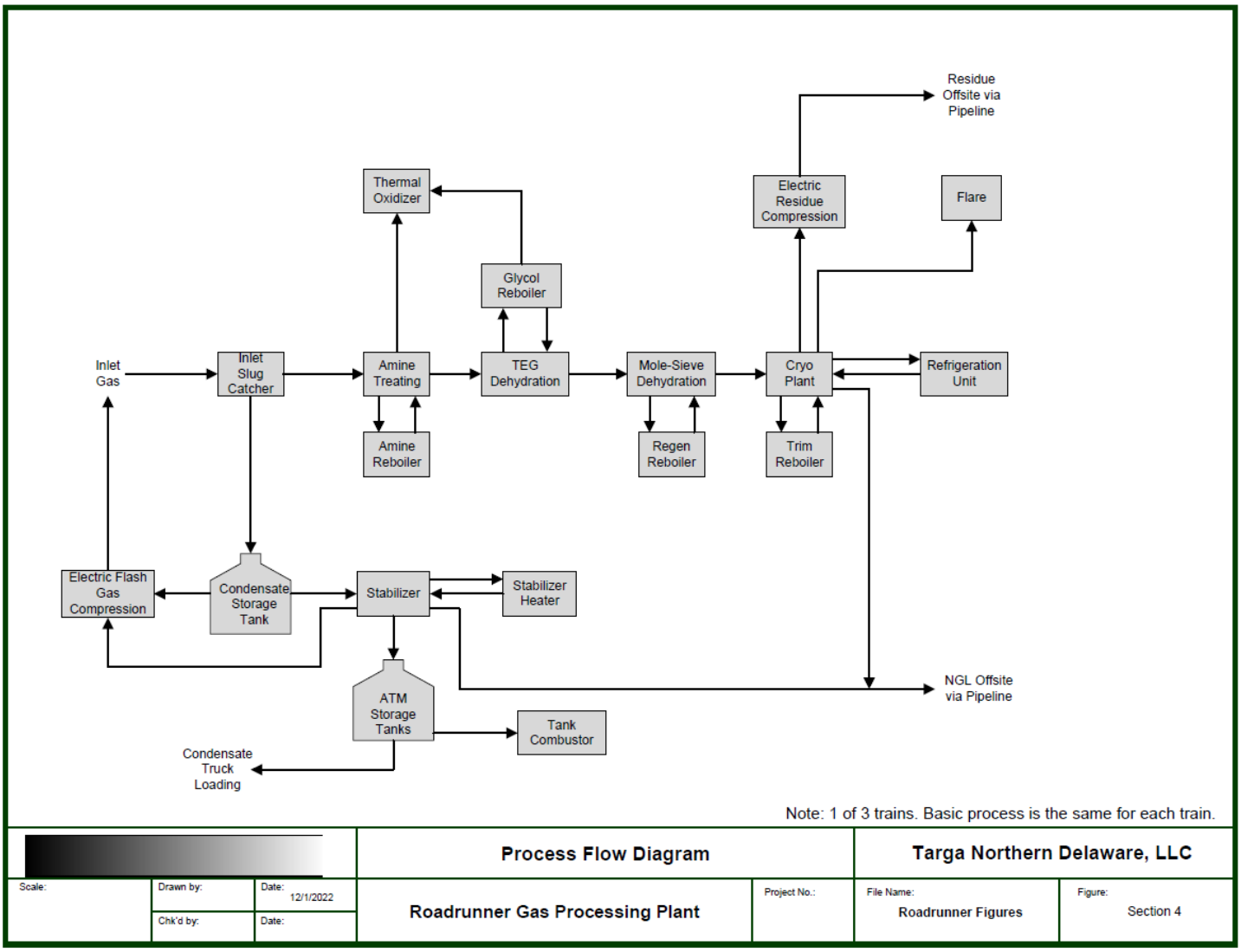

Section 5

Plot Plan Drawn To Scale

A **plot plan drawn to scale** showing emissions points, roads, structures, tanks, and fences of property owned, leased, or under direct control of the applicant. This plot plan must clearly designate the restricted area as defined in UA1, Section 1-D.12. The unit numbering system should be consistent throughout this application.

A plot plan is attached.

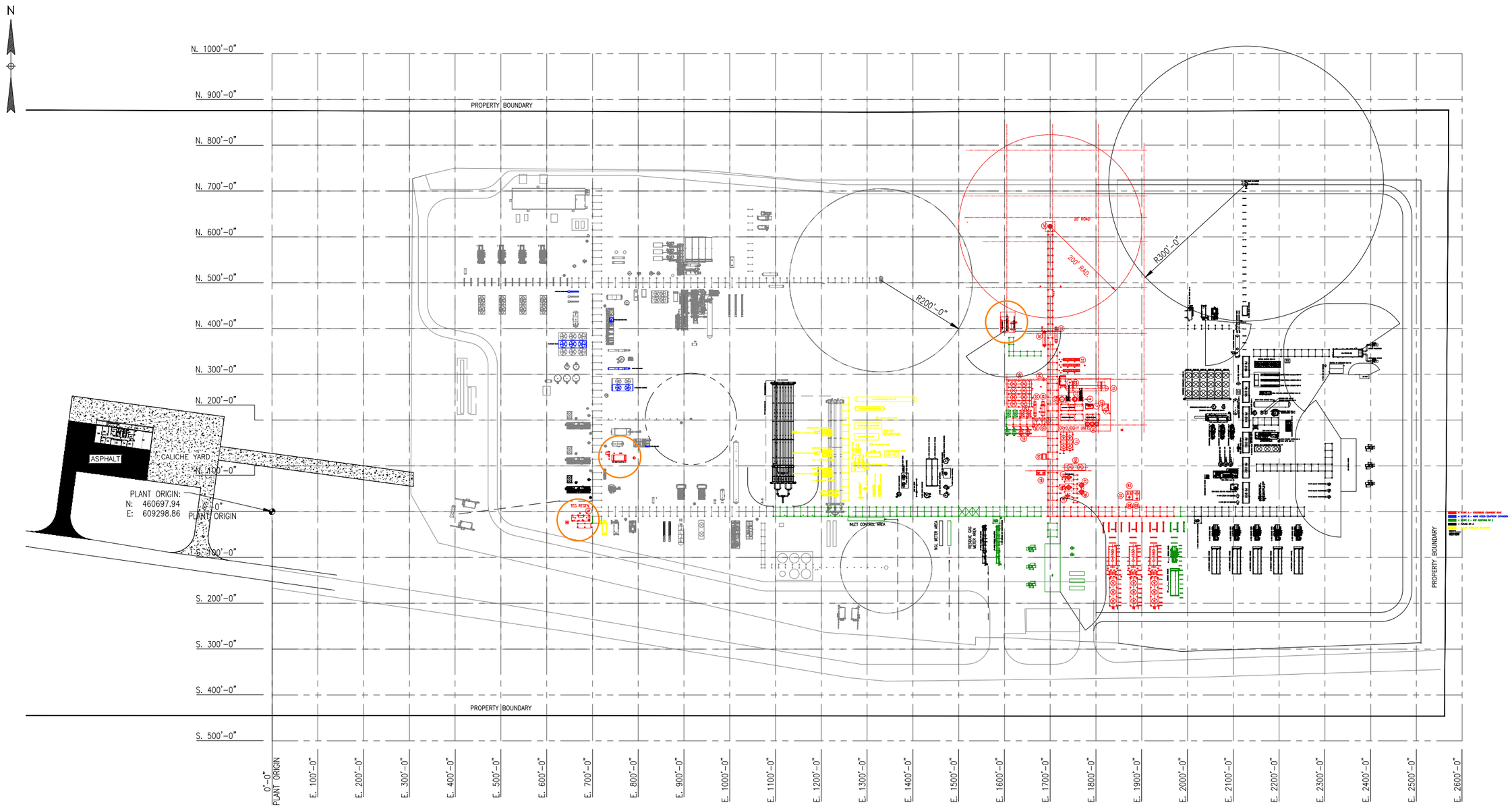

= SCOPE A – WOODSBORO EQUIPMENT MOVE

= SCOPE B – AMINE REGEN EQUIPMENT EXPANSION

= SCOPE C – BOP ADDITIONS RR 2

= FUTURE RR 3

= FUTURE STABILIZER EQUIPMENT

0 100' 200'

GRAPHIC SCALE: 1"=100'-0"

REV	CKD	APP	DATE	DESCRIPTION
P2	MLD	TP	11/09/22	ISSUED FOR INFORMATION ONLY
P1	MLD	TP	11/07/22	ISSUED FOR INFORMATION ONLY

THIS INFORMATION IS PROPRIETARY AND CONFIDENTIAL INFORMATION OF SELECT ENGINEERING AND IS INTENDED ONLY FOR THE USE OF THE CUSTOMER DESIGNATED, ANY DISSEMINATION, DISTRIBUTION, OR COPYING OF THIS INFORMATION IS UNAUTHORIZED AND STRICTLY PROHIBITED.

TARGA

SELECT Engineering
TX Registered Engineering Firm
F-13159

OVERALL SITE PLAN

ROADRUNNER GAS PLANT

TARGA No.:

DWG No.: P4956-000-1001

Rev P2

FILE PATH: P:\TARGA\P4956 WOODSBORO PLANT MOVE\DESIGN-DRAFTING\01-DRFT-DES\01.01.1000-PLOT-GA\ROADRUNNER\P4956-0000-1001

Section 6

All Calculations

Show all calculations used to determine both the hourly and annual controlled and uncontrolled emission rates. All calculations shall be performed keeping a minimum of three significant figures. Document the source of each emission factor used (if an emission rate is carried forward and not revised, then a statement to that effect is required). If identical units are being permitted and will be subject to the same operating conditions, submit calculations for only one unit and a note specifying what other units to which the calculations apply. All formulas and calculations used to calculate emissions must be submitted. The "Calculations" tab in the UA2 has been provided to allow calculations to be linked to the emissions tables. Add additional "Calc" tabs as needed. If the UA2 or other spread sheets are used, all calculation spread sheet(s) shall be submitted electronically in Microsoft Excel compatible format so that formulas and input values can be checked. Format all spread sheets and calculations such that the reviewer can follow the logic and verify the input values. Define all variables. If calculation spread sheets are not used, provide the original formulas with defined variables. Additionally, provide subsequent formulas showing the input values for each variable in the formula. All calculations, including those calculations are imbedded in the Calc tab of the UA2 portion of the application, the printed Calc tab(s), should be submitted under this section.

Tank Flashing Calculations: The information provided to the AQB shall include a discussion of the method used to estimate tank-flashing emissions, relative thresholds (i.e., NOI, permit, or major source (NSPS, PSD or Title V)), accuracy of the model, the input and output from simulation models and software, all calculations, documentation of any assumptions used, descriptions of sampling methods and conditions, copies of any lab sample analysis. If Hysis is used, all relevant input parameters shall be reported, including separator pressure, gas throughput, and all other relevant parameters necessary for flashing calculation.

SSM Calculations: It is the applicant's responsibility to provide an estimate of SSM emissions or to provide justification for not doing so. In this Section, provide emissions calculations for Startup, Shutdown, and Routine Maintenance (SSM) emissions listed in the Section 2 SSM and/or Section 22 GHG Tables and the rational for why the others are reported as zero (or left blank in the SSM/GHG Tables). Refer to "Guidance for Submittal of Startup, Shutdown, Maintenance Emissions in Permit Applications (http://www.env.nm.gov/aqb/permit/app_form.html) for more detailed instructions on calculating SSM emissions. If SSM emissions are greater than those reported in the Section 2, Requested Allowables Table, modeling may be required to ensure compliance with the standards whether the application is NSR or Title V. Refer to the Modeling Section of this application for more guidance on modeling requirements.

Glycol Dehydrator Calculations: The information provided to the AQB shall include the manufacturer's maximum design recirculation rate for the glycol pump. If GRI-Glycalc is used, the full input summary report shall be included as well as a copy of the gas analysis that was used.

Road Calculations: Calculate fugitive particulate emissions and enter haul road fugitives in Tables 2-A, 2-D and 2-E for:

1. If you transport raw material, process material and/or product into or out of or within the facility and have PER emissions greater than 0.5 tpy.
2. If you transport raw material, process material and/or product into or out of the facility more frequently than one round trip per day.

Significant Figures:
A. All emissions standards are deemed to have at least two significant figures, but not more than three significant figures.
B. At least 5 significant figures shall be retained in all intermediate calculations.
C. In calculating emissions to determine compliance with an emission standard, the following rounding off procedures shall be used:

(1) If the first digit to be discarded is less than the number 5, the last digit retained shall not be changed;
(2) If the first digit discarded is greater than the number 5, or if it is the number 5 followed by at least one digit other than the number zero, the last figure retained shall be increased by one unit; **and**
(3) If the first digit discarded is exactly the number 5, followed only by zeros, the last digit retained shall be rounded upward if it is an odd number, but no adjustment shall be made if it is an even number.
(4) The final result of the calculation shall be expressed in the units of the standard.

Control Devices: In accordance with 20.2.72.203.A(3) and (8) NMAC, 20.2.70.300.D(5)(b) and (e) NMAC, and 20.2.73.200.B(7) NMAC, the permittee shall report all control devices and list each pollutant controlled by the control device regardless if the applicant takes credit for the reduction in emissions. The applicant can indicate in this section of the

application if they chose to not take credit for the reduction in emission rates. For notices of intent submitted under 20.2.73 NMAC, only uncontrolled emission rates can be considered to determine applicability unless the state or federal Acts require the control. This information is necessary to determine if federally enforceable conditions are necessary for the control device, and/or if the control device produces its own regulated pollutants or increases emission rates of other pollutants.

Heaters and Reboilers

The facility will be equipped with several heaters and reboilers of various heat input capacities. For units EP-2, EP-4, 2-EP-4, 3-EP-4, EP-5, 2-EP-5, 3-EP-5, EP-6, and 2-EP-6, AP-42 Chapter 1.4 *Natural Gas Combustion* was used to determine emissions of nitrogen oxides (NO_x), carbon monoxide (CO), volatile organic compounds (VOC), particulate matter (PM), and hazardous air pollutants (HAPs). Sulfur dioxide emissions were calculated stoichiometrically assuming that the natural gas used as fuel in the heaters and reboilers contains a maximum H_2S content of 5 ppm based on pipeline specifications.

For unit EP-3B, manufacturer specifications were used to determine emissions of nitrogen oxides (NO_x), carbon monoxide (CO), volatile organic compounds (VOC), and particulate matter (PM). AP-42 Chapter 1.4 *Natural Gas Combustion* was used to determine emissions of and hazardous air pollutants (HAPs). Sulfur dioxide emissions were calculated stoichiometrically assuming that the natural gas used as fuel in the heaters and reboilers contains a maximum H_2S content of 5 ppm based on pipeline specifications.

For units 2-EP-2 and 3-EP-2, AP-42 Chapter 1.4 *Natural Gas Combustion* was used to determine emissions of carbon monoxide (CO), volatile organic compounds (VOC), particulate matter (PM), and hazardous air pollutants (HAPs). Sulfur dioxide emissions were calculated stoichiometrically assuming that the natural gas used as fuel in the heaters and reboilers contains a maximum H_2S content of 5 ppm based on pipeline specifications. Emissions of nitrogen oxides (NO_x) are based on the emission factor presented in 20.2.50.119.B(1) NMAC to comply with 20.2.50.119.B(3) NMAC as these units will be considered new units and must comply upon startup.

Greenhouse gas emissions from all heaters and reboilers were calculated using 40 CFR 98 Subpart C Table C-1 and Table C-2.

TEG Glycol Dehydrators

BR&E ProMax was used to determine emissions from the glycol still vent and non-condensable overheads from the BTEX condenser. Emissions from EP-7, 2-EP-7, and 3-EP-7 are controlled by the thermal oxidizer with a 99.9% destruction efficiency. Controlled emissions from the glycol dehydrators are represented at EP-7, 2-EP-7, and 3-EP-7.

Amine Units

BR&E ProMax was used to determine emissions from the amine units. Contactor overheads are routed to the glycol dehydrators for further treatment. The regenerator overheads are routed to the thermal oxidizer with a 99.9% destruction efficiency.

Thermal Oxidizer

The thermal oxidizer will control the waste gas from the glycol dehydrators as well as the waste gas from the amine units. Additional supplemental fuel is routed to the thermal oxidizer at a rate of 29,412 scf/hr. Emissions of nitrogen oxides (NO_x), carbon monoxide (CO), and particulate matter (PM) are based on manufacturer guaranteed emission factors. The thermal oxidizer operates with a destruction efficiency of 99.9%. Greenhouse gas emissions from the thermal oxidizer were calculated using 40 CFR 98 Subpart C Table C-1 and Table C-2.

Thermal Oxidizer SSM

The facility will conduct routine maintenance on the thermal oxidizer during which the thermal oxidizer will be taken offline, and emissions routed to the thermal oxidizer will instead be vented to atmosphere.

Flares

The flares at the facility (EP-1, 2-EP-1, and 3-EP-1) will flare both inlet and residue gas. The expected composition and maximum expected volumes of inlet gas and residue gas were used as the basis of the flare calculation. TNRCC RG-109 flare emission factors for low Btu gas were used to calculate emissions of nitrogen oxides (NO_x) and carbon monoxide (CO). VOC, H_2S, and SO_2 emissions are calculated based on the VOC and H_2S content of the inlet and residue gas. An assumed 98% destruction efficiency is applied to the VOC and H_2S emissions. Greenhouse gas emissions from the flares were calculated using 40 CFR 98 Subpart C Table C-1 and Table C-2 with the methodology outlined in 40 CFR 98.233(n).

Condensate Storage Tanks
Emissions from condensate storage tanks, T-1 through T-5, were determined using BR&E ProMax and a site-specific condensate analysis, dated February 3, 2022. Emissions from the condensate tanks are controlled by a combustor with a 95% destruction efficiency.

Produced Water Storage Tanks
Emissions from the produced water storage tank, T-6, were determined using BR&E ProMax. Emissions from the produced water storage tank are uncontrolled and are vented to the atmosphere.

Condensate Loading
Condensate loading emissions were calculated using the loading loss equation and variables from AP-42 Section 5.2, *Transportation and Marketing of Petroleum Liquids*. True vapor pressure of loaded liquid, molecular weight of vapor, temperature of bulk liquid, and volatile organic compound (VOC), hazardous air pollutants (HAP), and hydrogen sulfide (H_2S) mass percentage were determined with BR&E ProMax. Condensate loading is vapor balanced with the condensate tanks with a 95% capture efficiency.

Tank Combustor
The tank combustor controls emissions from the condensate tanks, condensate loading vapor balance which is routed to the condensate tanks, tank MSS which includes tank cleanings at a frequency of five tank cleanings once per year with a duration of one hour, and blowdowns. The combustor operates with a destruction efficiency of 95%. Emissions of nitrogen oxides (NO_x), carbon monoxide (CO), and particulate matter (PM) were calculated using TNRCC RG-109 and AP-42 Table 1.4-1 and Table 1.4-2. Greenhouse gas emissions from the tank combustor were calculated using 40 CFR 98 Subpart C Table C-1 and Table C-2 with the methodology outlined in 40 CFR 98.233(n).

Fugitives
The emissions from fugitive components associated with this project are calculated using emission factors from Table 2-4 of the EPA Protocol for Equipment Leak Emission estimates, November 1995. Site specific analyses for inlet gas, residue gas, and condensate were used.

Haul Road Emissions
Unpaved haul road emissions were calculated using constants from AP-42 Table 13.2.2-2 and the methodology outlined in AP-42 Chapter 13.2.2.

Miscellaneous MSS
Miscellaneous MSS emissions include routine pigging activities, routine replacement of glycol solution used in dehydration units, routine replacement of solution used in amine units, use of aerosol lubricants, piping components, and calibration activities.

MSS Blowdowns
MSS Blowdown emissions include venting emissions from blowdowns, starter vents, and any gas operated controllers present at the facility, if any.

Section 6.a

Green House Gas Emissions

(Submitting under 20.2.70, 20.2.72 20.2.74 NMAC)

Title V (20.2.70 NMAC), Minor NSR (20.2.72 NMAC), and PSD (20.2.74 NMAC) applicants must estimate and report greenhouse gas (GHG) emissions to verify the emission rates reported in the public notice, determine applicability to 40 CFR 60 Subparts, and to evaluate Prevention of Significant Deterioration (PSD) applicability. GHG emissions that are subject to air permit regulations consist of the sum of an aggregate group of these six greenhouse gases: carbon dioxide (CO_2), nitrous oxide (N_2O), methane (CH_4), hydrofluorocarbons (HFCs), perfluorocarbons (PFCs), and sulfur hexafluoride (SF_6).

Calculating GHG Emissions:

1. Calculate the ton per year (tpy) GHG mass emissions and GHG CO_2e emissions from your facility.
2. GHG mass emissions are the sum of the total annual tons of greenhouse gases without adjusting with the global warming potentials (GWPs). GHG CO_2e emissions are the sum of the mass emissions of each individual GHG multiplied by its GWP found in Table A-1 in 40 CFR 98 Mandatory Greenhouse Gas Reporting.
3. Emissions from routine or predictable start up, shut down, and maintenance must be included.
4. Report GHG mass and GHG CO_2e emissions in Table 2-P of this application. Emissions are reported in **short** tons per year and represent each emission unit's Potential to Emit (PTE).
5. All Title V major sources, PSD major sources, and all power plants, whether major or not, must calculate and report GHG mass and CO2e emissions for each unit in Table 2-P.
6. For minor source facilities that are not power plants, are not Title V, and are not PSD there are three options for reporting GHGs in Table 2-P: 1) report GHGs for each individual piece of equipment; 2) report all GHGs from a group of unit types, for example report all combustion source GHGs as a single unit and all venting GHGs as a second separate unit; 3) or check the following ☐ By checking this box, the applicant acknowledges the total CO2e emissions are less than 75,000 tons per year.

Sources for Calculating GHG Emissions:

- Manufacturer's Data
- AP-42 Compilation of Air Pollutant Emission Factors at http://www.epa.gov/ttn/chief/ap42/index.html
- EPA's Internet emission factor database WebFIRE at http://cfpub.epa.gov/webfire/
- 40 CFR 98 Mandatory Green House Gas Reporting except that tons should be reported in short tons rather than in metric tons for the purpose of PSD applicability.
- API Compendium of Greenhouse Gas Emissions Methodologies for the Oil and Natural Gas Industry. August 2009 or most recent version.
- Sources listed on EPA's NSR Resources for Estimating GHG Emissions at http://www.epa.gov/nsr/clean-air-act-permitting-greenhouse-gases:

Global Warming Potentials (GWP):
Applicants must use the Global Warming Potentials codified in Table A-1 of the most recent version of 40 CFR 98 Mandatory Greenhouse Gas Reporting. The GWP for a particular GHG is the ratio of heat trapped by one unit mass of the GHG to that of one unit mass of CO_2 over a specified time period.

"Greenhouse gas" for the purpose of air permit regulations is defined as the aggregate group of the following six gases: carbon dioxide, nitrous oxide, methane, hydrofluorocarbons, perfluorocarbons, and sulfur hexafluoride. **(20.2.70.7 NMAC, 20.2.74.7 NMAC).** You may also find GHGs defined in 40 CFR 86.1818-12(a).

Metric to Short Ton Conversion:
Short tons for GHGs and other regulated pollutants are the standard unit of measure for PSD and title V permitting programs. 40 CFR 98 Mandatory Greenhouse Reporting requires metric tons.
1 metric ton = 1.10231 short tons (per Table A-2 to Subpart A of Part 98 – Units of Measure Conversions)

TARGA

Targa Midstream Services LLC - Roadrunner Gas Processing Plant

Emission Summary

Controlled Emissions

Unit ID	Equipment Description	NO_X		CO		VOC		SO_2		TSP^2		PM_{10}^2		$PM_{2.5}^2$		H_2S		Total HAP		Benzene		CO_2	CH_4	N_2O	CO2e
		lb/hr	ton/yr	lb/hr	ton/yr	lb/hr	ton/yr	lb/hr	ton/yr	lb/hr	ton/yr	lb/hr	ton/yr	lb/hr	ton/yr	lb/hr	ton/yr	lb/hr	ton/yr	lb/hr	ton/yr	ton/yr	ton/yr	ton/yr	ton/yr
EP-2	Trim Reboiler	2.60	11.38	2.18	9.56	0.14	0.63	0.022	0.10	0.20	0.86	0.20	0.86	0.20	0.86	-	-	<0.01	<0.01	<0.01	<0.01	13,577.41	0.26	0.03	13,591.44
2-EP-2	Trim Reboiler	0.84	3.68	2.18	9.56	0.14	0.63	0.022	0.10	0.20	0.86	0.20	0.86	0.20	0.86	-	-	<0.01	<0.01	<0.01	<0.01	13,577.41	0.26	0.03	13,591.44
3-EP-2	Trim Reboiler	0.84	3.68	2.18	9.56	0.14	0.63	0.022	0.10	0.20	0.86	0.20	0.86	0.20	0.86	-	-	<0.01	<0.01	<0.01	<0.01	13,577.41	0.26	0.03	13,591.44
EP-3A	Amine Reboiler	2.23	9.77	4.53	19.83	0.38	1.66	0.06	0.26	0.52	2.29	0.52	2.29	0.52	2.29	-	-	<0.01	0.02	<0.01	<0.01	36,008.32	0.68	0.07	36,045.51
EP-3B	Amine Reboiler	0.34	1.49	3.48	15.22	1.61	7.05	0.07	0.31	1.10	4.83	1.10	4.83	1.10	4.83	-	-	<0.01	0.03			43,432.35	0.82	0.08	43,477.21
EP-4	Glycol Reboiler	0.38	1.67	0.32	1.41	0.021	0.092	<0.01	0.01	0.029	0.13	0.029	0.13	0.029	0.13	-	-	<0.01	<0.01	<0.01	<0.01	1,998.19	0.04	<0.01	2,000.25
2-EP-4	Glycol Reboiler	0.38	1.67	0.32	1.41	0.021	0.092	<0.01	0.014	0.029	0.13	0.029	0.13	0.029	0.13	-	-	<0.01	<0.01	<0.01	<0.01	1,998.19	0.04	<0.01	2,000.25
3-EP-4	Glycol Reboiler	0.38	1.67	0.32	1.41	0.021	0.092	<0.01	0.014	0.029	0.13	0.029	0.13	0.029	0.13	-	-	<0.01	<0.01	<0.01	<0.01	1,998.19	0.04	<0.01	2,000.25
EP-5	Regen Reboiler	0.93	4.08	0.78	3.43	0.05	0.22	<0.01	0.035	0.071	0.31	0.071	0.31	0.071	0.31	-	-	<0.01	<0.01	<0.01	<0.01	4,867.37	0.09	<0.01	4,872.40
2-EP-5	Regen Reboiler	0.93	4.08	0.78	3.43	0.05	0.22	<0.01	0.035	0.071	0.31	0.071	0.31	0.071	0.31	-	-	<0.01	<0.01	<0.01	<0.01	4,867.37	0.09	<0.01	4,872.40
3-EP-5	Regen Reboiler	0.93	4.08	0.78	3.43	0.05	0.22	<0.01	0.035	0.071	0.31	0.071	0.31	0.071	0.31	-	-	<0.01	<0.01	<0.01	<0.01	4,867.37	0.09	<0.01	4,872.40
EP-6	Stabilizer Heater	2.29	10.05	1.93	8.44	0.13	0.55	0.02	0.09	0.17	0.76	0.17	0.76	0.17	0.76	-	-	<0.01	<0.01	<0.01	<0.01	11,989.11	0.23	0.02	12,001.49
2-EP-6	Stabilizer Heater	2.29	10.05	1.93	8.44	0.13	0.55	0.02	0.09	0.17	0.76	0.17	0.76	0.17	0.76	-	-	<0.01	<0.01	<0.01	<0.01	11,989.11	0.23	0.02	12,001.49
EP-7	Glycol Dehydrator (99.9% Control)	Emissions represented at the thermal oxidizer (Unit EP-9)																							
2-EP-7	Glycol Dehydrator (99.9% Control)	Emissions represented at the thermal oxidizer (Unit EP-9)																							
3-EP-7	Glycol Dehydrator (99.9% Control)	Emissions represented at the thermal oxidizer (Unit EP-9)																							
EP-8	Amine Vent (99.9% Control)	Emissions represented at the thermal oxidizer (Unit EP-9)																							
2-EP-8	Amine Vent (99.9% Control)	Emissions represented at the thermal oxidizer (Unit EP-9)																							
3-EP-8	Amine Vent (99.9% Control)	Emissions represented at the thermal oxidizer (Unit EP-9)																							
EP-9	Thermal Oxidizer	6.12	26.81	2.98	13.05	0.53	2.32	26.66	116.79	0.60	2.63	0.60	2.63	0.60	2.63	0.014	0.062	0.28	1.24	0.13	0.58	38,426.64	0.72	0.07	38,466.33
EP-1	Flare (SSM)	1,578.35	19.90	3,150.97	39.72	2,484.70	29.82	828.55	9.98	-	-	-	-	-	-	8.98	0.11	58.10	0.70	-	-	68,089.84	65.18	0.03	69,727.81
2-EP-1	Flare (SSM)	1,578.29	19.66	3,150.87	39.26	2,484.70	29.82	828.55	9.98	-	-	-	-	-	-	8.98	0.11	58.10	0.70	-	-	68,089.84	65.18	0.03	69,727.81
3-EP-1	Flare (SSM)	1,578.16	19.08	3,150.60	38.09	2,484.70	29.82	828.54	9.95	-	-	-	-	-	-	8.98	0.11	58.10	0.70	-	-	68,089.84	65.18	0.03	69,727.81
T-1	Condensate Storage Tank (95% Control)	Emissions represented at the combustor (Unit COMB-1)																							
T-2	Condensate Storage Tank (95% Control)	Emissions represented at the combustor (Unit COMB-1)																							
T-3	Condensate Storage Tank (95% Control)	Emissions represented at the combustor (Unit COMB-1)																							
T-4	Condensate Storage Tank (95% Control)	Emissions represented at the combustor (Unit COMB-1)																							
T-5	Condensate Storage Tank (95% Control)	Emissions represented at the combustor (Unit COMB-1)																							
T-6	Waste Water Tank	-	-	-	-	0.14	0.63	-	-	-	-	-	-	-	-	<0.01	<0.01	<0.01	0.022	<0.01	0.02	1.06	1.01	-	26.32
COMB-1	Tank Combustor	7.73	3.08	15.43	6.16	37.59	4.26	0.16	<0.01	0.42	0.17	0.42	0.17	0.42	0.17	<0.01	<0.01	3.43	4.74	3.43	4.74	2,990.01	0.02	<0.01	2,990.92
LOAD	Condensate Loading Emissions	-	-	-	-	12.88	54.41	-	-	-	-	-	-	-	-	-	-	1.16	4.58	-	-	-	-	-	-
FUG	Fugitive Emissions	-	-	-	-	26.37	115.48	-	-	-	-	-	-	-	-	<0.01	<0.01	1.83	8.03	-	-	2.71	331.02	<0.01	8,278.14
HAUL	Haul	-	-	-	-	-	-	-	-	0.41	1.46	0.11	0.37	0.011	0.037	-	-	-	-	-	-	-	-	-	-
SSM-TO	SSM Thermal Oxidizer	-	-	-	-	326.15	3.26	-	-	-	-	-	-	-	-	14.17	0.14	216.77	2.17	-	-	852.77	0.82	-	873.39
MSSM	MSS Miscellaneous	-	-	-	-	276.65	4.12	-	-	-	-	-	-	-	-	0.01	<0.01	15.05	0.22	-	-	0.94	10.88	-	272.89
MSST	Tank Degassing	-	-	-	-	38.16	0.03	-	-	-	-	-	-	-	-	-	-	20.01	<0.01	16.75	<0.01	-	<0.01	-	<0.01
MSSB	MSS Blowdowns	Emissions represented at the combustor (Unit COMB-1)																							
Totals		**4,764.02**	**155.90**	**9,492.56**	**231.39**	**8,175.46**	**286.61**	**2,512.72**	**147.88**	**4.30**	**16.81**	**3.99**	**15.72**	**3.89**	**15.39**	**41.15**	**0.54**	**432.86**	**23.21**	**20.32**	**5.34**	**411,291.47**	**543.12**	**0.47**	**425,009.40**
Totals without Fugitives		**4,764.02**	**155.90**	**9,492.56**	**231.39**	**8,149.10**	**171.13**	**2,512.72**	**147.88**	**4.30**	**16.81**	**3.99**	**15.72**	**3.89**	**15.39**	**41.15**	**0.54**	**431.03**	**15.18**	**20.32**	**5.34**	**411,288.76**	**212.10**	**0.47**	**416,731.26**

Uncontrolled Emissions

Unit ID	Equipment Description	NO_X		CO		VOC		SO_2		TSP^2		$PM_{10}{}^2$		$PM_{2.5}{}^2$		H_2S		Total HAP		Benzene		CO_2	CH_4	N_2O	CO2e
		lb/hr	ton/yr	lb/hr	ton/yr	lb/hr	ton/yr	lb/hr	ton/yr	lb/hr	ton/yr	lb/hr	ton/yr	lb/hr	ton/yr	lb/hr	ton/yr	lb/hr	ton/yr	lb/hr	ton/yr	ton/yr	ton/yr	ton/yr	ton/yr
EP-2	Trim Reboiler	2.60	11.38	2.18	9.56	0.14	0.63	0.02	0.10	0.20	0.86	0.20	0.86	0.20	0.86	-	-	<0.01	<0.01	<0.01	<0.01	13,577.41	0.26	0.03	13,591.44
2-EP-2	Trim Reboiler	0.84	3.68	2.18	9.56	0.14	0.63	0.02	0.10	0.20	0.86	0.20	0.86	0.20	0.86	-	-	<0.01	<0.01	<0.01	<0.01	13,577.41	0.26	0.03	13,591.44
3-EP-2	Trim Reboiler	0.84	3.68	2.18	9.56	0.14	0.63	0.02	0.10	0.20	0.86	0.20	0.86	0.20	0.86	-	-	<0.01	<0.01	<0.01	<0.01	13,577.41	0.26	0.03	13,591.44
EP-3A	Amine Reboiler	2.23	9.77	4.53	19.83	0.38	1.66	0.06	0.26	0.52	2.29	0.52	2.29	0.52	2.29	-	-	<0.01	0.02	<0.01	<0.01	36,008.32	0.68	0.07	36,045.51
EP-3B	Amine Reboiler	0.34	1.49	3.48	15.22	1.61	7.05	0.07	0.31	1.10	4.83	1.10	4.83	1.10	4.83	-	-	<0.01	0.03	<0.01	<0.01	43,432.35	0.82	0.08	43,477.21
EP-4	Glycol Reboiler	0.38	1.67	0.32	1.41	0.02	0.09	<0.01	0.01	0.03	0.13	0.03	0.13	0.03	0.13	-	-	<0.01	<0.01	<0.01	<0.01	1,998.19	0.04	<0.01	2,000.25
2-EP-4	Glycol Reboiler	0.38	1.67	0.32	1.41	0.02	0.09	<0.01	0.01	0.03	0.13	0.03	0.13	0.03	0.13	-	-	<0.01	<0.01	<0.01	<0.01	1,998.19	0.04	<0.01	2,000.25
3-EP-4	Glycol Reboiler	0.38	1.67	0.32	1.41	0.02	0.09	<0.01	0.01	0.03	0.13	0.03	0.13	0.03	0.13	-	-	<0.01	<0.01	<0.01	<0.01	1,998.19	0.04	<0.01	2,000.25
EP-5	Regen Reboiler	0.93	4.08	0.78	3.43	0.05	0.22	<0.01	0.03	0.07	0.31	0.07	0.31	0.07	0.31	-	-	<0.01	<0.01	<0.01	<0.01	4,867.37	0.09	<0.01	4,872.40
2-EP-5	Regen Reboiler	0.93	4.08	0.78	3.43	0.05	0.22	<0.01	0.03	0.07	0.31	0.07	0.31	0.07	0.31	-	-	<0.01	<0.01	<0.01	<0.01	4,867.37	0.09	<0.01	4,872.40
3-EP-5	Regen Reboiler	0.93	4.08	0.78	3.43	0.05	0.22	<0.01	0.03	0.07	0.31	0.07	0.31	0.07	0.31	-	-	<0.01	<0.01	<0.01	<0.01	4,867.37	0.09	<0.01	4,872.40
EP-6	Stabilizer Heater	2.29	10.05	1.93	8.44	0.13	0.55	0.02	0.09	0.17	0.76	0.17	0.76	0.17	0.76	-	-	<0.01	<0.01	<0.01	<0.01	11,989.11	0.23	0.02	12,001.49
2-EP-6	Stabilizer Heater	2.29	10.05	1.93	8.44	0.13	0.55	0.02	0.09	0.17	0.76	0.17	0.76	0.17	0.76	-	-	<0.01	<0.01	<0.01	<0.01	11,989.11	0.23	0.02	12,001.49
EP-7	Glycol Dehydrator (99.9% Control)	-	-	-	-	102.15	447.40	-	-	-	-	-	-	-	-	<0.01	<0.01	33.28	145.74	14.19	62.16	-	20.09	-	502.18
2-EP-7	Glycol Dehydrator (99.9% Control)	-	-	-	-	102.15	447.40	-	-	-	-	-	-	-	-	<0.01	<0.01	33.28	145.75	14.19	62.15	-	20.12	-	502.99
3-EP-7	Glycol Dehydrator (99.9% Control)	-	-	-	-	102.15	447.40	-	-	-	-	-	-	-	-	<0.01	<0.01	33.28	145.74	14.19	62.16	-	20.09	-	502.18
EP-8	Amine Vent (99.9% Control)	-	-	-	-	74.67	327.04	-	-	-	-	-	-	-	-	4.72	20.68	61.17	267.90	<0.01	<0.01	124,504.53	114.30	-	127,361.95
2-EP-8	Amine Vent (99.9% Control)	-	-	-	-	74.67	327.04	-	-	-	-	-	-	-	-	4.72	20.68	61.17	267.90	<0.01	<0.01	124,504.53	114.30	-	127,361.95
T-5	Condensate Storage Tank (95% Control)	-	-	-	-	32.12	16.87	-	-	-	-	-	-	-	-	<0.01	<0.01	2.89	1.42	-	-	-	-	-	-
T-6	Waste Water Tank	-	-	-	-	0.14	0.63	-	-	-	-	-	-	-	-	<0.01	<0.01	<0.01	0.02	<0.01	0.02	1.06	1.01	-	26.32
COMB-1	Tank Combustor	-	-	-	-	-	-	-	-	-	-	-	-	-	-	-	-	-	-	-	-	2,990.01	0.02	<0.01	2,990.92
LOAD	Condensate Loading Emissions	-	-	-	-	257.50	1,088.27	-	-	-	-	-	-	-	-	-	-	23.116	91.63	-	-	-	-	-	-
FUG	Fugitive Emissions	-	-	-	-	26.37	115.48	-	-	-	-	-	-	-	-	<0.01	<0.01	1.83	8.03	-	-	2.71	331.02	<0.01	8,278.14
HAUL	Haul	-	-	-	-	-	-	-	-	0.41	1.46	0.11	0.37	0.011	0.037	-	-	-	-	-	-	-	-	-	-
SSM-TO	SSM Thermal Oxidizer	-	-	-	-	326.15	3.26	-	-	-	-	-	-	-	-	14.17	0.14	216.77	2.17	-	-	852.77	0.82	-	873.39
MSSM	MSS Miscellaneous	-	-	-	-	276.65	4.12	-	-	-	-	-	-	-	-	-	-	-	-	-	-	-	-	-	-
MSST	Tank Degassing	-	-	-	-	38.16	0.03	-	-	-	-	-	-	-	-	-	-	20.01	<0.01	16.75	<0.01	-	<0.01	-	<0.01
MSSB	MSS Blowdowns	-	-	-	-	590.99	11.82	-	-	-	-	-	-	-	-	-	-	1.17	0.01	32.16	0.64	-	-	-	-
Totals		**15.80**	**69.19**	**22.55**	**98.75**	**2,209.89**	**3,643.91**	**0.29**	**1.25**	**3.28**	**14.02**	**2.97**	**12.93**	**2.88**	**12.59**	**28.36**	**62.21**	**560.68**	**1,350.02**	**91.49**	**187.12**	**542,107.95**	**739.16**	**0.31**	**560,679.94**

Targa Midstream Services LLC - Roadrunner Gas Processing Plant

Heaters

Emission Unit: **EP-3B**

Description:

Heater/Boiler rating (MMBtu/hr):	84.77	
Rating above is **(select from list)**:	*below 100 MMBtu/hr, uncontrolled*	(assume uncontrolled, unless specifically stated otherwise)
Operating hours/year:	8,760	
Fuel Heat Value, LHV (Btu/SCF):	1020.0	

pollutant	emission factor (lb/MMBTU)	lb/hr	tpy
VOC	0.019	1.611	7.055
NOx	**0.004**	0.339	1.485
CO	0.041	3.476	15.223
PM	0.013	1.102	4.827
Benzene	2.10E-03	1.75E-04	7.64E-04
Toluene	3.40E-03	2.83E-04	1.24E-03
Formaldehyde	7.50E-02	6.23E-03	2.73E-02
SO_2	0	0.00E+00	0.00E+00

If the heater/boiler is fueled by Sour Gas, <u>cannot</u> use emission factors above to calculate SO_2 emissions, must use SO_2 mass balance:

SO_2 Mass Balance calculation:	
Fuel H_2S content (mol %) =	**0.0005**
SO_2 produced (lb/hr) =	**0.0703**
SO_2 produced (tpy) =	**0.3080**

assumptions:

SO2 MW	64.06	lb/lb-mole
Ideal Gas Law	378.61	SCF/lb-mole

EP-2 Emissions Calculations (fueled by natural gas)

Heater/Boiler rating (MMBtu/hr):	26.5	
Rating above is **(select from list)**:	*below 100 MMBtu/hr, uncontrolled*	(assume uncontrolled, unless specifically stated otherwise)
Operating hours/year:	8760	
Fuel Heat Value, LHV (Btu/SCF):	1020.0	

pollutant	emission factor (lb/MMCF)	lb/hr	tpy
VOC	5.5	0.143	0.626
NOx	**100**	2.598	11.379
CO	84	2.182	9.559
PM	7.6	0.197	0.865
Benzene	2.10E-03	5.46E-05	2.39E-04
Toluene	3.40E-03	8.83E-05	3.87E-04
Formaldehyde	7.50E-02	1.95E-03	8.53E-03
SO_2	0	0.00E+00	0.00E+00

If the heater/boiler is fueled by Sour Gas, cannot use emission factors above to calculate SO_2 emissions, must use SO_2 mass balance:

SO_2 Mass Balance calculation:	
Fuel H_2S content (mol %) =	**0.0005**
SO_2 produced (lb/hr) =	**0.0220**
SO_2 produced (tpy) =	**0.0963**

assumptions:

SO2 MW	64.06	lb/lb-mole
Ideal Gas Law	378.61	SCF/lb-mole

2-EP-2, 3-EP-2 and Emissions Calculations (fueled by natural gas)

Heater/Boiler rating (MMBtu/hr):	26.5
Flow Rate (dscfm):	3846.92
Rating above is **(select from list)**:	*below 100 MMBtu/hr, uncontrolled*
Operating hours/year:	8760
Fuel Heat Value, LHV (Btu/SCF):	1020.0

(assume uncontrolled, unless specifically stated otherwise)

pollutant	emission factor (lb/MMCF)	emission factor (ppmv)	lb/hr	tpy
VOC	5.5		0.143	0.626
NOx		**30**	0.841	3.685
CO	84		2.182	9.559
PM	7.6		0.197	0.865
Benzene	2.10E-03		5.46E-05	2.39E-04
Toluene	3.40E-03		8.83E-05	3.87E-04
Formaldehyde	7.50E-02		1.95E-03	8.53E-03
SO_2	0		0.00E+00	0.00E+00

If the heater/boiler is fueled by Sour Gas, <u>cannot</u> use emission factors above to calculate SO_2 emissions, must use SO_2 mass balance:

SO_2 Mass Balance calculation:	
Fuel H_2S content (mol %) =	**0.0005**
SO_2 produced (lb/hr) =	**0.0220**
SO_2 produced (tpy) =	**0.0963**

assumptions:		
SO2 MW	64.06	lb/lb-mole
NO2 MW	46	lb/lb-mole
CO MW	28	lb/lb-mole
Ideal Gas Law	378.61	SCF/lb-mole
F_d^2	8710	dscf/MMBtu

EP-3A Emissions Calculations (fueled by natural gas)

Heater/Boiler rating (MMBtu/hr):	70.28
Flow Rate (dscfm):	10202.31
Rating above is **(select from list)**:	*below 100 MMBtu/hr, uncontrolled*
Operating hours/year:	8760
Fuel Heat Value, LHV (Btu/SCF):	1020.0

(assume uncontrolled, unless specifically stated otherwise)

pollutant	emission factor (lb/MMCF)	emission factor (ppmv)	lb/hr	tpy
VOC	5.5		0.379	1.660
NOx[1]	-	**30**	2.231	9.773
CO[1]	-	100	4.527	19.829
PM	7.6		0.524	2.294
Benzene	2.10E-03		1.45E-04	6.34E-04
Toluene	3.40E-03		2.34E-04	1.03E-03
Formaldehyde	7.50E-02		5.17E-03	2.26E-02
SO_2	0		0.00E+00	0.00E+00

If the heater/boiler is fueled by Sour Gas, cannot use emission factors above to calculate SO_2 emissions, must use SO_2 mass balance:

SO_2 Mass Balance calculation:	
Fuel H_2S content (mol %) =	**0.0005**
SO_2 produced (lb/hr) =	**0.0583**
SO_2 produced (tpy) =	**0.2553**

calculation factors		
SO2 MW	64.06	lb/lb-mole
NO2 MW	46	lb/lb-mole
CO MW	28	lb/lb-mole
Ideal Gas Law	378.61	SCF/lb-mole
F_d[2]	8710	dscf/MMBtu

[1] Manufacturer specific emission factors per Devco corrected for 3% O_2

[2] Factor per 40 CFR 40 Appx A Method 19 Table 19-2

EP-4 Emissions Calculations (fueled by natural gas)

Heater/Boiler rating (MMBtu/hr):	3.90
Rating above is **(select from list)**:	*below 100 MMBtu/hr, uncontrolled*
Operating hours/year:	8760
Fuel Heat Value, LHV (Btu/SCF):	1020.0

(assume uncontrolled, unless specifically stated otherwise)

pollutant	emission factor (lb/MMCF)	lb/hr	tpy
VOC	5.5	0.021	0.092
NOx	**100**	0.382	1.675
CO	84	0.321	1.407
PM	7.6	0.029	0.127
Benzene	2.10E-03	8.03E-06	3.52E-05
Toluene	3.40E-03	1.30E-05	5.69E-05
Formaldehyde	7.50E-02	2.87E-04	1.26E-03
SO_2	0	0.00E+00	0.00E+00

If the heater/boiler is fueled by Sour Gas, <u>cannot</u> use emission factors above to calculate SO_2 emissions, must use SO_2 mass balance:

SO_2 Mass Balance calculation:	
Fuel H_2S content (mol %) =	**0.0005**
SO_2 produced (lb/hr) =	**0.0032**
SO_2 produced (tpy) =	**0.0142**

assumptions:		
SO2 MW	64.06	lb/lb-mole
Ideal Gas Law	378.61	SCF/lb-mole

2-EP-4 and 3-EP-4 Emissions Calculations (fueled by natural gas)

Heater/Boiler rating (MMBtu/hr):	3.90
Rating above is **(select from list)**:	*below 100 MMBtu/hr, uncontrolled*
Operating hours/year:	8760
Fuel Heat Value, LHV (Btu/SCF):	1020.0

(assume uncontrolled, unless specifically stated otherwise)

pollutant	emission factor (lb/MMCF)	lb/hr	tpy
VOC	5.5	0.021	0.092
NOx	**100**	0.382	1.675
CO	84	0.321	1.407
PM	7.6	0.029	0.127
Benzene	2.10E-03	8.03E-06	3.52E-05
Toluene	3.40E-03	1.30E-05	5.69E-05
Formaldehyde	7.50E-02	2.87E-04	1.26E-03
SO_2	0	0.00E+00	0.00E+00

If the heater/boiler is fueled by Sour Gas, <u>cannot</u> use emission factors above to calculate SO_2 emissions, must use SO_2 mass balance:

SO_2 Mass Balance calculation:	
Fuel H_2S content (mol %) =	**0.0005**
SO_2 produced (lb/hr) =	**0.0032**
SO_2 produced (tpy) =	**0.0142**

assumptions:		
SO2 MW	64.06	lb/lb-mole
Ideal Gas Law	378.61	SCF/lb-mole

EP-5 Emissions Calculations (fueled by natural gas)

Heater/Boiler rating (MMBtu/hr):	9.5
Rating above is **(select from list)**:	*below 100 MMBtu/hr, uncontrolled*
Operating hours/year:	8760
Fuel Heat Value, LHV (Btu/SCF):	1020.0

(assume uncontrolled, unless specifically stated otherwise)

pollutant	emission factor (lb/MMCF)	lb/hr	tpy
VOC	5.5	0.051	0.224
NOx	**100**	0.931	4.079
CO	84	0.782	3.427
PM	7.6	0.071	0.310
Benzene	2.10E-03	1.96E-05	8.57E-05
Toluene	3.40E-03	3.17E-05	1.39E-04
Formaldehyde	7.50E-02	6.99E-04	3.06E-03
SO_2	0	0.00E+00	0.00E+00

If the heater/boiler is fueled by Sour Gas, <u>cannot</u> use emission factors above to calculate SO_2 emissions, must use SO_2 mass balance:

SO_2 Mass Balance calculation:	
Fuel H_2S content (mol %) =	**0.0005**
SO_2 produced (lb/hr) =	**0.0079**
SO_2 produced (tpy) =	**0.0345**

assumptions:

SO2 MW	64.06	lb/lb-mole
Ideal Gas Law	378.61	SCF/lb-mole

2-EP-5 and 3-EP-5 Emissions Calculations (fueled by natural gas)

Heater/Boiler rating (MMBtu/hr):	9.5
Rating above is **(select from list)**:	*below 100 MMBtu/hr, uncontrolled*
Operating hours/year:	8760
Fuel Heat Value, LHV (Btu/SCF):	1020.0

(assume uncontrolled, unless specifically stated otherwise)

pollutant	emission factor (lb/MMCF)	lb/hr	tpy
VOC	5.5	0.051	0.224
NOx	**100**	0.931	4.079
CO	84	0.782	3.427
PM	7.6	0.071	0.310
Benzene	2.10E-03	1.96E-05	8.57E-05
Toluene	3.40E-03	3.17E-05	1.39E-04
Formaldehyde	7.50E-02	6.99E-04	3.06E-03
SO_2	0	0.00E+00	0.00E+00

If the heater/boiler is fueled by Sour Gas, <u>cannot</u> use emission factors above to calculate SO_2 emissions, must use SO_2 mass balance:

SO_2 Mass Balance calculation:	
Fuel H_2S content (mol %) =	**0.0005**
SO_2 produced (lb/hr) =	**0.0079**
SO_2 produced (tpy) =	**0.0345**

assumptions:		
SO2 MW	64.06	lb/lb-mole
Ideal Gas Law	378.61	SCF/lb-mole

EP-6 and 2-EP-6 Emissions Calculations (fueled by natural gas)

Heater/Boiler rating (MMBtu/hr):	23.4	
Rating above is **(select from list)**:	*below 100 MMBtu/hr, uncontrolled*	(assume uncontrolled, unless specifically stated otherwise)
Operating hours/year:	8760	
Fuel Heat Value, LHV (Btu/SCF):	1020.0	

pollutant	emission factor (lb/MMCF)	lb/hr	tpy
VOC	5.5	0.126	0.553
NOx	**100**	2.294	10.048
CO	84	1.927	8.441
PM	7.6	0.174	0.764
Benzene	2.10E-03	4.82E-05	2.11E-04
Toluene	3.40E-03	7.80E-05	3.42E-04
Formaldehyde	7.50E-02	1.72E-03	7.54E-03
SO_2	0	0.00E+00	0.00E+00

If the heater/boiler is fueled by Sour Gas, <u>cannot</u> use emission factors above to calculate SO_2 emissions, must use SO_2 mass balance:

SO_2 Mass Balance calculation:	
Fuel H_2S content (mol %) =	**0.0005**
SO_2 produced (lb/hr) =	**0.0194**
SO_2 produced (tpy) =	**0.0850**

assumptions:		
SO2 MW	64.06	lb/lb-mole
Ideal Gas Law	378.61	SCF/lb-mole

TARGA

Targa Midstream Services LLC - Roadrunner Gas Processing Plant

Fugitive Emissions

Emission unit number(s): FUG
Source description: Facility-wide Fugitive Emissions
Total Operating Hours: 8,760
Number of Treatment Trains: 3

Component		Emission factor[1] (lb/hr/source)	VOC Content[2] (wt%)	HAP Content[2] (wt%)	Hexane[2] (wt%)	H_2S Content[2] (wt%)	CO_2 Content[2] (wt%)	CH_4 Content[2] (wt%)	Subcomponent Count[3]	VOC Emissions[4,5] lb/hr	VOC Emissions[4,5] tpy	HAP Emissions[4,5] lb/hr	HAP Emissions[4,5] tpy	Hexane Emissions[4,5] lb/hr	Hexane Emissions[4,5] tpy	H_2S Emissions[4,5] lb/hr	H_2S Emissions[4,5] tpy	CO_2 Emissions[4,5] lb/hr	CO_2 Emissions[4,5] tpy	CH_4 Emissions[4,5] lb/hr	CH_4 Emissions[4,5] tpy
Valves	Inlet Gas	9.92E-03	22.12%	0.52%	0.42%	0.0008%	0.68%	58.06%	6714	14.73	64.53	0.35	1.52	0.28	1.23	5.58E-04	2.45E-03	0.45	1.99	38.67	169.39
	Residue Gas	9.92E-03	3.91%	1.2291%	0.0190%	0.0000%	0.14%	78.82%	2982	1.16	5.06	0.36	1.59	0.01	0.02	0.00E+00	0.00E+00	0.04	0.18	23.32	102.13
	Light Oil	5.51E-03	99.98%	14.99%	11.72%	0.0000%	0.00%	0.00%	819	4.51	19.77	0.68	2.96	0.53	2.32	0.00E+00	0.00E+00	0.00	0.00	0.00	0.00
Connectors	Inlet Gas	4.41E-04	22.12%	0.52%	0.42%	0.0008%	0.68%	58.06%	18342	1.79	7.84	0.04	0.18	0.03	0.15	6.78E-05	2.97E-04	0.06	0.24	4.70	20.57
	Residue Gas	4.41E-04	3.91%	1.2291%	0.0190%	0.0000%	0.14%	78.82%	0	0.00	0.00	0.00	0.00	0.00	0.00	0.00E+00	0.00E+00	0.00	0.00	0.00	0.00
	Light Oil	4.63E-04	99.98%	14.99%	11.72%	0.0000%	0.00%	0.00%	2000	0.93	4.05	0.14	0.61	0.11	0.47	0.00E+00	0.00E+00	0.00	0.00	0.00	0.00
Flanges	Inlet Gas	8.60E-04	22.12%	0.52%	0.42%	0.0008%	0.68%	58.06%	3156	0.60	2.63	0.01	0.06	0.01	0.05	2.27E-05	9.96E-05	0.02	0.08	1.58	6.90
	Residue Gas	8.60E-04	3.91%	1.2291%	0.0190%	0.0000%	0.14%	78.82%	5406	0.18	0.80	0.06	0.25	0.00	0.00	0.00E+00	0.00E+00	0.01	0.03	3.66	16.05
	Light Oil	2.43E-04	99.98%	14.99%	11.72%	0.0000%	0.00%	0.00%	255	0.06	0.27	0.01	0.04	0.01	0.03	0.00E+00	0.00E+00	0.00	0.00	0.00	0.00
Pump Seals	Inlet Gas	5.29E-03	22.12%	0.52%	0.42%	0.0008%	0.68%	58.06%	0	0.00	0.00	0.00	0.00	0.00	0.00	0.00E+00	0.00E+00	0.00	0.00	0.00	0.00
	Residue Gas	5.29E-03	3.91%	1.2291%	0.0190%	0.0000%	0.14%	78.82%	0	0.00	0.00	0.00	0.00	0.00	0.00	0.00E+00	0.00E+00	0.00	0.00	0.00	0.00
	Light Oil	2.87E-02	99.98%	14.99%	11.72%	0.0000%	0.00%	0.00%	29	0.82	3.58	0.12	0.54	0.10	0.42	0.00E+00	0.00E+00	0.00	0.00	0.00	0.00
Other	Inlet Gas	1.94E-02	22.12%	0.52%	0.42%	0.0008%	0.68%	58.06%	324	1.39	6.09	0.03	0.14	0.03	0.12	5.27E-05	2.31E-04	0.04	0.19	3.65	15.99
	Residue Gas	1.94E-02	3.91%	1.2291%	0.0190%	0.0000%	0.14%	78.82%	0	0.00	0.00	0.00	0.00	0.00	0.00	0.00E+00	0.00E+00	0.00	0.00	0.00	0.00
	Light Oil	1.65E-02	99.98%	14.99%	11.72%	0.0000%	0.00%	0.00%	12	0.20	0.87	0.03	0.13	0.02	0.10	0.00E+00	0.00E+00	0.00	0.00	0.00	0.00
									Total:	**26.37**	**115.48**	**1.83**	**8.03**	**1.12**	**4.92**	**7.01E-04**	**3.07E-03**	**0.62**	**2.71**	**75.57**	**331.02**

[1] Emission factors from Table 2-4 of EPA Protocol for Equipment Leak Emission Estimates, 1995.
[2] Weight percent of gas and liquid components from site specific liquids and gas analyses.
[3] Component counts are based on facility design.
[4] Hourly Emissions [lb/hr] = Emissions Factor [lb/hr/component] * Weight Content of Chemical Component [%] * Subcomponent Count.
[5] Annual Emissions [ton/yr] = Hourly Emissions [lb/hr] * Operating Hours [hr/yr] * 1/2000 [ton/lb].

Targa Midstream Services LLC - Roadrunner Gas Processing Plant

Glycol Dehydrator

Emission Unit: EP-7 and 3-EP-7
Source Description: TEG Dehydrator emissions
Thermal Oxidizer Control Efficiency: 99.9%
Operating Hours: 8760 hrs/yr

	VOC		H_2S		Total HAP		Benzene		Toluene		Ethylbenzene		Xylene		Methane	
	lb/hr	tpy	lb/hr	tpy	lb/hr	tpy	lb/hr	tpy	lb/hr	tpy	lb/hr	tpy	lb/hr	tpy	lb/hr	tpy
Uncontrolled Emissions from ProMax	102.15	447.40	2.15E-05	9.42E-05	33.28	145.74	14.19	62.16	6.56	28.73	1.47	6.46	1.03	4.51	4.59	20.09
TOTAL Controlled Emissions	0.10	0.45	2.15E-08	9.42E-08	0.0333	0.1457	0.0142	0.0622	0.0066	0.0287	0.0015	0.0065	0.0010	0.0045	2.29E-05	1.00E-04
Uncontrolled Emissions Per Unit	102.15	447.40	2.15E-05	9.42E-05	33.28	145.74	14.19	62.16	6.56	28.73	1.47	6.46	1.03	4.51	4.59	20.09
Controlled Emissions Per Unit	0.10	0.45	2.15E-08	9.42E-08	0.0333	0.1457	0.0142	0.0622	0.0066	0.0287	0.0015	0.0065	0.0010	0.0045	2.29E-05	1.00E-04

Note: Controlled methane based on 99.9995% destruction (based on 0.001 kg/MMBtu emission EF in 40 CFR Part 98).
Emissions estimated using BR&E ProMax.
TEG Dehydrator controlled by thermal oxidizer unit EP-9
TEG Dehydrator controlled emissions exit via stack EP-9 but are listed as EP-7 and 3-EP-7 emission unit emissions

Targa Midstream Services LLC - Roadrunner Gas Processing Plant

Glycol Dehydrator

Emission Unit: 2-EP-7
Source Description: TEG Dehydrator emissions
Thermal Oxidizer Control Efficiency: 99.9%
Operating Hours: 8760 hrs/yr

	VOC		H_2S		Total HAP		Benzene		Toluene		Ethylbenzene		Xylene		Methane	
	lb/hr	tpy	lb/hr	tpy	lb/hr	tpy	lb/hr	tpy	lb/hr	tpy	lb/hr	tpy	lb/hr	tpy	lb/hr	tpy
Uncontrolled Emissions from ProMax	102.15	447.40	2.24E-05	9.81E-05	33.28	145.75	14.19	62.15	6.56	28.73	1.47	6.46	1.03	4.51	4.59	20.12
TOTAL Controlled Emissions	0.10	0.45	2.24E-08	9.81E-08	0.033	0.15	0.014	0.062	0.0066	0.029	0.0015	0.0065	0.0010	0.0045	2.30E-05	1.01E-04
Uncontrolled Emissions Per Unit	102.15	447.40	2.24E-05	9.81E-05	33.28	145.75	14.19	62.15	6.56	28.7	1.47	6.46	1.03	4.51	4.59	20.12
Controlled Emissions Per Unit	0.10	0.45	2.24E-08	9.81E-08	0.033	0.15	0.014	0.062	0.0066	0.0287	0.0015	0.0065	0.0010	0.0045	2.30E-05	1.01E-04

Note: Controlled methane based on 99.9995% destruction (based on 0.001 kg/MMBtu emission EF in 40 CFR Part 98).
Emissions estimated using BR&E ProMax.
TEG Dehydrator controlled by thermal oxidizer unit EP-9
TEG Dehydrator controlled emissions exit via stack EP-9 but are listed as 2-EP-7 emisision unit emissions

Targa Midstream Services LLC - Roadrunner Gas Processing Plant

Amine Gas Treatment

Emission Unit: EP-8, 2-EP-8, 3-EP-8
Source Description: Amine vent controlled by thermal oxidizer unit EP-9
Thermal Oxidizer Control Efficiency: 99.9%
Operating Hours: 8760 hrs/yr

Components	Uncontrolled[1]		Thermal Oxidizer Control Efficiency	Controlled[4]	
	EP-8 Amine Vent (lb/hr)	EP-8 Amine Vent (ton/yr)		EP-8 Amine Vent (lb/hr)	EP-8 Amine Vent (ton/yr)
H2S[2]	14.17	62.05	99.9%	0.014	0.062
SO2[3]	-	-	-	28.331	124.09
CO2	85,277.07	373,513.58	-	85,277.074	373513.58
N2	0.13	0.57	-	0.131	0.57
Methane	78.29	342.89	99.9%	0.078	0.34
Ethane	57.56	252.11	99.9%	0.058	2.52E-01
Propane	24.52	107.41	99.9%	0.025	0.11
i-Butane	2.53	11.07	99.9%	0.003	0.011
n-Butane	11.35	49.70	99.9%	0.011	0.050
i-Pentane	0.71	3.12	99.9%	0.001	<0.01
n-Pentane	1.26	5.52	99.9%	0.001	<0.01
n-Hexane	0.72	3.15	99.9%	0.00072	<0.01
n-Heptane	0.11	0.47	99.9%	0.000	<0.01
n-Octane	0.02	0.11	99.9%	0.000	<0.01
n-Nonane	0.00E+00	0.00E+00	99.9%	-	0.00E+00
n-Decane	0.00E+00	0.00E+00	99.9%	-	0.00E+00
Undecane	0.00E+00	0.00E+00	99.9%	-	0.00E+00
Benzene	90.79	397.67	99.9%	0.091	0.40
Toluene	5.62E+01	2.46E+02	99.9%	0.056	0.25
Ethylbenzene	18.11	79.33	99.9%	0.018	0.08
m-Xylene	17.67	77.39	99.9%	0.018	0.08
Water	2,506.19	10,977.09	-	2,506.185	10.98
MDEA	8.27E-05	3.62E-04	-	0.000	<0.01
Piperazine	9.05E-05	3.97E-04	-	0.000	<0.01
TEG	0.00E+00	0.00E+00	-	-	0.00
TOTALS:	**88,157**	**386,129**	**-**	**87812.10**	**373650.86**
TOTAL VOCs:	**224.00**	**981.12**	**-**	**0.22**	**0.98**
TOTAL HAPs:	**183.50**	**803.71**	**-**	**0.18**	**0.80**

Notes:

[1] Emissions from the amine vent are calculated using BR&E ProMax. Hourly emissions are based on the maximum emissions determined from ProMax runs conducted at varying gas flowrates.

[2]Controlled H_2S emissions assume conversion to SO_2 based on control efficiency.

[3]Controlled SO_2 emissions assumed 100% conversion of H_2S to SO_2.

[4]Controlled emissions are represented at the exit via stack EP-9 but are listed as EP-8 emisision unit emissions except for SO_2 and H_2S.

Targa Midstream Services LLC - Roadrunner Gas Processing Plant

Condensate Storage Tanks

Emission unit number(s):
Source description: Condensate Tanks

Annual Operating Hours:	8,760	
Control Efficiency:	95%	
Number of Tanks:	5	
Capacity of Tanks:	1,000	bbl
Hourly Throughout:	333.33	bbl/hr
Daily Throughput:	8000.00	bbl/d
Annual Throughput:	2920000	bbl/yr
Hourly Throughout per Tank:	67	bbl/hr
Daily Throughput per Tank:	1600	bbl/d
Annual Throughput per Tank:	584000	bbl/yr

Condensate Tank Emissions[1,2]

Component	Uncontrolled Emissions (hourly basis)			Uncontrolled Emissions (annual basis)			Controlled Emissions	
	Total Flash (lb/hr)	Total Working and Breathing (lb/hr)	Total per Tank (lb/hr)	Total Flash (lb/hr)	Total Working and Breathing (lb/hr)	Total Emissions Per Tank (tpy)	Total Emissions per Tank (lb/hr)	Total Emissions Per Tank (tpy)
Carbon Dioxide	0.00E+00	0.00E+00	0.00E+00	0.00E+00	0.00E+00	0.00E+00	0.00E+00	0.00E+00
Hydrogen Sulfide	2.88E-04	1.86E-02	0.00	0.00E+00	2.68E-03	2.35E-03	1.88E-04	1.17E-04
Nitrogen	7.73E-01	2.29E+00	0.61	0.00E+00	6.18E-01	5.42E-01	6.13E-01	5.42E-01
Methane	3.78E-03	6.10E-02	0.01	0.00E+00	1.29E-02	1.13E-02	6.48E-04	5.67E-04
Ethane	1.85E-03	1.84E-01	0.04	0.00E+00	2.83E-02	2.48E-02	1.86E-03	1.24E-03
Propane	6.92E-03	5.67E-01	0.11	0.00E+00	8.03E-02	7.04E-02	5.74E-03	3.52E-03
i-Butane	1.34E-02	9.91E-01	0.20	0.00E+00	1.34E-01	1.17E-01	1.00E-02	5.85E-03
n-Butane	1.81E-01	1.37E+01	2.78	0.00E+00	1.82E+00	1.59E+00	1.39E-01	7.96E-02
i-Pentane	5.92E-01	4.15E+01	8.42	0.00E+00	5.21E+00	4.57E+00	4.21E-01	2.28E-01
n-Pentane	7.24E-01	5.07E+01	10.28	0.00E+00	6.23E+00	5.46E+00	5.14E-01	2.73E-01
i-Hexane	3.42E-01	2.37E+01	4.82	0.00E+00	2.78E+00	2.44E+00	2.41E-01	1.22E-01
Hexane	1.91E-01	1.31E+01	2.67	0.00E+00	1.51E+00	1.32E+00	1.33E-01	6.60E-02
Heptane	9.96E-02	6.81E+00	1.38	0.00E+00	7.25E-01	6.35E-01	6.91E-02	3.18E-02
Cyclopentane	0.00E+00	0.00E+00	0.00	0.00E+00	0.00E+00	0.00E+00	0.00E+00	0.00E+00
Benzene	1.58E-02	7.06E-01	0.14	0.00E+00	7.84E-02	6.87E-02	7.22E-03	3.44E-03
Cyclohexane	6.37E-02	3.96E+00	0.80	0.00E+00	4.45E-01	3.90E-01	4.02E-02	1.95E-02
Methylcyclohexane	0.00E+00	0.00E+00	0.00	0.00E+00	0.00E+00	0.00E+00	0.00E+00	0.00E+00
2,2,4-Trimethylpentane	0.00E+00	0.00E+00	0.00	0.00E+00	0.00E+00	0.00E+00	0.00E+00	0.00E+00
Toluene	6.58E-03	3.04E-01	0.06	0.00E+00	3.17E-02	2.78E-02	3.11E-03	1.39E-03
Ethylbenzene	2.84E-04	1.37E-02	0.00	0.00E+00	1.33E-03	1.17E-03	1.40E-04	5.85E-05
o-Xylene	9.52E-04	4.02E-02	0.01	0.00E+00	3.84E-03	3.36E-03	4.12E-04	1.68E-04
Octane	3.42E-02	2.13E+00	0.43	0.00E+00	2.08E-01	1.82E-01	2.16E-02	9.09E-03
VOC	**2.27**	**158.34**	**32.12**	**0.00**	**19.26**	**16.87**	**1.61**	**0.84**
Total HAPS	**0.21**	**14.21**	**2.89**	**0.00**	**1.62**	**1.42**	**0.14**	**0.07**
H_2S	**2.88E-04**	**1.86E-02**	**3.77E-03**	**0.00E+00**	**2.68E-03**	**2.35E-03**	**1.88E-04**	**1.17E-04**

[1] Emissions from the condensate tanks are controlled by the combustor (COMB-1) with an assumed 95% DRE.
[2] Emissions are calculated using BR&E ProMax. Hourly loading emissions are based on the maximum hourly throughput of the facility. Annual emissions are

Targa Midstream Services LLC - Roadrunner Gas Processing Plant

Produced Water Storage Tank

Emission unit number(s): T-6
Source description: Produced Water Storage Tank

Annual Operating Hours:	8,760	
Control Efficiency:	0%	
Number of Tanks:	1	
Capacity of Tanks:	400	bbl
Hourly Throughout:	12.64	bbl/hr
Daily Throughput:	303.32	bbl/d
Annual Throughput:	24526	bbl/yr

Produced Water Tank Emissions[1,2]

Component	Uncontrolled Emissions (hourly basis)			Uncontrolled Emissions (annual basis)			Controlled Emissions	
	Flash (lb/hr)	Working and Breathing (lb/hr)	Total per Tank (lb/hr)	Flash (lb/hr)	Working and Breathing (lb/hr)	Total Emissions Per Tank (tpy)	Total Emissions per Tank (lb/hr)	Total Emissions Per Tank (tpy)
Carbon Dioxide	2.29E-01	3.04E-01	5.32E-01	2.29E-01	1.31E-02	1.06E+00	5.32E-01	1.06E+00
Hydrogen Sulfide	2.08E-03	3.11E-03	0.01	2.08E-03	1.17E-04	9.62E-03	5.19E-03	9.62E-03
Nitrogen	1.38E-03	5.16E-06	0.00	1.38E-03	1.08E-06	6.05E-03	1.39E-03	6.05E-03
Methane	2.30E-01	3.23E-03	0.23	2.30E-01	5.00E-04	1.01E+00	2.33E-01	1.01E+00
Ethane	1.92E-01	4.10E-03	0.20	1.92E-01	4.84E-04	8.45E-01	1.97E-01	8.45E-01
Propane	9.70E-02	3.11E-04	0.10	9.70E-02	4.16E-05	4.25E-01	9.73E-02	4.25E-01
i-Butane	1.03E-02	6.10E-06	0.01	1.03E-02	1.08E-06	4.53E-02	1.03E-02	4.53E-02
n-Butane	2.40E-02	1.73E-05	0.02	2.40E-02	2.25E-06	1.05E-01	2.40E-02	1.05E-01
i-Pentane	3.72E-03	5.71E-07	0.00	3.72E-03	9.22E-08	1.63E-02	3.72E-03	1.63E-02
n-Pentane	1.23E-03	5.38E-08	0.00	1.23E-03	9.07E-09	5.40E-03	1.23E-03	5.40E-03
Hexane	3.06E-04	2.42E-09	0.00	3.06E-04	4.40E-10	1.34E-03	3.06E-04	1.34E-03
Heptane	6.65E-05	1.05E-10	0.00	6.65E-05	2.05E-11	2.91E-04	6.65E-05	2.91E-04
Cyclopentane	1.07E-03	9.22E-07	0.00	1.07E-03	6.87E-08	4.69E-03	1.07E-03	4.69E-03
Benzene	3.54E-03	7.15E-05	0.00	3.54E-03	2.81E-06	1.55E-02	3.61E-03	1.55E-02
Cyclohexane	9.89E-04	2.48E-07	0.00	9.89E-04	1.78E-08	4.33E-03	9.89E-04	4.33E-03
Methylcyclohexane	2.20E-04	7.47E-09	0.00	2.20E-04	7.79E-10	9.65E-04	2.20E-04	9.65E-04
2,2,4-Trimethylpentane	1.17E-05	2.31E-11	0.00	1.17E-05	6.23E-12	5.11E-05	1.17E-05	5.11E-05
Toluene	8.44E-04	3.94E-06	0.00	8.44E-04	1.45E-07	3.70E-03	8.48E-04	3.70E-03
Ethylbenzene	1.44E-04	1.90E-07	0.00	1.44E-04	7.39E-09	6.29E-04	1.44E-04	6.29E-04
o-Xylene	8.35E-05	1.20E-07	0.00	8.35E-05	4.46E-09	3.66E-04	8.36E-05	3.66E-04
Octane	1.60E-06	3.22E-13	0.00	1.60E-06	5.76E-14	7.03E-06	1.60E-06	7.03E-06
Water	1.26E-02	6.01E-01	0.61	1.26E-02	2.85E-02	1.80E-01	6.14E-01	1.80E-01
VOC	**0.14**	**4.12E-04**	**0.14**	**0.14**	**4.81E-05**	**0.63**	**0.14**	**0.63**
Total HAPS	**4.93E-03**	**7.57E-05**	**5.00E-03**	**4.93E-03**	**2.97E-06**	**2.16E-02**	**5.00E-03**	**2.16E-02**
H_2S	**2.08E-03**	**3.11E-03**	**5.19E-03**	**2.08E-03**	**1.17E-04**	**9.62E-03**	**5.19E-03**	**9.62E-03**

[1] Emissions from the produced water tank are uncontrolled.

[2] Emissions are calculated using BR&E ProMax. Hourly loading emissions are based on the maximum hourly throughput of the facility. Annual emissions are based on the average daily throughput of the facility.

General Information

Flare functions as emergency control device. When streams are fed to flare it will be treated as an emission event.

(1) Flare Name:	TO 1	
(2) Flare EPN:	EP-9	
(3) What kind of device is this? Pick from list.	Thermal Oxidizer	
	Emission Factors for Waste Gas Stream(s) (ppmv) NOx 50 CO 40	
(4) Is there one or more pilot streams fired with pipeline quality natural gas or propane? Pick Yes or No. Follow instructions below.	No	
	Please move on to next question below.	
	Emission Factors for Pilot Stream (lb/MMscf) NOx 0 CO 0	
(5) Is there one or more pilot streams fired with field gas? Pick Yes or No. Follow instructions below.	No	
	Please move on to next question below.	
	Emission Factors for Pilot Stream (ppmv) NOx 0 CO 0	
(6) Is there an added fuel stream made up of pipeline quality natural gas or propane? Pick Yes or No. Follow instructions below.	Yes	
	Enter added fuel stream information into the boxes in the column for Steam No. 2 below.	
	Emission Factors for Added Fuel Stream (ppmv) NOx CO	
(7) Is there an added fuel stream made up of field gas? Pick Yes or No. Follow instructions below.	No	
	Please move on to next question below.	
	Emission Factors for Added Fuel Stream (lb/MMBtu) NOx 0 CO 0	
(8) VOC percent destruction efficiency (%)	99.9	
(9) propane percent destruction efficiency (%) *OPTIONAL*		
(10) H_2S percent destruction efficiency (%)	99.9	
(11) Which is utilized for this device?	automatic ignition system	

Emission Factors

[2] Emission Factors from Zeeco Guarantee (lb/MMBtu)

PM (Total) 0.008 lb/MMBtu

[1] Manufacturers Guaranteed Outlet Concentration

Pollutant	(ppmv)	
NOx	50	
CO	40	
calculation factors:		
NO2 MW	46.006	lb/lb-mole
CO MW	28	lb/lb-mole
Ideal Gas Law	379.43	SCF/lb-mole

Exhaust Stream per Zeeco Guarantee

Component	lb/hr	lb/lbmol	lbmol/hr	L/hr	vol%
CO2	33421	44	759.57	32,349,756	32%
H2O	7086.1	18	393.67	16,766,369	17%
N2	31261.58	28	1110.93	47,314,154	47%
SO2	15.47	64	0.24	10,283	0.0102%
O2	3158.75	32	98.7109375	4,204,066	4.1771%
					100%

Supplemental Fuel Gas per Zeeco Guarantee **30 MMBtu/hr**
Maximum Heating Value per Zeeco Guarantee **75 MMBtu/hr**

PV=nRT

T=	1600	F	1,144	K
n=	2,363	lbmol/hr	1,071,889	gmol/hr
P=	1	atm	29.92	in Hg
R=	0.082057	atm-L/mol-K		
V	100,644,628	L/hr	3,554,212	ft3/hr
T (act)	1600	F	2059.67	R
T (std)			327.67	R
V (std)			759,040	dscfh
V (std)			12,651	dscfm
Safety Factor			**1.33**	
V (std) with safety factor			**1,009,523**	**dscfh**

Emission Factors from AP-42 Table 1.4-3 (lb/MMscf)

SO_2	0.6
VOC	5.5
benzene	2.10E-03
propane	1.60

Stream Sent to Flare/Vapor Combustor No.	1	2	3	4	5	6	7	8	9	10	11	12	Total
Stream Sent to Flare/Vapor Combustor Name (Enter Names of Each Stream Here)		Waste Gas from Dehy	Waste Gas from Amine	Supplemental Fuel									-
Maximum Expected Hourly Volumtric Flow Rate of Stream (scf/hr)		2577.989	790764	29,412									822753.6207
Amount of Time Stream Fired (hrs/yr)		8760	8760	8760									-
Maximum Expected Annual Volumtric Flow Rate of Stream (scf/yr)		22,583,187	6,927,091,472	257,647,059									7,207,321,718
Heat Value of Stream - from program results or gas analysis (Btu/scf)		2550	23.70	1,020									-
propane weight percent of total stream (%) *OPTIONAL*													-
VOC weight percent of total stream (%) *OPTIONAL*													-

Hourly (lb/hr)

Stream Sent to Flare/Vapor Combustor No.	1	2	3	4	5	6	7	8	9	10	11	12	Total
Stream Sent to Flare/Vapor Combustor Name		Waste Gas from Dehy	Waste Gas from Amine	Supplemental Fuel									-
H2S	-	6.45E-05	14.17										14.17
Crude or Condensate VOC	-												0.00
Natural Gas VOC	-	306.44	224.00										530.44
Total VOC	-	306.44	224.00										530.44
benzene	-	42.57	90.79										133.37
Annual (tpy)													
H2S	-	2.82E-04	62										62.05
Crude or Condensate VOC	-	0.00	0.00										0.00
Natural Gas VOC	-	1342.19	981.12										2323.31
Total VOC	-	1342.19	981.12										2323.31
benzene	-	186.47	397.67										584.14

Controlled Emissions

Hourly (lb/hr)

Stream Sent to Flare/Vapor Combustor No.	1	2	3	4	5	6	7	8	9	10	11	12	Total
Stream Sent to Flare/Vapor Combustor Name		Waste Gas from Dehy	Waste Gas from Amine	Supplemental Fuel									-
NOx	0.000	--[1]	--[1]	--[1]	0.000	0.000	0.000	0.000	0.000	0.000	0.000	0.000	**6.12**
CO	0.000	--[1]	--[1]	--[1]	0.000	0.000	0.000	0.000	0.000	0.000	0.000	0.000	**2.98**
PM2.5	0.000	--[2]	--[2]	--[2]	0.000	0.000	0.000	0.000	0.000	0.000	0.000	0.000	**0.60**
PM10	0.000	--[2]	--[2]	--[2]	0.000	0.000	0.000	0.000	0.000	0.000	0.000	0.000	**0.60**
H2S	0.000	0.000	0.014	0.000	0.000	0.000	0.000	0.000	0.000	0.000	0.000	0.000	**0.01**
SO2	0.000	0.000	26.665	0.000	0.000	0.000	0.000	0.000	0.000	0.000	0.000	0.000	**26.66**
Crude or Condensate VOC	-	-	0.000	0.000	0.000	0.000	0.000	0.000	0.000	0.000	0.000	0.000	**0.00**
Natural Gas VOC	0.00	0.31	0.224	0.000	0.000	0.000	0.000	0.000	0.000	0.000	0.000	0.000	**0.53**
Total VOC	0.00	0.31	0.224	0.000	0.000	0.000	0.000	0.000	0.000	0.000	0.000	0.000	**0.53**
benzene	0.000	0.04257	0.091	0.000	0.000	0.000	0.000	0.000	0.000	0.000	0.000	0.000	**0.13**

Annual (tpy)

Stream Sent to Flare/Vapor Combustor No.	1	2	3	4	5	6	7	8	9	10	11	12	Total
Stream Sent to Flare/Vapor Combustor Name		Waste Gas from Dehy	Waste Gas from Amine	Supplemental Fuel									-
NOx	0.000	--[1]	--[1]	--[1]	0.000	0.000	0.000	0.000	0.000	0.000	0.000	0.000	**26.81**
CO	0.000	--[1]	--[1]	--[1]	0.000	0.000	0.000	0.000	0.000	0.000	0.000	0.000	**13.05**
PM2.5	0.000	--[2]	--[2]	--[2]	0.000	0.000	0.000	0.000	0.000	0.000	0.000	0.000	**2.63**
PM10	0.000	--[2]	--[2]	--[2]	0.000	0.000	0.000	0.000	0.000	0.000	0.000	0.000	**2.63**
H2S	0.000	0.000	0.062	0.000	0.000	0.000	0.000	0.000	0.000	0.000	0.000	0.000	**0.06**
SO2	0.000	0.001	116.792	0.000	0.000	0.000	0.000	0.000	0.000	0.000	0.000	0.000	**116.79**
Crude or Condensate VOC	-	-	0.000	0.000	0.000	0.000	0.000	0.000	0.000	0.000	0.000	0.000	**0.00**
Natural Gas VOC	0.000	1.342	0.981	0.000	0.000	0.000	0.000	0.000	0.000	0.000	0.000	0.000	**2.32**
Total VOC	0.000	1.342	0.981	0.000	0.000	0.000	0.000	0.000	0.000	0.000	0.000	0.000	**2.32**
benzene	0.000	0.0000	0.398	0.000	0.000	0.000	0.000	0.000	0.000	0.000	0.000	0.000	**0.40**

[1] CO and NOx emissions calculated based on the emission gurantees from manufacturer and the exhaust flue from the TO.

[2] $PM_{10}/PM_{2.5}$ emissions based on the emission guarantee from the manufacturer and the maximum heating rate of the TO.

Flare/Vapor Combustor Total Emissions (Each TO)

	Hourly Emissions (lb/hr)	Annual Emissions (tpy)
Crude or Condensate VOC	0.00	0.00
Natural Gas VOC	0.53	2.32
Total VOC	0.53	2.32
NOx	6.12	26.81
CO	2.98	13.05
PM2.5	0.60	2.63
PM10	0.60	2.63
H2S	0.01	0.06
SO2	26.66	116.79
benzene	0.13	0.40

Targa Midstream Services LLC - Roadrunner Gas Processing Plant

Thermal Oxidizer Downtime

Emission Unit: SSM-TO

Source Description: Thermal Oxidizer downtime during scheduled maintenance events.

Annual Downtime: 20 hrs/yr

	Uncontrolled Emissions		Thermal Oxidizer Downtime	
	EP-8, 2-EP-8, 3-EP-8	EP-7, 2-EP-7, and 3-EP-7	Total	
Components	**lb/hr**	**lb/hr**	**lb/hr**	**ton/yr**
H2S[2]	14.17	0.000017	14.17	0.14
SO23	0.00	0.00014	1.42E-04	1.42E-06
CO2	85,277.07	0.000011	85277.07	852.77
N2	0.13	0.0063	0.14	0.001
Methane	78.29	4.20	82.48	0.82
Ethane	57.56	11.02	68.58	0.69
Propane	24.52	20.18	44.71	0.45
i-Butane	2.53	4.90	7.43	0.07
n-Butane	11.35	19.25	30.60	0.306
i-Pentane	0.71	7.44	8.15	0.082
n-Pentane	1.26	9.88	11.14	0.111
n-Hexane	0.72	10.35	11.07	0.111
n-Heptane	0.11	6.51	6.62	0.0662
n-Octane	0.02	0.70	7.24E-01	7.24E-03
n-Nonane	0.00	0.00E+00	0.00E+00	0.00E+00
n-Decane	0.00	0.00E+00	0.00E+00	0.00E+00
Undecane	0.00	0.00E+00	0.00	0.00
Benzene	90.79	14.02	104.82	1.05
Toluene	56.20	6.45	62.65	0.63
Ethylbenzene	18.11	1.46	19.57	0.196
m-Xylene	17.67	0.99	18.66	0.19
Water	2,506.19	4.87	2511.05	25.11
MDEA	8.27E-05	1.72E-04	2.55E-04	2.55E-06
Piperazine	9.05E-05	5.68E-06	9.62E-05	9.62E-07
TEG	0.00E+00	0.00E+00	0.00E+00	0.00E+00
Total VOC:	224.00	102.15	326.15	3.26
Total HAPs:	183.50	33.28	216.77	2.17
Total H2S:	14.17	0.00	14.17	0.14

Targa Midstream Services LLC - Roadrunner Gas Processing Plant
Flare- Inlet Gas Flare Stream Analysis

Emission Unit:	EP-1, 2-EP-1, and 3-EP-1
Source Description:	Process Flares
Destruction Efficiency:	98%

Annual Inlet Gas Flared Gas Volume:[1]

Estimated Total Annual Gas (MSCF/yr):	240,000.0	Requested Annual Volume per Train
Manuf. Daily Gas Volume (MSCF/day):	240,000.0	Hourly Treatment Train Gas Flowrate
Max Hourly Flared Gas (MSCF/hr):	10,000.0	

Component	Mol Wt (lb/lb-mol) [2]	Component Net Heating Value (BTU/scf) [2]	Inlet Gas Analysis Date: 11/20/2019 mol%
Nitrogen	28.013	0	1.39700%
Methane	16.043	909	76.98300%
Carbon Dioxide	44.010	0	0.33000%
Hydrogen Sulfide*	34.081	587	0.05000%
Ethane	30.069	1,619	12.23400%
Propane	44.096	2,315	5.66800%
Iso-Butane	58.122	3,000	0.71700%
n-Butane	58.122	3,011	1.59500%
Iso-Pentane	72.149	3,699	0.28700%
n-Pentane	72.149	3,707	0.28800%
i-Hexanes	86.175	4,404	0.17900%
n-Hexane	86.175	4,404	0.10500%
Benzene	78.112	3,591	0.01700%
Cyclohexane	84.160	4,180	0.04800%
i-Heptanes	100.202	5,100	0.09100%
n-Heptane	100.202	5,100	0.01700%
Toluene	92.138	4,273	0.00700%
i-Octanes	114.229	5,796	0.03400%
n-Octane	114.229	5,796	0.00200%
i-Nonanes	128.255	6,493	0.00100%
TOTAL =	**21.30**	**1143.57**	**100.05%**

*Hydrogen Sulfide conservatively assumed to be 5 ppm.

Stream Emission Calculation:

Components	Hourly Emissions (pph)[3]	Annual Emissions (tpy)[3]	Hourly MMBTU Rate [4] MMBTU/hr	Total Net MMBTU [4] MMBTU/yr
Nitrogen	10314.75	123.78	0.00	0.00
Methane	325524.06	3906.29	7000.83	168020.02
Hydrogen Sulfide*	449.14	5.39	2.93	70.41
Carbon Dioxide	3827.97	45.94	0.00	0.00
Ethane	96959.45	1163.51	1980.68	47536.43
Propane	65876.68	790.52	1312.14	31491.41
Iso-Butane	10984.05	131.81	215.10	5162.40
n-Butane	24434.53	293.21	480.25	11526.11
Iso-Pentane	5457.77	65.49	106.16	2547.87
n-Pentane	5476.78	65.72	106.76	2562.28
i-Hexanes	4065.72	48.79	78.83	1891.96
n-Hexane	2384.92	28.62	46.24	1109.81
Benzene	350.00	4.20	6.10	146.51
Cyclohexane	1064.75	12.78	20.06	481.54
i-Heptanes	2403.37	28.84	46.41	1113.84
n-Heptane	448.98	5.39	8.67	208.08
Toluene	170.00	2.04	2.99	71.79
i-Octanes	1023.67	12.28	19.71	472.95
n-Octane	60.22	0.72	1.16	27.82
i-Nonanes	33.80	0.41	0.65	15.58
	Total BTU Values =		**11,435.70**	**274,456.81**

*Hydrogen Sulfide conservatively assumed to be 10 ppm.

Gas Flaring Summary	pph	tpy
Total =	561,310.58	6,735.73
Total VOC =	124,235.22	1,490.82
Total HAP =	2,904.91	34.859
Total Hexane =	2,384.92	28.619
Total H_2S =	449.14	5.39

Controlled Flaring Stream[5]	pph	tpy
Total VOC =	2,484.70	29.82
Total HAP =	58.10	0.70
Total Hexane =	47.70	0.57
Total H_2S =	8.98	0.11

Notes:
(1) Conservatively estimated annual gas volume. Max anticipated hourly volume based on manufacturer rated capacity.
(2) Component Molecular Weights from the following source: BR&E Promax
Component Net Heating Values from the following source: BR&E Promax
(3) Hourly and Annual Event gas emissions calculated as follows:
Hourly Emissions (lb/hr) = Hourly Gas Volume (scf/hr) * Component Mol Wt (lb/lb-mol) * Component Mole% / 379.4 ft^3/lb mol
Annual Emissions (tpy) = Annual Gas Volume (scf/yr) * Component Mol Wt (lb/lb-mol) * Component Mole% / 379.4 ft^3/lb mol / 2000 lb/ton
(4) Component MMBTU/hr = [Component Hourly Emissions (pph) * Component Net Heating Value (BTU/scf) * 379.4 ft^3/lb-mol] / Component Mol Wt (lb/lb-mol)
Component MMBTU/yr = [Component Annual Emissions (tpy) * 2000 lb/ton * Component Net Heating Value (BTU/scf) * 379.4 ft^3/lb-mol] / Component Mol Wt (lb/lb-mol)
Total Net MMBTU/event = Sum of all Individual Component MMBTU/event
(5) VOC, HAP and H2S emissions estimated based on event stream routed to flare and 98% efficiency.

Targa Midstream Services LLC - Roadrunner Gas Processing Plant
Flare- Residue Gas Flare Stream Analysis

Emission Unit:	EP-1, 2-EP-1, and 3-EP-1
Source Description:	Process Flares
Destruction Efficiency:	98%

Annual Residue Gas Flared Gas Volume:[1]

Estimated Total Annual Gas (MSCF/yr):	25.0	Requested Annual Volume per Train
Manuf. Daily Gas Volume (MSCF/day):	600.0	Hourly Treatment Train Gas Flowrate
Max Hourly Flared Gas (MSCF/hr):	25.0	

Component	Mol Wt (lb/lb-mol) [2]	Component Net Heating Value (BTU/scf) [2]	Residue Gas Analysis Date: 9/21/2021 mol%
Helium	4.003	0	0.0071%
Nitrogen	28.013	0	1.2421%
Carbon Dioxide	44.010	0	0.0560%
Oxygen	31.999	0	0.0047%
Hydrogen Sulfide	34.081	587	0.0000%
Methane	16.043	909	88.3783%
Ethane	30.069	1,619	9.0801%
Propane	44.096	2,315	0.6880%
i-Butane	58.122	3,000	0.0644%
n-Butane	58.122	3,011	0.1371%
i-Pentane	72.149	3,699	0.0350%
n-Pentane	72.149	3,707	0.0481%
Neopentane	72.149	3,707	0.0013%
Hexanes+	87.090	4,475	0.1144%
n-Hexane	86.175	4,404	0.0190%
Benzene	78.112	3,591	0.0918%
Toluene	92.138	4,273	0.0272%
2,2,4-Trimethylpentane	114.229	5,796	0.0045%
Ethylbenzene	106.165	4,971	0.0004%
O-Xylene	106.165	4,905	0.0004%
TOTAL =	**17.98**	**986.55**	**100.00%**

Stream Emission Calculation:

Components	Hourly Emissions (pph)[3]	Annual Emissions (tpy)[3]	Hourly MMBTU Rate [4] MMBTU/hr	Total Net MMBTU [4] MMBTU/yr
Helium	0.02	9.36E-06	0.00E+00	0.00E+00
Nitrogen	22.93	1.15E-02	0.00E+00	0.00E+00
Oxygen	1.62	8.12E-04	0.00E+00	0.00E+00
Carbon Dioxide	0.10	4.96E-05	0.00E+00	0.00E+00
Hydrogen Sulfide	0.00	0.00E+00	0.00E+00	0.00E+00
Methane	934.27	4.67E-01	2.01E+01	2.01E+01
Ethane	179.91	9.00E-02	3.68E+00	3.68E+00
Propane	19.99	1.00E-02	3.98E-01	3.98E-01
i-Butane	2.47	1.23E-03	4.83E-02	4.83E-02
n-Butane	5.25	2.63E-03	1.03E-01	1.03E-01
i-Pentane	1.66	8.32E-04	3.24E-02	3.24E-02
n-Pentane	2.29	1.14E-03	4.46E-02	4.46E-02
Neopentane	0.06	3.09E-05	1.20E-03	1.20E-03
Hexanes+	6.56	3.28E-03	1.28E-01	1.28E-01
n-Hexane	1.08	5.40E-04	2.09E-02	2.09E-02
Benzene	4.73	2.36E-03	8.25E-02	8.25E-02
Toluene	1.65	8.24E-04	2.90E-02	2.90E-02
2,2,4-Trimethylpentane	0.34	1.71E-04	6.58E-03	6.58E-03
Ethylbenzene	0.03	1.48E-05	5.27E-04	5.27E-04
O-Xylene	0.03	1.55E-05	5.44E-04	5.44E-04
		Total BTU Values =	**24.66**	**24.66**

Gas Flaring Summary	pph	tpy
Total =	1,184.99	0.59
Total VOC =	46.14	0.023
Total HAP =	7.86	0.0039
Total Hexane =	1.08	0.001
Total H_2S =	0.00E+00	0.00E+00

Controlled Flaring Stream[5]	pph	tpy
Total VOC =	0.92	4.61E-04
Total HAP =	0.16	7.86E-05
Total Hexane =	0.022	1.08E-05
Total H_2S =	0.00E+00	0.00E+00

Notes:
(1) Conservatively estimated annual gas volume. Max anticipated hourly volume based on manufacturer rated capacity.
(2) Component Molecular Weights from the following source: BR&E Promax
Component Net Heating Values from the following source: BR&E Promax
(3) Hourly and Annual Event gas emissions calculated as follows:
Hourly Emissions (lb/hr) = Hourly Gas Volume (scf/hr) * Component Mol Wt (lb/lb-mol) * Component Mole% / 379.4 ft^3/lb mol
Annual Emissions (tpy) = Annual Gas Volume (scf/yr) * Component Mol Wt (lb/lb-mol) * Component Mole% / 379.4 ft^3/lb mol / 2000 lb/ton
(4) Component MMBTU/hr = [Component Hourly Emissions (pph) * Component Net Heating Value (BTU/scf) * 379.4 ft^3/lb-mol] / Component Mol Wt (lb/lb-mol)
Component MMBTU/yr = [Component Annual Emissions (tpy) * 2000 lb/ton * Component Net Heating Value (BTU/scf) * 379.4 ft^3/lb-mol] / Component Mol Wt (lb/lb-mol)
Total Net MMBTU/event = Sum of all Individual Component MMBTU/event
(5) VOC, HAP and H2S emissions estimated based on event stream routed to flare and 98% efficiency.

Targa Midstream Services LLC - Roadrunner Gas Processing Plant

Process Flares

Emission Units: EP-1, 2-EP-1, and 3-EP-1
Source Description: Process Flares
Destruction Efficiencv: 98%

Flare Information	
Unit(s):	EP-1, 2-EP-1, and 3-EP-1
Unit Count:	3
Annual Operating Hours:	8,760
Combustion Efficiency (%):	98%

Pilot Input Information [1]

Activity	Parameters	Value	Unit	Notes:
EP-1 Pilot	Hourly Volume Flow Rate	500.0	scf/hr	Design Specification
	Natural Gas Heat Value	1071.8	BTU/scf	Fuel Gas Heat Value
	Annual Volume Flow Rate	4.38	MMscf/yr	
	Hourly Heat Rate	0.536	MMBtu/hr	
	Annual Heat Rate	4694.48	MMBtu/yr	
EP-1 Purge Gas	Hourly Volume Flow Rate	980.0	scf/hr	Design Specification
	Natural Gas Heat Value	1071.8	BTU/scf	Fuel Gas Heat Value
	Annual Volume Flow Rate	8.58	MMscf/yr	
	Hourly Heat Rate	1.050	MMBtu/hr	
	Annual Heat Rate	9201.19	MMBtu/yr	
2-EP-1 Pilot	Hourly Volume Flow Rate	78.0	scf/hr	Design Specification
	Natural Gas Heat Value	1071.8	BTU/scf	Fuel Gas Heat Value
	Annual Volume Flow Rate	0.68	MMscf/yr	
	Hourly Heat Rate	0.084	MMBtu/hr	
	Annual Heat Rate	732.34	MMBtu/yr	
2-EP-1 Purge Gas	Hourly Volume Flow Rate	1040.0	scf/hr	Design Specification
	Natural Gas Heat Value	1071.8	BTU/scf	Fuel Gas Heat Value
	Annual Volume Flow Rate	9.11	MMscf/yr	
	Hourly Heat Rate	1.115	MMBtu/hr	
	Annual Heat Rate	9764.53	MMBtu/yr	
3-EP-1 Pilot	Hourly Volume Flow Rate	219.0	scf/hr	Design Specification
	Natural Gas Heat Value	1071.8	BTU/scf	Fuel Gas Heat Value
	Annual Volume Flow Rate	1.92	MMscf/yr	
	Hourly Heat Rate	0.235	MMBtu/hr	
	Annual Heat Rate	2056.18	MMBtu/yr	

[1] Pilot and Purge rates for EP-1. 2-EP-2. and 3-EP-3 based on manufacturer specification sheet for each flare.

Pilot Emission Calculation

Description	NO_x[1]	CO[1]	VOC	SO_2[1]	H_2S[1]	HAPs	Units	Notes
Emission Factors	0.138	0.2755					lb/MMBTU	TNRCC RG-109 (high Btu; other)
Fuel Sulfur and H_2S Content				2.0			gr S/100scf	Conservative assumption for fuel sulfur content (gr/100scf)
				0.0029			lb S/ Mscf	Gr S/100 scf * (1 lb/7000 gr) * (1000scf/Mscf)
					1.00E+01		ppm	Pipeline Specification
					0.6		gr H_2S /100scf	Pilot gas H_2S content
					0.001		lb H_2S/Mscf	
EP-1 Pilot Emissions	0.074	0.15	-	0.0037	8.95E-06	-	lb/hr	
	0.32	0.65	-	0.016	3.92E-05	-	tpy	
2-EP-1 Pilot Emissions	0.012	0.023	-	0.00057	1.40E-06	-	lb/hr	
	0.05	0.10	-	0.0025	6.11E-06	-	tpy	
3-EP-1 Pilot Emissions	0.032	0.065	-	0.0016	1.40E-06	-	lb/hr	
	0.14	0.28	-	0.0071	6.11E-06	-	tpy	
EP-1 Purge Emissions	0.14	0.29	-	0.0056	1.75E-05	-	lb/hr	
	0.63	1.27	-	0.025	7.68E-05	-	tpy	
2-EP-1 Purge Emissions	0.15	0.31	-	0.0077	1.86E-05	-	lb/hr	
	0.67	1.35	-	0.034	8.15E-05	-	tpy	
Process Emissions per Flare	1578.13	3150.54	2484.70	828.54	8.98	58.10	lb/hr	Process emissions represent inlet and residue gas flaring when gas can not be sent to sales.
	18.94	37.81	29.82	9.94	0.108	0.70	tpy	
Total EP-1 Flare Emissions	1578.35	3150.97	2484.70	828.55	8.98	58.10	lb/hr	
	19.90	39.72	29.82	9.98	0.108	0.70	tpy	
Total 2-EP-1 Flare Emissions	1578.29	3150.87	2484.70	828.55	8.98	58.10	lb/hr	
	19.66	39.26	29.82	9.98	0.108	0.70	tpy	
Total 3-EP-1 Flare Emissions	1578.16	3150.60	2484.70	828.54	8.98	58.10	lb/hr	
	19.08	38.09	29.82	9.95	0.108	0.70	tpy	

Inlet Gas Flaring Emissions Calculations per Flare

Unit ID	Pollutant	Emission Factors (lb/MMBTU)[1]	Emissions lb/hr	Emissions tons/yr
EP-1, 2-EP-1, 3-EP-1	NO_x	0.138	1578.13	18.938
	CO	0.2755	3150.54	37.806
	VOC	Mass Balance [2]	2484.70	29.82
	HAP	Mass Balance [2]	58.10	0.697
	H_2S	Mass Balance [2]	8.98	0.108
	SO_2	Stoichiometric[1]	828.54	9.94

Flare Stream [3]: 11,435.70 Max Net Hourly MMBTU Value (MMBTU/hr)
274,456.81 Net Annual MMBTU Value (MMBTU/yr)

Residue Gas Flaring Emissions Calculations per Flare

Unit ID	Pollutant	Emission Factors (lb/MMBTU)[1]	Emissions lb/hr	Emissions tons/yr
EP-1, 2-EP-1, 3-EP-1	NO_x	0.138	3.40	1.70E-03
	CO	0.2755	6.79	3.40E-03
	VOC	Mass Balance [2]	0.92	4.61E-04
	HAP	Mass Balance [2]	0.16	7.86E-05
	H_2S	Mass Balance [2]	0.00	0.00E+00
	SO_2	Stoichiometric[1]	0.00	0.00E+00

Flare Stream [3]: 24.66 Max Net Hourly MMBTU Value (MMBTU/hr)
24.66 Net Annual MMBTU Value (MMBTU/yr)

Notes:

(1) Flare NO_x and CO emission factors: TNRCC RG-109 (high Btu; other). SO_2: Mass balance assuming 98% combustion of H_2S and 100% conversion of combusted H_2S to SO_2:
Pilot Gas SO_2 Emissions (lb/hr) = [(Pilot Gas Flow (Mscf/hr) * Fuel Gas Sulfur Content (lb S/Mscf)*(64 lb/lbmol SO_2 / 32 lb/lbmol S)) + (Pilot Gas Flow (Mscf/hr) * Fuel Gas H_2S Content (lb H_2S/Mscf)*(64 lb/lbmol SO_2 /34 lb/lbmol H_2S)*(DRE))]
Pilot Gas H_2S Emissions (lb/hr) = [Pilot Gas Flow Rate (Mscf/hr) * Fuel Gas H_2S Content (lb H_2S/Mscf) * (1 - DRE)]
Process SO_2 Emissions (lb/hr) = [H_2S Mass Flow Rate (lb/hr) * DRE * (64 lb/lbmol SO_2 / 34 lb/lbmol H_2S)]
Process SO_2 Emissions (tpy) = [H_2S Mass Flow Rate (tpy) * DRE * (64 lb/lbmol SO_2 / 34 lb/lbmol H_2S)]

(2) VOC, HAP and H_2S emissions estimated based on event stream routed to flare and 98% efficiency.

(3) Flare stream includes inlet and residue gas.

Emission Unit	MSST
Name	Condensate Tanks
Tank No.:	5
Product stored:	Condensate
Type of tank roof	Fixed Roof
Tank Capacity (bbl)	1,000
Tank Diameter (ft) (D)	21.50
Vapor Molecular Wt. (lb/lb mol) (M_v)	72.77
Number of events/yr	5
Height of the roof (ft)	16.00
Saturation factor (S)	1.0

Vapor Space Volume (ft^3) (V_v)	5808.80
Height of Vapor Space under roof (ft)* (h_v)	16.00

	Max. hourly emissions lb/hr	Avg.Annual emissions tpy	
Duration of activity (hrs/event)	1	1	
True Vapor Pressure (psia) (P)	11.23	6.79	Max > Avg
Day time temperature (°F)	95.00	63.20	Max > Avg
Night time temperature (°F)	68.00	49.10	
Temperature Expansion %	4.86	2.69	
Emissions (lb/event)	797.06	511.07	
Max. Hourly Emissions (lb/hr)	38.78		
Avg. Hourly Emissions (lb/hr)		13.77	
Avg. Annual emissions (tpy)		0.03	

VOC Wt%	98.41
H_2S Wt%	-
Benzene Wt%	0.4391

Type of Control Device	
Are tank vapors (A) uncontrolled; (B) controlled by a flare, vapor combustor, thermal oxidizer, or vapor recovery unit (VRU); or (C) controlled by another type of control device?	(A) uncontrolled
VOC Control Efficiency	
H_2S Control Efficiency	

VOC Type: (pick from list)
Natural Gas VOC

Emission Type: (pick from list)
Low Pressure Periodic

Emissions before control and before wt% reduction		
Type of Losses	Max. hourly mass lb/hr	Avg. Annual mass tpy
Thermal / Passive Expansion	38.78	0.034
Planned MSS Emissions		
Air Contaminant	**Max. hourly emissions lb/hr**	**Avg.Annual emissions tpy**
Total VOC	**38.16**	**0.034**
Benzene	**16.75**	**1.38E-04**
Toluene	**7.38E-02**	**5.58E-05**
Ethylbenzene	**0.0033**	**2.35E-06**
Xylene	**0.0098**	**6.75E-06**
Hexane	**3.17**	**0.0027**
2,2,4-Trimethylpentane	**0.00E+00**	**0.00E+00**
Total H_2S	**0.00E+00**	**0.00E+00**

TARGA

Targa Midstream Services LLC - Roadrunner Gas Processing Plant

Condensate Truck Loading

Equation[1]:

$$L_L = \frac{12.46 * SPM}{T}$$

Variables[1]:

L_L - Loading Loss (lbs/1000 gal loaded)
S - Saturation Factor (From Table 5.2-1 of AP-42, Section 5.2)
P - True Vapor Pressure of Loaded Liquid (psia)
M - Molecular Weight of Vapor (lb/lb mol)
T- Temperature of Bulk Liquid (°R = [°F + 460])

															LOAD-1			
Unit	**Material Loaded [2]**	**Loading Method**	**S**	**P_{max} [3] (psia)**	**M [3] (lb/lbmol)**	**T_{max} [4] (°R)**	**L_L (lbs/1000 gal)**	**Hourly Throughput [5] (gal/hr)**	**Capture Efficiency (%)**	**VOC Wt %**	**HAP Wt %**	**H_2S Wt %**	**VOC Vapor Loading Losses (lb/hr)**	**HAP Vapor Loading Losses (lb/hr)**	**H_2S Vapor Loading Losses (lb/hr)**	**Uncaptured Hourly VOC Emissions [7] (lb/hr)**	**Uncaptured Hourly HAP Emissions [3,7] (lb/hr)**	**Uncaptured Hourly H_2S Emissions [3,7] (lb/hr)**	**DRE (%)**
LOAD	Condensate	Submerged	1.0	14.70	52.44	555	17.31	15,120	95.0%	98.41%	8.83%	0.01%	257.50	23.12	0.030	12.88	1.16	1.509E-03	95%
										TOTAL			**257.50**	**23.12**	**0.030**	**12.88**	**1.16**	**1.509E-03**	

																LOAD-1			
Unit	**Material Loaded [2]**	**Loading Method**	**S**	**P_{avg} [3] (psia)**	**M [3] (lb/lbmol)**	**T_{avg} [4] (°R)**	**L_L (lbs/1000 gal)**	**Annual Throughput (gal/yr) [6]**	**Capture Efficiency (%)**	**VOC Wt %**	**HAP Wt %**	**H_2S Wt %**	**VOC Vapor Loading Losses (tpy)**	**HAP Vapor Loading Losses (tpy)**	**H_2S Vapor Loading Losses (tpy)**	**Uncaptured Annual VOC Emissions [7] (tpy)**	**Uncaptured Annual HAP Emissions [3,7] (tpy)**	**Uncaptured Annual H_2S Emissions [3,7] (tpy)**	**DRE (%)**
LOAD	Condensate	Submerged	1.0	14.70	52.44	523	18.36	122,640,000	95.0%	96.68%	8.14%	0.01%	1,088.27	91.63	0.151	54.41	4.581	7.57E-05	95%
										TOTAL			**1,088.27**	**91.63**	**0.151**	**54.41**	**4.581**	**7.57E-05**	

[1] Loading loss equation and variables are from AP-42, Section 5.2, Transportation and Marketing of Petroleum Liquids.
[2] Material loaded is 100% condensate.
[3] Vapor pressure, molecular weight, HAP content, and H_2S content is obtained from ProMax run.
[4] Maximum temperature is 95° F and the average temperature is 63.5° F.
[5] The maximum hourly throughput is based on the capability of the tank truck to load liquids in one hour.
[6] Annual throughput for each loading spot represents site-wide throughput; therefore, total annual emissions is the maximum emissions of each loading spot.
[7] Controlled loading emissions are based on normal operations which account for a capture efficiency of 95% for vapor balanced loading , and a DRE of 95% at the flare. Captured vapors are balanced to the tanks which are controlled by the flare and are thus included in the flare emission totals.

Emission Unit: COMB-1

Emission Factors

Emission Factors from AP-42 Table 1.4-1 and 1.4-2 (lb/MMscf) and TNRCC RG-109

NOx	100	0.138	lb/MMBtu
CO	84	0.276	lb/MMBtu
PM (Total)	7.6	0.0075	lb/MMBtu

Emission Factors from AP-42 Table 1.4-2 (lb/MMscf)

SO_2	0.6		
VOC	5.5	0.0054	lb/MMBtu

Stream Sent to Flare/Vapor Combustor Name (Enter Names of Each Stream Here)	BD MSS	Tank Working/Breathing	Loading Vapor Balance to Tanks	-
Maximum Expected Hourly Volumtric Flow Rate of Stream (scf/hr)	50000	838.99	418.45	**51257.43951**
Amount of Time Stream Fired (hrs/yr)	40	8760	8111.11	-
Maximum Expected Annual Volumtric Flow Rate of Stream (scf/yr)	2,000,000.00	7,349,572.28	3,394,072.08	**12743644.36**
Heat Value of Stream - from program results or gas analysis (Btu/scf)	1,020.00	3,970.23	3,970.23	-
propane weight percent of total stream (%) *OPTIONAL*				-
VOC weight percent of total stream (%) *OPTIONAL*				-

Hourly (lb/hr)				
Stream Sent to Flare/Vapor Combustor Name	**BD MSS**	**Tank Working/Breathing**	**Loading Vapor Balance to Tanks**	**-**
VOC	590.9874909	160.61	244.63	**996.22**
HAPS	32.16	14.43	21.96	**68.54**
H_2S	0.023	0.02	0.03	**0.07**
Annual (tpy)				
VOC	11.81974982	84.35	1033.86	**1130.02**
HAPS	0.643127351	7.10	87.05	**94.79**
H_2S	0.00046	0.01	0.00	**0.01**

Controlled Emissions

Hourly (lb/hr)

Stream Sent to Flare/Vapor Combustor Name	BD MSS	Tank Working/Breathing	Loading Vapor Balance to Tanks	-
NOx	7.038	0.460	0.229	**7.73**
CO	14.051	0.918	0.458	**15.43**
PM2.5	0.380	0.025	0.012	**0.42**
PM10	0.380	0.025	0.012	**0.42**
H2S	1.16E-03	9.42E-04	1.43E-03	**3.53E-03**
SO2	0.071	3.42E-02	5.15E-02	**0.16**
Natural Gas VOC	29.549	8.030	0.009	**37.59**
Total VOC	29.549	8.030	0.009	**37.59**
Total HAPs	1.608	0.721	1.098	**3.43**

Annual (tpy)

Stream Sent to Flare/Vapor Combustor Name	BD MSS	Tank Working/Breathing	Loading Vapor Balance to Tanks	-
NOx	0.141	2.013	0.930	**3.08**
CO	0.281	4.019	1.856	**6.16**
PM2.5	0.008	0.109	0.050	**0.17**
PM10	0.008	0.109	0.050	**0.17**
H2S	2.31E-05	5.87E-04	1.02E-06	**6.11E-04**
SO2	6.00E-04	2.22E-03	1.02E-03	**3.83E-03**
Natural Gas VOC	0.006	4.217	0.036	**4.26**
Total VOC	0.006	4.217	0.036	**4.26**
Total HAPs	0.032	0.355	4.352	**4.74**

Flare/Vapor Combustor Total Emissions		
	Hourly Emissions (lb/hr)	Annual Emissions (tpy)
Natural Gas VOC	37.59	4.26
Total HAPs	3.43	4.74
NOx	7.73	3.08
CO	15.43	6.16
PM2.5	0.42	0.17
PM10	0.42	0.17

Haul Road Inputs

Site-Wide

Description	Value	Unit
Annual Operating Hours:	8,760	hr
Daily Operating Hours:	24	hr

Unpaved Haul Road

Parameter	Value	Unit
Empty Vehicle Weight[1]	16	ton
Load Size [2]	21.2	ton
Loaded Vehicle Weight[3]	37.2	ton
Mean Vehicle Weight[4]	26.6	ton
Vehicles Per Day [5]	12	VPD
Vehicles Per Year	4380	VPY
Segment Length	0.06	mile
Trips per Segment	2	-
Effective Segment Length[6]	0.12	mile
Trips per Hour[7]	1.00	-
Wet Days[8]	70	day
Surface Silt Content[9]	4.8	%
Control Efficiency	0	%

[1] Empty vehicle weight includes driver and occupants and full fuel load.

[2] Include cargo, transported materials, etc. (5.6 lb/gal RVP10 *7560 gal truck/ 2000lb/ton)

[3] Loaded vehicle weight = Empty + Load Size

[4] Mean Vehicle weight = (Loaded Weight + Empty Weight) / 2

[5] Vehicles per day = (Turnovers/year) / (365 days/year)

[6] Effective segment length = trips per segment * segment length

[7] Trips per hour = Vehicles per day * Segments per trip ÷ Hours of Operation per Day

[8] Wet days is the NM default allowed by NMED without additional justification

[9] Surface silt content based on AP-42 Section 13.2.2.2, Table 13.2.2-1

Unpaved Road Emission Factors

Route	Calculation Parameters [1]												Hourly Emission Factors			Annual Emission Factors		
	s	W	P	k			a			b			E [2]			E_{ext} [5]		
	Silt Content [1]	Mean Vehicle Weight	Wet Days	PM_{30}	PM_{10}	$PM_{2.5}$	PM_{30}	PM_{10}	$PM_{2.5}$	PM_{30}	PM_{10}	$PM_{2.5}$	PM_{30} [3]	PM_{10}	$PM_{2.5}$	PM_{30}	PM_{10}	$PM_{2.5}$
	%	tons	day	lb/VMT	lb/VMT	lb/VMT							lb/VMT	lb/VMT	lb/VMT	lb/VMT	lb/VMT	lb/VMT
Condensate Trucks	4.8	26.6	70	4.9	1.5	0.15	0.70	0.90	0.90	0.45	0.45	0.45	6.9	1.8	0.18	5.6	1.4	0.14

[1] Constants are from AP-42 Table 13.2.2-2 in Section 13.2.2.2, and emission factors are calculated using equation 1a.

Unpaved Road Emissions

Route	Calculation Inputs						Uncontrolled Emissions						Controlled Emissions [6]					
	Annual Operation	Segment Length	Trips per Segment	Number of Trucks per Year	Effective Segment Length	Average VMT/yr [4]	PM_{30}		PM_{10}		$PM_{2.5}$		PM_{30}		PM_{10}		$PM_{2.5}$	
	hr	mi		trucks/yr	mi	mi/yr	lb/hr	tpy	lb/hr	tpy	lb/hr	tpy	lb/hr	tpy	lb/hr	tpy	lb/hr	tpy
Condensate Trucks	8,760	0.06	2	4380	0.12	526	0.41	1.5	0.11	0.37	0.011	0.037	0.41	1.5	0.11	0.37	0.011	0.037
						Totals	***0.41***	***1.5***	***0.11***	***0.37***	***0.011***	***0.037***	***0.41***	***1.5***	***0.11***	***0.37***	***0.011***	***0.037***

[1] Surface silt = % of 75 micron diameter and smaller particles

[2] E = k x (s/12)^a x (W/3)^b (AP-42 page 13.2.2-4 Equation 1a, November 2006)

E= Size Specific Emission Factor (lb/VMT)

s = surface material silt content (%)

k, a, b = constants from AP-42 Table 13.2.2-2

W = Weighted Mean Vehicle Weight from Haul Road Inputs (tons)

[3] PM_{30} emission factor in equation is assumed as a surrogate for TSP emissions

[4] VMT/yr = Vehicle Miles Travelled per year= Trips per year * Segment Length

[5] Wet Day Emission Factor = E * (365 - Wet Days)/365. Wet days value is the NM default allowed by NMED without additional justification.

[6] Controlled Emissions = Uncontrolled Emissions * (1 - Control Factor/100%)

Control Efficiency = 0%

Emission Unit	MSSM
Identifier	MSS Pigging

Describe this MSS event in detail, include specifically what is being done and how it is being done.	Emissions from routine pigging activities.

Actual Volume of the Vented Unit (scf - standard cubic feet)	3,850.00
Actual Volume of the Vented Unit (acf - actual cubic feet)	62.43
Pressure of Gas Inside the Unit Before Venting (psig)	900
Atmospheric Pressure (psia)	14.7
Pressure of Gas Inside the Unit Before Venting (psia)	914.7
Temperature of Gas Inside the Unit Before Venting (°F)	65.00
Temperature of Gas Inside the Unit Before Venting (°R)	524.67
Duration of Each Event (hours/event)	0.17
Frequency of Events (events/year)	175
Venting Gas Molecular Weight (lb/lb-mol)	21.65
VOC wt %	21.42
benzene wt%	0.082
H_2S wt%	0.001
HAPs wt %	1.166
CO2 wt%	4.879
CH4 wt%	56.628
Are planned MSS vapors (A) uncontrolled; (B) controlled by a flare, vapor combustor, thermal oxidizer, or vapor recovery unit (VRU); or (C) controlled by another type of control device?	(A) uncontrolled
VOC Control Efficiency (%)	0
H_2S Control Efficiency (%)	0

Ideal Gas Constant, [(ft3*psia)/(R*lb-mol)]

10.73159

Gas Molecular Weight and Weight Percents From Inlet Gas Stream from Amine ProMax

Molecular Weight	21.65
VOC wt %	21.42
Benzene wt %	0.082
H2S wt %	0.001
HAPs wt%	1.1656
CO2 wt%	4.8792
CH4 wt%	56.6276

Vapors Captured by Control Device

You need to input these values into the appropriate control device emission calculation tab.

	Hourly Emissions (lb/hr)	**Annual Emissions (tpy)**
VOC Results:	0.00	0.0000
Benzene Results:	0.00	0.0000
H_2S Results:	0.00	0.0000
HAPs Results:	0.00	0.0000
CO2 Results:	0.00	0.0000
CH4 Results:	0.00	0.0000

Planned MSS Emissions

	Hourly Emissions (lb/hr)	**Annual Emissions (tpy)**
VOC Results:	**276.65**	**4.12**
Benzene Results:	**1.06**	**0.02**
H_2S Results:	**0.01**	**<0.01**
HAPs Results:	15.05	0.2239
CO2 Results:	63.01	0.9373
CH4 Results:	731.29	10.8779

VOC Type: (pick from list)
Natural Gas VOC

Emission Type: (pick from list)
High Pressure Periodic

VENTING EMISSION CALCULATION (for blowdowns, starter vents, gas operated controllers, etc):

Emission Unit	MSSB	
Venting Volume per Event (SCF/event):	50000	(standard cubic feet)
Number of events per hour:	1	
Number of events per year:	40	
Venting Gas Molecular Weight	20.94	
VOC wt %	21.42	
HAPs wt%	1.17	
H_2S wt%	0.0008	
VOC & HAP Control Efficiency (%)	95.00	
H_2S Control Efficiency (%)	98.00	

Constant:

379.48 scf/lb-mol

Gas Wt % From Inlet Stream from Amine Pror

VOC wt %	21.42
HAPs wt%	1.17
H2S wt %	0.0008
CO2 wt%	4.8792
CH4 wt%	56.6276

	lb/hr	**tpy**
Uncontrolled VOC Emissions:	591.0	11.8197
Uncontrolled HAPs Emissions:	32.1564	0.6431
Uncontrolled H_2S Emissions:	0.0231	0.0005
VOC Results:	29.5	0.5910
HAPs Results:	1.6078	0.0322
H_2S Results:	0.0005	0.0000

Default VOC emissions for Miscellaneous MSS activities

Company Name	Targa Midstream
Site Name	Roadrunner Gas Processing Plant

Default VOC emissions (tpy) associated with miscellaneous MSS activities	**0.250**
Add default VOC emissions from miscellaneous MSS activities to the emissions summary	Yes

#	Activity	Description / comments	Default parameters		Equation used		Input parameters		Annual emissions (tpy)
MSSM-Glycol	***(b)(2) Glycol dehydration unit*** Emissions associated with replacement of glycol solution used in dehydration unit. There are two vessels in a dehydration unit: contactor and regenerator.	-Calculations based on physical properties of mono ethylene glycol (MEG)(d) because of its low molecular weight and high vapor pressure which gives the most conservative emissions estimate. -Typically the glycol solution used in dehydration unit is not entirely replaced but it is conservatively assumed that the glycol solution is drained once per year for vessel maintenance. -Per field experience, 4000 gal of glycol solution is used in a large dehydration unit. The replacement of glycol solution used in the dehydration unit is an exempt activity pursuant 20.2.72.202.B(2). The vapor pressure of the glycol solution is less than 0.2 psi.	Temperature (°F)	68	Loading loss L_L (lb/1000 gal)	0.0015	Number of Dehy units	4	0.000043
			Vapor pressure (psia)	0.001					
			Saturation factor	1	Loading loss per activity (lb/activity)	0.0059			
			Molecular weight (lb/lbmol)	62.07					
			Glycol solution (gal/activity)	4000					
			Temperature (°F)	68	Clingage loss (lb/activity)	0.0155			
			Vapor pressure (psia)	0.001					
			Molecular weight (lb/lb-mole)	62.07					
			V_V Vessel volume (ft^3) (5 ft radii * 30 ft height)	2355					
			Ideal gas constant (psia-ft3/lb-mol-°R)	10.73					
			Number of activities per year	1	Total (lbs/yr/unit)	0.0213			
MSSM-Amine	***(b)(2) Amine unit*** Emissions associated with replacement of solution used in the amine unit. There are two vessels in an amine unit: Contactor and regenerator.	-Calculations based on physical properties of mono ethanol amine (MEA)(e) because of its low molecular weight and high vapor pressure which gives the most conservative emissions estimate. -Typically the solution used in amine unit is not entirely replaced but it is conservatively assumed that the amine solution is drained once per year for vessel maintenance. -Per field experience, 4000 gal of solution is used in a large amine unit. The replacement of solution used in the amine unit is an exempt activity pursuant 20.2.72.202.B(2). The vapor pressure of the amine solution is less than 0.2 psi.	Temperature (°F)	68	Loading loss L_L (lb/1000 gal)	0.0058	Number of Amine units	2	0.000084
			Vapor pressure (psia)	0.004					
			Saturation factor	1	Loading loss per activity (lb/activity)	0.0231			
			Molecular weight (lb/lbmol)	61.08					
			Amine solution (gal/activity)	4000					
			Temperature (°F)	68	Clingage loss (lb/activity)	0.0609			
			Vapor pressure (psia)	0.004					
			Molecular weight (lb/lb-mole)	61.08					
			V_V Vessel volume (ft^3) (5 ft radii * 30 ft height)	2355					
			Ideal gas constant (psia-ft3/lb-mol-°R)	10.73					
			Number of activities per year	1	Total (lbs/yr/unit)	0.0840			
MSSM-Aerosol	***(b)(2) Aerosol Lubricants***	The use of aerosol lubricants for the maintenance of equipment or control devices is exempt pursuant 20.2.72.202.A(2).							
MSSM-Piping	***(b)(3) Piping Components***	The repositioning or relocating of piping components within the plant that does not reposition or relocate any source of air emission or the emission points from any such source are exempt pursuant 20.2.72.202.A(15). The replacement and maintenance of piping components is exempt pursuant 20.2.72.202.A(2).							
MSSM-Cal	***(b)(2) Calibration***	Use of calibration gases is exempt under 20.2.72.202.A(10) NMAC.							
MSSM-Misc	***(b)(6)*** MSSM-Misc - Safety factor to account for MSS activities with the same character and quantity of emissions as those listed in paragraphs (b) (1) - (5) of §106.359. These activities are exempt pursuant 20.2.72.202.A(2).							1	0.028

		TPY	lbs/hr
	Total VOC emissions	**2.81E-02**	**0.006**

VOC Type: (pick from list)
Crude Oil or Condensate VOC

Emission Type: (pick from list)
Steady State (continuous)

GHG Emissions from Natural Gas Combustion

Emission Source	Source Description	Heat Rate	CO_2 EF	CO_2 Emissions		CH_4 EF	CH_4 Emissions		N_2O EF	N_2O Emissions	
		mmbtu/hr	kg/mmbtu	metric TPY	short tpy	kg/mmbtu	metric TPY	short tpy	kg/mmbtu	metric TPY	short tpy
EP-2	Trim Reboiler	26.5	53.06	12317.35	13577.41	0.001	0.232	0.256	0.0001	0.023	0.026
2-EP-2, 3-EP-2	Trim Reboiler	26.5	53.06	12317.35	13577.41	0.001	0.232	0.256	0.0001	0.023	0.026
EP-3A	Amine Reboiler	70.28	53.06	32666.54	36008.32	0.001	0.616	0.679	0.0001	0.062	0.068
EP-3B	Amine Reboiler	70.28	53.06	32666.54	36008.32	0.001	0.616	0.679	0.0001	0.062	0.068
EP-4	Glycol Reboiler	3.9	53.06	1812.74	1998.19	0.001	0.034	0.038	0.0001	0.003	0.004
2-EP-4, 3-EP-4	Glycol Reboiler	3.9	53.06	1812.74	1998.19	0.001	0.034	0.038	0.0001	0.003	0.004
EP-5	Regen Reboiler	9.5	53.06	4415.65	4867.37	0.001	0.083	0.092	0.0001	0.008	0.009
2-EP-5, 3-EP-5	Regen Reboiler	9.5	53.06	4415.65	4867.37	0.001	0.083	0.092	0.0001	0.008	0.009
EP-6, 2-EP-6	Stabilizer Heater	23.4	53.06	10876.45	11989.11	0.001	0.205	0.226	0.0001	0.020	0.023
EP-9	Thermal Oxidizer	75.00	53.06	34860.42	38426.64	0.001	0.657	0.724	0.0001	0.066	0.072
EP-1	Flare Pilot	0.19	53.06	88.31	97.35	0.001	0.002	0.002	0.0001	0.000	0.000
2/3-EP1	Flare Pilot	0.38	53.06	176.63	194.69	0.001	0.003	0.004	0.0001	0.000	0.000
2-HT-1	Hot Oil Heater	84.77	53.06	39401.57	43432.35	0.001	0.743	0.819	0.0001	0.074	0.082

Emission Factors (EF) from Tables C-1 and C-2 to 40 CFR 98 Subpart C

Emergency Flare GHG Emisssions

§98.233(n) Flare stack GHG emissions.

Step 1. Calculate contribution of un-combusted CH_4 emissions

$E_{a,CH4}$ (un-combusted) = V_a * (1- η)* X_{CH4} *(Equation W-39B)*

where:

$E_{a,CH4}$ = contribution of annual un-combusted CH_4 emissions from regenerator in cubic feet under actual conditions.

V_a = volume of gas sent to combustion unit during the year (cf)

η = Fraction of gas combusted by a burning flare (or regenerator), default value from Subpart W = 0.98
For gas sent to an unlit flare, η is zero.

X_{CH4} = Mole fraction of CH_4 in gas to the flare = 0.7641 (Client gas analysis)

Step 2. Calculate contribution of un-combusted CO_2 emissions

$E_{a,CO2}$ = V_a * X_{CO2} *(Equation W-20)*

where:

$E_{a,CO2}$ = contribution of annual un-combusted CO_2 emissions from regenerator in cubic feet under actual conditions.

V_a = volume of gas sent to combustion unit during the year (cf)

X_{CO2} = Mole fraction of CO_2 in gas to the flare = 0.024

Step 3. Calculate contribution of combusted CO_2 emissions

$E_{a,CO2}$ (combusted) = $\sum$ (η * V_a * Y_j * R_j) *(Equation W-21)*

where:

η = Fraction of gas combusted by a burning flare (or regenerator) = 0.98
For gas sent to an unlit flare, η is zero.

V_a = volume of gas sent to combustion unit during the year (cf)

Y_j = mole fraction of gas hydrocarbon constituents j:

Constituent j, Methane =	0.7641	(Client gas analysis)
Constituent j, Ethane =	0.1118	
Constituent j, Propane =	0.0530	
Constituent j, Butane =	0.0233	
Constituent j, Pentanes Plus =	0.9348	

R_j = number of carbon atoms in the gas hydrocarbon constituent j:

Constituent j, Methane =	1
Constituent j, Ethane =	2
Constituent j, Propane =	3
Constituent j, Butane =	4
Constituent j, Pentanes Plus =	5

Step 4. Calculate GHG volumetric emissions at standard conditions (scf).

$$E_{s,n} = \frac{E_{a,n} * (459.67 + T_s) * P_a}{(459.67 + T_a) * P_s}$$ *(Equation W-33)*

where:

$E_{s,n}$ = GHG i volumetric emissions at standard temperature and pressure (STP) in cubic feet

$E_{a,n}$ = GHG i volumetric emissions at actual conditions (cf)

T_s = Temperature at standard conditions (F) = 60 F
(Based on Annual Avg Max Temperature for Hobbs, NM from Western Regional Climate Center)

T_a = Temperature at actual conditions (F) = 76 F

P_s = Absolute pressure at standard conditions (psia) = 14.7 psia

P_a = Absolute pressure at actual conditions (psia) = 12.73 psia (Assumption)

Constant = 459.67 (temperature conversion from F to R)

Step 5. Calculate annual CH_4 and CO_2 mass emissions (ton).

$Mass_{s,i} = E_{s,i} * \rho_i * 0.001 * 1.1023$ *(Equation W-36)*

where:

$Mass_{s,i}$ = GHG i (CO_2, CH_4, or N_2O) mass emissions at standard conditions in tons (tpy)

$E_{s,i}$ = GHG i (CO_2, CH_4, or N_2O) volumetric emissions at standard conditions (cf)

ρ_i = Density of GHG i. Use:

CH_4:	0.0192	kg/ft^3 (at 60F and 14.7 psia)
CO_2:	0.0526	kg/ft^3 (at 60F and 14.7 psia)

1×10^{-3} = conversion factor from kg to metric tons.

1.1203 = conversion factor from metric tons to short tons.

Step 6. Calculate annual N_2O emissions from portable or stationary fuel combustion sources under actual conditions (cf) using Equation W-40 .

$Mass_{N2O} = 0.001 * Fuel * HHV * EF * 1.1023$ *(Equation W-40)*

where:

$Mass_{N2O}$ = annual N_2O emissions from combustion of a particular type of fuel (tons).

Fuel = mass or volume of the fuel combusted

HHV = high heat value of the fuel

SSM flaring gas HHV =	0.00107	MMBtu/scf
EF =	1.00E-04	kg N_2O/MMBtu

10^{-3} = conversion factor from kg to metric tons.

1.1203 = conversion factor from metric tons to short tons.

Step 7. Calculate total annual emission from flare by summing Equations W-40, W-19, W-20, and W-21.

Gas Sent to Emergency Flare	Gas Sent to Flare (cf/yr)	CH_4 Un-Combusted, $E_{a,CH4}$ (cf)	CO_2 Un-Combusted, $E_{a,CO2}$ (cf)	CO_2 Combusted, $E_{a,CO2}$ (cf)	CH_4 Un-Combusted, $E_{a,CH4}$ (scf)	CO_2 Un-Combusted, $E_{a,CO2}$ (scf)	CO_2 Combusted, $E_{a,CO2}$ (scf)	CH_4 Un-Combusted, $E_{a,CH4}$ (tpy)	CO_2 Un-Combusted, $E_{a,CO2}$ (tpy)	CO_2 Combusted, $E_{a,CO2}$ (tpy)	N_2O Mass Emissions (tpy)	CO2e (tpy)
SSM Flaring (EP-1, 2-EP-1, and 3-EP-1)	240,000,000	3,667,739	5,759,941	1,390,856,608	3,079,617	4,836,334	1,167,832,593	65.18	280.42	67,712.08	0.02831	69,630
Total	**240,000,000**	**3,667,739**	**5,759,940.8**	**1,390,856,608**	**3,079,617**	**4,836,333.6**	**1,167,832,593**	**65.2**	**280.4**	**67,712.1**	**0.02831**	**69,630**
								GWP	1	25	298	

Combuster GHG Emissions

§98.233(n) Flare stack GHG emissions.

Step 1. Calculate contribution of un-combusted CH_4 emissions

$E_{a,CH4}$ (un-combusted) = V_a * (1- η)* X_{CH4} *(Equation W-39B)*

where:

$E_{a,CH4}$ = contribution of annual un-combusted CH_4 emissions from regenerator in cubic feet under actual conditions.

V_a = volume of gas sent to combustion unit during the year (cf)

η = Fraction of gas combusted by a burning flare (or regenerator), default value from Subpart W = 0.98
For gas sent to an unlit flare, η is zero.

X_{CH4} = Mole fraction of CH_4 in gas to the flare = 0.0041 (Client gas analysis)

Step 2. Calculate contribution of un-combusted CO_2 emissions

$E_{a,CO2}$ = V_a * X_{CO2} *(Equation W-20)*

where:

$E_{a,CO2}$ = contribution of annual un-combusted CO_2 emissions from regenerator in cubic feet under actual conditions.

V_a = volume of gas sent to combustion unit during the year (cf)

X_{CO2} = Mole fraction of CO_2 in gas to the flare = 0.000

Step 3. Calculate contribution of combusted CO_2 emissions

$E_{a,CO2}$ (combusted) = $\sum$ (η * V_a * Y_j * R_j) *(Equation W-21)*

where:

η = Fraction of gas combusted by a burning flare (or regenerator) = 0.98
For gas sent to an unlit flare, η is zero.

V_a = volume of gas sent to combustion unit during the year (cf)

Y_j = mole fraction of gas hydrocarbon constituents j:

Constituent j, Methane =	0.0041	(Client gas analysis)
Constituent j, Ethane =	0.0011	
Constituent j, Propane =	0.0027	
Constituent j, Butane =	0.0574	
Constituent j, Pentanes Plus =	0.9348	

R_j = number of carbon atoms in the gas hydrocarbon constituent j:

Constituent j, Methane =	1
Constituent j, Ethane =	2
Constituent j, Propane =	3
Constituent j, Butane =	4
Constituent j, Pentanes Plus =	5

Step 4. Calculate GHG volumetric emissions at standard conditions (scf).

$$E_{s,n} = \frac{E_{a,n} * (459.67 + T_s) * P_a}{(459.67 + T_a) * P_s}$$ *(Equation W-33)*

where:

$E_{s,n}$ = GHG i volumetric emissions at standard temperature and pressure (STP) in cubic feet

$E_{a,n}$ = GHG i volumetric emissions at actual conditions (cf)

T_s = Temperature at standard conditions (F) = 60 F

(Based on Annual Avg Max Temperature for Hobbs, NM from Western Regional Climate Center)

T_a = Temperature at actual conditions (F) = 76 F

P_s = Absolute pressure at standard conditions (psia) = 14.7 psia

P_a = Absolute pressure at actual conditions (psia) = 12.73 psia (Assumption)

Constant = 459.67 (temperature conversion from F to R)

Step 5. Calculate annual CH_4 and CO_2 mass emissions (ton).

$Mass_{s,i}$ = $E_{s,i}$ * ρ_i * 0.001 * 1.1023 *(Equation W-36)*

where:

$Mass_{s,i}$ = GHG i (CO_2, CH_4, or N_2O) mass emissions at standard conditions in tons (tpy)

$E_{s,i}$ = GHG i (CO_2, CH_4, or N_2O) volumetric emissions at standard conditions (cf)

ρ_i = Density of GHG i. Use:

CH_4:	0.0192	kg/ft^3 (at 60F and 14.7 psia)
CO_2:	0.0526	kg/ft^3 (at 60F and 14.7 psia)

1×10^{-3} = conversion factor from kg to metric tons.

1.1203 = conversion factor from metric tons to short tons.

Step 6. Calculate annual N_2O emissions from portable or stationary fuel combustion sources under actual conditions (cf) using Equation W-40 .

$Mass_{N2O}$ = 0.001 * Fuel * HHV * EF*1.1023 *(Equation W-40)*

where:

$Mass_{N2O}$ = annual N_2O emissions from combustion of a particular type of fuel (tons).

Fuel = mass or volume of the fuel combusted

HHV = high heat value of the fuel

SSM flaring gas HHV =	0.00107	MMBtu/scf
EF =	1.00E-04	kg N_2O/MMBtu

1×10^{-3} = conversion factor from kg to metric tons.

1.1203 = conversion factor from metric tons to short tons.

Step 7. Calculate total annual emission from flare by summing Equations W-40, W-19, W-20, and W-21.

Gas Sent to Combuster	Gas Sent to Combuster (cf/yr)	CH_4 Un-Combusted, $E_{a,CH4}$ (cf)	CO_2 Un-Combusted, $E_{a,CO2}$ (cf)	CO_2 Combusted, $E_{a,CO2}$ (cf)	CH_4 Un-Combusted, $E_{a,CH4}$ (scf)	CO_2 Un-Combusted, $E_{a,CO2}$ (scf)	CO_2 Combusted, $E_{a,CO2}$ (scf)	CH_4 Un-Combusted, $E_{a,CH4}$ (tpy)	CO_2 Un-Combusted, $E_{a,CO2}$ (tpy)	CO_2 Combusted, $E_{a,CO2}$ (tpy)	N_2O Mass Emissions (tpy)	CO2e (tpy)
COMB-1	12,745,387	1,033	0	61,425,499	867	0	51,575,913	0.02	0.00	2,990.42	0.00150	2,991
Total	**12,745,387**	**1,033**	**0.0**	**61,425,499**	**867**	**0.0**	**51,575,913**	**0.0**	**0.0**	**2,990.4**	**0.00150**	**2,991**

	CO_2	CH_4	N_2O
GWP	1	25	298

Section 7

Information Used To Determine Emissions

Information Used to Determine Emissions shall include the following:

- ☑ If manufacturer data are used, include specifications for emissions units and control equipment, including control efficiencies specifications and sufficient engineering data for verification of control equipment operation, including design drawings, test reports, and design parameters that affect normal operation.
- ☐ If test data are used, include a copy of the complete test report. If the test data are for an emissions unit other than the one being permitted, the emission units must be identical. Test data may not be used if any difference in operating conditions of the unit being permitted and the unit represented in the test report significantly effect emission rates.
- ☑ If the most current copy of AP-42 is used, reference the section and date located at the bottom of the page. Include a copy of the page containing the emissions factors, and clearly mark the factors used in the calculations.
- ☐ If an older version of AP-42 is used, include a complete copy of the section.
- ☑ If an EPA document or other material is referenced, include a complete copy.
- ☑ Fuel specifications sheet.
- ☑ If computer models are used to estimate emissions, include an input summary (if available) and a detailed report, and a disk containing the input file(s) used to run the model. For tank-flashing emissions, include a discussion of the method used to estimate tank-flashing emissions, relative thresholds (i.e., permit or major source (NSPS, PSD or Title V)), accuracy of the model, the input and output from simulation models and software, all calculations, documentation of any assumptions used, descriptions of sampling methods and conditions, copies of any lab sample analysis.

Heaters and Reboilers (EP-2, 2-EP-2, 3-EP-2, EP-3B, EP-4, 2-EP-4, 3-EP-4, EP-5, 2-EP-5, 3-EP-5, EP-6, 2-EP-6)

- AP-42 Chapter 1.4 *Natural Gas Combustion*
- Manufacturer specifications
- 20.2.50.119.B(1) NMAC
- 40 CFR 98 Subpart C Table C-1 and Table C-2

TEG Glycol Dehydrators (EP-7, 2-EP-7, and 3-EP-7)

- BR&E ProMax

Amine Units

- BR&E ProMax
- Inlet gas analysis dated November 19, 2019

Thermal Oxidizer (EP-9)

- Manufacturer specifications
- 40 CFR 98 Subpart C Table C-1 and Table C-2

Thermal Oxidizer SSM

- BR&E ProMax

Flares (EP-1, 2-EP-1, 3-EP-1)

- TNRCC RG-109 Emission Factors
- Inlet gas analysis dates November 19, 2019
- Residue gas analysis dated September 14, 2021
- Fuel gas analysis dated July 27, 2021
- 40 CFR 98 Subpart C Table C-1 and Table C-2
- Manufacturer specifications

Condensate Tanks (T-1 through T-5)

- BR&E ProMax
- Condensate analysis dated February 3, 2022

Produced Water Storage Tank (T-6)

- BR&E ProMax

Condensate Loading (LOAD)

- AP-42 Chapter 5.2, *Transportation and Marketing of Petroleum Liquids*
- BR&E ProMax

Tank Combustor (COMB-1)

- TNRCC RG-109 Emission Factors
- BR&E ProMax
- 40 CFR 98 Subpart C Table C-1 and Table C-2

Fugitives (FUG)

- Inlet gas analysis dates November 19, 2019
- Residue gas analysis dated September 14, 2021
- Condensate analysis dated February 3, 2022
- Table 2-4 of the EPA Protocol for Equipment Leak Emission Estimates, November 1995

Haul Roads (HAUL)

- AP-42 Chapter 13.2.2, *Unpaved Roads*, Table 13.2.2-2

RR1 TEG
Plant Schematic

Client Name:	Targa Resources	Job:
Location:	Roadrunner Gas Processing Plant	
Flowsheet:	RR1 TEG	

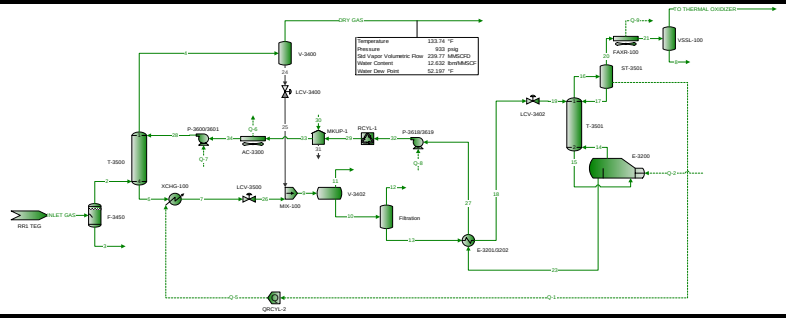

* User Specified Values
? Extrapolated or Approximate Values

Copyright © 2002-2022 BRE Group, Ltd.
Licensed to Trinity Consultants, Inc. and Affiliates

Process Streams Report
All Streams
Tabulated by Total Phase

Client Name:	Targa Resources	Job:	
Location:	Roadrunner Gas Processing Plant		
Flowsheet:	RR1 TEG		

Connections

	DRY GAS	INLET GAS	TO THERMAL OXIDIZER	2	3
From Block	V-3400	RR1 TEG	VSSL-100	F-3450	F-3450
To Block	--	F-3450	--	T-3500	--

Stream Composition

Mole Fraction	DRY GAS %	INLET GAS %	TO THERMAL OXIDIZER %	2 %	3 %
H2S	3.80366E-07	3.82407E-07	2.66108E-05	3.82408E-07	1.6714E-08
CO2	4.40658E-05	4.40228E-05	0.000394377	4.40229E-05	7.03868E-07
N2	1.22353	1.21997	0.0139484	1.21998	0.000828596
Methane	78.2848	78.0698	12.892	78.0701	0.0925067
Ethane	11.4443	11.4173	15.2209	11.4173	0.0126218
Propane	5.42694	5.41593	17.8025	5.41595	0.0033621
i-Butane	0.738641	0.737229	3.21838	0.737232	0.000201419
n-Butane	1.64218	1.63982	12.7018	1.63983	0.000756765
i-Pentane	0.369999	0.369597	3.90612	0.369599	7.7061E-05
n-Pentane	0.388734	0.388456	4.99584	0.388457	5.1789E-05
n-Hexane	0.254564	0.254715	4.64602	0.254716	1.66553E-05
n-Heptane	0.139556	0.139855	2.3199	0.139856	4.52415E-06
n-Octane	0.0211698	0.0212541	0.225743	0.0212542	2.82322E-07
n-Nonane	0	0	0	0	0
n-Decane	0	0	0	0	0
Undecane	0	0	0	0	0
Benzene	0.0209249	0.0223446	7.18745	0.0223447	0.000617231
Toluene	0.0106239	0.0117674	2.93564	0.0117674	0.000204859
Ethylbenzene	0.00428668	0.00488258	0.599235	0.0048826	4.76123E-05
m-Xylene	0.00287172	0.00328332	0.416886	0.00328334	2.58092E-05
Water	0.0266019	0.283708	10.9169	0.283306	98.6355
MDEA	2.82102E-07	3.07719E-06	0.000192111	3.07718E-06	5.82108E-06
Piperazine	3.06644E-05	6.94283E-05	3.80432E-06	6.42966E-05	1.2532
Phosphoric Acid	0	0	0	0	0
TEG	0.000178763	0	1.82956E-08	0	0
O2	0	0	0	0	0

Mass Fraction	DRY GAS %	INLET GAS %	TO THERMAL OXIDIZER %	2 %	3 %
H2S	6.14683E-07	6.1802E-07	1.88447E-05	6.18022E-07	3.01858E-08
CO2	9.19574E-05	9.18734E-05	0.000360643	9.18738E-05	1.64153E-06
N2	1.62525	1.62062	0.00811911	1.62063	0.00123004
Methane	59.5508	59.3909	4.29746	59.3911	0.0786423
Ethane	16.3174	16.2798	9.51001	16.2799	0.0201118
Propane	11.3472	11.3249	16.3116	11.325	0.00785631
i-Butane	2.0357	2.03194	3.88686	2.03195	0.000620374
n-Butane	4.52587	4.51964	15.3401	4.51966	0.00233085
i-Pentane	1.26581	1.26452	5.85591	1.26452	0.000294629
n-Pentane	1.3299	1.32904	7.48959	1.32904	0.000198006
n-Hexane	1.0402	1.04089	8.31926	1.04089	7.60585E-05
n-Heptane	0.663077	0.664539	4.83021	0.664542	2.40229E-05
n-Octane	0.114665	0.115129	0.535808	0.115129	1.70896E-06
n-Nonane	0	0	0	0	0
n-Decane	0	0	0	0	0
Undecane	0	0	0	0	0
Benzene	0.0775032	0.0827666	11.6657	0.0827669	0.00255492
Toluene	0.0464158	0.0514146	5.62035	0.0514148	0.00100025
Ethylbenzene	0.0215795	0.0245808	1.3219	0.0245809	0.000267863
m-Xylene	0.0144565	0.0165296	0.919642	0.0165296	0.0001452
Water	0.0227244	0.24237	4.08659	0.242026	94.1643
MDEA	1.59398E-06	1.73884E-05	0.000475676	1.73883E-05	3.67582E-05

Copyright © 2002-2022 BRE Group, Ltd.
Licensed to Trinity Consultants, Inc. and Affiliates

Process Streams Report
All Streams
Tabulated by Total Phase

Client Name:	Targa Resources	Job:	
Location:	Roadrunner Gas Processing Plant		
Flowsheet:	RR1 TEG		

Mass Fraction	DRY GAS %	INLET GAS %	TO THERMAL OXIDIZER %	2 %	3 %
Piperazine	0.000125244	0.000283586	6.80895E-06	0.000262625	5.72028
Phosphoric Acid	0	0	0	0	0
TEG	0.00127294	0	5.70899E-08	0	0
O2	0	0	0	0	0

Mass Flow	DRY GAS lb/h	INLET GAS lb/h	TO THERMAL OXIDIZER lb/h	2 lb/h	3 lb/h
H2S	0.00341275	0.00344132	2.02755E-05	0.00344131	6.15947E-10
CO2	0.510552	0.511578	0.000388025	0.511578	3.34958E-08
N2	9023.46	9024.1	0.00873557	9024.1	2.50993E-05
Methane	330629	330706	4.62375	330706	0.00160471
Ethane	90594.7	90650.7	10.2321	90650.7	0.000410386
Propane	63000.3	63060.4	17.5501	63060.4	0.000160309
i-Butane	11302.3	11314.4	4.18198	11314.4	1.26588E-05
n-Butane	25127.8	25166.7	16.5048	25166.7	4.75615E-05
i-Pentane	7027.84	7041.19	6.30053	7041.19	6.01197E-06
n-Pentane	7383.69	7400.46	8.05824	7400.46	4.04035E-06
n-Hexane	5775.26	5795.97	8.95091	5795.97	1.55199E-06
n-Heptane	3681.44	3700.35	5.19695	3700.35	4.90191E-07
n-Octane	636.624	641.071	0.57649	641.071	3.48717E-08
n-Nonane	0	0	0	0	0
n-Decane	0	0	0	0	0
Undecane	0	0	0	0	0
Benzene	430.301	460.868	12.5515	460.868	5.21336E-05
Toluene	257.703	286.292	6.04708	286.291	2.04103E-05
Ethylbenzene	119.811	136.873	1.42227	136.873	5.46579E-06
m-Xylene	80.2632	92.0414	0.989467	92.0414	2.96284E-06
Water	126.167	1349.59	4.39687	1347.67	1.92144
MDEA	0.00884987	0.0968236	0.000511792	0.0968228	7.50058E-07
Piperazine	0.695358	1.57909	7.32593E-06	1.46237	0.116723
Phosphoric Acid	0	0	0	0	0
TEG	7.06745	0	6.14246E-08	0	0
O2	0	0	0	0	0

Stream Properties

Property	Units	DRY GAS	INLET GAS	TO THERMAL OXIDIZER	2	3
Temperature	°F	133.739	130.518	120	130.409	130.409
Pressure	psia	947.696	953.696	15.4959	951.696	951.696
Mole Fraction Vapor	%	100	100	100	100	0
Mole Fraction Light Liquid	%	0	0	0	0	100
Mole Fraction Heavy Liquid	%	0	0	0	0	0
Molecular Weight	lb/lbmol	21.0892	21.0879	48.126	21.0879	18.8707
Mass Density	lb/ft^3	3.68629	3.74812	0.121864	3.74033	61.7035
Molar Flow	lbmol/h	26326.4	26405.1	2.23564	26405	0.108132
Mass Flow	lb/h	555205	556829	107.593	556827	2.04052
Vapor Volumetric Flow	ft^3/h	150613	148562	882.891	148871	0.0330697
Liquid Volumetric Flow	gpm	18777.8	18522	110.075	18560.6	0.00412298
Std Vapor Volumetric Flow	MMSCFD	239.771	240.488	0.0203614	240.487	0.000984822
Std Liquid Volumetric Flow	sgpm	3187.36	3191.46	0.374688	3191.46	0.00417905
Specific Gravity		0.728157	0.728111	1.66167	0.728112	0.989333
API Gravity						9.50882
Net Ideal Gas Heating Value	Btu/ft^3	1143.66	1141.05	2354.28	1141.05	41.0659
Net Liquid Heating Value	Btu/lb	20518.2	20470.1	18369.7	20470.2	-186.455
Gross Ideal Gas Heating Value	Btu/ft^3	1260.49	1257.73	2544.39	1257.73	93.9619
Gross Liquid Heating Value	Btu/lb	22620.8	22570.2	19869.2	22570.3	877.269

Warnings

ProMax 6.0.22251.0
Copyright © 2002-2022 BRE Group, Ltd.
Licensed to Trinity Consultants, Inc. and Affiliates

Process Streams Report
All Streams
Tabulated by Total Phase

Client Name:	Targa Resources	Job:
Location:	Roadrunner Gas Processing Plant	
Flowsheet:	RR1 TEG	

ProMax:ProMax!Project!Flowsheets!RR1 TEG!PStreams!DRY GAS!Analyses!Freeze 1!Properties!Water Dew Point
Warning: Water dew point temperature is thermodynamically unstable as other phases will form instead of a free aqueous liquid phase.

Remarks

ProMax 6.0.22251.0
Copyright © 2002-2022 BRE Group, Ltd.
Licensed to Trinity Consultants, Inc. and Affiliates

Process Streams Report
All Streams
Tabulated by Total Phase

Client Name:	Targa Resources	Job:
Location:	Roadrunner Gas Processing Plant	
Flowsheet:	RR1 TEG	

Connections

	4	6	7	8	9
From Block	T-3500	T-3500	XCHG-100	VSSL-100	MIX-100
To Block	V-3400	XCHG-100	LCV-3500	--	V-3402

Stream Composition

Mole Fraction	4 %	6 %	7 %	8 %	9 %
H2S	3.80366E-07	3.49193E-07	3.49193E-07	4.12121E-08	3.49193E-07
CO2	4.40658E-05	9.71396E-06	9.71396E-06	1.9202E-07	9.71396E-06
N2	1.22353	0.00952469	0.00952469	3.15974E-07	0.00952469
Methane	78.2848	2.00511	2.00511	0.000910365	2.00511
Ethane	11.4443	0.775457	0.775457	0.00465595	0.775457
Propane	5.42694	0.567831	0.567831	0.0146942	0.567831
i-Butane	0.738641	0.0867476	0.0867476	0.00537669	0.0867476
n-Butane	1.64218	0.278572	0.278572	0.032833	0.278572
i-Pentane	0.369999	0.0771014	0.0771014	0.0253766	0.0771014
n-Pentane	0.388734	0.0968646	0.0968646	0.0421789	0.0968646
n-Hexane	0.254564	0.100137	0.100137	0.111775	0.100137
n-Heptane	0.139556	0.0786517	0.0786517	0.153906	0.0786517
n-Octane	0.0211698	0.0162285	0.0162285	0.0433097	0.0162285
n-Nonane	0	0	0	0	0
n-Decane	0	0	0	0	0
Undecane	0	0	0	0	0
Benzene	0.0209249	0.16385	0.16385	0.323846	0.16385
Toluene	0.0106239	0.130967	0.130967	0.351498	0.130967
Ethylbenzene	0.00428668	0.069023	0.069023	0.213274	0.069023
m-Xylene	0.00287172	0.0476949	0.0476949	0.147148	0.0476949
Water	0.0266019	33.5225	33.5225	98.5169	33.5225
MDEA	2.82102E-07	0.00627155	0.00627155	0.000270759	0.00627155
Piperazine	3.06644E-05	0.017654	0.017654	0.00915317	0.017654
Phosphoric Acid	0	0	0	0	0
TEG	0.000178763	61.9498	61.9498	0.002917	61.9498
O2	0	0	0	0	0

Mass Fraction	4 %	6 %	7 %	8 %	9 %
H2S	6.14683E-07	1.18069E-07	1.18069E-07	7.35398E-08	1.18069E-07
CO2	9.19574E-05	4.24132E-06	4.24132E-06	4.42465E-07	4.24132E-06
N2	1.62525	0.00264713	0.00264713	4.63451E-07	0.00264713
Methane	59.5508	0.31913	0.31913	0.000764668	0.31913
Ethane	16.3174	0.231332	0.231332	0.00733017	0.231332
Propane	11.3472	0.248412	0.248412	0.0339257	0.248412
i-Butane	2.0357	0.0500216	0.0500216	0.0163623	0.0500216
n-Butane	4.52587	0.160634	0.160634	0.099917	0.160634
i-Pentane	1.26581	0.0551886	0.0551886	0.0958625	0.0551886
n-Pentane	1.3299	0.069335	0.069335	0.159335	0.069335
n-Hexane	1.0402	0.0856121	0.0856121	0.504329	0.0856121
n-Heptane	0.663077	0.0781884	0.0781884	0.807454	0.0781884
n-Octane	0.114665	0.0183913	0.0183913	0.259027	0.0183913
n-Nonane	0	0	0	0	0
n-Decane	0	0	0	0	0
Undecane	0	0	0	0	0
Benzene	0.0775032	0.126976	0.126976	1.32447	0.126976
Toluene	0.0464158	0.119719	0.119719	1.6957	0.119719
Ethylbenzene	0.0215795	0.0726998	0.0726998	1.18551	0.0726998
m-Xylene	0.0144565	0.0502356	0.0502356	0.817943	0.0502356
Water	0.0227244	5.9915	5.9915	92.9262	5.9915
MDEA	1.59398E-06	0.00741433	0.00741433	0.0016893	0.00741433
Piperazine	0.000125244	0.0150863	0.0150863	0.0412801	0.0150863
Phosphoric Acid	0	0	0	0	0
TEG	0.00127294	92.2975	92.2975	0.0229358	92.2975

Copyright © 2002-2022 BRE Group, Ltd.
Licensed to Trinity Consultants, Inc. and Affiliates

Process Streams Report
All Streams
Tabulated by Total Phase

Client Name:	Targa Resources	Job:
Location:	Roadrunner Gas Processing Plant	
Flowsheet:	RR1 TEG	

Mass Fraction	4 %	6 %	7 %	8 %	9 %
O2	0	0	0	0	0

Mass Flow	4 lb/h	6 lb/h	7 lb/h	8 lb/h	9 lb/h
H2S	0.00341275	2.85643E-05	2.85643E-05	9.61833E-07	2.85643E-05
CO2	0.510552	0.0010261	0.0010261	5.78704E-06	0.0010261
N2	9023.46	0.640419	0.640419	6.06151E-06	0.640419
Methane	330629	77.207	77.207	0.0100012	77.207
Ethane	90594.7	55.9661	55.9661	0.0958719	55.9661
Propane	63000.3	60.0983	60.0983	0.443717	60.0983
i-Butane	11302.3	12.1017	12.1017	0.214004	12.1017
n-Butane	25127.8	38.8621	38.8621	1.30682	38.8621
i-Pentane	7027.84	13.3518	13.3518	1.25379	13.3518
n-Pentane	7383.69	16.7742	16.7742	2.08395	16.7742
n-Hexane	5775.26	20.7121	20.7121	6.59617	20.7121
n-Heptane	3681.44	18.9161	18.9161	10.5608	18.9161
n-Octane	636.624	4.44939	4.44939	3.38784	4.44939
n-Nonane	0	0	0	0	0
n-Decane	0	0	0	0	0
Undecane	0	0	0	0	0
Benzene	430.301	30.7193	30.7193	17.3229	30.7193
Toluene	257.703	28.9635	28.9635	22.1782	28.9635
Ethylbenzene	119.811	17.5882	17.5882	15.5054	17.5882
m-Xylene	80.2632	12.1535	12.1535	10.698	12.1535
Water	126.167	1449.52	1449.52	1215.39	1449.52
MDEA	0.00884987	1.79375	1.79375	0.0220945	1.79375
Piperazine	0.695358	3.64982	3.64982	0.539906	3.64982
Phosphoric Acid	0	0	0	0	0
TEG	7.06745	22329.5	22329.5	0.29998	22329.5
O2	0	0	0	0	0

Stream Properties

Property	Units	4	6	7	8	9
Temperature	°F	133.853	133.384	143.959	120	147.106
Pressure	psia	949.696	951.696	948.696	15.4959	79.6959
Mole Fraction Vapor	%	100	0	0.00661583	0	3.26649
Mole Fraction Light Liquid	%	0	100	99.9934	1.45984	96.7335
Mole Fraction Heavy Liquid	%	0	0	0	98.5402	0
Molecular Weight	lb/lbmol	21.0892	100.796	100.796	19.0991	100.796
Mass Density	lb/ft^3	3.69395	66.6951	66.347	60.5298	24.6231
Molar Flow	lbmol/h	26326.4	240.02	240.02	68.48	240.02
Mass Flow	lb/h	555205	24193	24193	1307.91	24193
Vapor Volumetric Flow	ft^3/h	150301	362.74	364.643	21.6077	982.53
Liquid Volumetric Flow	gpm	18738.8	45.2247	45.462	2.69395	122.497
Std Vapor Volumetric Flow	MMSCFD	239.771	2.18601	2.18601	0.62369	2.18601
Std Liquid Volumetric Flow	sgpm	3187.36	44.1014	44.1014	2.66022	44.1014
Specific Gravity		0.728157	1.06937		0.970514	
API Gravity			-3.34403		12.3248	
Net Ideal Gas Heating Value	Btu/ft^3	1143.66	2428.61	2428.61	64.2374	2428.61
Net Liquid Heating Value	Btu/lb	20518.2	8838	8838	279.179	8838
Gross Ideal Gas Heating Value	Btu/ft^3	1260.49	2670.81	2670.81	117.485	2670.81
Gross Liquid Heating Value	Btu/lb	22620.8	9749.86	9749.86	1337.17	9749.86

Remarks

ProMax 6.0.22251.0
Copyright © 2002-2022 BRE Group, Ltd.
Licensed to Trinity Consultants, Inc. and Affiliates

Process Streams Report
All Streams
Tabulated by Total Phase

Client Name:	Targa Resources	Job:
Location:	Roadrunner Gas Processing Plant	
Flowsheet:	RR1 TEG	

Connections

	10	11	12	13	14
From Block	V-3402	V-3402	Filtration	Filtration	E-3200
To Block	Filtration	--	--	E-3201/3202	T-3501

Stream Composition

Mole Fraction	10 %	11 %	12 %	13 %	14 %
H2S	2.69062E-07	2.72217E-06	2.89266E-06	2.68472E-07	4.68216E-09
CO2	3.89721E-06	0.00018197	0.000191802	3.85495E-06	1.44386E-08
N2	0.000184436	0.286126	0.222523	0.000134431	4.01931E-08
Methane	0.136898	57.3302	55.5591	0.124433	9.7532E-05
Ethane	0.152404	19.2265	19.8761	0.147968	0.000310137
Propane	0.178602	12.0944	12.6623	0.175794	0.000666898
i-Butane	0.0329723	1.67925	1.76346	0.0325831	0.000170963
n-Butane	0.133078	4.5872	4.83534	0.132021	0.000979327
i-Pentane	0.0453398	1.01769	1.0745	0.0451084	0.000538538
n-Pentane	0.0608247	1.16415	1.2302	0.0605617	0.000822535
n-Hexane	0.0779051	0.758505	0.802461	0.0777421	0.0026722
n-Heptane	0.0678458	0.398656	0.42172	0.0677662	0.00269467
n-Octane	0.0149687	0.053536	0.0566029	0.0149594	0.000931776
n-Nonane	0	0	0	0	0
n-Decane	0	0	0	0	0
Undecane	0	0	0	0	0
Benzene	0.165589	0.112359	0.11923	0.165599	0.0405911
Toluene	0.133701	0.0500194	0.0530302	0.133719	0.0614306
Ethylbenzene	0.0708073	0.0161831	0.0171346	0.0708193	0.0548786
m-Xylene	0.0489378	0.0108899	0.0115301	0.0489462	0.0392179
Water	34.6135	1.2136	1.29399	34.621	92.5185
MDEA	0.0064833	1.0109E-06	1.07052E-06	0.00648476	0.00278989
Piperazine	0.018245	0.000151196	0.000160542	0.0182491	0.0726995
Phosphoric Acid	0	0	0	0	0
TEG	64.0417	0.000392645	0.000414797	64.0561	7.19998
O2	0	0	0	0	0

Mass Fraction	10 %	11 %	12 %	13 %	14 %
H2S	8.87831E-08	3.42284E-06	3.56948E-06	8.85738E-08	5.75196E-09
CO2	1.66061E-06	0.000295467	0.000305629	1.64233E-06	2.2905E-08
N2	5.0024E-05	0.295723	0.225702	3.64553E-05	4.05861E-08
Methane	0.0212635	33.9325	32.2717	0.0193242	5.63998E-05
Ethane	0.0443694	21.3295	21.6395	0.0430708	0.00033615
Propane	0.0762514	19.6763	20.2164	0.0750404	0.00106002
i-Butane	0.0185548	3.60096	3.71111	0.0183328	0.000358182
n-Butane	0.0748887	9.83673	10.1757	0.0742814	0.00205177
i-Pentane	0.031672	2.70897	2.80693	0.0315051	0.00140057
n-Pentane	0.0424889	3.09884	3.21365	0.0422982	0.00213916
n-Hexane	0.0650003	2.41159	2.50382	0.0648537	0.00830064
n-Heptane	0.0658212	1.47379	1.53001	0.0657332	0.00973287
n-Octane	0.0165549	0.225622	0.234104	0.0165418	0.00383659
n-Nonane	0	0	0	0	0
n-Decane	0	0	0	0	0
Undecane	0	0	0	0	0
Benzene	0.125232	0.323806	0.337209	0.125219	0.11429
Toluene	0.119273	0.170036	0.176913	0.119269	0.204026
Ethylbenzene	0.0727823	0.0633877	0.0658643	0.0727827	0.210012
m-Xylene	0.0503028	0.0426548	0.044321	0.0503032	0.150081
Water	6.03745	0.806637	0.844051	6.03776	60.0799
MDEA	0.00747999	4.44435E-06	4.61878E-06	0.00748044	0.0119835
Piperazine	0.0152157	0.000480492	0.000500688	0.0152166	0.225722
Phosphoric Acid	0	0	0	0	0
TEG	93.1153	0.00217547	0.0022554	93.1209	38.9747

Copyright © 2002-2022 BRE Group, Ltd.
Licensed to Trinity Consultants, Inc. and Affiliates

Process Streams Report
All Streams
Tabulated by Total Phase

Client Name:	Targa Resources	Job:
Location:	Roadrunner Gas Processing Plant	
Flowsheet:	RR1 TEG	

Mass Fraction	10 %	11 %	12 %	13 %	14 %
O2	0	0	0	0	0

Mass Flow	10 lb/h	11 lb/h	12 lb/h	13 lb/h	14 lb/h
H2S	2.12906E-05	7.27367E-06	5.14677E-08	2.12391E-05	8.26505E-08
CO2	0.000398222	0.000627879	4.40682E-06	0.000393815	3.29124E-07
N2	0.011996	0.628423	0.00325436	0.00874163	5.83185E-07
Methane	5.09908	72.1079	0.465321	4.63375	0.000810415
Ethane	10.64	45.3261	0.312016	10.328	0.00483017
Propane	18.2854	41.8128	0.291497	17.9939	0.0152315
i-Butane	4.44954	7.65218	0.05351	4.39603	0.00514675
n-Butane	17.9587	20.9034	0.146722	17.8119	0.0294821
i-Pentane	7.59509	5.75667	0.0404727	7.55462	0.0201249
n-Pentane	10.189	6.58515	0.0463372	10.1427	0.0307378
n-Hexane	15.5874	5.12472	0.0361021	15.5513	0.119273
n-Heptane	15.7842	3.13187	0.022061	15.7622	0.139852
n-Octane	3.96993	0.479457	0.00337551	3.96656	0.0551284
n-Nonane	0	0	0	0	0
n-Decane	0	0	0	0	0
Undecane	0	0	0	0	0
Benzene	30.0312	0.688101	0.00486216	30.0263	1.64224
Toluene	28.6022	0.361333	0.00255088	28.5996	2.93167
Ethylbenzene	17.4535	0.134701	0.000949687	17.4526	3.01768
m-Xylene	12.0628	0.0906432	0.000639058	12.0622	2.15652
Water	1447.81	1.71414	0.0121703	1447.8	863.294
MDEA	1.79374	9.44442E-06	6.65975E-08	1.79374	0.172193
Piperazine	3.6488	0.00102106	7.21935E-06	3.6488	3.24342
Phosphoric Acid	0	0	0	0	0
TEG	22329.5	0.00462297	3.25202E-05	22329.5	560.031
O2	0	0	0	0	0

Stream Properties

Property	Units	10	11	12	13	14
Temperature	°F	147.106	147.106	147.124	147.124	400 *
Pressure	psia	79.6959	79.6959	74.6959	74.6959	16.6959
Mole Fraction Vapor	%	0	100	100	0	100
Mole Fraction Light Liquid	%	100	0	0	100	0
Mole Fraction Heavy Liquid	%	0	0	0	0	0
Molecular Weight	lb/lbmol	103.284	27.1043	27.6188	103.301	27.7422
Mass Density	lb/ft^3	67.2229	0.339572	0.324121	67.2291	0.0505802
Molar Flow	lbmol/h	232.18	7.84023	0.0522067	232.127	51.7951
Mass Flow	lb/h	23980.5	212.504	1.44189	23979	1436.91
Vapor Volumetric Flow	ft^3/h	356.73	625.799	4.4486	356.676	28408.5
Liquid Volumetric Flow	gpm	44.4755	78.0217	0.55463	44.4687	3541.85
Std Vapor Volumetric Flow	MMSCFD	2.1146	0.0714058	0.000475479	2.11413	0.47173
Std Liquid Volumetric Flow	sgpm	43.0298	1.07161	0.00720546	43.0226	2.74983
Specific Gravity		1.07783	0.935842	0.953605	1.07793	0.957865
API Gravity		-5.06168			-5.07355	
Net Ideal Gas Heating Value	Btu/ft^3	2461.79	1446.29	1472.14	2462.01	283.506
Net Liquid Heating Value	Btu/lb	8737.86	20138.1	20113	8737.18	3138.31
Gross Ideal Gas Heating Value	Btu/ft^3	2707.48	1585.07	1612.79	2707.72	356.03
Gross Liquid Heating Value	Btu/lb	9640.58	22081.7	22046.1	9639.83	4130.36

Remarks

ProMax 6.0.22251.0
Copyright © 2002-2022 BRE Group, Ltd.
Licensed to Trinity Consultants, Inc. and Affiliates

Process Streams Report
All Streams
Tabulated by Total Phase

Client Name:	Targa Resources	Job:
Location:	Roadrunner Gas Processing Plant	
Flowsheet:	RR1 TEG	

Connections

	15	16	17	18	19
From Block	T-3501	T-3501	ST-3501	E-3201/3202	LCV-3402
To Block	E-3200	ST-3501	T-3501	LCV-3402	T-3501

Stream Composition

Mole Fraction	15 %	16 %	17 %	18 %	19 %
H2S	1.16244E-09	8.19577E-07	1.84549E-09	2.68472E-07	2.68472E-07
CO2	3.53367E-09	1.17678E-05	7.38612E-09	3.85495E-06	3.85495E-06
N2	9.7754E-09	0.000410355	1.28497E-08	0.000134431	0.000134431
Methane	2.3751E-05	0.379836	2.68972E-05	0.124433	0.124433
Ethane	7.57046E-05	0.451679	5.05271E-05	0.147968	0.147968
Propane	0.000163175	0.536617	6.80752E-05	0.175794	0.175794
i-Butane	4.19093E-05	0.0994601	9.2589E-06	0.0325831	0.0325831
n-Butane	0.000240499	0.402994	7.06982E-05	0.132021	0.132021
i-Pentane	0.000132779	0.13769	2.0188E-05	0.0451084	0.0451084
n-Pentane	0.000203061	0.184859	2.84311E-05	0.0605617	0.0605617
n-Hexane	0.000672025	0.237248	3.87879E-05	0.0777421	0.0777421
n-Heptane	0.000675472	0.206802	2.9111E-05	0.0677662	0.0677662
n-Octane	0.000235507	0.0456386	6.75974E-06	0.0149594	0.0149594
n-Nonane	0	0	0	0	0
n-Decane	0	0	0	0	0
Undecane	0	0	0	0	0
Benzene	0.0107735	0.50316	0.00317624	0.165599	0.165599
Toluene	0.0168289	0.403061	0.00318541	0.133719	0.133719
Ethylbenzene	0.0156509	0.209795	0.0017085	0.0708193	0.0708193
m-Xylene	0.0111831	0.144852	0.00121013	0.0489462	0.0489462
Water	28.4121	95.5929	93.542	34.621	34.621
MDEA	0.00764901	0.000298814	0.000704119	0.00648476	0.00648476
Piperazine	0.0345897	0.020907	0.180724	0.0182491	0.0182491
Phosphoric Acid	0	0	0	0	0
TEG	71.4888	0.441783	6.26694	64.0561	64.0561
O2	0	0	0	0	0

Mass Fraction	15 %	16 %	17 %	18 %	19 %
H2S	3.51936E-10	1.36479E-06	2.37987E-09	8.85738E-08	8.85738E-08
CO2	1.38151E-09	2.5305E-05	1.22997E-08	1.64233E-06	1.64233E-06
N2	2.43267E-09	0.000561682	1.36204E-08	3.64553E-05	3.64553E-05
Methane	3.38482E-06	0.297737	1.63271E-05	0.0193242	0.0193242
Ethane	2.0222E-05	0.663612	5.74877E-05	0.0430708	0.0430708
Propane	6.39193E-05	1.15618	0.000113583	0.0750404	0.0750404
i-Butane	2.16389E-05	0.282459	2.03625E-05	0.0183328	0.0183328
n-Butane	0.000124176	1.14447	0.000155482	0.0742814	0.0742814
i-Pentane	8.51022E-05	0.485397	5.51129E-05	0.0315051	0.0315051
n-Pentane	0.000130148	0.651679	7.76162E-05	0.0422982	0.0422982
n-Hexane	0.000514459	0.998967	0.000126476	0.0648537	0.0648537
n-Heptane	0.000601265	1.0125	0.000110373	0.0657332	0.0657332
n-Octane	0.00023898	0.254725	2.9217E-05	0.0165418	0.0165418
n-Nonane	0	0	0	0	0
n-Decane	0	0	0	0	0
Undecane	0	0	0	0	0
Benzene	0.00747577	1.92038	0.00938773	0.125219	0.125219
Toluene	0.0137746	1.81458	0.0111055	0.119269	0.119269
Ethylbenzene	0.0147606	1.08828	0.00686319	0.0727827	0.0727827
m-Xylene	0.0105469	0.751399	0.00486122	0.0503032	0.0503032
Water	4.54701	84.1457	63.7644	6.03776	6.03776
MDEA	0.00809704	0.00173982	0.00317479	0.00748044	0.00748044
Piperazine	0.0264674	0.0879914	0.589018	0.0152166	0.0152166
Phosphoric Acid	0	0	0	0	0
TEG	95.3701	3.24165	35.6105	93.1209	93.1209

Copyright © 2002-2022 BRE Group, Ltd.
Licensed to Trinity Consultants, Inc. and Affiliates

Process Streams Report
All Streams
Tabulated by Total Phase

Client Name:	Targa Resources	Job:
Location:	Roadrunner Gas Processing Plant	
Flowsheet:	RR1 TEG	

Mass Fraction	15 %	16 %	17 %	18 %	19 %
O2	0	0	0	0	0

Mass Flow	15 lb/h	16 lb/h	17 lb/h	18 lb/h	19 lb/h
H2S	8.44662E-08	2.12407E-05	3.35162E-09	2.12391E-05	2.12391E-05
CO2	3.31569E-07	0.00039383	1.73219E-08	0.000393815	0.000393815
N2	5.83851E-07	0.00874165	1.91819E-08	0.00874163	0.00874163
Methane	0.00081237	4.63378	2.29937E-05	4.63375	4.63375
Ethane	0.00485337	10.328	8.0961E-05	10.328	10.328
Propane	0.0153409	17.994	0.000159962	17.9939	17.9939
i-Butane	0.00519342	4.39601	2.86769E-05	4.39603	4.39603
n-Butane	0.0298028	17.8118	0.000218969	17.8119	17.8119
i-Pentane	0.0204249	7.5544	7.76166E-05	7.55462	7.55462
n-Pentane	0.0312361	10.1423	0.000109308	10.1427	10.1427
n-Hexane	0.123472	15.5473	0.000178119	15.5513	15.5513
n-Heptane	0.144306	15.7579	0.000155441	15.7622	15.7622
n-Octane	0.0573561	3.96437	4.11468E-05	3.96656	3.96656
n-Nonane	0	0	0	0	0
n-Decane	0	0	0	0	0
Undecane	0	0	0	0	0
Benzene	1.79422	29.8875	0.0132209	30.0263	30.0263
Toluene	3.30595	28.241	0.01564	28.5996	28.5996
Ethylbenzene	3.5426	16.9373	0.00966556	17.4526	17.4526
m-Xylene	2.53131	11.6943	0.00684615	12.0622	12.0622
Water	1091.3	1309.59	89.8006	1447.8	1447.8
MDEA	1.94332	0.0270775	0.00447112	1.79374	1.79374
Piperazine	6.3523	1.36944	0.829526	3.6488	3.6488
Phosphoric Acid	0	0	0	0	0
TEG	22889.2	50.4509	50.1509	22329.5	22329.5
O2	0	0	0	0	0

Stream Properties

Property	Units	15	16	17	18	19
Temperature	°F	299.067	290.841	215	315 *	290.008
Pressure	psia	16.6959	15.6959	15.6959	73.6959	15.6959 *
Mole Fraction Vapor	%	0	100	0	0.436806	11.0076
Mole Fraction Light Liquid	%	100	0	100	99.5632	88.9924
Mole Fraction Heavy Liquid	%	0	0	0	0	0
Molecular Weight	lb/lbmol	112.569	20.4661	26.4283	103.301	103.301
Mass Density	lb/ft^3	62.2014	0.0401621	62.5471	47.7284	1.7916
Molar Flow	lbmol/h	213.207	76.0445	5.32883	232.127	232.127
Mass Flow	lb/h	24000.4	1556.33	140.832	23979	23979
Vapor Volumetric Flow	ft^3/h	385.85	38751.3	2.25161	502.405	13384.2
Liquid Volumetric Flow	gpm	48.106	4831.34	0.280721	62.6375	1668.67
Std Vapor Volumetric Flow	MMSCFD	1.94181	0.692584	0.0485329	2.11413	2.11413
Std Liquid Volumetric Flow	sgpm	42.7375	3.3056	0.270689	43.0226	43.0226
Specific Gravity		0.997316	0.706641	1.00286		
API Gravity		-5.87181		2.47988		
Net Ideal Gas Heating Value	Btu/ft^3	2704.05	144.081	242.883	2462.01	2462.01
Net Liquid Heating Value	Btu/lb	8819.71	1750.48	2717.8	8737.18	8737.18
Gross Ideal Gas Heating Value	Btu/ft^3	2970.09	202.498	312.468	2707.72	2707.72
Gross Liquid Heating Value	Btu/lb	9716.58	2833.68	3716.97	9639.83	9639.83

Remarks

ProMax 6.0.22251.0
Copyright © 2002-2022 BRE Group, Ltd.
Licensed to Trinity Consultants, Inc. and Affiliates

Process Streams Report
All Streams
Tabulated by Total Phase

Client Name:	Targa Resources	Job:
Location:	Roadrunner Gas Processing Plant	
Flowsheet:	RR1 TEG	

Connections

	20	21	23	24	25
From Block	ST-3501	FAXR-100	E-3200	V-3400	LCV-3400
To Block	FAXR-100	VSSL-100	E-3201/3202	LCV-3400	MIX-100

Stream Composition

Mole Fraction	20 %	21 %	23 %	24 %	25 %
H2S	8.81198E-07	8.81198E-07	3.30067E-11		
CO2	1.2654E-05	1.2654E-05	3.44194E-11		
N2	0.000441277	0.000441277	1.47252E-11		
Methane	0.408457	0.408457	7.55083E-08		
Ethane	0.485712	0.485712	4.77816E-07		
Propane	0.577049	0.577049	1.53635E-06		
i-Butane	0.106954	0.106954	4.97471E-07		
n-Butane	0.433357	0.433357	3.41774E-06		
i-Pentane	0.148064	0.148064	2.5756E-06		
n-Pentane	0.198787	0.198787	4.27909E-06		
n-Hexane	0.255123	0.255123	3.01932E-05		
n-Heptane	0.222383	0.222383	2.75359E-05		
n-Octane	0.0490772	0.0490772	1.20824E-05		
n-Nonane	0	0	0		
n-Decane	0	0	0		
Undecane	0	0	0		
Benzene	0.540836	0.540836	0.00120537		
Toluene	0.433194	0.433194	0.00251668		
Ethylbenzene	0.225476	0.225476	0.00306321		
m-Xylene	0.155676	0.155676	0.00218707		
Water	95.7474	95.7474	7.84107		
MDEA	0.000268272	0.000268272	0.00920824		
Piperazine	0.00886392	0.00886392	0.0223607		
Phosphoric Acid	0	0	0		
TEG	0.00282478	0.00282478	92.1183		
O2	0	0	0		

Mass Fraction	20 %	21 %	23 %	24 %	25 %
H2S	1.50034E-06	1.50034E-06	8.04713E-12		
CO2	2.78214E-05	2.78214E-05	1.08362E-11		
N2	0.000617564	0.000617564	2.95091E-12		
Methane	0.327358	0.327358	8.66551E-09		
Ethane	0.729631	0.729631	1.0278E-07		
Propane	1.2712	1.2712	4.84634E-07		
i-Butane	0.31056	0.31056	2.06842E-07		
n-Butane	1.25833	1.25833	1.42105E-06		
i-Pentane	0.533685	0.533685	1.32934E-06		
n-Pentane	0.716509	0.716509	2.20856E-06		
n-Hexane	1.09834	1.09834	1.86132E-05		
n-Heptane	1.11323	1.11323	1.9738E-05		
n-Octane	0.280065	0.280065	9.87319E-06		
n-Nonane	0	0	0		
n-Decane	0	0	0		
Undecane	0	0	0		
Benzene	2.11051	2.11051	0.000673543		
Toluene	1.99402	1.99402	0.00165881		
Ethylbenzene	1.19588	1.19588	0.00232641		
m-Xylene	0.825674	0.825674	0.00166101		
Water	86.1734	86.1734	1.01052		
MDEA	0.00159706	0.00159706	0.00784953		
Piperazine	0.0381429	0.0381429	0.0137783		
Phosphoric Acid	0	0	0		
TEG	0.0211925	0.0211925	98.9615		

Copyright © 2002-2022 BRE Group, Ltd.
Licensed to Trinity Consultants, Inc. and Affiliates

Process Streams Report
All Streams
Tabulated by Total Phase

Client Name:	Targa Resources	Job:	
Location:	Roadrunner Gas Processing Plant		
Flowsheet:	RR1 TEG		

Mass Fraction	20 %	21 %	23 %	24 %	25 %
O2	0	0	0		

Mass Flow	20 lb/h	21 lb/h	23 lb/h	24 lb/h	25 lb/h
H2S	2.12373E-05	2.12373E-05	1.81572E-09	0	0
CO2	0.000393812	0.000393812	2.44504E-09	0	0
N2	0.00874163	0.00874163	6.65829E-10	0	0
Methane	4.63375	4.63375	1.95524E-06	0	0
Ethane	10.3279	10.3279	2.31908E-05	0	0
Propane	17.9938	17.9938	0.00010935	0	0
i-Butane	4.39598	4.39598	4.66708E-05	0	0
n-Butane	17.8116	17.8116	0.000320639	0	0
i-Pentane	7.55432	7.55432	0.000299946	0	0
n-Pentane	10.1422	10.1422	0.000498328	0	0
n-Hexane	15.5471	15.5471	0.00419979	0	0
n-Heptane	15.7577	15.7577	0.00445359	0	0
n-Octane	3.96433	3.96433	0.00222774	0	0
n-Nonane	0	0	0	0	0
n-Decane	0	0	0	0	0
Undecane	0	0	0	0	0
Benzene	29.8743	29.8743	0.151975	0	0
Toluene	28.2253	28.2253	0.374287	0	0
Ethylbenzene	16.9277	16.9277	0.524921	0	0
m-Xylene	11.6874	11.6874	0.374782	0	0
Water	1219.79	1219.79	228.009	0	0
MDEA	0.0226063	0.0226063	1.77113	0	0
Piperazine	0.539913	0.539913	3.10888	0	0
Phosphoric Acid	0	0	0	0	0
TEG	0.29998	0.29998	22329.2	0	0
O2	0	0	0	0	0

Stream Properties

Property	Units	20	21	23	24	25
Temperature	°F	215 *	120 *	400		
Pressure	psia	15.6959	15.4959	16.6959	947.696	79.6959 *
Mole Fraction Vapor	%	100	3.16146	0		
Mole Fraction Light Liquid	%	0	1.41368	100		
Mole Fraction Heavy Liquid	%	0	95.4249	0		
Molecular Weight	lb/lbmol	20.0168	20.0168	139.789		
Mass Density	lb/ft^3	0.0437854	1.56496	58.0717		
Molar Flow	lbmol/h	70.7156	70.7156	161.412	0	0
Mass Flow	lb/h	1415.5	1415.5	22563.5	0	0
Vapor Volumetric Flow	ft^3/h	32328.2	904.499	388.546	0	0
Liquid Volumetric Flow	gpm	4030.52	112.769	48.4421	0	0
Std Vapor Volumetric Flow	MMSCFD	0.644051	0.644051	1.47008	0	0
Std Liquid Volumetric Flow	sgpm	3.03491	3.03491	39.9877	0	0
Specific Gravity		0.691128		0.931102		
API Gravity				-6.66826		
Net Ideal Gas Heating Value	Btu/ft^3	136.636	136.636	3480.77		
Net Liquid Heating Value	Btu/lb	1654.24	1654.24	9181.52		
Gross Ideal Gas Heating Value	Btu/ft^3	194.211	194.211	3808.91		
Gross Liquid Heating Value	Btu/lb	2745.8	2745.8	10072.3		

Remarks

ProMax 6.0.22251.0
Copyright © 2002-2022 BRE Group, Ltd.
Licensed to Trinity Consultants, Inc. and Affiliates

Process Streams Report
All Streams
Tabulated by Total Phase

Client Name:	Targa Resources	Job:
Location:	Roadrunner Gas Processing Plant	
Flowsheet:	RR1 TEG	

Connections

	26	27	28	29	30
From Block	LCV-3500	E-3201/3202	P-3600/3601	RCYL-1	--
To Block	MIX-100	P-3618/3619	T-3500	MKUP-1	MKUP-1

Stream Composition

Mole Fraction	26 %	27 %	28 %	29 %	30 %
H2S	3.49193E-07	3.30067E-11	0	3.30911E-11	0
CO2	9.71396E-06	3.44194E-11	0	3.45617E-11	0
N2	0.00952469	1.47252E-11	0	1.47046E-11	0
Methane	2.00511	7.55083E-08	7.55964E-08	7.56205E-08	0
Ethane	0.775457	4.77816E-07	4.79295E-07	4.79448E-07	0
Propane	0.567831	1.53635E-06	1.54174E-06	1.54223E-06	0
i-Butane	0.0867476	4.97471E-07	4.99274E-07	4.99433E-07	0
n-Butane	0.278572	3.41774E-06	3.42945E-06	3.43054E-06	0
i-Pentane	0.0771014	2.5756E-06	2.58376E-06	2.58458E-06	0
n-Pentane	0.0968646	4.27909E-06	4.29203E-06	4.2934E-06	0
n-Hexane	0.100137	3.01932E-05	3.02548E-05	3.02645E-05	0
n-Heptane	0.0786517	2.75359E-05	2.75921E-05	2.76009E-05	0
n-Octane	0.0162285	1.20824E-05	1.21025E-05	1.21063E-05	0
n-Nonane	0	0	0	0	0
n-Decane	0	0	0	0	0
Undecane	0	0	0	0	0
Benzene	0.16385	0.00120537	0.00120648	0.00120687	0
Toluene	0.130967	0.00251668	0.0025188	0.0025196	0
Ethylbenzene	0.069023	0.00306321	0.00306602	0.003067	0
m-Xylene	0.0476949	0.00218707	0.00218909	0.00218979	0
Water	33.5225	7.84107	7.83927	7.8415	0.827516
MDEA	0.00627155	0.00920824	0.00886588	0.00886871	0
Piperazine	0.017654	0.0223607	0.0207288	0.0207354	0
Phosphoric Acid	0	0	0	0	0
TEG	61.9498	92.1183	92.1221	92.1198	99.1725
O2	0	0	0	0	0

Mass Fraction	26 %	27 %	28 %	29 %	30 %
H2S	1.18069E-07	8.04713E-12	0	8.06767E-12	0
CO2	4.24132E-06	1.08362E-11	0	1.0881E-11	0
N2	0.00264713	2.95091E-12	0	2.94676E-12	0
Methane	0.31913	8.66551E-09	8.6754E-09	8.67835E-09	0
Ethane	0.231332	1.0278E-07	1.03096E-07	1.03131E-07	0
Propane	0.248412	4.84634E-07	4.86321E-07	4.86486E-07	0
i-Butane	0.0500216	2.06842E-07	2.07586E-07	2.07657E-07	0
n-Butane	0.160634	1.42105E-06	1.42588E-06	1.42637E-06	0
i-Pentane	0.0551886	1.32934E-06	1.33352E-06	1.33397E-06	0
n-Pentane	0.069335	2.20856E-06	2.21518E-06	2.21593E-06	0
n-Hexane	0.0856121	1.86132E-05	1.86507E-05	1.86571E-05	0
n-Heptane	0.0781884	1.9738E-05	1.97778E-05	1.97845E-05	0
n-Octane	0.0183913	9.87319E-06	9.8893E-06	9.89266E-06	0
n-Nonane	0	0	0	0	0
n-Decane	0	0	0	0	0
Undecane	0	0	0	0	0
Benzene	0.126976	0.000673543	0.000674149	0.000674378	0
Toluene	0.119719	0.00165881	0.00166017	0.00166073	0
Ethylbenzene	0.0726998	0.00232641	0.00232849	0.00232928	0
m-Xylene	0.0502356	0.00166101	0.00166251	0.00166307	0
Water	5.9915	1.01052	1.01026	1.01057	0.1
MDEA	0.00741433	0.00784953	0.0075575	0.00756007	0
Piperazine	0.0150863	0.0137783	0.0127724	0.0127768	0
Phosphoric Acid	0	0	0	0	0
TEG	92.2975	98.9615	98.963	98.9627	99.9

Copyright © 2002-2022 BRE Group, Ltd.
Licensed to Trinity Consultants, Inc. and Affiliates

Process Streams Report
All Streams
Tabulated by Total Phase

Client Name:	Targa Resources	Job:	
Location:	Roadrunner Gas Processing Plant		
Flowsheet:	RR1 TEG		

Mass Fraction	26 %	27 %	28 %	29 %	30 %
O2	0	0	0	0	0

Mass Flow	26 lb/h	27 lb/h	28 lb/h	29 lb/h	30 lb/h
H2S	2.85643E-05	1.81572E-09	0	1.8203E-09	0
CO2	0.0010261	2.44504E-09	0	2.45507E-09	0
N2	0.640419	6.65829E-10	0	6.64877E-10	0
Methane	77.207	1.95524E-06	1.95809E-06	1.95809E-06	0
Ethane	55.9661	2.31908E-05	2.32693E-05	2.32693E-05	0
Propane	60.0983	0.00010935	0.000109766	0.000109766	0
i-Butane	12.1017	4.66708E-05	4.68535E-05	4.68535E-05	0
n-Butane	38.8621	0.000320639	0.000321831	0.000321831	0
i-Pentane	13.3518	0.000299946	0.000300983	0.000300983	0
n-Pentane	16.7742	0.000498328	0.00049998	0.00049998	0
n-Hexane	20.7121	0.00419979	0.00420958	0.00420958	0
n-Heptane	18.9161	0.00445359	0.00446398	0.00446398	0
n-Octane	4.44939	0.00222774	0.00223207	0.00223207	0
n-Nonane	0	0	0	0	0
n-Decane	0	0	0	0	0
Undecane	0	0	0	0	0
Benzene	30.7193	0.151975	0.152159	0.152159	0
Toluene	28.9635	0.374287	0.37471	0.37471	0
Ethylbenzene	17.5882	0.524921	0.525554	0.525554	0
m-Xylene	12.1535	0.374782	0.375238	0.375238	0
Water	1449.52	228.009	228.022	228.015	0.00766605
MDEA	1.79375	1.77113	1.70577	1.70577	0
Piperazine	3.64982	3.10888	2.88282	2.88282	0
Phosphoric Acid	0	0	0	0	0
TEG	22329.5	22329.2	22336.6	22328.9	7.65839
O2	0	0	0	0	0

Stream Properties

Property	Units	26	27	28	29	30
Temperature	°F	147.106	218.306	126.413	217.606	120 *
Pressure	psia	79.6959 *	11.6959	1004.7 *	64.6959	139.696 *
Mole Fraction Vapor	%	3.26649	0	0	0	0
Mole Fraction Light Liquid	%	96.7335	100	100	100	100
Mole Fraction Heavy Liquid	%	0	0	0	0	0
Molecular Weight	lb/lbmol	100.796	139.789	139.792	139.789	149.079
Mass Density	lb/ft^3	24.6231	65.0377	68.4548	65.069	68.731
Molar Flow	lbmol/h	240.02	161.412	161.458	161.407	0.0514226
Mass Flow	lb/h	24193	22563.5	22570.6	22562.9	7.66605
Vapor Volumetric Flow	ft^3/h	982.53	346.93	329.716	346.754	0.111537
Liquid Volumetric Flow	gpm	122.497	43.2536	41.1074	43.2317	0.0139059
Std Vapor Volumetric Flow	MMSCFD	2.18601	1.47008	1.4705	1.47003	0.000468338
Std Liquid Volumetric Flow	sgpm	44.1014	39.9877	40	39.9864	0.0135686
Specific Gravity			1.04279	1.09758	1.0433	1.10201
API Gravity			-6.66755	-6.80925	-6.67562	-7.10018
Net Ideal Gas Heating Value	Btu/ft^3	2428.61	3480.77	3480.85	3480.77	3745.75
Net Liquid Heating Value	Btu/lb	8838	9181.52	9181.49	9181.46	9274.43
Gross Ideal Gas Heating Value	Btu/ft^3	2670.81	3808.91	3809	3808.91	4095.08
Gross Liquid Heating Value	Btu/lb	9749.86	10072.3	10072.3	10072.3	10163.6

Remarks

ProMax 6.0.22251.0
Copyright © 2002-2022 BRE Group, Ltd.
Licensed to Trinity Consultants, Inc. and Affiliates

Process Streams Report
All Streams
Tabulated by Total Phase

Client Name:	Targa Resources	Job:	
Location:	Roadrunner Gas Processing Plant		
Flowsheet:	RR1 TEG		

Connections

	31	32	33	34	
From Block	MKUP-1	P-3618/3619	MKUP-1	AC-3300	
To Block	--	RCYL-1	AC-3300	P-3600/3601	

Stream Composition

Mole Fraction	31 %	32 %	33 %	34 %	
H2S	3.30911E-11	3.30067E-11	0	0	
CO2	3.45617E-11	3.44194E-11	0	0	
N2	1.47046E-11	1.47252E-11	0	0	
Methane	7.56205E-08	7.55083E-08	7.55964E-08	7.55964E-08	
Ethane	4.79448E-07	4.77816E-07	4.79295E-07	4.79295E-07	
Propane	1.54223E-06	1.53635E-06	1.54174E-06	1.54174E-06	
i-Butane	4.99433E-07	4.97471E-07	4.99274E-07	4.99274E-07	
n-Butane	3.43054E-06	3.41774E-06	3.42945E-06	3.42945E-06	
i-Pentane	2.58458E-06	2.5756E-06	2.58376E-06	2.58376E-06	
n-Pentane	4.2934E-06	4.27909E-06	4.29203E-06	4.29203E-06	
n-Hexane	3.02645E-05	3.01932E-05	3.02548E-05	3.02548E-05	
n-Heptane	2.76009E-05	2.75359E-05	2.75921E-05	2.75921E-05	
n-Octane	1.21063E-05	1.20824E-05	1.21025E-05	1.21025E-05	
n-Nonane	0	0	0	0	
n-Decane	0	0	0	0	
Undecane	0	0	0	0	
Benzene	0.00120687	0.00120537	0.00120648	0.00120648	
Toluene	0.0025196	0.00251668	0.0025188	0.0025188	
Ethylbenzene	0.003067	0.00306321	0.00306602	0.00306602	
m-Xylene	0.00218979	0.00218707	0.00218909	0.00218909	
Water	7.8415	7.84107	7.83927	7.83927	
MDEA	0.00886871	0.00920824	0.00886588	0.00886588	
Piperazine	0.0207354	0.0223607	0.0207288	0.0207288	
Phosphoric Acid	0	0	0	0	
TEG	92.1198	92.1183	92.1221	92.1221	
O2	0	0	0	0	

Mass Fraction	31 %	32 %	33 %	34 %	
H2S	8.06767E-12	8.04713E-12	0	0	
CO2	1.0881E-11	1.08362E-11	0	0	
N2	2.94676E-12	2.95091E-12	0	0	
Methane	8.67835E-09	8.66551E-09	8.6754E-09	8.6754E-09	
Ethane	1.03131E-07	1.0278E-07	1.03096E-07	1.03096E-07	
Propane	4.86486E-07	4.84634E-07	4.86321E-07	4.86321E-07	
i-Butane	2.07657E-07	2.06842E-07	2.07586E-07	2.07586E-07	
n-Butane	1.42637E-06	1.42105E-06	1.42588E-06	1.42588E-06	
i-Pentane	1.33397E-06	1.32934E-06	1.33352E-06	1.33352E-06	
n-Pentane	2.21593E-06	2.20856E-06	2.21518E-06	2.21518E-06	
n-Hexane	1.86571E-05	1.86132E-05	1.86507E-05	1.86507E-05	
n-Heptane	1.97845E-05	1.9738E-05	1.97778E-05	1.97778E-05	
n-Octane	9.89266E-06	9.87319E-06	9.8893E-06	9.8893E-06	
n-Nonane	0	0	0	0	
n-Decane	0	0	0	0	
Undecane	0	0	0	0	
Benzene	0.000674378	0.000673543	0.000674149	0.000674149	
Toluene	0.00166073	0.00165881	0.00166017	0.00166017	
Ethylbenzene	0.00232928	0.00232641	0.00232849	0.00232849	
m-Xylene	0.00166307	0.00166101	0.00166251	0.00166251	
Water	1.01057	1.01052	1.01026	1.01026	
MDEA	0.00756007	0.00784953	0.0075575	0.0075575	
Piperazine	0.0127768	0.0137783	0.0127724	0.0127724	
Phosphoric Acid	0	0	0	0	
TEG	98.9627	98.9615	98.963	98.963	

Copyright © 2002-2022 BRE Group, Ltd.
Licensed to Trinity Consultants, Inc. and Affiliates

Process Streams Report
All Streams
Tabulated by Total Phase

Client Name:	Targa Resources	Job:	
Location:	Roadrunner Gas Processing Plant		
Flowsheet:	RR1 TEG		

Mass Fraction	31 %	32 %	33 %	34 %
O2	0	0	0	0

Mass Flow	31 lb/h	32 lb/h	33 lb/h	34 lb/h
H2S	0	1.81572E-09	0	0
CO2	0	2.44504E-09	0	0
N2	0	6.65829E-10	0	0
Methane	0	1.95524E-06	1.95809E-06	1.95809E-06
Ethane	0	2.31908E-05	2.32693E-05	2.32693E-05
Propane	0	0.00010935	0.000109766	0.000109766
i-Butane	0	4.66708E-05	4.68535E-05	4.68535E-05
n-Butane	0	0.000320639	0.000321831	0.000321831
i-Pentane	0	0.000299946	0.000300983	0.000300983
n-Pentane	0	0.000498328	0.00049998	0.00049998
n-Hexane	0	0.00419979	0.00420958	0.00420958
n-Heptane	0	0.00445359	0.00446398	0.00446398
n-Octane	0	0.00222774	0.00223207	0.00223207
n-Nonane	0	0	0	0
n-Decane	0	0	0	0
Undecane	0	0	0	0
Benzene	0	0.151975	0.152159	0.152159
Toluene	0	0.374287	0.37471	0.37471
Ethylbenzene	0	0.524921	0.525554	0.525554
m-Xylene	0	0.374782	0.375238	0.375238
Water	0	228.009	228.022	228.022
MDEA	0	1.77113	1.70577	1.70577
Piperazine	0	3.10888	2.88282	2.88282
Phosphoric Acid	0	0	0	0
TEG	0	22329.2	22336.6	22336.6
O2	0	0	0	0

Stream Properties

Property	Units	31	32	33	34
Temperature	°F		218.409	217.575	125 *
Pressure	psia	64.6959	64.6959 *	64.6959	59.6959
Mole Fraction Vapor	%		0	0	0
Mole Fraction Light Liquid	%		100	100	100
Mole Fraction Heavy Liquid	%		0	0	0
Molecular Weight	lb/lbmol	139.789	139.789	139.792	139.792
Mass Density	lb/ft^3		65.0391	65.0702	68.4228
Molar Flow	lbmol/h	0	161.412	161.458	161.458
Mass Flow	lb/h	0	22563.5	22570.6	22570.6
Vapor Volumetric Flow	ft^3/h	0	346.922	346.866	329.87
Liquid Volumetric Flow	gpm	0	43.2526	43.2456	41.1266
Std Vapor Volumetric Flow	MMSCFD	0	1.47008	1.4705	1.4705
Std Liquid Volumetric Flow	sgpm	0	39.9877	40 *	40
Specific Gravity			1.04282	1.04331	1.09707
API Gravity			-6.67511	-6.67574	-6.67503
Net Ideal Gas Heating Value	Btu/ft^3	3480.77	3480.77	3480.85	3480.85
Net Liquid Heating Value	Btu/lb	9181.46	9181.52	9181.49	9181.49
Gross Ideal Gas Heating Value	Btu/ft^3	3808.91	3808.91	3809	3809
Gross Liquid Heating Value	Btu/lb	10072.3	10072.3	10072.3	10072.3

Remarks

ProMax 6.0.22251.0
Copyright © 2002-2022 BRE Group, Ltd.
Licensed to Trinity Consultants, Inc. and Affiliates

RR2 TEG
Plant Schematic

Client Name:	Targa Resources	Job:
Location:	Roadrunner Gas Processing Plant	
Flowsheet:	RR2 TEG	

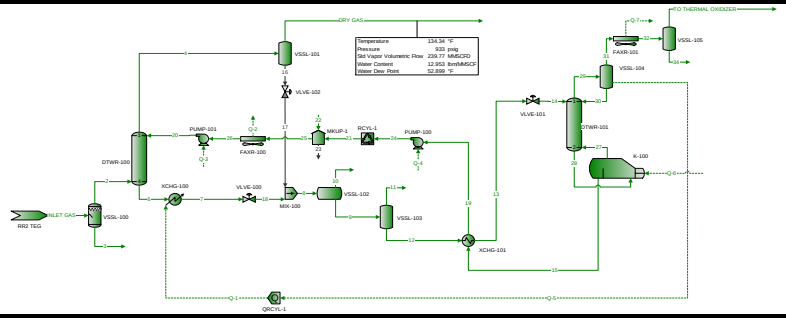

ProMax 6.0.22251.0
Copyright © 2002-2022 BRE Group, Ltd.
Licensed to Trinity Consultants, Inc. and Affiliates

Process Streams Report
All Streams
Tabulated by Total Phase

Client Name:	Targa Resources	Job:	
Location:	Roadrunner Gas Processing Plant		
Flowsheet:	RR2 TEG		

Connections

	DRY GAS	INLET GAS	TO THERMAL OXIDIZER	2	3
From Block	VSSL-101	RR2 TEG	VSSL-105	VSSL-100	VSSL-100
To Block	--	VSSL-100	--	DTWR-100	--

Stream Composition

Mole Fraction	DRY GAS %	INLET GAS %	TO THERMAL OXIDIZER %	2 %	3 %
H2S	4.10527E-07	4.12706E-07	2.86747E-05	4.12707E-07	1.7972E-08
CO2	7.20045E-05	7.19315E-05	0.000643367	7.19317E-05	1.14516E-06
N2	1.22352	1.21992	0.0140908	1.21992	0.000826606
Methane	78.2842	78.0664	12.9498	78.0667	0.0922633
Ethane	11.4443	11.4168	15.2234	11.4168	0.0125706
Propane	5.42691	5.4157	17.7805	5.41572	0.00335008
i-Butane	0.738637	0.737198	3.21283	0.7372	0.000200378
n-Butane	1.64217	1.63975	12.6821	1.63976	0.000754671
i-Pentane	0.369997	0.369581	3.90172	0.369582	7.67812E-05
n-Pentane	0.388733	0.388439	4.988	0.38844	5.1771E-05
n-Hexane	0.254563	0.254704	4.65339	0.254705	1.66466E-05
n-Heptane	0.139558	0.139849	2.32145	0.13985	4.51779E-06
n-Octane	0.0211704	0.0212532	0.22608	0.0212533	2.82605E-07
n-Nonane	0	0	0	0	0
n-Decane	0	0	0	0	0
Undecane	0	0	0	0	0
Benzene	0.0209345	0.0223416	7.17668	0.0223416	0.000613307
Toluene	0.0106339	0.0117656	2.93498	0.0117657	0.000203761
Ethylbenzene	0.00429321	0.0048817	0.599936	0.00488172	4.73356E-05
m-Xylene	0.002876	0.00328228	0.417176	0.00328229	2.56977E-05
Water	0.0272777	0.287946	10.9171	0.287605	98.6479
MDEA	2.88165E-07	3.18497E-06	0.000194472	3.18496E-06	6.01954E-06
Piperazine	2.81546E-05	6.95844E-05	3.51136E-06	6.52866E-05	1.2411
Phosphoric Acid	0	0	0	0	0
TEG	0.000182794	0	1.80992E-08	0	0
O2	0	0	0	0	0

Mass Fraction	DRY GAS %	INLET GAS %	TO THERMAL OXIDIZER %	2 %	3 %
H2S	6.63424E-07	6.66991E-07	2.03159E-05	6.66993E-07	3.24721E-08
CO2	0.000150261	0.000150119	0.000588614	0.000150119	2.67186E-06
N2	1.62523	1.62056	0.00820589	1.62057	0.00122763
Methane	59.5503	59.3887	4.31875	59.3889	0.0784698
Ethane	16.3172	16.2792	9.51605	16.2793	0.0200392
Propane	11.3471	11.3245	16.2991	11.3245	0.00783164
i-Butane	2.03569	2.03186	3.88199	2.03187	0.000617441
n-Butane	4.52584	4.51948	15.3235	4.51949	0.00232542
i-Pentane	1.2658	1.26447	5.85208	1.26447	0.000293688
n-Pentane	1.3299	1.32899	7.48137	1.32899	0.000198024
n-Hexane	1.0402	1.04085	8.3364	1.04085	7.60521E-05
n-Heptane	0.663086	0.664514	4.83571	0.664516	2.39996E-05
n-Octane	0.114668	0.115125	0.536861	0.115125	1.71142E-06
n-Nonane	0	0	0	0	0
n-Decane	0	0	0	0	0
Undecane	0	0	0	0	0
Benzene	0.0775386	0.0827559	11.6537	0.0827562	0.00253979
Toluene	0.0464592	0.0514072	5.62175	0.0514074	0.000995325
Ethylbenzene	0.0216124	0.0245766	1.32407	0.0245767	0.000266423
m-Xylene	0.014478	0.0165244	0.920716	0.0165244	0.000144637
Water	0.0233017	0.245992	4.08859	0.245701	94.2174
MDEA	1.62824E-06	1.79975E-05	0.00048175	1.79975E-05	3.8028E-05

Copyright © 2002-2022 BRE Group, Ltd.
Licensed to Trinity Consultants, Inc. and Affiliates

Process Streams Report
All Streams
Tabulated by Total Phase

Client Name:	Targa Resources	Job:
Location:	Roadrunner Gas Processing Plant	
Flowsheet:	RR2 TEG	

Mass Fraction	DRY GAS %	INLET GAS %	TO THERMAL OXIDIZER %	2 %	3 %
Piperazine	0.000114993	0.000284226	6.28758E-06	0.000266671	5.66752
Phosphoric Acid	0	0	0	0	0
TEG	0.00130164	0	5.65035E-08	0	0
O2	0	0	0	0	0

Mass Flow	DRY GAS lb/h	INLET GAS lb/h	TO THERMAL OXIDIZER lb/h	2 lb/h	3 lb/h
H2S	0.00368339	0.00371414	2.1785E-05	0.00371414	5.60111E-10
CO2	0.834261	0.835935	0.00063118	0.835935	4.60869E-08
N2	9023.45	9024.1	0.0087993	9024.1	2.11753E-05
Methane	330629	330706	4.63107	330706	0.00135352
Ethane	90594.7	90650.7	10.2042	90650.7	0.000345655
Propane	63000.4	63060.5	17.4778	63060.5	0.000135088
i-Butane	11302.3	11314.4	4.16272	11314.4	1.06502E-05
n-Butane	25127.9	25166.7	16.4316	25166.7	4.01112E-05
i-Pentane	7027.86	7041.18	6.27527	7041.18	5.06582E-06
n-Pentane	7383.73	7400.46	8.02238	7400.46	3.41571E-06
n-Hexane	5775.3	5795.97	8.93924	5795.97	1.31182E-06
n-Heptane	3681.52	3700.35	5.18541	3700.35	4.13969E-07
n-Octane	636.647	641.071	0.575684	641.071	2.95202E-08
n-Nonane	0	0	0	0	0
n-Decane	0	0	0	0	0
Undecane	0	0	0	0	0
Benzene	430.502	460.826	12.4965	460.826	4.38088E-05
Toluene	257.946	286.261	6.02828	286.261	1.71683E-05
Ethylbenzene	119.994	136.855	1.41982	136.855	4.59552E-06
m-Xylene	80.3832	92.016	0.987298	92.016	2.49483E-06
Water	129.373	1369.81	4.38426	1368.18	1.62515
MDEA	0.00904013	0.100219	0.000516587	0.100219	6.55945E-07
Piperazine	0.638451	1.58271	6.74227E-06	1.48495	0.097759
Phosphoric Acid	0	0	0	0	0
TEG	7.22685	0	6.05896E-08	0	0
O2	0	0	0	0	0

Stream Properties

Property	Units	DRY GAS	INLET GAS	TO THERMAL OXIDIZER	2	3
Temperature	°F	134.344	131.094	120	130.983	130.983
Pressure	psia	947.696	953.696	15.4959	951.696	951.696
Mole Fraction Vapor	%	100	100	100	100	0
Mole Fraction Light Liquid	%	0	0	0	0	100
Mole Fraction Heavy Liquid	%	0	0	0	0	0
Molecular Weight	lb/lbmol	21.0893	21.0878	48.1033	21.0878	18.8624
Mass Density	lb/ft^3	3.67988	3.74178	0.121805	3.73401	61.6923
Molar Flow	lbmol/h	26326.7	26406.3	2.22919	26406.2	0.0914462
Mass Flow	lb/h	555210	556850	107.231	556848	1.7249
Vapor Volumetric Flow	ft^3/h	150877	148820	880.357	149129	0.0279597
Liquid Volumetric Flow	gpm	18810.6	18554.1	109.759	18592.7	0.00348588
Std Vapor Volumetric Flow	MMSCFD	239.773	240.498	0.0203026	240.497	0.000832857
Std Liquid Volumetric Flow	sgpm	3187.37	3191.51	0.373509	3191.5	0.00353192
Specific Gravity		0.728157	0.728107	1.66088	0.728107	0.989155
API Gravity						9.51331
Net Ideal Gas Heating Value	Btu/ft^3	1143.66	1141	2353.17	1141	40.6773
Net Liquid Heating Value	Btu/lb	20518	20469.3	18369.8	20469.4	-194.343
Gross Ideal Gas Heating Value	Btu/ft^3	1260.49	1257.67	2543.23	1257.68	93.5488
Gross Liquid Heating Value	Btu/lb	22620.7	22569.3	19869.5	22569.4	869.354

Warnings

ProMax 6.0.22251.0
Copyright © 2002-2022 BRE Group, Ltd.
Licensed to Trinity Consultants, Inc. and Affiliates

Process Streams Report
All Streams
Tabulated by Total Phase

Client Name:	Targa Resources	Job:
Location:	Roadrunner Gas Processing Plant	
Flowsheet:	RR2 TEG	

ProMax:ProMax!Project!Flowsheets!RR2 TEG!PStreams!DRY GAS!Analyses!Freeze 1!Properties!Water Dew Point
Warning: Water dew point temperature is thermodynamically unstable as other phases will form instead of a free aqueous liquid phase.

Remarks

ProMax 6.0.22251.0
Copyright © 2002-2022 BRE Group, Ltd.
Licensed to Trinity Consultants, Inc. and Affiliates

Process Streams Report
All Streams
Tabulated by Total Phase

Client Name:	Targa Resources	Job:
Location:	Roadrunner Gas Processing Plant	
Flowsheet:	RR2 TEG	

Connections

	4	6	7	8	9
From Block	DTWR-100	DTWR-100	XCHG-100	MIX-100	VSSL-102
To Block	VSSL-101	XCHG-100	VLVE-100	VSSL-102	VSSL-103

Stream Composition

Mole Fraction	4 %	6 %	7 %	8 %	9 %
H2S	4.10527E-07	3.74418E-07	3.74418E-07	3.74418E-07	2.88053E-07
CO2	7.20045E-05	1.57845E-05	1.57845E-05	1.57845E-05	6.31506E-06
N2	1.22352	0.009524	0.009524	0.009524	0.00018488
Methane	78.2842	2.00072	2.00072	2.00072	0.13656
Ethane	11.4443	0.772327	0.772327	0.772327	0.151384
Propane	5.42691	0.565094	0.565094	0.565094	0.177138
i-Butane	0.738637	0.0863037	0.0863037	0.0863037	0.0326813
n-Butane	1.64217	0.277062	0.277062	0.277062	0.131905
i-Pentane	0.369997	0.0766618	0.0766618	0.0766618	0.0449338
n-Pentane	0.388733	0.0962419	0.0962419	0.0962419	0.0602388
n-Hexane	0.254563	0.0995636	0.0995636	0.0995636	0.0772981
n-Heptane	0.139558	0.0780053	0.0780053	0.0780053	0.0671542
n-Octane	0.0211704	0.0160832	0.0160832	0.0160832	0.0148125
n-Nonane	0	0	0	0	0
n-Decane	0	0	0	0	0
Undecane	0	0	0	0	0
Benzene	0.0209345	0.162019	0.162019	0.162019	0.163677
Toluene	0.0106339	0.129427	0.129427	0.129427	0.132094
Ethylbenzene	0.00429321	0.0682075	0.0682075	0.0682075	0.0699568
m-Xylene	0.002876	0.0471155	0.0471155	0.0471155	0.0483338
Water	0.0272777	33.7873	33.7873	33.7873	34.8836
MDEA	2.88165E-07	0.00622129	0.00622129	0.00622129	0.00643086
Piperazine	2.81546E-05	0.0164723	0.0164723	0.0164723	0.0170225
Phosphoric Acid	0	0	0	0	0
TEG	0.000182794	61.7056	61.7056	61.7056	63.7846
O2	0	0	0	0	0

Mass Fraction	4 %	6 %	7 %	8 %	9 %
H2S	6.63424E-07	1.27014E-07	1.27014E-07	1.27014E-07	9.53699E-08
CO2	0.000150261	6.91451E-06	6.91451E-06	6.91451E-06	2.69993E-06
N2	1.62523	0.00265564	0.00265564	0.00265564	5.03135E-05
Methane	59.5503	0.319479	0.319479	0.319479	0.0212825
Ethane	16.3172	0.231156	0.231156	0.231156	0.044221
Propane	11.3471	0.248028	0.248028	0.248028	0.0758816
i-Butane	2.03569	0.0499294	0.0499294	0.0499294	0.0184531
n-Butane	4.52584	0.160289	0.160289	0.160289	0.0744789
i-Pentane	1.2658	0.0550544	0.0550544	0.0550544	0.0314942
n-Pentane	1.3299	0.0691158	0.0691158	0.0691158	0.0422215
n-Hexane	1.0402	0.085402	0.085402	0.085402	0.0647114
n-Heptane	0.663086	0.0778009	0.0778009	0.0778009	0.06537
n-Octane	0.114668	0.0182865	0.0182865	0.0182865	0.0164374
n-Nonane	0	0	0	0	0
n-Decane	0	0	0	0	0
Undecane	0	0	0	0	0
Benzene	0.0775386	0.12597	0.12597	0.12597	0.124203
Toluene	0.0464592	0.1187	0.1187	0.1187	0.118237
Ethylbenzene	0.0216124	0.0720772	0.0720772	0.0720772	0.0721505
m-Xylene	0.014478	0.0497886	0.0497886	0.0497886	0.0498495
Water	0.0233017	6.0587	6.0587	6.0587	6.10508
MDEA	1.62824E-06	0.0073791	0.0073791	0.0073791	0.00744451
Piperazine	0.000114993	0.0141228	0.0141228	0.0141228	0.0142441
Phosphoric Acid	0	0	0	0	0
TEG	0.00130164	92.2361	92.2361	92.2361	93.0542

Copyright © 2002-2022 BRE Group, Ltd.
Licensed to Trinity Consultants, Inc. and Affiliates

Process Streams Report
All Streams
Tabulated by Total Phase

Client Name:	Targa Resources	Job:
Location:	Roadrunner Gas Processing Plant	
Flowsheet:	RR2 TEG	

Mass Fraction	4 %	6 %	7 %	8 %	9 %
O2	0	0	0	0	0

Mass Flow	4 lb/h	6 lb/h	7 lb/h	8 lb/h	9 lb/h
H2S	0.00368339	3.07492E-05	3.07492E-05	3.07492E-05	2.28854E-05
CO2	0.834261	0.00167395	0.00167395	0.00167395	0.000647886
N2	9023.45	0.642911	0.642911	0.642911	0.0120734
Methane	330629	77.3435	77.3435	77.3435	5.10702
Ethane	90594.7	55.9612	55.9612	55.9612	10.6114
Propane	63000.4	60.0457	60.0457	60.0457	18.2089
i-Butane	11302.3	12.0875	12.0875	12.0875	4.42808
n-Butane	25127.9	38.8047	38.8047	38.8047	17.8723
i-Pentane	7027.86	13.3283	13.3283	13.3283	7.55747
n-Pentane	7383.73	16.7324	16.7324	16.7324	10.1316
n-Hexane	5775.3	20.6752	20.6752	20.6752	15.5284
n-Heptane	3681.52	18.835	18.835	18.835	15.6864
n-Octane	636.647	4.42703	4.42703	4.42703	3.94438
n-Nonane	0	0	0	0	0
n-Decane	0	0	0	0	0
Undecane	0	0	0	0	0
Benzene	430.502	30.4965	30.4965	30.4965	29.8043
Toluene	257.946	28.7364	28.7364	28.7364	28.3726
Ethylbenzene	119.994	17.4494	17.4494	17.4494	17.3135
m-Xylene	80.3832	12.0534	12.0534	12.0534	11.9621
Water	129.373	1466.77	1466.77	1466.77	1465
MDEA	0.00904013	1.78643	1.78643	1.78643	1.78642
Piperazine	0.638451	3.41903	3.41903	3.41903	3.41806
Phosphoric Acid	0	0	0	0	0
TEG	7.22685	22329.7	22329.7	22329.7	22329.7
O2	0	0	0	0	0

Stream Properties

Property	Units	4	6	7	8	9
Temperature	°F	134.458	133.99	144.678	147.819	147.819
Pressure	psia	949.696	951.696	948.696	79.6959	79.6959
Mole Fraction Vapor	%	100	0	0.00648107	3.25936	0
Mole Fraction Light Liquid	%	0	100	99.9935	96.7406	100
Mole Fraction Heavy Liquid	%	0	0	0	0	0
Molecular Weight	lb/lbmol	21.0893	100.465	100.465	100.465	102.937
Mass Density	lb/ft^3	3.68753	66.6805	66.329	24.5836	67.2044
Molar Flow	lbmol/h	26326.7	240.972	240.972	240.972	233.118
Mass Flow	lb/h	555210	24209.3	24209.3	24209.3	23996.4
Vapor Volumetric Flow	ft^3/h	150564	363.064	364.987	984.773	357.066
Liquid Volumetric Flow	gpm	18771.6	45.2651	45.5049	122.777	44.5173
Std Vapor Volumetric Flow	MMSCFD	239.773	2.19468	2.19468	2.19468	2.12315
Std Liquid Volumetric Flow	sgpm	3187.37	44.1338	44.1338	44.1338	43.0606
Specific Gravity		0.728157	1.06913			1.07753
API Gravity			-3.34561			-5.06141
Net Ideal Gas Heating Value	Btu/ft^3	1143.66	2418.83	2418.83	2418.83	2451.62
Net Liquid Heating Value	Btu/lb	20518	8830.58	8830.58	8830.58	8730.33
Gross Ideal Gas Heating Value	Btu/ft^3	1260.49	2660.27	2660.27	2660.27	2696.51
Gross Liquid Heating Value	Btu/lb	22620.7	9742.55	9742.55	9742.55	9633.15

Remarks

ProMax 6.0.22251.0
Copyright © 2002-2022 BRE Group, Ltd.
Licensed to Trinity Consultants, Inc. and Affiliates

Process Streams Report
All Streams
Tabulated by Total Phase

Client Name:	Targa Resources	Job:
Location:	Roadrunner Gas Processing Plant	
Flowsheet:	RR2 TEG	

Connections

	10	11	12	13	14
From Block	VSSL-102	VSSL-103	VSSL-103	XCHG-101	VLVE-101
To Block	--	--	XCHG-101	VLVE-101	DTWR-101

Stream Composition

Mole Fraction	10 %	11 %	12 %	13 %	14 %
H2S	2.93782E-06	3.1218E-06	2.87417E-07	2.87417E-07	2.87417E-07
CO2	0.000296846	0.000312871	6.2463E-06	6.2463E-06	6.2463E-06
N2	0.286717	0.223169	0.000134868	0.000134868	0.000134868
Methane	57.3307	55.5611	0.124129	0.124129	0.124129
Ethane	19.2025	19.8498	0.146966	0.146966	0.146966
Propane	12.08	12.6464	0.174342	0.174342	0.174342
i-Butane	1.67787	1.76192	0.0322934	0.0322934	0.0322934
n-Butane	4.58543	4.83331	0.130851	0.130851	0.130851
i-Pentane	1.01838	1.07521	0.0447027	0.0447027	0.0447027
n-Pentane	1.16485	1.23091	0.0599762	0.0599762	0.0599762
n-Hexane	0.760422	0.804491	0.077135	0.077135	0.077135
n-Heptane	0.400074	0.423223	0.0670744	0.0670744	0.0670744
n-Octane	0.0537973	0.0568801	0.0148031	0.0148031	0.0148031
n-Nonane	0	0	0	0	0
n-Decane	0	0	0	0	0
Undecane	0	0	0	0	0
Benzene	0.112832	0.119734	0.163687	0.163687	0.163687
Toluene	0.050278	0.0533053	0.132112	0.132112	0.132112
Ethylbenzene	0.0162871	0.017245	0.0699686	0.0699686	0.0699686
m-Xylene	0.0109571	0.0116014	0.048342	0.048342	0.048342
Water	1.24814	1.33082	34.8912	34.8912	34.8912
MDEA	1.03531E-06	1.09638E-06	0.0064323	0.0064323	0.0064323
Piperazine	0.000143436	0.000152304	0.0170262	0.0170262	0.0170262
Phosphoric Acid	0	0	0	0	0
TEG	0.000404255	0.000427073	63.7989	63.7989	63.7989
O2	0	0	0	0	0

Mass Fraction	10 %	11 %	12 %	13 %	14 %
H2S	3.69451E-06	3.85283E-06	9.51438E-08	9.51438E-08	9.51438E-08
CO2	0.000482057	0.000498627	2.67009E-06	2.67009E-06	2.67009E-06
N2	0.296375	0.226393	3.6697E-05	3.6697E-05	3.6697E-05
Methane	33.9375	32.2779	0.0193419	0.0193419	0.0193419
Ethane	21.3058	21.6142	0.0429234	0.0429234	0.0429234
Propane	19.6554	20.1942	0.0746713	0.0746713	0.0746713
i-Butane	3.59849	3.70846	0.0182311	0.0182311	0.0182311
n-Butane	9.8343	10.173	0.0738714	0.0738714	0.0738714
i-Pentane	2.71119	2.80922	0.0313271	0.0313271	0.0313271
n-Pentane	3.10112	3.21603	0.0420306	0.0420306	0.0420306
n-Hexane	2.41802	2.51055	0.0645642	0.0645642	0.0645642
n-Heptane	1.47924	1.53571	0.0652815	0.0652815	0.0652815
n-Octane	0.226755	0.235288	0.0164242	0.0164242	0.0164242
n-Nonane	0	0	0	0	0
n-Decane	0	0	0	0	0
Undecane	0	0	0	0	0
Benzene	0.325214	0.338687	0.12419	0.12419	0.12419
Toluene	0.170939	0.177859	0.118233	0.118233	0.118233
Ethylbenzene	0.0638038	0.0662994	0.0721509	0.0721509	0.0721509
m-Xylene	0.0429238	0.0446023	0.0498498	0.0498498	0.0498498
Water	0.829709	0.868211	6.10539	6.10539	6.10539
MDEA	4.55229E-06	4.73113E-06	0.00744496	0.00744496	0.00744496
Piperazine	0.000455894	0.000475071	0.0142449	0.0142449	0.0142449
Phosphoric Acid	0	0	0	0	0
TEG	0.00224011	0.00232251	93.0598	93.0598	93.0598

Copyright © 2002-2022 BRE Group, Ltd.
Licensed to Trinity Consultants, Inc. and Affiliates

Process Streams Report
All Streams
Tabulated by Total Phase

Client Name:	Targa Resources	Job:
Location:	Roadrunner Gas Processing Plant	
Flowsheet:	RR2 TEG	

Mass Fraction	10 %	11 %	12 %	13 %	14 %
O2	0	0	0	0	0

Mass Flow	10 lb/h	11 lb/h	12 lb/h	13 lb/h	14 lb/h
H2S	7.86382E-06	5.56159E-08	2.28297E-05	2.28297E-05	2.28297E-05
CO2	0.00102607	7.19772E-06	0.000640688	0.000640688	0.000640688
N2	0.630838	0.00326801	0.00880543	0.00880543	0.00880543
Methane	72.2365	0.465934	4.64109	4.64109	4.64109
Ethane	45.3497	0.312003	10.2994	10.2994	10.2994
Propane	41.8368	0.291504	17.9174	17.9174	17.9174
i-Butane	7.65945	0.0535319	4.37455	4.37455	4.37455
n-Butane	20.9325	0.146849	17.7254	17.7254	17.7254
i-Pentane	5.7708	0.0405513	7.51692	7.51692	7.51692
n-Pentane	6.60078	0.0464236	10.0852	10.0852	10.0852
n-Hexane	5.14679	0.0362399	15.4922	15.4922	15.4922
n-Heptane	3.14858	0.0221681	15.6643	15.6643	15.6643
n-Octane	0.482651	0.00339639	3.94098	3.94098	3.94098
n-Nonane	0	0	0	0	0
n-Decane	0	0	0	0	0
Undecane	0	0	0	0	0
Benzene	0.692224	0.00488897	29.7994	29.7994	29.7994
Toluene	0.363845	0.0025674	28.37	28.37	28.37
Ethylbenzene	0.135807	0.000957037	17.3126	17.3126	17.3126
m-Xylene	0.0913639	0.000643838	11.9614	11.9614	11.9614
Water	1.76605	0.0125327	1464.99	1464.99	1464.99
MDEA	9.68961E-06	6.82942E-08	1.78642	1.78642	1.78642
Piperazine	0.000970377	6.85769E-06	3.41806	3.41806	3.41806
Phosphoric Acid	0	0	0	0	0
TEG	0.0047681	3.35257E-05	22329.7	22329.7	22329.7
O2	0	0	0	0	0

Stream Properties

Property	Units	10	11	12	13	14
Temperature	°F	147.819	147.836	147.836	315 *	289.633
Pressure	psia	79.6959	74.6959	74.6959	73.6959	15.6959 *
Mole Fraction Vapor	%	100	100	0	0.43702	11.1225
Mole Fraction Light Liquid	%	0	0	100	99.563	88.8775
Mole Fraction Heavy Liquid	%	0	0	0	0	0
Molecular Weight	lb/lbmol	27.1006	27.6144	102.954	102.954	102.954
Mass Density	lb/ft^3	0.339094	0.323659	67.2106	47.6902	1.76872
Molar Flow	lbmol/h	7.85413	0.0522737	233.065	233.065	233.065
Mass Flow	lb/h	212.851	1.44351	23995	23995	23995
Vapor Volumetric Flow	ft^3/h	627.707	4.45996	357.012	503.143	13566.3
Liquid Volumetric Flow	gpm	78.2596	0.556047	44.5105	62.7295	1691.38
Std Vapor Volumetric Flow	MMSCFD	0.0715324	0.000476089	2.12267	2.12267	2.12267
Std Liquid Volumetric Flow	sgpm	1.07317	0.00721222	43.0534	43.0534	43.0534
Specific Gravity		0.935712	0.953454	1.07763		
API Gravity				-5.07326		
Net Ideal Gas Heating Value	Btu/ft^3	1445.74	1471.53	2451.84	2451.84	2451.84
Net Liquid Heating Value	Btu/lb	20133	20107.6	8729.65	8729.65	8729.65
Gross Ideal Gas Heating Value	Btu/ft^3	1584.48	1612.14	2696.75	2696.75	2696.75
Gross Liquid Heating Value	Btu/lb	22076.3	22040.5	9632.4	9632.4	9632.4

Remarks

ProMax 6.0.22251.0
Copyright © 2002-2022 BRE Group, Ltd.
Licensed to Trinity Consultants, Inc. and Affiliates

Process Streams Report
All Streams
Tabulated by Total Phase

Client Name:	Targa Resources	Job:
Location:	Roadrunner Gas Processing Plant	
Flowsheet:	RR2 TEG	

Connections

	15	16	17	18	19
From Block	K-100	VSSL-101	VLVE-102	VLVE-100	XCHG-101
To Block	XCHG-101	VLVE-102	MIX-100	MIX-100	PUMP-100

Stream Composition

Mole Fraction	15 %	16 %	17 %	18 %	19 %
H2S	3.46782E-11			3.74418E-07	3.46782E-11
CO2	5.47733E-11			1.57845E-05	5.47733E-11
N2	1.44841E-11			0.009524	1.44841E-11
Methane	7.38791E-08			2.00072	7.38791E-08
Ethane	4.65496E-07			0.772327	4.65496E-07
Propane	1.4943E-06			0.565094	1.4943E-06
i-Butane	4.83331E-07			0.0863037	4.83331E-07
n-Butane	3.32412E-06			0.277062	3.32412E-06
i-Pentane	2.50395E-06			0.0766618	2.50395E-06
n-Pentane	4.15758E-06			0.0962419	4.15758E-06
n-Hexane	2.93564E-05			0.0995636	2.93564E-05
n-Heptane	2.67332E-05			0.0780053	2.67332E-05
n-Octane	1.173E-05			0.0160832	1.173E-05
n-Nonane	0			0	0
n-Decane	0			0	0
Undecane	0			0	0
Benzene	0.00117035			0.162019	0.00117035
Toluene	0.00244473			0.129427	0.00244473
Ethylbenzene	0.00297881			0.0682075	0.00297881
m-Xylene	0.0021265			0.0471155	0.0021265
Water	7.84194			33.7873	7.84194
MDEA	0.0091696			0.00622129	0.0091696
Piperazine	0.0209488			0.0164723	0.0209488
Phosphoric Acid	0			0	0
TEG	92.1191			61.7056	92.1191
O2	0			0	0

Mass Fraction	15 %	16 %	17 %	18 %	19 %
H2S	8.45466E-12			1.27014E-07	8.45466E-12
CO2	1.72442E-11			6.91451E-06	1.72442E-11
N2	2.90259E-12			0.00265564	2.90259E-12
Methane	8.47855E-09			0.319479	8.47855E-09
Ethane	1.0013E-07			0.231156	1.0013E-07
Propane	4.7137E-07			0.248028	4.7137E-07
i-Butane	2.00963E-07			0.0499294	2.00963E-07
n-Butane	1.38213E-06			0.160289	1.38213E-06
i-Pentane	1.29236E-06			0.0550544	1.29236E-06
n-Pentane	2.14584E-06			0.0691158	2.14584E-06
n-Hexane	1.80974E-05			0.085402	1.80974E-05
n-Heptane	1.91626E-05			0.0778009	1.91626E-05
n-Octane	9.58521E-06			0.0182865	9.58521E-06
n-Nonane	0			0	0
n-Decane	0			0	0
Undecane	0			0	0
Benzene	0.000653974			0.12597	0.000653974
Toluene	0.00161139			0.1187	0.00161139
Ethylbenzene	0.00226232			0.0720772	0.00226232
m-Xylene	0.00161501			0.0497886	0.00161501
Water	1.01063			6.0587	1.01063
MDEA	0.0078166			0.0073791	0.0078166
Piperazine	0.0129083			0.0141228	0.0129083
Phosphoric Acid	0			0	0
TEG	98.9624			92.2361	98.9624

Copyright © 2002-2022 BRE Group, Ltd.
Licensed to Trinity Consultants, Inc. and Affiliates

Process Streams Report
All Streams
Tabulated by Total Phase

Client Name:	Targa Resources	Job:
Location:	Roadrunner Gas Processing Plant	
Flowsheet:	RR2 TEG	

Mass Fraction	15 %	16 %	17 %	18 %	19 %
O2	0			0	0

Mass Flow	15 lb/h	16 lb/h	17 lb/h	18 lb/h	19 lb/h
H2S	1.90767E-09	0	0	3.07492E-05	1.90767E-09
CO2	3.8909E-09	0	0	0.00167395	3.8909E-09
N2	6.54925E-10	0	0	0.642911	6.54925E-10
Methane	1.91305E-06	0	0	77.3435	1.91305E-06
Ethane	2.25928E-05	0	0	55.9612	2.25928E-05
Propane	0.000106357	0	0	60.0457	0.000106357
i-Butane	4.53442E-05	0	0	12.0875	4.53442E-05
n-Butane	0.000311855	0	0	38.8047	0.000311855
i-Pentane	0.000291602	0	0	13.3283	0.000291602
n-Pentane	0.000484177	0	0	16.7324	0.000484177
n-Hexane	0.00408339	0	0	20.6752	0.00408339
n-Heptane	0.00432376	0	0	18.835	0.00432376
n-Octane	0.00216276	0	0	4.42703	0.00216276
n-Nonane	0	0	0	0	0
n-Decane	0	0	0	0	0
Undecane	0	0	0	0	0
Benzene	0.147559	0	0	30.4965	0.147559
Toluene	0.363586	0	0	28.7364	0.363586
Ethylbenzene	0.510457	0	0	17.4494	0.510457
m-Xylene	0.364402	0	0	12.0534	0.364402
Water	228.034	0	0	1466.77	228.034
MDEA	1.7637	0	0	1.78643	1.7637
Piperazine	2.91257	0	0	3.41903	2.91257
Phosphoric Acid	0	0	0	0	0
TEG	22329.4	0	0	22329.7	22329.4
O2	0	0	0	0	0

Stream Properties

Property	Units	15	16	17	18	19
Temperature	°F	400			147.819	218.794
Pressure	psia	16.6959	947.696	79.6959 *	79.6959 *	11.6959
Mole Fraction Vapor	%	0			3.25936	0
Mole Fraction Light Liquid	%	100			96.7406	100
Mole Fraction Heavy Liquid	%	0			0	0
Molecular Weight	lb/lbmol	139.788			100.465	139.788
Mass Density	lb/ft^3	58.0719			24.5836	65.02
Molar Flow	lbmol/h	161.412	0	0	240.972	161.412
Mass Flow	lb/h	22563.5	0	0	24209.3	22563.5
Vapor Volumetric Flow	ft^3/h	388.544	0	0	984.773	347.024
Liquid Volumetric Flow	gpm	48.4418	0	0	122.777	43.2653
Std Vapor Volumetric Flow	MMSCFD	1.47008	0	0	2.19468	1.47008
Std Liquid Volumetric Flow	sgpm	39.9874	0	0	44.1338	39.9874
Specific Gravity		0.931106				1.04251
API Gravity		-6.66876				-6.66804
Net Ideal Gas Heating Value	Btu/ft^3	3480.74			2418.83	3480.74
Net Liquid Heating Value	Btu/lb	9181.45			8830.58	9181.45
Gross Ideal Gas Heating Value	Btu/ft^3	3808.88			2660.27	3808.88
Gross Liquid Heating Value	Btu/lb	10072.3			9742.55	10072.3

Remarks

ProMax 6.0.22251.0
Copyright © 2002-2022 BRE Group, Ltd.
Licensed to Trinity Consultants, Inc. and Affiliates

Process Streams Report
All Streams
Tabulated by Total Phase

Client Name:	Targa Resources	Job:
Location:	Roadrunner Gas Processing Plant	
Flowsheet:	RR2 TEG	

Connections

	20	21	22	23	24
From Block	PUMP-101	RCYL-1	--	MKUP-1	PUMP-100
To Block	DTWR-100	MKUP-1	MKUP-1	--	RCYL-1

Stream Composition

Mole Fraction	20 %	21 %	22 %	23 %	24 %
H2S	0	4.00231E-11	0	4.00231E-11	3.46782E-11
CO2	0	1.36557E-11	0	1.36557E-11	5.47733E-11
N2	0	1.57699E-11	0	1.57699E-11	1.44841E-11
Methane	8.25728E-08	8.25983E-08	0	8.25983E-08	7.38791E-08
Ethane	5.31588E-07	5.31752E-07	0	5.31752E-07	4.65496E-07
Propane	1.72062E-06	1.72115E-06	0	1.72115E-06	1.4943E-06
i-Butane	5.60574E-07	5.60747E-07	0	5.60747E-07	4.83331E-07
n-Butane	3.83192E-06	3.8331E-06	0	3.8331E-06	3.32412E-06
i-Pentane	2.89018E-06	2.89107E-06	0	2.89107E-06	2.50395E-06
n-Pentane	4.81354E-06	4.81503E-06	0	4.81503E-06	4.15758E-06
n-Hexane	3.38866E-05	3.3897E-05	0	3.3897E-05	2.93564E-05
n-Heptane	3.10738E-05	3.10834E-05	0	3.10834E-05	2.67332E-05
n-Octane	1.36446E-05	1.36488E-05	0	1.36488E-05	1.173E-05
n-Nonane	0	0	0	0	0
n-Decane	0	0	0	0	0
Undecane	0	0	0	0	0
Benzene	0.00136217	0.00136259	0	0.00136259	0.00117035
Toluene	0.00283221	0.00283308	0	0.00283308	0.00244473
Ethylbenzene	0.00343395	0.00343501	0	0.00343501	0.00297881
m-Xylene	0.00245423	0.00245499	0	0.00245499	0.0021265
Water	7.83724	7.8394	0.827516	7.8394	7.84194
MDEA	0.00881134	0.00881406	0	0.00881406	0.0091696
Piperazine	0.018498	0.0185037	0	0.0185037	0.0209488
Phosphoric Acid	0	0	0	0	0
TEG	92.1253	92.1231	99.1725	92.1231	92.1191
O2	0	0	0	0	0

Mass Fraction	20 %	21 %	22 %	23 %	24 %
H2S	0	9.75747E-12	0	9.75747E-12	8.45466E-12
CO2	0	4.29908E-12	0	4.29908E-12	1.72442E-11
N2	0	3.16016E-12	0	3.16016E-12	2.90259E-12
Methane	9.47577E-09	9.47889E-09	0	9.47889E-09	8.47855E-09
Ethane	1.14341E-07	1.14378E-07	0	1.14378E-07	1.0013E-07
Propane	5.42734E-07	5.42912E-07	0	5.42912E-07	4.7137E-07
i-Butane	2.33068E-07	2.33144E-07	0	2.33144E-07	2.00963E-07
n-Butane	1.59318E-06	1.5937E-06	0	1.5937E-06	1.38213E-06
i-Pentane	1.49163E-06	1.49212E-06	0	1.49212E-06	1.29236E-06
n-Pentane	2.48428E-06	2.4851E-06	0	2.4851E-06	2.14584E-06
n-Hexane	2.0889E-05	2.08959E-05	0	2.08959E-05	1.80974E-05
n-Heptane	2.22729E-05	2.22802E-05	0	2.22802E-05	1.91626E-05
n-Octane	1.11491E-05	1.11528E-05	0	1.11528E-05	9.58521E-06
n-Nonane	0	0	0	0	0
n-Decane	0	0	0	0	0
Undecane	0	0	0	0	0
Benzene	0.000761122	0.000761372	0	0.000761372	0.000653974
Toluene	0.00186669	0.0018673	0	0.0018673	0.00161139
Ethylbenzene	0.00260784	0.0026087	0	0.0026087	0.00226232
m-Xylene	0.00186382	0.00186443	0	0.00186443	0.00161501
Water	1.00998	1.01027	0.1	1.01027	1.01063
MDEA	0.00751082	0.00751329	0	0.00751329	0.0078166
Piperazine	0.0113976	0.0114014	0	0.0114014	0.0129083
Phosphoric Acid	0	0	0	0	0
TEG	98.964	98.9636	99.9	98.9636	98.9624

Copyright © 2002-2022 BRE Group, Ltd.
Licensed to Trinity Consultants, Inc. and Affiliates

Process Streams Report
All Streams
Tabulated by Total Phase

Client Name:	Targa Resources	Job:	
Location:	Roadrunner Gas Processing Plant		
Flowsheet:	RR2 TEG		

Mass Fraction	20 %	21 %	22 %	23 %	24 %
O2	0	0	0	0	0

Mass Flow	20 lb/h	21 lb/h	22 lb/h	23 lb/h	24 lb/h
H2S	0	2.20161E-09	0	0	1.90767E-09
CO2	0	9.70014E-10	0	0	3.8909E-09
N2	0	7.13037E-10	0	0	6.54925E-10
Methane	2.13875E-06	2.13875E-06	0	0	1.91305E-06
Ethane	2.58076E-05	2.58076E-05	0	0	2.25928E-05
Propane	0.000122499	0.000122499	0	0	0.000106357
i-Butane	5.26051E-05	5.26051E-05	0	0	4.53442E-05
n-Butane	0.000359592	0.000359592	0	0	0.000311855
i-Pentane	0.000336672	0.000336672	0	0	0.000291602
n-Pentane	0.00056072	0.00056072	0	0	0.000484177
n-Hexane	0.0047148	0.0047148	0	0	0.00408339
n-Heptane	0.00502716	0.00502716	0	0	0.00432376
n-Octane	0.00251644	0.00251644	0	0	0.00216276
n-Nonane	0	0	0	0	0
n-Decane	0	0	0	0	0
Undecane	0	0	0	0	0
Benzene	0.171791	0.171791	0	0	0.147559
Toluene	0.421326	0.421326	0	0	0.363586
Ethylbenzene	0.58861	0.58861	0	0	0.510457
m-Xylene	0.420678	0.420678	0	0	0.364402
Water	227.959	227.952	0.00741789	0	228.034
MDEA	1.69525	1.69525	0	0	1.7637
Piperazine	2.57253	2.57253	0	0	2.91257
Phosphoric Acid	0	0	0	0	0
TEG	22336.9	22329.5	7.41048	0	22329.4
O2	0	0	0	0	0

Stream Properties

Property	Units	20	21	22	23	24
Temperature	°F	126.413	216.456	120 *		218.896
Pressure	psia	1004.7 *	64.6959	139.696 *	64.6959	64.6959 *
Mole Fraction Vapor	%	0	0	0		0
Mole Fraction Light Liquid	%	100	100	100		100
Mole Fraction Heavy Liquid	%	0	0	0		0
Molecular Weight	lb/lbmol	139.796	139.793	149.079	139.793	139.788
Mass Density	lb/ft^3	68.455	65.1116	68.731		65.0214
Molar Flow	lbmol/h	161.455	161.406	0.049758	0	161.412
Mass Flow	lb/h	22570.7	22563.3	7.41789	0	22563.5
Vapor Volumetric Flow	ft^3/h	329.717	346.533	0.107926	0	347.016
Liquid Volumetric Flow	gpm	41.1075	43.2041	0.0134558	0	43.2643
Std Vapor Volumetric Flow	MMSCFD	1.47047	1.47002	0.000453177	0	1.47008
Std Liquid Volumetric Flow	sgpm	40	39.9869	0.0131293	0	39.9874
Specific Gravity		1.09758	1.04398	1.10201		1.04253
API Gravity		-6.80966	-6.67604	-7.10018		-6.67561
Net Ideal Gas Heating Value	Btu/ft^3	3480.95	3480.87	3745.75	3480.87	3480.74
Net Liquid Heating Value	Btu/lb	9181.53	9181.5	9274.43	9181.5	9181.45
Gross Ideal Gas Heating Value	Btu/ft^3	3809.1	3809.01	4095.08	3809.01	3808.88
Gross Liquid Heating Value	Btu/lb	10072.3	10072.3	10163.6	10072.3	10072.3

Remarks

ProMax 6.0.22251.0
Copyright © 2002-2022 BRE Group, Ltd.
Licensed to Trinity Consultants, Inc. and Affiliates

Process Streams Report
All Streams
Tabulated by Total Phase

Client Name:	Targa Resources	Job:
Location:	Roadrunner Gas Processing Plant	
Flowsheet:	RR2 TEG	

Connections

	25	26	27	28	29
From Block	MKUP-1	FAXR-100	K-100	DTWR-101	DTWR-101
To Block	FAXR-100	PUMP-101	DTWR-101	K-100	VSSL-104

Stream Composition

Mole Fraction	25 %	26 %	27 %	28 %	29 %
H2S	0	0	4.91929E-09	1.23082E-09	8.69157E-07
CO2	0	0	2.2977E-08	5.66793E-09	1.88883E-05
N2	0	0	3.95353E-08	9.69229E-09	0.000407814
Methane	8.25728E-08	8.25728E-08	9.54287E-05	2.34242E-05	0.375342
Ethane	5.31588E-07	5.31588E-07	0.000302146	7.43405E-05	0.444399
Propane	1.72062E-06	1.72062E-06	0.000648657	0.000159971	0.527177
i-Butane	5.60574E-07	5.60574E-07	0.000166107	4.1041E-05	0.0976487
n-Butane	3.83192E-06	3.83192E-06	0.000952519	0.000235762	0.395666
i-Pentane	2.89018E-06	2.89018E-06	0.000523569	0.000130101	0.135168
n-Pentane	4.81354E-06	4.81354E-06	0.000799194	0.000198845	0.18135
n-Hexane	3.38866E-05	3.38866E-05	0.00259819	0.000658409	0.233183
n-Heptane	3.10738E-05	3.10738E-05	0.00261618	0.000660832	0.202766
n-Octane	1.36446E-05	1.36446E-05	0.00090462	0.00023038	0.0447376
n-Nonane	0	0	0	0	0
n-Decane	0	0	0	0	0
Undecane	0	0	0	0	0
Benzene	0.00136217	0.00136217	0.0394124	0.010535	0.492719
Toluene	0.00283221	0.00283221	0.0596753	0.0164593	0.394573
Ethylbenzene	0.00343395	0.00343395	0.0533675	0.0153179	0.205447
m-Xylene	0.00245423	0.00245423	0.0381324	0.0109436	0.141804
Water	7.83724	7.83724	92.5289	28.58	95.6722
MDEA	0.00881134	0.00881134	0.0027782	0.00760448	0.000294721
Piperazine	0.018498	0.018498	0.068109	0.0324973	0.0194549
Phosphoric Acid	0	0	0	0	0
TEG	92.1253	92.1253	7.20003	71.3243	0.435675
O2	0	0	0	0	0

Mass Fraction	25 %	26 %	27 %	28 %	29 %
H2S	0	0	6.04493E-09	3.73366E-10	1.45056E-06
CO2	0	0	3.646E-08	2.22025E-09	4.07068E-05
N2	0	0	3.99327E-08	2.4167E-09	0.000559442
Methane	9.47577E-09	9.47577E-09	5.51986E-05	3.34478E-06	0.294867
Ethane	1.14341E-07	1.14341E-07	0.000327577	1.98965E-05	0.654365
Propane	5.42734E-07	5.42734E-07	0.00103131	6.27866E-05	1.13836
i-Butane	2.33068E-07	2.33068E-07	0.000348103	2.1232E-05	0.27793
n-Butane	1.59318E-06	1.59318E-06	0.00199615	0.000121968	1.12615
i-Pentane	1.49163E-06	1.49163E-06	0.00136201	8.35493E-05	0.477564
n-Pentane	2.48428E-06	2.48428E-06	0.00207902	0.000127695	0.640727
n-Hexane	2.0889E-05	2.0889E-05	0.00807294	0.000505022	0.984025
n-Heptane	2.22729E-05	2.22729E-05	0.00945194	0.000589384	0.994943
n-Octane	1.11491E-05	1.11491E-05	0.00372579	0.000234234	0.25025
n-Nonane	0	0	0	0	0
n-Decane	0	0	0	0	0
Undecane	0	0	0	0	0
Benzene	0.000761122	0.000761122	0.111001	0.00732459	1.8847
Toluene	0.00186669	0.00186669	0.19825	0.0134984	1.78031
Ethylbenzene	0.00260784	0.00260784	0.204285	0.0144748	1.06809
m-Xylene	0.00186382	0.00186382	0.145967	0.0103412	0.73722
Water	1.00998	1.00998	60.103	4.58283	84.4022
MDEA	0.00751082	0.00751082	0.0119366	0.00806566	0.00171979
Piperazine	0.0113976	0.0113976	0.211527	0.024915	0.0820612
Phosphoric Acid	0	0	0	0	0
TEG	98.964	98.964	38.9856	95.3368	3.20392

Copyright © 2002-2022 BRE Group, Ltd.
Licensed to Trinity Consultants, Inc. and Affiliates

Process Streams Report
All Streams
Tabulated by Total Phase

Client Name:	Targa Resources	Job:	
Location:	Roadrunner Gas Processing Plant		
Flowsheet:	RR2 TEG		

Mass Fraction	25 %	26 %	27 %	28 %	29 %
O2	0	0	0	0	0

Mass Flow	25 lb/h	26 lb/h	27 lb/h	28 lb/h	29 lb/h
H2S	0	0	8.77571E-08	8.96647E-08	2.28314E-05
CO2	0	0	5.29307E-07	5.33198E-07	0.000640712
N2	0	0	5.79722E-07	5.80377E-07	0.00880545
Methane	2.13875E-06	2.13875E-06	0.000801343	0.000803257	4.64111
Ethane	2.58076E-05	2.58076E-05	0.00475559	0.00477818	10.2995
Propane	0.000122499	0.000122499	0.014972	0.0150783	17.9174
i-Butane	5.26051E-05	5.26051E-05	0.00505357	0.00509892	4.37454
n-Butane	0.000359592	0.000359592	0.0289791	0.0292909	17.7253
i-Pentane	0.000336672	0.000336672	0.0197729	0.0200645	7.51671
n-Pentane	0.00056072	0.00056072	0.0301821	0.0306663	10.0848
n-Hexane	0.0047148	0.0047148	0.117199	0.121282	15.4883
n-Heptane	0.00502716	0.00502716	0.137218	0.141542	15.6601
n-Octane	0.00251644	0.00251644	0.0540891	0.0562518	3.93886
n-Nonane	0	0	0	0	0
n-Decane	0	0	0	0	0
Undecane	0	0	0	0	0
Benzene	0.171791	0.171791	1.61146	1.75902	29.6647
Toluene	0.421326	0.421326	2.87809	3.24167	28.0215
Ethylbenzene	0.58861	0.58861	2.9657	3.47615	16.8114
m-Xylene	0.420678	0.420678	2.11906	2.48347	11.6036
Water	227.959	227.959	872.543	1100.58	1328.47
MDEA	1.69525	1.69525	0.173289	1.93699	0.027069
Piperazine	2.57253	2.57253	3.07083	5.9834	1.29162
Phosphoric Acid	0	0	0	0	0
TEG	22336.9	22336.9	565.972	22895.3	50.4287
O2	0	0	0	0	0

Stream Properties

Property	Units	25	26	27	28	29
Temperature	°F	216.426	125 *	400 *	298.661	290.416
Pressure	psia	64.6959	59.6959	16.6959	16.6959	15.6959
Mole Fraction Vapor	%	0	0	100	0	100
Mole Fraction Light Liquid	%	100	100	0	100	0
Mole Fraction Heavy Liquid	%	0	0	0	0	0
Molecular Weight	lb/lbmol	139.796	139.796	27.7346	112.349	20.4208
Mass Density	lb/ft^3	65.1127	68.423	0.0505664	62.2193	0.0400963
Molar Flow	lbmol/h	161.455	161.455	52.3442	213.756	77.0768
Mass Flow	lb/h	22570.7	22570.7	1451.75	24015.2	1573.97
Vapor Volumetric Flow	ft^3/h	346.641	329.871	28709.7	385.977	39254.8
Liquid Volumetric Flow	gpm	43.2176	41.1267	3579.39	48.1218	4894.1
Std Vapor Volumetric Flow	MMSCFD	1.47047	1.47047	0.476731	1.94681	0.701986
Std Liquid Volumetric Flow	sgpm	40 *	40	2.77793	42.7653	3.33996
Specific Gravity		1.044	1.09707	0.957604	0.997603	0.705077
API Gravity		-6.67615	-6.67544		-5.8686	
Net Ideal Gas Heating Value	Btu/ft^3	3480.95	3480.95	283.104	2697.71	141.388
Net Liquid Heating Value	Btu/lb	9181.53	9181.53	3133.67	8815.86	1704.11
Gross Ideal Gas Heating Value	Btu/ft^3	3809.1	3809.1	355.609	2963.25	199.658
Gross Liquid Heating Value	Btu/lb	10072.3	10072.3	4125.73	9712.78	2786.98

Remarks

ProMax 6.0.22251.0
Copyright © 2002-2022 BRE Group, Ltd.
Licensed to Trinity Consultants, Inc. and Affiliates

Process Streams Report
All Streams
Tabulated by Total Phase

Client Name:	Targa Resources	Job:	
Location:	Roadrunner Gas Processing Plant		
Flowsheet:	RR2 TEG		

Connections

	30	31	32	34	
From Block	VSSL-104	VSSL-104	FAXR-101	VSSL-105	
To Block	DTWR-101	FAXR-101	VSSL-105	--	

Stream Composition

Mole Fraction	30 %	31 %	32 %	34 %	
H2S	1.93069E-09	9.34794E-07	9.34794E-07	4.40747E-08	
CO2	1.17049E-08	2.0317E-05	2.0317E-05	3.1109E-07	
N2	1.25975E-08	0.000438679	0.000438679	3.15256E-07	
Methane	2.61566E-05	0.403749	0.403749	0.000899949	
Ethane	4.86504E-05	0.47803	0.47803	0.00456148	
Propane	6.5138E-05	0.567072	0.567072	0.0143554	
i-Butane	8.80202E-06	0.105039	0.105039	0.00524862	
n-Butane	6.73683E-05	0.425607	0.425607	0.0320562	
i-Pentane	1.9124E-05	0.145397	0.145397	0.0247831	
n-Pentane	2.68898E-05	0.195073	0.195073	0.041174	
n-Hexane	3.65099E-05	0.250828	0.250828	0.109464	
n-Heptane	2.71956E-05	0.21811	0.21811	0.150573	
n-Octane	6.2838E-06	0.0481231	0.0481231	0.042409	
n-Nonane	0	0	0	0	
n-Decane	0	0	0	0	
Undecane	0	0	0	0	
Benzene	0.00302742	0.529781	0.529781	0.316352	
Toluene	0.00302318	0.424208	0.424208	0.343588	
Ethylbenzene	0.00161442	0.220874	0.220874	0.208703	
m-Xylene	0.00114287	0.15245	0.15245	0.14395	
Water	93.6668	95.8239	95.8239	98.5503	
MDEA	0.000673	0.00026609	0.00026609	0.00026839	
Piperazine	0.168292	0.00818999	0.00818999	0.00845286	
Phosphoric Acid	0	0	0	0	
TEG	6.15506	0.0027973	0.0027973	0.00288712	
O2	0	0	0	0	

Mass Fraction	30 %	31 %	32 %	34 %	
H2S	2.50459E-09	1.59469E-06	1.59469E-06	7.87478E-08	
CO2	1.96078E-08	4.47563E-05	4.47563E-05	7.17745E-07	
N2	1.34327E-08	0.000615122	0.000615122	4.62985E-07	
Methane	1.59722E-05	0.324213	0.324213	0.00075688	
Ethane	5.56826E-05	0.719488	0.719488	0.00719058	
Propane	0.000109331	1.25165	1.25165	0.0331855	
i-Butane	1.94732E-05	0.30559	0.30559	0.0159928	
n-Butane	0.000149043	1.23822	1.23822	0.0976768	
i-Pentane	5.25196E-05	0.52509	0.52509	0.0937395	
n-Pentane	7.38466E-05	0.70449	0.70449	0.155736	
n-Hexane	0.000119759	1.08195	1.08195	0.494528	
n-Heptane	0.000103726	1.09396	1.09396	0.790972	
n-Octane	2.73219E-05	0.275155	0.275155	0.253963	
n-Nonane	0	0	0	0	
n-Decane	0	0	0	0	
Undecane	0	0	0	0	
Benzene	0.00900124	2.07139	2.07139	1.29546	
Toluene	0.0106028	1.95645	1.95645	1.65965	
Ethylbenzene	0.00652396	1.17375	1.17375	1.16158	
m-Xylene	0.00461841	0.810135	0.810135	0.801181	
Water	64.2304	86.4099	86.4099	93.0758	
MDEA	0.00305258	0.00158714	0.00158714	0.00167665	
Piperazine	0.551771	0.0353114	0.0353114	0.0381702	
Phosphoric Acid	0	0	0	0	
TEG	35.1833	0.0210271	0.0210271	0.0227297	

Copyright © 2002-2022 BRE Group, Ltd.
Licensed to Trinity Consultants, Inc. and Affiliates

Process Streams Report
All Streams
Tabulated by Total Phase

Client Name:	Targa Resources	Job:
Location:	Roadrunner Gas Processing Plant	
Flowsheet:	RR2 TEG	

Mass Fraction	30 %	31 %	32 %	34 %
O2	0	0	0	0

Mass Flow	30 lb/h	31 lb/h	32 lb/h	34 lb/h
H2S	3.56843E-09	2.28278E-05	2.28278E-05	1.04283E-06
CO2	2.79364E-08	0.000640684	0.000640684	9.50483E-06
N2	1.91383E-08	0.00880543	0.00880543	6.13114E-06
Methane	2.27566E-05	4.64109	4.64109	0.0100231
Ethane	7.93342E-05	10.2994	10.2994	0.0952221
Propane	0.00015577	17.9172	17.9172	0.439464
i-Butane	2.77446E-05	4.37451	4.37451	0.211787
n-Butane	0.00021235	17.7251	17.7251	1.2935
i-Pentane	7.48277E-05	7.51663	7.51663	1.24136
n-Pentane	0.000105213	10.0847	10.0847	2.06236
n-Hexane	0.000170627	15.4881	15.4881	6.54884
n-Heptane	0.000147785	15.66	15.66	10.4745
n-Octane	3.8927E-05	3.93882	3.93882	3.36314
n-Nonane	0	0	0	0
n-Decane	0	0	0	0
Undecane	0	0	0	0
Benzene	0.0128246	29.6518	29.6518	17.1553
Toluene	0.0151063	28.0064	28.0064	21.9781
Ethylbenzene	0.00929505	16.8021	16.8021	15.3823
m-Xylene	0.00658011	11.597	11.597	10.6097
Water	91.5126	1236.95	1236.95	1232.57
MDEA	0.00434918	0.0227199	0.0227199	0.0222033
Piperazine	0.786139	0.50548	0.50548	0.505474
Phosphoric Acid	0	0	0	0
TEG	50.1277	0.301002	0.301002	0.301002
O2	0	0	0	0

Stream Properties

Property	Units	30	31	32	34
Temperature	°F	215	215 *	120 *	120
Pressure	psia	15.6959	15.6959	15.4959	15.4959
Mole Fraction Vapor	%	0	100	3.11107	0
Mole Fraction Light Liquid	%	100	0	1.38267	1.42706
Mole Fraction Heavy Liquid	%	0	0	95.5063	98.5729
Molecular Weight	lb/lbmol	26.2716	19.978	19.978	19.0749
Mass Density	lb/ft^3	62.5148	0.0437006	1.58662	60.5532
Molar Flow	lbmol/h	5.42318	71.6536	71.6536	69.4244
Mass Flow	lb/h	142.476	1431.49	1431.49	1324.26
Vapor Volumetric Flow	ft^3/h	2.27907	32756.9	902.227	21.8694
Liquid Volumetric Flow	gpm	0.284144	4083.97	112.485	2.72657
Std Vapor Volumetric Flow	MMSCFD	0.0493923	0.652594	0.652594	0.632291
Std Liquid Volumetric Flow	sgpm	0.273946	3.06601	3.06601	2.6925
Specific Gravity		1.00234	0.689788		0.970891
API Gravity		2.56565			12.2763
Net Ideal Gas Heating Value	Btu/ft^3	238.24	134.058	134.058	62.8027
Net Liquid Heating Value	Btu/lb	2667.8	1608.2	1608.2	250.938
Gross Ideal Gas Heating Value	Btu/ft^3	307.462	191.498	191.498	115.985
Gross Liquid Heating Value	Btu/lb	3667.69	2699.32	2699.32	1308.97

Remarks

ProMax 6.0.22251.0
Copyright © 2002-2022 BRE Group, Ltd.
Licensed to Trinity Consultants, Inc. and Affiliates

2 - Amine
Plant Schematic

Client Name:	Targa Resources	Job:
Location:	Roadrunner Gas Processing Plant	
Flowsheet:	2 - Amine	

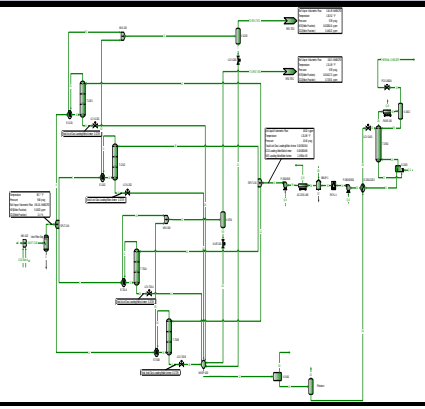

ProMax 6.0.22251.0
Copyright © 2002-2022 BRE Group, Ltd.
Licensed to Trinity Consultants, Inc. and Affiliates

Process Streams Report
All Streams
Tabulated by Total Phase

Client Name:	Targa Resources	Job:	
Location:	Roadrunner Gas Processing Plant		
Flowsheet:	2 - Amine		

Connections

	CO2 Blend	H2S Blend	INLET GAS	THERMAL OXIDIZER	TO RR1 TEG
From Block	--	--	MIX-102	PCV-2402A	V-1203
To Block	MIX-102	MIX-102	Inlet Filter Sep	--	RR1 TEG

Stream Composition

Mole Fraction	CO2 Blend %	H2S Blend %	INLET GAS %	THERMAL OXIDIZER %	TO RR1 TEG %
H2S	0 *	100 *	0.000508331	0.0196863	3.82407E-07
CO2	100 *	0 *	2.39998	92.984	4.40228E-05
N2	0 *	0 *	1.19343	0.000221883	1.21997
Methane	0 *	0 *	76.4112	0.180232	78.0698
Ethane	0 *	0 *	11.1772	0.056343	11.4173
Propane	0 *	0 *	5.30026	0.0150425	5.41593
i-Butane	0 *	0 *	0.721309	0.00104336	0.737229
n-Butane	0 *	0 *	1.60472	0.00489282	1.63982
i-Pentane	0 *	0 *	0.361554	0.000243357	0.369597
n-Pentane	0 *	0 *	0.380031	0.000425471	0.388456
n-Hexane	0 *	0 *	0.249162	0.000151972	0.254715
n-Heptane	0 *	0 *	0.136789	1.93004E-05	0.139855
n-Octane	0 *	0 *	0.020788	3.25627E-06	0.0212541
n-Nonane	0 *	0 *	0	0	0
n-Decane	0 *	0 *	0	0	0
Undecane	0 *	0 *	0	0	0
Benzene	0 *	0 *	0.0228358	0.0356163	0.0223446
Toluene	0 *	0 *	0.0119629	0.0165552	0.0117674
Ethylbenzene	0 *	0 *	0.00490284	0.00462434	0.00488258
m-Xylene	0 *	0 *	0.00333393	0.00454739	0.00328332
Water	0 *	0 *	0	6.67633	0.283708
MDEA	0 *	0 *	0	3.35603E-08	3.07719E-06
Piperazine	0 *	0 *	0	3.51131E-08	6.94283E-05
TEG	0 *	0 *	0	0	0

Mass Fraction	CO2 Blend %	H2S Blend %	INLET GAS %	THERMAL OXIDIZER %	TO RR1 TEG %
H2S	0 *	100 *	0.000800308	0.0158834	6.1802E-07
CO2	100 *	0 *	4.87926	96.8776	9.18734E-05
N2	0 *	0 *	1.5444	0.000147149	1.62062
Methane	0 *	0 *	56.6276	0.0684498	59.3909
Ethane	0 *	0 *	15.5257	0.0401077	16.2798
Propane	0 *	0 *	10.7967	0.0157031	11.3249
i-Butane	0 *	0 *	1.9367	0.00143563	2.03194
n-Butane	0 *	0 *	4.30864	0.0067324	4.51964
i-Pentane	0 *	0 *	1.20504	0.000415664	1.26452
n-Pentane	0 *	0 *	1.26662	0.00072672	1.32904
n-Hexane	0 *	0 *	0.991894	0.000310039	1.04089
n-Heptane	0 *	0 *	0.63318	4.57837E-05	0.664539
n-Octane	0 *	0 *	0.109695	8.8057E-06	0.115129
n-Nonane	0 *	0 *	0	0	0
n-Decane	0 *	0 *	0	0	0
Undecane	0 *	0 *	0	0	0
Benzene	0 *	0 *	0.0824011	0.0658619	0.0827666
Toluene	0 *	0 *	0.0509188	0.0361114	0.0514146
Ethylbenzene	0 *	0 *	0.0240452	0.0116225	0.0245808
m-Xylene	0 *	0 *	0.0163508	0.0114291	0.0165296
Water	0 *	0 *	0	2.8474	0.24237
MDEA	0 *	0 *	0	9.46745E-08	1.73884E-05
Piperazine	0 *	0 *	0	7.16012E-08	0.000283586
TEG	0 *	0 *	0	0	0

Copyright © 2002-2022 BRE Group, Ltd.
Licensed to Trinity Consultants, Inc. and Affiliates

Process Streams Report
All Streams
Tabulated by Total Phase

Client Name:	Targa Resources	Job:
Location:	Roadrunner Gas Processing Plant	
Flowsheet:	2 - Amine	

Mass Flow	CO2 Blend lb/h	H2S Blend lb/h	INLET GAS lb/h	THERMAL OXIDIZER lb/h	TO RR1 TEG lb/h
H2S	0 *	9.35505 *	9.35505	9.31634	0.00344132
CO2	57035.2 *	0 *	57035.2	56823.2	0.511578
N2	0 *	0 *	18053	0.0863098	9024.1
Methane	0 *	0 *	661938	40.149	330706
Ethane	0 *	0 *	181485	23.525	90650.7
Propane	0 *	0 *	126206	9.21058	63060.4
i-Butane	0 *	0 *	22638.7	0.842065	11314.4
n-Butane	0 *	0 *	50365.1	3.94886	25166.7
i-Pentane	0 *	0 *	14086.1	0.243806	7041.19
n-Pentane	0 *	0 *	14806	0.426255	7400.46
n-Hexane	0 *	0 *	11594.6	0.181852	5795.97
n-Heptane	0 *	0 *	7401.44	0.0268543	3700.35
n-Octane	0 *	0 *	1282.26	0.00516495	641.071
n-Nonane	0 *	0 *	0	0	0
n-Decane	0 *	0 *	0	0	0
Undecane	0 *	0 *	0	0	0
Benzene	0 *	0 *	963.212	38.6311	460.868
Toluene	0 *	0 *	595.206	21.181	286.292
Ethylbenzene	0 *	0 *	281.072	6.81713	136.873
m-Xylene	0 *	0 *	191.129	6.7037	92.0414
Water	0 *	0 *	0	1670.13	1349.59
MDEA	0 *	0 *	0	5.5531E-05	0.0968236
Piperazine	0 *	0 *	0	4.19974E-05	1.57909
TEG	0 *	0 *	0	0	0

Stream Properties

Property	Units	CO2 Blend	H2S Blend	INLET GAS	THERMAL OXIDIZER	TO RR1 TEG
Temperature	°F	92 *	92 *	90.8353	119.507	130.518
Pressure	psia	967.696 *	967.696 *	964.696	21.6959 *	953.696
Mole Fraction Vapor	%	100	0	100	100	100
Mole Fraction Light Liquid	%	0	100	0	0	0
Mole Fraction Heavy Liquid	%	0	0	0	0	0
Molecular Weight	lb/lbmol	44.0095	34.0809	21.6471	42.2407	21.0879
Mass Density	lb/ft^3	13.0549	47.2179	4.45012	0.14846	3.74812
Molar Flow	lbmol/h	1295.97	0.274495	53999.4	1388.58	26405.1
Mass Flow	lb/h	57035.2	9.35505	1.16893E+06	58654.6	556829
Vapor Volumetric Flow	ft^3/h	4368.87	0.198125	262674	395087	148562
Liquid Volumetric Flow	gpm	544.69	0.0247013	32749	49257.6	18522
Std Vapor Volumetric Flow	MMSCFD	11.8032 *	0.0025 *	491.806	12.6467	240.488
Std Liquid Volumetric Flow	sgpm	139.527	0.0234103	6522.32	142.993	3191.46
Specific Gravity		1.51953	0.757077	0.747419	1.45846	0.728111
API Gravity			46.0776			
Net Ideal Gas Heating Value	Btu/ft^3	0	586.79	1116.86	5.66555	1141.05
Net Liquid Heating Value	Btu/lb	-74.8536	6332	19517.4	-52.1569	20470.1
Gross Ideal Gas Heating Value	Btu/ft^3	0	637.1	1230.92	9.45852	1257.73
Gross Liquid Heating Value	Btu/lb	-74.8536	6892.4	21517.3	-18.0806	22570.2

Remarks

ProMax 6.0.22251.0
Copyright © 2002-2022 BRE Group, Ltd.
Licensed to Trinity Consultants, Inc. and Affiliates

Process Streams Report
All Streams
Tabulated by Total Phase

Client Name:	Targa Resources	Job:
Location:	Roadrunner Gas Processing Plant	
Flowsheet:	2 - Amine	

Connections

	TO RR2 TEG	1	2	3	4
From Block	V-0701	--	Inlet Filter Sep	Inlet Filter Sep	SPLT-104
To Block	RR2 TEG	MIX-102	SPLT-104	--	E-1101

Stream Composition

Mole Fraction	TO RR2 TEG %	1 %	2 %	3 %	4 %
H2S	4.12706E-07	0 *	0.000508331		0.000508331
CO2	7.19315E-05	0 *	2.39998		2.39998
N2	1.21992	1.22278 *	1.19343		1.19343
Methane	78.0664	78.2906 *	76.4112		76.4112
Ethane	11.4168	11.4521 *	11.1772		11.1772
Propane	5.4157	5.43062 *	5.30026		5.30026
i-Butane	0.737198	0.73905 *	0.721309		0.721309
n-Butane	1.63975	1.64419 *	1.60472		1.60472
i-Pentane	0.369581	0.370446 *	0.361554		0.361554
n-Pentane	0.388439	0.389378 *	0.380031		0.380031
n-Hexane	0.254704	0.255291 *	0.249162		0.249162
n-Heptane	0.139849	0.140153 *	0.136789		0.136789
n-Octane	0.0212532	0.0212993 *	0.020788		0.020788
n-Nonane	0	0 *	0		0
n-Decane	0	0 *	0		0
Undecane	0	0 *	0		0
Benzene	0.0223416	0.0233975 *	0.0228358		0.0228358
Toluene	0.0117656	0.0122572 *	0.0119629		0.0119629
Ethylbenzene	0.0048817	0.00502342 *	0.00490284		0.00490284
m-Xylene	0.00328228	0.00341593 *	0.00333393		0.00333393
Water	0.287946	0 *	0		0
MDEA	3.18497E-06	0 *	0		0
Piperazine	6.95844E-05	0 *	0		0
TEG	0	0 *	0		0

Mass Fraction	TO RR2 TEG %	1 %	2 %	3 %	4 %
H2S	6.66991E-07	0 *	0.000800308		0.000800308
CO2	0.000150119	0 *	4.87926		4.87926
N2	1.62056	1.62364 *	1.5444		1.5444
Methane	59.3887	59.5328 *	56.6276		56.6276
Ethane	16.2792	16.3223 *	15.5257		15.5257
Propane	11.3245	11.3506 *	10.7967		10.7967
i-Butane	2.03186	2.03607 *	1.9367		1.9367
n-Butane	4.51948	4.5297 *	4.30864		4.30864
i-Pentane	1.26447	1.26686 *	1.20504		1.20504
n-Pentane	1.32899	1.33161 *	1.26662		1.26662
n-Hexane	1.04085	1.04278 *	0.991894		0.991894
n-Heptane	0.664514	0.665665 *	0.63318		0.63318
n-Octane	0.115125	0.115323 *	0.109695		0.109695
n-Nonane	0	0 *	0		0
n-Decane	0	0 *	0		0
Undecane	0	0 *	0		0
Benzene	0.0827559	0.0866286 *	0.0824011		0.0824011
Toluene	0.0514072	0.0535311 *	0.0509188		0.0509188
Ethylbenzene	0.0245766	0.0252788 *	0.0240452		0.0240452
m-Xylene	0.0165244	0.0171896 *	0.0163508		0.0163508
Water	0.245992	0 *	0		0
MDEA	1.79975E-05	0 *	0		0
Piperazine	0.000284226	0 *	0		0
TEG	0	0 *	0		0

Copyright © 2002-2022 BRE Group, Ltd.
Licensed to Trinity Consultants, Inc. and Affiliates

Process Streams Report
All Streams
Tabulated by Total Phase

Client Name:	Targa Resources	Job:
Location:	Roadrunner Gas Processing Plant	
Flowsheet:	2 - Amine	

Mass Flow	TO RR2 TEG lb/h	1 lb/h	2 lb/h	3 lb/h	4 lb/h
H2S	0.00371414	0 *	9.35505	0	2.33876
CO2	0.835935	0 *	57035.2	0	14258.8
N2	9024.1	18053 *	18053	0	4513.26
Methane	330706	661938 *	661938	0	165484
Ethane	90650.7	181485 *	181485	0	45371.3
Propane	63060.5	126206 *	126206	0	31551.6
i-Butane	11314.4	22638.7 *	22638.7	0	5659.69
n-Butane	25166.7	50365.1 *	50365.1	0	12591.3
i-Pentane	7041.18	14086.1 *	14086.1	0	3521.52
n-Pentane	7400.46	14806 *	14806	0	3701.49
n-Hexane	5795.97	11594.6 *	11594.6	0	2898.64
n-Heptane	3700.35	7401.44 *	7401.44	0	1850.36
n-Octane	641.071	1282.26 *	1282.26	0	320.565
n-Nonane	0	0 *	0	0	0
n-Decane	0	0 *	0	0	0
Undecane	0	0 *	0	0	0
Benzene	460.826	963.212 *	963.212	0	240.803
Toluene	286.261	595.206 *	595.206	0	148.801
Ethylbenzene	136.855	281.072 *	281.072	0	70.268
m-Xylene	92.016	191.129 *	191.129	0	47.7823
Water	1369.81	0 *	0	0	0
MDEA	0.100219	0 *	0	0	0
Piperazine	1.58271	0 *	0	0	0
TEG	0	0 *	0	0	0

Stream Properties

Property	Units	TO RR2 TEG	1	2	3	4
Temperature	°F	131.094	92 *	90.7		90.7
Pressure	psia	953.696	964.696 *	962.696	962.696	962.696
Mole Fraction Vapor	%	100	100	100		100
Mole Fraction Light Liquid	%	0	0	0		0
Mole Fraction Heavy Liquid	%	0	0	0		0
Molecular Weight	lb/lbmol	21.0878	21.0972	21.6471		21.6471
Mass Density	lb/ft^3	3.74178	4.31035	4.44112		4.44112
Molar Flow	lbmol/h	26406.3	52703.1	53999.4	0	13499.8
Mass Flow	lb/h	556850	1.11189E+06	1.16893E+06	0	292233
Vapor Volumetric Flow	ft^3/h	148820	257957	263207	0	65801.6
Liquid Volumetric Flow	gpm	18554.1	32160.9	32815.4	0	8203.84
Std Vapor Volumetric Flow	MMSCFD	240.498	480 *	491.806	0	122.951
Std Liquid Volumetric Flow	sgpm	3191.51	6382.77	6522.32	0	1630.58
Specific Gravity		0.728107	0.728431	0.747419		0.747419
API Gravity						
Net Ideal Gas Heating Value	Btu/ft^3	1141	1144.32	1116.86		1116.86
Net Liquid Heating Value	Btu/lb	20469.3	20522.5	19517.4		19517.4
Gross Ideal Gas Heating Value	Btu/ft^3	1257.67	1261.19	1230.92		1230.92
Gross Liquid Heating Value	Btu/lb	22569.3	22625	21517.3		21517.3

Remarks

ProMax 6.0.22251.0
Copyright © 2002-2022 BRE Group, Ltd.
Licensed to Trinity Consultants, Inc. and Affiliates

Process Streams Report
All Streams
Tabulated by Total Phase

Client Name:	Targa Resources	Job:
Location:	Roadrunner Gas Processing Plant	
Flowsheet:	2 - Amine	

Connections

	5	6	7	8	9
From Block	SPLT-104	T-701A	V-1203	SPLT-104	T-1202
To Block	E-1102	E-701A	LCV-1203	E-701A	E-1102

Stream Composition

Mole Fraction	5 %	6 %	7 %	8 %	9 %
H2S	0.000508331	4.86451E-07	6.3804E-05	0.000508331	4.63348E-07
CO2	2.39998	0.000105201	0.0201722	2.39998	6.97111E-05
N2	1.19343	1.21834	0.000712945	1.19343	1.21842
Methane	76.4112	77.9654	0.0738877	76.4112	77.9702
Ethane	11.1772	11.402	0.0086635	11.1772	11.4027
Propane	5.30026	5.40869	0.00244934	5.30026	5.40902
i-Butane	0.721309	0.736243	0.000175428	0.721309	0.736288
n-Butane	1.60472	1.63763	0.00056638	1.60472	1.63773
i-Pentane	0.361554	0.369103	4.71055E-05	0.361554	0.369126
n-Pentane	0.380031	0.387936	6.31237E-05	0.380031	0.38796
n-Hexane	0.249162	0.254374	1.77972E-05	0.249162	0.25439
n-Heptane	0.136789	0.139668	4.42774E-06	0.136789	0.139677
n-Octane	0.020788	0.0212257	4.8201E-07	0.020788	0.021227
n-Nonane	0	0	0	0	0
n-Decane	0	0	0	0	0
Undecane	0	0	0	0	0
Benzene	0.0228358	0.0223133	0.000499312	0.0228358	0.0223167
Toluene	0.0119629	0.0117506	0.000154623	0.0119629	0.0117526
Ethylbenzene	0.00490284	0.00487543	3.85532E-05	0.00490284	0.0048764
m-Xylene	0.00333393	0.00327807	3.77431E-05	0.00333393	0.00327918
Water	0	0.416093	99.2438	0	0.410005
MDEA	0	0.000347647	0.262332	0	0.000337871
Piperazine	0	0.000573731	0.386333	0	0.000562392
TEG	0	0	0	0	0

Mass Fraction	5 %	6 %	7 %	8 %	9 %
H2S	0.000800308	7.86296E-07	0.000117222	0.000800308	7.48946E-07
CO2	4.87926	0.000219584	0.0478577	4.87926	0.000145506
N2	1.5444	1.61872	0.00107665	1.5444	1.6188
Methane	56.6276	59.3211	0.063899	56.6276	59.3243
Ethane	15.5257	16.2607	0.0140432	15.5257	16.2615
Propane	10.7967	11.3116	0.00582232	10.7967	11.3122
i-Butane	1.9367	2.02955	0.000549657	1.9367	2.02966
n-Butane	4.30864	4.51433	0.0017746	4.30864	4.51457
i-Pentane	1.20504	1.26303	0.000183211	1.20504	1.2631
n-Pentane	1.26662	1.32747	0.000245512	1.26662	1.32754
n-Hexane	0.991894	1.03966	8.26775E-05	0.991894	1.03972
n-Heptane	0.63318	0.663757	2.39172E-05	0.63318	0.663793
n-Octane	0.109695	0.114993	2.96812E-06	0.109695	0.115
n-Nonane	0	0	0	0	0
n-Decane	0	0	0	0	0
Undecane	0	0	0	0	0
Benzene	0.0824011	0.082664	0.00210252	0.0824011	0.082676
Toluene	0.0509188	0.0513495	0.000768007	0.0509188	0.0513577
Ethylbenzene	0.0240452	0.0245488	0.000220645	0.0240452	0.0245535
m-Xylene	0.0163508	0.0165058	0.000216008	0.0163508	0.0165112
Water	0	0.355523	96.382	0	0.350318
MDEA	0	0.00196478	1.68516	0	0.00190951
Piperazine	0	0.00234384	1.79389	0	0.0022975
TEG	0	0	0	0	0

Copyright © 2002-2022 BRE Group, Ltd.
Licensed to Trinity Consultants, Inc. and Affiliates

Process Streams Report
All Streams
Tabulated by Total Phase

Client Name:	Targa Resources	Job:
Location:	Roadrunner Gas Processing Plant	
Flowsheet:	2 - Amine	

Mass Flow	5 lb/h	6 lb/h	7 lb/h	8 lb/h	9 lb/h
H2S	2.33876	0.00219174	0.000733723	2.33876	0.00208752
CO2	14258.8	0.612074	0.299554	14258.8	0.405566
N2	4513.26	4512.05	0.00673901	4513.26	4512.05
Methane	165484	165353	0.39996	165484	165353
Ethane	45371.3	45325.4	0.0878996	45371.3	45325.4
Propane	31551.6	31530.3	0.0364434	31551.6	31530.2
i-Butane	5659.69	5657.22	0.00344044	5659.69	5657.21
n-Butane	12591.3	12583.4	0.0111077	12591.3	12583.4
i-Pentane	3521.52	3520.59	0.00114677	3521.52	3520.59
n-Pentane	3701.49	3700.23	0.00153672	3701.49	3700.23
n-Hexane	2898.64	2897.99	0.000517499	2898.64	2897.99
n-Heptane	1850.36	1850.17	0.000149704	1850.36	1850.17
n-Octane	320.565	320.536	1.85782E-05	320.565	320.535
n-Nonane	0	0	0	0	0
n-Decane	0	0	0	0	0
Undecane	0	0	0	0	0
Benzene	240.803	230.42	0.0131602	240.803	230.441
Toluene	148.801	143.133	0.00480715	148.801	143.148
Ethylbenzene	70.268	68.428	0.00138107	70.268	68.4373
m-Xylene	47.7823	46.0087	0.00135205	47.7823	46.0214
Water	0	990.995	603.279	0	976.434
MDEA	0	5.47668	10.5478	0	5.32233
Piperazine	0	6.53327	11.2284	0	6.40376
TEG	0	0	0	0	0

Stream Properties

Property	Units	5	6	7	8	9
Temperature	°F	90.7	150.215	130.518	90.7	149.661
Pressure	psia	962.696	956.696	953.696	962.696	956.696
Mole Fraction Vapor	%	100	100	0	100	100
Mole Fraction Light Liquid	%	0	0	100	0	0
Mole Fraction Heavy Liquid	%	0	0	0	0	0
Molecular Weight	lb/lbmol	21.6471	21.0845	18.5502	21.6471	21.0847
Mass Density	lb/ft^3	4.44112	3.55867	61.6813	4.44112	3.564
Molar Flow	lbmol/h	13499.8	13220.3	33.7422	13499.8	13219.4
Mass Flow	lb/h	292233	278743	625.925	292233	278728
Vapor Volumetric Flow	ft^3/h	65801.6	78327.8	10.1477	65801.6	78206.4
Liquid Volumetric Flow	gpm	8203.84	9765.54	1.26517	8203.84	9750.41
Std Vapor Volumetric Flow	MMSCFD	122.951	120.405	0.307311	122.951	120.398
Std Liquid Volumetric Flow	sgpm	1630.58	1596.39	1.26153	1630.58	1596.36
Specific Gravity		0.747419	0.727994	0.988977	0.747419	0.727999
API Gravity				9.57553		
Net Ideal Gas Heating Value	Btu/ft^3	1116.86	1139.55	22.6062	1116.86	1139.62
Net Liquid Heating Value	Btu/lb	19517.4	20445.4	-569.287	19517.4	20446.5
Gross Ideal Gas Heating Value	Btu/ft^3	1230.92	1256.14	74.4595	1230.92	1256.22
Gross Liquid Heating Value	Btu/lb	21517.3	22544.2	491.483	21517.3	22545.4

Remarks

ProMax 6.0.22251.0
Copyright © 2002-2022 BRE Group, Ltd.
Licensed to Trinity Consultants, Inc. and Affiliates

Process Streams Report
All Streams
Tabulated by Total Phase

Client Name:	Targa Resources	Job:
Location:	Roadrunner Gas Processing Plant	
Flowsheet:	2 - Amine	

Connections

	10	11	12	13	14
From Block	SPLT-104	MIX-103	SPLT-101	T-1201	T-1202
To Block	E-701B	V-1203	T-701B	LCV-1201	LCV-1202

Stream Composition

Mole Fraction	10 %	11 %	12 %	13 %	14 %
H2S	0.000508331	4.63348E-07	0.000149017	0.00116624	0.00116624
CO2	2.39998	6.97111E-05	0.0109194	4.84671	4.84671
N2	1.19343	1.21842	0	0.00064251	0.00064251
Methane	76.4112	77.9702	0	0.122108	0.122108
Ethane	11.1772	11.4027	0	0.0227977	0.0227977
Propane	5.30026	5.40902	0	0.00722689	0.00722689
i-Butane	0.721309	0.736288	0	0.000635566	0.000635566
n-Butane	1.60472	1.63773	0	0.00203506	0.00203506
i-Pentane	0.361554	0.369126	0	0.000191902	0.000191902
n-Pentane	0.380031	0.38796	0	0.000260337	0.000260337
n-Hexane	0.249162	0.25439	0	0.000113224	0.000113224
n-Heptane	0.136789	0.139677	0	2.78129E-05	2.78129E-05
n-Octane	0.020788	0.021227	0	3.92654E-06	3.92654E-06
n-Nonane	0	0	0	0	0
n-Decane	0	0	0	0	0
Undecane	0	0	0	0	0
Benzene	0.0228358	0.0223167	0	0.00198025	0.00198025
Toluene	0.0119629	0.0117526	0	0.000915887	0.000915887
Ethylbenzene	0.00490284	0.0048764	0	0.000257401	0.000257401
m-Xylene	0.00333393	0.00327918	0	0.000247595	0.000247595
Water	0	0.410005	86.4187	81.9923	81.9923
MDEA	0	0.000337871	11.7622	11.2692	11.2692
Piperazine	0	0.000562392	1.80801	1.73122	1.73122
TEG	0	0	0	0	0

Mass Fraction	10 %	11 %	12 %	13 %	14 %
H2S	0.000800308	7.48946E-07	0.000163054	0.00124757	0.00124757
CO2	4.87926	0.000145506	0.0154287	6.69515	6.69515
N2	1.5444	1.6188	0	0.000564953	0.000564953
Methane	56.6276	59.3243	0	0.0614869	0.0614869
Ethane	15.5257	16.2615	0	0.0215168	0.0215168
Propane	10.7967	11.3122	0	0.0100026	0.0100026
i-Butane	1.9367	2.02966	0	0.0011595	0.0011595
n-Butane	4.30864	4.51457	0	0.00371267	0.00371267
i-Pentane	1.20504	1.2631	0	0.000434586	0.000434586
n-Pentane	1.26662	1.32754	0	0.000589564	0.000589564
n-Hexane	0.991894	1.03972	0	0.000306258	0.000306258
n-Heptane	0.63318	0.663793	0	8.7476E-05	8.7476E-05
n-Octane	0.109695	0.115	0	1.40783E-05	1.40783E-05
n-Nonane	0	0	0	0	0
n-Decane	0	0	0	0	0
Undecane	0	0	0	0	0
Benzene	0.0824011	0.082676	0	0.00485516	0.00485516
Toluene	0.0509188	0.0513577	0	0.0026488	0.0026488
Ethylbenzene	0.0240452	0.0245535	0	0.000857745	0.000857745
m-Xylene	0.0163508	0.0165112	0	0.000825069	0.000825069
Water	0	0.350318	49.9844	46.364	46.364
MDEA	0	0.00190951	45	42.15	42.15
Piperazine	0	0.0022975	5	4.68061	4.68061
TEG	0	0	0	0	0

Copyright © 2002-2022 BRE Group, Ltd.
Licensed to Trinity Consultants, Inc. and Affiliates

Process Streams Report
All Streams
Tabulated by Total Phase

Client Name:	Targa Resources	Job:
Location:	Roadrunner Gas Processing Plant	
Flowsheet:	2 - Amine	

Mass Flow	10 lb/h	11 lb/h	12 lb/h	13 lb/h	14 lb/h
H2S	2.33876	0.00417504	0.32598	2.66265	2.66265
CO2	14258.8	0.811132	30.8453	14289.2	14289.2
N2	4513.26	9024.11	0	1.20576	1.20576
Methane	165484	330706	0	131.23	131.23
Ethane	45371.3	90650.8	0	45.9226	45.9226
Propane	31551.6	63060.4	0	21.3483	21.3483
i-Butane	5659.69	11314.4	0	2.47467	2.47467
n-Butane	12591.3	25166.7	0	7.92383	7.92383
i-Pentane	3521.52	7041.19	0	0.927522	0.927522
n-Pentane	3701.49	7400.46	0	1.25829	1.25829
n-Hexane	2898.64	5795.97	0	0.653636	0.653636
n-Heptane	1850.36	3700.35	0	0.186697	0.186697
n-Octane	320.565	641.071	0	0.0300469	0.0300469
n-Nonane	0	0	0	0	0
n-Decane	0	0	0	0	0
Undecane	0	0	0	0	0
Benzene	240.803	460.882	0	10.3622	10.3622
Toluene	148.801	286.296	0	5.65325	5.65325
Ethylbenzene	70.268	136.875	0	1.83066	1.83066
m-Xylene	47.7823	92.0428	0	1.76092	1.76092
Water	0	1952.87	99929.5	98953.1	98953.1
MDEA	0	10.6447	89964.6	89959.3	89959.3
Piperazine	0	12.8075	9996.07	9989.67	9989.67
TEG	0	0	0	0	0

Stream Properties

Property	Units	10	11	12	13	14
Temperature	°F	90.7	130.574	131.89	139.76	139.76
Pressure	psia	962.696	954.696	1054.7	958.696	958.696
Mole Fraction Vapor	%	100	99.8725	0	0	0
Mole Fraction Light Liquid	%	0	0.127459	100	100	100
Mole Fraction Heavy Liquid	%	0	0	0	0	0
Molecular Weight	lb/lbmol	21.6471	21.0847	31.1469	31.8591	31.8591
Mass Density	lb/ft^3	4.44112	3.75597	63.9246	69.2924	69.2924
Molar Flow	lbmol/h	13499.8	26438.9	6418.67	6699.08	6699.08
Mass Flow	lb/h	292233	557455	199921	213427	213427
Vapor Volumetric Flow	ft^3/h	65801.6	148419	3127.46	3080.09	3080.09
Liquid Volumetric Flow	gpm	8203.84	18504.1	389.917	384.011	384.011
Std Vapor Volumetric Flow	MMSCFD	122.951	240.795	58.4588	61.0127	61.0127
Std Liquid Volumetric Flow	sgpm	1630.58	3192.73	400	434.217	434.217
Specific Gravity		0.747419		1.02495	1.11101	1.11101
API Gravity				3.7923	-5.52419	-5.52419
Net Ideal Gas Heating Value	Btu/ft^3	1116.86	1139.62	478.514	460.317	460.317
Net Liquid Heating Value	Btu/lb	19517.4	20446.5	5133.88	4830.63	4830.63
Gross Ideal Gas Heating Value	Btu/ft^3	1230.92	1256.22	564.961	542.92	542.92
Gross Liquid Heating Value	Btu/lb	21517.3	22545.4	6187.12	5814.54	5814.54

Remarks

ProMax 6.0.22251.0
Copyright © 2002-2022 BRE Group, Ltd.
Licensed to Trinity Consultants, Inc. and Affiliates

Process Streams Report
All Streams
Tabulated by Total Phase

Client Name:	Targa Resources	Job:
Location:	Roadrunner Gas Processing Plant	
Flowsheet:	2 - Amine	

Connections

	15	16	18	19	20
From Block	SPLT-101	T-701B	LCV-1201	LCV-1202	T-701A
To Block	T-701A	E-701B	MXSP-100	MXSP-100	LCV-701A

Stream Composition

Mole Fraction	15 %	16 %	18 %	19 %	20 %
H2S	0.000149017	4.86451E-07	0.00116624	0.00116624	0.00116634
CO2	0.0109194	0.000105201	4.84671	4.84671	4.84724
N2	0	1.21834	0.00064251	0.00064251	0.000643466
Methane	0	77.9654	0.122108	0.122108	0.122034
Ethane	0	11.402	0.0227977	0.0227977	0.0227942
Propane	0	5.40869	0.00722689	0.00722689	0.00721761
i-Butane	0	0.736243	0.000635566	0.000635566	0.000633685
n-Butane	0	1.63763	0.00203506	0.00203506	0.00203106
i-Pentane	0	0.369103	0.000191902	0.000191902	0.000192294
n-Pentane	0	0.387936	0.000260337	0.000260337	0.000260563
n-Hexane	0	0.254374	0.000113224	0.000113224	0.000113169
n-Heptane	0	0.139668	2.78129E-05	2.78129E-05	2.78154E-05
n-Octane	0	0.0212257	3.92654E-06	3.92654E-06	3.90855E-06
n-Nonane	0	0	0	0	0
n-Decane	0	0	0	0	0
Undecane	0	0	0	0	0
Benzene	0	0.0223133	0.00198025	0.00198025	0.0019845
Toluene	0	0.0117506	0.000915887	0.000915887	0.00091846
Ethylbenzene	0	0.00487543	0.000257401	0.000257401	0.00025874
m-Xylene	0	0.00327807	0.000247595	0.000247595	0.000249411
Water	86.4187	0.416093	81.9923	81.9923	81.9903
MDEA	11.7622	0.000347647	11.2692	11.2692	11.2705
Piperazine	1.80801	0.000573731	1.73122	1.73122	1.73141
TEG	0	0	0	0	0

Mass Fraction	15 %	16 %	18 %	19 %	20 %
H2S	0.000163054	7.86296E-07	0.00124757	0.00124757	0.00124761
CO2	0.0154287	0.000219584	6.69515	6.69515	6.69553
N2	0	1.61872	0.000564953	0.000564953	0.000565765
Methane	0	59.3211	0.0614869	0.0614869	0.0614465
Ethane	0	16.2607	0.0215168	0.0215168	0.0215123
Propane	0	11.3116	0.0100026	0.0100026	0.00998926
i-Butane	0	2.02955	0.0011595	0.0011595	0.001156
n-Butane	0	4.51433	0.00371267	0.00371267	0.00370517
i-Pentane	0	1.26303	0.000434586	0.000434586	0.000435451
n-Pentane	0	1.32747	0.000589564	0.000589564	0.000590047
n-Hexane	0	1.03966	0.000306258	0.000306258	0.000306095
n-Heptane	0	0.663757	8.7476E-05	8.7476E-05	8.74794E-05
n-Octane	0	0.114993	1.40783E-05	1.40783E-05	1.40131E-05
n-Nonane	0	0	0	0	0
n-Decane	0	0	0	0	0
Undecane	0	0	0	0	0
Benzene	0	0.082664	0.00485516	0.00485516	0.00486534
Toluene	0	0.0513495	0.0026488	0.0026488	0.0026561
Ethylbenzene	0	0.0245488	0.000857745	0.000857745	0.000862163
m-Xylene	0	0.0165058	0.000825069	0.000825069	0.000831078
Water	49.9844	0.355523	46.364	46.364	46.3604
MDEA	45	0.00196478	42.15	42.15	42.1529
Piperazine	5	0.00234384	4.68061	4.68061	4.68088
TEG	0	0	0	0	0

ProMax 6.0.22251.0
Copyright © 2002-2022 BRE Group, Ltd.
Licensed to Trinity Consultants, Inc. and Affiliates

Process Streams Report
All Streams
Tabulated by Total Phase

Client Name:	Targa Resources	Job:
Location:	Roadrunner Gas Processing Plant	
Flowsheet:	2 - Amine	

Mass Flow	15 lb/h	16 lb/h	18 lb/h	19 lb/h	20 lb/h
H2S	0.32598	0.00219174	2.66265	2.66265	2.66255
CO2	30.8453	0.612074	14289.2	14289.2	14289
N2	0	4512.05	1.20576	1.20576	1.20741
Methane	0	165353	131.23	131.23	131.134
Ethane	0	45325.4	45.9226	45.9226	45.9098
Propane	0	31530.3	21.3483	21.3483	21.3182
i-Butane	0	5657.22	2.47467	2.47467	2.46705
n-Butane	0	12583.4	7.92383	7.92383	7.90727
i-Pentane	0	3520.59	0.927522	0.927522	0.929304
n-Pentane	0	3700.23	1.25829	1.25829	1.25923
n-Hexane	0	2897.99	0.653636	0.653636	0.653242
n-Heptane	0	1850.17	0.186697	0.186697	0.186691
n-Octane	0	320.536	0.0300469	0.0300469	0.0299056
n-Nonane	0	0	0	0	0
n-Decane	0	0	0	0	0
Undecane	0	0	0	0	0
Benzene	0	230.42	10.3622	10.3622	10.3832
Toluene	0	143.133	5.65325	5.65325	5.66843
Ethylbenzene	0	68.428	1.83066	1.83066	1.83995
m-Xylene	0	46.0087	1.76092	1.76092	1.77362
Water	99929.5	990.995	98953.1	98953.1	98938.5
MDEA	89964.6	5.47668	89959.3	89959.3	89959.2
Piperazine	9996.07	6.53327	9989.67	9989.67	9989.54
TEG	0	0	0	0	0

Stream Properties

Property	Units	15	16	18	19	20
Temperature	°F	131.89	150.215	142.385	142.385	139.042
Pressure	psia	1054.7	956.696	79.6959 *	79.6959 *	958.696
Mole Fraction Vapor	%	0	100	0.164687	0.164687	0
Mole Fraction Light Liquid	%	100	0	99.8353	99.8353	100
Mole Fraction Heavy Liquid	%	0	0	0	0	0
Molecular Weight	lb/lbmol	31.1469	21.0845	31.8591	31.8591	31.8607
Mass Density	lb/ft^3	63.9246	3.55867	53.9018	53.9018	69.3027
Molar Flow	lbmol/h	6418.67	13220.3	6699.08	6699.08	6698.26
Mass Flow	lb/h	199921	278743	213427	213427	213412
Vapor Volumetric Flow	ft^3/h	3127.46	78327.8	3959.55	3959.55	3079.41
Liquid Volumetric Flow	gpm	389.917	9765.54	493.658	493.658	383.927
Std Vapor Volumetric Flow	MMSCFD	58.4588	120.405	61.0127	61.0127	61.0052
Std Liquid Volumetric Flow	sgpm	400	1596.39	434.217	434.217	434.185
Specific Gravity		1.02495	0.727994			1.11118
API Gravity		3.7923				-5.52567
Net Ideal Gas Heating Value	Btu/ft^3	478.514	1139.55	460.317	460.317	460.371
Net Liquid Heating Value	Btu/lb	5133.88	20445.4	4830.63	4830.63	4831.02
Gross Ideal Gas Heating Value	Btu/ft^3	564.961	1256.14	542.92	542.92	542.978
Gross Liquid Heating Value	Btu/lb	6187.12	22544.2	5814.54	5814.54	5814.93

Remarks

ProMax 6.0.22251.0
Copyright © 2002-2022 BRE Group, Ltd.
Licensed to Trinity Consultants, Inc. and Affiliates

Process Streams Report
All Streams
Tabulated by Total Phase

Client Name:	Targa Resources	Job:
Location:	Roadrunner Gas Processing Plant	
Flowsheet:	2 - Amine	

Connections

	21	22	23	24	25
From Block	LCV-1203	MXSP-100	Filtration	Filtration	E-2201/2202
To Block	MXSP-100	V-2401	--	E-2201/2202	LCV-2401

Stream Composition

Mole Fraction	21 %	22 %	23 %	24 %	25 %
H2S	6.3804E-05	0.00116349	0.00248372	0.00116169	0.00116169
CO2	0.0201722	4.83476	11.8898	4.82496	4.82496
N2	0.000712945	0.000643164	0.285075	1.14886E-05	1.14886E-05
Methane	0.0738877	0.121949	66.109	0.00933202	0.00933202
Ethane	0.0086635	0.0227602	12.2262	0.00291731	0.00291731
Propane	0.00244934	0.00721017	3.89823	0.000778868	0.000778868
i-Butane	0.000175428	0.000633463	0.34253	5.40226E-05	5.40226E-05
n-Butane	0.00056638	0.00202935	1.08821	0.000253339	0.000253339
i-Pentane	4.71055E-05	0.000191731	0.102486	1.26005E-05	1.26005E-05
n-Pentane	6.31237E-05	0.000259951	0.140292	2.20299E-05	2.20299E-05
n-Hexane	1.77972E-05	0.000112955	0.0604754	7.86879E-06	7.86879E-06
n-Heptane	4.42774E-06	2.7755E-05	0.0139067	9.99331E-07	9.99331E-07
n-Octane	4.8201E-07	3.90885E-06	0.00200267	1.68602E-07	1.68602E-07
n-Nonane	0	0	0	0	0
n-Decane	0	0	0	0	0
Undecane	0	0	0	0	0
Benzene	0.000499312	0.00197862	0.0910173	0.00184413	0.00184413
Toluene	0.000154623	0.000915242	0.0392915	0.000857192	0.000857192
Ethylbenzene	3.85532E-05	0.000257515	0.0121768	0.000239438	0.000239438
m-Xylene	3.77431E-05	0.00024797	0.00851025	0.000235454	0.000235454
Water	99.2438	82.0349	3.68789	82.1658	82.1658
MDEA	0.262332	11.242	0.000371467	11.2607	11.2607
Piperazine	0.386333	1.72792	2.28397E-05	1.73079	1.73079
TEG	0	0	0	0	0

Mass Fraction	21 %	22 %	23 %	24 %	25 %
H2S	0.000117222	0.00124592	0.00365122	0.00124341	0.00124341
CO2	0.0478577	6.68554	22.5707	6.66884	6.66884
N2	0.00107665	0.000566112	0.344469	1.01075E-05	1.01075E-05
Methane	0.063899	0.0614702	45.7464	0.00470172	0.00470172
Ethane	0.0140432	0.0215035	15.8575	0.00275494	0.00275494
Propane	0.00582232	0.00998977	7.41461	0.00107862	0.00107862
i-Butane	0.000549657	0.00115685	0.858748	9.86116E-05	9.86116E-05
n-Butane	0.0017746	0.00370607	2.72821	0.000462439	0.000462439
i-Pentane	0.000183211	0.000434647	0.318947	2.85514E-05	2.85514E-05
n-Pentane	0.000245512	0.000589297	0.436604	4.99174E-05	4.99174E-05
n-Hexane	8.26775E-05	0.000305846	0.224795	2.12961E-05	2.12961E-05
n-Heptane	2.39172E-05	8.73839E-05	0.0601071	3.14482E-06	3.14482E-06
n-Octane	2.96812E-06	1.40294E-05	0.00986755	6.04851E-07	6.04851E-07
n-Nonane	0	0	0	0	0
n-Decane	0	0	0	0	0
Undecane	0	0	0	0	0
Benzene	0.00210252	0.00485617	0.306666	0.00452396	0.00452396
Toluene	0.000768007	0.00264967	0.156158	0.00248044	0.00248044
Ethylbenzene	0.000220645	0.00085901	0.0557623	0.000798334	0.000798334
m-Xylene	0.000216008	0.00082717	0.0389716	0.000785049	0.000785049
Water	96.382	46.436	2.86579	46.4882	46.4882
MDEA	1.68516	42.0917	0.00190934	42.1419	42.1419
Piperazine	1.79389	4.67649	8.4859E-05	4.68206	4.68206
TEG	0	0	0	0	0

Copyright © 2002-2022 BRE Group, Ltd.
Licensed to Trinity Consultants, Inc. and Affiliates

Process Streams Report
All Streams
Tabulated by Total Phase

Client Name:	Targa Resources	Job:
Location:	Roadrunner Gas Processing Plant	
Flowsheet:	2 - Amine	

Mass Flow	21 lb/h	22 lb/h	23 lb/h	24 lb/h	25 lb/h
H2S	0.000733723	10.6518	0.000446161	10.6177	10.6177
CO2	0.299554	57157.2	2.75804	56946.6	56946.6
N2	0.00673901	4.8399	0.0420924	0.0863098	0.0863098
Methane	0.39996	525.532	5.58999	40.149	40.149
Ethane	0.0878996	183.842	1.93771	23.525	23.525
Propane	0.0364434	85.4063	0.906029	9.21058	9.21058
i-Butane	0.00344044	9.89037	0.104935	0.842065	0.842065
n-Butane	0.0111077	31.6846	0.333374	3.94886	3.94886
i-Pentane	0.00114677	3.71596	0.0389738	0.243806	0.243806
n-Pentane	0.00153672	5.03813	0.053351	0.426255	0.426255
n-Hexane	0.000517499	2.6148	0.0274689	0.181852	0.181852
n-Heptane	0.000149704	0.747078	0.00734479	0.0268543	0.0268543
n-Octane	1.85782E-05	0.119942	0.00120577	0.00516495	0.00516495
n-Nonane	0	0	0	0	0
n-Decane	0	0	0	0	0
Undecane	0	0	0	0	0
Benzene	0.0131602	41.5173	0.0374731	38.6311	38.6311
Toluene	0.00480715	22.653	0.0190818	21.181	21.181
Ethylbenzene	0.00138107	7.344	0.00681389	6.81713	6.81713
m-Xylene	0.00135205	7.07179	0.00476214	6.7037	6.7037
Water	603.279	396999	0.350186	396972	396972
MDEA	10.5478	359858	0.000233312	359858	359858
Piperazine	11.2284	39981.1	1.03694E-05	39981.1	39981.1
TEG	0	0	0	0	0

Stream Properties

Property	Units	21	22	23	24	25
Temperature	°F	132.605	142.019	142.042	142.042	210 *
Pressure	psia	79.6959 *	79.6959	71.6959	71.6959	68.6959
Mole Fraction Vapor	%	0.0802656	0.164061	100	0	0.585526
Mole Fraction Light Liquid	%	99.9197	99.8359	0	100	99.4145
Mole Fraction Heavy Liquid	%	0	0	0	0	0
Molecular Weight	lb/lbmol	18.5502	31.8262	23.1833	31.8412	31.8412
Mass Density	lb/ft^3	50.9735	53.9348	0.260586	69.2673	29.75
Molar Flow	lbmol/h	33.7422	26862.7	0.527083	26818.1	26818.1
Mass Flow	lb/h	625.925	854938	12.2195	853921	853921
Vapor Volumetric Flow	ft^3/h	12.2794	15851.3	46.8924	12327.9	28703.2
Liquid Volumetric Flow	gpm	1.53094	1976.27	5.84632	1536.98	3578.58
Std Vapor Volumetric Flow	MMSCFD	0.307311	244.655	0.00480047	244.249	244.249
Std Liquid Volumetric Flow	sgpm	1.26153	1739.35	0.0613327	1734.16	1734.16
Specific Gravity				0.800459	1.11061	
API Gravity					-5.54121	
Net Ideal Gas Heating Value	Btu/ft^3	22.6062	459.236	950.902	458.401	458.401
Net Liquid Heating Value	Btu/lb	-569.287	4822.86	15473.4	4809.66	4809.66
Gross Ideal Gas Heating Value	Btu/ft^3	74.4595	541.763	1050.41	540.898	540.898
Gross Liquid Heating Value	Btu/lb	491.483	5806.88	17102.5	5792.86	5792.86

Remarks

ProMax 6.0.22251.0
Copyright © 2002-2022 BRE Group, Ltd.
Licensed to Trinity Consultants, Inc. and Affiliates

Process Streams Report
All Streams
Tabulated by Total Phase

Client Name:	Targa Resources	Job:
Location:	Roadrunner Gas Processing Plant	
Flowsheet:	2 - Amine	

Connections

	26	27	28	29	30
From Block	E-2203	T-2501	T-2501	V-2402	LCV-2401
To Block	T-2501	E-2203	FAXR-100	T-2501	T-2501

Stream Composition

Mole Fraction	26 %	27 %	28 %	29 %	30 %
H2S	0.000116152	0.000143849	0.00993259	6.11484E-05	0.00116169
CO2	0.0371543	0.0158722	46.8313	0.12136	4.82496
N2	0	0	0.000111609	3.6278E-09	1.14886E-05
Methane	0	0	0.0906596	5.69546E-06	0.00933202
Ethane	0	0	0.0283415	1.98601E-06	0.00291731
Propane	0	0	0.00756659	4.06998E-07	0.000778868
i-Butane	0	0	0.000524817	1.77948E-08	5.40226E-05
n-Butane	0	0	0.00246115	1.25731E-07	0.000253339
i-Pentane	0	0	0.00012241	3.15305E-09	1.26005E-05
n-Pentane	0	0	0.000214015	6.80505E-09	2.20299E-05
n-Hexane	0	0	7.64428E-05	1.37509E-09	7.86879E-06
n-Heptane	0	0	9.70815E-06	1.00777E-10	9.99331E-07
n-Octane	0	0	1.63791E-06	1.46007E-11	1.68602E-07
n-Nonane	0	0	0	0	0
n-Decane	0	0	0	0	0
Undecane	0	0	0	0	0
Benzene	0	0	0.017958	8.65951E-05	0.00184413
Toluene	0	0	0.00834232	3.02671E-05	0.000857192
Ethylbenzene	0	0	0.00232946	6.88284E-06	0.000239438
m-Xylene	0	0	0.00229238	1.01388E-05	0.000235454
Water	99.7903	88.7927	52.9662	99.815	82.1658
MDEA	0.0709779	9.68574	0.0212946	0.0428463	11.2607
Piperazine	0.101474	1.50552	0.0102279	0.0205792	1.73079
TEG	0	0	0	0	0

Mass Fraction	26 %	27 %	28 %	29 %	30 %
H2S	0.000217913	0.000169979	0.0111923	0.00011511	0.00124341
CO2	0.0900118	0.0242193	68.1444	0.295013	6.66884
N2	0	0	0.000103374	5.61342E-09	1.01075E-05
Methane	0	0	0.0480875	5.04682E-06	0.00470172
Ethane	0	0	0.0281767	3.29853E-06	0.00275494
Propane	0	0	0.0110317	9.91303E-07	0.00107862
i-Butane	0	0	0.00100855	5.71285E-08	9.86116E-05
n-Butane	0	0	0.00472964	4.03649E-07	0.000462439
i-Pentane	0	0	0.000292008	1.25655E-08	2.85514E-05
n-Pentane	0	0	0.00051053	2.71193E-08	4.99174E-05
n-Hexane	0	0	0.000217805	6.54535E-09	2.12961E-05
n-Heptane	0	0	3.21633E-05	5.57773E-10	3.14482E-06
n-Octane	0	0	6.18604E-06	9.21231E-11	6.04851E-07
n-Nonane	0	0	0	0	0
n-Decane	0	0	0	0	0
Undecane	0	0	0	0	0
Benzene	0	0	0.0463792	0.000373619	0.00452396
Toluene	0	0	0.0254141	0.000154039	0.00248044
Ethylbenzene	0	0	0.00817683	4.03616E-05	0.000798334
m-Xylene	0	0	0.00804665	5.9455E-05	0.000785049
Water	98.963	55.462	31.5492	99.3243	46.4882
MDEA	0.465592	40.0174	0.0838989	0.282014	42.1419
Piperazine	0.48115	4.4962	0.0291284	0.0979109	4.68206
TEG	0	0	0	0	0

Copyright © 2002-2022 BRE Group, Ltd.
Licensed to Trinity Consultants, Inc. and Affiliates

Process Streams Report
All Streams
Tabulated by Total Phase

Client Name:	Targa Resources	Job:
Location:	Roadrunner Gas Processing Plant	
Flowsheet:	2 - Amine	

Mass Flow	26 lb/h	27 lb/h	28 lb/h	29 lb/h	30 lb/h
H2S	0.229274	1.53063	9.34493	0.0285927	10.6177
CO2	94.7044	218.09	56896.5	73.2794	56946.6
N2	0	0	0.0863112	1.39434E-06	0.0863098
Methane	0	0	40.1502	0.0012536	40.149
Ethane	0	0	23.5259	0.000819334	23.525
Propane	0	0	9.21082	0.000246233	9.21058
i-Butane	0	0	0.842079	1.41904E-05	0.842065
n-Butane	0	0	3.94896	0.000100264	3.94886
i-Pentane	0	0	0.243809	3.12119E-06	0.243806
n-Pentane	0	0	0.426262	6.73627E-06	0.426255
n-Hexane	0	0	0.181854	1.62582E-06	0.181852
n-Heptane	0	0	0.0268544	1.38547E-07	0.0268543
n-Octane	0	0	0.00516497	2.28828E-08	0.00516495
n-Nonane	0	0	0	0	0
n-Decane	0	0	0	0	0
Undecane	0	0	0	0	0
Benzene	0	0	38.7239	0.0928046	38.6311
Toluene	0	0	21.2193	0.0382622	21.181
Ethylbenzene	0	0	6.82716	0.0100256	6.81713
m-Xylene	0	0	6.71847	0.0147682	6.7037
Water	104122	499424	26341.7	24671.5	396972
MDEA	489.865	360348	70.0505	70.0505	359858
Piperazine	506.234	40487.4	24.3205	24.3204	39981.1
TEG	0	0	0	0	0

Stream Properties

Property	Units	26	27	28	29	30
Temperature	°F	255.831	254.326	216.248	120	194.556
Pressure	psia	28.6959	28.6959	26.6959	25.6959	26.6959 *
Mole Fraction Vapor	%	100	0	100	0	2.16629
Mole Fraction Light Liquid	%	0	100	0	100	97.8337
Mole Fraction Heavy Liquid	%	0	0	0	0	0
Molecular Weight	lb/lbmol	18.1659	28.8418	30.2449	18.1043	31.8412
Mass Density	lb/ft^3	0.0688818	60.2759	0.11229	61.7333	5.20446
Molar Flow	lbmol/h	5791.81	31221.3	2760.6	1372.02	26818.1
Mass Flow	lb/h	105213	900479	83494	24839.4	853921
Vapor Volumetric Flow	ft^3/h	1.52745E+06	14939.3	743559	402.366	164075
Liquid Volumetric Flow	gpm	190435	1862.56	92703.5	50.1651	20456.1
Std Vapor Volumetric Flow	MMSCFD	52.7496	284.352	25.1425	12.4958	244.249
Std Liquid Volumetric Flow	sgpm	210.724	1801.89	192.695	49.7016	1734.16
Specific Gravity		0.62722	0.966445	1.04428	0.989812	
API Gravity			4.43073		9.84819	
Net Ideal Gas Heating Value	Btu/ft^3	5.76968	394.57	3.94019	2.19401	458.401
Net Liquid Heating Value	Btu/lb	-931.105	4455.58	-336.531	-1008.04	4809.66
Gross Ideal Gas Heating Value	Btu/ft^3	56.4611	474.667	30.9013	52.6029	540.898
Gross Liquid Heating Value	Btu/lb	127.836	5509.46	1.75093	48.5804	5792.86

Remarks

ProMax 6.0.22251.0
Copyright © 2002-2022 BRE Group, Ltd.
Licensed to Trinity Consultants, Inc. and Affiliates

Process Streams Report
All Streams
Tabulated by Total Phase

Client Name:	Targa Resources	Job:
Location:	Roadrunner Gas Processing Plant	
Flowsheet:	2 - Amine	

Connections

	31	32	33	34	35
From Block	E-2203	E-2201/2202	V-2402	P-2600/2601	RCYL-1
To Block	E-2201/2202	P-2600/2601	PCV-2402A	RCYL-1	MKUP-1

Stream Composition

Mole Fraction	31 %	32 %	33 %	34 %	35 %
H2S	0.000150158	0.000150158	0.0196863	0.000150158	0.000150454
CO2	0.011025	0.011025	92.984	0.011025	0.0110247
N2	0	0	0.000221883	0	0
Methane	0	0	0.180232	0	0
Ethane	0	0	0.056343	0	0
Propane	0	0	0.0150425	0	0
i-Butane	0	0	0.00104336	0	0
n-Butane	0	0	0.00489282	0	0
i-Pentane	0	0	0.000243357	0	0
n-Pentane	0	0	0.000425471	0	0
n-Hexane	0	0	0.000151972	0	0
n-Heptane	0	0	1.93004E-05	0	0
n-Octane	0	0	3.25627E-06	0	0
n-Nonane	0	0	0	0	0
n-Decane	0	0	0	0	0
Undecane	0	0	0	0	0
Benzene	0	0	0.0356163	0	0
Toluene	0	0	0.0165552	0	0
Ethylbenzene	0	0	0.00462434	0	0
m-Xylene	0	0	0.00454739	0	0
Water	86.2879	86.2879	6.67633	86.2879	86.2879
MDEA	11.8756	11.8756	3.35603E-08	11.8756	11.8756
Piperazine	1.8253	1.8253	3.51131E-08	1.8253	1.82531
TEG	0	0	0	0	0

Mass Fraction	31 %	32 %	33 %	34 %	35 %
H2S	0.000163638	0.000163638	0.0158834	0.000163638	0.00016396
CO2	0.015515	0.015515	96.8776	0.015515	0.0155145
N2	0	0	0.000147149	0	0
Methane	0	0	0.0684498	0	0
Ethane	0	0	0.0401077	0	0
Propane	0	0	0.0157031	0	0
i-Butane	0	0	0.00143563	0	0
n-Butane	0	0	0.0067324	0	0
i-Pentane	0	0	0.000415664	0	0
n-Pentane	0	0	0.00072672	0	0
n-Hexane	0	0	0.000310039	0	0
n-Heptane	0	0	4.57837E-05	0	0
n-Octane	0	0	8.8057E-06	0	0
n-Nonane	0	0	0	0	0
n-Decane	0	0	0	0	0
Undecane	0	0	0	0	0
Benzene	0	0	0.0658619	0	0
Toluene	0	0	0.0361114	0	0
Ethylbenzene	0	0	0.0116225	0	0
m-Xylene	0	0	0.0114291	0	0
Water	49.7069	49.7069	2.8474	49.7069	49.7068
MDEA	45.2501	45.2501	9.46745E-08	45.2501	45.2502
Piperazine	5.02739	5.02739	7.16012E-08	5.02739	5.0274
TEG	0	0	0	0	0

Copyright © 2002-2022 BRE Group, Ltd.
Licensed to Trinity Consultants, Inc. and Affiliates

Process Streams Report
All Streams
Tabulated by Total Phase

Client Name:	Targa Resources	Job:
Location:	Roadrunner Gas Processing Plant	
Flowsheet:	2 - Amine	

Mass Flow	31 lb/h	32 lb/h	33 lb/h	34 lb/h	35 lb/h
H2S	1.30136	1.30136	9.31634	1.30136	1.30392
CO2	123.386	123.386	56823.2	123.386	123.381
N2	0	0	0.0863098	0	0
Methane	0	0	40.149	0	0
Ethane	0	0	23.525	0	0
Propane	0	0	9.21058	0	0
i-Butane	0	0	0.842065	0	0
n-Butane	0	0	3.94886	0	0
i-Pentane	0	0	0.243806	0	0
n-Pentane	0	0	0.426255	0	0
n-Hexane	0	0	0.181852	0	0
n-Heptane	0	0	0.0268543	0	0
n-Octane	0	0	0.00516495	0	0
n-Nonane	0	0	0	0	0
n-Decane	0	0	0	0	0
Undecane	0	0	0	0	0
Benzene	0	0	38.6311	0	0
Toluene	0	0	21.181	0	0
Ethylbenzene	0	0	6.81713	0	0
m-Xylene	0	0	6.7037	0	0
Water	395302	395302	1670.13	395302	395300
MDEA	359858	359858	5.5531E-05	359858	359858
Piperazine	39981.1	39981.1	4.19974E-05	39981.1	39981.1
TEG	0	0	0	0	0

Stream Properties

Property	Units	31	32	33	34	35
Temperature	°F	255.831	189.613	120	189.698	189.689
Pressure	psia	28.6959	25.6959	25.6959	64.6959 *	64.6959
Mole Fraction Vapor	%	0	0	100	0	0
Mole Fraction Light Liquid	%	100	100	0	100	100
Mole Fraction Heavy Liquid	%	0	0	0	0	0
Molecular Weight	lb/lbmol	31.2734	31.2734	42.2407	31.2734	31.2734
Mass Density	lb/ft^3	60.2968	62.3732	0.175901	62.3753	62.3756
Molar Flow	lbmol/h	25429.5	25429.5	1388.58	25429.5	25429.4
Mass Flow	lb/h	795266	795266	58654.6	795266	795264
Vapor Volumetric Flow	ft^3/h	13189.2	12750.1	333452	12749.7	12749.6
Liquid Volumetric Flow	gpm	1644.37	1589.63	41573.2	1589.57	1589.56
Std Vapor Volumetric Flow	MMSCFD	231.602	231.602	12.6467	231.602	231.601
Std Liquid Volumetric Flow	sgpm	1591.16	1591.16	142.993	1591.16	1591.16
Specific Gravity		0.966779	1.00007	1.45846	1.00011	1.00011
API Gravity		3.94905	3.94958		3.94272	3.94271
Net Ideal Gas Heating Value	Btu/ft^3	483.123	483.123	5.66555	483.123	483.125
Net Liquid Heating Value	Btu/lb	5168.24	5168.24	-52.1569	5168.24	5168.26
Gross Ideal Gas Heating Value	Btu/ft^3	569.917	569.917	9.45852	569.917	569.92
Gross Liquid Heating Value	Btu/lb	6221.44	6221.44	-18.0806	6221.44	6221.46

Remarks

ProMax 6.0.22251.0
Copyright © 2002-2022 BRE Group, Ltd.
Licensed to Trinity Consultants, Inc. and Affiliates

Process Streams Report
All Streams
Tabulated by Total Phase

Client Name:	Targa Resources	Job:
Location:	Roadrunner Gas Processing Plant	
Flowsheet:	2 - Amine	

Connections

	36	37	38	39	40
From Block	--	MKUP-1	MKUP-1	AC-2301 A/B	P-2604/5/6
To Block	MKUP-1	--	AC-2301 A/B	P-2604/5/6	SPLT-101

Stream Composition

Mole Fraction	36 %	37 %	38 %	39 %	40 %
H2S	0	0.000150454	0.000149017	0.000149017	0.000149017
CO2	0	0.0110247	0.0109194	0.0109194	0.0109194
N2	0	0	0	0	0
Methane	0	0	0	0	0
Ethane	0	0	0	0	0
Propane	0	0	0	0	0
i-Butane	0	0	0	0	0
n-Butane	0	0	0	0	0
i-Pentane	0	0	0	0	0
n-Pentane	0	0	0	0	0
n-Hexane	0	0	0	0	0
n-Heptane	0	0	0	0	0
n-Octane	0	0	0	0	0
n-Nonane	0	0	0	0	0
n-Decane	0	0	0	0	0
Undecane	0	0	0	0	0
Benzene	0	0	0	0	0
Toluene	0	0	0	0	0
Ethylbenzene	0	0	0	0	0
m-Xylene	0	0	0	0	0
Water	99.9844	86.2879	86.4187	86.4187	86.4187
MDEA	0.000603736	11.8756	11.7622	11.7622	11.7622
Piperazine	0.0149901	1.82531	1.80801	1.80801	1.80801
TEG	0	0	0	0	0

Mass Fraction	36 %	37 %	38 %	39 %	40 %
H2S	0	0.00016396	0.000163054	0.000163054	0.000163054
CO2	0	0.0155145	0.0154287	0.0154287	0.0154287
N2	0	0	0	0	0
Methane	0	0	0	0	0
Ethane	0	0	0	0	0
Propane	0	0	0	0	0
i-Butane	0	0	0	0	0
n-Butane	0	0	0	0	0
i-Pentane	0	0	0	0	0
n-Pentane	0	0	0	0	0
n-Hexane	0	0	0	0	0
n-Heptane	0	0	0	0	0
n-Octane	0	0	0	0	0
n-Nonane	0	0	0	0	0
n-Decane	0	0	0	0	0
Undecane	0	0	0	0	0
Benzene	0	0	0	0	0
Toluene	0	0	0	0	0
Ethylbenzene	0	0	0	0	0
m-Xylene	0	0	0	0	0
Water	99.9244	49.7068	49.9844	49.9844	49.9844
MDEA	0.00399102	45.2502	45	45	45
Piperazine	0.0716285	5.0274	5	5	5
TEG	0	0	0	0	0

Copyright © 2002-2022 BRE Group, Ltd.
Licensed to Trinity Consultants, Inc. and Affiliates

Process Streams Report
All Streams
Tabulated by Total Phase

Client Name:	Targa Resources	Job:
Location:	Roadrunner Gas Processing Plant	
Flowsheet:	2 - Amine	

Mass Flow	36 lb/h	37 lb/h	38 lb/h	39 lb/h	40 lb/h
H2S	0	0	1.30392	1.30392	1.30392
CO2	0	0	123.381	123.381	123.381
N2	0	0	0	0	0
Methane	0	0	0	0	0
Ethane	0	0	0	0	0
Propane	0	0	0	0	0
i-Butane	0	0	0	0	0
n-Butane	0	0	0	0	0
i-Pentane	0	0	0	0	0
n-Pentane	0	0	0	0	0
n-Hexane	0	0	0	0	0
n-Heptane	0	0	0	0	0
n-Octane	0	0	0	0	0
n-Nonane	0	0	0	0	0
n-Decane	0	0	0	0	0
Undecane	0	0	0	0	0
Benzene	0	0	0	0	0
Toluene	0	0	0	0	0
Ethylbenzene	0	0	0	0	0
m-Xylene	0	0	0	0	0
Water	4418.14	0	399718	399718	399718
MDEA	0.176462	0	359859	359859	359859
Piperazine	3.16704	0	39984.3	39984.3	39984.3
TEG	0	0	0	0	0

Stream Properties

Property	Units	36	37	38	39	40
Temperature	°F	120 *		189.262	130 *	131.89
Pressure	psia	134.696 *	64.6959	64.6959	59.6959	1054.7 *
Mole Fraction Vapor	%	0		0	0	0
Mole Fraction Light Liquid	%	100		100	100	100
Mole Fraction Heavy Liquid	%	0		0	0	0
Molecular Weight	lb/lbmol	18.0261	31.2734	31.1469	31.1469	31.1469
Mass Density	lb/ft^3	61.6845		62.3823	63.868	63.9246
Molar Flow	lbmol/h	245.282	0	25674.7	25674.7	25674.7
Mass Flow	lb/h	4421.48	0	799686	799686	799686
Vapor Volumetric Flow	ft^3/h	71.679	0	12819.1	12520.9	12509.8
Liquid Volumetric Flow	gpm	8.9366	0	1598.23	1561.05	1559.67
Std Vapor Volumetric Flow	MMSCFD	2.23393	0	233.835	233.835	233.835
Std Liquid Volumetric Flow	sgpm	8.8413	0	1600 *	1600	1600
Specific Gravity		0.989029		1.00022	1.02404	1.02495
API Gravity		9.97582		3.9648	3.96568	3.7923
Net Ideal Gas Heating Value	Btu/ft^3	0.498548	483.125	478.514	478.514	478.514
Net Liquid Heating Value	Btu/lb	-1048.65	5168.26	5133.88	5133.88	5133.88
Gross Ideal Gas Heating Value	Btu/ft^3	50.8403	569.92	564.961	564.961	564.961
Gross Liquid Heating Value	Btu/lb	11.1371	6221.46	6187.12	6187.12	6187.12

Remarks

ProMax 6.0.22251.0
Copyright © 2002-2022 BRE Group, Ltd.
Licensed to Trinity Consultants, Inc. and Affiliates

Process Streams Report
All Streams
Tabulated by Total Phase

Client Name:	Targa Resources	Job:
Location:	Roadrunner Gas Processing Plant	
Flowsheet:	2 - Amine	

Connections

	41	42	43	44	45
From Block	T-701B	E-1102	E-1101	LCV-701A	LCV-701B
To Block	LCV-701B	T-1202	T-1201	MXSP-100	MXSP-100

Stream Composition

Mole Fraction	41 %	42 %	43 %	44 %	45 %
H2S	0.00116634	0.000508331	0.000508331	0.00116634	0.00116634
CO2	4.84724	2.39998	2.39998	4.84724	4.84724
N2	0.000643466	1.19343	1.19343	0.000643466	0.000643466
Methane	0.122034	76.4112	76.4112	0.122034	0.122034
Ethane	0.0227942	11.1772	11.1772	0.0227942	0.0227942
Propane	0.00721761	5.30026	5.30026	0.00721761	0.00721761
i-Butane	0.000633685	0.721309	0.721309	0.000633685	0.000633685
n-Butane	0.00203106	1.60472	1.60472	0.00203106	0.00203106
i-Pentane	0.000192294	0.361554	0.361554	0.000192294	0.000192294
n-Pentane	0.000260563	0.380031	0.380031	0.000260563	0.000260563
n-Hexane	0.000113169	0.249162	0.249162	0.000113169	0.000113169
n-Heptane	2.78154E-05	0.136789	0.136789	2.78154E-05	2.78154E-05
n-Octane	3.90855E-06	0.020788	0.020788	3.90855E-06	3.90855E-06
n-Nonane	0	0	0	0	0
n-Decane	0	0	0	0	0
Undecane	0	0	0	0	0
Benzene	0.0019845	0.0228358	0.0228358	0.0019845	0.0019845
Toluene	0.00091846	0.0119629	0.0119629	0.00091846	0.00091846
Ethylbenzene	0.00025874	0.00490284	0.00490284	0.00025874	0.00025874
m-Xylene	0.000249411	0.00333393	0.00333393	0.000249411	0.000249411
Water	81.9903	0	0	81.9903	81.9903
MDEA	11.2705	0	0	11.2705	11.2705
Piperazine	1.73141	0	0	1.73141	1.73141
TEG	0	0	0	0	0

Mass Fraction	41 %	42 %	43 %	44 %	45 %
H2S	0.00124761	0.000800308	0.000800308	0.00124761	0.00124761
CO2	6.69553	4.87926	4.87926	6.69553	6.69553
N2	0.000565765	1.5444	1.5444	0.000565765	0.000565765
Methane	0.0614465	56.6276	56.6276	0.0614465	0.0614465
Ethane	0.0215123	15.5257	15.5257	0.0215123	0.0215123
Propane	0.00998926	10.7967	10.7967	0.00998926	0.00998926
i-Butane	0.001156	1.9367	1.9367	0.001156	0.001156
n-Butane	0.00370517	4.30864	4.30864	0.00370517	0.00370517
i-Pentane	0.000435451	1.20504	1.20504	0.000435451	0.000435451
n-Pentane	0.000590047	1.26662	1.26662	0.000590047	0.000590047
n-Hexane	0.000306095	0.991894	0.991894	0.000306095	0.000306095
n-Heptane	8.74794E-05	0.63318	0.63318	8.74794E-05	8.74794E-05
n-Octane	1.40131E-05	0.109695	0.109695	1.40131E-05	1.40131E-05
n-Nonane	0	0	0	0	0
n-Decane	0	0	0	0	0
Undecane	0	0	0	0	0
Benzene	0.00486534	0.0824011	0.0824011	0.00486534	0.00486534
Toluene	0.0026561	0.0509188	0.0509188	0.0026561	0.0026561
Ethylbenzene	0.000862163	0.0240452	0.0240452	0.000862163	0.000862163
m-Xylene	0.000831078	0.0163508	0.0163508	0.000831078	0.000831078
Water	46.3604	0	0	46.3604	46.3604
MDEA	42.1529	0	0	42.1529	42.1529
Piperazine	4.68088	0	0	4.68088	4.68088
TEG	0	0	0	0	0

Copyright © 2002-2022 BRE Group, Ltd.
Licensed to Trinity Consultants, Inc. and Affiliates

Process Streams Report
All Streams
Tabulated by Total Phase

Client Name:	Targa Resources	Job:	
Location:	Roadrunner Gas Processing Plant		
Flowsheet:	2 - Amine		

Mass Flow	41 lb/h	42 lb/h	43 lb/h	44 lb/h	45 lb/h
H2S	2.66255	2.33876	2.33876	2.66255	2.66255
CO2	14289	14258.8	14258.8	14289	14289
N2	1.20741	4513.26	4513.26	1.20741	1.20741
Methane	131.134	165484	165484	131.134	131.134
Ethane	45.9098	45371.3	45371.3	45.9098	45.9098
Propane	21.3182	31551.6	31551.6	21.3182	21.3182
i-Butane	2.46705	5659.69	5659.69	2.46705	2.46705
n-Butane	7.90727	12591.3	12591.3	7.90727	7.90727
i-Pentane	0.929304	3521.52	3521.52	0.929304	0.929304
n-Pentane	1.25923	3701.49	3701.49	1.25923	1.25923
n-Hexane	0.653242	2898.64	2898.64	0.653242	0.653242
n-Heptane	0.186691	1850.36	1850.36	0.186691	0.186691
n-Octane	0.0299056	320.565	320.565	0.0299056	0.0299056
n-Nonane	0	0	0	0	0
n-Decane	0	0	0	0	0
Undecane	0	0	0	0	0
Benzene	10.3832	240.803	240.803	10.3832	10.3832
Toluene	5.66843	148.801	148.801	5.66843	5.66843
Ethylbenzene	1.83995	70.268	70.268	1.83995	1.83995
m-Xylene	1.77362	47.7823	47.7823	1.77362	1.77362
Water	98938.5	0	0	98938.5	98938.5
MDEA	89959.2	0	0	89959.2	89959.2
Piperazine	9989.54	0	0	9989.54	9989.54
TEG	0	0	0	0	0

Stream Properties

Property	Units	41	42	43	44	45
Temperature	°F	139.042	110 *	110 *	141.675	141.675
Pressure	psia	958.696	958.696	958.696	79.6959 *	79.6959 *
Mole Fraction Vapor	%	0	100	100	0.163923	0.163923
Mole Fraction Light Liquid	%	100	0	0	99.8361	99.8361
Mole Fraction Heavy Liquid	%	0	0	0	0	0
Molecular Weight	lb/lbmol	31.8607	21.6471	21.6471	31.8607	31.8607
Mass Density	lb/ft^3	69.3027	4.13153	4.13153	53.979	53.979
Molar Flow	lbmol/h	6698.26	13499.8	13499.8	6698.26	6698.26
Mass Flow	lb/h	213412	292233	292233	213412	213412
Vapor Volumetric Flow	ft^3/h	3079.41	70732.4	70732.4	3953.6	3953.6
Liquid Volumetric Flow	gpm	383.927	8818.59	8818.59	492.917	492.917
Std Vapor Volumetric Flow	MMSCFD	61.0052	122.951	122.951	61.0052	61.0052
Std Liquid Volumetric Flow	sgpm	434.185	1630.58	1630.58	434.185	434.185
Specific Gravity		1.11118	0.747419	0.747419		
API Gravity		-5.52567				
Net Ideal Gas Heating Value	Btu/ft^3	460.371	1116.86	1116.86	460.371	460.371
Net Liquid Heating Value	Btu/lb	4831.02	19517.4	19517.4	4831.02	4831.02
Gross Ideal Gas Heating Value	Btu/ft^3	542.978	1230.92	1230.92	542.978	542.978
Gross Liquid Heating Value	Btu/lb	5814.93	21517.3	21517.3	5814.93	5814.93

Remarks

ProMax 6.0.22251.0
Copyright © 2002-2022 BRE Group, Ltd.
Licensed to Trinity Consultants, Inc. and Affiliates

Process Streams Report
All Streams
Tabulated by Total Phase

Client Name:	Targa Resources	Job:
Location:	Roadrunner Gas Processing Plant	
Flowsheet:	2 - Amine	

Connections

	46	47	48	49	50
From Block	E-701A	SPLT-101	SPLT-101	V-2401	V-2401
To Block	MIX-100	T-1201	T-1202	Filtration	--

Stream Composition

Mole Fraction	46 %	47 %	48 %	49 %	50 %
H2S	4.86451E-07	0.000149017	0.000149017	0.00116172	0.00224135
CO2	0.000105201	0.0109194	0.0109194	4.8251	10.7173
N2	1.21834	0	0	1.70911E-05	0.381627
Methane	77.9654	0	0	0.0106311	67.8623
Ethane	11.402	0	0	0.00315754	11.9515
Propane	5.40869	0	0	0.000855467	3.87423
i-Butane	0.736243	0	0	6.07535E-05	0.349144
n-Butane	1.63763	0	0	0.000274721	1.06977
i-Pentane	0.369103	0	0	1.46145E-05	0.107972
n-Pentane	0.387936	0	0	2.47867E-05	0.143364
n-Hexane	0.254374	0	0	9.05719E-06	0.0633378
n-Heptane	0.139668	0	0	1.27263E-06	0.016143
n-Octane	0.0212257	0	0	2.07959E-07	0.00225601
n-Nonane	0	0	0	0	0
n-Decane	0	0	0	0	0
Undecane	0	0	0	0	0
Benzene	0.0223133	0	0	0.00184588	0.0827528
Toluene	0.0117506	0	0	0.000857948	0.0357808
Ethylbenzene	0.00487543	0	0	0.000239673	0.011115
m-Xylene	0.00327807	0	0	0.000235616	0.00776535
Water	0.416093	86.4187	86.4187	82.1643	3.32101
MDEA	0.000347647	11.7622	11.7622	11.2605	0.00033838
Piperazine	0.000573731	1.80801	1.80801	1.73076	2.07058E-05
TEG	0	0	0	0	0

Mass Fraction	46 %	47 %	48 %	49 %	50 %
H2S	7.86296E-07	0.000163054	0.000163054	0.00124344	0.003349
CO2	0.000219584	0.0154287	0.0154287	6.66907	20.679
N2	1.61872	0	0	1.50366E-05	0.468706
Methane	59.3211	0	0	0.00535627	47.7304
Ethane	16.2607	0	0	0.00298182	15.7557
Propane	11.3116	0	0	0.00118471	7.48991
i-Butane	2.02955	0	0	0.000110899	0.889697
n-Butane	4.51433	0	0	0.000501473	2.72602
i-Pentane	1.26303	0	0	3.3115E-05	0.341537
n-Pentane	1.32747	0	0	5.61644E-05	0.453487
n-Hexane	1.03966	0	0	2.45126E-05	0.2393
n-Heptane	0.663757	0	0	4.00489E-06	0.070918
n-Octane	0.114993	0	0	7.46044E-07	0.0112983
n-Nonane	0	0	0	0	0
n-Decane	0	0	0	0	0
Undecane	0	0	0	0	0
Benzene	0.082664	0	0	0.00452829	0.283397
Toluene	0.0513495	0	0	0.00248264	0.144539
Ethylbenzene	0.0245488	0	0	0.00079912	0.0517354
m-Xylene	0.0165058	0	0	0.000785596	0.0361441
Water	0.355523	49.9844	49.9844	46.4875	2.62305
MDEA	0.00196478	45	45	42.1413	0.00176782
Piperazine	0.00234384	5	5	4.682	7.81934E-05
TEG	0	0	0	0	0

Copyright © 2002-2022 BRE Group, Ltd.
Licensed to Trinity Consultants, Inc. and Affiliates

Process Streams Report
All Streams
Tabulated by Total Phase

Client Name:	Targa Resources	Job:
Location:	Roadrunner Gas Processing Plant	
Flowsheet:	2 - Amine	

Mass Flow	46 lb/h	47 lb/h	48 lb/h	49 lb/h	50 lb/h
H2S	0.00219174	0.32598	0.32598	10.6181	0.0336647
CO2	0.612074	30.8453	30.8453	56949.3	207.868
N2	4512.05	0	0	0.128402	4.7115
Methane	165353	0	0	45.7389	479.793
Ethane	45325.4	0	0	25.4627	158.379
Propane	31530.3	0	0	10.1166	75.2897
i-Butane	5657.22	0	0	0.946999	8.94337
n-Butane	12583.4	0	0	4.28224	27.4023
i-Pentane	3520.59	0	0	0.28278	3.43318
n-Pentane	3700.23	0	0	0.479606	4.55852
n-Hexane	2897.99	0	0	0.209321	2.40548
n-Heptane	1850.17	0	0	0.0341991	0.712879
n-Octane	320.536	0	0	0.00637072	0.113572
n-Nonane	0	0	0	0	0
n-Decane	0	0	0	0	0
Undecane	0	0	0	0	0
Benzene	230.42	0	0	38.6685	2.84875
Toluene	143.133	0	0	21.2001	1.45293
Ethylbenzene	68.428	0	0	6.82395	0.520052
m-Xylene	46.0087	0	0	6.70846	0.363327
Water	990.995	99929.5	99929.5	396972	26.3673
MDEA	5.47668	89964.6	89964.6	359858	0.0177704
Piperazine	6.53327	9996.07	9996.07	39981.1	0.000786012
TEG	0	0	0	0	0

Stream Properties

Property	Units	46	47	48	49	50
Temperature	°F	131.149	131.89	131.89	142.019	142.019
Pressure	psia	954.696	1054.7	1054.7	79.6959	79.6959
Mole Fraction Vapor	%	99.8707	0	0	0	100
Mole Fraction Light Liquid	%	0.12935	100	100	100	0
Mole Fraction Heavy Liquid	%	0	0	0	0	0
Molecular Weight	lb/lbmol	21.0845	31.1469	31.1469	31.8411	22.8089
Mass Density	lb/ft^3	3.74967	63.9246	63.9246	69.2672	0.285311
Molar Flow	lbmol/h	13220.3	6418.67	6418.67	26818.6	44.0712
Mass Flow	lb/h	278743	199921	199921	853933	1005.22
Vapor Volumetric Flow	ft^3/h	74337.9	3127.46	3127.46	12328.1	3523.22
Liquid Volumetric Flow	gpm	9268.1	389.917	389.917	1537.01	439.259
Std Vapor Volumetric Flow	MMSCFD	120.405	58.4588	58.4588	244.254	0.401383
Std Liquid Volumetric Flow	sgpm	1596.39	400	400	1734.22	5.12944
Specific Gravity			1.02495	1.02495	1.11061	0.787532
API Gravity			3.7923	3.7923	-5.54047	
Net Ideal Gas Heating Value	Btu/ft^3	1139.55	478.514	478.514	458.411	961.52
Net Liquid Heating Value	Btu/lb	20445.4	5133.88	5133.88	4809.81	15909.5
Gross Ideal Gas Heating Value	Btu/ft^3	1256.14	564.961	564.961	540.908	1062.13
Gross Liquid Heating Value	Btu/lb	22544.2	6187.12	6187.12	5793.02	17583.8

Remarks

ProMax 6.0.22251.0
Copyright © 2002-2022 BRE Group, Ltd.
Licensed to Trinity Consultants, Inc. and Affiliates

Process Streams Report
All Streams
Tabulated by Total Phase

Client Name:	Targa Resources	Job:
Location:	Roadrunner Gas Processing Plant	
Flowsheet:	2 - Amine	

Connections

	51	52	53	55	56
From Block	T-1201	E-1102	E-1101	E-701B	E-701B
To Block	E-1101	MIX-103	MIX-103	MIX-100	T-701B

Stream Composition

Mole Fraction	51 %	52 %	53 %	55 %	56 %
H2S	4.63348E-07	4.63348E-07	4.63348E-07	4.86451E-07	0.000508331
CO2	6.97111E-05	6.97111E-05	6.97111E-05	0.000105201	2.39998
N2	1.21842	1.21842	1.21842	1.21834	1.19343
Methane	77.9702	77.9702	77.9702	77.9654	76.4112
Ethane	11.4027	11.4027	11.4027	11.402	11.1772
Propane	5.40902	5.40902	5.40902	5.40869	5.30026
i-Butane	0.736288	0.736288	0.736288	0.736243	0.721309
n-Butane	1.63773	1.63773	1.63773	1.63763	1.60472
i-Pentane	0.369126	0.369126	0.369126	0.369103	0.361554
n-Pentane	0.38796	0.38796	0.38796	0.387936	0.380031
n-Hexane	0.25439	0.25439	0.25439	0.254374	0.249162
n-Heptane	0.139677	0.139677	0.139677	0.139668	0.136789
n-Octane	0.021227	0.021227	0.021227	0.0212257	0.020788
n-Nonane	0	0	0	0	0
n-Decane	0	0	0	0	0
Undecane	0	0	0	0	0
Benzene	0.0223167	0.0223167	0.0223167	0.0223133	0.0228358
Toluene	0.0117526	0.0117526	0.0117526	0.0117506	0.0119629
Ethylbenzene	0.0048764	0.0048764	0.0048764	0.00487543	0.00490284
m-Xylene	0.00327918	0.00327918	0.00327918	0.00327807	0.00333393
Water	0.410005	0.410005	0.410005	0.416093	0
MDEA	0.000337871	0.000337871	0.000337871	0.000347647	0
Piperazine	0.000562392	0.000562392	0.000562392	0.000573731	0
TEG	0	0	0	0	0

Mass Fraction	51 %	52 %	53 %	55 %	56 %
H2S	7.48946E-07	7.48946E-07	7.48946E-07	7.86296E-07	0.000800308
CO2	0.000145506	0.000145506	0.000145506	0.000219584	4.87926
N2	1.6188	1.6188	1.6188	1.61872	1.5444
Methane	59.3243	59.3243	59.3243	59.3211	56.6276
Ethane	16.2615	16.2615	16.2615	16.2607	15.5257
Propane	11.3122	11.3122	11.3122	11.3116	10.7967
i-Butane	2.02966	2.02966	2.02966	2.02955	1.9367
n-Butane	4.51457	4.51457	4.51457	4.51433	4.30864
i-Pentane	1.2631	1.2631	1.2631	1.26303	1.20504
n-Pentane	1.32754	1.32754	1.32754	1.32747	1.26662
n-Hexane	1.03972	1.03972	1.03972	1.03966	0.991894
n-Heptane	0.663793	0.663793	0.663793	0.663757	0.63318
n-Octane	0.115	0.115	0.115	0.114993	0.109695
n-Nonane	0	0	0	0	0
n-Decane	0	0	0	0	0
Undecane	0	0	0	0	0
Benzene	0.082676	0.082676	0.082676	0.082664	0.0824011
Toluene	0.0513577	0.0513577	0.0513577	0.0513495	0.0509188
Ethylbenzene	0.0245535	0.0245535	0.0245535	0.0245488	0.0240452
m-Xylene	0.0165112	0.0165112	0.0165112	0.0165058	0.0163508
Water	0.350318	0.350318	0.350318	0.355523	0
MDEA	0.00190951	0.00190951	0.00190951	0.00196478	0
Piperazine	0.0022975	0.0022975	0.0022975	0.00234384	0
TEG	0	0	0	0	0

Copyright © 2002-2022 BRE Group, Ltd.
Licensed to Trinity Consultants, Inc. and Affiliates

Process Streams Report
All Streams
Tabulated by Total Phase

Client Name:	Targa Resources	Job:
Location:	Roadrunner Gas Processing Plant	
Flowsheet:	2 - Amine	

Mass Flow	51 lb/h	52 lb/h	53 lb/h	55 lb/h	56 lb/h
H2S	0.00208752	0.00208752	0.00208752	0.00219174	2.33876
CO2	0.405566	0.405566	0.405566	0.612074	14258.8
N2	4512.05	4512.05	4512.05	4512.05	4513.26
Methane	165353	165353	165353	165353	165484
Ethane	45325.4	45325.4	45325.4	45325.4	45371.3
Propane	31530.2	31530.2	31530.2	31530.3	31551.6
i-Butane	5657.21	5657.21	5657.21	5657.22	5659.69
n-Butane	12583.4	12583.4	12583.4	12583.4	12591.3
i-Pentane	3520.59	3520.59	3520.59	3520.59	3521.52
n-Pentane	3700.23	3700.23	3700.23	3700.23	3701.49
n-Hexane	2897.99	2897.99	2897.99	2897.99	2898.64
n-Heptane	1850.17	1850.17	1850.17	1850.17	1850.36
n-Octane	320.535	320.535	320.535	320.536	320.565
n-Nonane	0	0	0	0	0
n-Decane	0	0	0	0	0
Undecane	0	0	0	0	0
Benzene	230.441	230.441	230.441	230.42	240.803
Toluene	143.148	143.148	143.148	143.133	148.801
Ethylbenzene	68.4373	68.4373	68.4373	68.428	70.268
m-Xylene	46.0214	46.0214	46.0214	46.0087	47.7823
Water	976.434	976.434	976.434	990.995	0
MDEA	5.32233	5.32233	5.32233	5.47668	0
Piperazine	6.40376	6.40376	6.40376	6.53327	0
TEG	0	0	0	0	0

Stream Properties

Property	Units	51	52	53	55	56
Temperature	°F	149.661	130.574	130.574	131.149	110 *
Pressure	psia	956.696	954.696	954.696	954.696	958.696
Mole Fraction Vapor	%	100	99.8725	99.8725	99.8707	100
Mole Fraction Light Liquid	%	0	0.127459	0.127459	0.12935	0
Mole Fraction Heavy Liquid	%	0	0	0	0	0
Molecular Weight	lb/lbmol	21.0847	21.0847	21.0847	21.0845	21.6471
Mass Density	lb/ft^3	3.564	3.75597	3.75597	3.74967	4.13153
Molar Flow	lbmol/h	13219.4	13219.4	13219.4	13220.3	13499.8
Mass Flow	lb/h	278728	278728	278728	278743	292233
Vapor Volumetric Flow	ft^3/h	78206.4	74209.3	74209.3	74337.9	70732.4
Liquid Volumetric Flow	gpm	9750.41	9252.07	9252.07	9268.1	8818.59
Std Vapor Volumetric Flow	MMSCFD	120.398	120.398	120.398	120.405	122.951
Std Liquid Volumetric Flow	sgpm	1596.36	1596.36	1596.36	1596.39	1630.58
Specific Gravity		0.727999				0.747419
API Gravity						
Net Ideal Gas Heating Value	Btu/ft^3	1139.62	1139.62	1139.62	1139.55	1116.86
Net Liquid Heating Value	Btu/lb	20446.5	20446.5	20446.5	20445.4	19517.4
Gross Ideal Gas Heating Value	Btu/ft^3	1256.22	1256.22	1256.22	1256.14	1230.92
Gross Liquid Heating Value	Btu/lb	22545.4	22545.4	22545.4	22544.2	21517.3

Remarks

ProMax 6.0.22251.0
Copyright © 2002-2022 BRE Group, Ltd.
Licensed to Trinity Consultants, Inc. and Affiliates

Process Streams Report
All Streams
Tabulated by Total Phase

Client Name:	Targa Resources	Job:
Location:	Roadrunner Gas Processing Plant	
Flowsheet:	2 - Amine	

Connections

	57	59	61	62	65
From Block	E-701A	V-0701	VLVE-102	MIX-100	FAXR-100
To Block	T-701A	VLVE-102	MXSP-100	V-0701	V-2402

Stream Composition

Mole Fraction	57 %	59 %	61 %	62 %	65 %
H2S	0.000508331	5.73521E-05	5.73521E-05	4.86451E-07	0.00993259
CO2	2.39998	0.0257593	0.0257593	0.000105201	46.8313
N2	1.19343	0.000711847	0.000711847	1.21834	0.000111609
Methane	76.4112	0.073762	0.073762	77.9654	0.0906596
Ethane	11.1772	0.0086433	0.0086433	11.402	0.0283415
Propane	5.30026	0.00244413	0.00244413	5.40869	0.00756659
i-Butane	0.721309	0.00017546	0.00017546	0.736243	0.000524817
n-Butane	1.60472	0.000566264	0.000566264	1.63763	0.00246115
i-Pentane	0.361554	4.70281E-05	4.70281E-05	0.369103	0.00012241
n-Pentane	0.380031	6.30688E-05	6.30688E-05	0.387936	0.000214015
n-Hexane	0.249162	1.77575E-05	1.77575E-05	0.254374	7.64428E-05
n-Heptane	0.136789	4.41842E-06	4.41842E-06	0.139668	9.70815E-06
n-Octane	0.020788	4.82796E-07	4.82796E-07	0.0212257	1.63791E-06
n-Nonane	0	0	0	0	0
n-Decane	0	0	0	0	0
Undecane	0	0	0	0	0
Benzene	0.0228358	0.000497163	0.000497163	0.0223133	0.017958
Toluene	0.0119629	0.000153816	0.000153816	0.0117506	0.00834232
Ethylbenzene	0.00490284	3.83846E-05	3.83846E-05	0.00487543	0.00232946
m-Xylene	0.00333393	3.75069E-05	3.75069E-05	0.00327807	0.00229238
Water	0	99.2317	99.2317	0.416093	52.9662
MDEA	0	0.265966	0.265966	0.000347647	0.0212946
Piperazine	0	0.389326	0.389326	0.000573731	0.0102279
TEG	0	0	0	0	0

Mass Fraction	57 %	59 %	61 %	62 %	65 %
H2S	0.000800308	0.000105328	0.000105328	7.86296E-07	0.0111923
CO2	4.87926	0.0610892	0.0610892	0.000219584	68.1444
N2	1.5444	0.00107457	0.00107457	1.61872	0.000103374
Methane	56.6276	0.0637657	0.0637657	59.3211	0.0480875
Ethane	15.5257	0.014005	0.014005	16.2607	0.0281767
Propane	10.7967	0.0058077	0.0058077	11.3116	0.0110317
i-Butane	1.9367	0.000549545	0.000549545	2.02955	0.00100855
n-Butane	4.30864	0.00177355	0.00177355	4.51433	0.00472964
i-Pentane	1.20504	0.000182839	0.000182839	1.26303	0.000292008
n-Pentane	1.26662	0.000245204	0.000245204	1.32747	0.00051053
n-Hexane	0.991894	8.2461E-05	8.2461E-05	1.03966	0.000217805
n-Heptane	0.63318	2.38576E-05	2.38576E-05	0.663757	3.21633E-05
n-Octane	0.109695	2.97182E-06	2.97182E-06	0.114993	6.18604E-06
n-Nonane	0	0	0	0	0
n-Decane	0	0	0	0	0
Undecane	0	0	0	0	0
Benzene	0.0824011	0.00209267	0.00209267	0.082664	0.0463792
Toluene	0.0509188	0.000763705	0.000763705	0.0513495	0.0254141
Ethylbenzene	0.0240452	0.000219595	0.000219595	0.0245488	0.00817683
m-Xylene	0.0163508	0.000214574	0.000214574	0.0165058	0.00804665
Water	0	96.3331	96.3331	0.355523	31.5492
MDEA	0	1.70784	1.70784	0.00196478	0.0838989
Piperazine	0	1.80709	1.80709	0.00234384	0.0291284
TEG	0	0	0	0	0

Copyright © 2002-2022 BRE Group, Ltd.
Licensed to Trinity Consultants, Inc. and Affiliates

Process Streams Report
All Streams
Tabulated by Total Phase

Client Name:	Targa Resources	Job:
Location:	Roadrunner Gas Processing Plant	
Flowsheet:	2 - Amine	

Mass Flow	57 lb/h	59 lb/h	61 lb/h	62 lb/h	65 lb/h
H2S	2.33876	0.000669346	0.000669346	0.00438349	9.34493
CO2	14258.8	0.388214	0.388214	1.22415	56896.5
N2	4513.26	0.00682878	0.00682878	9024.1	0.0863112
Methane	165484	0.405223	0.405223	330707	40.1502
Ethane	45371.3	0.089	0.089	90650.8	23.5259
Propane	31551.6	0.0369072	0.0369072	63060.5	9.21082
i-Butane	5659.69	0.00349229	0.00349229	11314.4	0.842079
n-Butane	12591.3	0.0112707	0.0112707	25166.7	3.94896
i-Pentane	3521.52	0.00116192	0.00116192	7041.19	0.243809
n-Pentane	3701.49	0.00155824	0.00155824	7400.46	0.426262
n-Hexane	2898.64	0.000524029	0.000524029	5795.97	0.181854
n-Heptane	1850.36	0.000151612	0.000151612	3700.35	0.0268544
n-Octane	320.565	1.88855E-05	1.88855E-05	641.071	0.00516497
n-Nonane	0	0	0	0	0
n-Decane	0	0	0	0	0
Undecane	0	0	0	0	0
Benzene	240.803	0.0132986	0.0132986	460.84	38.7239
Toluene	148.801	0.00485325	0.00485325	286.266	21.2193
Ethylbenzene	70.268	0.0013955	0.0013955	136.856	6.82716
m-Xylene	47.7823	0.00136359	0.00136359	92.0174	6.71847
Water	0	612.184	612.184	1981.99	26341.7
MDEA	0	10.8531	10.8531	10.9534	70.0505
Piperazine	0	11.4838	11.4838	13.0665	24.3205
TEG	0	0	0	0	0

Stream Properties

Property	Units	57	59	61	62	65
Temperature	°F	110 *	131.094	133.181	131.149	120 *
Pressure	psia	958.696	953.696	79.6959 *	954.696	25.6959
Mole Fraction Vapor	%	100	0	0.0801702	99.8707	50.3
Mole Fraction Light Liquid	%	0	100	99.9198	0.12935	49.7
Mole Fraction Heavy Liquid	%	0	0	0	0	0
Molecular Weight	lb/lbmol	21.6471	18.5574	18.5574	21.0845	30.2449
Mass Density	lb/ft^3	4.13153	61.6765	50.975	3.74967	0.250091
Molar Flow	lbmol/h	13499.8	34.2445	34.2445	26440.5	2760.6
Mass Flow	lb/h	292233	635.487	635.487	557485	83494
Vapor Volumetric Flow	ft^3/h	70732.4	10.3035	12.4666	148676	333854
Liquid Volumetric Flow	gpm	8818.59	1.2846	1.55428	18536.2	41623.4
Std Vapor Volumetric Flow	MMSCFD	122.951	0.311886	0.311886	240.81	25.1425
Std Liquid Volumetric Flow	sgpm	1630.58	1.28089	1.28089	3192.79	192.695
Specific Gravity		0.747419	0.988901			
API Gravity			9.56432			
Net Ideal Gas Heating Value	Btu/ft^3	1116.86	22.8298	22.8298	1139.55	3.94019
Net Liquid Heating Value	Btu/lb	19517.4	-564.496	-564.496	20445.4	-336.531
Gross Ideal Gas Heating Value	Btu/ft^3	1230.92	74.6962	74.6962	1256.14	30.9013
Gross Liquid Heating Value	Btu/lb	21517.3	496.133	496.133	22544.2	1.75093

Remarks

ProMax 6.0.22251.0
Copyright © 2002-2022 BRE Group, Ltd.
Licensed to Trinity Consultants, Inc. and Affiliates

RR1 TEG
Plant Schematic

Client Name:	Targa Resources	Job: Wildcat II
Location:	DOU	
Flowsheet:	RR1 TEG	

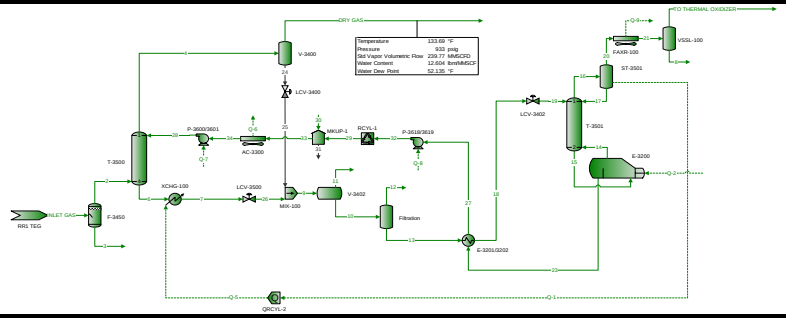

Copyright © 2002-2022 BRE Group, Ltd.
Licensed to Trinity Consultants, Inc. and Affiliates

Process Streams Report
All Streams
Tabulated by Total Phase

Client Name:	Targa Resources	Job: Wildcat II	
Location:	DOU		
Flowsheet:	RR1 TEG		

Connections

	DRY GAS	INLET GAS	TO THERMAL OXIDIZER	2	3
From Block	V-3400	RR1 TEG	VSSL-100	F-3450	F-3450
To Block	--	F-3450	--	T-3500	--

Stream Composition

Mole Fraction	DRY GAS %	INLET GAS %	TO THERMAL OXIDIZER %	2 %	3 %
H2S	1.4832E-07	1.49117E-07	1.0378E-05	1.49118E-07	6.52449E-09
CO2	3.16665E-05	3.16357E-05	0.000283443	3.16359E-05	5.06381E-07
N2	1.22353	1.21998	0.0139356	1.21998	0.000829385
Methane	78.2848	78.0701	12.8868	78.0704	0.0926207
Ethane	11.4444	11.4173	15.2207	11.4174	0.0126447
Propane	5.42694	5.41595	17.8045	5.41598	0.0033692
i-Butane	0.738641	0.737231	3.21889	0.737235	0.00020192
n-Butane	1.64218	1.63982	12.7036	1.63983	0.000758477
i-Pentane	0.369999	0.369599	3.90655	0.369601	7.72598E-05
n-Pentane	0.388734	0.388457	4.99662	0.388459	5.1921E-05
n-Hexane	0.254564	0.254716	4.64551	0.254717	1.67026E-05
n-Heptane	0.139556	0.139856	2.31986	0.139856	4.53843E-06
n-Octane	0.0211697	0.0212542	0.225724	0.0212543	2.83231E-07
n-Nonane	0	0	0	0	0
n-Decane	0	0	0	0	0
Undecane	0	0	0	0	0
Benzene	0.0209232	0.0223438	7.18822	0.0223439	0.000618555
Toluene	0.0106228	0.011767	2.93564	0.011767	0.000205323
Ethylbenzene	0.00428622	0.0048825	0.599179	0.00488252	4.77318E-05
m-Xylene	0.0028714	0.00328328	0.416859	0.00328329	2.58725E-05
Water	0.0265427	0.283341	10.9169	0.282903	98.6246
MDEA	2.81433E-07	3.06742E-06	0.000191778	3.06741E-06	5.81769E-06
Piperazine	3.07673E-05	7.04857E-05	3.8311E-06	6.48473E-05	1.2639
Phosphoric Acid	0	0	0	0	0
TEG	0.000178419	0	1.83142E-08	0	0
O2	0	0	0	0	0

Mass Fraction	DRY GAS %	INLET GAS %	TO THERMAL OXIDIZER %	2 %	3 %
H2S	2.3969E-07	2.40993E-07	7.34897E-06	2.40994E-07	1.17788E-08
CO2	6.60824E-05	6.60222E-05	0.000259187	6.60225E-05	1.18051E-06
N2	1.62525	1.62063	0.00811136	1.62064	0.00123074
Methane	59.5508	59.3911	4.29554	59.3914	0.0787088
Ethane	16.3174	16.2799	9.50942	16.2799	0.0201406
Propane	11.3472	11.325	16.3127	11.325	0.00786985
i-Butane	2.0357	2.03194	3.88731	2.03195	0.000621679
n-Butane	4.52587	4.51966	15.3416	4.51968	0.00233523
i-Pentane	1.26581	1.26452	5.8563	1.26452	0.000295276
n-Pentane	1.3299	1.32904	7.49043	1.32905	0.000198434
n-Hexane	1.04021	1.04089	8.31798	1.0409	7.62452E-05
n-Heptane	0.663077	0.664542	4.8299	0.664544	2.40894E-05
n-Octane	0.114664	0.115129	0.535739	0.11513	1.7138E-06
n-Nonane	0	0	0	0	0
n-Decane	0	0	0	0	0
Undecane	0	0	0	0	0
Benzene	0.077497	0.0827638	11.6665	0.0827641	0.00255941
Toluene	0.0464107	0.0514128	5.62011	0.051413	0.00100213
Ethylbenzene	0.0215772	0.0245804	1.32172	0.0245805	0.000268432
m-Xylene	0.0144549	0.0165293	0.919543	0.0165294	0.0001455
Water	0.0226738	0.242057	4.0864	0.241682	94.1176
MDEA	1.5902E-06	1.73332E-05	0.000474831	1.73331E-05	3.67226E-05

Copyright © 2002-2022 BRE Group, Ltd.
Licensed to Trinity Consultants, Inc. and Affiliates

Process Streams Report
All Streams
Tabulated by Total Phase

Client Name:	Targa Resources	Job: Wildcat II
Location:	DOU	
Flowsheet:	RR1 TEG	

Mass Fraction	DRY GAS %	INLET GAS %	TO THERMAL OXIDIZER %	2 %	3 %
Piperazine	0.000125664	0.000287905	6.85658E-06	0.000264875	5.76686
Phosphoric Acid	0	0	0	0	0
TEG	0.00127049	0	5.71452E-08	0	0
O2	0	0	0	0	0

Mass Flow	DRY GAS lb/h	INLET GAS lb/h	TO THERMAL OXIDIZER lb/h	2 lb/h	3 lb/h
H2S	0.00133077	0.00134191	7.9093E-06	0.00134191	2.61943E-10
CO2	0.366892	0.367629	0.000278949	0.367629	2.62527E-08
N2	9023.46	9024.1	0.00872983	9024.1	2.73699E-05
Methane	330629	330706	4.62306	330706	0.00175037
Ethane	90594.6	90650.6	10.2345	90650.6	0.000447897
Propane	63000.3	63060.4	17.5565	63060.4	0.000175014
i-Butane	11302.3	11314.4	4.1837	11314.4	1.38252E-05
n-Butane	25127.8	25166.7	16.5113	25166.7	5.1932E-05
i-Pentane	7027.83	7041.19	6.30283	7041.19	6.56649E-06
n-Pentane	7383.68	7400.46	8.06154	7400.46	4.41288E-06
n-Hexane	5775.26	5795.97	8.95219	5795.97	1.69558E-06
n-Heptane	3681.43	3700.35	5.19816	3700.35	5.35713E-07
n-Octane	636.621	641.071	0.576587	641.071	3.81124E-08
n-Nonane	0	0	0	0	0
n-Decane	0	0	0	0	0
Undecane	0	0	0	0	0
Benzene	430.266	460.851	12.556	460.851	5.69175E-05
Toluene	257.674	286.28	6.04863	286.28	2.22858E-05
Ethylbenzene	119.797	136.87	1.42249	136.87	5.96953E-06
m-Xylene	80.2541	92.0397	0.989654	92.0397	3.23571E-06
Water	125.886	1347.84	4.39797	1345.74	2.09304
MDEA	0.00882887	0.0965158	0.000511035	0.096515	8.16657E-07
Piperazine	0.697691	1.60313	7.37937E-06	1.47489	0.128246
Phosphoric Acid	0	0	0	0	0
TEG	7.05383	0	6.15024E-08	0	0
O2	0	0	0	0	0

Stream Properties

Property	Units	DRY GAS	INLET GAS	TO THERMAL OXIDIZER	2	3
Temperature	°F	133.686	130.469	120	130.359	130.359
Pressure	psia	947.696	953.696	15.4959	951.696	951.696
Mole Fraction Vapor	%	100	100	100	100	0
Mole Fraction Light Liquid	%	0	0	0	0	100
Mole Fraction Heavy Liquid	%	0	0	0	0	0
Molecular Weight	lb/lbmol	21.0892	21.0879	48.1282	21.0879	18.878
Mass Density	lb/ft^3	3.68685	3.74867	0.12187	3.74087	61.7059
Molar Flow	lbmol/h	26326.4	26405	2.23621	26404.9	0.117801
Mass Flow	lb/h	555204	556827	107.625	556825	2.22385
Vapor Volumetric Flow	ft^3/h	150590	148540	883.113	148849	0.0360395
Liquid Volumetric Flow	gpm	18774.9	18519.2	110.102	18557.8	0.00449324
Std Vapor Volumetric Flow	MMSCFD	239.771	240.487	0.0203665	240.486	0.00107289
Std Liquid Volumetric Flow	sgpm	3187.36	3191.46	0.374793	3191.45	0.00455534
Specific Gravity		0.728156	0.728112	1.66174	0.728112	0.989372
API Gravity						9.50463
Net Ideal Gas Heating Value	Btu/ft^3	1143.66	1141.05	2354.38	1141.06	41.4079
Net Liquid Heating Value	Btu/lb	20518.2	20470.2	18369.7	20470.3	-179.522
Gross Ideal Gas Heating Value	Btu/ft^3	1260.49	1257.73	2544.51	1257.74	94.3255
Gross Liquid Heating Value	Btu/lb	22620.8	22570.2	19869.2	22570.3	884.226

Warnings

ProMax 6.0.22251.0
Copyright © 2002-2022 BRE Group, Ltd.
Licensed to Trinity Consultants, Inc. and Affiliates

Process Streams Report
All Streams
Tabulated by Total Phase

Client Name:	Targa Resources	Job: Wildcat II
Location:	DOU	
Flowsheet:	RR1 TEG	

ProMax:ProMax!Project!Flowsheets!RR1 TEG!PStreams!DRY GAS!Analyses!Freeze 1!Properties!Water Dew Point
Warning: Water dew point temperature is thermodynamically unstable as other phases will form instead of a free aqueous liquid phase.

Remarks

ProMax 6.0.22251.0
Copyright © 2002-2022 BRE Group, Ltd.
Licensed to Trinity Consultants, Inc. and Affiliates

Process Streams Report
All Streams
Tabulated by Total Phase

Client Name:	Targa Resources	Job: Wildcat II
Location:	DOU	
Flowsheet:	RR1 TEG	

Connections

	4	6	7	8	9
From Block	T-3500	T-3500	XCHG-100	VSSL-100	MIX-100
To Block	V-3400	XCHG-100	LCV-3500	--	V-3402

Stream Composition

Mole Fraction	4 %	6 %	7 %	8 %	9 %
H2S	1.4832E-07	1.36246E-07	1.36246E-07	1.60835E-08	1.36246E-07
CO2	3.16665E-05	6.98416E-06	6.98416E-06	1.38095E-07	6.98416E-06
N2	1.22353	0.00952493	0.00952493	3.16047E-07	0.00952493
Methane	78.2848	2.00554	2.00554	0.000911329	2.00554
Ethane	11.4444	0.77575	0.77575	0.00466465	0.77575
Propane	5.42694	0.568087	0.568087	0.0147255	0.568087
i-Butane	0.738641	0.0867892	0.0867892	0.00538855	0.0867892
n-Butane	1.64218	0.278712	0.278712	0.0329048	0.278712
i-Pentane	0.369999	0.0771425	0.0771425	0.0254316	0.0771425
n-Pentane	0.388734	0.0969228	0.0969228	0.0422722	0.0969228
n-Hexane	0.254564	0.100191	0.100191	0.111992	0.100191
n-Heptane	0.139556	0.0787119	0.0787119	0.15422	0.0787119
n-Octane	0.0211697	0.016242	0.016242	0.043395	0.016242
n-Nonane	0	0	0	0	0
n-Decane	0	0	0	0	0
Undecane	0	0	0	0	0
Benzene	0.0209232	0.164008	0.164008	0.324525	0.164008
Toluene	0.0106228	0.1311	0.1311	0.352217	0.1311
Ethylbenzene	0.00428622	0.0690948	0.0690948	0.213695	0.0690948
m-Xylene	0.0028714	0.0477456	0.0477456	0.147442	0.0477456
Water	0.0265427	33.4972	33.4972	98.5138	33.4972
MDEA	2.81433E-07	0.006272	0.006272	0.000270797	0.006272
Piperazine	3.07673E-05	0.0177603	0.0177603	0.00921715	0.0177603
Phosphoric Acid	0	0	0	0	0
TEG	0.000178419	61.9732	61.9732	0.00291982	61.9732
O2	0	0	0	0	0

Mass Fraction	4 %	6 %	7 %	8 %	9 %
H2S	2.3969E-07	4.60527E-08	4.60527E-08	2.86964E-08	4.60527E-08
CO2	6.60824E-05	3.04847E-06	3.04847E-06	3.1817E-07	3.04847E-06
N2	1.62525	0.00264636	0.00264636	4.63504E-07	0.00264636
Methane	59.5508	0.319098	0.319098	0.000765389	0.319098
Ethane	16.3174	0.231347	0.231347	0.00734301	0.231347
Propane	11.3472	0.248446	0.248446	0.0339939	0.248446
i-Butane	2.0357	0.0500299	0.0500299	0.0163964	0.0500299
n-Butane	4.52587	0.160665	0.160665	0.100124	0.160665
i-Pentane	1.26581	0.0552007	0.0552007	0.0960591	0.0552007
n-Pentane	1.3299	0.0693548	0.0693548	0.159669	0.0693548
n-Hexane	1.04021	0.0856317	0.0856317	0.50525	0.0856317
n-Heptane	0.663077	0.0782237	0.0782237	0.809007	0.0782237
n-Octane	0.114664	0.0184008	0.0184008	0.259508	0.0184008
n-Nonane	0	0	0	0	0
n-Decane	0	0	0	0	0
Undecane	0	0	0	0	0
Benzene	0.077497	0.127058	0.127058	1.32709	0.127058
Toluene	0.0464107	0.119803	0.119803	1.69898	0.119803
Ethylbenzene	0.0215772	0.0727526	0.0727526	1.18771	0.0727526
m-Xylene	0.0144549	0.0502732	0.0502732	0.819479	0.0502732
Water	0.0226738	5.98509	5.98509	92.9124	5.98509
MDEA	1.5902E-06	0.00741253	0.00741253	0.00168935	0.00741253
Piperazine	0.000125664	0.0151725	0.0151725	0.0415638	0.0151725
Phosphoric Acid	0	0	0	0	0
TEG	0.00127049	92.3034	92.3034	0.0229553	92.3034

Copyright © 2002-2022 BRE Group, Ltd.
Licensed to Trinity Consultants, Inc. and Affiliates

Process Streams Report
All Streams
Tabulated by Total Phase

Client Name:	Targa Resources	Job: Wildcat II
Location:	DOU	
Flowsheet:	RR1 TEG	

Mass Fraction	4 %	6 %	7 %	8 %	9 %
O2	0	0	0	0	0

Mass Flow	4 lb/h	6 lb/h	7 lb/h	8 lb/h	9 lb/h
H2S	0.00133077	1.11408E-05	1.11408E-05	3.74873E-07	1.11408E-05
CO2	0.366892	0.000737469	0.000737469	4.15637E-06	0.000737469
N2	9023.46	0.640192	0.640192	6.05493E-06	0.640192
Methane	330629	77.1942	77.1942	0.00999856	77.1942
Ethane	90594.6	55.966	55.966	0.0959245	55.966
Propane	63000.3	60.1026	60.1026	0.444075	60.1026
i-Butane	11302.3	12.1029	12.1029	0.214193	12.1029
n-Butane	25127.8	38.867	38.867	1.30796	38.867
i-Pentane	7027.83	13.3538	13.3538	1.25486	13.3538
n-Pentane	7383.68	16.7779	16.7779	2.08581	16.7779
n-Hexane	5775.26	20.7155	20.7155	6.60028	20.7155
n-Heptane	3681.43	18.9234	18.9234	10.5684	18.9234
n-Octane	636.621	4.45141	4.45141	3.39005	4.45141
n-Nonane	0	0	0	0	0
n-Decane	0	0	0	0	0
Undecane	0	0	0	0	0
Benzene	430.266	30.7372	30.7372	17.3363	30.7372
Toluene	257.674	28.9819	28.9819	22.1944	28.9819
Ethylbenzene	119.797	17.5999	17.5999	15.5156	17.5999
m-Xylene	80.2541	12.1618	12.1618	10.7052	12.1618
Water	125.886	1447.88	1447.88	1213.75	1447.88
MDEA	0.00882887	1.79319	1.79319	0.0220686	1.79319
Piperazine	0.697691	3.67043	3.67043	0.542963	3.67043
Phosphoric Acid	0	0	0	0	0
TEG	7.05383	22329.5	22329.5	0.299874	22329.5
O2	0	0	0	0	0

Stream Properties

Property	Units	4	6	7	8	9
Temperature	°F	133.8	133.331	143.896	120	147.044
Pressure	psia	949.696	951.696	948.696	15.4959	79.6959
Mole Fraction Vapor	%	100	0	0.00662784	0	3.26718
Mole Fraction Light Liquid	%	0	100	99.9934	1.46285	96.7328
Mole Fraction Heavy Liquid	%	0	0	0	98.5372	0
Molecular Weight	lb/lbmol	21.0892	100.827	100.827	19.1014	100.827
Mass Density	lb/ft^3	3.69451	66.6964	66.3485	60.5276	24.6267
Molar Flow	lbmol/h	26326.4	239.929	239.929	68.3898	239.929
Mass Flow	lb/h	555204	24191.4	24191.4	1306.34	24191.4
Vapor Volumetric Flow	ft^3/h	150278	362.709	364.611	21.5825	982.324
Liquid Volumetric Flow	gpm	18736	45.2209	45.458	2.69081	122.472
Std Vapor Volumetric Flow	MMSCFD	239.771	2.18518	2.18518	0.622868	2.18518
Std Liquid Volumetric Flow	sgpm	3187.36	44.0983	44.0983	2.65712	44.0983
Specific Gravity		0.728156	1.06939		0.97048	
API Gravity			-3.3439		12.3293	
Net Ideal Gas Heating Value	Btu/ft^3	1143.66	2429.55	2429.55	64.3694	2429.55
Net Liquid Heating Value	Btu/lb	20518.2	8838.7	8838.7	281.774	8838.7
Gross Ideal Gas Heating Value	Btu/ft^3	1260.49	2671.82	2671.82	117.623	2671.82
Gross Liquid Heating Value	Btu/lb	22620.8	9750.55	9750.55	1339.76	9750.55

Remarks

ProMax 6.0.22251.0
Copyright © 2002-2022 BRE Group, Ltd.
Licensed to Trinity Consultants, Inc. and Affiliates

Process Streams Report
All Streams
Tabulated by Total Phase

Client Name:	Targa Resources	Job: Wildcat II
Location:	DOU	
Flowsheet:	RR1 TEG	

Connections

	10	11	12	13	14
From Block	V-3402	V-3402	Filtration	Filtration	E-3200
To Block	Filtration	--	--	E-3201/3202	T-3501

Stream Composition

Mole Fraction	10 %	11 %	12 %	13 %	14 %
H2S	1.04995E-07	1.06149E-06	1.12797E-06	1.04765E-07	1.8304E-09
CO2	2.80271E-06	0.000130786	0.000137853	2.77233E-06	1.04017E-08
N2	0.0001844	0.286074	0.222465	0.000134395	4.02584E-08
Methane	0.13693	57.3302	55.5589	0.124462	9.77365E-05
Ethane	0.152498	19.2286	19.8785	0.148061	0.000310907
Propane	0.178737	12.0957	12.6637	0.175928	0.000668653
i-Butane	0.0329991	1.67937	1.76361	0.0326098	0.00017143
n-Butane	0.133186	4.58736	4.83553	0.132129	0.000981902
i-Pentane	0.0453774	1.01763	1.07444	0.0451459	0.000539978
n-Pentane	0.0608789	1.16409	1.23014	0.0606159	0.000824781
n-Hexane	0.0779621	0.758339	0.802284	0.0777992	0.00267936
n-Heptane	0.0679099	0.398531	0.421587	0.0678303	0.00270222
n-Octane	0.0149832	0.0535129	0.0565784	0.0149738	0.000934388
n-Nonane	0	0	0	0	0
n-Decane	0	0	0	0	0
Undecane	0	0	0	0	0
Benzene	0.165754	0.112311	0.119179	0.165765	0.0407013
Toluene	0.13384	0.0499938	0.053003	0.133858	0.0615941
Ethylbenzene	0.0708823	0.0161734	0.0171242	0.0708944	0.0550201
m-Xylene	0.0489906	0.0108835	0.0115233	0.0489991	0.0393191
Water	34.5877	1.21052	1.29071	34.5951	92.5176
MDEA	0.0064838	1.00809E-06	1.06753E-06	0.00648526	0.00278906
Piperazine	0.0183551	0.000151889	0.000161277	0.0183592	0.0731096
Phosphoric Acid	0	0	0	0	0
TEG	64.0664	0.000391656	0.00041375	64.0808	7.19998
O2	0	0	0	0	0

Mass Fraction	10 %	11 %	12 %	13 %	14 %
H2S	3.46344E-08	1.33469E-06	1.39187E-06	3.45528E-08	2.24857E-09
CO2	1.19386E-06	0.000212356	0.00021966	1.18072E-06	1.65005E-08
N2	4.99981E-05	0.295665	0.225641	3.64337E-05	4.0651E-08
Methane	0.0212617	33.9321	32.2711	0.0193225	5.65167E-05
Ethane	0.0443825	21.3316	21.6417	0.0430838	0.000336976
Propane	0.0762844	19.6781	20.2184	0.0750733	0.00106278
i-Butane	0.018564	3.60119	3.71136	0.018342	0.000359152
n-Butane	0.0749254	9.83696	10.176	0.074318	0.00205712
i-Pentane	0.031688	2.70878	2.80673	0.0315212	0.00140428
n-Pentane	0.0425131	3.09864	3.21345	0.0423224	0.00214495
n-Hexane	0.065027	2.41103	2.50323	0.0648804	0.00832268
n-Heptane	0.0658622	1.47331	1.52951	0.0657742	0.00975989
n-Octane	0.0165656	0.225522	0.233999	0.0165525	0.00384725
n-Nonane	0	0	0	0	0
n-Decane	0	0	0	0	0
Undecane	0	0	0	0	0
Benzene	0.125316	0.323665	0.33706	0.125304	0.114597
Toluene	0.119358	0.169947	0.17682	0.119355	0.204564
Ethylbenzene	0.072836	0.0633487	0.0658235	0.0728364	0.210548
m-Xylene	0.0503409	0.0426292	0.0442942	0.0503413	0.150464
Water	6.03099	0.804579	0.841897	6.03131	60.0778
MDEA	0.00747817	4.43193E-06	4.60585E-06	0.00747862	0.0119797
Piperazine	0.0153026	0.000482686	0.000502974	0.0153035	0.22699
Phosphoric Acid	0	0	0	0	0
TEG	93.1212	0.00216996	0.00224967	93.1268	38.9737

Copyright © 2002-2022 BRE Group, Ltd.
Licensed to Trinity Consultants, Inc. and Affiliates

Process Streams Report
All Streams
Tabulated by Total Phase

Client Name:	Targa Resources	Job: Wildcat II
Location:	DOU	
Flowsheet:	RR1 TEG	

Mass Fraction	10 %	11 %	12 %	13 %	14 %
O2	0	0	0	0	0

Mass Flow	10 lb/h	11 lb/h	12 lb/h	13 lb/h	14 lb/h
H2S	8.30495E-06	2.83584E-06	2.0067E-08	8.28489E-06	3.22782E-08
CO2	0.000286274	0.000451195	3.1669E-06	0.000283107	2.36865E-07
N2	0.011989	0.628203	0.00325312	0.00873588	5.83545E-07
Methane	5.09832	72.0958	0.465262	4.63306	0.000811296
Ethane	10.6424	45.3236	0.312015	10.3304	0.00483728
Propane	18.2922	41.8104	0.291494	18.0007	0.0152562
i-Butane	4.45145	7.65149	0.0535077	4.39794	0.00515563
n-Butane	17.9663	20.9007	0.14671	17.8196	0.0295299
i-Pentane	7.59845	5.75538	0.0404654	7.55798	0.0201584
n-Pentane	10.1942	6.58373	0.0463292	10.1479	0.0307907
n-Hexane	15.5928	5.12274	0.0360897	15.5567	0.119472
n-Heptane	15.793	3.13036	0.0220514	15.771	0.140103
n-Octane	3.97224	0.47917	0.00337363	3.96887	0.0552272
n-Nonane	0	0	0	0	0
n-Decane	0	0	0	0	0
Undecane	0	0	0	0	0
Benzene	30.0495	0.687694	0.00485949	30.0447	1.64504
Toluene	28.6208	0.361088	0.00254926	28.6183	2.93651
Ethylbenzene	17.4653	0.134598	0.000948996	17.4643	3.02242
m-Xylene	12.0712	0.0905747	0.000638602	12.0706	2.15992
Water	1446.17	1.7095	0.0121379	1446.16	862.416
MDEA	1.79318	9.41656E-06	6.64038E-08	1.79318	0.171968
Piperazine	3.6694	0.00102557	7.25151E-06	3.6694	3.25843
Phosphoric Acid	0	0	0	0	0
TEG	22329.5	0.00461055	3.24341E-05	22329.5	559.467
O2	0	0	0	0	0

Stream Properties

Property	Units	10	11	12	13	14
Temperature	°F	147.044	147.044	147.061	147.061	400 *
Pressure	psia	79.6959	79.6959	74.6959	74.6959	16.6959
Mole Fraction Vapor	%	0	100	100	0	100
Mole Fraction Light Liquid	%	100	0	0	100	0
Mole Fraction Heavy Liquid	%	0	0	0	0	0
Molecular Weight	lb/lbmol	103.317	27.1046	27.6192	103.334	27.7429
Mass Density	lb/ft^3	67.2246	0.339614	0.324162	67.2308	0.0505814
Molar Flow	lbmol/h	232.09	7.83892	0.0522002	232.038	51.743
Mass Flow	lb/h	23978.9	212.471	1.44173	23977.5	1435.5
Vapor Volumetric Flow	ft^3/h	356.699	625.625	4.44755	356.645	28379.9
Liquid Volumetric Flow	gpm	44.4716	78	0.5545	44.4648	3538.28
Std Vapor Volumetric Flow	MMSCFD	2.11379	0.0713939	0.00047542	2.11331	0.471255
Std Liquid Volumetric Flow	sgpm	43.0268	1.07146	0.00720479	43.0196	2.74715
Specific Gravity		1.07786	0.935853	0.953618	1.07796	0.957889
API Gravity		-5.06174			-5.07361	
Net Ideal Gas Heating Value	Btu/ft^3	2462.76	1446.34	1472.2	2462.98	283.543
Net Liquid Heating Value	Btu/lb	8738.57	20138.6	20113.5	8737.89	3138.74
Gross Ideal Gas Heating Value	Btu/ft^3	2708.53	1585.12	1612.85	2708.77	356.069
Gross Liquid Heating Value	Btu/lb	9641.28	22082.2	22046.6	9640.54	4130.79

Remarks

ProMax 6.0.22251.0
Copyright © 2002-2022 BRE Group, Ltd.
Licensed to Trinity Consultants, Inc. and Affiliates

Process Streams Report
All Streams
Tabulated by Total Phase

Client Name:	Targa Resources	Job: Wildcat II
Location:	DOU	
Flowsheet:	RR1 TEG	

Connections

	15	16	17	18	19
From Block	T-3501	T-3501	ST-3501	E-3201/3202	LCV-3402
To Block	E-3200	ST-3501	T-3501	LCV-3402	T-3501

Stream Composition

Mole Fraction	15 %	16 %	17 %	18 %	19 %
H2S	4.54098E-10	3.20112E-07	7.21735E-10	1.04765E-07	1.04765E-07
CO2	2.54377E-09	8.47062E-06	5.323E-09	2.77233E-06	2.77233E-06
N2	9.78383E-09	0.000410616	1.28743E-08	0.000134395	0.000134395
Methane	2.37827E-05	0.380271	2.69684E-05	0.124462	0.124462
Ethane	7.58349E-05	0.452372	5.07069E-05	0.148061	0.148061
Propane	0.000163481	0.537514	6.83571E-05	0.175928	0.175928
i-Butane	4.19922E-05	0.0996323	9.30288E-06	0.0326098	0.0326098
n-Butane	0.00024095	0.40369	7.10182E-05	0.132129	0.132129
i-Pentane	0.000133034	0.13793	2.02907E-05	0.0451459	0.0451459
n-Pentane	0.000203463	0.185192	2.85798E-05	0.0606159	0.0606159
n-Hexane	0.000673336	0.237638	3.90088E-05	0.0777992	0.0777992
n-Heptane	0.000676869	0.207185	2.9297E-05	0.0678303	0.0678303
n-Octane	0.000235996	0.0457243	6.80607E-06	0.0149738	0.0149738
n-Nonane	0	0	0	0	0
n-Decane	0	0	0	0	0
Undecane	0	0	0	0	0
Benzene	0.0107954	0.504115	0.00319031	0.165765	0.165765
Toluene	0.0168627	0.403837	0.00320079	0.133858	0.133858
Ethylbenzene	0.0156817	0.210197	0.00171748	0.0708944	0.0708944
m-Xylene	0.0112051	0.145132	0.00121654	0.0489991	0.0489991
Water	28.3961	95.5854	93.5303	34.5951	34.5951
MDEA	0.00764793	0.000299	0.000706618	0.00648526	0.00648526
Piperazine	0.0347755	0.0210386	0.181845	0.0183592	0.0183592
Phosphoric Acid	0	0	0	0	0
TEG	71.5045	0.442372	6.27749	64.0808	64.0808
O2	0	0	0	0	0

Mass Fraction	15 %	16 %	17 %	18 %	19 %
H2S	1.37456E-10	5.32951E-07	9.30201E-10	3.45528E-08	3.45528E-08
CO2	9.94318E-10	1.82111E-05	8.85913E-09	1.18072E-06	1.18072E-06
N2	2.43431E-09	0.000561923	1.36389E-08	3.64337E-05	3.64337E-05
Methane	3.3887E-06	0.298016	1.63612E-05	0.0193225	0.0193225
Ethane	2.0253E-05	0.664493	5.766E-05	0.0430838	0.0430838
Propane	6.40271E-05	1.15787	0.00011399	0.0750733	0.0750733
i-Butane	2.16777E-05	0.28289	2.04479E-05	0.018342	0.018342
n-Butane	0.000124386	1.14621	0.000156099	0.074318	0.074318
i-Pentane	8.52501E-05	0.486141	5.53622E-05	0.0315212	0.0315212
n-Pentane	0.000130382	0.65272	7.79788E-05	0.0423224	0.0423224
n-Hexane	0.000515367	1.0004	0.000127126	0.0648804	0.0648804
n-Heptane	0.000602396	1.01417	0.000111016	0.0657742	0.0657742
n-Octane	0.000239431	0.25515	2.94008E-05	0.0165525	0.0165525
n-Nonane	0	0	0	0	0
n-Decane	0	0	0	0	0
Undecane	0	0	0	0	0
Benzene	0.00748958	1.92363	0.00942406	0.125304	0.125304
Toluene	0.0137997	1.8177	0.0111528	0.119355	0.119355
Ethylbenzene	0.0147868	1.09014	0.00689542	0.0728364	0.0728364
m-Xylene	0.0105657	0.752694	0.00488425	0.0503413	0.0503413
Water	4.54361	84.1216	63.7208	6.03131	6.03131
MDEA	0.00809439	0.00174054	0.00318428	0.00747862	0.00747862
Piperazine	0.0266046	0.0885267	0.592342	0.0153035	0.0153035
Phosphoric Acid	0	0	0	0	0
TEG	95.3732	3.2453	35.6505	93.1268	93.1268

Copyright © 2002-2022 BRE Group, Ltd.
Licensed to Trinity Consultants, Inc. and Affiliates

Process Streams Report
All Streams
Tabulated by Total Phase

Client Name:	Targa Resources	Job: Wildcat II
Location:	DOU	
Flowsheet:	RR1 TEG	

Mass Fraction	15 %	16 %	17 %	18 %	19 %
O2	0	0	0	0	0

Mass Flow	15 lb/h	16 lb/h	17 lb/h	18 lb/h	19 lb/h
H2S	3.2988E-08	8.28549E-06	1.3086E-09	8.28489E-06	8.28489E-06
CO2	2.38627E-07	0.000283118	1.2463E-08	0.000283107	0.000283107
N2	5.84211E-07	0.0087359	1.91871E-08	0.00873588	0.00873588
Methane	0.000813255	4.63308	2.30168E-05	4.63306	4.63306
Ethane	0.00486053	10.3305	8.11158E-05	10.3304	10.3304
Propane	0.0153659	18.0007	0.000160361	18.0007	18.0007
i-Butane	0.00520243	4.39792	2.87659E-05	4.39794	4.39794
n-Butane	0.0298514	17.8195	0.000219599	17.8196	17.8196
i-Pentane	0.0204592	7.55776	7.78832E-05	7.55798	7.55798
n-Pentane	0.0312903	10.1475	0.0001097	10.1479	10.1479
n-Hexane	0.123683	15.5526	0.00017884	15.5567	15.5567
n-Heptane	0.144569	15.7667	0.000156177	15.771	15.771
n-Octane	0.0574612	3.96668	4.13609E-05	3.96887	3.96887
n-Nonane	0	0	0	0	0
n-Decane	0	0	0	0	0
Undecane	0	0	0	0	0
Benzene	1.79743	29.9055	0.0132577	30.0447	30.0447
Toluene	3.31179	28.2587	0.0156898	28.6183	28.6183
Ethylbenzene	3.54869	16.9478	0.00970044	17.4643	17.4643
m-Xylene	2.53567	11.7017	0.00687113	12.0706	12.0706
Water	1090.42	1307.79	89.6421	1446.16	1446.16
MDEA	1.94257	0.0270592	0.00447963	1.79318	1.79318
Piperazine	6.38485	1.37627	0.833303	3.6694	3.6694
Phosphoric Acid	0	0	0	0	0
TEG	22888.6	50.4528	50.1529	22329.5	22329.5
O2	0	0	0	0	0

Stream Properties

Property	Units	15	16	17	18	19
Temperature	°F	299.106	290.882	215	315 *	290.044
Pressure	psia	16.6959	15.6959	15.6959	73.6959	15.6959 *
Mole Fraction Vapor	%	0	100	0	0.436761	10.9965
Mole Fraction Light Liquid	%	100	0	100	99.5632	89.0035
Mole Fraction Heavy Liquid	%	0	0	0	0	0
Molecular Weight	lb/lbmol	112.59	20.4703	26.4431	103.334	103.334
Mass Density	lb/ft^3	62.1996	0.0401682	62.5501	47.7327	1.79383
Molar Flow	lbmol/h	213.155	75.9461	5.32009	232.038	232.038
Mass Flow	lb/h	23999	1554.64	140.679	23977.5	23977.5
Vapor Volumetric Flow	ft^3/h	385.839	38703.3	2.24907	502.328	13366.6
Liquid Volumetric Flow	gpm	48.1046	4825.35	0.280403	62.628	1666.49
Std Vapor Volumetric Flow	MMSCFD	1.94133	0.691688	0.0484533	2.11331	2.11331
Std Liquid Volumetric Flow	sgpm	42.7349	3.3023	0.270386	43.0196	43.0196
Specific Gravity		0.997289	0.706788	1.00291		
API Gravity		-5.87213		2.47186		
Net Ideal Gas Heating Value	Btu/ft^3	2704.65	144.334	243.319	2462.98	2462.98
Net Liquid Heating Value	Btu/lb	8820.08	1754.82	2722.46	8737.89	8737.89
Gross Ideal Gas Heating Value	Btu/ft^3	2970.74	202.764	312.938	2708.77	2708.77
Gross Liquid Heating Value	Btu/lb	9716.94	2838.05	3721.57	9640.54	9640.54

Remarks

ProMax 6.0.22251.0
Copyright © 2002-2022 BRE Group, Ltd.
Licensed to Trinity Consultants, Inc. and Affiliates

Process Streams Report
All Streams
Tabulated by Total Phase

Client Name:	Targa Resources	Job: Wildcat II
Location:	DOU	
Flowsheet:	RR1 TEG	

Connections

	20	21	23	24	25
From Block	ST-3501	FAXR-100	E-3200	V-3400	LCV-3400
To Block	FAXR-100	VSSL-100	E-3201/3202	LCV-3400	MIX-100

Stream Composition

Mole Fraction	20 %	21 %	23 %	24 %	25 %
H2S	3.44171E-07	3.44171E-07	1.29034E-11		
CO2	9.10829E-06	9.10829E-06	2.47961E-11		
N2	0.000441546	0.000441546	1.47492E-11		
Methane	0.408914	0.408914	7.56666E-08		
Ethane	0.486444	0.486444	4.79002E-07		
Propane	0.577998	0.577998	1.54039E-06		
i-Butane	0.107137	0.107137	4.98832E-07		
n-Butane	0.434093	0.434093	3.42673E-06		
i-Pentane	0.148318	0.148318	2.58249E-06		
n-Pentane	0.19914	0.19914	4.29078E-06		
n-Hexane	0.255536	0.255536	3.02742E-05		
n-Heptane	0.22279	0.22279	2.76131E-05		
n-Octane	0.0491681	0.0491681	1.21163E-05		
n-Nonane	0	0	0		
n-Decane	0	0	0		
Undecane	0	0	0		
Benzene	0.541848	0.541848	0.00120864		
Toluene	0.434016	0.434016	0.00252338		
Ethylbenzene	0.225901	0.225901	0.00307112		
m-Xylene	0.155972	0.155972	0.00219272		
Water	95.7403	95.7403	7.84099		
MDEA	0.000268295	0.000268295	0.00920551		
Piperazine	0.00892543	0.00892543	0.0224869		
Phosphoric Acid	0	0	0		
TEG	0.00282737	0.00282737	92.1182		
O2	0	0	0		

Mass Fraction	20 %	21 %	23 %	24 %	25 %
H2S	5.85884E-07	5.85884E-07	3.14588E-12		
CO2	2.00221E-05	2.00221E-05	7.80653E-12		
N2	0.000617829	0.000617829	2.95571E-12		
Methane	0.327665	0.327665	8.68368E-09		
Ethane	0.730599	0.730599	1.03035E-07		
Propane	1.27306	1.27306	4.85909E-07		
i-Butane	0.311033	0.311033	2.07408E-07		
n-Butane	1.26024	1.26024	1.42479E-06		
i-Pentane	0.534504	0.534504	1.3329E-06		
n-Pentane	0.717654	0.717654	2.21459E-06		
n-Hexane	1.09992	1.09992	1.86631E-05		
n-Heptane	1.11506	1.11506	1.97933E-05		
n-Octane	0.280533	0.280533	9.90089E-06		
n-Nonane	0	0	0		
n-Decane	0	0	0		
Undecane	0	0	0		
Benzene	2.11408	2.11408	0.000675371		
Toluene	1.99744	1.99744	0.00166323		
Ethylbenzene	1.19791	1.19791	0.00233242		
m-Xylene	0.827096	0.827096	0.0016653		
Water	86.1514	86.1514	1.01051		
MDEA	0.0015969	0.0015969	0.0078472		
Piperazine	0.0384006	0.0384006	0.0138561		
Phosphoric Acid	0	0	0		
TEG	0.0212081	0.0212081	98.9614		

Copyright © 2002-2022 BRE Group, Ltd.
Licensed to Trinity Consultants, Inc. and Affiliates

Process Streams Report
All Streams
Tabulated by Total Phase

Client Name:	Targa Resources	Job: Wildcat II
Location:	DOU	
Flowsheet:	RR1 TEG	

Mass Fraction	20 %	21 %	23 %	24 %	25 %
O2	0	0	0		

Mass Flow	20 lb/h	21 lb/h	23 lb/h	24 lb/h	25 lb/h
H2S	8.28418E-06	8.28418E-06	7.09821E-10	0	0
CO2	0.000283105	0.000283105	1.76143E-09	0	0
N2	0.00873588	0.00873588	6.66912E-10	0	0
Methane	4.63306	4.63306	1.95934E-06	0	0
Ethane	10.3304	10.3304	2.32484E-05	0	0
Propane	18.0006	18.0006	0.000109638	0	0
i-Butane	4.39789	4.39789	4.67985E-05	0	0
n-Butane	17.8193	17.8193	0.000321483	0	0
i-Pentane	7.55768	7.55768	0.000300749	0	0
n-Pentane	10.1474	10.1474	0.00049969	0	0
n-Hexane	15.5525	15.5525	0.00421105	0	0
n-Heptane	15.7665	15.7665	0.00446608	0	0
n-Octane	3.96664	3.96664	0.00223399	0	0
n-Nonane	0	0	0	0	0
n-Decane	0	0	0	0	0
Undecane	0	0	0	0	0
Benzene	29.8923	29.8923	0.152388	0	0
Toluene	28.243	28.243	0.375284	0	0
Ethylbenzene	16.9381	16.9381	0.526276	0	0
m-Xylene	11.6948	11.6948	0.375751	0	0
Water	1218.15	1218.15	228.007	0	0
MDEA	0.0225796	0.0225796	1.77061	0	0
Piperazine	0.542971	0.542971	3.12642	0	0
Phosphoric Acid	0	0	0	0	0
TEG	0.299874	0.299874	22329.2	0	0
O2	0	0	0	0	0

Stream Properties

Property	Units	20	21	23	24	25
Temperature	°F	215 *	120 *	400		
Pressure	psia	15.6959	15.4959	16.6959	947.696	79.6959 *
Mole Fraction Vapor	%	100	3.16627	0		
Mole Fraction Light Liquid	%	0	1.41653	100		
Mole Fraction Heavy Liquid	%	0	95.4172	0		
Molecular Weight	lb/lbmol	20.0204	20.0204	139.789		
Mass Density	lb/ft^3	0.0437933	1.56292	58.0716		
Molar Flow	lbmol/h	70.626	70.626	161.412	0	0
Mass Flow	lb/h	1413.96	1413.96	22563.5	0	0
Vapor Volumetric Flow	ft^3/h	32287.2	904.696	388.546	0	0
Liquid Volumetric Flow	gpm	4025.41	112.793	48.4422	0	0
Std Vapor Volumetric Flow	MMSCFD	0.643235	0.643235	1.47008	0	0
Std Liquid Volumetric Flow	sgpm	3.03191	3.03191	39.9877	0	0
Specific Gravity		0.691254		0.931102		
API Gravity				-6.66822		
Net Ideal Gas Heating Value	Btu/ft^3	136.877	136.877	3480.77		
Net Liquid Heating Value	Btu/lb	1658.55	1658.55	9181.52		
Gross Ideal Gas Heating Value	Btu/ft^3	194.465	194.465	3808.91		
Gross Liquid Heating Value	Btu/lb	2750.14	2750.14	10072.3		

Remarks

ProMax 6.0.22251.0
Copyright © 2002-2022 BRE Group, Ltd.
Licensed to Trinity Consultants, Inc. and Affiliates

Process Streams Report
All Streams
Tabulated by Total Phase

Client Name:	Targa Resources	Job: Wildcat II
Location:	DOU	
Flowsheet:	RR1 TEG	

Connections

	26	27	28	29	30
From Block	LCV-3500	E-3201/3202	P-3600/3601	RCYL-1	--
To Block	MIX-100	P-3618/3619	T-3500	MKUP-1	MKUP-1

Stream Composition

Mole Fraction	26 %	27 %	28 %	29 %	30 %
H2S	1.36246E-07	1.29034E-11	0	1.29367E-11	0
CO2	6.98416E-06	2.47961E-11	0	2.48995E-11	0
N2	0.00952493	1.47492E-11	0	1.47285E-11	0
Methane	2.00554	7.56666E-08	7.57566E-08	7.57806E-08	0
Ethane	0.77575	4.79002E-07	4.80501E-07	4.80653E-07	0
Propane	0.568087	1.54039E-06	1.54585E-06	1.54634E-06	0
i-Butane	0.0867892	4.98832E-07	5.00657E-07	5.00816E-07	0
n-Butane	0.278712	3.42673E-06	3.43859E-06	3.43968E-06	0
i-Pentane	0.0771425	2.58249E-06	2.59075E-06	2.59157E-06	0
n-Pentane	0.0969228	4.29078E-06	4.30388E-06	4.30525E-06	0
n-Hexane	0.100191	3.02742E-05	3.03368E-05	3.03464E-05	0
n-Heptane	0.0787119	2.76131E-05	2.76701E-05	2.76789E-05	0
n-Octane	0.016242	1.21163E-05	1.21367E-05	1.21405E-05	0
n-Nonane	0	0	0	0	0
n-Decane	0	0	0	0	0
Undecane	0	0	0	0	0
Benzene	0.164008	0.00120864	0.00120978	0.00121017	0
Toluene	0.1311	0.00252338	0.00252555	0.00252635	0
Ethylbenzene	0.0690948	0.00307112	0.00307398	0.00307496	0
m-Xylene	0.0477456	0.00219272	0.00219478	0.00219548	0
Water	33.4972	7.84099	7.83921	7.84143	0.827516
MDEA	0.006272	0.00920551	0.00886451	0.00886732	0
Piperazine	0.0177603	0.0224869	0.0208037	0.0208103	0
Phosphoric Acid	0	0	0	0	0
TEG	61.9732	92.1182	92.122	92.1198	99.1725
O2	0	0	0	0	0

Mass Fraction	26 %	27 %	28 %	29 %	30 %
H2S	4.60527E-08	3.14588E-12	0	3.15399E-12	0
CO2	3.04847E-06	7.80653E-12	0	7.83905E-12	0
N2	0.00264636	2.95571E-12	0	2.95156E-12	0
Methane	0.319098	8.68368E-09	8.69378E-09	8.69672E-09	0
Ethane	0.231347	1.03035E-07	1.03355E-07	1.0339E-07	0
Propane	0.248446	4.85909E-07	4.87618E-07	4.87783E-07	0
i-Butane	0.0500299	2.07408E-07	2.08161E-07	2.08232E-07	0
n-Butane	0.160665	1.42479E-06	1.42968E-06	1.43017E-06	0
i-Pentane	0.0552007	1.3329E-06	1.33713E-06	1.33758E-06	0
n-Pentane	0.0693548	2.21459E-06	2.2213E-06	2.22205E-06	0
n-Hexane	0.0856317	1.86631E-05	1.87012E-05	1.87075E-05	0
n-Heptane	0.0782237	1.97933E-05	1.98338E-05	1.98405E-05	0
n-Octane	0.0184008	9.90089E-06	9.91725E-06	9.92061E-06	0
n-Nonane	0	0	0	0	0
n-Decane	0	0	0	0	0
Undecane	0	0	0	0	0
Benzene	0.127058	0.000675371	0.000675992	0.00067622	0
Toluene	0.119803	0.00166323	0.00166462	0.00166518	0
Ethylbenzene	0.0727526	0.00233242	0.00233453	0.00233532	0
m-Xylene	0.0502732	0.0016653	0.00166683	0.00166739	0
Water	5.98509	1.01051	1.01025	1.01056	0.1
MDEA	0.00741253	0.0078472	0.00755633	0.00755888	0
Piperazine	0.0151725	0.0138561	0.0128186	0.0128229	0
Phosphoric Acid	0	0	0	0	0
TEG	92.3034	98.9614	98.963	98.9627	99.9

Copyright © 2002-2022 BRE Group, Ltd.
Licensed to Trinity Consultants, Inc. and Affiliates

Process Streams Report
All Streams
Tabulated by Total Phase

Client Name:	Targa Resources	Job: Wildcat II	
Location:	DOU		
Flowsheet:	RR1 TEG		

Mass Fraction	26 %	27 %	28 %	29 %	30 %
O2	0	0	0	0	0

Mass Flow	26 lb/h	27 lb/h	28 lb/h	29 lb/h	30 lb/h
H2S	1.11408E-05	7.09821E-10	0	7.11635E-10	0
CO2	0.000737469	1.76143E-09	0	1.76872E-09	0
N2	0.640192	6.66912E-10	0	6.65961E-10	0
Methane	77.1942	1.95934E-06	1.96224E-06	1.96224E-06	0
Ethane	55.966	2.32484E-05	2.33278E-05	2.33278E-05	0
Propane	60.1026	0.000109638	0.000110058	0.000110058	0
i-Butane	12.1029	4.67985E-05	4.69833E-05	4.69833E-05	0
n-Butane	38.867	0.000321483	0.000322688	0.000322688	0
i-Pentane	13.3538	0.000300749	0.000301797	0.000301797	0
n-Pentane	16.7779	0.00049969	0.000501361	0.000501361	0
n-Hexane	20.7155	0.00421105	0.00422098	0.00422098	0
n-Heptane	18.9234	0.00446608	0.0044766	0.0044766	0
n-Octane	4.45141	0.00223399	0.00223838	0.00223838	0
n-Nonane	0	0	0	0	0
n-Decane	0	0	0	0	0
Undecane	0	0	0	0	0
Benzene	30.7372	0.152388	0.152575	0.152575	0
Toluene	28.9819	0.375284	0.375714	0.375714	0
Ethylbenzene	17.5999	0.526276	0.526918	0.526918	0
m-Xylene	12.1618	0.375751	0.376213	0.376213	0
Water	1447.88	228.007	228.021	228.013	0.0076333
MDEA	1.79319	1.77061	1.70551	1.70551	0
Piperazine	3.67043	3.12642	2.89323	2.89323	0
Phosphoric Acid	0	0	0	0	0
TEG	22329.5	22329.2	22336.5	22328.9	7.62567
O2	0	0	0	0	0

Stream Properties

Property	Units	26	27	28	29	30
Temperature	°F	147.044	218.266	126.413	217.561	120 *
Pressure	psia	79.6959 *	11.6959	1004.7 *	64.6959	139.696 *
Mole Fraction Vapor	%	3.26718	0	0	0	0
Mole Fraction Light Liquid	%	96.7328	100	100	100	100
Mole Fraction Heavy Liquid	%	0	0	0	0	0
Molecular Weight	lb/lbmol	100.827	139.789	139.792	139.789	149.079
Mass Density	lb/ft^3	24.6267	65.0392	68.4548	65.0707	68.731
Molar Flow	lbmol/h	239.929	161.412	161.458	161.407	0.051203
Mass Flow	lb/h	24191.4	22563.5	22570.6	22563	7.6333
Vapor Volumetric Flow	ft^3/h	982.324	346.922	329.716	346.746	0.111061
Liquid Volumetric Flow	gpm	122.472	43.2526	41.1074	43.2306	0.0138465
Std Vapor Volumetric Flow	MMSCFD	2.18518	1.47008	1.4705	1.47004	0.000466337
Std Liquid Volumetric Flow	sgpm	44.0983	39.9877	40	39.9865	0.0135106
Specific Gravity			1.04282	1.09758	1.04332	1.10201
API Gravity			-6.6675	-6.80922	-6.67559	-7.10018
Net Ideal Gas Heating Value	Btu/ft^3	2429.55	3480.77	3480.85	3480.77	3745.75
Net Liquid Heating Value	Btu/lb	8838.7	9181.52	9181.5	9181.47	9274.43
Gross Ideal Gas Heating Value	Btu/ft^3	2671.82	3808.91	3809	3808.91	4095.08
Gross Liquid Heating Value	Btu/lb	9750.55	10072.3	10072.3	10072.3	10163.6

Remarks

ProMax 6.0.22251.0
Copyright © 2002-2022 BRE Group, Ltd.
Licensed to Trinity Consultants, Inc. and Affiliates

Process Streams Report
All Streams
Tabulated by Total Phase

Client Name:	Targa Resources	Job: Wildcat II
Location:	DOU	
Flowsheet:	RR1 TEG	

Connections

	31	32	33	34	
From Block	MKUP-1	P-3618/3619	MKUP-1	AC-3300	
To Block	--	RCYL-1	AC-3300	P-3600/3601	

Stream Composition

Mole Fraction	31 %	32 %	33 %	34 %	
H2S	1.29367E-11	1.29034E-11	0	0	
CO2	2.48995E-11	2.47961E-11	0	0	
N2	1.47285E-11	1.47492E-11	0	0	
Methane	7.57806E-08	7.56666E-08	7.57566E-08	7.57566E-08	
Ethane	4.80653E-07	4.79002E-07	4.80501E-07	4.80501E-07	
Propane	1.54634E-06	1.54039E-06	1.54585E-06	1.54585E-06	
i-Butane	5.00816E-07	4.98832E-07	5.00657E-07	5.00657E-07	
n-Butane	3.43968E-06	3.42673E-06	3.43859E-06	3.43859E-06	
i-Pentane	2.59157E-06	2.58249E-06	2.59075E-06	2.59075E-06	
n-Pentane	4.30525E-06	4.29078E-06	4.30388E-06	4.30388E-06	
n-Hexane	3.03464E-05	3.02742E-05	3.03368E-05	3.03368E-05	
n-Heptane	2.76789E-05	2.76131E-05	2.76701E-05	2.76701E-05	
n-Octane	1.21405E-05	1.21163E-05	1.21367E-05	1.21367E-05	
n-Nonane	0	0	0	0	
n-Decane	0	0	0	0	
Undecane	0	0	0	0	
Benzene	0.00121017	0.00120864	0.00120978	0.00120978	
Toluene	0.00252635	0.00252338	0.00252555	0.00252555	
Ethylbenzene	0.00307496	0.00307112	0.00307398	0.00307398	
m-Xylene	0.00219548	0.00219272	0.00219478	0.00219478	
Water	7.84143	7.84099	7.83921	7.83921	
MDEA	0.00886732	0.00920551	0.00886451	0.00886451	
Piperazine	0.0208103	0.0224869	0.0208037	0.0208037	
Phosphoric Acid	0	0	0	0	
TEG	92.1198	92.1182	92.122	92.122	
O2	0	0	0	0	

Mass Fraction	31 %	32 %	33 %	34 %	
H2S	3.15399E-12	3.14588E-12	0	0	
CO2	7.83905E-12	7.80653E-12	0	0	
N2	2.95156E-12	2.95571E-12	0	0	
Methane	8.69672E-09	8.68368E-09	8.69378E-09	8.69378E-09	
Ethane	1.0339E-07	1.03035E-07	1.03355E-07	1.03355E-07	
Propane	4.87783E-07	4.85909E-07	4.87618E-07	4.87618E-07	
i-Butane	2.08232E-07	2.07408E-07	2.08161E-07	2.08161E-07	
n-Butane	1.43017E-06	1.42479E-06	1.42968E-06	1.42968E-06	
i-Pentane	1.33758E-06	1.3329E-06	1.33713E-06	1.33713E-06	
n-Pentane	2.22205E-06	2.21459E-06	2.2213E-06	2.2213E-06	
n-Hexane	1.87075E-05	1.86631E-05	1.87012E-05	1.87012E-05	
n-Heptane	1.98405E-05	1.97933E-05	1.98338E-05	1.98338E-05	
n-Octane	9.92061E-06	9.90089E-06	9.91725E-06	9.91725E-06	
n-Nonane	0	0	0	0	
n-Decane	0	0	0	0	
Undecane	0	0	0	0	
Benzene	0.00067622	0.000675371	0.000675992	0.000675992	
Toluene	0.00166518	0.00166323	0.00166462	0.00166462	
Ethylbenzene	0.00233532	0.00233242	0.00233453	0.00233453	
m-Xylene	0.00166739	0.0016653	0.00166683	0.00166683	
Water	1.01056	1.01051	1.01025	1.01025	
MDEA	0.00755888	0.0078472	0.00755633	0.00755633	
Piperazine	0.0128229	0.0138561	0.0128186	0.0128186	
Phosphoric Acid	0	0	0	0	
TEG	98.9627	98.9614	98.963	98.963	

Copyright © 2002-2022 BRE Group, Ltd.
Licensed to Trinity Consultants, Inc. and Affiliates

Process Streams Report
All Streams
Tabulated by Total Phase

Client Name:	Targa Resources	Job: Wildcat II
Location:	DOU	
Flowsheet:	RR1 TEG	

Mass Fraction	31 %	32 %	33 %	34 %
O2	0	0	0	0

Mass Flow	31 lb/h	32 lb/h	33 lb/h	34 lb/h
H2S	0	7.09821E-10	0	0
CO2	0	1.76143E-09	0	0
N2	0	6.66912E-10	0	0
Methane	0	1.95934E-06	1.96224E-06	1.96224E-06
Ethane	0	2.32484E-05	2.33278E-05	2.33278E-05
Propane	0	0.000109638	0.000110058	0.000110058
i-Butane	0	4.67985E-05	4.69833E-05	4.69833E-05
n-Butane	0	0.000321483	0.000322688	0.000322688
i-Pentane	0	0.000300749	0.000301797	0.000301797
n-Pentane	0	0.00049969	0.000501361	0.000501361
n-Hexane	0	0.00421105	0.00422098	0.00422098
n-Heptane	0	0.00446608	0.0044766	0.0044766
n-Octane	0	0.00223399	0.00223838	0.00223838
n-Nonane	0	0	0	0
n-Decane	0	0	0	0
Undecane	0	0	0	0
Benzene	0	0.152388	0.152575	0.152575
Toluene	0	0.375284	0.375714	0.375714
Ethylbenzene	0	0.526276	0.526918	0.526918
m-Xylene	0	0.375751	0.376213	0.376213
Water	0	228.007	228.021	228.021
MDEA	0	1.77061	1.70551	1.70551
Piperazine	0	3.12642	2.89323	2.89323
Phosphoric Acid	0	0	0	0
TEG	0	22329.2	22336.5	22336.5
O2	0	0	0	0

Stream Properties

Property	Units	31	32	33	34
Temperature	°F		218.368	217.53	125 *
Pressure	psia	64.6959	64.6959 *	64.6959	59.6959
Mole Fraction Vapor	%		0	0	0
Mole Fraction Light Liquid	%		100	100	100
Mole Fraction Heavy Liquid	%		0	0	0
Molecular Weight	lb/lbmol	139.789	139.789	139.792	139.792
Mass Density	lb/ft^3		65.0406	65.0718	68.4228
Molar Flow	lbmol/h	0	161.412	161.458	161.458
Mass Flow	lb/h	0	22563.5	22570.6	22570.6
Vapor Volumetric Flow	ft^3/h	0	346.915	346.857	329.87
Liquid Volumetric Flow	gpm	0	43.2517	43.2445	41.1266
Std Vapor Volumetric Flow	MMSCFD	0	1.47008	1.4705	1.4705
Std Liquid Volumetric Flow	sgpm	0	39.9877	40 *	40
Specific Gravity			1.04284	1.04334	1.09707
API Gravity			-6.67507	-6.67571	-6.675
Net Ideal Gas Heating Value	Btu/ft^3	3480.77	3480.77	3480.85	3480.85
Net Liquid Heating Value	Btu/lb	9181.47	9181.52	9181.5	9181.5
Gross Ideal Gas Heating Value	Btu/ft^3	3808.91	3808.91	3809	3809
Gross Liquid Heating Value	Btu/lb	10072.3	10072.3	10072.3	10072.3

Remarks

ProMax 6.0.22251.0
Copyright © 2002-2022 BRE Group, Ltd.
Licensed to Trinity Consultants, Inc. and Affiliates

2 - Amine
Plant Schematic

Client Name:	Targa Resources	Job: Wildcat II
Location:	DOU	
Flowsheet:	2 - Amine	

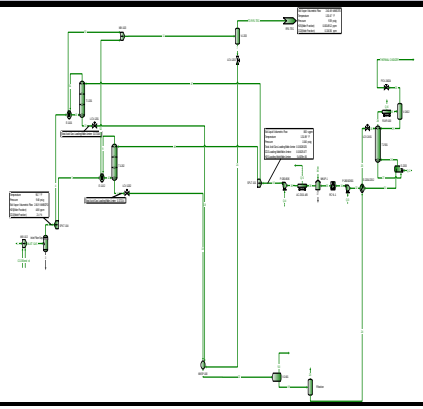

ProMax 6.0.22251.0
Copyright © 2002-2022 BRE Group, Ltd.
Licensed to Trinity Consultants, Inc. and Affiliates

Process Streams Report
All Streams
Tabulated by Total Phase

Client Name:	Targa Resources	Job: Wildcat II	
Location:	DOU		
Flowsheet:	2 - Amine		

Connections

	CO2 Blend	H2S Blend	INLET GAS	THERMAL OXIDIZER	TO RR1 TEG
From Block	--	--	MIX-102	PCV-2402A	V-1203
To Block	MIX-102	MIX-102	Inlet Filter Sep	--	RR1 TEG

Stream Composition

Mole Fraction	CO2 Blend %	H2S Blend %	INLET GAS %	THERMAL OXIDIZER %	TO RR1 TEG %
H2S	0 *	100 *	0.000487998	0.0189064	1.49117E-07
CO2	100 *	0 *	2.39998	92.9874	3.16357E-05
N2	0 *	0 *	1.19343	0.000220751	1.21998
Methane	0 *	0 *	76.4113	0.180021	78.0701
Ethane	0 *	0 *	11.1772	0.0562581	11.4173
Propane	0 *	0 *	5.30026	0.0150337	5.41595
i-Butane	0 *	0 *	0.721309	0.00104458	0.737231
n-Butane	0 *	0 *	1.60472	0.00489252	1.63982
i-Pentane	0 *	0 *	0.361554	0.000241936	0.369599
n-Pentane	0 *	0 *	0.380031	0.000423733	0.388457
n-Hexane	0 *	0 *	0.249162	0.000151591	0.254716
n-Heptane	0 *	0 *	0.136789	1.92157E-05	0.139856
n-Octane	0 *	0 *	0.020788	3.2612E-06	0.0212542
n-Nonane	0 *	0 *	0	0	0
n-Decane	0 *	0 *	0	0	0
Undecane	0 *	0 *	0	0	0
Benzene	0 *	0 *	0.0228358	0.0355983	0.0223438
Toluene	0 *	0 *	0.0119629	0.0165439	0.011767
Ethylbenzene	0 *	0 *	0.00490284	0.00461374	0.0048825
m-Xylene	0 *	0 *	0.00333393	0.00453128	0.00328328
Water	0 *	0 *	0	6.67405	0.283341
MDEA	0 *	0 *	0	4.01528E-08	3.06742E-06
Piperazine	0 *	0 *	0	8.42686E-08	7.04857E-05
TEG	0 *	0 *	0	0	0

Mass Fraction	CO2 Blend %	H2S Blend %	INLET GAS %	THERMAL OXIDIZER %	TO RR1 TEG %
H2S	0 *	100 *	0.000768296	0.0152539	2.40993E-07
CO2	100 *	0 *	4.87925	96.8795	6.60222E-05
N2	0 *	0 *	1.54441	0.000146396	1.62063
Methane	0 *	0 *	56.6276	0.0683684	59.3911
Ethane	0 *	0 *	15.5257	0.0400467	16.2799
Propane	0 *	0 *	10.7967	0.0156936	11.325
i-Butane	0 *	0 *	1.93671	0.00143729	2.03194
n-Butane	0 *	0 *	4.30865	0.00673187	4.51966
i-Pentane	0 *	0 *	1.20504	0.000413229	1.26452
n-Pentane	0 *	0 *	1.26662	0.00072374	1.32904
n-Hexane	0 *	0 *	0.991894	0.000309256	1.04089
n-Heptane	0 *	0 *	0.63318	4.5582E-05	0.664542
n-Octane	0 *	0 *	0.109695	8.81887E-06	0.115129
n-Nonane	0 *	0 *	0	0	0
n-Decane	0 *	0 *	0	0	0
Undecane	0 *	0 *	0	0	0
Benzene	0 *	0 *	0.0824011	0.0658276	0.0827638
Toluene	0 *	0 *	0.0509188	0.0360862	0.0514128
Ethylbenzene	0 *	0 *	0.0240452	0.0115957	0.0245804
m-Xylene	0 *	0 *	0.0163508	0.0113884	0.0165293
Water	0 *	0 *	0	2.84637	0.242057
MDEA	0 *	0 *	0	1.1327E-07	1.73332E-05
Piperazine	0 *	0 *	0	1.71834E-07	0.000287905
TEG	0 *	0 *	0	0	0

Copyright © 2002-2022 BRE Group, Ltd.
Licensed to Trinity Consultants, Inc. and Affiliates

Process Streams Report
All Streams
Tabulated by Total Phase

Client Name:	Targa Resources	Job: Wildcat II
Location:	DOU	
Flowsheet:	2 - Amine	

Mass Flow	CO2 Blend lb/h	H2S Blend lb/h	INLET GAS lb/h	THERMAL OXIDIZER lb/h	TO RR1 TEG lb/h
H2S	0 *	4.49042 *	4.49042	4.47328	0.00134191
CO2	28517.5 *	0 *	28517.5	28410.4	0.367629
N2	0 *	0 *	9026.52	0.0429314	9024.1
Methane	0 *	0 *	330969	20.0494	330706
Ethane	0 *	0 *	90742.6	11.7439	90650.6
Propane	0 *	0 *	63103.1	4.60222	63060.4
i-Butane	0 *	0 *	11319.4	0.421493	11314.4
n-Butane	0 *	0 *	25182.5	1.97416	25166.7
i-Pentane	0 *	0 *	7043.04	0.121182	7041.19
n-Pentane	0 *	0 *	7402.98	0.212241	7400.46
n-Hexane	0 *	0 *	5797.28	0.090691	5795.97
n-Heptane	0 *	0 *	3700.72	0.0133672	3700.35
n-Octane	0 *	0 *	641.131	0.00258618	641.071
n-Nonane	0 *	0 *	0	0	0
n-Decane	0 *	0 *	0	0	0
Undecane	0 *	0 *	0	0	0
Benzene	0 *	0 *	481.606	19.3043	460.851
Toluene	0 *	0 *	297.603	10.5825	286.28
Ethylbenzene	0 *	0 *	140.536	3.40049	136.87
m-Xylene	0 *	0 *	95.5646	3.33971	92.0397
Water	0 *	0 *	0	834.714	1347.84
MDEA	0 *	0 *	0	3.32171E-05	0.0965158
Piperazine	0 *	0 *	0	5.03913E-05	1.60313
TEG	0 *	0 *	0	0	0

Stream Properties

Property	Units	CO2 Blend	H2S Blend	INLET GAS	THERMAL OXIDIZER	TO RR1 TEG
Temperature	°F	92 *	92 *	90.8354	119.507	130.469
Pressure	psia	967.696 *	967.696 *	964.696	21.6959 *	953.696
Mole Fraction Vapor	%	100	0	100	100	100
Mole Fraction Light Liquid	%	0	100	0	0	0
Mole Fraction Heavy Liquid	%	0	0	0	0	0
Molecular Weight	lb/lbmol	44.0095	34.0809	21.6471	42.2414	21.0879
Mass Density	lb/ft^3	13.0549	47.2179	4.45011	0.148462	3.74867
Molar Flow	lbmol/h	647.986	0.131758	26999.7	694.236	26405
Mass Flow	lb/h	28517.5	4.49042	584465	29325.5	556827
Vapor Volumetric Flow	ft^3/h	2184.43	0.0951	131337	197528	148540
Liquid Volumetric Flow	gpm	272.344	0.0118566	16374.5	24626.9	18519.2
Std Vapor Volumetric Flow	MMSCFD	5.90161 *	0.0012 *	245.903	6.32283	240.487
Std Liquid Volumetric Flow	sgpm	69.7636	0.011237	3261.16	71.4922	3191.46
Specific Gravity		1.51953	0.757077	0.747419	1.45849	0.728112
API Gravity			46.0776			
Net Ideal Gas Heating Value	Btu/ft^3	0	586.79	1116.86	5.65492	1141.05
Net Liquid Heating Value	Btu/lb	-74.8536	6332	19517.4	-52.2422	20470.2
Gross Ideal Gas Heating Value	Btu/ft^3	0	637.1	1230.92	9.44587	1257.73
Gross Liquid Heating Value	Btu/lb	-74.8536	6892.4	21517.3	-18.1847	22570.2

Remarks

ProMax 6.0.22251.0
Copyright © 2002-2022 BRE Group, Ltd.
Licensed to Trinity Consultants, Inc. and Affiliates

Process Streams Report
All Streams
Tabulated by Total Phase

Client Name:	Targa Resources	Job: Wildcat II
Location:	DOU	
Flowsheet:	2 - Amine	

Connections

	1	2	3	4	5
From Block	--	Inlet Filter Sep	Inlet Filter Sep	SPLT-104	SPLT-104
To Block	MIX-102	SPLT-104	--	E-1101	E-1102

Stream Composition

Mole Fraction	1 %	2 %	3 %	4 %	5 %
H2S	0 *	0.000487998		0.000487998	0.000487998
CO2	0 *	2.39998		2.39998	2.39998
N2	1.22278 *	1.19343		1.19343	1.19343
Methane	78.2906 *	76.4113		76.4113	76.4113
Ethane	11.4521 *	11.1772		11.1772	11.1772
Propane	5.43062 *	5.30026		5.30026	5.30026
i-Butane	0.73905 *	0.721309		0.721309	0.721309
n-Butane	1.64419 *	1.60472		1.60472	1.60472
i-Pentane	0.370446 *	0.361554		0.361554	0.361554
n-Pentane	0.389378 *	0.380031		0.380031	0.380031
n-Hexane	0.255291 *	0.249162		0.249162	0.249162
n-Heptane	0.140153 *	0.136789		0.136789	0.136789
n-Octane	0.0212993 *	0.020788		0.020788	0.020788
n-Nonane	0 *	0		0	0
n-Decane	0 *	0		0	0
Undecane	0 *	0		0	0
Benzene	0.0233975 *	0.0228358		0.0228358	0.0228358
Toluene	0.0122572 *	0.0119629		0.0119629	0.0119629
Ethylbenzene	0.00502342 *	0.00490284		0.00490284	0.00490284
m-Xylene	0.00341593 *	0.00333393		0.00333393	0.00333393
Water	0 *	0		0	0
MDEA	0 *	0		0	0
Piperazine	0 *	0		0	0
TEG	0 *	0		0	0

Mass Fraction	1 %	2 %	3 %	4 %	5 %
H2S	0 *	0.000768296		0.000768296	0.000768296
CO2	0 *	4.87925		4.87925	4.87925
N2	1.62364 *	1.54441		1.54441	1.54441
Methane	59.5328 *	56.6276		56.6276	56.6276
Ethane	16.3223 *	15.5257		15.5257	15.5257
Propane	11.3506 *	10.7967		10.7967	10.7967
i-Butane	2.03607 *	1.93671		1.93671	1.93671
n-Butane	4.5297 *	4.30865		4.30865	4.30865
i-Pentane	1.26686 *	1.20504		1.20504	1.20504
n-Pentane	1.33161 *	1.26662		1.26662	1.26662
n-Hexane	1.04278 *	0.991894		0.991894	0.991894
n-Heptane	0.665665 *	0.63318		0.63318	0.63318
n-Octane	0.115323 *	0.109695		0.109695	0.109695
n-Nonane	0 *	0		0	0
n-Decane	0 *	0		0	0
Undecane	0 *	0		0	0
Benzene	0.0866286 *	0.0824011		0.0824011	0.0824011
Toluene	0.0535311 *	0.0509188		0.0509188	0.0509188
Ethylbenzene	0.0252788 *	0.0240452		0.0240452	0.0240452
m-Xylene	0.0171896 *	0.0163508		0.0163508	0.0163508
Water	0 *	0		0	0
MDEA	0 *	0		0	0
Piperazine	0 *	0		0	0
TEG	0 *	0		0	0

Copyright © 2002-2022 BRE Group, Ltd.
Licensed to Trinity Consultants, Inc. and Affiliates

Process Streams Report
All Streams
Tabulated by Total Phase

Client Name:	Targa Resources	Job: Wildcat II
Location:	DOU	
Flowsheet:	2 - Amine	

Mass Flow	1 lb/h	2 lb/h	3 lb/h	4 lb/h	5 lb/h
H2S	0 *	4.49042	0	2.24521	2.24521
CO2	0 *	28517.5	0	14258.8	14258.8
N2	9026.52 *	9026.52	0	4513.26	4513.26
Methane	330969 *	330969	0	165484	165484
Ethane	90742.6 *	90742.6	0	45371.3	45371.3
Propane	63103.1 *	63103.1	0	31551.6	31551.6
i-Butane	11319.4 *	11319.4	0	5659.69	5659.69
n-Butane	25182.5 *	25182.5	0	12591.3	12591.3
i-Pentane	7043.04 *	7043.04	0	3521.52	3521.52
n-Pentane	7402.98 *	7402.98	0	3701.49	3701.49
n-Hexane	5797.28 *	5797.28	0	2898.64	2898.64
n-Heptane	3700.72 *	3700.72	0	1850.36	1850.36
n-Octane	641.131 *	641.131	0	320.565	320.565
n-Nonane	0 *	0	0	0	0
n-Decane	0 *	0	0	0	0
Undecane	0 *	0	0	0	0
Benzene	481.606 *	481.606	0	240.803	240.803
Toluene	297.603 *	297.603	0	148.801	148.801
Ethylbenzene	140.536 *	140.536	0	70.268	70.268
m-Xylene	95.5646 *	95.5646	0	47.7823	47.7823
Water	0 *	0	0	0	0
MDEA	0 *	0	0	0	0
Piperazine	0 *	0	0	0	0
TEG	0 *	0	0	0	0

Stream Properties

Property	Units	1	2	3	4	5
Temperature	°F	92 *	90.7001		90.7001	90.7001
Pressure	psia	964.696 *	962.696	962.696	962.696	962.696
Mole Fraction Vapor	%	100	100		100	100
Mole Fraction Light Liquid	%	0	0		0	0
Mole Fraction Heavy Liquid	%	0	0		0	0
Molecular Weight	lb/lbmol	21.0972	21.6471		21.6471	21.6471
Mass Density	lb/ft^3	4.31035	4.44112		4.44112	4.44112
Molar Flow	lbmol/h	26351.6	26999.7	0	13499.8	13499.8
Mass Flow	lb/h	555943	584465	0	292233	292233
Vapor Volumetric Flow	ft^3/h	128979	131603	0	65801.7	65801.7
Liquid Volumetric Flow	gpm	16080.5	16407.7	0	8203.84	8203.84
Std Vapor Volumetric Flow	MMSCFD	240 *	245.903	0	122.951	122.951
Std Liquid Volumetric Flow	sgpm	3191.38	3261.16	0	1630.58	1630.58
Specific Gravity		0.728431	0.747419		0.747419	0.747419
API Gravity						
Net Ideal Gas Heating Value	Btu/ft^3	1144.32	1116.86		1116.86	1116.86
Net Liquid Heating Value	Btu/lb	20522.5	19517.4		19517.4	19517.4
Gross Ideal Gas Heating Value	Btu/ft^3	1261.19	1230.92		1230.92	1230.92
Gross Liquid Heating Value	Btu/lb	22625	21517.3		21517.3	21517.3

Remarks

ProMax 6.0.22251.0
Copyright © 2002-2022 BRE Group, Ltd.
Licensed to Trinity Consultants, Inc. and Affiliates

Process Streams Report
All Streams
Tabulated by Total Phase

Client Name:	Targa Resources	Job: Wildcat II
Location:	DOU	
Flowsheet:	2 - Amine	

Connections

	7	9	11	13	14
From Block	V-1203	T-1202	MIX-103	T-1201	T-1202
To Block	LCV-1203	E-1102	V-1203	LCV-1201	LCV-1202

Stream Composition

Mole Fraction	7 %	9 %	11 %	13 %	14 %
H2S	2.80405E-05	1.84674E-07	1.84674E-07	0.00105418	0.00105418
CO2	0.0170161	5.32881E-05	5.32881E-05	4.83892	4.83892
N2	0.000712948	1.21842	1.21842	0.000642462	0.000642462
Methane	0.0738888	77.9706	77.9706	0.122179	0.122179
Ethane	0.0086641	11.4028	11.4028	0.0228161	0.0228161
Propane	0.00244946	5.40905	5.40905	0.00723428	0.00723428
i-Butane	0.000175401	0.736292	0.736292	0.000636421	0.000636421
n-Butane	0.000566313	1.63774	1.63774	0.00203753	0.00203753
i-Pentane	4.71059E-05	0.369128	0.369128	0.000192052	0.000192052
n-Pentane	6.31199E-05	0.387962	0.387962	0.00026058	0.00026058
n-Hexane	1.77983E-05	0.254392	0.254392	0.000113381	0.000113381
n-Heptane	4.42794E-06	0.139677	0.139677	2.78492E-05	2.78492E-05
n-Octane	4.81875E-07	0.0212271	0.0212271	3.93454E-06	3.93454E-06
n-Nonane	0	0	0	0	0
n-Decane	0	0	0	0	0
Undecane	0	0	0	0	0
Benzene	0.000499409	0.022316	0.022316	0.00198166	0.00198166
Toluene	0.000154664	0.0117522	0.0117522	0.000916691	0.000916691
Ethylbenzene	3.85613E-05	0.00487632	0.00487632	0.000257567	0.000257567
m-Xylene	3.77569E-05	0.00327914	0.00327914	0.000247681	0.000247681
Water	99.2464	0.409503	0.409503	82.0016	82.0016
MDEA	0.261847	0.000336875	0.000336875	11.2679	11.2679
Piperazine	0.387353	0.000564207	0.000564207	1.73102	1.73102
TEG	0	0	0	0	0

Mass Fraction	7 %	9 %	11 %	13 %	14 %
H2S	5.15184E-05	2.98503E-07	2.98503E-07	0.00112782	0.00112782
CO2	0.0403713	0.000111227	0.000111227	6.68511	6.68511
N2	0.00107669	1.61881	1.61881	0.000564972	0.000564972
Methane	0.0639022	59.3246	59.3246	0.0615291	0.0615291
Ethane	0.0140446	16.2616	16.2616	0.0215365	0.0215365
Propane	0.00582281	11.3123	11.3123	0.0100139	0.0100139
i-Butane	0.000549593	2.02967	2.02967	0.00116118	0.00116118
n-Butane	0.00177445	4.51459	4.51459	0.00371758	0.00371758
i-Pentane	0.000183219	1.2631	1.2631	0.000434972	0.000434972
n-Pentane	0.000245505	1.32755	1.32755	0.000590178	0.000590178
n-Hexane	8.2685E-05	1.03973	1.03973	0.000306716	0.000306716
n-Heptane	2.39191E-05	0.663797	0.663797	8.75996E-05	8.75996E-05
n-Octane	2.96739E-06	0.115	0.115	1.41085E-05	1.41085E-05
n-Nonane	0	0	0	0	0
n-Decane	0	0	0	0	0
Undecane	0	0	0	0	0
Benzene	0.002103	0.0826733	0.0826733	0.00485914	0.00485914
Toluene	0.000768239	0.051356	0.051356	0.00265141	0.00265141
Ethylbenzene	0.000220698	0.0245531	0.0245531	0.000858391	0.000858391
m-Xylene	0.000216095	0.016511	0.016511	0.000825445	0.000825445
Water	96.3878	0.349889	0.349889	46.3743	46.3743
MDEA	1.6821	0.00190388	0.00190388	42.1498	42.1498
Piperazine	1.79869	0.00230491	0.00230491	4.68057	4.68057
TEG	0	0	0	0	0

Copyright © 2002-2022 BRE Group, Ltd.
Licensed to Trinity Consultants, Inc. and Affiliates

Process Streams Report
All Streams
Tabulated by Total Phase

Client Name:	Targa Resources	Job: Wildcat II
Location:	DOU	
Flowsheet:	2 - Amine	

Mass Flow	7 lb/h	9 lb/h	11 lb/h	13 lb/h	14 lb/h
H2S	0.0003221	0.000832006	0.00166401	2.40715	2.40715
CO2	0.252407	0.310018	0.620036	14268.2	14268.2
N2	0.0067316	4512.05	9024.11	1.20584	1.20584
Methane	0.399525	165353	330706	131.323	131.323
Ethane	0.0878086	45325.3	90650.7	45.966	45.966
Propane	0.036405	31530.2	63060.4	21.373	21.373
i-Butane	0.00343613	5657.21	11314.4	2.47835	2.47835
n-Butane	0.0110941	12583.3	25166.7	7.93454	7.93454
i-Pentane	0.00114551	3520.59	7041.19	0.928373	0.928373
n-Pentane	0.00153493	3700.23	7400.46	1.25963	1.25963
n-Hexane	0.000516958	2897.99	5795.97	0.654632	0.654632
n-Heptane	0.000149545	1850.17	3700.35	0.186966	0.186966
n-Octane	1.85525E-05	320.535	641.071	0.0301123	0.0301123
n-Nonane	0	0	0	0	0
n-Decane	0	0	0	0	0
Undecane	0	0	0	0	0
Benzene	0.0131482	230.432	460.864	10.371	10.371
Toluene	0.00480313	143.142	286.285	5.65899	5.65899
Ethylbenzene	0.00137984	68.4359	136.872	1.83209	1.83209
m-Xylene	0.00135105	46.0205	92.0411	1.76177	1.76177
Water	602.629	975.233	1950.47	98977.9	98977.9
MDEA	10.5167	5.30662	10.6132	89961.5	89961.5
Piperazine	11.2456	6.42439	12.8488	9989.88	9989.88
TEG	0	0	0	0	0

Stream Properties

Property	Units	7	9	11	13	14
Temperature	°F	130.469	149.612	130.524	139.86	139.86
Pressure	psia	953.696	956.696	954.696	958.696	958.696
Mole Fraction Vapor	%	0	100	99.8727	0	0
Mole Fraction Light Liquid	%	100	0	0.127318	100	100
Mole Fraction Heavy Liquid	%	0	0	0	0	0
Molecular Weight	lb/lbmol	18.5496	21.0847	21.0847	31.8556	31.8556
Mass Density	lb/ft^3	61.6806	3.56446	3.75651	69.2832	69.2832
Molar Flow	lbmol/h	33.705	13219.4	26438.7	6700.01	6700.01
Mass Flow	lb/h	625.213	278726	557452	213433	213433
Vapor Volumetric Flow	ft^3/h	10.1363	78195.8	148396	3080.59	3080.59
Liquid Volumetric Flow	gpm	1.26375	9749.08	18501.3	384.073	384.073
Std Vapor Volumetric Flow	MMSCFD	0.306972	120.397	240.794	61.0211	61.0211
Std Liquid Volumetric Flow	sgpm	1.2601	1596.36	3192.72	434.22	434.22
Specific Gravity		0.988967	0.728		1.11086	1.11086
API Gravity		9.57898			-5.51156	-5.51156
Net Ideal Gas Heating Value	Btu/ft^3	22.6211	1139.63	1139.63	460.265	460.265
Net Liquid Heating Value	Btu/lb	-569.023	20446.6	20446.6	4830.51	4830.51
Gross Ideal Gas Heating Value	Btu/ft^3	74.4767	1256.22	1256.22	542.868	542.868
Gross Liquid Heating Value	Btu/lb	491.829	22545.5	22545.5	5814.53	5814.53

Remarks

ProMax 6.0.22251.0
Copyright © 2002-2022 BRE Group, Ltd.
Licensed to Trinity Consultants, Inc. and Affiliates

Process Streams Report
All Streams
Tabulated by Total Phase

Client Name:	Targa Resources	Job: Wildcat II
Location:	DOU	
Flowsheet:	2 - Amine	

Connections

	18	19	21	22	23
From Block	LCV-1201	LCV-1202	LCV-1203	MXSP-100	Filtration
To Block	MXSP-100	MXSP-100	MXSP-100	V-2401	--

Stream Composition

Mole Fraction	18 %	19 %	21 %	22 %	23 %
H2S	0.00105418	0.00105418	2.80405E-05	0.00105161	0.00225962
CO2	4.83892	4.83892	0.0170161	4.82682	12.0135
N2	0.000642462	0.000642462	0.000712948	0.000642639	0.283732
Methane	0.122179	0.122179	0.0738888	0.122058	65.9716
Ethane	0.0228161	0.0228161	0.0086641	0.0227806	12.2039
Propane	0.00723428	0.00723428	0.00244946	0.00722227	3.89379
i-Butane	0.000636421	0.000636421	0.000175401	0.000635264	0.342505
n-Butane	0.00203753	0.00203753	0.000566313	0.00203384	1.08763
i-Pentane	0.000192052	0.000192052	4.71059E-05	0.000191688	0.102134
n-Pentane	0.00026058	0.00026058	6.31199E-05	0.000260084	0.13995
n-Hexane	0.000113381	0.000113381	1.77983E-05	0.000113141	0.0603881
n-Heptane	2.78492E-05	2.78492E-05	4.42794E-06	2.77904E-05	0.0138729
n-Octane	3.93454E-06	3.93454E-06	4.81875E-07	3.92588E-06	0.00200492
n-Nonane	0	0	0	0	0
n-Decane	0	0	0	0	0
Undecane	0	0	0	0	0
Benzene	0.00198166	0.00198166	0.000499409	0.00197794	0.0912254
Toluene	0.000916691	0.000916691	0.000154664	0.000914779	0.0393997
Ethylbenzene	0.000257567	0.000257567	3.85613E-05	0.000257017	0.0122145
m-Xylene	0.000247681	0.000247681	3.77569E-05	0.000247154	0.0085364
Water	82.0016	82.0016	99.2464	82.0448	3.73093
MDEA	11.2679	11.2679	0.261847	11.2403	0.00037926
Piperazine	1.73102	1.73102	0.387353	1.72765	2.34614E-05
TEG	0	0	0	0	0

Mass Fraction	18 %	19 %	21 %	22 %	23 %
H2S	0.00112782	0.00112782	5.15184E-05	0.00112625	0.00331743
CO2	6.68511	6.68511	0.0403713	6.67539	22.7757
N2	0.000564972	0.000564972	0.00107669	0.000565721	0.342397
Methane	0.0615291	0.0615291	0.0639022	0.0615325	45.5914
Ethane	0.0215365	0.0215365	0.0140446	0.0215256	15.8079
Propane	0.0100139	0.0100139	0.00582281	0.0100078	7.39645
i-Butane	0.00116118	0.00116118	0.000549593	0.00116029	0.857559
n-Butane	0.00371758	0.00371758	0.00177445	0.00371474	2.7232
i-Pentane	0.000434972	0.000434972	0.000183219	0.000434604	0.317434
n-Pentane	0.000590178	0.000590178	0.000245505	0.000589674	0.434967
n-Hexane	0.000306716	0.000306716	8.2685E-05	0.000306388	0.224176
n-Heptane	8.75996E-05	8.75996E-05	2.39191E-05	8.75065E-05	0.0598822
n-Octane	1.41085E-05	1.41085E-05	2.96739E-06	1.40922E-05	0.00986567
n-Nonane	0	0	0	0	0
n-Decane	0	0	0	0	0
Undecane	0	0	0	0	0
Benzene	0.00485914	0.00485914	0.002103	0.00485511	0.306964
Toluene	0.00265141	0.00265141	0.000768239	0.00264866	0.156383
Ethylbenzene	0.000858391	0.000858391	0.000220698	0.000857458	0.0558615
m-Xylene	0.000825445	0.000825445	0.000216095	0.000824553	0.0390401
Water	46.3743	46.3743	96.3878	46.4474	2.89543
MDEA	42.1498	42.1498	1.6821	42.0906	0.00194684
Piperazine	4.68057	4.68057	1.79869	4.67636	8.70548E-05
TEG	0	0	0	0	0

Copyright © 2002-2022 BRE Group, Ltd.
Licensed to Trinity Consultants, Inc. and Affiliates

Process Streams Report
All Streams
Tabulated by Total Phase

Client Name:	Targa Resources	Job: Wildcat II
Location:	DOU	
Flowsheet:	2 - Amine	

Mass Flow	18 lb/h	19 lb/h	21 lb/h	22 lb/h	23 lb/h
H2S	2.40715	2.40715	0.0003221	4.81461	0.000203521
CO2	14268.2	14268.2	0.252407	28536.7	1.39727
N2	1.20584	1.20584	0.0067316	2.41841	0.0210057
Methane	131.323	131.323	0.399525	263.046	2.79699
Ethane	45.966	45.966	0.0878086	92.0198	0.969798
Propane	21.373	21.373	0.036405	42.7824	0.453765
i-Butane	2.47835	2.47835	0.00343613	4.96013	0.0526104
n-Butane	7.93454	7.93454	0.0110941	15.8802	0.167066
i-Pentane	0.928373	0.928373	0.00114551	1.85789	0.0194742
n-Pentane	1.25963	1.25963	0.00153493	2.5208	0.0266848
n-Hexane	0.654632	0.654632	0.000516958	1.30978	0.013753
n-Heptane	0.186966	0.186966	0.000149545	0.374082	0.00367371
n-Octane	0.0301123	0.0301123	1.85525E-05	0.0602431	0.000605248
n-Nonane	0	0	0	0	0
n-Decane	0	0	0	0	0
Undecane	0	0	0	0	0
Benzene	10.371	10.371	0.0131482	20.7552	0.018832
Toluene	5.65899	5.65899	0.00480313	11.3228	0.00959392
Ethylbenzene	1.83209	1.83209	0.00137984	3.66556	0.00342704
m-Xylene	1.76177	1.76177	0.00135105	3.52489	0.00239507
Water	98977.9	98977.9	602.629	198558	0.177632
MDEA	89961.5	89961.5	10.5167	179933	0.000119437
Piperazine	9989.88	9989.88	11.2456	19991	5.34072E-06
TEG	0	0	0	0	0

Stream Properties

Property	Units	18	19	21	22	23
Temperature	°F	142.484	142.484	132.555	142.472	142.494
Pressure	psia	79.6959 *	79.6959 *	79.6959 *	79.6959	71.6959
Mole Fraction Vapor	%	0.164785	0.164785	0.0802631	0.164542	100
Mole Fraction Light Liquid	%	99.8352	99.8352	99.9197	99.8355	0
Mole Fraction Heavy Liquid	%	0	0	0	0	0
Molecular Weight	lb/lbmol	31.8556	31.8556	18.5496	31.8222	23.2137
Mass Density	lb/ft^3	53.8858	53.8858	50.9738	53.8804	0.260727
Molar Flow	lbmol/h	6700.01	6700.01	33.705	13433.7	0.264279
Mass Flow	lb/h	213433	213433	625.213	427491	6.1349
Vapor Volumetric Flow	ft^3/h	3960.84	3960.84	12.2654	7934.07	23.53
Liquid Volumetric Flow	gpm	493.818	493.818	1.52919	989.183	2.93361
Std Vapor Volumetric Flow	MMSCFD	61.0211	61.0211	0.306972	122.349	0.00240695
Std Liquid Volumetric Flow	sgpm	434.22	434.22	1.2601	869.7	0.0307397
Specific Gravity						0.80151
API Gravity						
Net Ideal Gas Heating Value	Btu/ft^3	460.265	460.265	22.6211	459.167	949.154
Net Liquid Heating Value	Btu/lb	4830.51	4830.51	-569.023	4822.62	15424.1
Gross Ideal Gas Heating Value	Btu/ft^3	542.868	542.868	74.4767	541.693	1048.5
Gross Liquid Heating Value	Btu/lb	5814.53	5814.53	491.829	5806.75	17048.4

Remarks

ProMax 6.0.22251.0
Copyright © 2002-2022 BRE Group, Ltd.
Licensed to Trinity Consultants, Inc. and Affiliates

Process Streams Report
All Streams
Tabulated by Total Phase

Client Name:	Targa Resources	Job: Wildcat II
Location:	DOU	
Flowsheet:	2 - Amine	

Connections

	24	25	26	27	28
From Block	Filtration	E-2201/2202	E-2203	T-2501	T-2501
To Block	E-2201/2202	LCV-2401	T-2501	E-2203	FAXR-100

Stream Composition

Mole Fraction	24 %	25 %	26 %	27 %	28 %
H2S	0.00104996	0.00104996	4.65997E-05	6.6217E-05	0.00337728
CO2	4.81679	4.81679	0.00943014	0.00535028	16.4671
N2	1.14271E-05	1.14271E-05	0	0	3.88164E-05
Methane	0.00931875	0.00931875	0	0	0.0316568
Ethane	0.00291219	0.00291219	0	0	0.00989318
Propane	0.000778215	0.000778215	0	0	0.00264362
i-Butane	5.40724E-05	5.40724E-05	0	0	0.000183677
n-Butane	0.00025326	0.00025326	0	0	0.000860327
i-Pentane	1.25238E-05	1.25238E-05	0	0	4.25408E-05
n-Pentane	2.19345E-05	2.19345E-05	0	0	7.45082E-05
n-Hexane	7.84709E-06	7.84709E-06	0	0	2.66546E-05
n-Heptane	9.94697E-07	9.94697E-07	0	0	3.37867E-06
n-Octane	1.68815E-07	1.68815E-07	0	0	5.7341E-07
n-Nonane	0	0	0	0	0
n-Decane	0	0	0	0	0
Undecane	0	0	0	0	0
Benzene	0.00184274	0.00184274	0	0	0.00633037
Toluene	0.000856394	0.000856394	0	0	0.00293375
Ethylbenzene	0.000238829	0.000238829	0	0	0.000816866
m-Xylene	0.000234561	0.000234561	0	0	0.000805033
Water	82.1761	82.1761	99.8177	90.5323	83.4036
MDEA	11.259	11.259	0.0709718	8.17695	0.0348617
Piperazine	1.73053	1.73053	0.101807	1.28528	0.0347234
TEG	0	0	0	0	0

Mass Fraction	24 %	25 %	26 %	27 %	28 %
H2S	0.00112395	0.00112395	8.74592E-05	8.30813E-05	0.0051466
CO2	6.65838	6.65838	0.0228547	0.00866853	32.4046
N2	1.00547E-05	1.00547E-05	0	0	4.86209E-05
Methane	0.00469563	0.00469563	0	0	0.0227081
Ethane	0.00275045	0.00275045	0	0	0.0133014
Propane	0.00107785	0.00107785	0	0	0.00521239
i-Butane	9.87149E-05	9.87149E-05	0	0	0.000477353
n-Butane	0.000462353	0.000462353	0	0	0.00223588
i-Pentane	2.83811E-05	2.83811E-05	0	0	0.000137239
n-Pentane	4.97074E-05	4.97074E-05	0	0	0.000240367
n-Hexane	2.12401E-05	2.12401E-05	0	0	0.000102706
n-Heptane	3.13063E-06	3.13063E-06	0	0	1.51378E-05
n-Octane	6.05691E-07	6.05691E-07	0	0	2.92875E-06
n-Nonane	0	0	0	0	0
n-Decane	0	0	0	0	0
Undecane	0	0	0	0	0
Benzene	0.00452112	0.00452112	0	0	0.02211
Toluene	0.00247844	0.00247844	0	0	0.0120867
Ethylbenzene	0.000796405	0.000796405	0	0	0.0038777
m-Xylene	0.00078217	0.00078217	0	0	0.00382153
Water	46.4998	46.4998	99.0284	60.0437	67.1844
MDEA	42.141	42.141	0.465731	35.8718	0.18575
Piperazine	4.68196	4.68196	0.482917	4.07572	0.133736
TEG	0	0	0	0	0

Copyright © 2002-2022 BRE Group, Ltd.
Licensed to Trinity Consultants, Inc. and Affiliates

Process Streams Report
All Streams
Tabulated by Total Phase

Client Name:	Targa Resources	Job: Wildcat II
Location:	DOU	
Flowsheet:	2 - Amine	

Mass Flow	24 lb/h	25 lb/h	26 lb/h	27 lb/h	28 lb/h
H2S	4.79905	4.79905	0.092107	0.417873	4.54471
CO2	28430	28430	24.0693	43.6	28614.9
N2	0.0429314	0.0429314	0	0	0.0429347
Methane	20.0494	20.0494	0	0	20.0524
Ethane	11.7439	11.7439	0	0	11.7458
Propane	4.60222	4.60222	0	0	4.6028
i-Butane	0.421493	0.421493	0	0	0.421527
n-Butane	1.97416	1.97416	0	0	1.97439
i-Pentane	0.121182	0.121182	0	0	0.121189
n-Pentane	0.212241	0.212241	0	0	0.212256
n-Hexane	0.090691	0.090691	0	0	0.0906949
n-Heptane	0.0133672	0.0133672	0	0	0.0133675
n-Octane	0.00258618	0.00258618	0	0	0.00258623
n-Nonane	0	0	0	0	0
n-Decane	0	0	0	0	0
Undecane	0	0	0	0	0
Benzene	19.3043	19.3043	0	0	19.5242
Toluene	10.5825	10.5825	0	0	10.6731
Ethylbenzene	3.40049	3.40049	0	0	3.42421
m-Xylene	3.33971	3.33971	0	0	3.37461
Water	198545	198545	104291	302001	59327.2
MDEA	179933	179933	490.482	180424	164.027
Piperazine	19991	19991	508.58	20499.6	118.095
TEG	0	0	0	0	0

Stream Properties

Property	Units	24	25	26	27	28
Temperature	°F	142.494	210 *	255.841	253.327	239.159
Pressure	psia	71.6959	68.6959	28.6959	28.6959	26.6959
Mole Fraction Vapor	%	0	0.576641	100	0	100
Mole Fraction Light Liquid	%	100	99.4234	0	100	0
Mole Fraction Heavy Liquid	%	0	0	0	0	0
Molecular Weight	lb/lbmol	31.8372	31.8372	18.1589	27.163	22.3644
Mass Density	lb/ft^3	69.2529	30.0027	0.0688545	60.2001	0.080549
Molar Flow	lbmol/h	13411.3	13411.3	5799.6	18516.7	3948.46
Mass Flow	lb/h	426980	426980	105314	502969	88305.1
Vapor Volumetric Flow	ft^3/h	6165.52	14231.4	1.52952E+06	8354.96	1.09629E+06
Liquid Volumetric Flow	gpm	768.688	1774.3	190693	1041.66	136680
Std Vapor Volumetric Flow	MMSCFD	122.145	122.145	52.8206	168.643	35.9611
Std Liquid Volumetric Flow	sgpm	867.097	867.097	210.896	1006.5	189.566
Specific Gravity		1.11038		0.626979	0.965228	0.772185
API Gravity		-5.5279			4.8986	
Net Ideal Gas Heating Value	Btu/ft^3	458.332	458.332	5.77966	333.56	3.35153
Net Liquid Heating Value	Btu/lb	4809.41	4809.41	-931.497	3890.81	-680.469
Gross Ideal Gas Heating Value	Btu/ft^3	540.828	540.828	56.4857	409.05	45.5894
Gross Liquid Heating Value	Btu/lb	5792.72	5792.72	128.157	4945.45	36.232

Remarks

ProMax 6.0.22251.0
Copyright © 2002-2022 BRE Group, Ltd.
Licensed to Trinity Consultants, Inc. and Affiliates

Process Streams Report
All Streams
Tabulated by Total Phase

Client Name:	Targa Resources	Job: Wildcat II
Location:	DOU	
Flowsheet:	2 - Amine	

Connections

	29	30	31	32	33
From Block	V-2402	LCV-2401	E-2203	E-2201/2202	V-2402
To Block	T-2501	T-2501	E-2201/2202	P-2600/2601	PCV-2402A

Stream Composition

Mole Fraction	29 %	30 %	31 %	32 %	33 %
H2S	6.44031E-05	0.00104996	7.51634E-05	7.51634E-05	0.0189064
CO2	0.142792	4.81679	0.00348967	0.00348967	92.9874
N2	3.60841E-09	1.14271E-05	0	0	0.000220751
Methane	5.68737E-06	0.00931875	0	0	0.180021
Ethane	1.98253E-06	0.00291219	0	0	0.0562581
Propane	4.06657E-07	0.000778215	0	0	0.0150337
i-Butane	1.78112E-08	5.40724E-05	0	0	0.00104458
n-Butane	1.25692E-07	0.00025326	0	0	0.00489252
i-Pentane	3.13385E-09	1.25238E-05	0	0	0.000241936
n-Pentane	6.77556E-09	2.19345E-05	0	0	0.000423733
n-Hexane	1.3713E-09	7.84709E-06	0	0	0.000151591
n-Heptane	1.0031E-10	9.94697E-07	0	0	1.92157E-05
n-Octane	1.46191E-11	1.68815E-07	0	0	3.2612E-06
n-Nonane	0	0	0	0	0
n-Decane	0	0	0	0	0
Undecane	0	0	0	0	0
Benzene	8.65297E-05	0.00184274	0	0	0.0355983
Toluene	3.02388E-05	0.000856394	0	0	0.0165439
Ethylbenzene	6.86533E-06	0.000238829	0	0	0.00461374
m-Xylene	1.01004E-05	0.000234561	0	0	0.00453128
Water	99.7726	82.1761	86.2978	86.2978	6.67405
MDEA	0.0422988	11.259	11.8737	11.8737	4.01528E-08
Piperazine	0.042131	1.73053	1.825	1.825	8.42686E-08
TEG	0	0	0	0	0

Mass Fraction	29 %	30 %	31 %	32 %	33 %
H2S	0.000121105	0.00112395	8.19219E-05	8.19219E-05	0.0152539
CO2	0.346733	6.65838	0.00491149	0.00491149	96.8795
N2	5.57735E-09	1.00547E-05	0	0	0.000146396
Methane	5.03418E-06	0.00469563	0	0	0.0683684
Ethane	3.28916E-06	0.00275045	0	0	0.0400467
Propane	9.89396E-07	0.00107785	0	0	0.0156936
i-Butane	5.7119E-08	9.87149E-05	0	0	0.00143729
n-Butane	4.03084E-07	0.000462353	0	0	0.00673187
i-Pentane	1.24754E-08	2.83811E-05	0	0	0.000413229
n-Pentane	2.69724E-08	4.97074E-05	0	0	0.00072374
n-Hexane	6.52019E-09	2.12401E-05	0	0	0.000309256
n-Heptane	5.54582E-10	3.13063E-06	0	0	4.5582E-05
n-Octane	9.21387E-11	6.05691E-07	0	0	8.81887E-06
n-Nonane	0	0	0	0	0
n-Decane	0	0	0	0	0
Undecane	0	0	0	0	0
Benzene	0.000372931	0.00452112	0	0	0.0658276
Toluene	0.000153728	0.00247844	0	0	0.0360862
Ethylbenzene	4.02151E-05	0.000796405	0	0	0.0115957
m-Xylene	5.91649E-05	0.00078217	0	0	0.0113884
Water	99.1742	46.4998	49.7191	49.7191	2.84637
MDEA	0.278108	42.141	45.2487	45.2487	1.1327E-07
Piperazine	0.200231	4.68196	5.02723	5.02723	1.71834E-07
TEG	0	0	0	0	0

ProMax 6.0.22251.0
Copyright © 2002-2022 BRE Group, Ltd.
Licensed to Trinity Consultants, Inc. and Affiliates

Process Streams Report
All Streams
Tabulated by Total Phase

Client Name:	Targa Resources	Job: Wildcat II
Location:	DOU	
Flowsheet:	2 - Amine	

Mass Flow	29 lb/h	30 lb/h	31 lb/h	32 lb/h	33 lb/h
H2S	0.0714275	4.79905	0.325766	0.325766	4.47328
CO2	204.502	28430	19.5307	19.5307	28410.4
N2	3.2895E-06	0.0429314	0	0	0.0429314
Methane	0.00296914	20.0494	0	0	20.0494
Ethane	0.00193993	11.7439	0	0	11.7439
Propane	0.000583541	4.60222	0	0	4.60222
i-Butane	3.36886E-05	0.421493	0	0	0.421493
n-Butane	0.000237737	1.97416	0	0	1.97416
i-Pentane	7.35793E-06	0.121182	0	0	0.121182
n-Pentane	1.59082E-05	0.212241	0	0	0.212241
n-Hexane	3.84558E-06	0.090691	0	0	0.090691
n-Heptane	3.2709E-07	0.0133672	0	0	0.0133672
n-Octane	5.4343E-08	0.00258618	0	0	0.00258618
n-Nonane	0	0	0	0	0
n-Decane	0	0	0	0	0
Undecane	0	0	0	0	0
Benzene	0.219953	19.3043	0	0	19.3043
Toluene	0.0906679	10.5825	0	0	10.5825
Ethylbenzene	0.0237187	3.40049	0	0	3.40049
m-Xylene	0.0348952	3.33971	0	0	3.33971
Water	58492.5	198545	197710	197710	834.714
MDEA	164.027	179933	179933	179933	3.32171E-05
Piperazine	118.095	19991	19991	19991	5.03913E-05
TEG	0	0	0	0	0

Stream Properties

Property	Units	29	30	31	32	33
Temperature	°F	120	194.568	255.841	190.106	120
Pressure	psia	25.6959	26.6959 *	28.6959	25.6959	25.6959
Mole Fraction Vapor	%	0	2.15566	0	0	100
Mole Fraction Light Liquid	%	100	97.8443	100	100	0
Mole Fraction Heavy Liquid	%	0	0	0	0	0
Molecular Weight	lb/lbmol	18.124	31.8372	31.2692	31.2692	42.2414
Mass Density	lb/ft^3	61.745	5.22741	60.2819	62.3466	0.175904
Molar Flow	lbmol/h	3254.23	13411.3	12717.1	12717.1	694.236
Mass Flow	lb/h	58979.6	426980	397654	397654	29325.5
Vapor Volumetric Flow	ft^3/h	955.212	81680.9	6596.58	6378.13	166713
Liquid Volumetric Flow	gpm	119.091	10183.6	822.431	795.195	20785
Std Vapor Volumetric Flow	MMSCFD	29.6383	122.145	115.823	115.823	6.32283
Std Liquid Volumetric Flow	sgpm	118.074	867.097	795.605	795.605	71.4922
Specific Gravity		0.99		0.96654	0.999645	1.45849
API Gravity		9.81916		3.96979	3.97032	
Net Ideal Gas Heating Value	Btu/ft^3	2.86013	458.332	483.044	483.044	5.65492
Net Liquid Heating Value	Btu/lb	-992.833	4809.41	5167.94	5167.94	-52.2422
Gross Ideal Gas Heating Value	Btu/ft^3	53.3	540.828	569.836	569.836	9.44587
Gross Liquid Heating Value	Btu/lb	63.2889	5792.72	6221.26	6221.26	-18.1847

Remarks

ProMax 6.0.22251.0
Copyright © 2002-2022 BRE Group, Ltd.
Licensed to Trinity Consultants, Inc. and Affiliates

Process Streams Report
All Streams
Tabulated by Total Phase

Client Name:	Targa Resources	Job: Wildcat II
Location:	DOU	
Flowsheet:	2 - Amine	

Connections

	34	35	36	37	38
From Block	P-2600/2601	RCYL-1	--	MKUP-1	MKUP-1
To Block	RCYL-1	MKUP-1	MKUP-1	--	AC-2301 A/B

Stream Composition

Mole Fraction	34 %	35 %	36 %	37 %	38 %
H2S	7.51634E-05	7.51096E-05	0	7.51096E-05	7.43962E-05
CO2	0.00348967	0.00348999	0	0.00348999	0.00345684
N2	0	0	0	0	0
Methane	0	0	0	0	0
Ethane	0	0	0	0	0
Propane	0	0	0	0	0
i-Butane	0	0	0	0	0
n-Butane	0	0	0	0	0
i-Pentane	0	0	0	0	0
n-Pentane	0	0	0	0	0
n-Hexane	0	0	0	0	0
n-Heptane	0	0	0	0	0
n-Octane	0	0	0	0	0
n-Nonane	0	0	0	0	0
n-Decane	0	0	0	0	0
Undecane	0	0	0	0	0
Benzene	0	0	0	0	0
Toluene	0	0	0	0	0
Ethylbenzene	0	0	0	0	0
m-Xylene	0	0	0	0	0
Water	86.2978	86.2977	99.9839	86.2977	86.4277
MDEA	11.8737	11.8737	0.000740014	11.8737	11.7609
Piperazine	1.825	1.82501	0.0153178	1.82501	1.80782
TEG	0	0	0	0	0

Mass Fraction	34 %	35 %	36 %	37 %	38 %
H2S	8.19219E-05	8.18632E-05	0	8.18632E-05	8.14131E-05
CO2	0.00491149	0.00491194	0	0.00491194	0.00488493
N2	0	0	0	0	0
Methane	0	0	0	0	0
Ethane	0	0	0	0	0
Propane	0	0	0	0	0
i-Butane	0	0	0	0	0
n-Butane	0	0	0	0	0
i-Pentane	0	0	0	0	0
n-Pentane	0	0	0	0	0
n-Hexane	0	0	0	0	0
n-Heptane	0	0	0	0	0
n-Octane	0	0	0	0	0
n-Nonane	0	0	0	0	0
n-Decane	0	0	0	0	0
Undecane	0	0	0	0	0
Benzene	0	0	0	0	0
Toluene	0	0	0	0	0
Ethylbenzene	0	0	0	0	0
m-Xylene	0	0	0	0	0
Water	49.7191	49.719	99.9219	49.719	49.995
MDEA	45.2487	45.2487	0.00489179	45.2487	45
Piperazine	5.02723	5.02724	0.0731929	5.02724	5
TEG	0	0	0	0	0

Copyright © 2002-2022 BRE Group, Ltd.
Licensed to Trinity Consultants, Inc. and Affiliates

Process Streams Report
All Streams
Tabulated by Total Phase

Client Name:	Targa Resources	Job: Wildcat II
Location:	DOU	
Flowsheet:	2 - Amine	

Mass Flow	34 lb/h	35 lb/h	36 lb/h	37 lb/h	38 lb/h
H2S	0.325766	0.325532	0	0	0.325532
CO2	19.5307	19.5325	0	0	19.5325
N2	0	0	0	0	0
Methane	0	0	0	0	0
Ethane	0	0	0	0	0
Propane	0	0	0	0	0
i-Butane	0	0	0	0	0
n-Butane	0	0	0	0	0
i-Pentane	0	0	0	0	0
n-Pentane	0	0	0	0	0
n-Hexane	0	0	0	0	0
n-Heptane	0	0	0	0	0
n-Octane	0	0	0	0	0
n-Nonane	0	0	0	0	0
n-Decane	0	0	0	0	0
Undecane	0	0	0	0	0
Benzene	0	0	0	0	0
Toluene	0	0	0	0	0
Ethylbenzene	0	0	0	0	0
m-Xylene	0	0	0	0	0
Water	197710	197710	2196.65	0	199906
MDEA	179933	179933	0.107539	0	179934
Piperazine	19991	19991	1.60904	0	19992.6
TEG	0	0	0	0	0

Stream Properties

Property	Units	34	35	36	37	38
Temperature	°F	190.191	190.186	120 *		189.759
Pressure	psia	64.6959 *	64.6959	134.696 *	64.6959	64.6959
Mole Fraction Vapor	%	0	0	0		0
Mole Fraction Light Liquid	%	100	100	100		100
Mole Fraction Heavy Liquid	%	0	0	0		0
Molecular Weight	lb/lbmol	31.2692	31.2693	18.0265	31.2693	31.1435
Mass Density	lb/ft^3	62.3487	62.3488	61.6846		62.3559
Molar Flow	lbmol/h	12717.1	12717.1	121.952	0	12839
Mass Flow	lb/h	397654	397654	2198.36	0	399852
Vapor Volumetric Flow	ft^3/h	6377.91	6377.89	35.6387	0	6412.42
Liquid Volumetric Flow	gpm	795.168	795.166	4.44327	0	799.471
Std Vapor Volumetric Flow	MMSCFD	115.823	115.822	1.11069	0	116.933
Std Liquid Volumetric Flow	sgpm	795.605	795.604	4.39592	0	800 *
Specific Gravity		0.999678	0.999681	0.989031		0.999794
API Gravity		3.96346	3.96345	9.97552		3.98514
Net Ideal Gas Heating Value	Btu/ft^3	483.044	483.045	0.513852	483.045	478.462
Net Liquid Heating Value	Btu/lb	5167.94	5167.95	-1048.31	5167.95	5133.77
Gross Ideal Gas Heating Value	Btu/ft^3	569.836	569.838	50.8567	569.838	564.908
Gross Liquid Heating Value	Btu/lb	6221.26	6221.26	11.4788	6221.26	6187.12

Remarks

ProMax 6.0.22251.0
Copyright © 2002-2022 BRE Group, Ltd.
Licensed to Trinity Consultants, Inc. and Affiliates

Process Streams Report
All Streams
Tabulated by Total Phase

Client Name:	Targa Resources	Job: Wildcat II
Location:	DOU	
Flowsheet:	2 - Amine	

Connections

	39	40	42	43	47
From Block	AC-2301 A/B	P-2604/5/6	E-1102	E-1101	SPLT-101
To Block	P-2604/5/6	SPLT-101	T-1202	T-1201	T-1201

Stream Composition

Mole Fraction	39 %	40 %	42 %	43 %	47 %
H2S	7.43962E-05	7.43962E-05	0.000487998	0.000487998	7.43962E-05
CO2	0.00345684	0.00345684	2.39998	2.39998	0.00345684
N2	0	0	1.19343	1.19343	0
Methane	0	0	76.4113	76.4113	0
Ethane	0	0	11.1772	11.1772	0
Propane	0	0	5.30026	5.30026	0
i-Butane	0	0	0.721309	0.721309	0
n-Butane	0	0	1.60472	1.60472	0
i-Pentane	0	0	0.361554	0.361554	0
n-Pentane	0	0	0.380031	0.380031	0
n-Hexane	0	0	0.249162	0.249162	0
n-Heptane	0	0	0.136789	0.136789	0
n-Octane	0	0	0.020788	0.020788	0
n-Nonane	0	0	0	0	0
n-Decane	0	0	0	0	0
Undecane	0	0	0	0	0
Benzene	0	0	0.0228358	0.0228358	0
Toluene	0	0	0.0119629	0.0119629	0
Ethylbenzene	0	0	0.00490284	0.00490284	0
m-Xylene	0	0	0.00333393	0.00333393	0
Water	86.4277	86.4277	0	0	86.4277
MDEA	11.7609	11.7609	0	0	11.7609
Piperazine	1.80782	1.80782	0	0	1.80782
TEG	0	0	0	0	0

Mass Fraction	39 %	40 %	42 %	43 %	47 %
H2S	8.14131E-05	8.14131E-05	0.000768296	0.000768296	8.14131E-05
CO2	0.00488493	0.00488493	4.87925	4.87925	0.00488493
N2	0	0	1.54441	1.54441	0
Methane	0	0	56.6276	56.6276	0
Ethane	0	0	15.5257	15.5257	0
Propane	0	0	10.7967	10.7967	0
i-Butane	0	0	1.93671	1.93671	0
n-Butane	0	0	4.30865	4.30865	0
i-Pentane	0	0	1.20504	1.20504	0
n-Pentane	0	0	1.26662	1.26662	0
n-Hexane	0	0	0.991894	0.991894	0
n-Heptane	0	0	0.63318	0.63318	0
n-Octane	0	0	0.109695	0.109695	0
n-Nonane	0	0	0	0	0
n-Decane	0	0	0	0	0
Undecane	0	0	0	0	0
Benzene	0	0	0.0824011	0.0824011	0
Toluene	0	0	0.0509188	0.0509188	0
Ethylbenzene	0	0	0.0240452	0.0240452	0
m-Xylene	0	0	0.0163508	0.0163508	0
Water	49.995	49.995	0	0	49.995
MDEA	45	45	0	0	45
Piperazine	5	5	0	0	5
TEG	0	0	0	0	0

Copyright © 2002-2022 BRE Group, Ltd.
Licensed to Trinity Consultants, Inc. and Affiliates

Process Streams Report
All Streams
Tabulated by Total Phase

Client Name:	Targa Resources	Job: Wildcat II
Location:	DOU	
Flowsheet:	2 - Amine	

Mass Flow	39 lb/h	40 lb/h	42 lb/h	43 lb/h	47 lb/h
H2S	0.325532	0.325532	2.24521	2.24521	0.162766
CO2	19.5325	19.5325	14258.8	14258.8	9.76626
N2	0	0	4513.26	4513.26	0
Methane	0	0	165484	165484	0
Ethane	0	0	45371.3	45371.3	0
Propane	0	0	31551.6	31551.6	0
i-Butane	0	0	5659.69	5659.69	0
n-Butane	0	0	12591.3	12591.3	0
i-Pentane	0	0	3521.52	3521.52	0
n-Pentane	0	0	3701.49	3701.49	0
n-Hexane	0	0	2898.64	2898.64	0
n-Heptane	0	0	1850.36	1850.36	0
n-Octane	0	0	320.565	320.565	0
n-Nonane	0	0	0	0	0
n-Decane	0	0	0	0	0
Undecane	0	0	0	0	0
Benzene	0	0	240.803	240.803	0
Toluene	0	0	148.801	148.801	0
Ethylbenzene	0	0	70.268	70.268	0
m-Xylene	0	0	47.7823	47.7823	0
Water	199906	199906	0	0	99953.1
MDEA	179934	179934	0	0	89966.8
Piperazine	19992.6	19992.6	0	0	9996.31
TEG	0	0	0	0	0

Stream Properties

Property	Units	39	40	42	43	47
Temperature	°F	130 *	131.891	110 *	110 *	131.891
Pressure	psia	59.6959	1054.7 *	958.696	958.696	1054.7
Mole Fraction Vapor	%	0	0	100	100	0
Mole Fraction Light Liquid	%	100	100	0	0	100
Mole Fraction Heavy Liquid	%	0	0	0	0	0
Molecular Weight	lb/lbmol	31.1435	31.1435	21.6471	21.6471	31.1435
Mass Density	lb/ft^3	63.8569	63.9134	4.13153	4.13153	63.9134
Molar Flow	lbmol/h	12839	12839	13499.8	13499.8	6419.52
Mass Flow	lb/h	399852	399852	292233	292233	199926
Vapor Volumetric Flow	ft^3/h	6261.7	6256.15	70732.4	70732.4	3128.08
Liquid Volumetric Flow	gpm	780.679	779.988	8818.59	8818.59	389.994
Std Vapor Volumetric Flow	MMSCFD	116.933	116.933	122.951	122.951	58.4665
Std Liquid Volumetric Flow	sgpm	800	800	1630.58	1630.58	400
Specific Gravity		1.02386	1.02477	0.747419	0.747419	1.02477
API Gravity		3.98602	3.81247			3.81247
Net Ideal Gas Heating Value	Btu/ft^3	478.462	478.462	1116.86	1116.86	478.462
Net Liquid Heating Value	Btu/lb	5133.77	5133.77	19517.4	19517.4	5133.77
Gross Ideal Gas Heating Value	Btu/ft^3	564.908	564.908	1230.92	1230.92	564.908
Gross Liquid Heating Value	Btu/lb	6187.12	6187.12	21517.3	21517.3	6187.12

Remarks

ProMax 6.0.22251.0
Copyright © 2002-2022 BRE Group, Ltd.
Licensed to Trinity Consultants, Inc. and Affiliates

Process Streams Report
All Streams
Tabulated by Total Phase

Client Name:	Targa Resources	Job: Wildcat II
Location:	DOU	
Flowsheet:	2 - Amine	

Connections

	48	49	50	51	52
From Block	SPLT-101	V-2401	V-2401	T-1201	E-1102
To Block	T-1202	Filtration	--	E-1101	MIX-103

Stream Composition

Mole Fraction	48 %	49 %	50 %	51 %	52 %
H2S	7.43962E-05	0.00104998	0.00203911	1.84674E-07	1.84674E-07
CO2	0.00345684	4.81693	10.8289	5.32881E-05	5.32881E-05
N2	0	1.70179E-05	0.380237	1.21842	1.21842
Methane	0	0.0106186	67.7374	77.9706	77.9706
Ethane	0	0.00315261	11.932	11.4028	11.4028
Propane	0	0.000854928	3.87059	5.40905	5.40905
i-Butane	0	6.08205E-05	0.349178	0.736292	0.736292
n-Butane	0	0.000274687	1.0694	1.63774	1.63774
i-Pentane	0	1.45361E-05	0.107678	0.369128	0.369128
n-Pentane	0	2.46918E-05	0.143084	0.387962	0.387962
n-Hexane	0	9.0369E-06	0.063278	0.254392	0.254392
n-Heptane	0	1.26805E-06	0.0161202	0.139677	0.139677
n-Octane	0	2.08319E-07	0.00225954	0.0212271	0.0212271
n-Nonane	0	0	0	0	0
n-Decane	0	0	0	0	0
Undecane	0	0	0	0	0
Benzene	0	0.0018445	0.0829413	0.022316	0.022316
Toluene	0	0.000857154	0.0358789	0.0117522	0.0117522
Ethylbenzene	0	0.000239065	0.0111493	0.00487632	0.00487632
m-Xylene	0	0.000234724	0.0077891	0.00327914	0.00327914
Water	86.4277	82.1745	3.35976	0.409503	0.409503
MDEA	11.7609	11.2588	0.000345473	0.000336875	0.000336875
Piperazine	1.80782	1.7305	2.12692E-05	0.000564207	0.000564207
TEG	0	0	0	0	0

Mass Fraction	48 %	49 %	50 %	51 %	52 %
H2S	8.14131E-05	0.00112398	0.00304313	2.98503E-07	2.98503E-07
CO2	0.00488493	6.65861	20.8688	0.000111227	0.000111227
N2	0	1.49741E-05	0.466432	1.61881	1.61881
Methane	0	0.00535061	47.5847	59.3246	59.3246
Ethane	0	0.00297754	15.7109	16.2616	16.2616
Propane	0	0.00118411	7.47379	11.3123	11.3123
i-Butane	0	0.000111035	0.888703	2.02967	2.02967
n-Butane	0	0.000501473	2.72175	4.51459	4.51459
i-Pentane	0	3.29416E-05	0.340193	1.2631	1.2631
n-Pentane	0	5.59562E-05	0.452051	1.32755	1.32755
n-Hexane	0	2.44607E-05	0.238783	1.03973	1.03973
n-Heptane	0	3.99097E-06	0.0707316	0.663797	0.663797
n-Octane	0	7.47431E-07	0.0113022	0.115	0.115
n-Nonane	0	0	0	0	0
n-Decane	0	0	0	0	0
Undecane	0	0	0	0	0
Benzene	0	0.00452547	0.283698	0.0826733	0.0826733
Toluene	0	0.00248066	0.14476	0.051356	0.051356
Ethylbenzene	0	0.000797196	0.0518317	0.0245531	0.0245531
m-Xylene	0	0.00078272	0.0362107	0.016511	0.016511
Water	49.995	46.4992	2.65044	0.349889	0.349889
MDEA	45	42.1403	0.00180269	0.00190388	0.00190388
Piperazine	5	4.68189	8.02236E-05	0.00230491	0.00230491
TEG	0	0	0	0	0

ProMax 6.0.22251.0
Copyright © 2002-2022 BRE Group, Ltd.
Licensed to Trinity Consultants, Inc. and Affiliates

Process Streams Report
All Streams
Tabulated by Total Phase

Client Name:	Targa Resources	Job: Wildcat II
Location:	DOU	
Flowsheet:	2 - Amine	

Mass Flow	48 lb/h	49 lb/h	50 lb/h	51 lb/h	52 lb/h
H2S	0.162766	4.79925	0.0153612	0.000832006	0.000832006
CO2	9.76626	28431.4	105.342	0.310018	0.310018
N2	0	0.0639371	2.35447	4512.05	4512.05
Methane	0	22.8464	240.2	165353	165353
Ethane	0	12.7137	79.3061	45325.3	45325.3
Propane	0	5.05599	37.7264	31530.2	31530.2
i-Butane	0	0.474103	4.48602	5657.21	5657.21
n-Butane	0	2.14122	13.739	12583.3	12583.3
i-Pentane	0	0.140656	1.71724	3520.59	3520.59
n-Pentane	0	0.238925	2.28188	3700.23	3700.23
n-Hexane	0	0.104444	1.20534	2897.99	2897.99
n-Heptane	0	0.0170409	0.357041	1850.17	1850.17
n-Octane	0	0.00319143	0.0570517	320.535	320.535
n-Nonane	0	0	0	0	0
n-Decane	0	0	0	0	0
Undecane	0	0	0	0	0
Benzene	0	19.3231	1.43206	230.432	230.432
Toluene	0	10.5921	0.730723	143.142	143.142
Ethylbenzene	0	3.40392	0.261638	68.4359	68.4359
m-Xylene	0	3.34211	0.182786	46.0205	46.0205
Water	99953.1	198545	13.379	975.233	975.233
MDEA	89966.8	179933	0.00909968	5.30662	5.30662
Piperazine	9996.31	19991	0.000404955	6.42439	6.42439
TEG	0	0	0	0	0

Stream Properties

Property	Units	48	49	50	51	52
Temperature	°F	131.891	142.472	142.472	149.612	130.524
Pressure	psia	1054.7	79.6959	79.6959	956.696	954.696
Mole Fraction Vapor	%	0	0	100	100	99.8727
Mole Fraction Light Liquid	%	100	100	0	0	0.127318
Mole Fraction Heavy Liquid	%	0	0	0	0	0
Molecular Weight	lb/lbmol	31.1435	31.837	22.8366	21.0847	21.0847
Mass Density	lb/ft^3	63.9134	69.2528	0.285436	3.56446	3.75651
Molar Flow	lbmol/h	6419.52	13411.6	22.1041	13219.4	13219.4
Mass Flow	lb/h	199926	426986	504.783	278726	278726
Vapor Volumetric Flow	ft^3/h	3128.08	6165.61	1768.46	78195.8	74198.1
Liquid Volumetric Flow	gpm	389.994	768.7	220.484	9749.08	9250.67
Std Vapor Volumetric Flow	MMSCFD	58.4665	122.148	0.201316	120.397	120.397
Std Liquid Volumetric Flow	sgpm	400	867.128	2.57178	1596.36	1596.36
Specific Gravity		1.02477	1.11038	0.78849	0.728	
API Gravity		3.81247	-5.52716			
Net Ideal Gas Heating Value	Btu/ft^3	478.462	458.342	959.962	1139.63	1139.63
Net Liquid Heating Value	Btu/lb	5133.77	4809.56	15863.8	20446.6	20446.6
Gross Ideal Gas Heating Value	Btu/ft^3	564.908	540.838	1060.43	1256.22	1256.22
Gross Liquid Heating Value	Btu/lb	6187.12	5792.89	17533.7	22545.5	22545.5

Remarks

ProMax 6.0.22251.0
Copyright © 2002-2022 BRE Group, Ltd.
Licensed to Trinity Consultants, Inc. and Affiliates

Process Streams Report
All Streams
Tabulated by Total Phase

Client Name:	Targa Resources	Job: Wildcat II
Location:	DOU	
Flowsheet:	2 - Amine	

Connections

	53	65			
From Block	E-1101	FAXR-100			
To Block	MIX-103	V-2402			

Stream Composition

Mole Fraction	53 %	65 %			
H2S	1.84674E-07	0.00337728			
CO2	5.32881E-05	16.4671			
N2	1.21842	3.88164E-05			
Methane	77.9706	0.0316568			
Ethane	11.4028	0.00989318			
Propane	5.40905	0.00264362			
i-Butane	0.736292	0.000183677			
n-Butane	1.63774	0.000860327			
i-Pentane	0.369128	4.25408E-05			
n-Pentane	0.387962	7.45082E-05			
n-Hexane	0.254392	2.66546E-05			
n-Heptane	0.139677	3.37867E-06			
n-Octane	0.0212271	5.7341E-07			
n-Nonane	0	0			
n-Decane	0	0			
Undecane	0	0			
Benzene	0.022316	0.00633037			
Toluene	0.0117522	0.00293375			
Ethylbenzene	0.00487632	0.000816866			
m-Xylene	0.00327914	0.000805033			
Water	0.409503	83.4036			
MDEA	0.000336875	0.0348617			
Piperazine	0.000564207	0.0347234			
TEG	0	0			

Mass Fraction	53 %	65 %			
H2S	2.98503E-07	0.0051466			
CO2	0.000111227	32.4046			
N2	1.61881	4.86209E-05			
Methane	59.3246	0.0227081			
Ethane	16.2616	0.0133014			
Propane	11.3123	0.00521239			
i-Butane	2.02967	0.000477353			
n-Butane	4.51459	0.00223588			
i-Pentane	1.2631	0.000137239			
n-Pentane	1.32755	0.000240367			
n-Hexane	1.03973	0.000102706			
n-Heptane	0.663797	1.51378E-05			
n-Octane	0.115	2.92875E-06			
n-Nonane	0	0			
n-Decane	0	0			
Undecane	0	0			
Benzene	0.0826733	0.02211			
Toluene	0.051356	0.0120867			
Ethylbenzene	0.0245531	0.0038777			
m-Xylene	0.016511	0.00382153			
Water	0.349889	67.1844			
MDEA	0.00190388	0.18575			
Piperazine	0.00230491	0.133736			
TEG	0	0			

ProMax 6.0.22251.0
Copyright © 2002-2022 BRE Group, Ltd.
Licensed to Trinity Consultants, Inc. and Affiliates

Process Streams Report
All Streams
Tabulated by Total Phase

Client Name:	Targa Resources	Job: Wildcat II
Location:	DOU	
Flowsheet:	2 - Amine	

Mass Flow	53 lb/h	65 lb/h			
H2S	0.000832006	4.54471			
CO2	0.310018	28614.9			
N2	4512.05	0.0429347			
Methane	165353	20.0524			
Ethane	45325.3	11.7458			
Propane	31530.2	4.6028			
i-Butane	5657.21	0.421527			
n-Butane	12583.3	1.97439			
i-Pentane	3520.59	0.121189			
n-Pentane	3700.23	0.212256			
n-Hexane	2897.99	0.0906949			
n-Heptane	1850.17	0.0133675			
n-Octane	320.535	0.00258623			
n-Nonane	0	0			
n-Decane	0	0			
Undecane	0	0			
Benzene	230.432	19.5242			
Toluene	143.142	10.6731			
Ethylbenzene	68.4359	3.42421			
m-Xylene	46.0205	3.37461			
Water	975.233	59327.2			
MDEA	5.30662	164.027			
Piperazine	6.42439	118.095			
TEG	0	0			

Stream Properties

Property	Units	53	65			
Temperature	°F	130.524	120	*		
Pressure	psia	954.696	25.6959			
Mole Fraction Vapor	%	99.8727	17.5824			
Mole Fraction Light Liquid	%	0.127318	82.4176			
Mole Fraction Heavy Liquid	%	0	0			
Molecular Weight	lb/lbmol	21.0847	22.3644			
Mass Density	lb/ft^3	3.75651	0.526666			
Molar Flow	lbmol/h	13219.4	3948.46			
Mass Flow	lb/h	278726	88305.1			
Vapor Volumetric Flow	ft^3/h	74198.1	167668			
Liquid Volumetric Flow	gpm	9250.67	20904.1			
Std Vapor Volumetric Flow	MMSCFD	120.397	35.9611			
Std Liquid Volumetric Flow	sgpm	1596.36	189.566			
Specific Gravity						
API Gravity						
Net Ideal Gas Heating Value	Btu/ft^3	1139.63	3.35153			
Net Liquid Heating Value	Btu/lb	20446.6	-680.469			
Gross Ideal Gas Heating Value	Btu/ft^3	1256.22	45.5894			
Gross Liquid Heating Value	Btu/lb	22545.5	36.232			

Remarks

ProMax 6.0.22251.0
Copyright © 2002-2022 BRE Group, Ltd.
Licensed to Trinity Consultants, Inc. and Affiliates

Artesia Laboratory
200 E Main St.
Artesia, NM 88210
Phone 575-746-3481

Certificate of Analysis

Number: 6030-22020089-001A

Feb. 07, 2022

Tom Cleveland
Lucid Energy Group
3100 McKinnon St. #800
Dallas, TX 75201

Station Name: Road Runner Gas Plant Tank Condensate
Station Number: N/A
Station Location: Lucid
Analyzed: 02/07/2022 10:58:32

Sampled By: Michael Mirabal
Sample Of: Liquid Spot
Sample Date: 02/03/2022 01:43
Sample Conditions:
Method: GPA 2186

Analytical Data

Components	Mol. %	Wt. %	L.V. %
Nitrogen	0.074	0.023	0.020
Methane	0.002	NIL	0.001
Carbon Dioxide	NIL	NIL	NIL
Ethane	0.003	0.001	0.002
Propane	0.024	0.012	0.016
Iso-Butane	0.086	0.056	0.069
n-Butane	1.731	1.124	1.333
Iso-Pentane	10.631	8.570	9.496
n-Pentane	17.244	13.901	15.267
i-Hexanes	15.924	15.104	15.680
n-Hexane	12.169	11.715	12.221
Benzene	1.126	0.983	0.771
Cyclohexane	5.756	5.413	4.786
i-Heptanes	13.147	13.810	13.237
n-Heptane	4.094	4.583	4.614
Toluene	1.328	1.368	1.088
i-Octanes	9.110	10.700	9.898
n-Octane	0.853	1.089	1.066
Ethylbenzene	0.150	0.179	0.141
Xylenes	0.623	0.741	0.590
i-Nonanes	1.549	2.099	1.926
n-Nonane	0.342	0.490	0.472
i-Decanes	0.248	0.354	0.301
Decanes Plus	3.786	7.685	7.005
	100.000	100.000	100.000

Calculated Physical Properties	Total	C10+
API Gravity at 60°F	72.7803	54.3309
Pounds per Gallon (in Air)	5.769	6.341
Pounds per Gallon (in Vacuum)	5.775	6.348
Cu. Ft. Vapor per Gallon @ 14.696 psia	24.487	13.502
Specific Gravity at 60°F	0.6927	0.7614
Molecular Weight	89.496	178.418
BTU / GAL. (as a vapor)	119204	130237
BTU / LB. (as a vapor)	20640	20514



Data reviewed by: Krystle Fitzwater, Laboratory Manager

Quality Assurance: The above analyses are performed in accordance with ASTM, UOP, GPA guidelines for quality assurance, unless otherwise stated.

Certificate of Analysis

Number: 6030-22020089-001A

Artesia Laboratory
200 E Main St.
Artesia, NM 88210
Phone 575-746-3481

Tom Cleveland
Lucid Energy Group
3100 McKinnon St. #800
Dallas, TX 75201

Feb. 07, 2022

Station Name: Road Runner Gas Plant Tank Condensate
Station Number: N/A
Station Location: Lucid

Sampled By: Michael Mirabal
Sample Of: Liquid Spot
Sample Date: 02/03/2022 01:43
Sample Conditions:

Analytical Data

Test	Method	Result	Units	Detection Limit	Lab Tech.	Analysis Date
VP of Crude Oil: V/L = 4:1 @ 37.8 °F	ASTM D-6377	9.09	psi		KNF	02/07/2022
RVPE (D323 Equivalent) @ 3.2 °C	ASTM D-6377	8.32	psi		KNF	02/07/2022

Data reviewed by: Krystle Fitzwater, Laboratory Manager

Quality Assurance: The above analyses are performed in accordance with ASTM, UOP, GPA guidelines for quality assurance, unless otherwise stated.

Certificate of Analysis

Number: 5030-19110424-001A

Midland Laboratory
2200 East I-20
Midland, TX 79706
Phone 432-689-7252

Lucid Energy Group
416 E. Main St.
Artesia, NM 88210

Nov. 21, 2019

Station Name: ROAD RUNNER INLET
Method: GPA 2286
Cylinder No: A102
Analyzed: 11/20/2019 19:30:36 by WH

Sampled By: DEREK SAUDER
Sample Of: Gas Spot
Sample Date: 11/19/2019
Sample Conditions: 797.5 psig, @ 75 °F

Analytical Data

Components	Mol. %	Wt. %	GPM at 14.696 psia		
Hydrogen Sulfide	0.000	0.000		GPM TOTAL C2+	5.985
Nitrogen	1.397	1.840		GPM TOTAL C3+	2.710
Carbon Dioxide	0.330	0.683		GPM TOTAL iC5+	0.409
Methane	76.983	58.062			
Ethane	12.234	17.295	3.275		
Propane	5.668	11.750	1.563		
Iso-butane	0.717	1.959	0.235		
n-Butane	1.595	4.358	0.503		
Iso-pentane	0.287	0.973	0.105		
n-Pentane	0.288	0.977	0.105		
Hexanes Plus	0.501	2.103	0.199		
	100.000	100.000	5.985		

Calculated Physical Properties	**Total**	**C6+**
Relative Density Real Gas	0.7367	3.0526
Calculated Molecular Weight	21.27	88.41
Compressibility Factor	0.9964	
GPA 2172 Calculation:		
Calculated Gross BTU per ft³ @ 14.696 psia & 60°F		
Real Gas Dry BTU	1264	4785
Water Sat. Gas Base BTU	1242	4701

Hydrocarbon Laboratory Manager

Quality Assurance: The above analyses are performed in accordance with ASTM, UOP, GPA guidelines for quality assurance, unless otherwise stated.

Midland Laboratory
2200 East I-20
Midland, TX 79706
Phone 432-689-7252

Certificate of Analysis

Number: 5030-19110424-001A

Lucid Energy Group
416 E. Main St.
Artesia, NM 88210

Nov. 21, 2019

Station Name: ROAD RUNNER INLET
Method: GPA 2286
Cylinder No: A102
Analyzed: 11/20/2019 19:30:36 by WH

Sampled By: DEREK SAUDER
Sample Of: Gas Spot
Sample Date: 11/19/2019
Sample Conditions: 797.5 psig, @ 75 °F

Analytical Data

Components	Mol. %	Wt. %	GPM at 14.696 psia		
Hydrogen Sulfide	0.000	0.000		GPM TOTAL C2+	5.9850
Nitrogen	1.397	1.840		GPM TOTAL C3+	2.7100
Methane	76.983	58.062		GPM TOTAL iC5+	0.4090
Carbon Dioxide	0.330	0.683			
Ethane	12.234	17.295	3.275		
Propane	5.668	11.750	1.563		
Iso-Butane	0.717	1.959	0.235		
n-Butane	1.595	4.358	0.503		
Iso-Pentane	0.287	0.973	0.105		
n-Pentane	0.288	0.977	0.105		
Hexanes	0.284	1.122	0.113		
Heptanes Plus	0.217	0.981	0.086		
	100.000	100.000	5.985		

Calculated Physical Properties	Total	C7+
Relative Density Real Gas	0.7367	3.1977
Calculated Molecular Weight	21.27	92.61
Compressibility Factor	0.9964	
GPA 2172 Calculation:		
Calculated Gross BTU per ft³ @ 14.696 psia & 60°F		
Real Gas Dry BTU	1263.6	4913.3
Water Sat. Gas Base BTU	1241.5	4827.6

Hydrocarbon Laboratory Manager

Quality Assurance: The above analyses are performed in accordance with ASTM, UOP, GPA guidelines for quality assurance, unless otherwise stated.

Midland Laboratory
2200 East I-20
Midland, TX 79706
Phone 432-689-7252

Certificate of Analysis

Number: 5030-19110424-001A

Lucid Energy Group
416 E. Main St.
Artesia, NM 88210

Nov. 21, 2019

Station Name: ROAD RUNNER INLET
Method: GPA 2286
Cylinder No: A102
Analyzed: 11/20/2019 19:30:36 by WH

Sampled By: DEREK SAUDER
Sample Of: Gas Spot
Sample Date: 11/19/2019
Sample Conditions: 797.5 psig, @ 75 °F

Analytical Data

Components	Mol. %	Wt. %	GPM at 14.696 psia
Nitrogen	1.397	1.840	
Methane	76.983	58.062	
Carbon Dioxide	0.330	0.683	
Hydrogen Sulfide	NIL	NIL	
Ethane	12.234	17.295	3.275
Propane	5.668	11.750	1.563
Iso-Butane	0.717	1.959	0.235
n-Butane	1.595	4.358	0.503
Iso-Pentane	0.287	0.973	0.105
n-Pentane	0.288	0.977	0.105
i-Hexanes	0.179	0.700	0.070
n-Hexane	0.105	0.422	0.043
Benzene	0.017	0.062	0.005
Cyclohexane	0.048	0.190	0.016
i-Heptanes	0.091	0.387	0.036
n-Heptane	0.017	0.079	0.008
Toluene	0.007	0.029	0.002
i-Octanes	0.034	0.174	0.016
n-Octane	0.002	0.012	0.001
Ethylbenzene	NIL	0.001	NIL
Xylenes	NIL	0.007	0.001
i-Nonanes	0.001	0.016	0.001
n-Nonane	NIL	0.004	NIL
i-Decanes	NIL	0.008	NIL
n-Decane	NIL	0.002	NIL
Undecanes	NIL	0.002	NIL
Dodecanes	NIL	0.002	NIL
Tridecanes	NIL	0.005	NIL
Tetradecanes Plus	NIL	0.001	NIL
	100.000	100.000	5.985

GPM TOTAL C2+ 5.985

Calculated Physical Properties	Total	C14+
Relative Density Real Gas	0.7367	NIL
Calculated Molecular Weight	21.271	NIL
Compressibility Factor	0.9964	
GPA 2172 Calculation:		
Calculated Gross BTU per ft³ @ 14.696 psia & 60°F		
Real Gas Dry BTU	1263.6	NIL
Water Sat. Gas Base BTU	1241.5	NIL

Hydrocarbon Laboratory Manager

Quality Assurance: The above analyses are performed in accordance with ASTM, UOP, GPA guidelines for quality assurance, unless otherwise stated.

PANTECHS LABORATORIES, INC.

Leaders in Petroleum Analytical Services
www.pantechs.com

Analytical Report

Customer:	Lucid Energy Delaware	**Order:**	O29-2140
Location:	Road Runner Plant	**Received:**	7/27/2021
Description:	Fuel Gas	**Primary Contact:**	Jaylen Fuentes

REPORT DISTRIBUTION:

Jaylen Fuentes

All data reported in this Analytical Report is in compliance with the test method(s) performed as of the date noted above. The validity and integrity of this report will remain intact as long as it is accompanied by this page and reproduced in full. Any datafile (e.g. txt, csv, etc.) produced which is associated with the results in this report shall be considered for convenience only and does not supersede this report as the official test results. We reserve the right to return to you any unused samples received if we consider so necessary (e.g. samples identified as hazardous waste).

We appreciate you choosing Pantechs Laboratories. If you have any questions concerning this report, please feel free to contact us at any time.

Pantechs Laboratories, Inc.
Order: O29-2140 Order Date: 7/27/2021
Order Description: Road Runner Plant, Fuel Gas

Sample List						
Fluid	**Operator**	**Location**	**Site**	**Sample Point**	**Date**	**Time**
Gas	Lucid Energy Delaware	Road Runner Plant	Fuel Gas	Fuel Meter	7/27/2021	12:23 PM

No Sample List				
Operator	**Location**	**Site**	**Sample Point**	**Comment**

Pantechs Laboratories, Inc. - Order: O29-2140 - Order Date: 7/27/2021
Order Description: Road Runner Plant, Fuel Gas

SAMPLE ID		COLLECTION DATA	
Operator	Lucid Energy Delaware	**Pressure**	15 psig
Location	Road Runner Plant	**Sample Temp**	N/A
Site	Fuel Gas	**Atm Temp**	80 F
Site Type	Meter	**Collection Date**	07/27/2021
Sample Point	Fuel Meter	**Collection Time**	12:23 PM
Spot/Comp	Spot	**Collection By**	Cody Carson
Meter ID		**Pressure Base**	14.730 psi
Purchaser		**Temperature Base**	60 F
Fluid	Gas	**Container(s)**	PLS029 , PL2136

Onsite Testing by Stain Tube

METHOD	TYPE	MOL%	GRAINS/100	PPMV
GPA2377	H2S	0.0000	0.00	0.0

GPA 2286 Gas Extended Fractional Analysis

COMPOUND	FORMULA	MOL%	WT%	GPM
HELIUM	He	0.0064	0.0014	0.0006
NITROGEN	N2	1.1398	1.8037	0.1251
CARBON DIOXIDE	CO2	0.5582	1.3878	0.0950
***OXYGEN+ARGON**	O2+Ar	0.0037	0.0067	0.0003
HYDROGEN SULFIDE	H2S	0.0000	0.0000	0.0000
METHANE	C1	88.8585	80.5282	15.0243
ETHANE	C2	9.1322	15.5122	2.4358
PROPANE	C3	0.2906	0.7239	0.0798
I-BUTANE	iC4	0.0071	0.0233	0.0023
N-BUTANE	nC4	0.0027	0.0089	0.0008
I-PENTANE	iC5	0.0001	0.0004	0.0000
N-PENTANE	nC5	0.0001	0.0004	0.0000
NEO-PENTANE	neC5	0.0002	0.0008	0.0001
HEXANES PLUS	C6+	0.0004	0.0023	0.0001
TOTALS:		**100.0000**	**100.0000**	**17.7645**

Value of "0.0000" interpreted as below detectable limit. Onsite H2S value is used in fractional if performed.
***Oxygen+Argon:** Compounds elute as single peak; additional testing required to distinguish each.*

LIQUID YIELD	C2+	C3+	C4+	C5+	26# Liquid	10# Liquid
GAL/MSCF	2.5191	0.0833	0.0035	0.0002	0.0004	
CALC PROP	**BTU/CF**	**Specific Gr.**	**Z Factor**	**Mol Weight**	**LB/SCF**	**Wobbe IDX**
DRY	1,071.8	0.6124	0.9976	18.70	0.0495	1,369.5
WATER SAT.	1,054.4	0.6128	0.9973	18.38	0.0486	
C6+ ONLY	5,052.8	3.4484		99.88		

Hexanes Plus Detail - Road Runner Plant:Fuel Gas:Fuel Meter:7/27/2021

C6 GROUP	FORMULA	MOL%	WT%
2,2-dimethylbutane	C6H14	*0.000000*	*0.000000*
2,3-dimethylbutane+cyclopentane	C6H14	*0.000000*	*0.000000*
2-methylpentane	C6H14	*0.000000*	*0.000000*
3-methylpentane	C6H14	*0.000000*	*0.000000*
benzene	C6H6	0.000183	0.000808
cyclohexane	C6H12	*0.000000*	*0.000000*
methylcyclopentane	C6H12	*0.000000*	*0.000000*
n-hexane	C6H14	0.000054	0.000263
TOTALS:		**0.000237**	**0.001071**

C7 GROUP	FORMULA	MOL%	WT%
1,1-dimethylcyclopentane+3-methylhexane	C7H16	*0.000000*	*0.000000*
2,2-dimethylpentane	C7H16	*0.000000*	*0.000000*
2,3-dimethylpentane	C7H16	*0.000000*	*0.000000*
2,4-dimethylhexane+ethylcyclopentane	C7H14	*0.000000*	*0.000000*
2,4-dimethylpentane	C7H16	*0.000000*	*0.000000*
2-methylhexane	C7H16	*0.000000*	*0.000000*
3,3-dimethylpentane	C7H16	*0.000000*	*0.000000*
cis-1,3-dimethylcyclopentane+3-Ethylpentane	C7H14	*0.000000*	*0.000000*
cycloheptane	C7H14	*0.000000*	*0.000000*
Methylcyclohexane+1,1,3-Trimethylpentane	C7H14	*0.000000*	*0.000000*
n-heptane	C7H16	0.000030	0.000170
toluene	C7H8	0.000093	0.000484
trans-1,2-dimethylcyclopentane+cis-1,2-Dimethylcyclopentane	C7H14	*0.000000*	*0.000000*
trans-1,3-dimethylcyclopentane	C7H14	*0.000000*	*0.000000*
TOTALS:		**0.000123**	**0.000654**

C8 GROUP	FORMULA	MOL%	WT%
1-ethyl-1-methylcyclopentane	C8H16	*0.000000*	*0.000000*
2,2,3-trimethylpentane	C8H18	*0.000000*	*0.000000*
2,2,4-trimethylpentane	C8H18	*0.000000*	*0.000000*
2,3,4-trimethylpentane	C8H18	*0.000000*	*0.000000*
2,5-dimethylhexane	C8H18	*0.000000*	*0.000000*
2-methylheptane+4-methylheptane	C8H18	*0.000000*	*0.000000*
3,3-dimethylhexane	C8H18	*0.000000*	*0.000000*
3-methylheptane	C8H18	*0.000000*	*0.000000*
cis-1,2-dimethylcyclohexane	C8H16	*0.000000*	*0.000000*
cis-1,3-dimethylcyclohexane	C8H16	*0.000000*	*0.000000*

cyclooctane	C8H16	*0.000000*	*0.000000*
ethylbenzene	C8H10	0.000029	0.000174
ethylcyclohexane	C8H16	*0.000000*	*0.000000*
m-xylene+p-xylene	C8H10	*0.000000*	*0.000000*
n-octane	C8H18	0.000032	0.000206
o-xylene	C8H10	*0.000000*	*0.000000*
trans-1,3-dimethylcyclohexane	C8H16	*0.000000*	*0.000000*
TOTALS:		**0.000061**	**0.000380**

C9 GROUP	FORMULA	MOL%	WT%
1,1,2-trimethylcyclohexane	C9H18	*0.000000*	*0.000000*
1,2,3-trimethylbenzene	C9H12	*0.000000*	*0.000000*
1,2,4-trimethylbenzene+tert-butylbenzene	C9H12	*0.000000*	*0.000000*
1,3,5-trimethylbenzene	C9H12	*0.000000*	*0.000000*
2,2,3-trimethylhexane	C9H20	*0.000000*	*0.000000*
2,2,4-trimethylhexane	C9H20	*0.000000*	*0.000000*
2,2-dimethylheptane	C9H20	*0.000000*	*0.000000*
2,3,4-trimethylhexane	C9H20	*0.000000*	*0.000000*
2,4,4-trimethylhexane	C9H20	*0.000000*	*0.000000*
2,5-dimethylheptane	C9H20	*0.000000*	*0.000000*
2-methyloctane	C9H20	*0.000000*	*0.000000*
3,4-dimethylheptane	C9H20	*0.000000*	*0.000000*
cis-1,2,trans-1,4-1,2,4-trimethylcyclohexane	C9H18	*0.000000*	*0.000000*
cis,cis-1,2,3-trimethylcyclohexane	C9H18	*0.000000*	*0.000000*
isopropylbenzene	C9H12	*0.000000*	*0.000000*
methylcyclooctane	C9H18	*0.000000*	*0.000000*
m-ethyltoluene+p-ethyltoluene	C9H12	*0.000000*	*0.000000*
n-nonane	C9H20	0.000021	0.000152
propylbenzene	C9H12	*0.000000*	*0.000000*
propylcyclohexane	C9H18	*0.000000*	*0.000000*
r-1,t-2,c-3-trimethylcyclohexane	C9H18	*0.000000*	*0.000000*
r-1,t-2,t-4-trimethylcyclohexane	C9H18	*0.000000*	*0.000000*
Unidentified C9	C9	*0.000000*	*0.000000*
TOTALS:		**0.000021**	**0.000152**

C10 GROUP	FORMULA	MOL%	WT%
1,2,3,4-tetramethylbenzene	C10H14	*0.000000*	*0.000000*
1,2,3,5-tetramethylbenzene	C10H14	*0.000000*	*0.000000*
1,2,4,5-tetramethylbenzene	C10H14	*0.000000*	*0.000000*
1,2-diethylbenzene	C10H14	*0.000000*	*0.000000*

1,2-dimethyl-3-ethylbenzene	C10H14	*0.000000*	*0.000000*
1,2-dimethyl-4-ethylbenzene	C10H14	*0.000000*	*0.000000*
1,3-diethylbenzene	C10H14	*0.000000*	*0.000000*
1,3-dimethyl-2-ethylbenzene	C10H14	*0.000000*	*0.000000*
1,4-diethylbenzene	C10H14	*0.000000*	*0.000000*
1,4-dimethyl-2-ethylbenzene	C10H14	*0.000000*	*0.000000*
1-methyl-2-isopropylbenzene	C10H14	*0.000000*	*0.000000*
1-methyl-2-propylbenzene	C10H14	*0.000000*	*0.000000*
1-methyl-3-isopropylbenzene	C10H14	*0.000000*	*0.000000*
1-methyl-4-isopropylbenzene	C10H14	*0.000000*	*0.000000*
2-methylnonane	C10H22	*0.000000*	*0.000000*
3-ethyloctane	C10H22	*0.000000*	*0.000000*
3-methylnonane	C10H22	*0.000000*	*0.000000*
4-methylnonane	C10H22	*0.000000*	*0.000000*
butylbenzene	C10H14	*0.000000*	*0.000000*
butylcyclohexane	C10H20	*0.000000*	*0.000000*
isobutylbenzene	C10H14	*0.000000*	*0.000000*
naphthalene	C10H8	*0.000000*	*0.000000*
n-decane	C10H22	*0.000000*	*0.000000*
sec-butylbenzene	C10H14	*0.000000*	*0.000000*
tert-butylcyclohexane	C10H20	*0.000000*	*0.000000*
Unidentified C10	C10	*0.000000*	*0.000000*
TOTALS:		**0.000000**	**0.000000**

C11 GROUP	FORMULA	MOL%	WT%
n-undecane	C11H24	*0.000000*	*0.000000*
pentylbenzene	C11H16	*0.000000*	*0.000000*
Unidentified C11	C11	*0.000000*	*0.000000*
TOTALS:		**0.000000**	**0.000000**

C12 GROUP	FORMULA	MOL%	WT%
n-dodecane	C12H26	*0.000000*	*0.000000*
Unidentified C12	C12	*0.000000*	*0.000000*
TOTALS:		**0.000000**	**0.000000**

C13 GROUP	FORMULA	MOL%	WT%
n-tridecane	C13H28	*0.000000*	*0.000000*
Unidentified C13	C13	*0.000000*	*0.000000*
TOTALS:		**0.000000**	**0.000000**

C14 GROUP	FORMULA	MOL%	WT%

n-tetradecane	C14H30	*0.000000*	*0.000000*
Unidentified C14	C14	*0.000000*	*0.000000*
TOTALS:		**0.000000**	**0.000000**

C15+ GROUP	FORMULA	MOL%	WT%
n-pentadecane	C15H32	*0.000000*	*0.000000*
Unidentified C15	C15	*0.000000*	*0.000000*
TOTALS:		**0.000000**	**0.000000**

Road Runner Plant:Fuel Gas:Fuel Meter:7/27/2021
ASTM D5504 Gas Sulfur Speciation

SUMMARY	PPMV	GRAINS/100 SCF	PPMW
COMPOUND TOTALS:	**0.0**	**0.00**	**0.0**
TOTAL SULFUR, AS MASS OF SULFUR (PPMW):			**0.0**

Speciation Detail

SULFIDE GROUP	PPMV	GRAINS/100 SCF	PPMW
hydrogen sulfide	*0.0*	*0.00*	*0.0*
carbonyl sulfide	*0.0*	*0.00*	*0.0*
Dimethyl Sulfide	*0.0*	*0.00*	*0.0*
Methyl Ethyl Sulfide	*0.0*	*0.00*	*0.0*
Diethyl Sulfide	*0.0*	*0.00*	*0.0*
t-Butyl Methyl Sulfide	*0.0*	*0.00*	*0.0*
Methyl sec-Butyl Sulfide	*0.0*	*0.00*	*0.0*
Ethyl n-Propyl Sulfide	*0.0*	*0.00*	*0.0*
Diisopropyl Sulfide	*0.0*	*0.00*	*0.0*
Propyl Sulfide	*0.0*	*0.00*	*0.0*
tert-Butyl Sulfide	*0.0*	*0.00*	*0.0*
SULFIDE TOTALS:	**0.0**	**0.00**	**0.0**

DISULFIDE GROUP	PPMV	GRAINS/100 SCF	PPMW
Carbon Disulfide	*0.0*	*0.00*	*0.0*
Dimethyl Disulfide	*0.0*	*0.00*	*0.0*
Ethyl Methyl Disulfide	*0.0*	*0.00*	*0.0*
Methyl i-Propyl Disulfide	*0.0*	*0.00*	*0.0*
Diethyl Disulfide	*0.0*	*0.00*	*0.0*
Propyl Methyl Disulfide	*0.0*	*0.00*	*0.0*
Methyl tert-Butyl Disulfide	*0.0*	*0.00*	*0.0*
Ethyl i-Propyl Disulfide	*0.0*	*0.00*	*0.0*
Methyl sec-Butyl Disulfide	*0.0*	*0.00*	*0.0*
Ethyl Propyl Disulfide+1-Heptanethiol	*0.0*	*0.00*	*0.0*
i-Propyl Disulfide	*0.0*	*0.00*	*0.0*
n-Propyl Disulfide	*0.0*	*0.00*	*0.0*
t-Butyl Disulfide	*0.0*	*0.00*	*0.0*
Diphenyl Disulfide	*0.0*	*0.00*	*0.0*
DISULFIDE TOTALS:	**0.0**	**0.00**	**0.0**

MERCAPTAN GROUP	PPMV	GRAINS/100 SCF	PPMW
Methyl Mercaptan	*0.0*	*0.00*	*0.0*
Ethyl Mercaptan	*0.0*	*0.00*	*0.0*

i-Propyl Mercaptan	*0.0*	*0.00*	*0.0*
n-Propyl Mercaptan	*0.0*	*0.00*	*0.0*
tert-Butyl Mercaptan	*0.0*	*0.00*	*0.0*
sec-Butyl Mercaptan	*0.0*	*0.00*	*0.0*
i-Butyl Mercaptan	*0.0*	*0.00*	*0.0*
n-Butyl Mercaptan	*0.0*	*0.00*	*0.0*
1,5-Pentanedithiol	*0.0*	*0.00*	*0.0*
2 and 3-Methyl-1-Butanethiol+Tetrahydrothiophene	*0.0*	*0.00*	*0.0*
1-Pentanethiol	*0.0*	*0.00*	*0.0*
1,2-Ethanethiol	*0.0*	*0.00*	*0.0*
1-Hexanethiol	*0.0*	*0.00*	*0.0*
Thiophenol	*0.0*	*0.00*	*0.0*
1,4-Butanethiol	*0.0*	*0.00*	*0.0*
1-Octanethiol	*0.0*	*0.00*	*0.0*
1-Nonanethiol	*0.0*	*0.00*	*0.0*
1-Decanethiol	*0.0*	*0.00*	*0.0*
MERCAPTAN TOTALS:	**0.0**	**0.00**	**0.0**

THIOPHENE GROUP	PPMV	GRAINS/100 SCF	PPMW
Thiophene	*0.0*	*0.00*	*0.0*
2-Methylthiophene+3-Methylthiophene	*0.0*	*0.00*	*0.0*
2-Ethyl Thiophene	*0.0*	*0.00*	*0.0*
2-Bromothiophene	*0.0*	*0.00*	*0.0*
2-Propylthiophene	*0.0*	*0.00*	*0.0*
2-Butylthiophene	*0.0*	*0.00*	*0.0*
3-Butylthiophene	*0.0*	*0.00*	*0.0*
Benzothiophene	*0.0*	*0.00*	*0.0*
2-Methylbenzothiophene	*0.0*	*0.00*	*0.0*
THIOPHENE TOTALS:	**0.0**	**0.00**	**0.0**

OTHER SULFUR GROUP	PPMV	GRAINS/100 SCF	PPMW
sulfur dioxide	*0.0*	*0.00*	*0.0*
Unidentified Sulfur	*0.0*	*0.00*	*0.0*
OTHER SULFUR TOTALS:	**0.0**	**0.00**	**0.0**

Value of "0.0" interpreted as below detectable limit of 0.1 PPM Mol.

PANTECHS LABORATORIES, INC.

Leaders in Petroleum Analytical Services
www.pantechs.com

Analytical Report

9/21/2021

Customer:	Lucid Energy Delaware	**Order:**	O148-2309
Location:	Red Hills Processing Complex	**Received:**	9/14/2021
Description:	Flare Scrubbers and Amine/Glycol Waste Streams	**Primary Contact:**	Jaylen Fuentes

REPORT DISTRIBUTION:

Jaylen Fuentes

All data reported in this Analytical Report is in compliance with the test method(s) performed as of the date noted above. The validity and integrity of this report will remain intact as long as it is accompanied by this page and reproduced in full. Any datafile (e.g. txt, csv, etc.) produced which is associated with the results in this report shall be considered for convenience only and does not supersede this report as the official test results. We reserve the right to return to you any unused samples received if we consider so necessary (e.g. samples identified as hazardous waste).

We appreciate you choosing Pantechs Laboratories. If you have any questions concerning this report, please feel free to contact us at any time.

Pantechs Laboratories, Inc. - Order: O148-2309 - Order Date: 9/14/2021
Order Description: Red Hills Processing Complex, Flare Scrubbers and Amine/Glycol Waste Streams

SAMPLE ID		COLLECTION DATA	
Operator	Lucid Energy Delaware	**Pressure**	48 psig
Location	Road Runner Plant	**Sample Temp**	N/A
Site	Flare Header	**Atm Temp**	88 F
Site Type	Plant	**Collection Date**	09/14/2021
Sample Point	Cold Side	**Collection Time**	12:20 PM
Spot/Comp	Spot	**Collection By**	Cody Carson
Meter ID		**Pressure Base**	14.730 psi
Purchaser		**Temperature Base**	60 F
Fluid	Gas	**Container(s)**	PLS022 , PL2473

GPA 2286 Gas Extended Fractional Analysis

COMPOUND	FORMULA	MOL%	WT%	GPM
HELIUM	He	0.0071	0.0016	0.0007
NITROGEN	N2	1.2421	1.9343	0.1363
CARBON DIOXIDE	CO2	0.0560	0.1370	0.0095
***OXYGEN+ARGON**	O2+Ar	0.0047	0.0084	0.0004
HYDROGEN SULFIDE	H2S	0.0000	0.0000	0.0000
METHANE	C1	88.3783	78.8166	14.9414
ETHANE	C2	9.0801	15.1779	2.4216
PROPANE	C3	0.6880	1.6865	0.1890
I-BUTANE	iC4	0.0644	0.2081	0.0210
N-BUTANE	nC4	0.1371	0.4430	0.0431
I-PENTANE	iC5	0.0350	0.1404	0.0128
N-PENTANE	nC5	0.0481	0.1929	0.0174
NEO-PENTANE	neC5	0.0013	0.0052	0.0005
HEXANES PLUS	C6+	0.2578	1.2481	0.0904
TOTALS:		**100.0000**	**100.0000**	**17.8841**

Value of "0.0000" interpreted as below detectable limit. Onsite H2S value is used in fractional if performed.
***Oxygen+Argon:** Compounds elute as single peak; additional testing required to distinguish each.*

LIQUID YIELD	C2+	C3+	C4+	C5+	26# Liquid	10# Liquid
GAL/MSCF	2.7958	0.3742	0.1852	0.1205	0.1868	
CALC PROP	**BTU/CF**	**Specific Gr.**	**Z Factor**	**Mol Weight**	**LB/SCF**	**Wobbe IDX**
DRY	1,097.4	0.6224	0.9975	18.64	0.0493	1,391.0
WATER SAT.	1,079.5	0.6227	0.9971	18.31	0.0485	
C6+ ONLY	4,475.3	3.0069		87.09		

Hexanes Plus Detail - Road Runner Plant:Flare Header:Cold Side:9/14/2021

C6 GROUP	FORMULA	MOL%	WT%
2,2-dimethylbutane	C6H14	0.000442	0.002117
2,3-dimethylbutane+cyclopentane	C6H14	0.004374	0.020954
2-methylpentane	C6H14	0.012563	0.060184
3-methylpentane	C6H14	0.007080	0.033917
benzene	C6H6	0.091849	0.398834
cyclohexane	C6H12	0.029683	0.138871
methylcyclopentane	C6H12	0.018108	0.084718
n-hexane	C6H14	0.019024	0.091135
TOTALS:		**0.183123**	**0.830730**

C7 GROUP	FORMULA	MOL%	WT%
1,1-dimethylcyclopentane+3-methylhexane	C7H16	0.002711	0.015101
2,2-dimethylpentane	C7H16	*0.000000*	*0.000000*
2,3-dimethylpentane	C7H16	0.000620	0.003454
2,4-dimethylhexane+ethylcyclopentane	C7H14	0.000059	0.000322
2,4-dimethylpentane	C7H16	*0.000000*	*0.000000*
2-methylhexane	C7H16	0.001847	0.010288
3,3-dimethylpentane	C7H16	*0.000000*	*0.000000*
cis-1,3-dimethylcyclopentane+3-Ethylpentane	C7H14	0.001783	0.009732
cycloheptane	C7H14	0.000019	0.000104
Methylcyclohexane+1,1,3-Trimethylpentane	C7H14	0.013266	0.072409
n-heptane	C7H16	0.004923	0.027422
toluene	C7H8	0.027159	0.139109
trans-1,2-dimethylcyclopentane+cis-1,2-Dimethylcyclopentane	C7H14	0.000951	0.005191
trans-1,3-dimethylcyclopentane	C7H14	0.002893	0.015791
TOTALS:		**0.056231**	**0.298923**

C8 GROUP	FORMULA	MOL%	WT%
1-ethyl-1-methylcyclopentane	C8H16	0.000194	0.001210
2,2,3-trimethylpentane	C8H18	0.003386	0.021501
2,2,4-trimethylpentane	C8H18	0.004538	0.028816
2,3,4-trimethylpentane	C8H18	0.000151	0.000959
2,5-dimethylhexane	C8H18	0.000320	0.002032
2-methylheptane+4-methylheptane	C8H18	0.000912	0.005791
3,3-dimethylhexane	C8H18	0.000292	0.001854
3-methylheptane	C8H18	0.000171	0.001086
cis-1,2-dimethylcyclohexane	C8H16	0.001204	0.007511
cis-1,3-dimethylcyclohexane	C8H16	0.000198	0.001235

cyclooctane	C8H16	0.000079	0.000493
ethylbenzene	C8H10	0.000424	0.002502
ethylcyclohexane	C8H16	0.000483	0.003013
m-xylene+p-xylene	C8H10	0.001805	0.010653
n-octane	C8H18	0.000960	0.006096
o-xylene	C8H10	0.000444	0.002620
trans-1,3-dimethylcyclohexane	C8H16	0.000068	0.000424
TOTALS:		**0.015629**	**0.097796**

C9 GROUP	FORMULA	MOL%	WT%
1,1,2-trimethylcyclohexane	C9H18	0.000087	0.000611
1,2,3-trimethylbenzene	C9H12	0.000063	0.000421
1,2,4-trimethylbenzene+tert-butylbenzene	C9H12	0.000151	0.001009
1,3,5-trimethylbenzene	C9H12	0.000068	0.000454
2,2,3-trimethylhexane	C9H20	*0.000000*	*0.000000*
2,2,4-trimethylhexane	C9H20	0.000225	0.001604
2,2-dimethylheptane	C9H20	0.000043	0.000307
2,3,4-trimethylhexane	C9H20	0.000086	0.000613
2,4,4-trimethylhexane	C9H20	0.000207	0.001476
2,5-dimethylheptane	C9H20	0.000259	0.001847
2-methyloctane	C9H20	0.000085	0.000606
3,4-dimethylheptane	C9H20	0.000080	0.000570
cis-1,2,trans-1,4-1,2,4-trimethylcyclohexane	C9H18	0.000031	0.000218
cis,cis-1,2,3-trimethylcyclohexane	C9H18	0.000068	0.000477
isopropylbenzene	C9H12	0.000053	0.000354
methylcyclooctane	C9H18	*0.000000*	*0.000000*
m-ethyltoluene+p-ethyltoluene	C9H12	0.000051	0.000341
n-nonane	C9H20	0.000218	0.001554
propylbenzene	C9H12	0.000052	0.000347
propylcyclohexane	C9H18	0.000105	0.000737
r-1,t-2,c-3-trimethylcyclohexane	C9H18	0.000020	0.000140
r-1,t-2,t-4-trimethylcyclohexane	C9H18	0.000072	0.000505
Unidentified C9	C9	0.000186	0.001326
TOTALS:		**0.002210**	**0.015517**

C10 GROUP	FORMULA	MOL%	WT%
1,2,3,4-tetramethylbenzene	C10H14	*0.000000*	*0.000000*
1,2,3,5-tetramethylbenzene	C10H14	*0.000000*	*0.000000*
1,2,4,5-tetramethylbenzene	C10H14	*0.000000*	*0.000000*
1,2-diethylbenzene	C10H14	*0.000000*	*0.000000*

1,2-dimethyl-3-ethylbenzene	C10H14	*0.000000*	*0.000000*
1,2-dimethyl-4-ethylbenzene	C10H14	*0.000000*	*0.000000*
1,3-diethylbenzene	C10H14	*0.000000*	*0.000000*
1,3-dimethyl-2-ethylbenzene	C10H14	*0.000000*	*0.000000*
1,4-diethylbenzene	C10H14	*0.000000*	*0.000000*
1,4-dimethyl-2-ethylbenzene	C10H14	*0.000000*	*0.000000*
1-methyl-2-isopropylbenzene	C10H14	*0.000000*	*0.000000*
1-methyl-2-propylbenzene	C10H14	*0.000000*	*0.000000*
1-methyl-3-isopropylbenzene	C10H14	*0.000000*	*0.000000*
1-methyl-4-isopropylbenzene	C10H14	0.000043	0.000321
2-methylnonane	C10H22	0.000089	0.000704
3-ethyloctane	C10H22	0.000054	0.000427
3-methylnonane	C10H22	*0.000000*	*0.000000*
4-methylnonane	C10H22	0.000029	0.000229
butylbenzene	C10H14	0.000022	0.000164
butylcyclohexane	C10H20	*0.000000*	*0.000000*
isobutylbenzene	C10H14	*0.000000*	*0.000000*
naphthalene	C10H8	0.000011	0.000078
n-decane	C10H22	0.000063	0.000498
sec-butylbenzene	C10H14	*0.000000*	*0.000000*
tert-butylcyclohexane	C10H20	*0.000000*	*0.000000*
Unidentified C10	C10	0.000186	0.001471
TOTALS:		**0.000497**	**0.003892**

C11 GROUP	FORMULA	MOL%	WT%
n-undecane	C11H24	0.000052	0.000452
pentylbenzene	C11H16	*0.000000*	*0.000000*
Unidentified C11	C11	*0.000000*	*0.000000*
TOTALS:		**0.000052**	**0.000452**

C12 GROUP	FORMULA	MOL%	WT%
n-dodecane	C12H26	0.000052	0.000492
Unidentified C12	C12	*0.000000*	*0.000000*
TOTALS:		**0.000052**	**0.000492**

C13 GROUP	FORMULA	MOL%	WT%
n-tridecane	C13H28	0.000026	0.000266
Unidentified C13	C13	*0.000000*	*0.000000*
TOTALS:		**0.000026**	**0.000266**

C14 GROUP	FORMULA	MOL%	WT%

n-tetradecane	C14H30	*0.000000*	*0.000000*
Unidentified C14	C14	*0.000000*	*0.000000*
TOTALS:		**0.000000**	**0.000000**

C15+ GROUP	FORMULA	MOL%	WT%
n-pentadecane	C15H32	*0.000000*	*0.000000*
Unidentified C15	C15	*0.000000*	*0.000000*
TOTALS:		**0.000000**	**0.000000**

Road Runner Plant:Flare Header:Cold Side:9/14/2021
ASTM D5504 Gas Sulfur Speciation

SUMMARY	PPMV	GRAINS/100 SCF	PPMW
COMPOUND TOTALS:	**0.3**	**0.02**	**1.7**
TOTAL SULFUR, AS MASS OF SULFUR (PPMW):			**1.0**

Speciation Detail

SULFIDE GROUP	PPMV	GRAINS/100 SCF	PPMW
hydrogen sulfide	*0.0*	*0.00*	*0.0*
carbonyl sulfide	*0.0*	*0.00*	*0.0*
Dimethyl Sulfide	*0.0*	*0.00*	*0.0*
Methyl Ethyl Sulfide	*0.0*	*0.00*	*0.0*
Diethyl Sulfide	*0.0*	*0.00*	*0.0*
t-Butyl Methyl Sulfide	*0.0*	*0.00*	*0.0*
Methyl sec-Butyl Sulfide	*0.0*	*0.00*	*0.0*
Ethyl n-Propyl Sulfide	*0.0*	*0.00*	*0.0*
Diisopropyl Sulfide	*0.0*	*0.00*	*0.0*
Propyl Sulfide	*0.0*	*0.00*	*0.0*
tert-Butyl Sulfide	*0.0*	*0.00*	*0.0*
SULFIDE TOTALS:	**0.0**	**0.00**	**0.0**

DISULFIDE GROUP	PPMV	GRAINS/100 SCF	PPMW
Carbon Disulfide	*0.0*	*0.00*	*0.0*
Dimethyl Disulfide	*0.0*	*0.00*	*0.0*
Ethyl Methyl Disulfide	*0.0*	*0.00*	*0.0*
Methyl i-Propyl Disulfide	*0.0*	*0.00*	*0.0*
Diethyl Disulfide	*0.0*	*0.00*	*0.0*
Propyl Methyl Disulfide	*0.0*	*0.00*	*0.0*
Methyl tert-Butyl Disulfide	*0.0*	*0.00*	*0.0*
Ethyl i-Propyl Disulfide	*0.0*	*0.00*	*0.0*
Methyl sec-Butyl Disulfide	*0.0*	*0.00*	*0.0*
Ethyl Propyl Disulfide+1-Heptanethiol	0.1	0.01	0.8
i-Propyl Disulfide	*0.0*	*0.00*	*0.0*
n-Propyl Disulfide	*0.0*	*0.00*	*0.0*
t-Butyl Disulfide	*0.0*	*0.00*	*0.0*
Diphenyl Disulfide	*0.0*	*0.00*	*0.0*
DISULFIDE TOTALS:	**0.1**	**0.01**	**0.8**

MERCAPTAN GROUP	PPMV	GRAINS/100 SCF	PPMW
Methyl Mercaptan	*0.0*	*0.00*	*0.0*
Ethyl Mercaptan	*0.0*	*0.00*	*0.0*

i-Propyl Mercaptan	*0.0*	*0.00*	*0.0*
n-Propyl Mercaptan	*0.0*	*0.00*	*0.0*
tert-Butyl Mercaptan	*0.0*	*0.00*	*0.0*
sec-Butyl Mercaptan	*0.0*	*0.00*	*0.0*
i-Butyl Mercaptan	*0.0*	*0.00*	*0.0*
n-Butyl Mercaptan	*0.0*	*0.00*	*0.0*
1,5-Pentanedithiol	*0.0*	*0.00*	*0.0*
2 and 3-Methyl-1-Butanethiol+Tetrahydrothiophene	*0.0*	*0.00*	*0.0*
1-Pentanethiol	*0.0*	*0.00*	*0.0*
1,2-Ethanethiol	*0.0*	*0.00*	*0.0*
1-Hexanethiol	*0.0*	*0.00*	*0.0*
Thiophenol	*0.0*	*0.00*	*0.0*
1,4-Butanethiol	0.1	0.01	0.9
1-Octanethiol	*0.0*	*0.00*	*0.0*
1-Nonanethiol	*0.0*	*0.00*	*0.0*
1-Decanethiol	*0.0*	*0.00*	*0.0*
MERCAPTAN TOTALS:	**0.1**	**0.01**	**0.9**

THIOPHENE GROUP	PPMV	GRAINS/100 SCF	PPMW
Thiophene	*0.0*	*0.00*	*0.0*
2-Methylthiophene+3-Methylthiophene	*0.0*	*0.00*	*0.0*
2-Ethyl Thiophene	*0.0*	*0.00*	*0.0*
2-Bromothiophene	*0.0*	*0.00*	*0.0*
2-Propylthiophene	*0.0*	*0.00*	*0.0*
2-Butylthiophene	*0.0*	*0.00*	*0.0*
3-Butylthiophene	*0.0*	*0.00*	*0.0*
Benzothiophene	*0.0*	*0.00*	*0.0*
2-Methylbenzothiophene	*0.0*	*0.00*	*0.0*
THIOPHENE TOTALS:	**0.0**	**0.00**	**0.0**

OTHER SULFUR GROUP	PPMV	GRAINS/100 SCF	PPMW
sulfur dioxide	*0.0*	*0.00*	*0.0*
Unidentified Sulfur	*0.0*	*0.00*	*0.0*
OTHER SULFUR TOTALS:	**0.0**	**0.00**	**0.0**

Value of "0.0" interpreted as below detectable limit of 0.1 PPM Mol.

1.0 INTRODUCTION

1.1 Summary of Scope of Supply

The vertical thermal oxidizer is intended to oxidize the combustibles present in the specified waste stream. This is understood to apply only when the system is operated in accordance with the operating conditions stipulated in the design summary and for the waste(s) in Section 1.2.1 below.

The firing rate of the system is controlled by maintaining a specified operating temperature inside of the thermal oxidizer while the waste gas flow rates fluctuate. Efficient destruction of the waste is achieved at a thermal oxidizer operating temperature set point controlled at approximately 1,600 ^{o}F. The temperature works in conjunction with the thermal oxidizer volume and its associated residence time to achieve the efficient destruction of the waste gas stream.

The thermal oxidizer design includes internal shop installed refractory insulation. The selected materials are designed for a long, trouble-free operating lifetime. The list below summarizes the services and equipment provided in Zeeco's supply.

One (1) Thermal Oxidizer Package Including:

- One (1) Vertical Thermal Oxidizer w/ Integral Stack (10'-0" O.D. x 76'-0" OAH)
- Shop Installed and dried to 500°F Refractory Lining
- One (1) GB Style Burner
- One (1) Fuel Control Rack w/ Local Control Panel
- One (1) Combustion Air Fan w/ Ducting

1.2 Process Description

The vertical forced draft thermal oxidizer is equipped with one (1) forced draft fuel gas GB-Series burner. When the purge cycle is complete, the burner pilot is ignited via electric ignition. Once the burner pilot flame is proven, the main burner flame is ignited. The thermal oxidizer is then allowed to achieve a waste permissive temperature of 1,600 ^{o}F, following the recommended field cure procedures and schedule in APPENDIX D. Waste gas is then injected around the burner via the inlet nozzle. This high temperature accompanied with thermal oxidizer volume, known as residence time, destroys the hydrocarbon constituents of the waste gas stream. The flue gases from the thermal oxidizer then exit to atmosphere.

A temperature controller (supplied by others in DCS) monitors the combustion product's temperature through a thermocouple input and modulates both the fuel gas and combustion air flows into the burner. This ensures that sufficient temperature is maintained to provide complete destruction of varying waste gas compositions.

The fuel gas alone is used for start-up, burner stability, and refractory cure. The normal heat release for burner stability on fuel gas is ~44.8 MM BTU/HR. When more heat is needed for refractory curing, or if the heat produced by the combustion of the waste gas during operation is not sufficient to maintain a thermal oxidizer temperature of 1,600 ^{o}F, a maximum fuel gas heat release of 75 MM BTU/HR is available from the burner.

Combustion air is supplied by the blower. All air enters the thermal oxidizer through the burner via the combustion air nozzle (N9) located on the thermal oxidizer. The flue gas exits the vent stack at an elevation of 76 feet.

1.2.1 Process Design Conditions for Waste Streams

Acid Gas Stream: Normal Operating Conditions (note 4)			Glycol System OVHD Stream		
Temperature	120	°F	Temperature	120	°F
Pressure (at Still Column)	3	psig	Pressure (at Still Column)	1	psig
Flow Rate	15.52	MMSCFD	Flow Rate	0.03	MMSCFD
	646,716.7	SCFH		1,175.0	SCFH
Mol. Wt.	41.2074		Mol. Wt.	49.7237	
Mass Flow Rate	74,750	lb/hr	Mass Flow Rate	154.10	lb/hr
Gross Heating Value (HHV)	38.63	BTU/SCF	Gross Heating Value (HHV)	2,585	BTU/SCF
Net Heating Value (LHV)	31.29	BTU/SCF	Net Heating Value (LHV)	2397	BTU/SCF
Gas Composition			Gas Composition		
Carbon Dioxide	88.74	mol%	Carbon Dioxide	0.17605	mol%
Hydrogen Sulfide	0.354	mol%	Hydrogen Sulfide	0.00483	mol%
Nitrogen	0.00940	mol%	Nitrogen	0.00820	mol%
Methane	2.0149	mol%	Methane	9.80494	mol%
Ethane	0.3716	mol%	Ethane	14.09657	mol%
Propane	0.1227	mol%	Propane	18.96782	mol%
i-Butane	0.0098	mol%	i-Butane	2.56932	mol%
n-Butane	0.02933	mol%	n-Butane	9.91378	mol%
i-Pentane	0.00224	mol%	i-Pentane	3.61200	mol%
n-Pentane	0.00300	mol%	n-Pentane	4.83441	mol%
Hexane	0.0007231	mol%	Hexane	3.17734	mol%
Heptane	0.000088	mol%	Heptane	1.60118	mol%
Cyclopentane	0.000665	mol%	Cyclopentane	1.96478	mol%
Cyclohexane	0.000743	mol%	Cyclohexane	1.87261	mol%
Methylcyclohexane	0.000133	mol%	Methylcyclohexane	1.01041	mol%
2,2,4-Trimethylpentane	0.000006	mol%	2,2,4-Trimethylpentane	0.09706	mol%
n-Octane	0.0000054	mol%	n-Octane	0.13357	mol%
Water	8.32375	mol%	Water	12.72109	mol%
Benzene	0.01188	mol%	Benzene	8.93524	mol%
Toluene	0.00250	mol%	Toluene	3.43888	mol%
Ethylbenzene	0.00026	mol%	Ethylbenzene	0.61876	mol%
p-Xylene	0.00000	mol%	m-Xylene	0.00000	mol%
o-Xylene	0.00018	mol%	o-Xylene	0.43941	mol%

Location:

Site Elevation	3070	FASL
Max Ambient	105	F
Min Ambient	0	F
Wind Speed	100	mph

Notes:

1. Above information is applicable to the request for quote for a Thermal Oxidizer.
2. Unit to achieve best destruction efficiency possible, 99% minimum if possible
3. Unit to be designed with two separate connections; one connection to be designated for the amine acid gas stream and one connection to be designated for the glycol system OVHD stream
4. Amine Acid Gas Stream is the amine OVHD gas combined with the Amine Flash Gas, to increase the heating value
5. Fuel gas is avaliable
6. Excess capacity of 10% requested

Zeeco has considered that the Amine Flash Gas and Amine OVHD Gas will be introduced to the unit on separate connections. While the above composition does not cause a combustion instability problem, injecting the Flash Gas and OVHD Gas together can cause combustion instability during start-up or process upset conditions, when the heating value fluctuates. We will be happy to discuss this point in additional detail if necessary. Please contact us.

1.2.2 System Performance @ 1600°F

Stack Emission	Expected Performance
Destruction Efficiency	> 99.9% of all Hydrocarbons
NOx, ppm_{vd} @ 3% O2	50
CO, ppm_{vd} @ 3% O2	50

Note: These values are understood to apply only when the system is operated in accordance with the above operating conditions and waste(s) stipulated in section 1.2.1 above, and design temperature.

1.2.3 Combustion Air Performance

Reference AirPro Fan vendor literature in APPENDIX G for combustion air blower performance curve information.

1.2.4 Burner Performance

Reference the burner capacity curve (32339-G009A-001) in APPENDIX D for burner performance information.

1.3 Equipment Description

The forced draft thermal oxidizer system is described below.

1.3.1 Burner (Reference Zeeco Drawing 32339-G006A-001)

The forced draft burner assembly consists of one (1) GB Series gas burner. The burner is complete with the following features:

- One (1) GB Series (75 MM BTU/HR) forced draft burner with 10:1 fuel gas turndown.
- AR/GS-1 HEI electric spark ignited pilot assembly (85,000 BTU/HR Intermittent Pilot) NOTE: During normal operation, the purge air to cool the pilot must remain on even when pilot is not in operation.
- One (1) 42-3/4" fabricated plate flange burner mounting connection.
- One (1) 4" 150# RFWN fuel gas connection.
- One (1) 2" 150# RFWN glycol vent connection.
- One (1) 1-1/2" 150# RFWN pilot mounting connection.
- One (1) 2" NPS sight port assembly with purge connection.
- Two (2) 2" FNPT swivel scanner mount assemblies with purge connection.
- One (1) 1-1/2" 150# RFWN drain connection w/ blind.
- A-36 carbon steel construction.
- 60% Al_2O_3 burner tile, shipped in eight (8) loose segments.
- Paint per Zeeco document 32339-4030 (See APPENDIX E).

1.3.2 Thermal Oxidizer (Reference Zeeco Drawing 32339-G064A-001)

The thermal oxidizer design is a vertically fired unit supported by legs, and is designed to operate at 1600 °F. The thermal oxidizer is designed and furnished with the following companion features for the Zeeco burner design:

- Nominal 10'-0" O.D. integral stack x 76'-0" overall height.
- One (1) 42-3/4" fabricated plate flange burner mounting connection
- One (1) 30" 150# RFWN Amine waste gas connection.

- One (1) 40" fabricated plate flange combustion air connection.
- Two (2) 1-1/2" RFWN thermocouple connections.
- Two (2) 4" RFWN sample connections w/ blind.
- One (1) 4" RFWN O_2 analyzer connection.
- One (1) 4" sight port connection w/ purge and blast gate.
- Two (2) 2" RFWN spare scanner connections w/ blind.
- One (1) 1-1/2" RFWN drain connection w/ blind.
- One (1) 36" fabricated plate flange manway w/ davit.
- A-36 carbon steel shell with 1/8" corrosion allowance.
- Two (2) lifting trunnions for use with spreader beam and tailing lug.
- One (1) lot of ladders & platforms consisting of two (2) service platforms and one (1) step off platform. Ladders & platforms are trial fit in the shop, then shipped loose to prevent damage. All safety gates are the same size and interchangeable.
- Shop fit stack strakes (shipped loose to prevent damage)
- Shop installed castable refractory lining dried out to 500 °F.
- One (1) lot of rainshield material (shipped loose to prevent damage)
- One (1) 304SS leg mounted grounding lug.
- Paint per Zeeco document 32339-4030 (See APPENDIX E).

1.3.3 Refractory Lining (Reference Zeeco Drawing 32339-R064A-001)

The refractory supplied includes insulating castable and medium weight castable. The castable refractory is held in place using 310 stainless steel anchors located on 9" centers. Refractory anchors and castable are shop installed and dried to 500°F.

Thermal Oxidizer Floor
4" thick 3000 °F, medium weight castable, backed with 2" thick 2300 °F light weight insulating castable with 310 SS Hanlock HL-201-4 (or equal) anchors on 9" centers.

Combustion Zone (First ~ 10' of Thermal Oxidizer Vessel)
4" thick 3000 °F, medium weight castable, backed with 2" thick 2300 °F light weight insulating castable with 310 SS Hanlock HL-201-4 (or equal) 3" tall anchors on 9" centers.

Mixing Zone (Final ~ 51'-9" of Thermal Oxidizer Vessel)
4" thick 2300 °F, light weight insulating castable, with 310 SS Hanlock HL-208-7 (or equal) anchors on 8" centers.

Additional details may be seen in the general arrangement drawings included in APPENDIX D.

1.3.4 Instrumentation & Controls

The Zeeco supplied Control System includes all field-mounted instrumentation and valves, along with controls and rack mounted piping for the burner management system (BMS). Interconnecting conduit, wiring, tubing, and piping between the rack and the Thermal Oxidizer is supplied and field installed by others. For more information, please see Zeeco P&ID drawings 32339-04-11001-001 and 32339-04-11001-002 in APPENDIX D.

Zeeco has supplied a Burner Ignition System, one (1) temperature transmitter (TT-5500), five (5) Pressure Gauges (PI-5501A, -5501B, -5502A, -5503A, -5503B), two (2) Flame Scanners (BE/BSL-5501/5502), two (2) thermocouples (TE-5500 & TE-5504), and the burner controls rack. Refer

to the Zeeco Shipping List located in APPENDIX F for reference to shipped loose items. The Zeeco supplied instruments and controls (above) are certified to Class I Div. II Group C & D operation.

The P & ID drawing series is included in APPENDIX D (for the Zeeco supplied controls and instruments) to provide detailed information on the instrumentation and mounting. Detailed instrument specification sheets and selected vendors are included in APPENDIX E (documents) and APPENDIX G (vendors).

1.3.5 Combustion Air Blower (Reference AirPro fan drawing in Appendix G)

One (1) Combustion air blower complete with the following features:

- Designed for 23,238 CFM @ 3.5" w.c.
- AirPro Model BIHS290, Arrangement 4 Fan Assembly
- 30 hp., 1760 rpm, 460/60/3 Premium Eff. TEFC Motor
- Silencer w/ bird screen
- Flanged inlet/outlet connections
- Outlet Flex Connector
- Bolted Access Door
- Drain Connection with plug

Appendix A

Customer Process Data Sheets

PRIMARY FLARE

BY: GLM | JOB NO: 6353 | PAGE 1 OF 2

DATE: 7/28/2011 | ITEM NO.: FL-991

CUSTOMER: Southcross Energy

PLANT: Woodsboro Plant

SERVICE: PRIMARY FLARE

QUANTITY: 1 SIZE: By Mfgr

SAULSBURY INDUSTRIES

SAULSBURY Engineering & Construction

Texas Registered Engineering Firm F-518

Work by Saulsbury Engineering: Rev RFQ

REV.	DATE	BY	APPR.	NO.	FIRM
				RFQ	SE&C
	7/29/2011	GLM	WST		

Request for Quotation

Design Cases	Cold Flare Riser	Warm Flare Riser	
Flow Rate (Lb/Hr)	392,000	180,000	
Controlling Point Sources	PSV-501	PSV-361,161,162,163	
Molecular Weight	18-19	44	
Temperature, ºF at inlet to Riser	-50 to -100	+250	
Maximum Pressure at Inlet Nozzle, PSIG	50	50	
Smokeless Operation Required (Yes/No)		Yes, Note 3	
Lower Heating Value, BTU/SCF			
Composition (Mol % / Weight %)			
Nirtogen			
Carbon Dioxide			
Methane	80-85 Mol%		
Ethane			
Propane		Essentially 100%	
Butanes			
Pentanes			
Hexanes Plus			
Hydrogen			
Oxygen			
TOTAL			
Flare Riser Diameter & Inlet Nozzle Size, Note 2	16"	10"	
Max Wind During Flaring Operation, MPH	30	30	

Notes 1) Elevated, Self-Supported Flare

2) Flare will consist of 2 risers with sizes as shown. As an option, vendor may propose different size with rationale.

3) Smokeless Rate - 20% of Warm Flare Rate

4) Features not specifically identified should be similar to the Zeeco SO 17716 or Ref T80793F.

5) Instrument Air available at 85-125 psig.

6) Provide radiation shielding for any JB's, panels, boxes, or other electrical equipment if required to prevent operating temp out of spec during extended release.

7) Supply heavy duty vaneaxial blower air assist, non-overloading two speed TEAO motor and manually adjustable prop.

PRIMARY FLARE

BY: GLM | JOB NO: 6353 | PAGE 2 OF 2

DATE: 6/1/2011 | ITEM NO.: FL-991

CUSTOMER: Southcross Energy

PLANT: Woodsboro Plant

SERVICE: PRIMARY FLARE

QUANTITY: 1 SIZE: By Mfgr

SAULSBURY INDUSTRIES

SAULSBURY Engineering & Construction

Texas Registered Engineering Firm F-518

Work by Saulsbury Engineering: Rev RFQ

REV.	DATE	BY	APPR.	NO.	FIRM
Request for Quotation	7/29/2011	GLM	WST	RFQ	SE&C

Power Available	460Vac 3 P 60 Hz	120 Vac 1 P 60 Hz	
Control Power	120 Vac 1 P 60 Hz		
Electric Classification Area	Class 1, Div 2, Grp C,D, Temp T2B		
Pilot Gas	Pipeline gas, 100 psia		
Utility Gas	Pipeline Gas, 100 psia		
Purge Reduction	Pipeline Gas, 100 psia		
Flare Tip	304SS		
Maximum Allowable Thermal Radiation, BTU/Hr/SqFt	1750 - Note 6		
At Grade, Specify Distance from Flare Base, Ft	100		
Stack Support	Self Supported		
Structural Design Wind Velocity, MPH	100		
Seismic Zone	1		
Flare Knockout Drum	NO		
Design Pressure, PSIG / Temperature, F / Corr Allow	50 psig		
ASME Code Stamp / National Board Registration	NO		
Ignition Device (Note 8)	FFG		
Enclosure	Class 1 Div 2, Grp C,D, T2B		
Ladder Platforms	No		
Special Instrumentation	Air Assist Flow switch		

NOTES:

1) Applicable specifications: NEC NEMA AISC
2) ASME B31.3 Piping and Shell, AWS 1.1 Welding , and ASCE 7-05 Structural specs are required.
3) Use Rosemount 3051 pressure transmitters for all pressure insrumentation, Rosemount as applicable elsewhere.
5) Ignition system: Manual with Automatic relight Pilot status monitors
6) No point on the ground is to receive more than 2000 BTU/hr/sq ft under any condition.
7) Specify freight charges with proposal, and include drawings, schedules and deliveries.
8) FFG = Flame Front Generator type.
9) Direct high energy spark ignition HEI with optical pilot monitoring device.

Appendix B

Drawings

ZEECO Drawing List

Drawing Number	Rev	Description
SC-6349	0	AFDSGA-14/50 Flare Tip Assembly
SC-6355	3	General Arrangement
SC-6356	1	Loading Data
SC-6357	1	Template & Anchor Bolt Drawing
SC-6358 s1-6	2	Riser Detail
SC-6359	0	Piping Arrangement
SC-6360 s1-3	0	Piping Detail
WC-3790 s1-4	0	Control Panel Schematic & Assembly
WC-3791	0	T/C Junction Box Control Panel Schematic & Assembly
WC-3792	0	LMC-3-T/S FFG Ignition Rack Assembly
YA-1491 s1-2	0	P & I Diagram

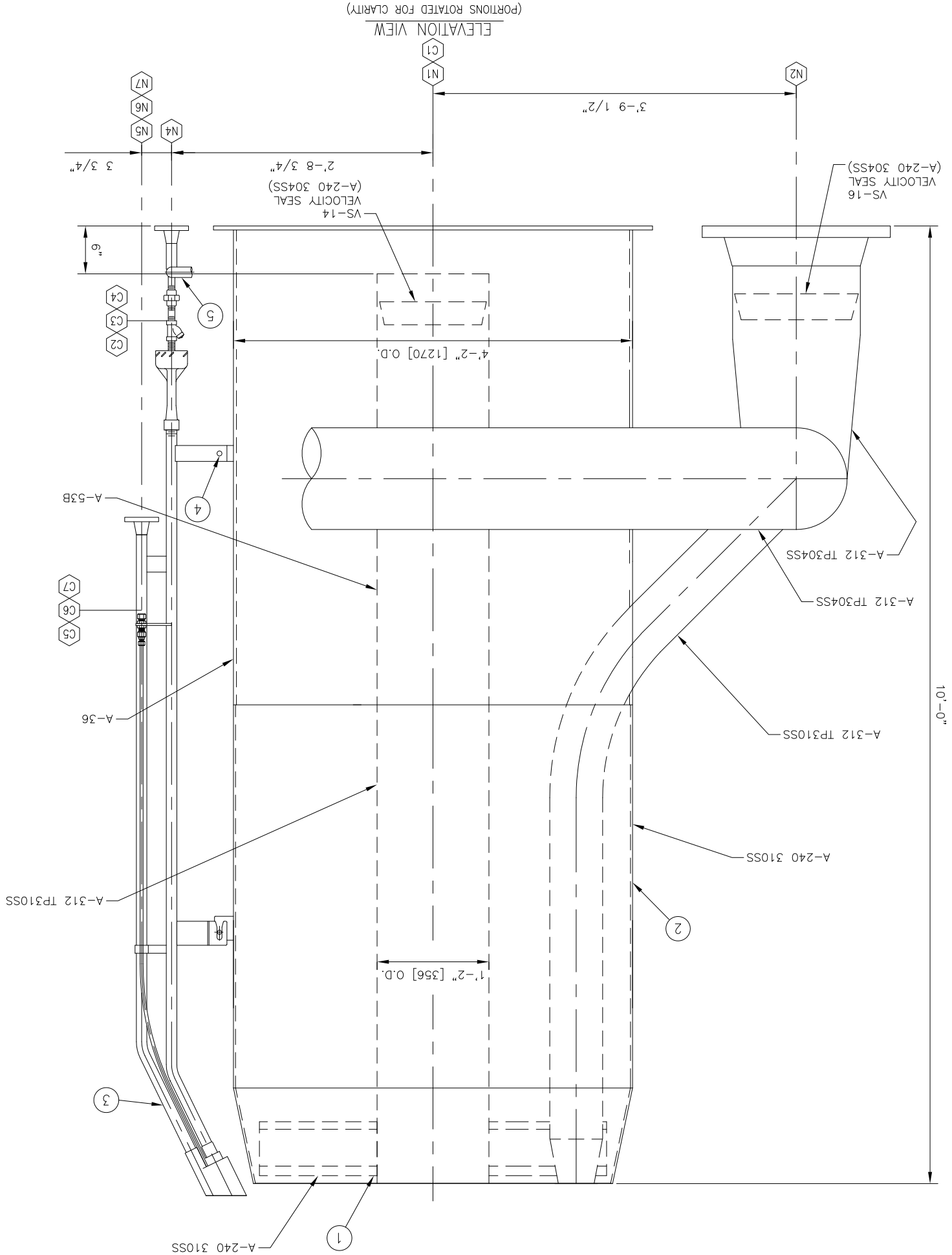

– NOZZLE LEGEND –

ITEM	SERVICE	SIZE	RATING	TYPE	SCH/BORE	FLG. MAT'L
N1	FLARE GAS INLET	55" O.D. X 1/2" THK. X 50 1/4" I.D. W/ (44) 5/8"ø HOLES ON A 52 1/2" B.C. EQ. SPCD.				A-36
N2	COLD GAS INLET	16"	150#	RFWN	S/10S	A-182 F304
N4	PILOT MANIFOLD GAS INLET	1"	150#	RFWN	S/40	A-105
N5-N7	IGNITION GAS INLET	1"	150#	RFWN	S/40	A-182 F310
C2-C4	PILOT GAS INLET	1/2"	N/A	FNPT	N/A	CF8M
C5-C7	T/C GUIDE TUBE	1/2"	N/A	TUBE	N/A	N/A
C1	WARM GAS INLET	14"	N/A	BW	S/10	A-53B

NO.	DATE	REVISION DESCRIPTION	BY	CKD.	APP.
0	23AUG11	ISSUED FOR APPROVAL			KAL

ZEECO, INC.
2215I EAST 9Ith STREET
BROKEN ARROW, OK 74014
PHONE: (918) 258-8051
FAX: (918) 251-5519
www.zeeco.com
sales@zeeco.com

PROPRIETARY DATA IS INCLUDED IN THE INFORMATION DISCLOSED HEREIN AND IS THE PROPERTY OF ZEECO,INC. THIS INFORMATION IS SUBMITTED IN CONFIDENCE AND ZEECO, INC. AND ALL RIGHTS OF DESIGN OR INVENTION MUST BE USED IN CONNECTION WITH WORK DONE FOR ARE RESERVED. UNAUTHORIZED DISCLOSURE OR USE IS PROHIBITED BY LAW.

AFDSGA-14/50 FLARE TIP ASSEMBLY (TAG: FL-991)

FOR: SE & C

B-SC-6349 SHT. 1 OF 1

DRAWN	DATE
KAL	23AUG11
CHK'K	APP'D
KAL	
SCALE	REV
NONE	0

DRAWING NUMBER

– PARTS LIST –

ITEM	QTY	DESCRIPTION	PART NO	MATERIAL
1	1	AFDSGA-14/50 CENTER ASS'Y	KC-2207	310SS/CS
2	1	AFDSGA-14/50 PLENUM ASS'Y	KC-2208	310SS/CS
3	3	HSLF-Z-RT/C PILOT NIPPLE ASSEMBLY	MB-1562	310SS
		COMPLETE WITH:		
		HSLF-Z MIXER BODY		A-743 CF3M
		HSLF-Z MIXER SPUD		F837 18-8
		PIPE		A-312 TP316
		STRAINER W/ PLUG		A-743 CF8M
4	3	MACHINE BOLT	1/2"ø X 1 1/4" LG	A-193 B8
		W/ HEAVY HEX NUT		A-194 Gr 8
5	1	PILOT MANIFOLD ASS'Y	KC-2209	CS

– NOTES –

1. PILOT MIXER ORIFICE DRILLED: #55ø [1.32 mm]
2. PILOT GAS CONSUMPTION TWO CASES:
PILOT GAS CONSUMPTION CASE: 78 SCFH @ 15 PSIG PER PILOT
[2.09 Nm ^{3}/HR @ 1.05 kg/cm ^{2}g]
PILOT GAS CONSUMPTION CASE: 75 SCFH @ 15 PSIG PER PILOT
[2.01 Nm ^{3}/HR @ 1.05 kg/cm ^{2}g]
3. PILOT ORIFICE DRILLING BASED ON TWO CASES:
CASE 1: 908 BTU/SCF (LHV)
[8542 kcal/Nm ^{3}] GAS WITH 0.57 SP. GR.
CASE 2 RECOVERY CASE: 959 BTU/SCF (LHV)
[9021 kcal/Nm ^{3}] GAS WITH 0.60 SP. GR.
4. THE FLARE TIP REQUIRES A CONTINUOUS PURGE OF COLD=1040 SCFH
[27.86 Nm ^{3}/HR] AND WARM=290 SCFH [7.77 Nm ^{3}/HR]
[10.18 Nm ^{3}/HR] OF A GAS THAT WILL NOT GO TO DEW POINT AT
OPERATING TEMPERATURES.
5. ALL FLANGE BOLTING TO STRADDLE NORMAL CENTERLINES.
6. ALL EXTERNAL CARBON STEEL SURFACES TO BE PREPARED PER SSPC-SP6. PRIME WITH ONE COAT INORGANIC ZINC (2 1/2 MILS DFT MIN.) PAINT ONE COAT HIGH TEMP ALUMINUM (1 MIL DFT MIN.)
7. ALL TESTING PER INSPECTION TEST PLAN DOCUMENT NO. 20238-4010
8. THE PILOT THERMOCOUPLE IS FOR ON/OFF INDICATION ONLY, NOT FOR ACCURATE MEASUREMENT OF THE PILOT FLAME TEMPERATURE.
9. WHEN INSTALLING THE CENTER ASSEMBLY THE GAS EXIT ARMS MUST BE CENTERED ON THE PILOT AS PER THE PLAN VIEW.
10. APPROXIMATE WEIGHT FOR FLARE TIP ASS'Y: 4613 LBS [2092 KG]
11. APPROXIMATE WEIGHT FOR EACH PILOT: 100 LBS [45 KG]

JOBSITE: SOUTHCROSS, TX

END USER: ENOGEX

S.O. NO.: 20238	P.O. NO.: 6353-004	APP'D SKS

Kristin R. Long 8/24/2011 11:29:27 AM Q:\Job-Information\Flares\20000\20238 Soulsbury Engineering\Drafting\Customer\SC-6349-S1R0.dwg KAL 8/24/2011 9:39:37 AM

Saulsbury Industries
SAULSBURY Corporate Office: 2951 E Interstate 20, Odessa, TX 79766 · P: 432-366-3686 · F: 432-368-0061

10231: Lucid Energy – Road Runner Flare Study

Background

The purpose of the flare and relief valve study performed by Saulsbury Industries was to evaluate the hydraulics in both the main flare header system and the inlet/outlet piping on the individual relief devices. Several different scenarios were considered when evaluating the flare header system hydraulics and flare stack/tip specifications for maximum relieving loads. Some of these scenarios include, but are not limited to:

- Point-source failure of an instrument or controller (i.e. control valve failure into 100% open position)
- External pool fire around an area containing single or multiple pieces of equipment whose relief valves discharge into the flare header. Per API 521 guidelines, a fire circle area of 2500 ft^2 was used to determine which pieces of equipment could be subjected to a common pool fire.
- Blocked-in flow of single or multiple pieces of rotating equipment, causing the equipment to deadhead and reach the designated relieving pressure.
- Heat exchanger tube rupture
- Process control vents to flare, whose purpose is to provide "pre-relief" on equipment before a relief valve opens during operating pressure upsets.

The flare system consists of both a carbon steel "warm" flare header and a stainless steel "cold" flare header. Each of these individual flare headers are routed to dedicated flare risers on the main flare stack, where they are combined into a single flare-tip at the top of the stack. The stainless steel flare header is designed to collect and handle relief valve discharges from the cryo plant area (routed to/from the UOP-provided V-403 Cold Drain Tank). Some relief valves in the cryo plant area have relieving temperatures far below the 0°F minimum temperature limit for standard carbon steel piping and would otherwise potentially result in significant thermal stress or shock if they are routed to the carbon steel "warm" flare header piping. Only relief valves from the cryo plant equipment will be routed into the stainless steel "cold" flare header. All other relief valves in the plant that are routed to flare and have a relieving temperature comfortably above 0°F are discharged into the warm flare header.

The Aspen Flare System Analyzer v10 software was used to evaluate and confirm flare header hydraulics once the location and arrangement of the plant relief devices was known. The software utilizes isothermal compressible flow models to predict pressure drop throughout the flare system, as well as the Peng-Robinson equation of state to approximate outlet temperatures from relief valve discharges based on the composition of the relieving fluid.

Assumptions

1) Inlet and outlet piping configurations are an approximation based on information available at the time the flare study was performed. However, small changes in pipe routing/distance will not affect the overall operation of the flare system or adversely affect the reported results.
2) Residue and flash gas compressor blowdown (manual operation) do not discharge into the flare header, and therefore the flare system analysis excludes this scenario.
3) Bypass valves around control valve stations are assumed, via standard plant operating procedures, to be normally closed during plant operation. Inadvertent opening to full 100% trim capacity in these bypass globes valves are not considered.
4) Mach number in sub-headers and main header is limited to 90% of sonic velocity. The exception this is when a "sonic break" occurs during a sudden size change at a tie-point between a relief valve discharge lateral into the larger main flare header or sub-header.
5) Conventional PSV backpressure limit: 10% of PSV set pressure for non-fire scenario
6) Conventional PSV backpressure limit: 21% of PSV set pressure for fire scenario
7) Balanced Bellow PSV backpressure limit: 40% of PSV set pressure
8) Pilot-Operated PSV backpressure limit: 80% of PSV set pressure
9) Relief valve inlet piping pressure drop limit: 3% of PSV set pressure

Flare Headers

The carbon steel "warm" flare header/system at the Lucid Energy Road Runner gas plant consists of the following:

- 12" plant flare header up to the warm flare KO drum with the following sub-headers:
  - 8" flare header branch in the mol sieve dehydration area rack
  - 10" flare header branch in refrigeration area rack
  - 12" flare header branch in amine and TEG regeneration area rack
  - 12" flare header branch in stabilizer area rack
- 72" OD x 30'-0" S/S warm flare knockout drum, 100 psig @ 350°F design
- 12" flare header from the warm flare KO drum up to the flare stack inlet

The stainless steel "cold" flare header/system at the Lucid Energy RoadRunner gas plant consists of the following:

- 12" plant flare header up to the cold drain tank
- 54" ID x 30'-0" S/S cold drain tank, 150 psig @ 150/-200°F design
- 14" flare header from the cold drain tank to the flare stack inlet

Saulsbury Industries
SAULSBURY Corporate Office: 2951 E Interstate 20, Odessa, TX 79766 · P: 432-366-3686 · F: 432-368-0061

Flare Stack/Tip Design

The flare tip is an air-assisted, sonic-tip flare that contains two, staged vane-axial blowers that allow the flare to achieve smokeless combustion for all relieving flow rates at 20% or less of the maximum design case outlined in the flare datasheet. The sonic-tip flare is designed to take as much pressure drop at the tip as possible because this not only improves performance, it also increases longevity of the tip itself. The reasoning behind this is that at a higher pressure, and thus higher exit velocity, the flame is more erect and does not lean on the tip and create a hot spot, which over time could cause failure. In addition to improved lifespan, the smokeless performance of the flare is aided by the higher exit velocity – so at full flow rates the flare will likely be 100% smokeless because the air mixes in better at the tip than it would if the flare gas was exiting at lower velocities. By sizing the flare to take the max pressure drop allowable, the flare riser piping is smaller, the tip is smaller and this leads to a more economical flare system.

Each flare riser also contains a velocity seal to reduce the amount of purge gas required to prevent oxygen intrusion into the flare header systems. Furthermore, each dead-leg in the overall plant flare header system contains a purge gas connection at the very end of these headers to ensure that all areas of the flare header maintain a constant sweep and positive pressure.

The flare contains a variable-speed vane axial blower (150 HP) operating on a VFD, where the blower speed ramps up and down depending on the flare gas header flow rate that is present. The blower on the flare is mostly required for lower flowrates where the velocity and operating pressure of the relieving fluids in the flare stack are much lower than the maximum relieving cases by which the tip and flare system were designed for. During these lower flow rate scenarios, much less air is induced by turbulent mixing at the flare tip due to the low pressure drop at the tip, and therefore the blower is needed to help keep the flare smokeless at reduced rates. The blower speed, and thus air flow capacity is controlled via flare header gas pressure vs. air flow control curves provided by Zeeco. These curves relate pressure in the flare gas header to the % Blower VFD that should be applied.

If the event that a simultaneous flaring event should occur in both gas headers (cold and warm flare headers), then the flow rate that is measured in each header is converted into its equivalent %VFD per the charts provided by Zeeco. These percentages are then summed together to give the final applied %VFD.

Summary of Maximum Flare Relief System Cases

The attached plant flare datasheet summarizes the maximum flow cases by which the flare stack and blower were sized for. The two controlling cases for the cold flare header were wide-open failure of the JT-valve (327,800 lb/hr flow) and an external pool fire around the NGL Surge Tank (200,756 lb/hr flow). Likewise, the controlling case for the warm flare header was an external fire around the Condensate Surge Tank (364,824 lb/hr flow) one of the Amine Contactor level control valves failure (210,253 lb/hr). The initial main flare header hydraulics was evaluated using these estimated relief loads to determine the required flare header diameters.

The process data identified on the flare stack datasheet was an up-front estimate of expected maximum relieving loads at the time of the flare stack purchase. However, the actual maximum relieving cases/loads that were analysed during detailed design were less than or very close to the capacity loads used to design the flare stack, thus confirming the flare stack and blowers contain adequate capacity to handle all relieving cases in the plant.

The following table is a summary of some of the largest relieving loads into the warm and cold flare headers that were determined during detailed design. The results of all cases that were evaluated will be included in the appendix of this report.

System	Relieving Case	Relieving Rate
Warm Flare	FIRE: Mole-Sieve Area	89,656 lb/hr
Warm Flare	FIRE: Amine HMO Heater	109,693 lb/hr
Warm Flare	Fire: Condensate Surge Tank Area	461,914 lb/hr
Warm Flare	Fire: Stabilizer Skid Area	221,816 lb/hr
Warm Flare	OPER: Refrig. Compressor Blocked Flow	221,526 lb/hr
Warm Flare	OPER: LV-1201 (or) LV-1202 Control Failure	210,253 lb/hr
Warm Flare	OPER: Demethanizer Overpressure CV Open	345,000 lb/hr
Cold Flare	OPER: PCV-402B (JT-Valve) Control Failure	327,800 lb/hr
Cold Flare	FIRE: NGL Product Surge Tank	268,265 lb/hr
Cold Flare	FIRE: UOP Process Skids Area	212,722 lb/hr

The flare header hydraulics of both main flare headers, all flare sub-headers, and individual relief valve discharge piping laterals were evaluated utilizing all expected relief loads to verify that the backpressure induced by a single or multiple relief valves of various types (conventional, balanced, pilot-operated) would not cause backpressure issues on the operation of the relief valves. Based on the reported flare study results, all sections of the warm and cold flare headers contain adequate hydraulic capacity to handle all of the relief loads from the various emergency scenarios that were evaluated. The flare header diameters and relief valve discharge piping laterals are of adequate diameter to prevent backpressure in the system from building up that would either exceed the backpressure limitations set forth by the relief valve type and/or the design/test pressures of the flare knockout drums, the main flare header piping, and the individual relief valve discharge piping laterals.

The maximum backpressure seen in the cold flare header at the Cold Drain Tank, V-403, occurs during a JT-Valve failure scenario (PCV-402B wide-open) that would overpressure the demethanizer tower. The backpressure at the Cold Drain Tank inlet nozzle is 8 psig, which is well below the 150 psig design pressure of this vessel. Likewise, the maximum backpressure seen in the warm flare header at the Warm Flare KO Drum, V-5000, occurs during a fire near the Condensate Surge Tan. The backpressure at the Warm Flare KO Drum inlet nozzle is 86 psig, which is below the 100 psig design pressure of this vessel.

Warm and Cold Flare Knockout Drum Performance

The primary and critical function of the flare knockout drums on the cold and warm flare headers is to separate and remove any incoming liquid streams in the flare header that are present during relieving events or if condensation occurs in the flare header during cold ambient temperatures. The main flare headers and all plant sub-headers contain a slope of 1” per 100 ft to ensure that the main headers remain devoid of liquid inventory that would cause liquid slugs and/or water hammer during high-load relieving events.

Per API 521, flare knockout drums are sized to remove a maximum droplet size of between 300-600 microns from the incoming fluid stream to prevent large quantities of liquid carryover to the flare tack/tip in the form of liquid droplets. Utilizing the terminal liquid velocity and horizontal gas flowing velocity equations outlined in API 521 and the GPSA Engineering databook, the attached results indicate that both the Warm Flare KO Drum, V-5000, and the Cold Drain Tank, V-403, are sufficiently sized to achieve separation of liquid droplets below the 600 micron limit established by API 521.

When the Warm Flare KO Drum contains a liquid level above its secondary high level switch alarm point (67% full), the vessel is still capable of removing 300 micron and larger diameter liquid droplets from the incoming fluid stream. The incoming fluid streams that were analysed for the liquid level vs. droplet removal for the Warm Flare KO Drum were the 364,824 lb/hr relieving flow created during an external fire near the Condensate Surge Tank. When the Cold Drain Tank contains a liquid level above its high level alarm point (67% full), the vessel is still capable of removing 500 micron and larger diameter liquid

droplets from the incoming fluid stream. The incoming fluid stream that was analysed for the liquid level vs. droplet removal for the Warm Flare KO Drum was the 327,800 lb/hr relieving flow created during a JT-valve failure.

Radiation Levels

During evaluation of the maximum design cases for flaring events, Zeeco was instructed to design the height of the flare to be such that a maximum radiation exposure level of 1,750 BTU/hr-ft^2 would be encountered at a ground-level point 100 feet away from the base of the flare. This specification takes into account a radiation intensity of 250 BTU/hr-ft^2 for solar radiation, and 1,500 BTU/hr-ft^2 radiation intensity for combustion at the flare tip during maximum relieving scenarios.

Based on the attached radiation isopleths supplied by Zeeco, there will be no relieving cases where radiation intensity in excess of 1,750 BTU/hr-ft^2 will be encountered at any point further than 100 feet away from the flare stack. Since the nearest piece of equipment to the flare stack is ~200 feet away (flare flow meters and platform), the radiation isopleths indicate that excessive radiation exposure will not be encountered during normal maintenance and routine operator rounds, with exception to inspecting the blower at the base of the flare.

Appendix A: Flare Design Basis

FLARE

BY: EMG | JOB NO: 10231 | PAGE 1 OF 2

DATE: 5/3/2017 | ITEM NO.: FL-5100 FLARE

CUSTOMER: Lucid Energy

PLANT: Roadrunner

SERVICE: Flare

QUANTITY: 1 SIZE: 4' - 10" DIA X 100' - 0" OAH

SAULSBURY INDUSTRIES

Texas Registered Engineering Firm F-518

Work by Saulsbury Engineering: REV. 0

REV.	DATE	BY	APPR.	NO.	FIRM
Request for Quotation	3/7/2017	EMG	DLS	A	SI
Issue for Construction	5/3/2017	EMG	DLS	0	SI

Design Cases	Cold Flare Riser (Case #1)	Cold Flare Riser (Case #2)	Warm Flare Riser (Case #1)	Warm Flare Riser (Case #2)
Flow Rate (Lb/Hr)	392,000	267,780	221,526	355,000
Relief Scenario	JT-Valve Failure	Fire - NGL Surge Tank	Refrigeration Comp. Blocked Flow	Condensate Surge Tank & Stabilizer PSVs
Controlling Point Sources	PSV-501	PSV-404	PSV-161,162,163	PSV-1301 and Others
Molecular Weight	17.6446	38.602	44.17	50.46
Temperature at Inlet Nozzle, ºF	-127	170	140 -190	255
Pressure at Inlet Nozzle, PSIG	25	15	10	25
Smokeless Operation Required (Yes/No)	Yes	Yes, Note 3	Yes, Note 3	
Lower Heating Value, BTU/SCF	979	2039	2318	2553
Composition (Mol %)				
Nitrogen	0.656%	0.000%		0.023%
Carbon Dioxide	0.021%	0.077%		2.9830%
Methane	89.660%	0.497%		10.210%
Ethane	8.589%	57.194%	0.25%	15.643%
Propane	0.995%	27.995%	99.00%	25.187%
i-Butane	0.031%	3.312%	0.75%	6.070%
n-Butane	0.043%	7.146%		17.287%
i-Pentane	0.002%	1.423%		6.200%
n-Pentane	0.001%	1.438%		7.288%
Hexane	0.000%	0.510%		5.938%
Heptane	0.000%	0.142%		2.254%
Benzene	0.000%	0.038%		0.425%
Toluene	0.000%	0.009%		0.193%
O-Xylene	0.000%	0.001%		0.037%
P-Xylene	0.000%	0.000%		0.000%
Octanes+	0.000%	0.008%		0.2522%
Water	0.000%	0.000%		0.000%
Hydrogren Sulfide	0.000045%	0.00032%		0.0098%
Flare Riser Diameter & Inlet Nozzle Size, Note 2	By Vendor		By Vendor	
Radiation Design Parameters: Temp, F / Wind, MPH	90 / 30		90 / 30	

Notes
1) Elevated, self-supported flare.
2) Vendor to propose optimum size of two risers
3) Smokeless rate is 20% of the warm flare design rate.
4) Flare shall be of one-piece lift/erection design for site installation.
5) Instrument air available at 85 to 125 psig.
6) Provide radiation shielding for any JB's, panels, boxes, or other electrical equipment if required to prevent operating temperature out of spec during extended release.
7) Supply heavy duty vaneaxial blower for air assist with VFD control.
8) Pressure at flare base for majority of other cases will be 5 psig or less.

FLARE

BY:	EMG	JOB NO:	10231	PAGE	2	OF 2
DATE:	3/7/2017	ITEM NO.:	FL-5100 FLARE			
CUSTOMER:	Lucid Energy					
PLANT:	Roadrunner					
SERVICE:	Flare					
QUANTITY:	1	SIZE:	*			

SAULSBURY INDUSTRIES

Texas Registered Engineering Firm F-518

Work by Saulsbury Engineering: REV. 0

Power Available	460Vac 3 P 60 Hz		
Control Power	120 Vac 1 P 60 Hz		
Electric Classification Area	Class 1, Div 2, Grp C,D, Temp T2B		
Pilot Gas	Pipeline gas, 100 psia		
Utility Gas	Pipeline Gas, 100 psia		
Purge Reduction	Pipeline Gas, 100 psia		
Flare Tip	By Vendor		
Maximum Allowable Thermal Radiation, BTU/Hr/SqFt	1750 - Note 6		
At Grade, Specify Distance from Flare Base, Ft	100		
Stack Support	Self Supported		
Structural Design Wind Velocity, MPH	120		
Seismic Zone	1		
Flare Knockout Drum	Supplied by Others		
Design Pressure, PSIG / Temperature, F / MDMT, F	50 / 350 / -150		
ASME Code Stamp / National Board Registration	No		
Ignition Device	HEI		
Enclosure	Class 1 Div 2, Grp C,D, T2B		
Ladder Platforms	No		
Special Instrumentation	Air Assist Flow switch		

Notes:
1) Applicable specifications: NEC NEMA AISC
2) Specifications: Piping - ASME B31.3; Welding - AWS 1.1; Structural - ASCE 7-05 / ASME STS-1-2011
3) Use pressure transmitters for all pressure instrumentation.
4) Ignition system: Manual with automatic re-light; provide temperature or optical pilot monitoring
5) Ignition device: HEI - high energy spark ignition; FFG - flame front generator
6) General documentation to include general arrangement drawings, detail flare stack drawings, ASME STS-1-2011 analysis and required foundation loads.
7) Preferred base design is a base plate, top plate and intermediate gussets.

Process Conditions -- English Units

Client:	Saulsbury	Zeeco Ref.: 2017-01312FL-01		Date:	16-Mar-17
Location:	Loving, NM	Client Ref.: 0		Rev.	0

	Mol %					
	Cold Case 1	Cold Case 2	Warm Case 1	Warm Case 2	Case K	Case L
METHANE	89.66	0.50		10.21		
ETHANE	8.59	57.19	0.25	15.64		
PROPANE	1.00	28.00	99.00	25.19		
BUTANE	0.07	10.46	0.75	25.36		
PENTANE	0.00	2.86		13.49		
HEXANE		0.51		5.94		
HEPTANE		0.14		2.25		
OCTANE		0.01		0.25		
NONANE						
DECANE						
DODECANE						
TRIDECANE						
CYCLOPENTANE						
ETHYLENE						
PROPYLENE						
BUTYLENE						
ACETYLENE						
BENZENE		0.04		0.43		
TOLUENE		0.01		0.19		
XYLENE		0.00		0.04		
CARBON MONOXIDE						
CARBON DIOXIDE	0.02	0.08		0.98		
HYDROGEN SULFIDE				0.01		
SULFUR DIOXIDE						
AMMONIA						
AIR						
HYDROGEN						
OXYGEN						
NITROGEN	0.66			0.02		
WATER						
BUTADIENE						
METHANOL						
Total	**100**	**100**	**100**	**100**		
Mol. Wt.	17.64	38.43	44.17	50.57		
L. H. V. (BTU/SCF):	979	2,030	2,319	2,606		
Temperature (Deg. F):	-127.0	170.0	190.0	255.0		
Avail. Static Pressure (psig):	25.00	15.00	10.00	25.00		
Flow Rate (lbs/hr):	392,000	267,780	221,526	355,000		
Smokeless Rate (lbs/hr):				71,000		

Confidential and Proprietary

Appendix B: Warm and Cold Flare Relieving Scenario Summary Sheets

SAULSBURY INDUSTRIES
2951 EAST INTERSTATE 20, ODESSA, TX 79766
TEXAS REGISTERED ENGINEERING FIRM F-518

FLARE STUDY

JOB NO.:	10231	REVISION:	1
CLIENT:	LUCID ENERGY GROUP	DATE:	8/30/2017
PROJECT:	ROADRUNNER GAS PLANT		
LOCATION:	EDDY COUNTY, NM	BY:	EMG/APL

COLD FLARE RELIEVING SCENARIOS SUMMARY

FIRE: NGL Product Surge Tank

PSV	PSV Type	Equipment	Set Pressure (psig)	Size	Required Rate (lb/hr)	PSV Capacity (lb/hr)	Required Orifice (in^2)	Installed Orifice (in^2)	Inlet Piping DP (psi)	Back Pressure Limit (psig)	Back Pressure at PSV (psig)	Back Pressure at Header (psig)	Back Pressure at KO Drum (psig)	Back Pressure at Flare Base (psig)
PSV-404	Pilot	V-404 NGL Product Surge Tank	400	4" P 6"	268,265	301,251	6.360	6.380	1	200**	89	46	32	8.5

FIRE: UOP Process Area

PSV	PSV Type	Equipment	Set Pressure (psig)	Size	Required Rate (lb/hr)	PSV Capacity (lb/hr)	Required Orifice (in^2)	Installed Orifice (in^2)	Inlet Piping DP (psi)	Back Pressure Limit (psig)	Back Pressure at PSV (psig)	Back Pressure at Header (psig)	Back Pressure at KO Drum (psig)	Back Pressure at Flare Base (psig)
PSV-202A	Pilot	E-202 Gas/Product Exchanger	1100	2" J 3"	10,000	189,012	0.145	1.287	0.005	200**	36	34	20	5
PSV-202B	Balanced	E-202 Gas/Product Exchanger	1440	1" D 1"	4,888	32,780	0.034	0.110	0.751	200**	35	34	20	5
PSV-206	Pilot	E-206 Reflux Condenser	1100	1" F 2"	28,804	31,852	0.296	0.307	5.589	200**	100	30	20	5
PSV-203	Pilot	E-203 Chiller	270	4" N 6"	83,326	157,460	2.153	4.340	0.016	200**	40	34	20	5
PSV-402	Pilot	V-402 Cold Separator	1100	2" J 3"	85,704	156,018	0.947	1.287	1.208	200**	120	32	20	5

**Note: Backpressure limit set by design pressure of PSV discharge piping lateral

OPER: PCV-402B (JT-Valve) Control Valve Failure

PSV	PSV Type	Equipment	Set Pressure (psig)	Size	Required Rate (lb/hr)	PSV Capacity (lb/hr)	Required Orifice (in^2)	Installed Orifice (in^2)	Inlet Piping DP (psi)	Back Pressure Limit (psig)	Back Pressure at PSV (psig)	Back Pressure at Header (psig)	Back Pressure at KO Drum (psig)	Back Pressure at Flare Base (psig)
PSV-501	Pilot	T-501 Demethanizer	400	6" Q 8"	327,800	349,749	11.500	12.270	0.23	200**	29	20	8	2

**Note: Backpressure limit set by design pressure of PSV discharge piping lateral

OPER: E-203 Tube Rupture

PSV	PSV Type	Equipment	Set Pressure (psig)	Size	Required Rate (lb/hr)	PSV Capacity (lb/hr)	Required Orifice (in^2)	Installed Orifice (in^2)	Inlet Piping DP (psi)	Back Pressure Limit (psig)	Back Pressure at PSV (psig)	Back Pressure at Header (psig)	Back Pressure at KO Drum (psig)	Back Pressure at Flare Base (psig)
PSV-203	Pilot	E-203 Chiller	270	4" N 6"	88,033	89,267	4.280	4.340	0.047	200**	31	9	5	0.6

**Note: Backpressure limit set by design pressure of PSV discharge piping lateral

OPER: E-202 Tube Rupture

PSV	PSV Type	Equipment	Set Pressure (psig)	Size	Required Rate (lb/hr)	PSV Capacity (lb/hr)	Required Orifice (in^2)	Installed Orifice (in^2)	Inlet Piping DP (psi)	Back Pressure Limit (psig)	Back Pressure at PSV (psig)	Back Pressure at Header (psig)	Back Pressure at KO Drum (psig)	Back Pressure at Flare Base (psig)
PSV-202A	Pilot	E-202 Gas/Product Exchanger	1100	2" J 3"	87,224	91,044	1.233	1.287	0.574	200**	108	38	1	0.3

**Note: Backpressure limit set by design pressure of PSV discharge piping lateral

SAULSBURY INDUSTRIES
2951 EAST INTERSTATE 20, ODESSA, TX 79766
TEXAS REGISTERED ENGINEERING FIRM F-518

FLARE STUDY

JOB NO.: 10231 REVISION: 1
CLIENT: LUCID ENERGY GROUP DATE:
PROJECT: ROAD RUNNER 200MMSCD CRYO
LOCATION: EDDY COUNTY, NM BY: APL/EMG

WARM FLARE RELIEVING SCENARIOS SUMMARY - FIRE CASES

FIRE: Refrigeration Area

PSV	PSV Type	Equipment	Set Pressure (psig)	Size	Required Rate (lb/hr)	PSV Capacity (lb/hr)	Required Orifice (in^2)	Installed Orifice (in^2)	Inlet Piping DP (psi)	Back Pressure Limit (psig)	Back Pressure at PSV (psig)	Back Pressure at Header (psig)	Back Pressure at KO Drum (psig)	Back Pressure at Flare Base (psig)
PSV-462	Pilot	V-462 Refrigerant Economizer	270	1.5" F 2"	6,313	10,486	0.185	0.307	4.175	200**	10	6	4	0.7
PSV-463	Pilot	V-463 Refrigerant Accumulator	325	3" K 4"	44,846	65,617	1.256	1.838	1.728	200**	43	7	4	0.7

**Note: Backpressure limit set by design pressure of PSV discharge piping lateral

FIRE: Mole-Sieve Area

PSV	PSV Type	Equipment	Set Pressure (psig)	Size	Required Rate (lb/hr)	PSV Capacity (lb/hr)	Required Orifice (in^2)	Installed Orifice (in^2)	Inlet Piping DP (psi)	Back Pressure Limit (psig)	Back Pressure at PSV (psig)	Back Pressure at Header (psig)	Back Pressure at KO Drum (psig)	Back Pressure at Flare Base (psig)
PSV-441	Conv.	F-441 Inlet Filter Coalescer	1100	1" D 1"	8,628	8,768	0.123	0.125	10.267	231	262	157	13	2.9
PSV-442	Balanced	V-442 Mole Sieve Dehydrator	1095	1.5" G 3"	23,891	29,672	0.405	0.503	4.975	200**	36	29	13	2.9
PSV-443	Balanced	V-443 Mole Sieve Dehydrator	1095	1.5" G 3"	23,891	29,672	0.405	0.503	4.975	200**	37	29	13	2.9
PSV-444	Balanced	V-444 Mole Sieve Dehydrator	1095	1.5" G 3"	23,891	29,672	0.405	0.503	4.975	200**	36	28	13	2.9
PSV-445	Conv.	F-445 Mole Sieve Dust Filter	1100	1" D 1"	3,638	7,656	0.059	0.125	0.255	231	182	168	13	2.9
PSV-446	Conv.	F-446 Mole Sieve Dust Filter	1100	1" D 1"	3,638	7,656	0.059	0.125	0.255	231	183	166	13	2.9
PSV-447	Pilot	V-447 Regen Gas Scrubber	1100	2" J 3"	2,079	84,749	0.032	1.287	10.273	260	43	40	13	2.9

**Note: Backpressure limit set by design pressure of PSV discharge piping lateral

FIRE: Amine HMO Heater

PSV	PSV Type	Equipment	Set Pressure (psig)	Size	Required Rate (lb/hr)	PSV Capacity (lb/hr)	Required Orifice (in^2)	Installed Orifice (in^2)	Inlet Piping DP (psi)	Back Pressure Limit (psig)	Back Pressure at PSV (psig)	Back Pressure at Header (psig)	Back Pressure at KO Drum (psig)	Back Pressure at Flare Base (psig)
PSV-0801	Balanced	V-0801 Hot Oil Expansion Tank	150	4" M 6"	109,693	133,496	2.958	3.6	0.039	68	11	7	3	0.6

FIRE: Cryo HMO Heater

PSV	PSV Type	Equipment	Set Pressure (psig)	Size	Required Rate (lb/hr)	PSV Capacity (lb/hr)	Required Orifice (in^2)	Installed Orifice (in^2)	Inlet Piping DP (psi)	Back Pressure Limit (psig)	Back Pressure at PSV (psig)	Back Pressure at Header (psig)	Back Pressure at KO Drum (psig)	Back Pressure at Flare Base (psig)
PSV-781	Pilot	H-781 HMO Expansion Tank	150	1.5" H 3"	29,658	39,398	0.591	0.785	3.069	150	39	38	1	0.2

FIRE: Inlet High Pressure Area

PSV	PSV Type	Equipment	Set Pressure (psig)	Size	Required Rate (lb/hr)	PSV Capacity (lb/hr)	Required Orifice (in^2)	Installed Orifice (in^2)	Inlet Piping DP (psi)	Back Pressure Limit (psig)	Back Pressure at PSV (psig)	Back Pressure at Header (psig)	Back Pressure at KO Drum (psig)	Back Pressure at Flare Base (psig)
PSV-1225	Pilot	F-1225 Inlet Filter Coalescer	1100	1" E 2"	21,620	21,645	0.140	0.196	0.318	200**	48	3	1	0.1

**Note: Backpressure limit set by design pressure of PSV discharge piping lateral

SAULSBURY INDUSTRIES
2951 EAST INTERSTATE 20, ODESSA, TX 79766
TEXAS REGISTERED ENGINEERING FIRM F-518

FLARE STUDY

JOB NO.: 10231 REVISION: 1
CLIENT: LUCID ENERGY GROUP DATE:
PROJECT: ROAD RUNNER 200MMSCD CRYO
LOCATION: EDDY COUNTY, NM BY: APL/EMG

WARM FLARE RELIEVING SCENARIOS SUMMARY - FIRE CASES

FIRE: TEG Treating High Pressure Area

PSV	PSV Type	Equipment	Set Pressure (psig)	Size	Required Rate (lb/hr)	PSV Capacity (lb/hr)	Required Orifice (in^2)	Installed Orifice (in^2)	Inlet Piping DP (psi)	Back Pressure Limit (psig)	Back Pressure at PSV (psig)	Back Pressure at Header (psig)	Back Pressure at KO Drum (psig)	Back Pressure at Flare Base (psig)
PSV-1275	Pilot	F-1275 TEG Filter Coalescer	1100	1" E 2"	12,771	14,034	0.161	0.196	0.464	200**	6	3	1	0.08

**Note: Backpressure limit set by design pressure of PSV discharge piping lateral

FIRE: Condensate Surge Tank

PSV	PSV Type	Equipment	Set Pressure (psig)	Size	Required Rate (lb/hr)	PSV Capacity (lb/hr)	Required Orifice (in^2)	Installed Orifice (in^2)	Inlet Piping DP (psi)	Back Pressure Limit (psig)	Back Pressure at PSV (psig)	Back Pressure at Header (psig)	Back Pressure at KO Drum (psig)	Back Pressure at Flare Base (psig)
PSV-9060	Pilot	V-9060 Condensate Surge Tank	325	6" R 8"	364,824	291,076	12.0137	16.000	0.26365	200**	181	183	86	84
PSV-1403	Pilot	V-1403 Off-Spec Condensate Drum	325	2" J 3"	53,194	64,296	1.152	1.287	0.3582	200**	176	183	86	84
PSV-1001A	Pilot	F-1001A Condensate Filter	1100	1" D 2"	11,223	19,219	0.051	0.110	0.12693	200**	184	183	86	84
PSV-1001B	Pilot	F-1001B Condensate Filter	1100	1" D 2"	11,223	19,219	0.051	0.110	0.12693	200**	184	183	86	84
PSV-9501	Pilot	F-9500 Flash Gas Filter Coalescer	1200	1 1/2" F 2"	21,450	33,568	0.2002	0.307	0.792	200**	186	183	86	84

**Note: Backpressure limit set by design pressure of PSV discharge piping lateral

461,914

FIRE: Stabilizer Area

PSV	PSV Type	Equipment	Set Pressure (psig)	Size	Required Rate (lb/hr)	PSV Capacity (lb/hr)	Required Orifice (in^2)	Installed Orifice (in^2)	Inlet Piping DP (psi)	Back Pressure Limit (psig)	Back Pressure at PSV (psig)	Back Pressure at Header (psig)	Back Pressure at KO Drum (psig)	Back Pressure at Flare Base (psig)
PSV-3101	Balanced	F-3101 Filter	325	1" D 2"	5,430	7,905	0.045	0.110	3.587	100	84	78	38	30
PSV-3102	Balanced	F-3102 Filter	325	1" D 2"	5,430	7,905	0.045	0.110	3.528	100	84	78	38	30
PSV-3202	Balanced	T-3202 Deethanizer Tower	325	3" J 4"	27,268	31,730	0.942	1.287	2.180	100	81	78	38	30
PSV-3201A	Balanced	E-3201 Feed/Bottoms Exchanger	325	1 1/2" F 2"	28,345	22,061	0.285	0.307	2.557	100	97	78	38	30
PSV-3201B	Balanced	E-3201 Feed/Bottoms Exchanger	325	1 1/2" F 2"	28,345	14,471	0.218	0.307	3.257	100	85	78	38	30
PSV-3301	Pilot	T-3301 Stabilizer Tower	325	4" L 6"	90,664	58,064	2.612	2.853	0.883	100	78	81	38	30
PSV-3702	Balanced	Stabilizer Feed Separator	325	3" J 4"	36,333	38,586	1.231	1.287	0.699	100	85	78	38	30

**Note: Backpressure limit set by design pressure of PSV discharge piping lateral

FIRE: Stabilizer HMO Expansion Tank

PSV	PSV Type	Equipment	Set Pressure (psig)	Size	Required Rate (lb/hr)	PSV Capacity (lb/hr)	Required Orifice (in^2)	Installed Orifice (in^2)	Inlet Piping DP (psi)	Back Pressure Limit (psig)	Back Pressure at PSV (psig)	Back Pressure at Header (psig)	Back Pressure at KO Drum (psig)	Back Pressure at Flare Base (psig)
PSV-3501	Balanced	V-3501 Hot Oil Expansion Tank	150	2" H 3"	15,617	52,715	0.563	0.785	0.839	100	0.304	-1.316	0.5	0.1

**Note: Backpressure limit set by design pressure of PSV discharge piping lateral

FIRE: LPG Surge Tank

SAULSBURY INDUSTRIES
2951 EAST INTERSTATE 20, ODESSA, TX 79766
TEXAS REGISTERED ENGINEERING FIRM F-518

FLARE STUDY

JOB NO.: 10231 REVISION: 1
CLIENT: LUCID ENERGY GROUP DATE:
PROJECT: ROAD RUNNER 200MMSCD CRYO
LOCATION: EDDY COUNTY, NM BY: APL/EMG

WARM FLARE RELIEVING SCENARIOS SUMMARY - FIRE CASES

PSV	PSV Type	Equipment	Set Pressure (psig)	Size	Required Rate (lb/hr)	PSV Capacity (lb/hr)	Required Orifice (in^2)	Installed Orifice (in^2)	Inlet Piping DP (psi)	Back Pressure Limit (psig)	Back Pressure at PSV (psig)	Back Pressure at Header (psig)	Back Pressure at KO Drum (psig)	Back Pressure at Flare Base (psig)
PSV-3801	Pilot	V-3801 LPG Surge Tank	325	4" L 6"	88,783	105,217	2.39	2.853	1.461	100	17	18.2074	6.844	5.31

**Note: Backpressure limit set by design pressure of PSV discharge piping lateral

FIRE: Flash Gas Compressors

PSV	PSV Type	Equipment	Set Pressure (psig)	Size	Required Rate (lb/hr)	PSV Capacity (lb/hr)	Required Orifice (in^2)	Installed Orifice (in^2)	Inlet Piping DP (psi)	Back Pressure Limit (psig)	Back Pressure at PSV (psig)	Back Pressure at Header (psig)	Back Pressure at KO Drum (psig)	Back Pressure at Flare Base (psig)
PSV-9300	Pilot	C-9300 Flash Gas Compressor	400	1 1/2" H 3"	22,325	20,808	0.5744	0.785	0.323	100	36	8.9	2.47	2
PSV-9400	Pilot	C-9400 Flash Gas Compressor	400	1 1/2" H 3"	22,325	20,690	0.5744	0.785	0.326	100	42	8.9	2.47	2

**Note: Backpressure limit set by design pressure of PSV discharge piping lateral

SAULSBURY INDUSTRIES
2951 EAST INTERSTATE 20, ODESSA, TX 79766
TEXAS REGISTERED ENGINEERING FIRM F-518

FLARE STUDY

JOB NO.:	10231	REVISION:	0
CLIENT:	LUCID ENERGY GROUP	DATE:	
PROJECT:	ROAD RUNNER 200MMSCD CRYO		
LOCATION:	EDDY COUNTY, NM	BY:	APL/EMG

WARM FLARE RELIEVING SCENARIOS SUMMARY - OPERATING CASES

OPER: E-207 Tube Rupture

PSV	PSV Type	Equipment	Set Pressure (psig)	Size	Required Rate (lb/hr)	PSV Capacity (lb/hr)	Required Orifice (in^2)	Installed Orifice (in^2)	Inlet Piping DP (psi)	Back Pressure Limit (psig)	Back Pressure at PSV (psig)	Back Pressure at Header (psig)	Back Pressure at KO Drum (psig)	Back Pressure at Flare Base (psig)
PSV-207	Pilot	E-207 Trim Reboiler	150	4" P 6"	68,964	70,966	6.200	6.380	1.050	120	31	10	7	1.4

OPER: Refrigeration Compressor Blocked Flow

PSV	PSV Type	Equipment	Set Pressure (psig)	Size	Required Rate (lb/hr)	PSV Capacity (lb/hr)	Required Orifice (in^2)	Installed Orifice (in^2)	Inlet Piping DP (psi)	Back Pressure Limit (psig)	Back Pressure at PSV (psig)	Back Pressure at Header (psig)	Back Pressure at KO Drum (psig)	Back Pressure at Flare Base (psig)
PSV-161	Pilot	C-161 Refrigerant Compressor	325	3" L 4"	73,842	79,506	2.552	2.853	1.779	200**	79	58	39	13
PSV-162	Pilot	C-162 Refrigerant Compressor	325	3" L 4"	73,842	79,506	2.552	2.853	1.913	200**	80	60	39	13
PSV-163	Pilot	C-163 Refrigerant Compressor	325	3" L 4"	73,842	79,506	2.552	2.853	2.086	200**	75	61	39	13

**Note: Backpressure limit set by design pressure of PSV discharge piping lateral

OPER: LV-1201/1202 Control Valve Failure**

PSV	PSV Type	Equipment	Set Pressure (psig)	Size	Required Rate (lb/hr)	PSV Capacity (lb/hr)	Required Orifice (in^2)	Installed Orifice (in^2)	Inlet Piping DP (psi)	Back Pressure Limit (psig)	Back Pressure at PSV (psig)	Back Pressure at Header (psig)	Back Pressure at KO Drum (psig)	Back Pressure at Flare Base (psig)
PSV-0101	Pilot	V-0101 Amine Flash Tank	150	FB, 6" x 8"	210,253	268,644	16.099	20.570	0.432	120	91	70	48	18

**Note: The sizing scenario only considers one of the Amine Contactor Level Control Valves (LV-1201 OR LV-1202) to fail open, allowing gas blow-by. Accounting for failure of both valves would be considered a double jeopardy scenario and therefore invalid.

OPER: LV-2701 Control Valve Failure

PSV	PSV Type	Equipment	Set Pressure (psig)	Size	Required Rate (lb/hr)	PSV Capacity (lb/hr)	Required Orifice (in^2)	Installed Orifice (in^2)	Inlet Piping DP (psi)	Back Pressure Limit (psig)	Back Pressure at PSV (psig)	Back Pressure at Header (psig)	Back Pressure at KO Drum (psig)	Back Pressure at Flare Base (psig)
PSV-2101	Pilot	V-2101 Glycol Flash Separator	150	3" J 4"	9,675	14,781	0.936	1.287	0.108	120	2.5	0.8	0.3	0.1

OPER: Regen Gas Heater Thermal

PSV	PSV Type	Equipment	Set Pressure (psig)	Size	Required Rate (lb/hr)	PSV Capacity (lb/hr)	Required Orifice (in^2)	Installed Orifice (in^2)	Inlet Piping DP (psi)	Back Pressure Limit (psig)	Back Pressure at PSV (psig)	Back Pressure at Header (psig)	Back Pressure at KO Drum (psig)	Back Pressure at Flare Base (psig)
PSV-741	Conv.	H-741 Regen Gas Heater	1095	1" D 1"	6,000	6,637	0.113	0.125	5.321	110	112	6.8	0.1	0.1

OPER: PV-481 Control Valve Failure (Fuel Gas Scrubber Overpressure)

PSV	PSV Type	Equipment	Set Pressure (psig)	Size	Required Rate (lb/hr)	PSV Capacity (lb/hr)	Required Orifice (in^2)	Installed Orifice (in^2)	Inlet Piping DP (psi)	Back Pressure Limit (psig)	Back Pressure at PSV (psig)	Back Pressure at Header (psig)	Back Pressure at KO Drum (psig)	Back Pressure at Flare Base (psig)
PSV-481	Balanced	V-481 Fuel Gas Scrubber	265	1.5" D 3"	1,062	2,081	0.056	0.110	0.159	132	1	0.1	0.1	0.1

SAULSBURY INDUSTRIES
2951 EAST INTERSTATE 20, ODESSA, TX 79766
TEXAS REGISTERED ENGINEERING FIRM F-518

FLARE STUDY

JOB NO.:	10231	REVISION:	0
CLIENT:	LUCID ENERGY GROUP	DATE:	
PROJECT:	ROAD RUNNER 200MMSCD CRYO		
LOCATION:	EDDY COUNTY, NM	BY:	APL/EMG

WARM FLARE RELIEVING SCENARIOS SUMMARY - OPERATING CASES

OPER: A-361 Bay Shutdown

PSV	PSV Type	Equipment	Set Pressure (psig)	Size	Required Rate (lb/hr)	PSV Capacity (lb/hr)	Required Orifice (in^2)	Installed Orifice (in^2)	Inlet Piping DP (psi)	Back Pressure Limit (psig)	Back Pressure at PSV (psig)	Back Pressure at Header (psig)	Back Pressure at KO Drum (psig)	Back Pressure at Flare Base (psig)
1" Gate Valves	N/A	A-361 Refrigerant Condenser	230	1" GV	355	N/A	N/A	N/A	1.459	210	114	0.1	0.1	0.1

OPER: V-9060 OH Blocked

PSV	PSV Type	Equipment	Set Pressure (psig)	Size	Required Rate (lb/hr)	PSV Capacity (lb/hr)	Required Orifice (in^2)	Installed Orifice (in^2)	Inlet Piping DP (psi)	Back Pressure Limit (psig)	Back Pressure at PSV (psig)	Back Pressure at Header (psig)	Back Pressure at KO Drum (psig)	Back Pressure at Flare Base (psig)
PV-9060B	N/A	V-9060 Condensate Surge Tank	275	3" bv	355	N/A	N/A	N/A	0.018	210	114	0.1	0.1	0.1

OPER: Flash Gas Compressors Blocked Flow (Control Failure)

PSV	PSV Type	Equipment	Set Pressure (psig)	Size	Required Rate (lb/hr)	PSV Capacity (lb/hr)	Required Orifice (in^2)	Installed Orifice (in^2)	Inlet Piping DP (psi)	Back Pressure Limit (psig)	Back Pressure at PSV (psig)	Back Pressure at Header (psig)	Back Pressure at KO Drum (psig)	Back Pressure at Flare Base (psig)
PSV-9301	Pilot	Flash Gas Compressors Header	400	3" K 4"	54,205	31,353	1.546	1.828	0.052	320	51	39.2	15.7	4.5

Appendix C: Warm and Cold Flare Knockout Drum Sizing Sheets

Separator Design	Flare KO Drum						
Unit	OPER: LV-1201 Control Failure						
Basis	Highest Individual Flow Plus			0%	Overdesign		
Flow Rates	Gas	110	mmscfd		Vessel ID	72	Inch
	Oil	1000	bpd		Vessel S/S	30.000	Ft
	Water	1000	bpd				
	Total Liq	2000	bpd				
Operating Pressure		48	psig				
Gas Compressibility		0.808					
Gas MW		23.0017					
Gas Temperature		90	F				
Bulk Liquid Retention		20	Minutes				
Surge Capacity (NLL to HLL)		0%	of Design Liquid Capacity including Overdesign				
Oil SpGr		1.024					
Liquid Volume (Percentage)		67%			Liquid Flow	58.3	GPM
Vessel Crossectional Area		28.274	SqFt		Bulk Liquid Volume	1166.7	Gallons
Available Crossectional Area		9.331	SqFt		Bulk Liquid Volume	156.0	CuFt
Gas Density		0.302	Lb/CuFt		Minimum Liquid Area	5.198	SqFt
Gas Flow		277798	Lb/Hr		Surge Area Required	0.000	SqFt
Gas ACFS		255.269	Ft3/Sec at TP				
Droplet Size	300	Micron					
	0.0009843	ft					
Gas Viscosity	0.0134	cP					
Drag Coefficient							
"X" Axis on Fig 5-19 GPSA	9.700						
From Chart, Drag Coef, C	2.00		**Figure 5-19 to determine droplet drag coefficient				
Drop Terminal Velocity	2.0998	ft/s	**Eq. 7-1 GPSA				
Distance for Droplet to Fall	23.76	Inches					
Time for Droplet to Fall	0.94	Seconds					
Gas Horizontal Velocity	9.03	ft/s					
Horiz. Distance for Gas Travel	28.00	ft	**Seam to seam length of vessel minus 2 feet				
Time for Gas to Travel	3.10	Seconds	**This number must be GREATER THAN "time for droplet to fall from mist eliminator" value so gas can fall into liquid phase before reaching the end of the vessel where gas outlet nozzle is located				

If the Horizontal Time Exceeds Vertical Time, Design is met or exceeded.

Separator Design	Cold Flare KO Drum					
Unit	OPER: PCV-402B JT-Valve Failure					
Basis	Highest Individual Flow Plus			0%	Overdesign	
Flow Rates	Gas	101.643	mmscfd		Vessel ID	54 Inch
	Oil	1616	bpd		Vessel S/S	30.000 Ft
	Water	0	bpd			
	Total Liq	1616	bpd			
Operating Pressure		32	psig			
Gas Compressibility		0.808				
Gas MW		18.16				
Gas Temperature		-88	F			
Bulk Liquid Retention		24.2	Minutes			
Surge Capacity (NLL to HLL)		0%	of Design Liquid Capacity including Overdesign			
Oil SpGr		0.537				
Liquid Volume (Percentage)		63%			Liquid Flow	47.1 GPM
Vessel Crossectional Area		15.904	SqFt		Bulk Liquid Volume	1140.6 Gallons
Available Crossectional Area		5.885	SqFt		Bulk Liquid Volume	152.5 CuFt
Gas Density		0.263	Lb/CuFt		Minimum Liquid Area	5.082 SqFt
Gas Flow		202661	Lb/Hr		Surge Area Required	0.000 SqFt
Gas ACFS		214.197	Ft3/Sec at TP			

Droplet Size	300	Micron	
	0.0009843	ft	
Gas Viscosity	0.012	cP	
Drag Coefficient			
"X" Axis on Fig 5-19 GPSA	5.497		
From Chart, Drag Coef, C	1.20		**Figure 5-19 to determine droplet drag coefficient
Drop Terminal Velocity	2.1020	ft/s	**Eq. 7-1 GPSA
Distance for Droplet to Fall	18	Inches	
Time for Droplet to Fall	0.71	Seconds	
Gas Horizontal Velocity	36.40	ft/s	
Horiz. Distance for Gas Travel	28.00	ft	**Seam to seam length of vessel minus 2 feet
Time for Gas to Travel	0.77	Seconds	**This number must be GREATER THAN "time for droplet to fall from mist eliminator" value so gas can fall into liquid phase before reaching the end of the vessel where gas outlet nozzle is located

If the Horizontal Time Exceeds Vertical Time, Design is met or exceeded.

Appendix D: Flare Radiation Isopleths

Zeeco Ref: SO 31927 Rev. 1
Flare Radiation Isopleths
Solar Radiation Included = 0 BTU/hr-ft2; Wind Speed = 30 ft/s; Rel. Humidity = 85%
Flare Tag No. = FL-5100 ; Operating Case = Cold Case 1

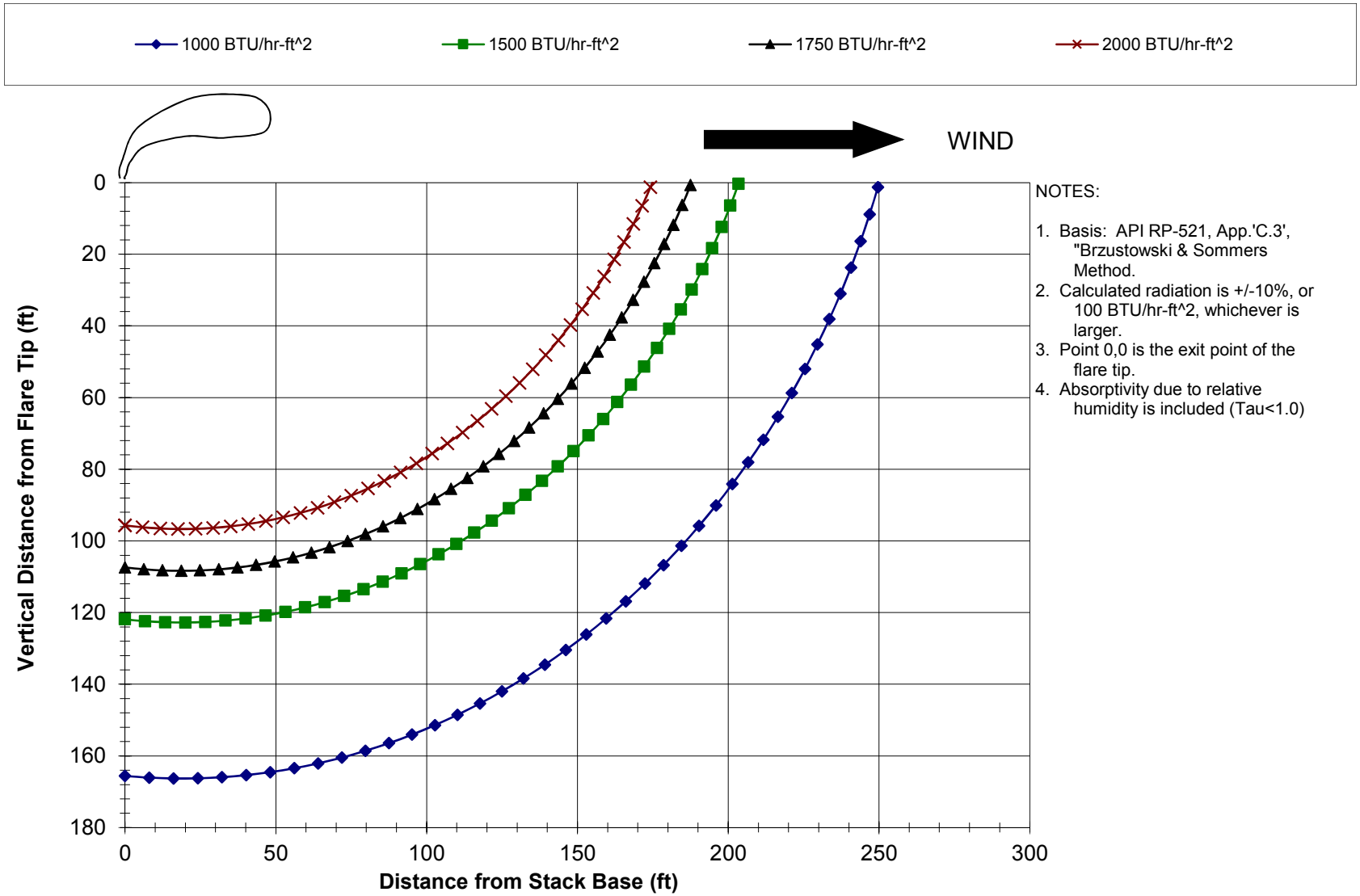

NOTES:

1. Basis: API RP-521, App.'C.3', "Brzustowski & Sommers Method.
2. Calculated radiation is +/-10%, or 100 BTU/hr-ft^2, whichever is larger.
3. Point 0,0 is the exit point of the flare tip.
4. Absorptivity due to relative humidity is included (Tau<1.0)

Confidential and Proprietary

Zeeco Ref: SO 31927 Rev. 1
Radiation At Grade Versus Distance From Stack Base
Stack Height = 100 ft ; Relative Humidity = 85%
Solar Radiation Included = 0 BTU/hr-ft^2 ; Wind Speed = 30 ft/s
Flare Tag No. = FL-5100 ; Operating Case = Cold Case 1

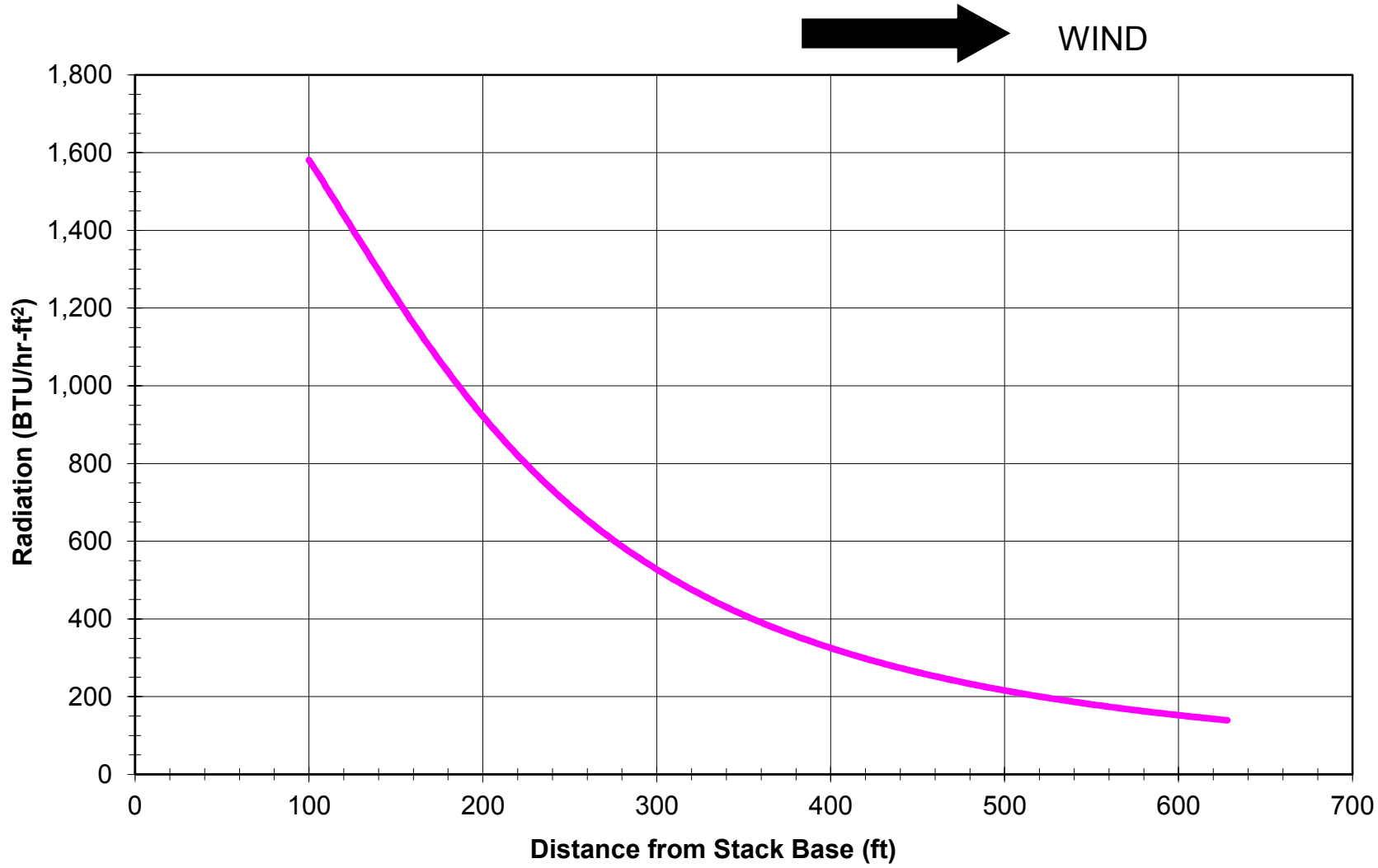

Confidential and Proprietary

Appendix E: Misc. Flare Information

Air Assisted Flare Tip Specification Sheet

Client:	Saulsbury	Zeeco Ref.:	2017-01312FL-01	Date:	16-Mar-17
Location:	Loving, NM	Client Ref.:	0	Rev.	0

General Information:

Tag No.:	FL-5100		
Model:	AFDSMJ-16-14/58	Type:	Air-Assisted
Length:	10'- 0 "		
Weight:	5000 lbs		
No. of Pilots:	3		

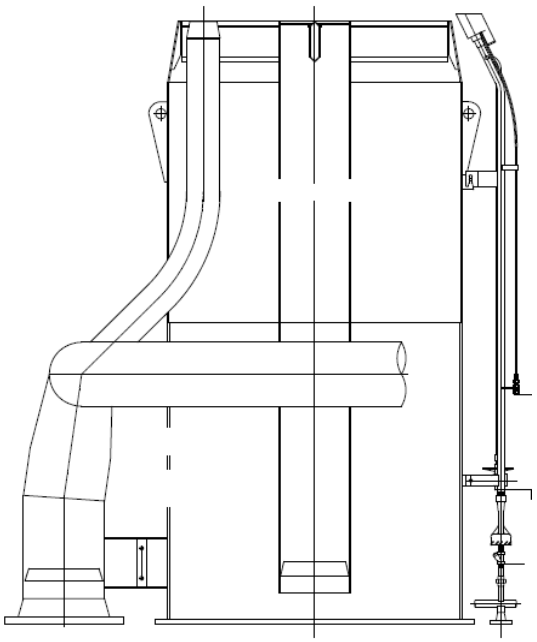

(Typical drawing only)

Design Case:

Governing Case:	Cold Case 1	
Molecular weight:	17.6	
L. H. V. :	979	BTU/SCF
Temperature:	-127	Deg. F
Available Static Pressure:	25.0	psig
Design Flow Rate:	392,000	lbs/hr
Governing Smokeless Case:	Warm Case 1	
Design Smokeless Rate:	0	lbs/hr
Approximate Exit Velocity:	1133	ft/s
Mach No.:	1.00	
Approx. Tip Press. Drop:	29.50	psig

Construction:

Upper Section:	310 SS	Windshield:	YES
Lower Section:	Carbon Steel	Flame retention Ring:	310 SS
		Lifting Lugs:	YES - C.S. Type

Surface Finish (Carbon Steel Surfaces):

Surface Preparation:	SSPC-SP6	Primer:	Inorganic Zinc
Paint (c. s. surfaces):	High Heat Aluminum		

Connections:

	Qty.	Size	Type	Material
N1 - Cold Gas Inlet:	1	16 "	150# RFWN	304 SS
N2 - Combustion Air Inlet:	1	58 "	Fab. Plate Flange	Carbon Steel
N3 - Warm Gas Inlet:	1	14 "	Beveled ; Weld	Carbon Steel
N4 - Pilot Gas Manifold:	1	1 "	150# RFSW	Carbon Steel

Miscellaneous Notes:

1. Includes Integral Purge Reducing Velocity Seal.
2. Warm Flare Required Fuel Gas Purge Rate = 290 SCFH.
3. Cold Flare Required Fuel Gas Purge Rate = 980 SCFH.

Note: Please refer to process conditions for all flare design conditions.

Confidential and Proprietary

Self-supported Flare Stack Specification Sheet

Client:	Saulsbury	Zeeco Ref.:	2017-01312FL-01	Date:	16-Mar-17
Location:	Loving, NM	Client Ref.:	0	Rev.:	0

General Information:

Tag No.:	FL-5100
Overall Height:	100'- 0 "

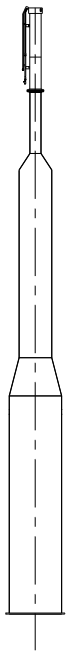

(Typical drawing only)

Design Criteria:

Wind Design Code:	ASCE 7-05	
Seismic Design Code:	UBC	
Importance Factor:	1.00	
Structural Design Code:	AISC	
Wind Speed (Structural):	120	mph
Seismic Zone:	1	
Warm Min/Max. Design Temp:	-20 / 350	Deg. F
Cold Min/Max. Design Temp:	-150 / 350	Deg. F
Design Pressure:	50	psig
Riser Corrosion Allow.:	0.063	in.

Construction:

Air Riser Diameter:	58"	Ladders & Step-offs:	None
Cold Riser Diameter:	16"	Platform at Tip:	None
Warm Riser Diameter:	14"	Additional Platforms:	None
Air / Warm Riser Material:	CS	ACWL:	None
Cold Riser Material:	304 SS		

Surface Finish (Carbon Steel Surfaces):

Surface Preparation:	SSPC-SP-6	Primer:	Inorganic Zinc
Int. Coat:	None	Finish Paint:	None

Utility Piping:

Per Attached Utility Piping Scope of Supply

Miscellaneous Notes:

1. Vane Axial blower mounted at base of stack
2. Blower Power Available: 460 V, 3 Ph, 60 Hz
3. Elevation considered for blower sizing: 3,051 feet. Ambient temp considered: 20 / 100 F
4. See GA attached for duplicate flare system.

Confidential and Proprietary

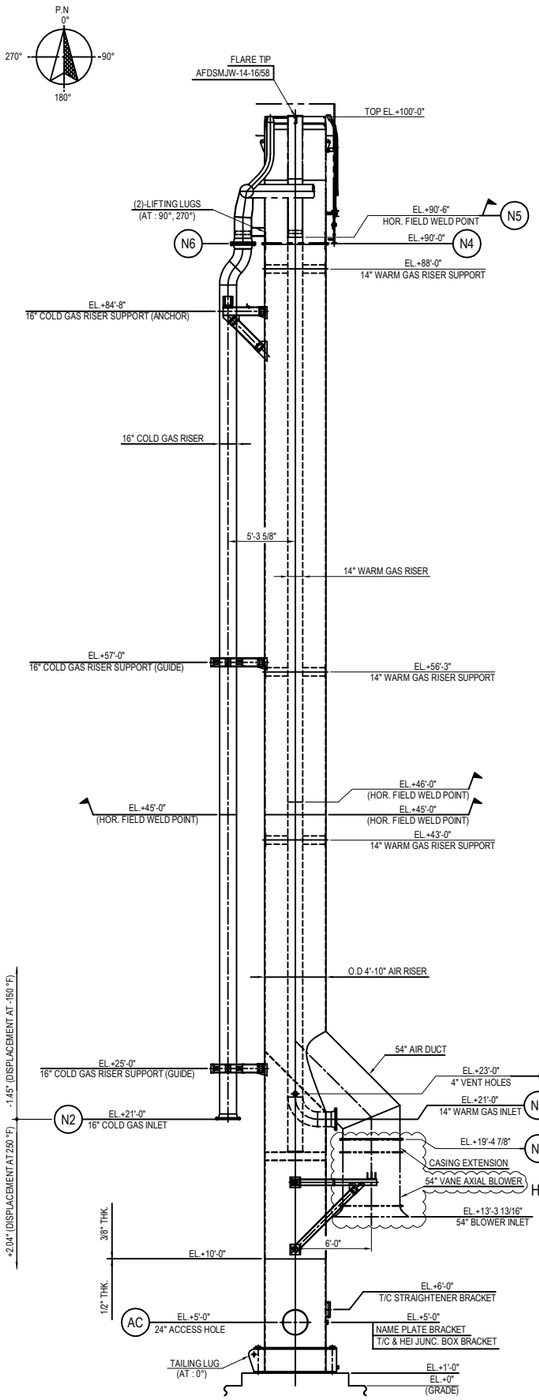

ELEVATION

("NOT TRUE ORIENTATION)

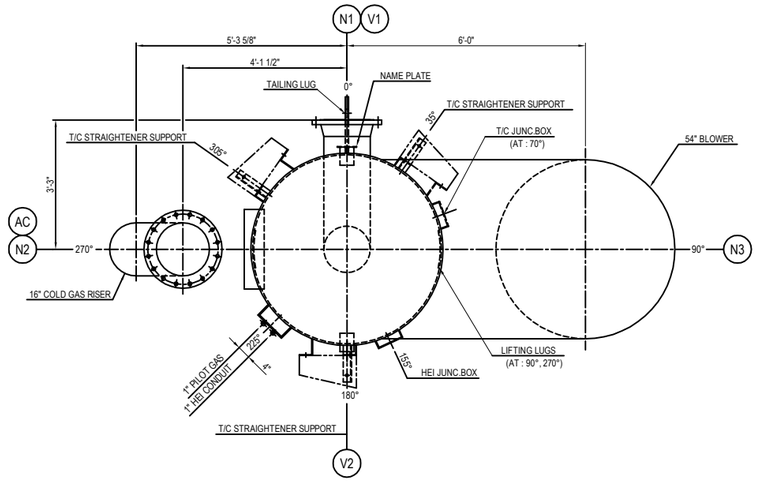

PLAN LAYOUT

TEMPERATURE	DISPLACEMENT
COLD (-150 °F)	1.45"
HOT (250 °F)	2.04"

NOZZLE THERMAL DISPLACEMENT

(FOR N2 NOZZLE)

PIPE SIZE (IN)	Fx	Fy	Fz	Mx	My	Mz
	lb	lb	lb	lb-ft	lb-ft	lb-ft
14	315	9	-687	2112.3	340.0	651.9
16	500	800	800	1140	850	850

MAX. ALLOWABLE INLET NOZZLE LOAD

(PER API 537)

HOLD

LOADING DATA	V(kip)	H(kip)	M(kip-ft)
DEAD LOAD	49.1	-	-
WIND LOAD	-	18.8	972.8
SEISMIC LOAD	-	4.4	323.0
NOZZLE LOAD	1.3	2.0	42.7

LOADING DATA

(FOR STACK RISER)

DETAIL OF UTILITY PIPING

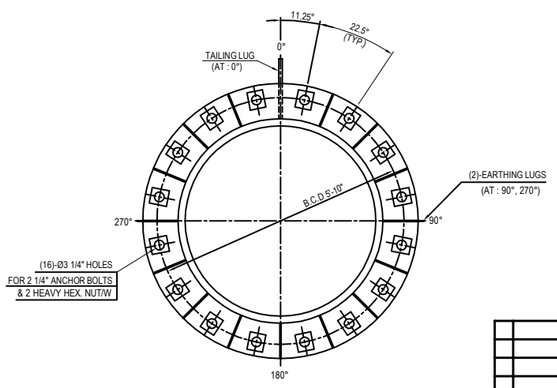

ANCHOR PLAN

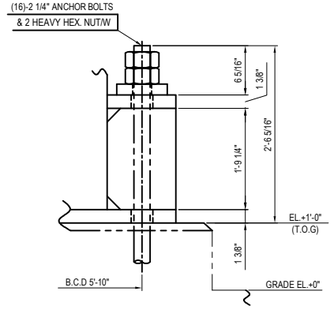

ANCHOR PROJECTION

MATERIAL SPECIFICATIONS	
WARM GAS RISER	A53-B ERW.
COLD GAS RISER	A312-TP304
AIR RISER	A36
FLARE TIP	SEE FLARE TIP DWG.
WARM GAS RISER FLANGE	A105
COLD GAS RISER FLANGE	A182-F304
AIR RISER FLANGE	A36
RISER GASKET	C4401
BASE PLATE	A36
EARTHING LUG	304 S.S
UTILITY LINE	A106-B
CONDUIT	C.S + GALV.
RETRACTABLE T/C TUBING	316L S.S
NAME PLATE	304 S.S
NAME PLATE BRACKET	A36
LIFTING LUG	A36
TAILING LUG	A36
STRAIGHTENER SUPPORT	A36
ANCHOR BOLT	A307-C
BOLT/NUT (C.S)	A193-B7 / A194-2H
BOLT/NUT (S.S)	A320-B8 / A194-8

DESIGN DATA			
TYPE		SELF SUPPORTED	
STRUCTURAL DESIGN CODE		ASME STS-1 / AISC	
WIND LOAD	CODE	ASCE 7-05	
	V	120	m
	EXP.	C	
	I.F	1.0	
SEISMIC LOAD	CODE	UBC-97	
	ZONE	1	
	SOIL TYPE	SD	
	I.F	1.25	
DESIGN PRESS.	WARM	50	psi
	COLD	50	psi
	AIR	ATM	
DESIGN TEMP.	WARM	-20 ~ 350	
	COLD	-150 ~ 350	
	AIR	AMB	
OPERATING PRESS.	WARM	10 ~ 20	psi
	COLD	15 ~ 25	psi
	AIR	ATM	
OPERATING TEMP.	WARM	140 ~ 300	
	COLD	-127 ~ 91	
	AIR	AMB	
NDE		AS PER ITP	
CORROSION ALLOWANCE	C.S	1/16	inch
	S.S	N/A	
PAINTING		SEE NOTE 2	

NOZZLE AND CONNECTIONS

MARK	Q'TY	SIZE	SCH.	RATING	FACING	FLG. MAT'L	MATERIAL NOZZLE	SERVICE
N1	1	14"	STD.	ASME 150#	RF, WN	A105	A53-B ERW	WARM GAS INLET
N2	1	16"	10S	ASME 150#	RF, WN	A182-F304	A312-TP304	COLD GAS INLET
N3	1	54"	3/8" THK.	3/4" THK. PLATE FL'G	FF	A36	A36	AIR INLET
N4	1	58"	3/8" THK.	3/4" THK. PLATE FL'G	FF	A36	A36	AIR OUTLET
N5	1	14"	STD.	PIPE END	B.W	-	A53-B ERW.	WARM GAS OUTL
N6	1	16"	10S	ASME 150#	RF, WN	A182-F304	A312-TP304	COLD GAS OUTLE
V1,2	2	4"	40	-	-	-	A53-B ERW.	VENT HOLE
AC	1	24"	3/8" THK.	-	-	-	A36	ACCESS HOLE
P	1	1"	STD.	ASME 150#	RF, SW	A105	A106-B	PILOT GAS

NOTE

1. FLANGE BOLTING TO STRADDLE CENTERLINES INDICATED BY CENTERLINE UNLESS NOTED OTHERWISE.
2. PANTING
   1) AIR RISER (EXTERNAL CARBON STEEL SURFACE)
      - SURFACE PREPARATION : SSPC-SP6
      - PRIMER : INORGANIC ZINC (DFT : 2-4 MILS)
      - FINISH : HIGH HEAT ALUMINUM (DFT : 1-1.5 MILS)
   2) AIR RISER SKIRT (INTERNAL CARBON STEEL SURFACE) - PRIMER ONLY
      - SURFACE PREPARATION : SSPC-SP6
      - PRIMER : INORGANIC ZINC (DFT : 2-4 MILS)
   3) WARM GAS RISER (EXTERNAL CARBON STEEL SURFACE) - PRIMER ONLY
      - SURFACE PREPARATION : SSPC-SP6
      - PRIMER : INORGANIC ZINC (DFT : 2-4 MILS)
   4) COLD GAS RISER : NO PAINT
   5) UTILITY (EXTERNAL CARBON STEEL SURFACE) - PRIMER ONLY
      - SURFACE PREPARATION : SSPC-SP6
      - PRIMER : INORGANIC ZINC (DFT : 2-4 MILS)
3. ALL PIPING 2" & SMALLER WILL BE SUPPLIED IN RANDOM LENGTH FOR FIELD ASSEMBLY.

REFERENCE DRAWING NO.	DESCRIPTION
SD-5776	AFDSMJW-14-16/58 TIP ASSEMBLY
SD-5783	RETRACTABLE T/C TUBING DETAIL
SD-5782	CONDUIT DETAIL
SD-5781	PIPING DETAIL
SD-5780	PIPING ARRANGEMENT
SD-5779	RISER DETAIL
SD-5778	TEMPLATE

NO	DATE	REVISION DESCRIPTION	BY	CKD	APP.

JOBSITE: LOVING, NM

END USER: SAULSBURY INDUSTRIES

S.O. NO.: 31927 | P.O. NO.: 10231-78352 | APP: AMZ

ZEECO, INC.
22151 EAST 91st STREET
BROKEN ARROW, OK 74014
PHONE: (918) 258-8551
FAX: (918) 251-5519
www.zeeco.com
sales@zeeco.com

PROPRIETARY DATA IS INCLUDED IN THE INFORMATION DISCLOSED HEREIN AND IS THE PROPERTY OF ZEECO,INC. THIS INFORMATION IS SUBMITTED IN CONFIDENCE AND MUST BE USED IN CONNECTION WITH WORK DONE FOR ZEECO, INC. AND ALL RIGHTS OF DESIGN OR INVENTION ARE RESERVED. UNAUTHORIZED DISCLOSURE OR USE IS PROHIBITED BY LAW.

SELF SUPPORTED FLARE STACK
GENERAL ARRANGEMENT
& LOADING DATA
(TAG: FL-5100)

FOR: LUCID ROAD RUNNER

DRAWN: NKC | DATE: 07JUN17
CHK: KJL | APP: CJ
SCALE: NONE | REV: 0

DRAWING NUMBER: SD-5777
SHT. 1 OF 1

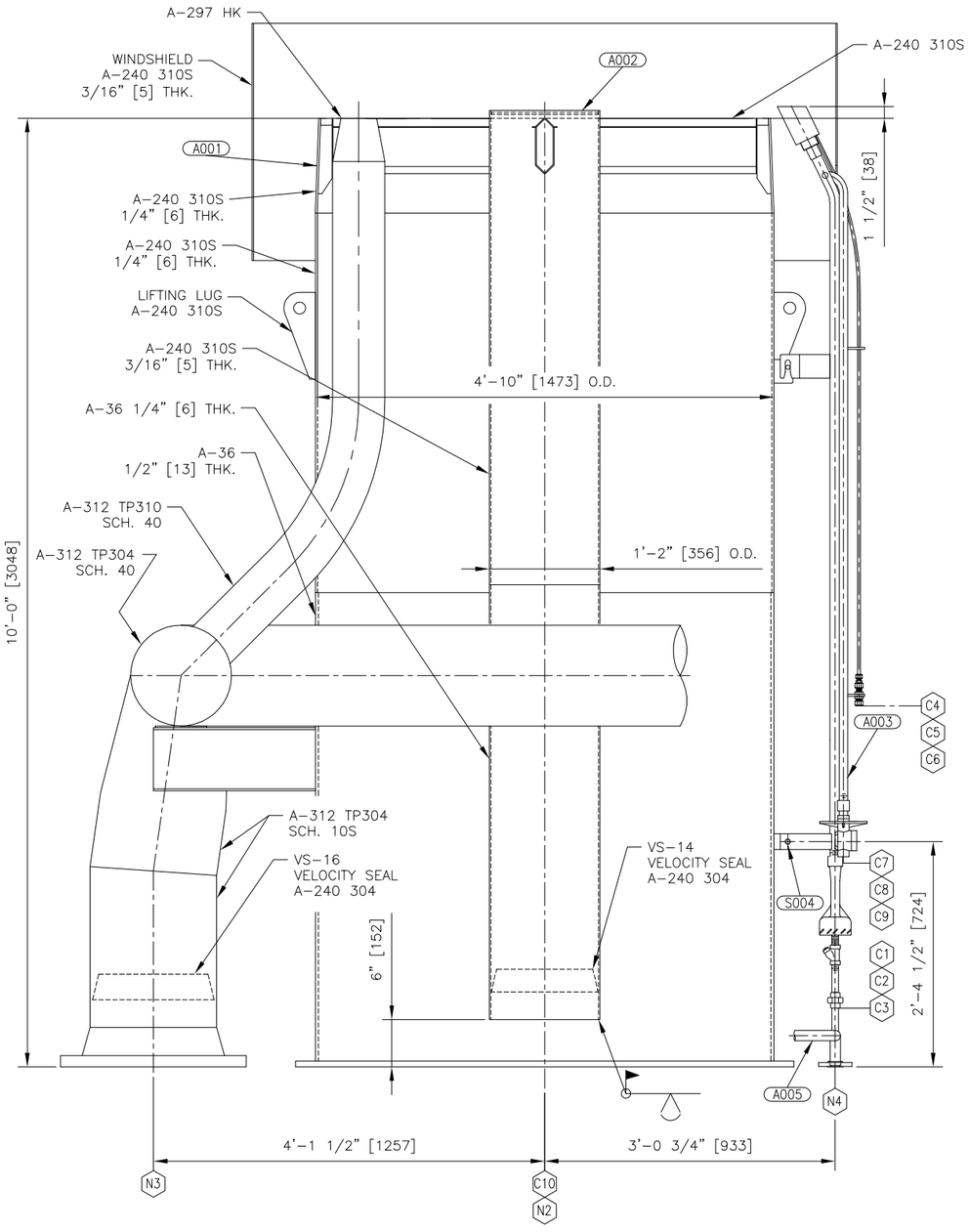

ELEVATION VIEW
(PORTIONS ROTATED FOR CLARITY)

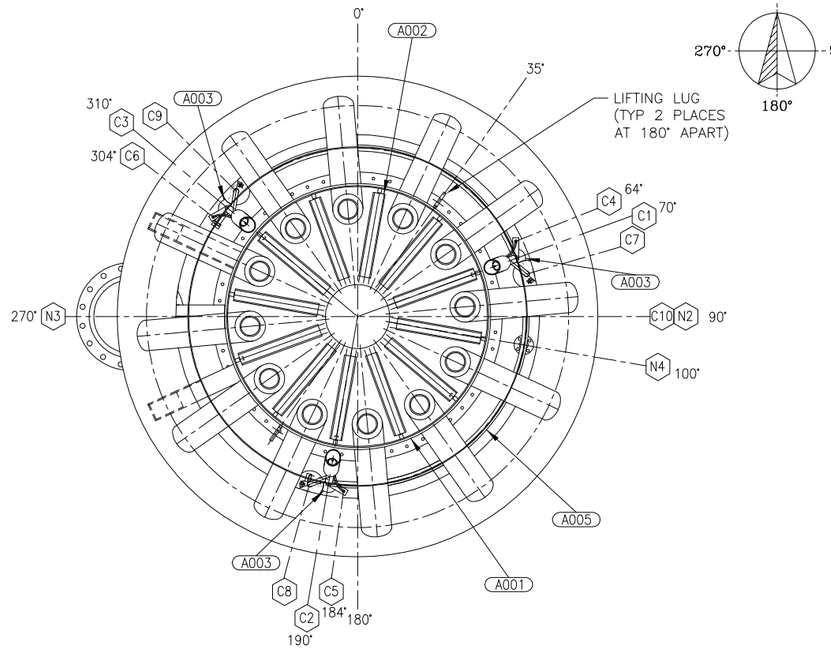

PLAN VIEW
(TRUE ORIENTATION)

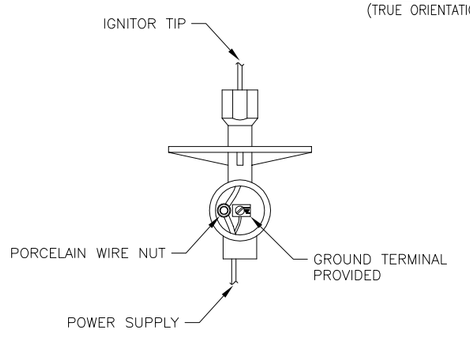

HEI CONNECTION

ZEECO, INC.®
Tulsa, Oklahoma USA
Combustion and Environmental Solutions. Pure and Simple.®

AFDSMJW-14-16/58 FLARE TIP ASSEMBLY
TAG: FL-5100
P.O. 10231-78352

2017	31927
YEAR BUILT	S.O. NUMBER

For parts & service: +1-918-258-8551 / sales@zeeco.com

ZEECO NAMEPLATE

Item	QTY	Description	P/N
A001	1	AFDSMJW-14-16/58 PLENUM ASS'Y	KC-6504-A001
A002	1	AFDSMJW-14-16/58 CENTER ASS'Y	KC-6505-A002
A003	3	HSLF-Z-HEI-RT/C PILOT ASS'Y	MB-4280-A003
		COMPLETE WITH:	
		HEI IGNITION PROBE	
		THERMOCOUPLE (SEE DATASHEET)	
		HSLF-Z MIXER BODY (A-743 CF3M)	
		HSLF-Z MIXER SPUD (316 SS)	
		STRAINER W/PLUG (A-743 CF8M)	
S004	3	HEAVY HEX BOLT: 1/2-13UNC X 1 1/2" LG. (A-193 B8M)	080-001-0069
		W/ HEAVY HEX NUT: 1/2-13 UNC (A-194 GR. 8M)	081-001-0135
A005	1	PILOT MANIFOLD ASS'Y	KC-6506-A005

– NOTES –

1. PILOT MIXER ORIFICE DRILLED: 3/64"ø [1.19 mm]
2. PILOT GAS CONSUMPTION: 65 SCFH @ 15 PSIG PER PILOT [1.74 Nm^3/HR @ 1.05 kg/cm^2 g]
3. PILOT ORIFICE DRILLING BASED ON 1000 BTU/SCF (LHV) [9407 kcal/Nm^3] GAS WITH 0.6 SP. GR.
4. WARM GAS FLARE REQUIRES A MINIMUM CONTINUOUS PURGE RATE OF 290 SCFH [7.77 Nm^3/HR] AND THE COLD GAS FLARE REQUIRES A MINIMUM CONTINUOUS PURGE RATE OF 980 SCFH [26.25 Nm^3/HR] OF A GAS THAT WILL NOT GO TO DEW POINT AT OPERATING TEMPERATURES TO ENSURE AIR DOES NOT MIGRATE DOWN THE FLARE STACK. IT SHOULD BE NOTED THAT DEPENDING UPON THE TURNDOWN OPERATION OF THE FAN AND THE TYPE OF PURGE GAS USED IT MAY BE NECESSARY TO INCREASE THIS MINIMUM PURGE RATE TO ENSURE PROPER COMBUSTION OF THE PURGE GAS DURING IDLE OPERATION.
5. ALL FLARE TIP LIFTING LUGS ARE DESIGNED FOR VERTICAL LIFTS ONLY, NO HORIZONTAL LIFTS OR SIDE LOADS ARE PERMITTED. LUGS ARE INTENDED FOR THE INITIAL INSTALLATION OF ALL FLARE TIPS AND PILOTS ONLY. LIFT LUGS ARE IN THE HEAT AFFECTED ZONE OF ALL FLARE TIPS AND ARE INTENDED TO BE REMOVED BEFORE OPERATION. IF LIFT LUGS ARE USED FOR SUBSEQUENT LIFTS, THEY SHOULD BE THOROUGHLY INSPECTED BY A QUALIFIED INSPECTOR AND DYE PENETRANT TESTS OF 100% OF THE WELDS ATTACHING THE LUGS TO THE FLARE TIP SHELL SHOULD BE PERFORMED
6. ALL FLANGE BOLTING TO STRADDLE NORMAL CENTERLINES.
7. ALL EXTERNAL CARBON STEEL SURFACES TO BE PREPARED PER SSPC-SP6. PRIME WITH ONE COAT INORGANIC ZINC AMERON DIMETCOTE 9 (2-4 MILS DFT MIN.). PAINT ONE COAT SILICONE ENAMEL ALUMINUM (LASTER CASTER LOCK-COAT 9814 ALUMINUM) (1-1.5 MILS DFT MIN.). FINISH COLOR: ALUMINUM
8. ALL TESTING PER INSPECTION TEST PLAN DOCUMENT NO. 31927-4010
9. THE PILOT THERMOCOUPLE IS FOR ON/OFF INDICATION ONLY, NOT FOR ACCURATE MEASUREMENT OF THE PILOT FLAME TEMPERATURE.
10. WHEN INSTALLING THE CENTER ASSEMBLY THE GAS EXIT ARMS MUST BE CENTERED ON THE PILOT AS PER THE PLAN VIEW.
11. APPROXIMATE WEIGHT FOR FLARE TIP ASS'Y: 7,039 LBS [3193 KG]
12. APPROXIMATE WEIGHT FOR EACH PILOT: 100 LBS. [45 KG]

– REFERENCE DRAWINGS –

SD-5777	GENERAL ARRANGEMENT
WC-9055	HEIC-3-T/S IGNITION SYSTEM
YA-2821	P & I DIAGRAM FOR FLARE SYSTEM

– NOZZLE LEGEND –

ITEM	SERVICE	SIZE	RATING	TYPE	SCH/BORE	FLG. MAT'L
C10	WARM GAS INLET	14"	N/A	BW	13 1/2"	A-36
N2	PLENUM AIR INLET	63" O.D. X 3/4" THK. X 58 1/4" I.D. W/ (52) 7/8"ø HOLES ON A 60 1/2" B.C. EQU. SPCD.				A-36
N3	COLD GAS INLET	16"	150#	RFWN	S/10S	304 SS
N4	PILOT GAS MANIFOLD INLET	1"	150#	RFSW	S/40	A-105
C1/C2/C3	PILOT GAS INLET	1/2"	3000#	SW UNION	S/40	304 SS
C4/C5/C6	RT/C CONNECTION	1/2"	N/A	TUBING	N/A	316L SS
C7/C8/C9	HEI CONNECTION	3/4"	N/A	FNPT	N/A	CF3M

NO.	DATE	REVISION DESCRIPTION	BY	CKD.	APP.
0	02JUN17	ISSUED FOR APPROVAL	MKN	GDH	BP

JOBSITE: LOVING, NM
END USER: LUCID ENERGY
S.O. NO.: 31927 | P.O. NO.: 10231-78352 | APP AMZ

ZEECO, INC.
22151 EAST 91st STREET
BROKEN ARROW, OK 74014
PHONE: (918) 258-8551
FAX: (918) 251-5519
www.zeeco.com
sales@zeeco.com

PROPRIETARY DATA IS INCLUDED IN THE INFORMATION DISCLOSED HEREIN AND IS THE PROPERTY OF ZEECO,INC. THIS INFORMATION IS SUBMITTED IN CONFIDENCE AND MUST BE USED IN CONNECTION WITH WORK DONE FOR ZEECO, INC. AND ALL RIGHTS OF DESIGN OR INVENTION ARE RESERVED. UNAUTHORIZED DISCLOSURE OR USE IS PROHIBITED BY LAW.

AFDSMJW-14-16/58
FLARE TIP ASSEMBLY
TAG: FL-5100

FOR: SAULSBURY INDUSTRIES

DRAWN	DATE
MKN	02JUN17
CHK	APP
GDH	BP
SCALE	REV
NONE	0

DRAWING NUMBER
SD-5776
SHT. 1 OF 1

Doug M. Wade 6/6/2017 11:48:53 AM Q:\Job-Information\Flares\31000\31927 Saulsbury (Matthew Adair)\Drafting\Customer\SD-5776-S1R0.dwg Mkn 6/6/2017 7:39:50 AM

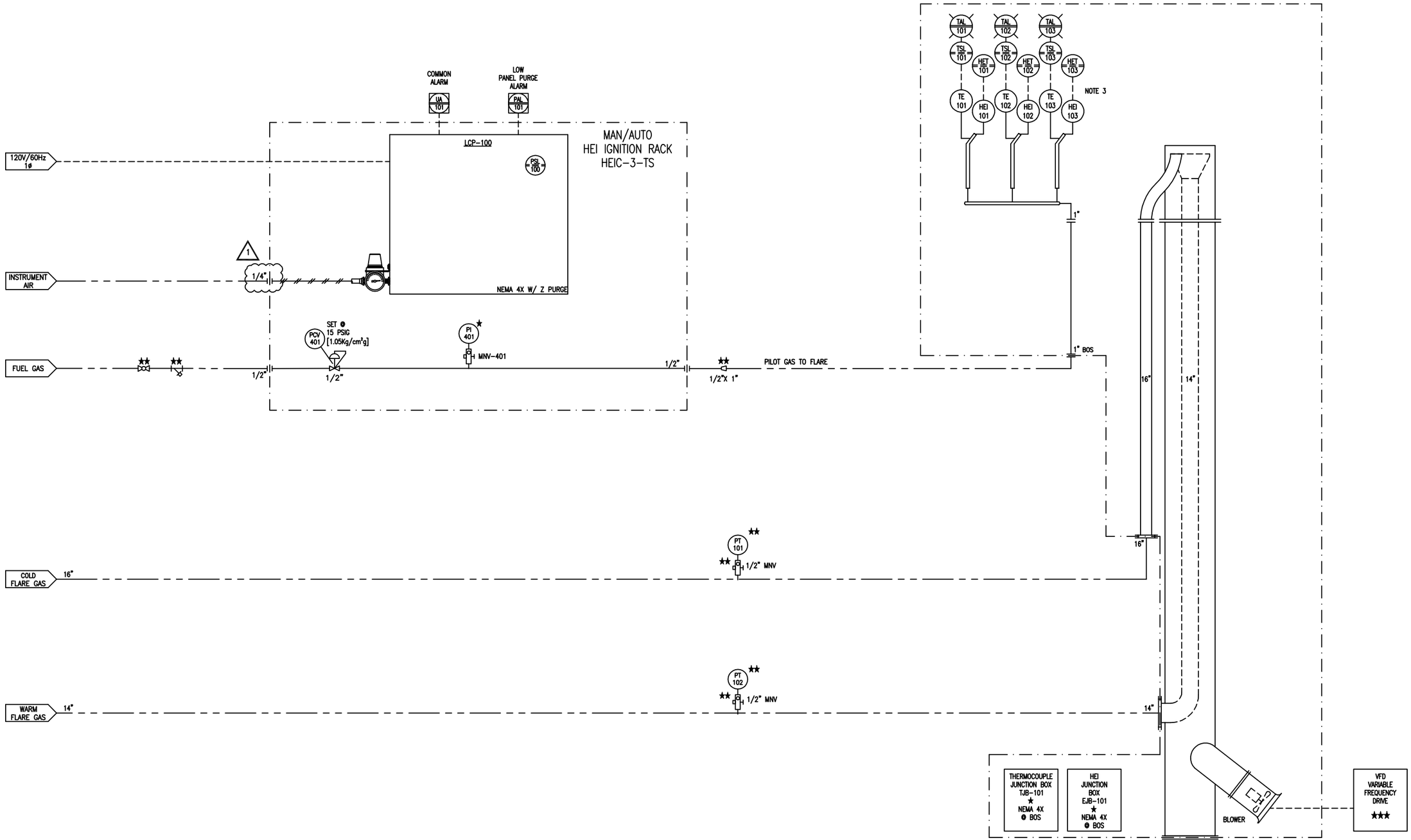

LEGEND

- ELECTRICAL SIGNAL
- PIPING / DUCTING (BY OTHERS)
- BY ZEECO
- 316SS TUBING & FITTINGS (HOKE OR EQUAL) 1/4" UNLESS NOTED OTHERWISE
- ★ ITEMS SHIPPED LOOSE
- ★★ ITEMS SUPPLIED BY OTHERS
- ★★★ MOTOR CONTROL CENTER AND MOTOR STARTER BY OTHERS

- DCS-DISTRIBUTED CONTROL SYSTEM
- LOCAL MOUNTED
- MOUNTED ON LOCAL PANEL
- MOUNTED INSIDE LOCAL PANEL
- LOGIC DEVICE/PLC

NOTES:

1. CLASSIFICATION 1, DIVISION 2 GROUP C,D T2B.
2. THERMOCOUPLES ARE TYPE K, RETRACTABLE.
3. THERMOCOUPLE/HEI WIRING BETWEEN JUNCTION BOXES AT BASE OF STACK AND LOCAL CONTROL PANEL IS SUPPLIED AND INSTALLED BY OTHERS.
4. FUEL GAS SUPPLY FOR PILOT OPERATION IS CONTINUOUS.
5. THE PILOT THERMOCOUPLE IS FOR ON/OFF INDICATION ONLY. IT IS NOT FOR ACCURATE MEASUREMENT OF THE PILOT FLAME TEMPERATURE.

FOR INFORMATION ONLY

NO.	DATE	REVISION DESCRIPTION	BY	CKD.	APP.
1	08JUN17	PER ENGINEERING	MCM	BGB	MAA
0	30MAY17	ISSUED FOR APPROVAL	DWB	BGB	MAA

JOBSITE: LOVING, NEW MEXICO

END USER: LUCID ENERGY

S.O. NO.: 31927 | P.O. NO.: 10231-78352 | APP AMZ

ZEECO, INC.
22151 EAST 91st STREET
BROKEN ARROW, OK 74014
PHONE: (918) 258-8551
FAX: (918) 251-5519
www.zeeco.com
sales@zeeco.com

PROPRIETARY DATA IS INCLUDED IN THE INFORMATION DISCLOSED HEREIN AND IS THE PROPERTY OF ZEECO,INC. THIS INFORMATION IS SUBMITTED IN CONFIDENCE AND MUST BE USED IN CONNECTION WITH WORK DONE FOR ZEECO, INC. AND ALL RIGHTS OF DESIGN OR INVENTION ARE RESERVED. UNAUTHORIZED DISCLOSURE OR USE IS PROHIBITED BY LAW.

PIPING AND INSTRUMENT DIAGRAM

FOR: SAULSBURY INDUSTRIES

DRAWN DWB | DATE 30MAY17

CHK BGB | APP MAA

SCALE NONE | REV 1

DRAWING NUMBER YA-2821 SHT. 1 OF 1

Owner:	Targa		Owner Ref.:	H-1054
Purchaser:	Targa		Purchaser Ref.:	TBD
Manufacturer:	Tulsa Heaters Midstream		THM Ref.:	MJ16-199
Service:	Hot Oil Heater		Project:	Roadrunner Plant
Number:	1		Location:	Jal, NM
SHO Duty:	55.00	MMBTU/ hr	SHO Model:	SHO5000

Guarantees:

NOx	0.0401	Lb/MMBTU	30	ppm
SOx	no quote	Lb/MMBTU	-	ppm
CO	0.0407	Lb/MMBTU	50	ppm
VOC	0.0192	Lb/MMBTU	15	ppm
UHC	0.007	Lb/MMBTU	15	ppm
SPM	0.0133	Lb/MMBTU	15	ppm

		Design Case			
Heat Release	LHV Basis	63.89	MMBTU/hr		
Products of Combustion					
	MW				
O2	32.00	1,786	Lbm/ hr		
N2 + Ar	28.15	45,262	Lbm/ hr		
CO2	44.01	8,217	Lbm/ hr		
H2O	18.02	6,961	Lbm/ hr		
NOx	46.01	2.56	Lbm/ hr /	30	ppm
SOx	64.06	0.00	Lbm/ hr /	0	ppm
CO	28.01	2.60	Lbm/ hr /	50	ppm
VOC	44.10	1.23	Lbm/ hr /	15	ppm
UHC	16.04	0.45	Lbm/ hr /	15	ppm
SPM		0.85	Lbm/ hr /	15	ppm
Total		62,234	Lbm/ hr		
Flue Gas Exit Temp.		517	°F		
Flue Gas Exit Velocity		35.9	Ft/sec		
Stack Height		34.3	ft		
Stack ID		48	in		

NOTE:
THM emissions guarantees applicable between 50-100% of Design Case combustion conditions w/ 15% excess air.

THM emissions guarantees applicable for firebox temperatures above 1100°F.

Emissions above are for Design Case operation with air and fuel in ratio control. Upset conditions, such as operation outside the design, high turndown or start-up are not considered as guaranteed emissions cases.

revision	date	description	by	chk'd	appv'd

This document contains confidential information proprietary to THM. This document shall not be used, reproduced or disclosed without the prior written consent of THM.

Owner:	Targa		Owner Ref.:	H-1054	Ftnt
Purchaser:	Targa		Purchaser Ref.:	TBD	&
Manufacturer:	Tulsa Heaters Midstream, LLC		THM Ref.:	MJ16-199 /	Rev
Service:	Hot Oil Heater		Project:	Roadrunner Plant	
Quantity:	1		Location:	Jal, NM	
SHO Duty:	55.00	MMBTU/ hr	SHO Model:	SHO5000	
BMS Release:	70.28	MMBTU/ hr	BMS Model:	BMS8500	
SHOS Flow:	2,160	USgpm @ 196 ft TDH	SHOS.Model:	SHOS2220	

PROCESS DESIGN CONDITIONS

		Radiant / Convection	Radiant / Convection	Radiant / Convection	Radiant / Convection
Heater Section	- - -				
Operating Case	- - -	Design			
Service	- - -	Hot Oil Heater			
Heat Absorption (R/C)	MMBTU/ hr	36.39 / 18.61			
Process Fluid	- - -	Chemtherm 550			
Process Mass Flow Rate, Total	Lb/ hr	885,000			
Process Bulk Velocity (calc. R/C)	ft/ s	8 / 8			
Process Mass Velocity (calc. R/C)	Lb/ s ft2	408 / 408			
Coking Allowance (dP calcs)	in				
Pressure Drop, Clean (allow. / calc.)	psi	30 / 16			
Pressure Drop, Fouled (allow. / calc.)	psi				
Average Heat Flux (allowable)	BTU/ hr ft2	13,000			
Average Heat Flux (calculated)	BTU/ hr ft2	12,410			
Maximum Heat Flux (allowable)	BTU/ hr ft2				
Maximum Heat Flux (calc. R/C)	BTU/ hr ft2	22,700 / 26,310			
Fouling Factor, Internal	hr ft2 °F/ BTU	0.002			
Corrosion or Erosion Characteristics	- - -				
Max. Film Temperature (allow. / calc.)	°F	635 / 518			
Inlet Conditions:					
Temperature	°F	295			
Pressure	psig	80			
Mass Flow Rate, Liquid	Lb/ hr	885,000			
Mass Flow Rate, Vapor	Lb/ hr	0			
Weight Percent, Liquid / Vapor	wt%	100% / 0%			
Density, Liquid / Vapor	Lb/ ft3	51.10 / 0.00			
Molecular Weight, Liquid / Vapor	Lb/ Lbmole	- - - / 0.0			
Viscosity, Liquid / Vapor	cp	2.046 / 0.000			
Specific Heat, Liquid / Vapor	BTU/ Lb °F	0.5675 / 0.000			
Thermal Conductivity, Liq./Vap.	BTU/hr ft °F	0.0702 / 0.000			
Outlet Conditions:					
Temperature	°F	400			
Pressure	psig	64			
Mass Flow Rate, Liquid	Lb/ hr	885,000			
Mass Flow Rate, Vapor	Lb/ hr	0			
Weight Percent, Liquid / Vapor	wt%	100% / 0%			
Density, Liquid / Vapor	Lb/ ft3	48.82 / 0.00			
Molecular Weight, Liquid / Vapor	Lb/ Lbmole	- - - / 0.0			
Viscosity, Liquid / Vapor	cp	1.001 / 0.000			
Specific Heat, Liquid / Vapor	BTU/ Lb °F	0.618 / 0.000			
Thermal Conductivity, Liq./Vap.	BTU/hr ft °F	0.068 / 0.000			

revision	date	description	by	chk'd	appv'd
A		Issued with Proposal			

This document contains confidential information proprietary to THM. This document shall not be used, reproduced or disclosed without the prior written consent of THM.

Owner Ref.: H-1054 THM Ref.: MJ16-199

Ftnt & Rev

COMBUSTION DESIGN CONDITIONS

Overall Performance:						
Operating Case	---	Design				
Service	---	Hot Oil Heater				
Excess Air	mol%	15.0%				
Calculated Heat Release (LHV)	MMBTU/ hr	63.89				
Guaranteed Efficiency	HR%	84.1%				
Calculated Efficiency	HR%	86.1%				
Radiation Loss	HR%	2.00%				
Flow Rate, Combustion Gen./ Imp.	Lb/ hr	62,234				
Flue Gas Temp. Leaving (R/C)	°F	1,520 / 517				
Flue Gas Mass Velocity	Lb/ sec ft2	0.667				

Fuel(s) Data:		Gas 1 Mol.Wt.	Gas 2 Mol.Wt.	Gas 3 Mol.Wt.	Design Fuel Oil
LHV	BTU/ scf	937			---
LHV	BTU/ Lb	21,012			
P @ Burner	psig	75			
T @ Burner	°F	100			
MW	Lb/ Lbmole	16.93			---
Flow @ design	lb/hr	3,041			
Flow @ design	scfh	68,172			
Atomizing Media		---			
Atom. Media P & T		---			

Components:					
N	wt%	---			
S	wt%	---			
Ash	wt%	---			
Ni	ppm	---			
Va	ppm	---			
Na	ppm	---			
Fe	ppm	---			
H2	mol%	0.0%			---
O2	mol%	0.0%			---
N2 + Ar	mol%	1.0%			---
CO	mol%	0.0%			---
CO2	mol%	0.1%			---
CH4	mol%	97.0%			---
C2H6	mol%	2.3%			---
C2H4	mol%	0.0%			---
C3H8	mol%	0.1%			---
C3H6	mol%	0.0%			---
C4H10	mol%	0.6%			---
C4H8	mol%	0.0%			---
C5H12	mol%	0.0%			---
C5H10	mol%	0.0%			---
C6+	mol%	0.0%			---
H2S	ppmv	0.0%			---
SO2	mol%	0.0%			---
NH3	mol%	0.0%			---
H2O	mol%	0.0%			---
spare	mol%	0.0%			---

Blower/Fan Peformance:		
Volumetric Flow	acfm	13,000
Rated Power	HP	40
Fan Speed	RPM	1,800
Sound Pressure	dBA	< 85
Area Classification	NEC	Class I, Div. II, Groups C&D

Burner Design:			
OEM	---	Callidus Technologies, LLC	
Type	---	Enhanced IFGR	
Quantities	---	1	ULTRA Low NOx
Model No.	---	CUBL-16W-HC-HZ	Cylindrical
Windbox	---	yes ...	
Location	---	EndWall Center ...	Horizontally Fired
Pilot Design:			
Type / Model		Self-Inspirating /	by O.E.M.
Ignition	---	Electric	requires elec.ign.system
Heat Release	--	> 350000 BTU/ hr on ...	Gas 1

Burner Performance:			
Minimum Heat Release	MMBTU/ hr	14.06	
Design Heat Release	MMBTU/ hr	63.89	
Maximum Heat Release	MMBTU/ hr	70.28	
Burner Turndown	Max:Min	5.00	
Volumetric Ht. Release	BTU/ hr ft3	7,743	
Pressure @ Arch	inH2O	1.60	
Pressure @ Burner	inH2O	8.22	
Combustion Air T @ Burner	°F	60	
Flue Gas T @ Burner	°F	1,320	

Guaranteed Emissions:			
Basis of Guarantee	---	3.0% O2,	dry (LHV)
NOx Emissions	Lb/MMBTU	0.040	30 ppm
SOx Emissions	Lb/MMBTU	no quote	
CO Emissions	Lb/MMBTU	0.041	50 ppm
VOC Emissions	Lb/MMBTU	0.019	15 ppm
UHC Emissions	Lb/MMBTU	0.007	15 ppm
SPM10 Emissions	Lb/MMBTU	0.013	15 ppm
Noise Emissions	dBA @ 3ft	85	

Net Flame Clearances:	
Est. Flame Size	approx. 34.5 ft L x 6 ft Diameter
Hor Clearance	3.5 ft NET Tube Clearance
Vert. Clearance	3.5 ft NET Tube Clearance
Axial Clearance	6.67 ft NET Refractory Clearance (to Target hot face)

Nominal Flame Clearances:			
from burner CL ...		Vertical	Horizontal
to Tube CL, API	ft	28.60	19.07
to Tube CL, calc.	ft	6.50	6.50
to Refrac., calc.	ft	n / a	41.17

Owner Ref.: H-1054 THM Ref.: MJ16-199

PRESSURE PARTS DESIGN

Coil Design:		RADIANT	SHIELD	CONVECTION
Service		Hot Oil Heater	Hot Oil Heater	Hot Oil Heater
Design Basis for Tube Temperature		API 530	API 530	API 530
Design Basis for Tube Wall Thickness		ASME Sec. VIII-1	ASME Sec. VIII-1	ASME Sec. VIII-1
Design Life	hr	100,000	100,000	100,000
Design Pressure (elastic / rupture)	psig	250 /	250 /	250 /
Design Fluid Temperature	°F	400	400	400
Design Temperature Allowance	°F	25	25	25
Design Corrosion Allowance (tubes/fittings)	in	0.063 / 0.063	0.063 / 0.063	0.063 / 0.063
Maximum Tube Temperature (clean)	°F	540		
Maximum Tube Temperature (fouled)	°F	590	485	588
Design Tube Temperature	°F	615	613	613
Inside Film Coefficient	BTU/ hr ft2 °F	210	164	164
Weld Inspection	RT or Other	100 of 10%	100 of 10%	100 of 10%
Weld Heat Treatment	s.rel., t.stab. or none	None	None	None
Hydrostatic Test Pressure	psig	per API	per API	per API
Coil Arrangement:		Horizontal	Horizontal	Horizontal
Coil Type	- - -	Helical	Serpentine	Serpentine
Tube Material (pipe or tube spec)	ASTM	SA106GrB	SA106GrB	SA106GrB
Supplementary Mfg Requirements	ASTM	None	None	None
Tube Outside Diameter	in	6.625	6.625	6.625
Tube Wall Thickness (aw / mw)	in	0.280 / 0.245	0.280 / 0.245	0.280 / 0.245
Number of Cells (radiant or convection)	- - -	1	1	1
Number of Flow Passes (total / cell)	- - -	3 / 3	3 / 3	3 / 3
Number of Tubes per Row (total / cell)	- - -		4 / 4	4 / 4
Overall Tube (1 turn in radiant) Length	ft	40.84	16.04	16.04
Effective Tube Length / Helix Diameter	ft	40.84 / 13.00	14.46	14.46
Number of Turns or Tubes (total / pass)		41.4 / 13.8	4.0 / 4.0	0.0 / 0.0
Total Exposed Surface	ft2	2,932	100	0
Number of Ext.Surf. Tubes (total / cell)	- - -	0 / 0.0	0 / 0.0	36 / 36.0
Total Exposed Surface	ft2	0	0	8,599
Tube Spacing (horiz. / tube centers)	in	- - - / 11.50	12.00 / 12.00	12.00 / 12.00
Tube Spacing (horiz. to refractory)	in	9.00	6.00	6.00
Coil Fluid Volume	USgal	2632	104	935
Coil Fittings:		Hot Oil Heater	Hot Oil Heater	Hot Oil Heater
Fitting Type	- - -	SR 90° Elbows	SR 180° U-Bends	SR 180° U-Bends
Fitting Material	ASTM	SA234 WPB	SA234 WPB	SA234 WPB
Supplementary Mfg Requirements	ASTM	None	None	None
Fitting Outside Diameter	in	6.625	6.625	6.625
Fitting Wall Thickness (aw / mw)	in	0.280 / 0.245	0.280 / 0.245	0.280 / 0.245
Fitting Location	internal or external	Internal	External	External
Tube Attachment	welded or rolled	Welded	Welded	Welded
Coil Terminals:		Outlet		Inlet
Terminal Type	beveled or flanged	Flanged		Flanged
Flange Material	ASTM	SA105N		SA105N
Supplementary Mfg Requirements	ASTM	None		None
Flange Size and Rating	NPS/ ASME	6" NPS / 300#		6" NPS / 300#
Flange Type	RFWN or RTJ	RFWN		RFWN
Location	- - -	Burner Endwall		Terminal End
Extended Surface:		CONVECTION	CONVECTION	CONVECTION
Service	- - -	Hot Oil Heater	Hot Oil Heater	Hot Oil Heater
Fin or Stud Row Number	starting @ bottom	No.1 / No.2-3	No.4-5 / No.6-9	/
Ext. Surface Type	seg.fins, solid fins, studs	HF Seg. Fins	HF Seg. Fins	
Fin/Stud Material	- - -	C.S. / C.S.	C.S. / C.S.	/
Fin/Stud Height	in	0.50 / 0.50	0.75 / 1.00	/
Fin/Stud Thickness	in	0.06 / 0.06	0.06 / 0.06	/
Fin/Stud Density	fin/ in	3.00 / 5.00	5.00 / 5.00	/

PRESSURE PARTS DESIGN (continued)

			RADIANT	SHIELD	CONVECTION	
Crossovers:						
Type, location / connections	- - -		External	/ Flanged	None	
Tube / Fittings Material	ASTM		SA106GrB	/ SA234 WPB		
Tube & Fitting OD / Thickness (aw)	in		6.625	/ 0.280		
Inlet Manifold(s):	type				Simple LOG	
Location	- - -				Top - Term. End	
Design Basis for Manifold Thickness	- - -				ASME B31.3	
Design Conditions (temp./press.)	°F/ psig				613 / 250	
Pipe Material	ASTM				SA106GrB	
Fittings Material	ASTM				SA234 WPB	
Flange Material / Style	ASTM				SA105N / RFWN	
Outside Diameters, each Branch	in				16" NPS	
Wall Thickness(es); aw ~~or mw~~	in				SCH40 (0.5)	
End Types (terminal/ dead)	beveled or flanged				Flanged / W.Cap	
Manifold Terminal Type	NPS/ ASME				16" NPS / 300# Flg	
Coil Connection Type	extrusion, olet, etc.				Weld-O-Let	
Coil Terminal Type	NPS/ ASME				6" NPS / 300# Flg	
Outlet Manifold(s):	type		Simple LOG			
Location	- - -		Burner Endwal			
Design Basis for Manifold Thickness	- - -		ASME B31.3			
Design Conditions (temp./press.)	°F/ psig		615 / 250			
Pipe Material	ASTM		SA106GrB			
Fittings Material	ASTM		SA234 WPB			
Flange Material / Style	ASTM		SA105N / RFWN			
Outside Diameters, each Branch	in		16" NPS			
Wall Thickness(es); aw ~~or mw~~	in		SCH40 (0.5)			
End Types (terminal/ dead)	beveled or flanged		Flanged / W.Cap			
Manifold Terminal Type	NPS/ ASME		16" NPS / 300# Flg			
Coil Connection Type	extrusion, olet, etc.		Weld-O-Let			
Coil Terminal Type	NPS/ ASME		6" NPS / 300# Flg			

COIL & MANIFOLD SUPPORTS DESIGN

			RADIANT	SHIELD	CONVECTION	
Tube Supports:						
Service			Hot Oil Heater	Hot Oil Heater	Hot Oil Heater	
Location	Top, Bottom, Ends		Bottom	Ends	Ends	
Support Type	casting, tubesht, spring, etc.		SS Pipe Rail	Welded Tbsheets	Welded Tbsheets	
Support Thicknesses	in		SCH40	0.375	0.375	
Support Materials	ASTM		A240 T304	A36 CS	A36 CS	
Support Temperatures (calc./ design)	°F / °F		951 / 1,140	628 / 780	628 / 780	
TbSht Ferrules Thickness/Materials	in/ ASTM		- - - / - - -	14 ga. / 304 SS	14 ga. / 304 SS	
Refractory & Anchor Materials & Types			none	per refrac. section	per refrac. section	
Intermediate Guides & Supports:			None	None	None	
Location	- - -					
Guide/ Support Type	casting, spring, etc.					
Material	ASTM					
Spacing, average	ft					
Tube Guides:	Top, Bottom, Ends		None	None	None	
Material	ASTM					
Manifold Supports:			Outlet Manifold		Intlet Manifold	
Material	ASTM		A36		N/A	
Materials Design & Supply	- - -		by THM			
Location	Top, Bottom, Ends		Burner Endwal			
Support Type	roller, shoe, spring, etc.		Simple Shelf			
Number of Supports	- - -		One (1)			

CASING / REFRACTORY SYSTEMS DESIGN

			BURNER		SHIELDED	TARGET
Radiant Section Design:			ENDWALL		SIDEWALLS	ENDWALL
Total Refractory Thickness		in	5.0		3.0	5.0
Hot Face Temperature (design)		°F	2,000		2,000	2,000
Hot Face Temperaure (calculated)		°F	1,520		951	1,520
Hot Face Layer		in/ - - -	1/ 8# CF Blanket		1/ 8# CF Blanket	1/ 8# CF Blanket
Back-Up Layer No.1		in/ - - -	1/ 8# CF Blanket		2/ 6# CF Blanket	1/ 8# CF Blanket
Back-Up Layer No.2		in/ - - -	3/ 6# CF Blanket		None	3/ 6# CF Blanket
Foil Vapor Barrier		in/ - - -	None		None	None
Castable Reinforcement (SS Needles)		wt%	None		None	None
Anchors / Tie Backs:		- - -	Pins & Clips		Pins & Clips	Pins & Clips
Material		- - -	310 S.S.		304 S.S.	310 S.S.
Attachment		- - -	Welded		Welded	Welded
Casing:						
Material		in/ ASTM	0.1875 / A36		0.1875 / A36	0.1875 / A36
Internal Coating		- - -	None		None	None
External Temperature, Typical		°F	180		180	180
Comments / Clarifications		- - -	w/ cfb wraps		w/o cfb wraps	w/ cfb wraps
			SHOP Installed		SHOP Installed	SHOP Installed

			SIDEWALLS		ENDWALLS	
Convection Section Design			SHIELD	FINNED	TUBESHEETS	HEADER BOXES
Total Refractory Thickness		in	3.0	3.0	3.0	2.0
Hot Face Temperature (design)		°F	2,000	2,000	2,200	2,000
Hot Face Temperaure (calculated)		°F	1,019	1,019	1,019	739
Hot Face Layer		in/ - - -	1/ 8# CF Blanket	1/ 8# CF Blanket	3/ Sparlite HS	1/ 8# CF Blanket
Back-Up Layer No.1		in/ - - -	2/ 6# CF Blanket	2/ 6# CF Blanket	None	1/ 8# CF Blanket
Back-Up Layer No.2		in/ - - -	None	None	None	None
Foil Vapor Barrier		in/ - - -	None	None	None	None
Castable Reinforcement (SS Needles)		wt%	None	None	None	None
Anchors / Tie Backs:		- - -	Pins & Clips	Pins & Clips	Bullhorns	Pins & Clips
Material		- - -	310 S.S.	304 S.S.	304 S.S.	304 S.S.
Attachment		- - -	Welded	Welded	Welded	Welded
Casing:						
Material		in/ ASTM	0.1875 / A36	0.1875 / A36		0.1345 / A36
Internal Coating		- - -	None	None	None	None
External Temperature, Typical		°F	180	180		180
Comments / Clarifications		- - -	Cleaning/Sootblowing lanes: none			Bolted Assembly
		- - -	SHOP Installed	SHOP Installed	SHOP Installed	SHOP Installed

			FLUE GAS DUCTS			
Stack & Uptakes Design:			BREECHING	15° TRANSITION	DISCH. DUCT	
Quantity			One	One	One	
Type / Location		- - -	Full L / Conv	Full L / Conv	Self.Spt / Grade	
Length / Metal Outside Diameter (top)		ft/ ft	1.00 / n/ a	2.02 / n/ a	7 / 4.000	
Discharge Elev., minimum/ calculated		ft/ ft	n/ a / n/ a	n/ a / n/ a	20 / 34	
Total Refractory Thickness		in	3.0	0.0	0.0	
Hot Face Temperature (design)		°F	2,000			
Hot Face Temperaure (calculated)		°F	517	517	517	
Hot Face Layer		in/ - - -	1/ 8# CF Blanket	None	None	
Back-Up Layer No.1		in/ - - -	2/ 6# CF Blanket			
Castable Reinforcement (SS Needles)			None			
Anchors / Tie Backs:		- - -	Pins & Clips			
Material		- - -	304 S.S.			
Attachment		- - -	Welded			
Casing:						
Minimum Thickness/ Materia		in/ ASTM	0.1875 / A36	0.1875 / A36	0.1875 / A36	
Corrosion Allowance		in	None	None	None	
Internal Coating		- - -	None	None	None	
External Temperature, Typical		°F	180	517	517	
Comments / Clarifications		- - -	SHOP Installed			

Owner Ref.: H-1054 THM Ref.: MJ16-199

MECHANICAL / STRUCTURAL DESIGN BASIS

Refractory & Coatings Design:

Refractory Design	Per Std560: 180°F Avg. Casing Temperature @ Ambient Conditions of 0 MPH & 80°F
Refractory Dryout	SHOP dryout = None // FIELD dryout per THM standard.
Coating, Internal	None
Coating, External	Base Coat: 3-4 PPG Dimetcote 9 IOZ Silicate - Flat Green on SP-6
	Int. Coat: None
	Top Coat: 1.5-2 PPG Pitt-Therm 97-724 Series Air Dry Silicone - Federal Standard 595B #16132 Gray

Applicable Standards:

API	~~Std 560 (ISO 13705); Fired Heaters for ...~~	AISC	Specification for Design, ... Steel for Buildings
API	Std 530 (ISO 13704); Calc. of Heater Tube ...	AWS	D 1.1; Structural Welding Code
ASME	B31.3, Chemical Plant and ... Piping	ASTM	tube/ smls pipe/ fitting spec's noted hereir
ASME	Sections I, II, VIII, IX; ASME B&PV Code	ASTM	refractories per C27, C155, C401 & C612
ASME	Section V; Non Destructive Examinatior	NFPA	NFPA 70; National Electrical Code

Wind Design:		Seismic Design:	
Spec. or Standard	ASCE 7-10	Spec. or Standard	ASCE 7-10
Velocity/ Imp. Factor	120 mph / 1	Risck Cat./Imp. Factor	III / 1.25
Site Exposure	"C"	Ss/S1/Soil Class	0.5 / 0.15 / D
Physical Design:		Site Design Basis:	
Plot Limitations	None	Site Elevation	25 ft AMSL
Tube Limitations	None	Stack Design Temp.	90 °F
Firebox Pressure	Positive; approximately +1.0 inH2O	FG Discharge Elev.	34 ft AG
Ambient Temp's	-20 °F Min/ 60 °F Dsn/ 105 °F Max	Area Classification	Class I, Div. II, Groups C&D

MAJOR SUBSYSTEMS & ACCESSORIES

Major Services & Subsystems		Major Accessories:	
Process Design	INCLUDED in base pricing	Casing/ Tube Seals	12 TubeSox; Radiant & Conv.
Mechanical Design	INCLUDED in base pricing	Observation Doors	2 4 in Dia. w/ H.T. glass
Structural Design	INCLUDED in base pricing	Observation Doors	1 4 in Dia. w/ HT glass on Arch
Radiant Section	INCLUDED in base pricing	Access Doors	1 Std 24" x 24"
Convection Section	INCLUDED in base pricing	Expansion Joints	None
Burner Mgmt	INCLUDED in base pricing	Ladders & Platforms	Not Included
Burner Piping	INCLUDED in base pricing	L&P Coating	N/A
Forced Draft System	INCLUDED in base pricing		

Casing Penetrations		Pressure Part Penetrations	
Fbox Purge/ Snuff	None	Coil TSTC's, Radiant	None
CA Temp/Pres	None	Coil TSTC's, Convection	None
FG Temperature	2 1.5"NPS 3000# Coupling	Process TI conn's	3 1.5" NPS 300# RFWN
FG Pressure	2 1.5"NPS 3000# Coupling	Process PI conn's	1 1.5" NPS 300# RFWN
FG Comp. (Sample)	2 1.5"NPS 3000# Coupling	spare	
FG Sample	2 4"NPS 150# RFWN's	spare	
O2 Analyzer Port	None	spare	

Dampers

	FD Fan (blower) qty = 0	Uptake Ducts	Stack qty = 0
Function	Note:		Note:
Design	Fan inlet damper is inappropriate		Stack Damper (which provides draft
Materials	for forced draft SHO's where O2		control) is inappropriate for forced
Bearings	Control is provided by the BMS O2		draft SHO's where the combustion
Operator	Trim Module which controls the fan		conditions are controlled real-time
Positioner	(blower) motor's VFD/ VSD.		via the BMS.
Instruments			

Sootblowers:	Qty.	Type	Location	FG T	Material	Steam T & P	O.E.M. / Ref.
Lane 1:	None						
Lane 2 :	None						

THOMAS RUSSELL CO.
Tulsa, Oklahoma

JOB NO:	TRJ-250	DATE:	9/21/2010
CLIENT:	Southcross Energy	BY:	JRG
SUBJECT:	200 MMscfd Cryo Plant		

FIRED HEATER

Service:	Regen Gas Heater	Tag No:	H-741
Design Duty, MBTU/Hr	5248	Type:	Helical Coil
No. of Coils per Unit	One	No. Units: One	Model: Heatec HCI-5010-40-G

Fluid		Regen Gas Inlet	Regen Gas Outlet
Liquids	Lbs/Hr	0	0
Density	Lbs/CuFt		
Molecular Weight			
Specific Heat	BTU/Lb °F		
Thermal Cond.	BTU/Hr-Ft-°F		
Viscosity	cP		
Vapor	Lbs/Hr	19013	19013
Density	Lbs/CuFt	3.389	1.716
Molecular Weight		19.68	19.68
Specific Heat	BTU/Lb °F	0.6261	0.7407
Thermal Cond.	BTU/HrFt °F	0.0239	0.0438
Viscosity	cP	0.0140	0.0195
Operating Temp.	°F	135	550
Operating Pressure	PSIA	950	
Velocity	Ft/Sec	Allow.	Calc.
Pressure Drop	PSI	10 Allow.	Calc.
Fouling Resistance	SqFt*F/BTU	0.001	
Design Press. / Temp.		1095 PSIG	650 °F
Min. Design Mtl. Temp.		-20 °F @	1095 PSIG
Corrosion Allowance		0.0625	
Insulation Thickness		3" - 5" ceramic fiber on the interior	
Efficiency-Based on LHV	(%)	85.0%	(Assume 3% Loss)
Excess Air		15	
Firebox Unit Heat Release		27,800	BTU/Hr- Ft^3
Number of Passes		One - process, Two - fireside	

Burners		Gas	Oil
LHV	(BTU/cf)	973	
Mol. Wt.		18.26	
Gravity			
Pressure Avail.	(psig)	100	
Pressure Req'd	(psig)	10	
Steam for Atomizing			
Fuel Gas Req'd (MSCFD)		156.86	N/A
Mfgr:		Eclipse WINOX	
Type:		Forced Draft - 20 Hp Blower	
Number Req'd		One	
Pilots Req'd		Yes , electrical ignition	
NOx		40 ppm	

Structural Design	
Wind Load, MPH, (3)	90, Exp.C, I=1.15, Cf=0.7
Seismic Zone, (3)	I = 1.25
Ambient, °F	-20 / 110
Elevation, Ft	750

Stack Design	
Self-supporting	Yes
Minimum Height	8 ft above top of heater
Minimum Wall Thickness:	0.125
Lining Type	No
Lining Thickness:	No
Damper:	No

Coil Design		Radiant	Convection-Bare	Convection-Finned	
Gas Temperature	In/Out	135 / 550			
Number Tubes		One			
Tube O.D.	In	Single Circuit 4"	4" 900# RTJ Flg	Inlet and Outlet	
Tube Length	Eff. Ft	-----			
Bare Surface	Sq Ft	697			
Finned Surface	Sq Ft	N/A			
Avg. Heat Flux	BTU/Hr-Sq Ft	8,278			
Tube Materials		SA-106 Gr.B Sch 80	SA-	SA-	

Convection Fins (inch):	Height:	Thickness:	No. / inch:	Material:	
Overall Dimension:	25' - 8" L x 7' - 0" W x 8' - 6" H (less stack)			Dry Weight:	18,450 lbs
Code Requirements:	ASME VIII Div I		Stamp: Yes	Nat'l Board:	Yes

Notes:

1) **Add 30% to duty and 10% flow rates for design.**
2) See attached Scope of Supply.
▲ 3) Wind design per ASCE 7-10, V=150 mph, Exposure C. Seismic design per ASCE 7-10, I=1.25, Site D. , S_S =40% , S_1 =8%
4) Electric power to be 480 v / 3 ph / 60 hz. Control enclosures to be NEMA 4.
5) Add Spare ignitor.

REVISION	A	0	1	▲ 2
ENGINEER/DATE	JRG 9/21/10	JRG 9/21/10	JRG 9/14/11	MTR 9/20/11
ISSUED FOR	RFQ	Purchase	Revised	Revised

HEATER DESIGN DATA

INPUT: 7,387,616 X 1.3 BTU/HR
OUTPUT: 5,770,000 X 1.3 BTU/HR
FLOW RATE: 20,840 X 1.1 LBS/HR
TRANSFER MEDIA: REGENERATION GAS
HEATING SURFACE: 741 SQ FT
DESIGN: 1095 PSI @ 650 F
ASME CODE: SECTION VIII, DIV 1 2010 EDITION, NO ADDENDA
OUTLET MEDIA TEMP: 550 F
PRESSURE DROP: 6 PSI
ESTIMATED DRY WEIGHT: 23,500 LBS

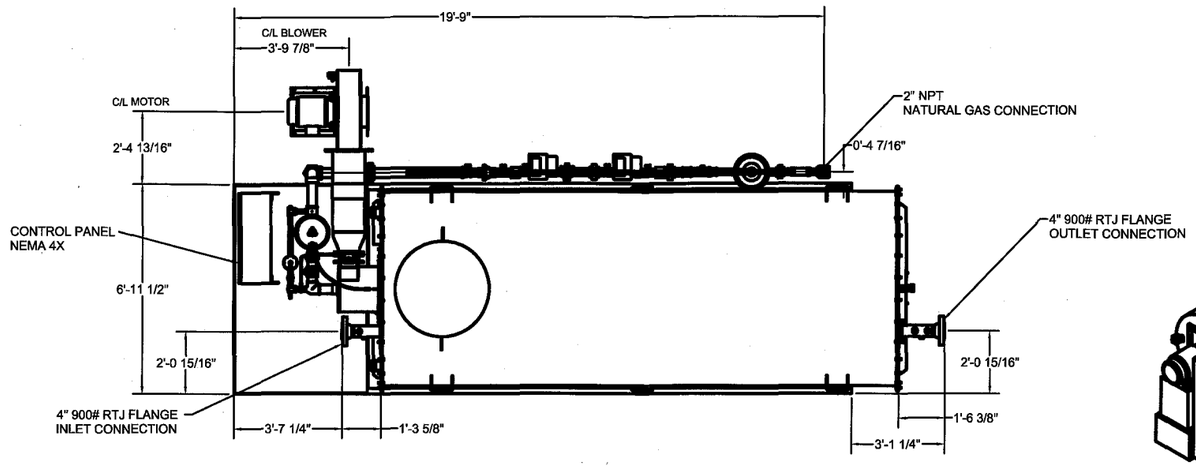

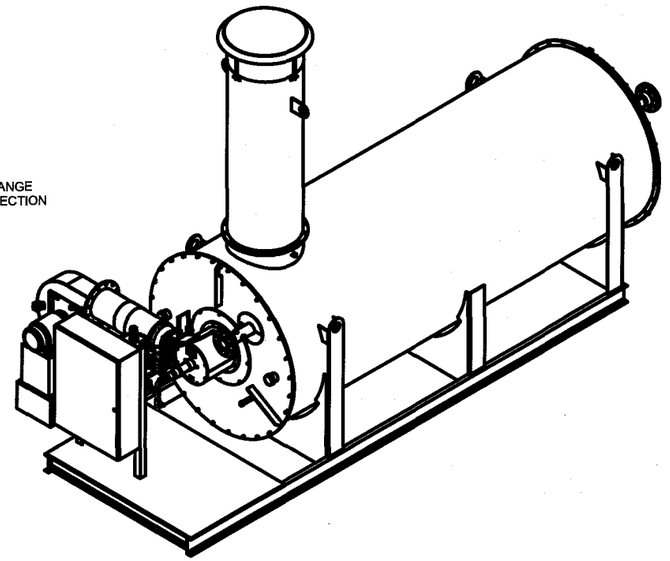

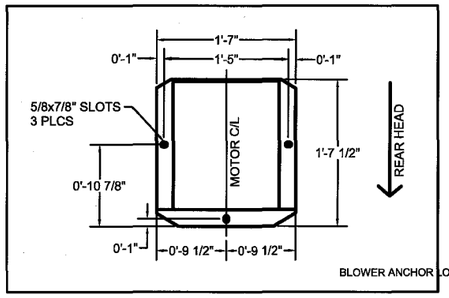

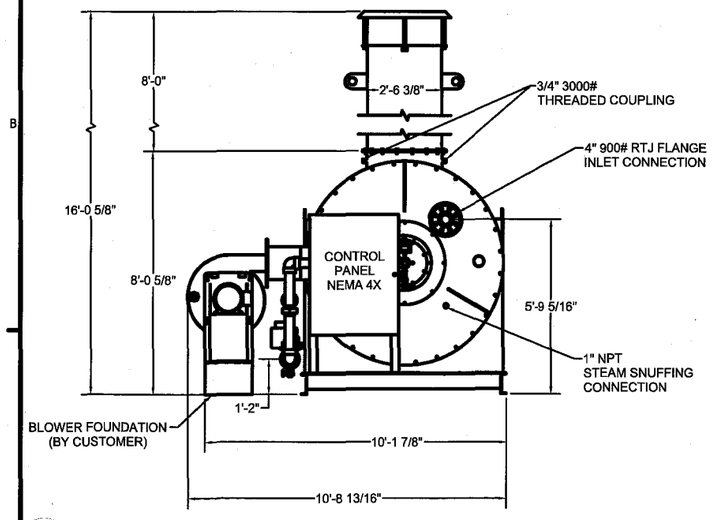

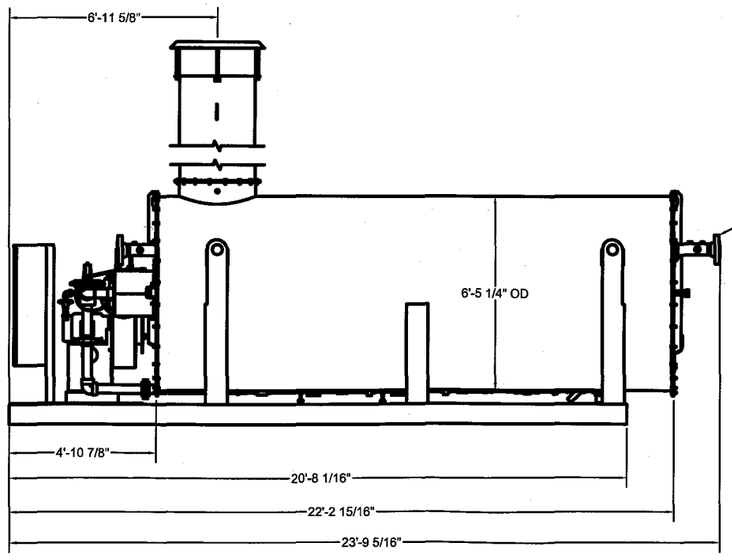

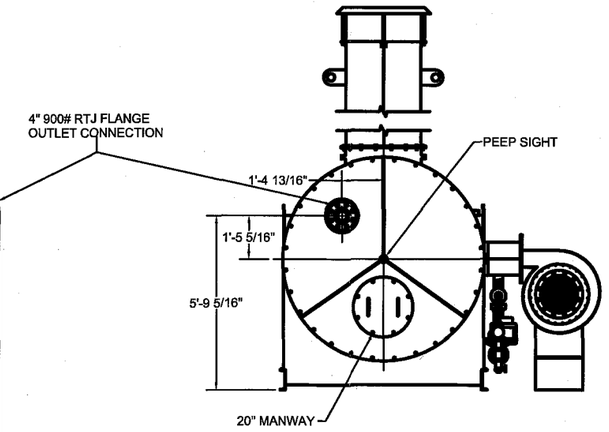

APPROVED FOR CONSTRUCTION

THOMAS RUSSELL CO. PO: 250-13
TRCO. JOB NUMBER: TRJ-250
TAG NUMBER: H-741
REGEN GAS HEATER

CUSTOMER: THOMAS RUSSELL	JOB#: HI 11-038
DRAWING NAME: GENERAL ARRANGEMENT HCI 5010-40-G	WO#: 11-038-000
	ISSUE DATE:

HEATEC Inc. an Astec company
P.O. BOX 72760 CHATTANOOGA, TN 37407
PHONE: (423) 821-5200 FAX: (423) 821-7673

DWG. DATE: 02-04-2011 MRP	CHK DATE:	APPR. DATE:	
DWG.PART#: 11038 - GA		REV.: 0	SCALE: NA	WEIGHT: NA

TOLERANCE IS +/- 1/16" UNLESS OTHERWISE NOTED.

THIS DRAWING AND THE DESIGN SHOWN THEREON IS THE PROPERTY OF HEATEC INC. AND THE USE OR COPIES THEREOF CANNOT BE MADE WITHOUT WRITTEN CONSENT.

C:\Heatec-Vault\Job Files\2011\038 THOMAS RUSSELL\11038 - GA GENERAL ARRNGT IDW.idw

NOTES:

1. FUEL TYPE: NATURAL GAS
2. MAXIMUM BURNER INPUT: 9.5 MMBTU/hr*
3. MINIMUM BURNER INPUT: 500,000 BTU/hr
4. AIR INLET PRESSURE: 28.7" W.C.*
5. INLET GAS PRESSURE @ RATIO REGULATOR: 55.4-110" W.C.
6. VOLTAGE: N/A
7. ACTUATOR IS SUPPLIED AND INSTALLED BY OTHERS, ECLIPSE IS TO PROVIDE BRACKET KIT FOR HONEYWELL ACTUATOR (MODEL M7284C-1000 OR SIMILAR).
8. UV SCANNER IS SUPPLIED AND INSTALLED BY OTHERS.
9. FOLLOWING ITEMS WILL BE SHIPPED LOOSE WITH THIS ORDER.
   a) SMJ10.202769_1-202AA32X BLOWER, SMJ, V1.0, CONFIGURED PRODUCT
   b) 302050-4 ORIFICE, METERING, 3 in. STRIPPED, 1.781 DIAMETER
   c) 302054 KIT, FLANGE, 3 in. 12fom
   d) 302053 KIT, FLANGE, 3/4 in. THRU 3 in. METERING ORIFICE
   e) 100205-22 IGNITER, SELF-GROUNDING, 590mm LONG, 1/2 in. NPT

* VALUES ARE BASED ON OPERATING CONDITION @70˚F & 2000 Feet ASL.

Per Heatec, Built for Nox= 40 ppm and CO= 50 ppm

Parts List			
ITEM	QTY	PART NUMBER	DESCRIPTION
10	1	PRJ10057834	Burner, Winnox 0850, Natural Gas, Horizontal Firing, L.H. Piping, 9 O'Clock Weld

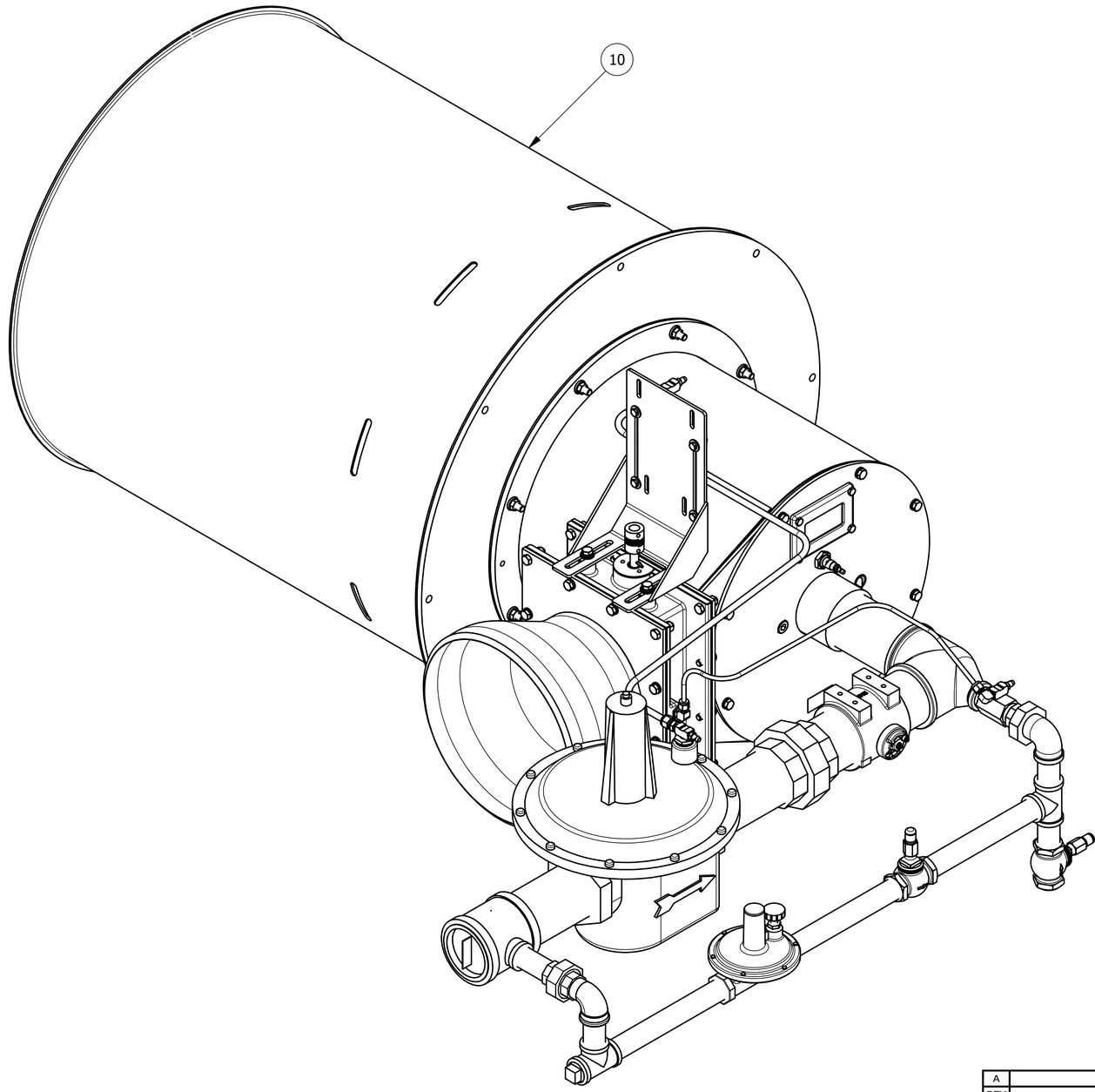

SHIPPING INFORMATION	
WEIGHT:	814 Lbs [370 Kg]
LENGTH:	1892 [74.5]
WIDTH:	1438 [56.6]
HEIGHT:	871 [34.3]

REV	DESCRIPTION	DATE	APPROVED
A	MOD106710	06/23/2011	DJV/HSK

REVISION HISTORY

THE INFORMATION HEREON IS THE PROPERTY OF ECLIPSE. WITHOUT WRITTEN PERMISSION ANY COPYING, TRANSMITTAL TO OTHERS, AND ANY USE EXCEPT THAT FOR WHICH IT IS LOANED, IS PROHIBITED.

ECLIPSE®

Burner, Winnox 0850, Natural Gas, Customer Level, Horizontal Firing, L.H. Piping

THIRD ANGLE PROJECTION

SIZE A1 | DWG NO PRJ10057833

SCALE: NONE | REF: PRJ10057667 | UNITS: mm[in] | SHEET 1 OF 2

HEATEC JOB #11-038-000

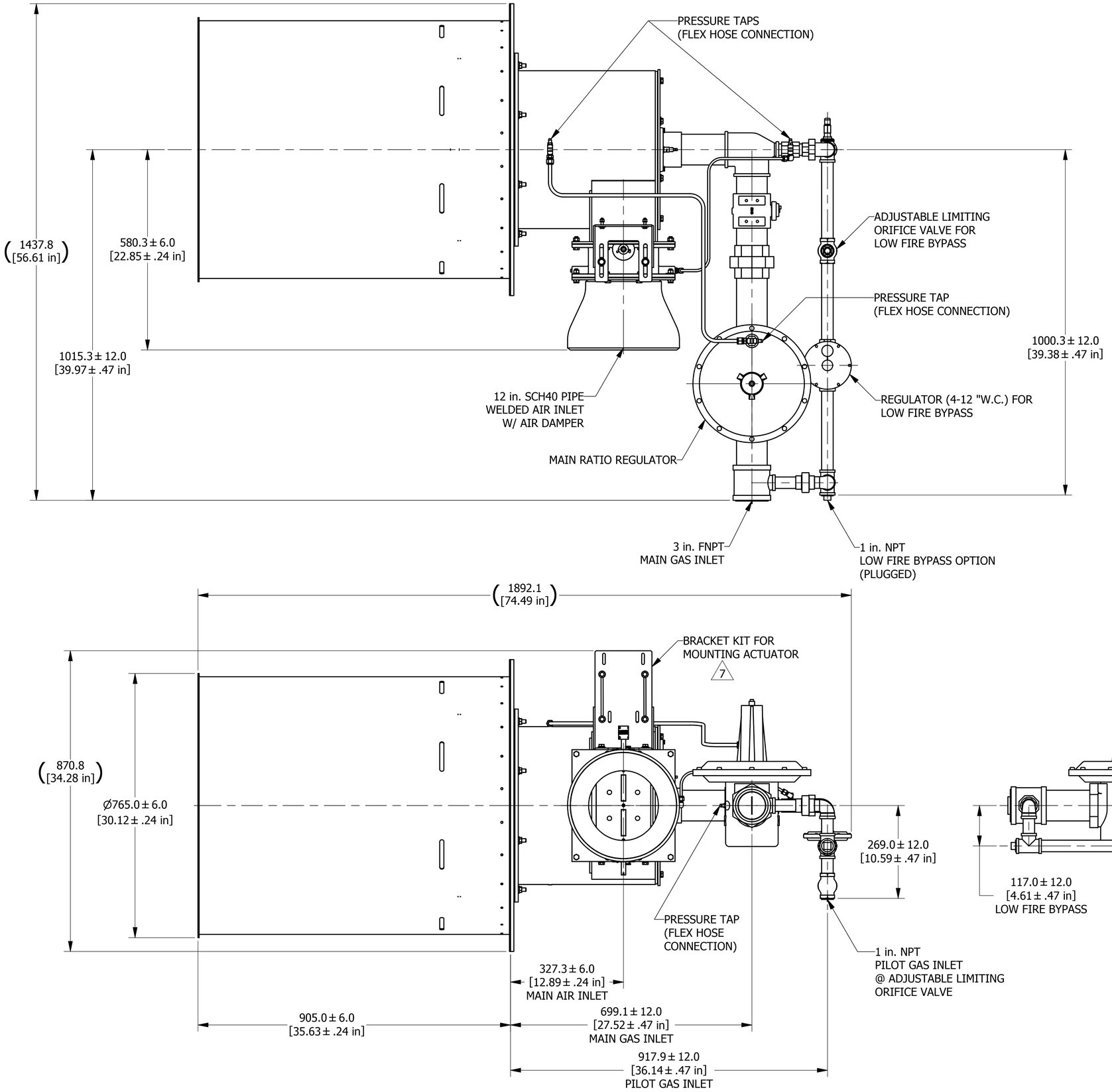

THE INFORMATION HEREON IS THE PROPERTY OF ECLIPSE. WITHOUT WRITTEN PERMISSION, ANY COPYING, TRANSMITTAL TO OTHERS, AND ANY USE EXCEPT THAT FOR WHICH IT IS LOANED, IS PROHIBITED.

SIZE	DWG NO	REV
A1	PRJ10057833	A

SCALE: NONE | UNITS: mm[in] | SHEET 2 OF 2

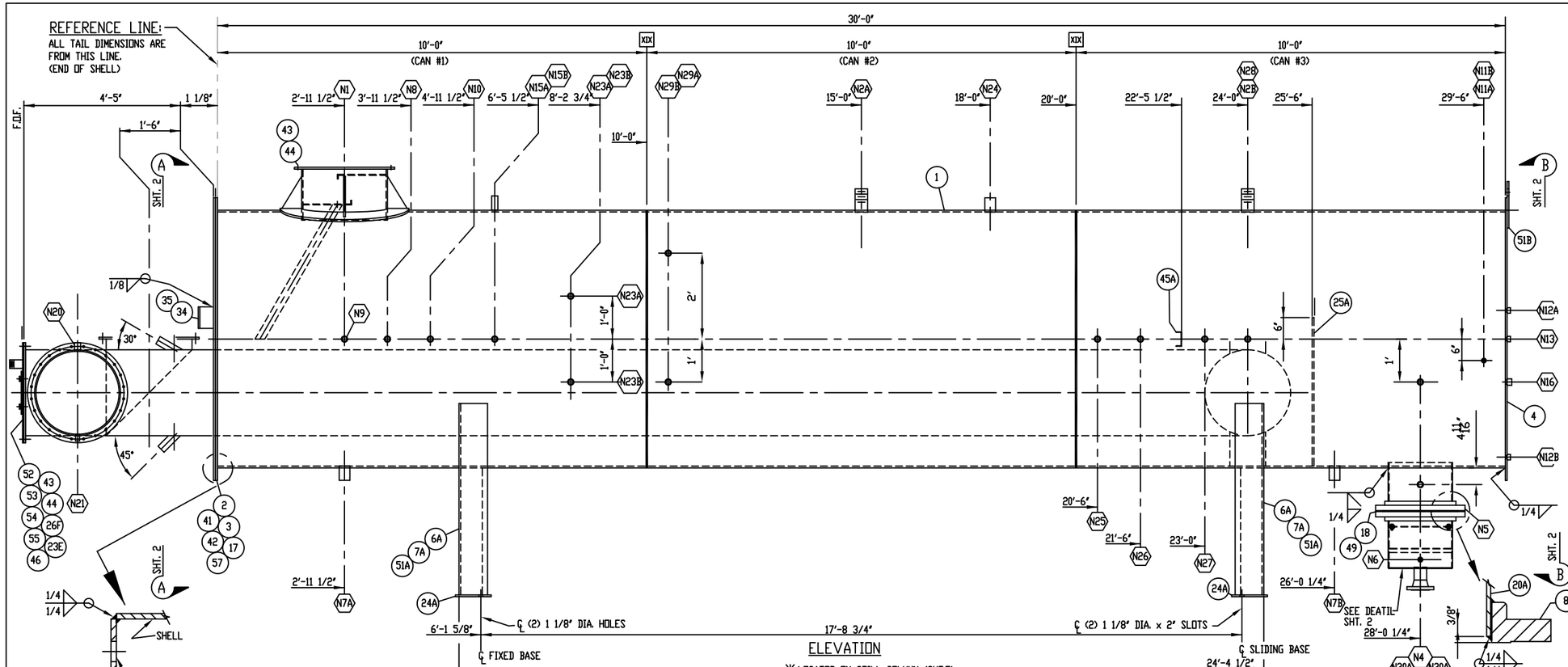

ELEVATION

✳ LOCATED ON STILL COLUMN (SHT.5)

MARK	QTY	SERVICE	SIZE	RATING	TYPE	BORE	MATERIAL	NECK SCH	NECK WALL	NECK LENGTH	NECK MATERIAL	REPAD THK	REPAD WIDTH	REPAD OD	REPAD MATERIAL	PROJECTION OUTSIDE	PROJECTION INSIDE	WELD DETAIL NUMBER	WELD SIZE A	WELD SIZE C	B.O.M. ITEM NO.
N30A/B	2	LSC	1"	3000#	XL CPLG	---	SA-105	---	---	4"	---	---	---	---	---	FLUSH	XIII	---	1/4	---	11
N29A/B	2	LG	3/4"	6000#	XL CPLG	---	SA-105	---	---	4"	---	---	---	---	---	FLUSH	XIII	---	1/4	---	12
N28	1	T.I.T.	1"	3000#	XL CPLG	---	SA-105	---	---	4"	---	---	---	---	---	FLUSH	XIII	---	1/4	---	11
N27	1	TEMP. CONT.	1"	3000#	XL CPLG	---	SA-105	---	---	4"	---	---	---	---	---	FLUSH	XIII	---	1/4	---	11
N26	1	TEMP. IND.	3/4"	6000#	XL CPLG	---	SA-105	---	---	4"	---	---	---	---	---	FLUSH	XIII	---	1/4	---	12
N25	1	TEMP. SAFETY HIGH	1"	3000#	XL CPLG	---	SA-105	---	---	4"	---	---	---	---	---	FLUSH	XIII	---	1/4	---	11
N24	1	RELIEF	2"	3000#	XL CPLG	---	SA-105	---	---	4"	---	---	---	---	---	FLUSH	XIII	---	1/4	---	10
N23A/B	2	LSL	1"	3000#	XL CPLG	---	SA-105	---	---	4"	---	---	---	---	---	FLUSH	XIII	---	1/4	---	11
N22	1	VAPOR INLET	2"	3000#	TOL	---	SA-105	---	---	---	---	---	---	---	---	---	XVI	---	1/4	---	50
N21	1	PILOT	1/2"	3000#	COUPLING	---	SA-105	---	---	---	---	---	---	---	---	FLUSH	XIII	---	1/4	---	16
N20	1	BURNER FEED	1 1/4"	3000#	COUPLING	---	SA-105	---	---	---	---	---	---	---	---	FLUSH	XIII	---	1/4	---	39
N19	1	COIL OUTLET ✳	2"	600#	RFWN	1.939"	SA-105	80	.218"	---	---	---	---	---	---	6"	---	I	IX	1/4	---	23C,37
N18	1	COIL INLET ✳	2"	600#	RFWN	1.939"	SA-105	80	.218"	---	---	---	---	---	---	6"	---	I	IX	1/4	---	23C,37
N17	1	T.I. ✳	1"	3000#	COUPLET	---	SA-105	---	---	---	---	---	---	---	---	---	---	XV	---	1/4	---	13
N16	1	GLYCOL RETURN	1"	3000#	COUPLET	---	SA-105	---	---	---	---	---	---	---	---	---	---	XV	---	1/4	---	13
N15A/B	2	LSH	1"	3000#	XL CPLG	---	SA-105	---	---	4"	---	---	---	---	---	---	---	FLUSH	XIII	---	1/4	---	11
N14	1	VAPOR OUTLET ✳	6"	150#	RFWN	---	SA-105	40	.280"	3.375"	---	---	---	---	---	6"	---	III	IX	1/4	---	40,33A
N13	1	SKIMMER	1/2"	6000#	COUPLET	---	SA-105	---	---	---	---	---	---	---	---	---	---	XV	---	1/4	---	14
N12A/B	2	LEVEL GAGE	1/2"	6000#	COUPLET	---	SA-105	---	---	---	---	---	---	---	---	---	---	XV	---	1/4	---	14
N11A/B	1	PREHEAT IN/OUT	1"	---	PIPE	.957"	SA-106-B	80	.179"	67 1/8"	SA-106-B	---	---	---	---	SEE VIEW B-B	---	I	---	1/8	---	22B
N10	1	SPARE	1"	3000#	XL CPLG	---	SA-105	---	---	4"	---	---	---	---	---	---	---	FLUSH	XIII	---	1/4	---	11
N9	1	SPARE	1"	3000#	XL CPLG	---	SA-105	---	---	4"	---	---	---	---	---	---	---	FLUSH	XIII	---	1/4	---	11
N8	1	SPARE	3/4"	6000#	XL CPLG	---	SA-105	---	---	4"	---	---	---	---	---	---	---	FLUSH	XIII	---	1/4	---	12
N7A/B	2	DRAIN	2"	3000#	XL CPLG	---	SA-105	---	---	4"	---	---	---	---	---	---	---	FLUSH	XIII	---	1/4	---	10
N6	1	STRIPING GAS INLET	1"	---	PIPE	.957"	SA-106-B	80	.179"	20 3/4"	SA-106-B	---	---	---	---	4"	---	I	---	1/8	---	22A
N5	1	STRIPING GAS BOOT	18"	150#	RFSO	---	SA-105	10	.25"	13 3/8"	SA-53-B	---	---	---	---	SEE VIEW B-B	---	X	III	1/4	---	8,18,20A,49
N4	1	GLYCOL OUTLET	3"	150#	RFWN	3.068"	SA-105	40	.216"	3 5/8"	SA-53-B	---	---	---	---	6"	---	III	IX	1/4	---	9,21B
N3	1	GLYCOL INLET ✳	3"	150#	RFWN	3.068"	SA-105	40	.216"	3 5/8"	SA-53-B	---	---	---	---	6"	---	III	IX	1/4	---	9,21B
N2A/B	2	FILL CONN.	3"	---	PIPE	2.9"	SA-53-B	40	.216"	4 3/4"	SA-53-B	---	---	---	---	4"	---	I	---	1/4	---	21A
N1	1	STILL COLUMN NECK	24"	---	PIPE	23.5"	SA-53-B	10	.25"	14.25"	SA-53-B	.5"	6"	36"	SA-36	SEE VIEW A-A	---	IV	---	1/4	1/4	5,19E,6B,6C,6D

SCHEDULE OF OPENINGS

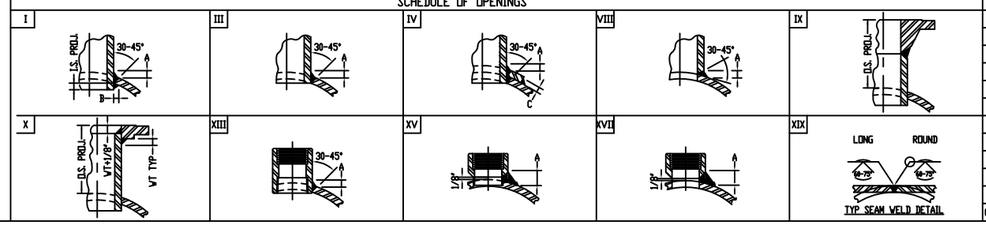

BILL OF MATERIALS

ITEM	QTY	DESCRIPTION	SPEC	PART NO.
1	1 EA	R&W CYLINDER, 72" O.D. x 1/2" THK. x 30'-0" LG P.B.E.	SA-36	2300615
2	1 EA	SHELL FLANGE RING, 79" O.D. x 72" I.D. x 1/2" THK. W/	SA-36	3900957
		(80) 11/16" DIA. HOLES ON 77" DIA. BOLT CIRCLE		
3	1 EA	COVER PLATE FLANGE, 79" O.D. x 1/2" THK. WITH	SA-36	3900958
		(80) 11/16" DIA. HOLES ON 77" DIA. BOLT CIRCLE		
4	1 EA	END PLATE FLANGE, 75" O.D. x 1/2" THK.	SA-36	3900959
5	7 EA	PLATE FLANGE, 28" O.D. x 24" I.D. x 1/2" THK. W/	SA-36	3900960
		(24) 9/16" DIA. HOLES ON A 26" DIA. BOLT CIRCLE		
6	6675 in²	PLATE, 1/2"	SA-36	2800230
7	18 LF	FLATBAR, 1/2" x 8"	SA-36	2900110
8	2 EA	FLANGE, 18" 150# RFSO	SA-105	1300224
9	2 EA	FLANGE, 3" 150# RFWN S/40 BORE	SA-105	1300083
10	3 EA	X-LONG COUPLING, 2" 3000# SCR'D x 4" LG.	SA-105	0800078
11	10 EA	X-LONG COUPLING, 1" 3000# SCR'D x 4" LG.	SA-105	0800042
12	3 EA	X-LONG COUPLING, 3/4" 6000# SCR'D x 4" LG.	SA-105	0800033
13	2 EA	COUPLET, 1" 3000# SCR'D	SA-105	0800044
14	3 EA	COUPLET, 1/2" 6000# SCR'D.	SA-105	0800018
15	5 EA	GSKT., 28" O.D. x 24" I.D. x 1/8" THK W/(24) 9/16"	NON-ASB.	1400324
		HOLES ON A 26" DIA. BOLT CIRCLE		
16	1 EA	COUPLING, 1/2" 6000# SCR'D. FULL	SA-105	0800015
17	1 EA	GSKT., 79" O.D. x 72" I.D. x 1/8" THK W/(80) 11/16"	NON-ASB.	1400325
		HOLES ON A 77" DIA. BOLT CIRCLE		
18	1 EA	GSKT., 18" 150# RF FLEX.	304 SS	1400015
19	92 LF	PIPE, 24" S/10 (.25" W.T.) ERW	SA-53-E/B	2200052
20	2.5 LF	PIPE, 18" S/10 (.25" W.T.) ERW	SA-53-E/B	2200044
21	1.4 LF	PIPE, 3" S/40 (.216" W.T.) SMLS.	SA-106-B	2300042
22	8.4 LF	PIPE, 1" S/80 (.179" W.T.) SMLS.	SA-106-B	2300018
23	48.5 LF	PIPE, 2" S/80 (.218" W.T.) SMLS.	SA-106-B	2300149
24	11.6 LF	FLATBAR, 1/2" x 10"	SA-36	2900790
25	2976 in²	PLATE, 3/8"	SA-36	2800229
26	2833 in²	PLATE, 1/4"	SA-36	2800227
27	10%	GRATING, 1" x 3/16" x 3'-0" WIDE x 20'-0" LG.	SA-36	3600068
28	36%	EXPANDED METAL, 3/4" , 9GA. FLAT x 48" x 96"	SA-36	3600051
29	8 EA	HEX NUT, 3/8" Z.P.	GR-5	0300002
30	8 EA	FLAT WASHER, 3/8"	P1	0300003
31	4 EA	HEX BOLT, 3/8" x 1 1/2" LG. Z.P.	GR-5	0300211
32	4 EA	HEX BOLT, 3/8" x 2 1/2" LG. Z.P.	GR-5	0300123
33	.5 LF	PIPE, 6" S/40 (.280" W.T.) SMLS	SA-106-B	2300058
34	1 EA	NAMEPLATE BRACKET, W8 x 28 x 6" LG. (HALF CUT)	SA-36	3900081
35	1 EA	NAMEPLATE, 3" x 5" x .064", 2-COLOR, REBOILER	S.STL.	3900169
36	17 CUFT.	PACKING, 1" PALL RINGS	S.STL.	3600043
37	2 EA	FLANGE, 2" 600# RFWN S/80 BORE	SA-105	1300052
38	19 EA	RETURN BEND, 2" S/80 180° S.R.	SA-234-WPB	1100028
39	1 EA	COUPLING, 1 1/4" 3000# SCR'D. FULL	SA-105	0800056
40	1 EA	FLANGE, 6" 150# RFWN S/40 BORE	SA-105	1300120
41	80 EA	CAPSCREW, 5/8" x 2" LG. Z.P.	GR-8	0300160
42	80 EA	HEX NUT, 5/8"	GR-8	0300020
43	120 EA	CAPSCREW, 1/2" x 1 3/4" LG. Z.P.	GR-5	0300081
44	120 EA	HEX NUT, 1/2" Z.P.	GR-5	0300010
45	5.9 LF	CHANNEL, 4" X 4.1#,	SA-36	2900203
46	1 EA	GSKT., 12" O.D. x 10" I.D. x 1/8" THK W/(4) 7/16"	NON-ASB.	1400345
		HOLES ON A 11" DIA. BOLT CIRCLE		
47	10 LF	FLATBAR, 1/4" x 6"	SA-36	2900085
48	1 EA	STILL COLUMN BLIND FLANGE, 28" O.D. x 1/2" THK. W/	SA-36	3900961
		(24) 9/16" DIA. HOLES ON A 26" DIA. BOLT CIRCLE		
49	16 EA	STUD, 1 1/8" x 6 1/4" LG W/NUTS	SA-193-B7 SA-193-B7	3000395
50	1 EA	THREDOLET, 2", 3000# 36-8 FS SCR,	SA-105	0800081
51	7 LF	FLATBAR, 1/2" x 6"	SA-36	2900109
52	1 EA	FIRETUBE BLIND FLANGE, 28" O.D. x 1/4" THK. W/	SA-36	3900398
		(24) 9/16" DIA. HOLES ON A 26" DIA. BOLT CIRCLE		
53	4 EA	HEX BOLT, 3/8" x 1 1/4" LG. Z.P.	GR-5	0300370
54	4 EA	WING NUT, 3/8" Z.P.	GR-5	0300369
55	4 EA	LOCK WASHER, 3/8" Z.P.	GR-5	0300368
56	1 EA	XXL COUPLING, 2" X 6" LG., 3000# FS SCR (FIRE EYE)	SA-105	0800079
57	160 EA	FLAT WASHER, 5/8"	304 SS	0300276

REVISION

A	8-11-11	RC	ISSUED FOR APPROVAL

NOTES

1. USE WELD PROCEDURE WPS-1A
2. ALL WELDS SHALL BE 1/4 CONT. FILLET WELDS UNLESS NOTED.
3. AIR TEST SHELL TO 5 PSIG.
4. AIR TEST FIRETUBE TO 5 PSIG.
5. PAINT: J.W.W. STANDARD
6. ALL BOLT THREADS TO FACE OUT FROM SHELL.
7. ALL NOZZLE REPADS SHALL HAVE AT LEAST ONE 7/16" DIA. WEEP HOLE THAT MAY BE TAPPED FOR 1/4" N.P.T.
8. ALL BOLT HOLES SHALL STRADDLE C'S.

NAMEPLATE DATA

GLYCOL REBOILER

SERIAL NUMBER
YEAR BUILT 2011
WEIGHT EMPTY, LBS. 24,000 LBS.
FIRETUBE RATING, BTU/HR 3.0MM
FIRETUBE AREA, SQ FT 314
SIZE 72 O.D. x 30'-0"
FULL CAP. = 5,142 GAL.

J.W. WILLIAMS INC. a FLINT Company — CASPER, WYOMING / WALLER, TEXAS

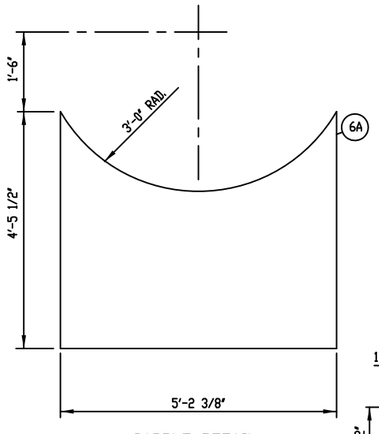

SADDLE DETAIL
(2) REQ'D.

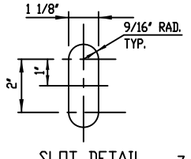

SLOT DETAIL

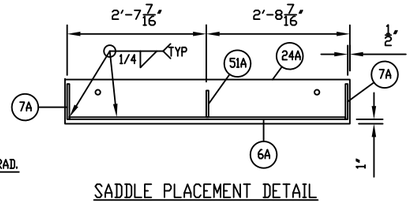

SADDLE PLACEMENT DETAIL
(1) REQ'D.

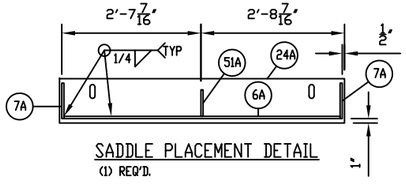

SADDLE PLACEMENT DETAIL
(1) REQ'D.

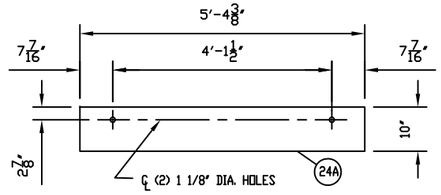

FIXED BASE DETAIL
(1) REQ'D.

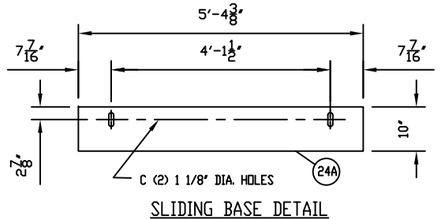

SLIDING BASE DETAIL
(1) REQ'D.

J.W. WILLIAMS INC. a FLINT Company
P.O. BOX 1178, WALLER, TEXAS 936-931-2424

FABRICATION & FIELD SERVICE

3.0MM BTU/HR REBOILER WITH STRIPPING GAS
72" O.D. x 30'-0"

QTY	DATE	JOB	DRAWN: RC	DATE: 8/11/11	DWG NO	REV
1	SEPT2011	27366	CHK: GF	DATE: 8/11/11	72-30-RB-SOUTH TEX	A
			SCALE: N.T.S.	SHEET: 1 OF 5		

THIS DRAWING IS PROPERTY OF J.W. WILLIAMS, INC. A FLINT COMPANY, AND IS NOT TO BE LOANED, COPIED OR REPRODUCED IN ANY WAY WITHOUT THE WRITTEN CONSENT OF J.W. WILLIAMS, INC.

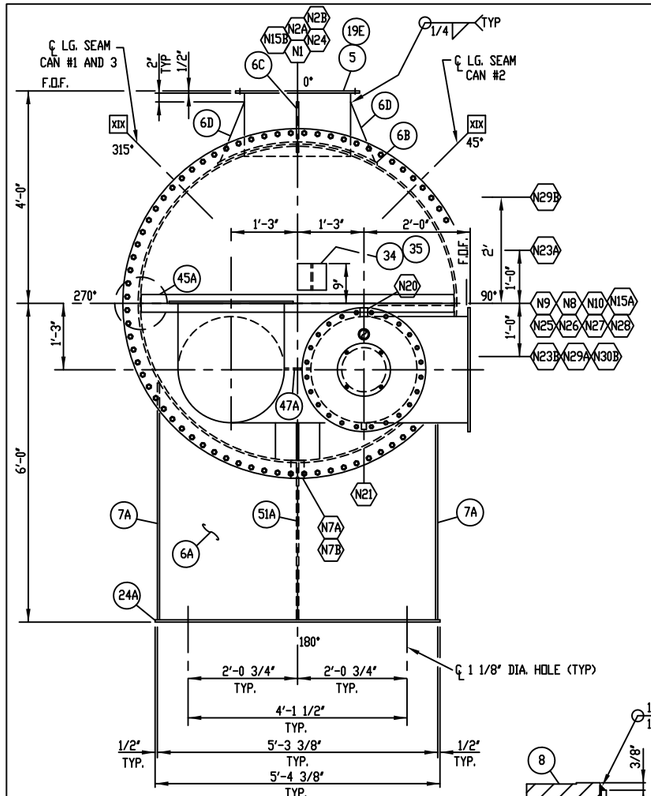

VIEW "A-A"
FROM SHT. 1

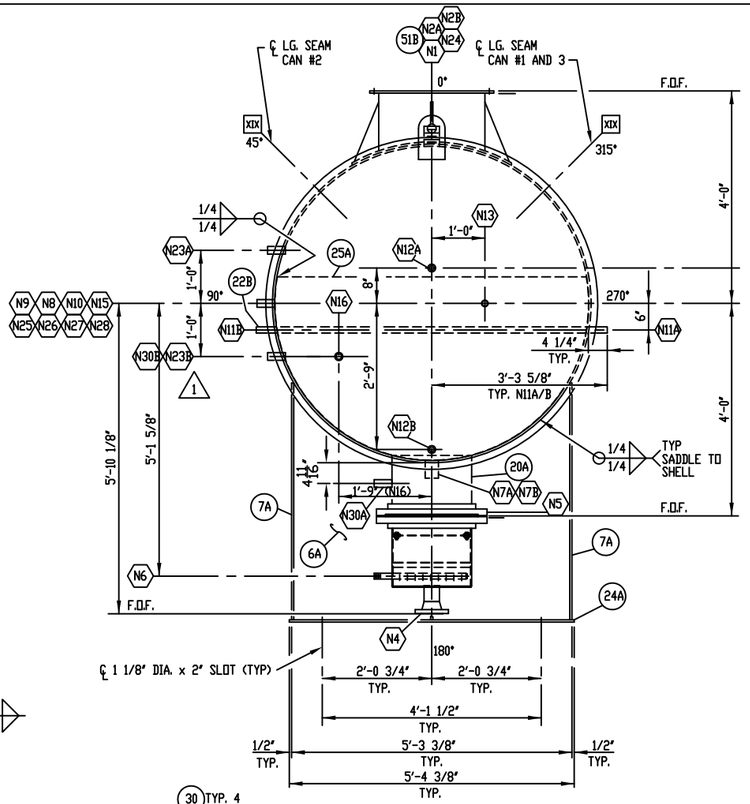

VIEW "B-B"
FROM SHT. 1

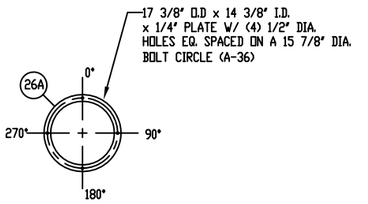

UPPER PACKING RETAINING RING

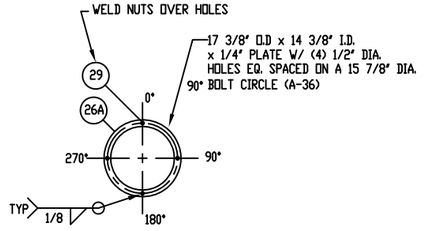

LOWER PACKING RETAINING RING

MATERIAL CUT LIST				
ITEM	QTY	SERVICE	DESCRIPTION	SPEC
6A	2	SADDLE	PLATE, 1/2" x 4'-5 1/2" x 5'-2 3/8" LG.	SA-36
6B	1	N1 PAD	PLATE, 1/2" x 3'-0" O.D. x 2'-0 1/8" I.D.	SA-36
6C	2	N1 GUSSET	PLATE, 1/2" x 5 1/2" x 9" LG.	SA-36
6D	2	N1 GUSSET	PLATE, 1/2" x 5 1/2" x 1'-1 1/2" LG.	SA-36
7A	4	SADDLE	FLATBAR, 1/2" x 8" x 4'-5 1/2" LG.	SA-36
19A	1	FIRETUBE	PIPE, 24" S/10 (.25" W.T.) x 29'-5 5/8" LG. P.B.E.	SA-53-E/B
19B	1	FIRETUBE	PIPE, 24" S/10 (.25" W.T.) x 4'-6" LG. P.B.E.	SA-53-E/B
19C	1	FIRETUBE	PIPE, 24" S/10 (.25" W.T.) x 27'-7 1/8" LG. P.B.E.	SA-53-E/B
19D	1	FIRETUBE	PIPE, 24" S/10 (.25" W.T.) x 2'-3" LG. P.B.E.	SA-53-E/B
19E	1	N1	PIPE, 24" S/10 (.25" W.T.) x 1'-2 1/4" LG. P.B.E.	SA-53-E/B
19F	1	STACK	PIPE, 24" S/10 (.25" W.T.) x 13'-11 1/2" LG. P.B.E.	SA-53-E/B
19G	1	STILL CLMN.	PIPE, 24" S/10 (.25" W.T.) x 9'-11" LG. P.B.E.	SA-53-E/B
19H	1	FIRETUBE	PIPE, 24" S/10 (.25" W.T.) x 1'-11 1/2" LG. P.B.E.	SA-53-E/B
20A	1	N5	PIPE, 18" S/10 (.25" W.T.) x 1'-1 3/8" LG. P.B.E.	SA-53-E/B
20B	1	N5	PIPE, 18" S/10 (.25" W.T.) x 1'-3 3/8" LG. P.B.E.	SA-53-E/B
21A	2	N2A/B	PIPE, 3" S/40 (.216" W.T.) x 4 3/4" LG. T.O.E., P.O.E.	SA-106-B
21B	2	N3,N4	PIPE, 3" S/40 (.216" W.T.) x 3 5/8" LG. B.O.E., P.O.E.	SA-106-B
22A	1	N6	PIPE, 1" S/80 (.179" W.T.) x 1'-8 3/4" LG. T.O.E., P.O.E.	SA-106-B
22B	1	N11A/B	PIPE, 1" S/80 (.179" W.T.) x 6'-7 5/16" LG. T.B.E.	SA-106-B
23A	1	STILL CLMN.	PIPE, 2" S/80 (.218" W.T.) x 3'-7 5/16" LG. P.B.E.	SA-106-B
23B	1	IGNITOR	PIPE, 2" S/80 (.218" W.T.) x 6 3/8" LG. T.O.E., P.O.E.	SA-106-B
23C	2	REFLUX COIL	PIPE, 2" S/80 (.218" W.T.) x 3'-10 15/16" LG. B.B.E.	SA-106-B
23D	18	REFLUX COIL	PIPE, 2" S/80 (.218" W.T.) x 2'-0" LG. B.B.E.	SA-106-B
23E	1	PEEP SIGHT	PIPE, 2" S/80 (.218" W.T.) x 4" LG. T.O.E.x P.O.E.	SA-106-B
24A	1	BASE	FLATBAR, 1/2" x 10" x 5'-4 3/8" LG.	SA-36
24B	1	FIRETUBE SUPPORT	FLATBAR, 1/2" x 10" x 9 1/2" LG.	SA-36
24C	1	BASE	FLATBAR, 1/2" x 10" x 5'-4 3/8" LG.	SA-36
25A	1	WEIR	PLATE, 3/8" x 3'-5 11/16" x 5'-11 3/8"	SA-36
26A	2	BOOT RING	PLATE, 1/4" x 1'-5 3/8" O.D. x 1'-2 3/8" I.D.	SA-36
26B	2	STILL CLMN.	PLATE, 1/4" x 1'-11 3/8" x 1'-2 7/16"	SA-36
26C	2	STILL CLMN. RING	PLATE, 1/4" x 1'-11 3/8" O.D. x 1'-8 3/8" I.D.	SA-36
26D	1	N6	PLATE, 1/4" x 1 1/4" DIA.	SA-36
26E	1	BOOT	PLATE, 1/4" x 1'-5 3/4" O.D. x 3 5/8" I.D.	SA-36
26F	1	FIRETUBE BLIND FLG.	PLATE, 1/4" x 12" O.D.	SA-36
27A	1	STRIP GAS BOOT	GRATING, 1" x 3/16" x 1'-5 3/8" O.D.	SA-36
27B	2	STILL CLMN.	GRATING, 1" x 3/16" x 1'-11 3/8" O.D.	SA-36
28A	2	STRIP GAS BOOT	EXPANDED METAL, 3/4" 9GA, FLAT x 1'-5 1/4" O.D.	SA-36
28B	2	STILL CLMN.	EXPANDED METAL, 3/4" 9GA, FLAT x 1'-11 1/4" O.D.	SA-36
33A	1	N14	PIPE, 6" S/40 (.280" W.T.) x 3 3/8" LG. SMLS B.O.E. x P.O.E.	
45A	1	FIRETUBE SUPPORT	CHANNEL, 4" X 5.4#, X 70-0 3/4" LG.	SA-36
47A	1	FIRETUBE	FLATBAR, 6" x 1/4" x 10'-0" LG.	SA-36
51A	2	SADDLE	FLATBAR, 1/2" x 6" x 2'-11 1/2" LG.	SA-36
51B	1	LIFT LUG	FLATBAR, 1/2" x 6" x 1'-1" LG.	SA-36

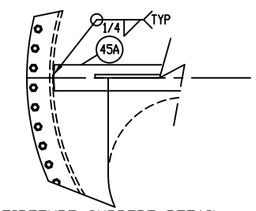

FIRETUBE SUPPORT DETAIL

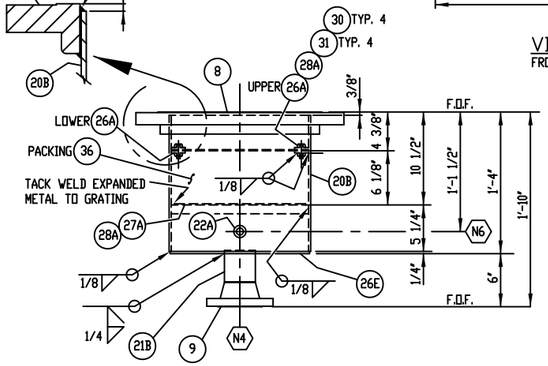

STRIPING GAS BOOT DETAIL
N.T.S.

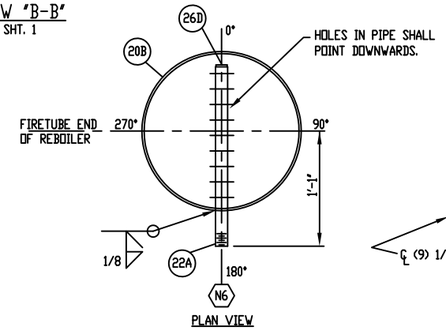

SPARGER ORIENTATION DETAIL
N.T.S.

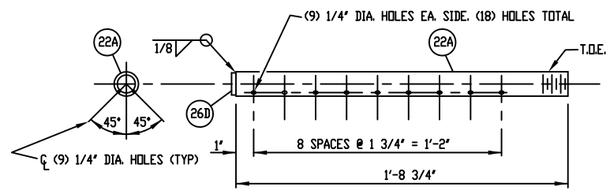

SPARGER PIPE DETAIL
N.T.S.

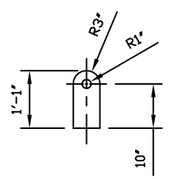

LIFT LUG DETAIL

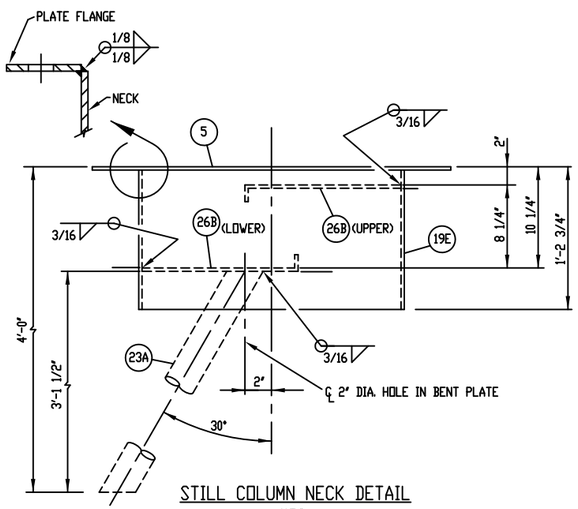

STILL COLUMN NECK DETAIL
N.T.S.

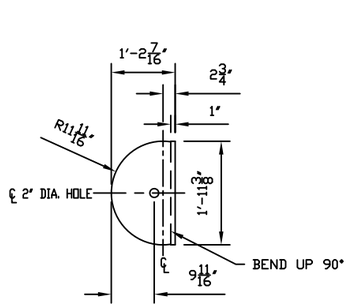

DETAIL ITEM 26B (LOWER)

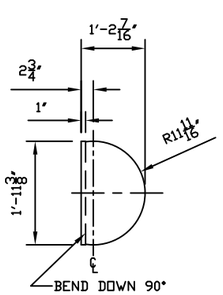

DETAIL ITEM 26B (UPPER)

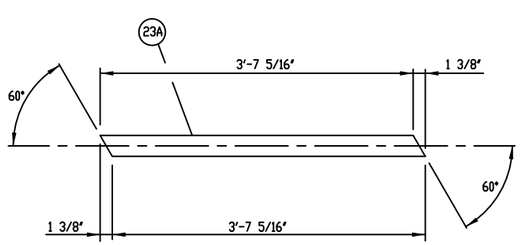

DETAIL ITEM 23A
N.T.S.

REVISION			
REV	DATE	BY	DESCRIPTION
A	8-10-11	RC	ISSUED FOR APPROVAL

J.W. WILLIAMS INC. a FLINT Company
P.O. BOX 1178
WALLER, TEXAS
936-931-2424

FABRICATION & FIELD SERVICE

3.0MM BTU/HR REBOILER WITH STRIPPING GAS
72" O.D. x 30'-0"

			DRAWN: RC	DATE: 8/11/11	DWG NO	REV
1	SEPT2011	27366	CHK: GF	DATE: 8/11/11	72-30-RB-SOUTH TEX	A
QTY	DATE	JOB	SCALE: N.T.S.	SHEET: 2 OF 5		

THIS DRAWING IS PROPERTY OF J.W. WILLIAMS, INC. A FLINT COMPANY, AND IS NOT TO BE LOANED, COPIED OR REPRODUCED IN ANY WAY WITHOUT THE WRITTEN CONSENT OF J.W. WILLIAMS, INC.

THOMAS RUSSELL CO.

Tulsa, Oklahoma

JOB NO:	250	DATE:	9/21/2010
CLIENT:	TRCo.	BY:	JRG
SUBJECT:	200 MMscfd Cryo Plant		

FIRED HEATER

Service:	HMO Heater for E-207	Tag No:	H-781
Design Duty, MBTU/Hr	17,400	Type:	Helical Coil
No. of Coils per Unit	One	No. Units: One	Model: HCI-10010-40(D)-G

Fluid		50:50 TEG - Water	
		Inlet	Outlet
Liquids	Lbs/Hr	333,142	333,142
Density	Lbs/CuFt	64.15	62.56
Molecular Weight		32.17	32.17
Specific Heat	BTU/Lb °F	0.859	0.882
Thermal Cond.	BTU/Hr-Ft-°F	0.223	0.220
Viscosity	cP	1.186	0.831
Vapor	Lbs/Hr	0	0
Density	Lbs/CuFt		
Molecular Weight			
Specific Heat	BTU/Lb °F		
Thermal Cond.	BTU/HrFt °F		
Viscosity	cP		
Operating Temp.	°F	195	255
Operating Pressure	PSIA	90	
Velocity	Ft/Sec		8 Calc.
Pressure Drop	PSI	20 Allow.	17 Calc.
Fouling Resistance	SqFt*F/BTU	0.0020	
Design Press. / Temp.		150 PSIG	400 °F
Min. Design Mtl. Temp.		-20 °F @	150 PSIG
Corrosion Allowance		0.125	
Insulation Thickness		3-5" high temp ceramic fiber	
Efficiency-Based on LHV	(%)	82.0%	(Assume 3% Loss)
Excess Air		15	
Firebox Unit Heat Release		28,834	BTU/Hr- Ft^3
Number of Passes		Two - Process, Two - Fireside	

Burners		Gas	Oil
LHV	(BTU/scf)	973	
Mol. Wt.		18.26	
Gravity			
Pressure Avail.	(psig)	100	
Pressure Req'd	(psig)		
Steam for Atomizing			
Fuel Gas Req'd (MSCFD)		539.10	N/A
Mfgr:		Eclipse Ratiomatic	
Type:		Forced Draft - 40 HP Blower	
Number Req'd		One	
Pilots Req'd	(Note 4)	Yes, electrical ignition	
NOx		< 75 ppmvd	

Structural Design	
Wind Load, MPH, (3)	
Seismic Zone, (3)	
Ambient, °F	-20 / 110
Elevation, Ft	1300

Stack Design	
Self-supporting	Yes
Minimum Height	8 ft above top of heater
Minimum Wall Thickness:	0.125
Lining Type	No
Lining Thickness:	No
Damper:	No

Coil Design		Radiant	Convection-Bare	Convection-Finned	
Gas Temperature	In/Out	195 / 255			
Number Tubes		Two			
Tube O.D.	In	4" Sch 40		Inlet and Outlet	8" 300# RFWN
Tube Length	Eff. Ft	-----			
Bare Surface	Sq Ft	1,453			
Finned Surface	Sq Ft	N/A			
Avg. Heat Flux	BTU/Hr-Sq Ft	15,235			
Tube Materials		SA- 106 Gr. B	SA-	SA-	

Convection Fins (inch):	Height:	Thickness:	No. / inch:	Material:	
Overall Dimension:	25.9' L x 9.2' W x 10' H (Less Stack)			30,000 lbs Dry Weight	
Code Requirements:	ASME VIII Div I		Stamp: Yes	Nat'l Board:	Yes

Notes:

1) Add 10% to duty and flow rates for design.
2) See attached Scope of Supply.
△ 3) Wind design per ASCE 7-10, Exposure C, CATIII. Seismic design per ASCE 7-10, I=1.25, Site D. , S_S =40% , S_1 =8%
4) Add Spare ignitor

REVISION	3	△ 4	1	2
ENGINEER/DATE	JRG 1/11/11	MTR 9/20/11	GER 11/22/10	JRG 1/10/11
ISSUED FOR	Revised - Purchase	Revised	Revised	Revised

HEATER DESIGN DATA

INPUT: 26,318,977 BTU/HR

OUTPUT: 19,161,995 BTU/HR

FLOW RATE: 712 GPM

TRANSFER MEDIA: 50/50 TEG/WATER

HEATING SURFACE:1,453 SQFT

DESIGN: 150 PSIG @ 400 DEG F

ASME CODE: SECT VIII, DIV. 1 2010 EDITION w/ NO ADDENDA

OUTLET MEDIA TEMPERATURE: 255 DEG F

LIQUID FILL:812 GALLONS

PRESSURE DROP: 20 PSIG

APPROX. SHIPPING WEIGHT:

HEATER DRY WT: 33,000 LBS
HEATER OPER. WT: 41,000 LBS

PUMP/TANK SKID DRY WT: 9,110 LBS
PUMP/TANK SKID OPER. WT: 17,000 LBS

TOTAL OPER. WEIGHT OF HEATER/PUMP SKID: 58,000 LBS

	HEATEC ORDER INFO	HEATEC ORDER INFO	HEATEC ORDER INFO
	W.O.# 11-077-151	W.O.# 11-127-151	W.O.# 11-143-151
	JOB# HI 11-077	JOB# HI 11-127	JOB# HI 11-143
	ISSUE DATE:	ISSUE DATE:	ISSUE DATE:
	CODE: ☐ YES ☐ NO	CODE: ☐ YES ☐ NO	CODE: ☐ YES ☐ NO

HEATEC ORDER INFO	HEATEC ORDER INFO	HEATEC ORDER INFO	HEATEC ORDER INFO
W.O.# 11-041-151	W.O.# 11-095-151	W.O.# 11-129-151	W.O.# 11-145-151
JOB# HI 11-041	JOB# HI 11-095	JOB# HI 11-129	JOB# HI 11-145
ISSUE DATE:	ISSUE DATE:	ISSUE DATE:	ISSUE DATE:
CODE: ☐ YES ☐ NO	CODE: ☐ YES ☐ NO	CODE: ☐ YES ☐ NO	CODE: ☐ YES ☐ NO

	THOMAS RUSSELL CO. PO. 251-76 PROJECT NAME: TRCO JOB NUMBER: TRJ 251 TAG NUMBER: H-781 HMO HEATER HEATEC JOB NUMBER: HI 11-077	THOMAS RUSSELL CO. PO. 257-76 PROJECT NAME: TRCO JOB NUMBER: TRJ 257 TAG NUMBER: H-781 HMO HEATER HEATEC JOB NUMBER: HI 11-127	THOMAS RUSSELL CO. PO. 262-76 PROJECT NAME: TRCO JOB NUMBER: TRJ 262 TAG NUMBER: H-781 HMO HEATER HEATEC JOB NUMBER: HI 11-143
THOMAS RUSSELL CO. PO. 250-76 PROJECT NAME: TRCO JOB NUMBER: TRJ 250 TAG NUMBER: H-781 HMO HEATER HEATEC JOB NUMBER: HI 11-041	THOMAS RUSSELL CO. PO. 252-76 PROJECT NAME: TRCO JOB NUMBER: TRJ 252 TAG NUMBER: H-781 HMO HEATER HEATEC JOB NUMBER: HI 11-095	THOMAS RUSSELL CO. PO. 260-76 PROJECT NAME: TRCO JOB NUMBER: TRJ 260 TAG NUMBER: H-781 HMO HEATER HEATEC JOB NUMBER: HI 11-129	THOMAS RUSSELL CO. PO. 259-76 PROJECT NAME: TRCO JOB NUMBER: TRJ 259 TAG NUMBER: H-781 HMO HEATER HEATEC JOB NUMBER: HI 11-145

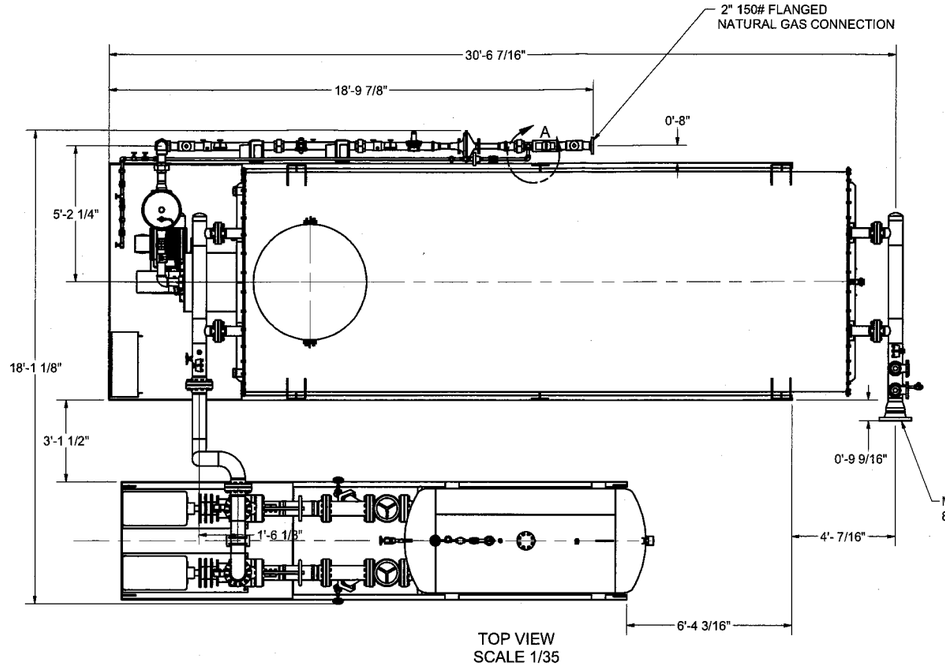

TOP VIEW
SCALE 1/35

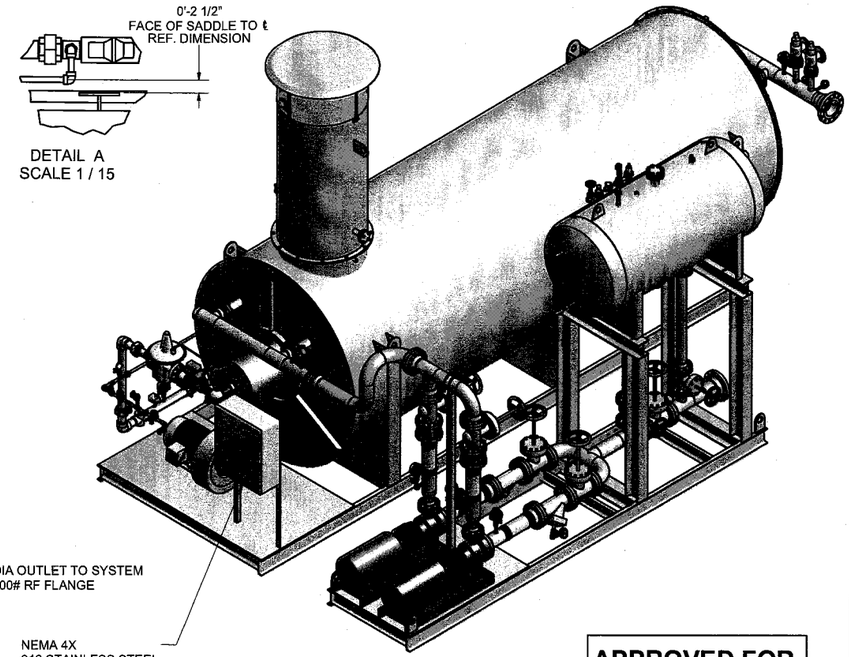

DETAIL A
SCALE 1 / 15

APPROVED FOR CONSTRUCTION

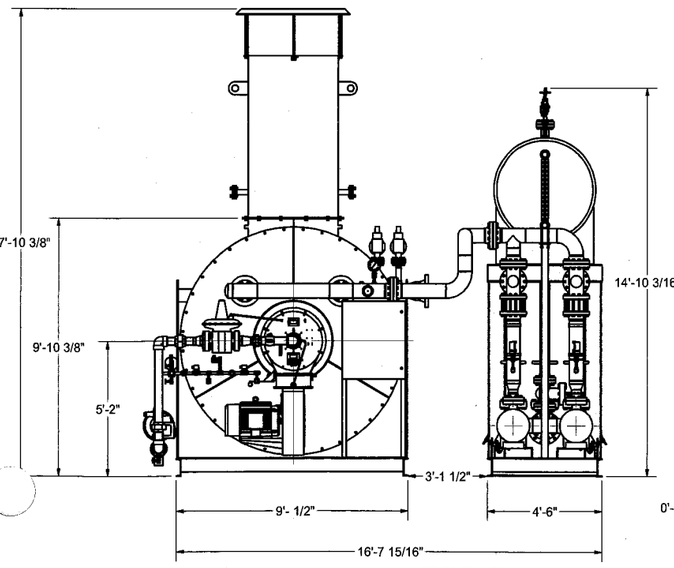

FRONT VIEW
SCALE 1/35

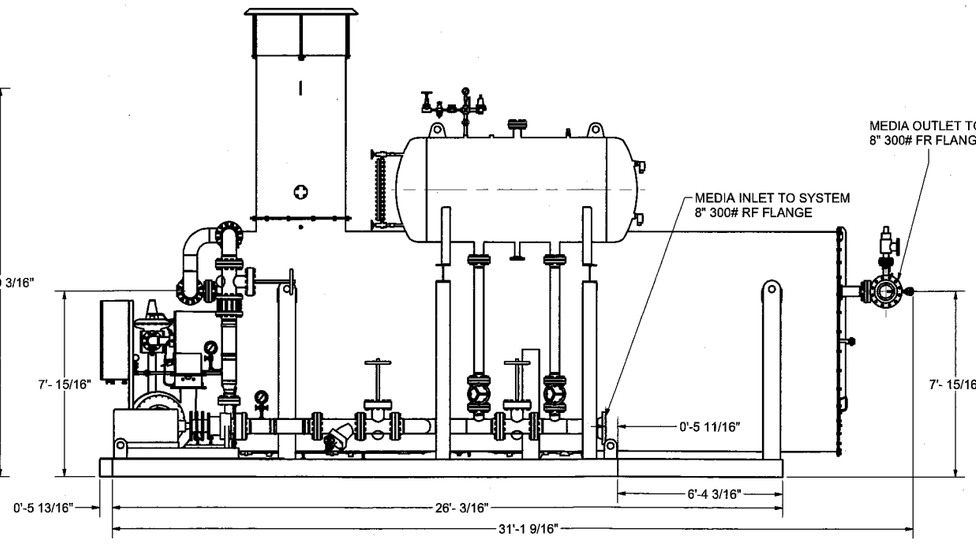

RIGHT SIDE VIEW
SCALE 1/35

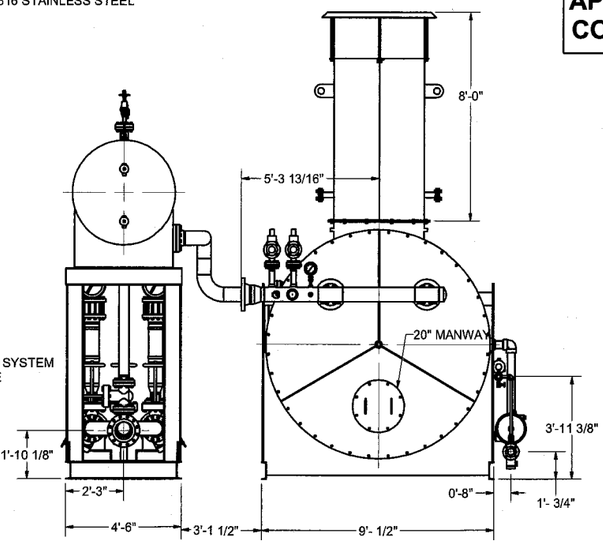

REAR VIEW
SCALE 1/35

CUSTOMER: THOMAS RUSSEL		JOB#: SEE TAGS
DRAWING NAME: GENERAL ARRANGEMENT HCI 10010-40-D-G		WO#: SEE TAGS ISSUE DATE:
HEATEC INC. an Aztec company	P.O. BOX 72760 CHATTANOOGA, TN 37407	PHONE: (423) 821-5200 FAX: (423) 821-7673
DWG. DATE: 06/11/11 TMM	CHK DATE:	APPR. DATE:
DWG./PART#: 11077-GA	REV.: 0	SCALE: NA WEIGHT: NOTED
TOLERENCE IS +/- 1/4" UNLESS OTHERWISE NOTED.	THIS DRAWING AND THE DESIGN SHOWN THEREIN IS THE PROPERTY OF HEATEC INC. AND THE USE OR COPIES THEREOF CANNOT BE MADE WITHOUT WRITTEN CONSENT.	

C:\HEATEC-VAULT\Job Files\2011\077 THOMAS RUSSEL\11077-GA GENERAL ARRANGEMENT.idw

NOTES:

1. FUEL TYPE: NATURAL GAS
2. MAXIMUM BURNER INPUT: 26.5 MMBTU/hr
3. MINIMUM BURNER INPUT: 260,000 BTU/hr
4. AIR INLET PRESSURE: 22.0 " W.C.
5. MAIN GAS INLET MAX DESIGN PRESSURE: 5.0 PSI MAX.
6. VOLTAGE: 230V/460V/3Ph/60Hz

Per Heatec, Buit for Nox 75 ppm, CO 100 ppm

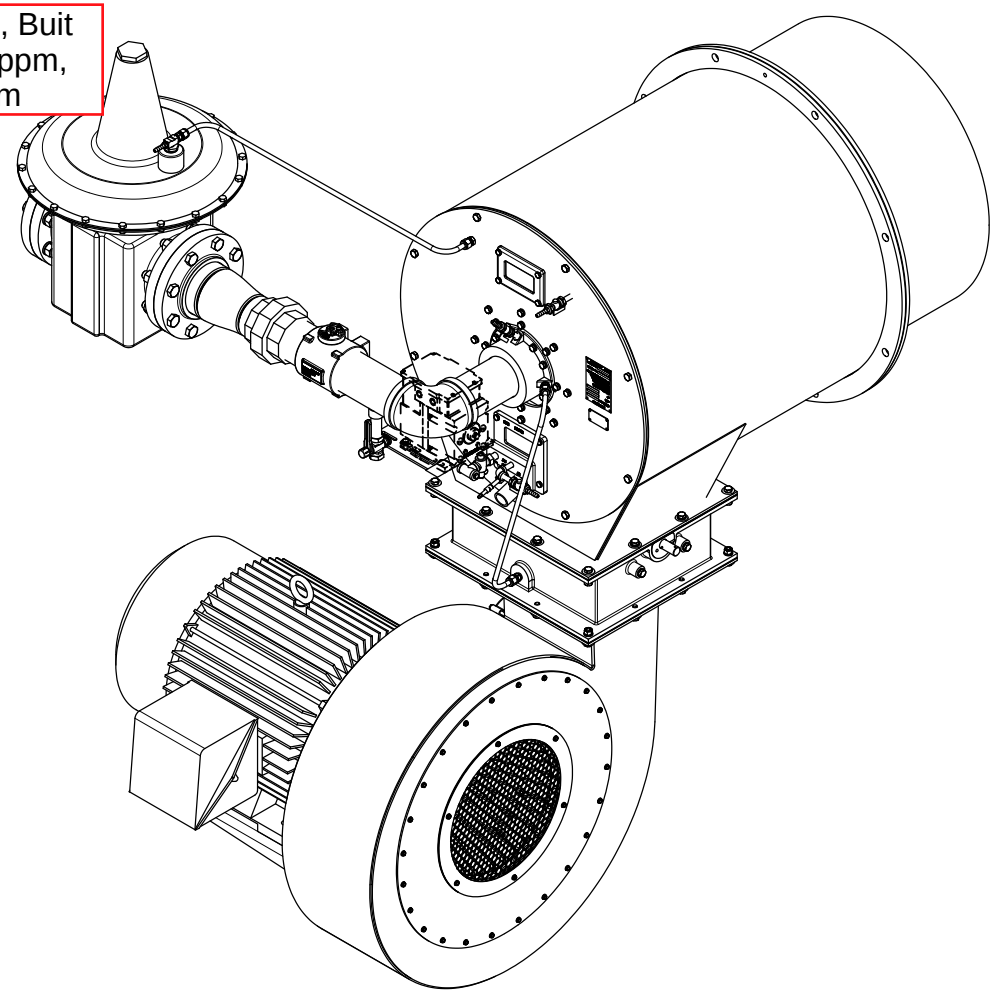

Parts List

ITEM	QTY	PART NUMBER	DESCRIPTION
10	1	PRJ10056395	Burner, Ratiomatic, RM3000, Natural Gas, Horizontal Firing, Inverted Left Hand B

SHIPPING INFORMATION	
WEIGHT:	440 Kg [968 Lbs]
LENGTH:	1570 mm [61.8 in]
WIDTH:	1456 mm [57.3 in]
HEIGHT:	1809 mm [71.2 in]

REV	DESCRIPTION	DATE	APPROVED
A	MOD106469	04/04/2011	CS/HSK

REVISION HISTORY

THE INFORMATION HEREON IS THE PROPERTY OF ECLIPSE. WITHOUT WRITTEN PERMISSION ANY COPYING, TRANSMITTAL TO OTHERS, AND ANY USE EXCEPT THAT FOR WHICH IT IS LOANED, IS PROHIBITED.

ECLIPSE®

Burner, Ratiomatic, RM3000, Customer Level, Natural Gas, Horizontal Firing, Inve

THIRD ANGLE PROJECTION

SIZE A1 | DWG NO PRJ10056396

SCALE: NONE | REF: PRJ10055865 | UNITS: mm[in] | SHEET 1 OF 2

ELECTRONIC CODE OF FEDERAL REGULATIONS

e-CFR data is current as of August 23, 2017

Title 40: Protection of Environment
PART 98—MANDATORY GREENHOUSE GAS REPORTING
Subpart C—General Stationary Fuel Combustion Sources

Table C-1 to Subpart C of Part 98—Default CO_2 Emission Factors and High Heat Values for Various Types of Fuel

Link to an amendment published at 81 FR 89252, Dec. 9, 2016.

Default CO_2 Emission Factors and High Heat Values for Various Types of Fuel

Fuel type	Default high heat value	Default CO_2 emission factor
Coal and coke	mmBtu/short ton	kg CO_2/mmBtu
Anthracite	25.09	103.69
Bituminous	24.93	93.28
Subbituminous	17.25	97.17
Lignite	14.21	97.72
Coal Coke	24.80	113.67
Mixed (Commercial sector)	21.39	94.27
Mixed (Industrial coking)	26.28	93.90
Mixed (Industrial sector)	22.35	94.67
Mixed (Electric Power sector)	19.73	95.52
Natural gas	mmBtu/scf	kg CO_2/mmBtu
(Weighted U.S. Average)	1.026×10^{-3}	53.06
Petroleum products	mmBtu/gallon	kg CO_2/mmBtu
Distillate Fuel Oil No. 1	0.139	73.25
Distillate Fuel Oil No. 2	0.138	73.96
Distillate Fuel Oil No. 4	0.146	75.04
Residual Fuel Oil No. 5	0.140	72.93
Residual Fuel Oil No. 6	0.150	75.10
Used Oil	0.138	74.00
Kerosene	0.135	75.20
Liquefied petroleum gases (LPG)[1]	0.092	61.71
Propane[1]	0.091	62.87
Propylene[2]	0.091	67.77
Ethane[1]	0.068	59.60
Ethanol	0.084	68.44
Ethylene[2]	0.058	65.96
Isobutane[1]	0.099	64.94
Isobutylene[1]	0.103	68.86
Butane[1]	0.103	64.77
Butylene[1]	0.105	68.72
Naphtha (<401 deg F)	0.125	68.02
Natural Gasoline	0.110	66.88
Other Oil (>401 deg F)	0.139	76.22
Pentanes Plus	0.110	70.02
Petrochemical Feedstocks	0.125	71.02
Petroleum Coke	0.143	102.41
Special Naphtha	0.125	72.34
Unfinished Oils	0.139	74.54
Heavy Gas Oils	0.148	74.92
Lubricants	0.144	74.27
Motor Gasoline	0.125	70.22
Aviation Gasoline	0.120	69.25
Kerosene-Type Jet Fuel	0.135	72.22
Asphalt and Road Oil	0.158	75.36
Crude Oil	0.138	74.54
Other fuels—solid	mmBtu/short ton	kg CO_2/mmBtu
Municipal Solid Waste	9.95[3]	90.7
Tires	28.00	85.97
Plastics	38.00	75.00

Petroleum Coke	30.00	102.41
Other fuels—gaseous	mmBtu/scf	kg CO_2/mmBtu
Blast Furnace Gas	0.092×10^{-3}	274.32
Coke Oven Gas	0.599×10^{-3}	46.85
Propane Gas	2.516×10^{-3}	61.46
Fuel Gas[4]	1.388×10^{-3}	59.00
Biomass fuels—solid	mmBtu/short ton	kg CO_2/mmBtu
Wood and Wood Residuals (dry basis)[5]	17.48	93.80
Agricultural Byproducts	8.25	118.17
Peat	8.00	111.84
Solid Byproducts	10.39	105.51
Biomass fuels—gaseous	mmBtu/scf	kg CO_2/mmBtu
Landfill Gas	0.485×10^{-3}	52.07
Other Biomass Gases	0.655×10^{-3}	52.07
Biomass Fuels—Liquid	mmBtu/gallon	kg CO_2/mmBtu
Ethanol	0.084	68.44
Biodiesel (100%)	0.128	73.84
Rendered Animal Fat	0.125	71.06
Vegetable Oil	0.120	81.55

[1]The HHV for components of LPG determined at 60 °F and saturation pressure with the exception of ethylene.

[2]Ethylene HHV determined at 41 °F (5 °C) and saturation pressure.

[3]Use of this default HHV is allowed only for: (a) Units that combust MSW, do not generate steam, and are allowed to use Tier 1; (b) units that derive no more than 10 percent of their annual heat input from MSW and/or tires; and (c) small batch incinerators that combust no more than 1,000 tons of MSW per year.

[4]Reporters subject to subpart X of this part that are complying with §98.243(d) or subpart Y of this part may only use the default HHV and the default CO_2 emission factor for fuel gas combustion under the conditions prescribed in §98.243(d)(2)(i) and (d)(2)(ii) and §98.252(a)(1) and (a)(2), respectively. Otherwise, reporters subject to subpart X or subpart Y shall use either Tier 3 (Equation C-5) or Tier 4.

[5]Use the following formula to calculate a wet basis HHV for use in Equation C-1: $HHV_w = ((100 - M)/100)*HHV_d$ where HHV_w = wet basis HHV, M = moisture content (percent) and HHV_d = dry basis HHV from Table C-1.

[78 FR 71950, Nov. 29, 2013]

Need assistance?

ELECTRONIC CODE OF FEDERAL REGULATIONS

e-CFR data is current as of August 23, 2017

Title 40: Protection of Environment
PART 98—MANDATORY GREENHOUSE GAS REPORTING
Subpart C—General Stationary Fuel Combustion Sources

TABLE C-2 TO SUBPART C OF PART 98—DEFAULT CH_4 AND N_2O EMISSION FACTORS FOR VARIOUS TYPES OF FUEL

Link to an amendment published at 81 FR 89252, Dec. 9, 2016.

Fuel type	Default CH_4 emission factor (kg CH_4/mmBtu)	Default N_2O emission factor (kg N_2O/mmBtu)
Coal and Coke (All fuel types in Table C-1)	1.1×10^{-02}	1.6×10^{-03}
Natural Gas	1.0×10^{-03}	1.0×10^{-04}
Petroleum (All fuel types in Table C-1)	3.0×10^{-03}	6.0×10^{-04}
Fuel Gas	3.0×10^{-03}	6.0×10^{-04}
Municipal Solid Waste	3.2×10^{-02}	4.2×10^{-03}
Tires	3.2×10^{-02}	4.2×10^{-03}
Blast Furnace Gas	2.2×10^{-05}	1.0×10^{-04}
Coke Oven Gas	4.8×10^{-04}	1.0×10^{-04}
Biomass Fuels—Solid (All fuel types in Table C-1, except wood and wood residuals)	3.2×10^{-02}	4.2×10^{-03}
Wood and wood residuals	7.2×10^{-03}	3.6×10^{-03}
Biomass Fuels—Gaseous (All fuel types in Table C-1)	3.2×10^{-03}	6.3×10^{-04}
Biomass Fuels—Liquid (All fuel types in Table C-1)	1.1×10^{-03}	1.1×10^{-04}

Note: Those employing this table are assumed to fall under the IPCC definitions of the “Energy Industry” or “Manufacturing Industries and Construction”. In all fuels except for coal the values for these two categories are identical. For coal combustion, those who fall within the IPCC “Energy Industry” category may employ a value of 1g of CH_4/mmBtu.

[78 FR 71952, Nov. 29, 2013]

Need assistance?



October 2000
RG-109 (Draft)

Air Permit Technical Guidance for Chemical Sources:

Flares and Vapor Oxidizers

printed on recycled paper

Air Permits Division

TEXAS NATURAL RESOURCE CONSERVATION COMMISSION



Barry R. McBee, *Chairman*
R. B. "Ralph" Marquez, *Commissioner*
John M. Baker, *Commissioner*

Jeffrey A. Saitas, P.E., *Executive Director*

Authorization for use or reproduction of any original material contained in this publication, i.e., not obtained from other sources, is freely granted. The Commission would appreciate acknowledgment.

Copies of this publication are available for public use through the Texas State Library, other state depository libraries, and the TNRCC Library, in compliance with the state depository law. For more information on TNRCC publications call (512)239-0028 or visit our Web site at:

htt:www.tnrcc.state.tx.us/publications

Published and distributed by:
Texas Natural Resource Conservation Commission
P.O. Box 13087
Austin, Texas 78711-3087

The TNRCC is an equal opportunity/affirmative action employer. The agency does not allow discrimination on the basis of race, color, religion, national origin, sex, disability, age, sexual orientation or veteran status. In compliance with the Americans with Disabilities Act, this document may be requested in alternate formats by contacting the TNRCC at (512)239-0028, Fax 239-4488, or 1-800-RELAY-TX (TDD), or by writing P.O. Box 13087, Austin, TX 78711-3087.

Technical Disclaimer

This document is intended as guidance to explain the specific requirements for new source review permitting of flares and vapor oxidizers; it does not supersede or replace any state or federal law, regulation, or rule. References to abatement equipment technologies are not intended to represent minimum or maximum levels of Best Available Control Technology (BACT). Determinations of BACT are made on a case-by-case basis as part of the New Source Review of permit applications. BACT determinations are always subject to adjustment in consideration of specific process requirements, air quality concerns, and recent developments in abatement technology. Additionally, specific health effects concerns may indicate stricter abatement than required by the BACT determination.

The represented calculation methods are intended as an aid in the completion of acceptable submittals; alternate calculation methods may be equally acceptable if they are based upon, and adequately demonstrate, sound engineering assumptions or data.

These guidelines are applicable as of this document's publication date but are subject to revision during the permit application preparation and review period. It is the responsibility of the applicants to remain abreast of any guideline or regulation developments that may affect their industries.

The electronic version of this document may not contain attachments or forms (such as the PI-1, Standard Exemptions, or tables) that can be obtained electronically elsewhere on the TNRCC Web site.

The special conditions included with these guidelines are for purposes of example only. Special conditions included in an actual permit are written by the reviewing engineer to address specific permit requirements and operating conditions.

TABLE OF CONTENTS

Chapter 1—Overview 1

Chapter 2—Types of Flare and Oxidizer Systems 3
Flares 3
Vapor Oxidizers 4

Chapter 3—State and Federal Permitting Requirements 5
Preconstruction Authorization 5
General Regulation Applicability 6

Chapter 4—Best Available Control Technology 9
BACT for Flares 9
BACT for Vapor Oxidizers 13

Chapter 5—Emission Factors, Efficiencies, and Calculations 18
Flares: Introduction 18
Flare Emission Factors 18
Flare Destruction Efficiencies 18
Sample Calculations 22
Vapor Oxidizers 29

Chapter 6—Example Permit Conditions 29
General 30
Flares 30
Enclosed Flares or Vapor Oxidizers 31
Vapor Oxidizers 33

References 35
Glossary 37

Attachment A—General Control Device Requirements, 40 CFR § 60.18 . . 39
Attachment B—Typical Refinery Flare Data 42
Attachment C—Typical Acid Gas Flare Data 44
Attachment D—NSR Table 4, Combustion Units 46

Tables

Table 1. Applicable TNRCC Regulations 6
Table 2. Flare Pilot Requirements 12
Table 3. BACT, Sampling, and Monitoring Guidelines for Vapor Oxidizers 16
Table 4. Flare Factors 19
Table 5. 99.5 Percent DRE Flare Factors 21
Table 6. Waste Stream Constituents in Mole Percent 23
Table 7. Estimation of Average Mass Flow Rates 23
Table 8. Emission Rates 23
Table 9. Estimation of Net Heat Releases 24
Table 10. Estimation of Volume Average Molecular Weight 28

This document provides guidance for two classes of vapor combustion control devices: flares and vapor oxidizers. While there may be some overlap between the two, flares have generally been treated separately by the EPA and the TNRCC, in large part because flares have an open flame and often cannot be sampled, so emissions are estimated based on the results of flare testing performed in the early 1980s. Each of the two classes will be dealt with separately in each of the chapters of this document.

Combustion Control Devices NOT Discussed. This document will not cover permitting of RCRA or BIF units because the requirements for these units often go beyond the requirements for state air permitting. Incinerators used to treat solid wastes are covered in another technical guidance document, *Incinerators*. Guidance for combustion control devices associated with spray paint booths, coatings operations, and semiconductor facilities should be obtained by calling the TNRCC New Source Review Permits Division at (512) 239-1250.

Flares

Flare systems generally are open-flame control devices used for disposing of waste gas streams during both routine process and emergency or upset conditions. In addition to simple, unassisted flares, typical smokeless flare systems include, but are not limited to, the following:

- ***Enclosed Flares/Vapor Combustors.*** Enclosed flares are used in disposing of waste gas streams in instances where a visible flame is unacceptable. Applications include chemical processing, petroleum refining and production, and municipal waste gas treatment. These may be referred to as vapor combustors and can have more than one burner in the stack.

- ***Steam-Assisted Flares***. Steam-assisted flares are used in disposing of low-pressure waste gas streams when steam is available and practical to minimize smoking from the flare. Applications are similar to those of enclosed flares. Flares might also be assisted with natural gas if readily available on site; these flares would undergo a case-by-case review.

- ***Air-Assisted Flares.*** Air-assisted flares are used in disposing of low-pressure waste gas streams when practical or when steam utilities are not available to minimize smoking from the flare. Applications include chemical processing, petroleum refining and production, and pipeline transportation.

- ***Sonic Flares.*** Sonic flares are used in disposing of high-pressure waste gas streams. Applications include gas production, pipeline transportation, and treatment plants.

- ***Multipoint Flare Systems.*** Multipoint flare systems are used in disposing of both high- and low-pressure waste gas streams. Multiple burner tips in conjunction with a staged control system provide for controlled combustion. Applications are similar to those of air-assisted flares.

Vapor Oxidizers

These devices generally do not have an open flame but have an exhaust stack which allows for sampling and monitoring of exhaust emissions. The most common type, thermal, relies on the combustion heat of the waste gas and assist fuel (if required) to oxidize the waste gas air contaminants. Other types include:

- ***Recuperative.*** In this case, the waste gas is directed to a heat exchanger to be preheated by the exhaust gas, to minimize the need for additional assist fuel. Recuperative oxidizers are considered a subset of thermal oxidizers in this document.

- ***Regenerative***. Combustion takes place in a chamber with a heat sink, such as ceramic saddles, which retains the heat of combustion, allowing for combustion of more dilute vapor streams (which have a low heat of combustion) at a lower cost. These units generally have multiple chambers, which allow for the preheat of one chamber by exhaust gases while combustion takes place in another chamber.

- ***Catalytic.*** Combustion takes place over a catalyst that allows for combustion at a lower temperature (in the range of 600 to 800°F as opposed to greater than 1400°F for many thermal oxidizers). Catalytic oxidizers function best with a waste stream with constant flow and composition.

This chapter provides detailed instructions for the calculations necessary to verify BACT and estimate emissions from flares and vapor oxidizers. Flares must be checked to determine whether they will satisfy the flow and thermal requirements of 40 CFR § 60.18, and their emissions are determined by the use of emission factors. Example calculations are provided for these flare calculations.

Oxidizer emissions are determined by using previous sampling results or emission factors from the manufacturer or AP-42. These calculations are very similar to the flare calculations and are only discussed in general terms.

Flares: Introduction

Although emissions from emergency flares are not included in a permit when it is issued, emissions should be estimated for both routine process flares and emergency flares. Sometimes, emissions of routine pilot gas combustion may be included in an issued permit for emergency flares (although not required).

In this section, the *flare* emission factors and destruction efficiencies are presented first. This information is followed by sample *calculations* that demonstrate how to ensure that the requirements of 40 CFR § 60.18 are satisfied and how to estimate emissions from a flare. Flare data in Attachment B (typical refinery flare) will be used as a basis in most of the following calculations. Flare data in Attachment C (acid gas flare) will be used as a basis in the example calculations for SO_2 emissions.

Flare Emission Factors

The usual flare destruction efficiencies and emission factors are provided in Table 4. The high-Btu waste streams referred to in the table have a heating value greater than 1,000 Btu/scf.

Flare Destruction Efficiencies

Claims for destruction efficiencies greater than those listed in Table 4 will be considered on a case-by-case basis. The applicant may make one of the three following demonstrations to justify the higher destruction efficiency: (1) general method, (2) 99.5 percent justification, or (3) flare stack sampling.

Table 4. Flare Factors

Waste Stream	Destruction/Removal Efficiency (DRE)		
VOC	98 percent (generic) 99 percent for compounds containing no more than 3 carbons that contain no elements other than carbon and hydrogen in addition to the following compounds: methanol, ethanol, propanol, ethylene oxide and propylene oxide		
H_2S	98 percent		
NH_3	case by case		
CO	case by case		
Air Contaminants	**Emission Factors**		
thermal NO_x	steam-assist:	high Btu	0.0485 lb/MMBtu
		low Btu	0.068 lb/MMBtu
	other:	high Btu	0.138 lb/MMBtu
		low Btu	0.0641 lb/MMBtu
fuel NO_x	NO_x is 0.5 wt percent of inlet NH_3, other fuels case by case		
CO	steam-assist:	high Btu	0.3503 lb/MMBtu
		low Btu	0.3465 lb/MMBtu
	other:	high Btu	0.2755 lb/MMBtu
		low Btu	0.5496 lb/MMBtu
PM	none, required to be smokeless		
SO_2	100 percent S in fuel to SO_2		

*The only exeption ot this is if inorganics might be emitted from the flare. In the case of landfills, the AP-42 PM factor may be used. In other cases, the emissions should be based on the composition of the waste stream routed to the flare.

1.4 Natural Gas Combustion

1.4.1 General[1-2]

Natural gas is one of the major combustion fuels used throughout the country. It is mainly used to generate industrial and utility electric power, produce industrial process steam and heat, and heat residential and commercial space. Natural gas consists of a high percentage of methane (generally above 85 percent) and varying amounts of ethane, propane, butane, and inerts (typically nitrogen, carbon dioxide, and helium). The average gross heating value of natural gas is approximately 1,020 British thermal units per standard cubic foot (Btu/scf), usually varying from 950 to 1,050 Btu/scf.

1.4.2 Firing Practices[3-5]

There are three major types of boilers used for natural gas combustion in commercial, industrial, and utility applications: watertube, firetube, and cast iron. Watertube boilers are designed to pass water through the inside of heat transfer tubes while the outside of the tubes is heated by direct contact with the hot combustion gases and through radiant heat transfer. The watertube design is the most common in utility and large industrial boilers. Watertube boilers are used for a variety of applications, ranging from providing large amounts of process steam, to providing hot water or steam for space heating, to generating high-temperature, high-pressure steam for producing electricity. Furthermore, watertube boilers can be distinguished either as field erected units or packaged units.

Field erected boilers are boilers that are constructed on site and comprise the larger sized watertube boilers. Generally, boilers with heat input levels greater than 100 MMBtu/hr, are field erected. Field erected units usually have multiple burners and, given the customized nature of their construction, also have greater operational flexibility and NO_x control options. Field erected units can also be further categorized as wall-fired or tangential-fired. Wall-fired units are characterized by multiple individual burners located on a single wall or on opposing walls of the furnace while tangential units have several rows of air and fuel nozzles located in each of the four corners of the boiler.

Package units are constructed off-site and shipped to the location where they are needed. While the heat input levels of packaged units may range up to 250 MMBtu/hr, the physical size of these units are constrained by shipping considerations and generally have heat input levels less than 100 MMBtu/hr. Packaged units are always wall-fired units with one or more individual burners. Given the size limitations imposed on packaged boilers, they have limited operational flexibility and cannot feasibly incorporate some NO_x control options.

Firetube boilers are designed such that the hot combustion gases flow through tubes, which heat the water circulating outside of the tubes. These boilers are used primarily for space heating systems, industrial process steam, and portable power boilers. Firetube boilers are almost exclusively packaged units. The two major types of firetube units are Scotch Marine boilers and the older firebox boilers. In cast iron boilers, as in firetube boilers, the hot gases are contained inside the tubes and the water being heated circulates outside the tubes. However, the units are constructed of cast iron rather than steel. Virtually all cast iron boilers are constructed as package boilers. These boilers are used to produce either low-pressure steam or hot water, and are most commonly used in small commercial applications.

Natural gas is also combusted in residential boilers and furnaces. Residential boilers and furnaces generally resemble firetube boilers with flue gas traveling through several channels or tubes with water or air circulated outside the channels or tubes.

1.4.3 Emissions[3-4]

The emissions from natural gas-fired boilers and furnaces include nitrogen oxides (NO_x), carbon monoxide (CO), and carbon dioxide (CO_2), methane (CH_4), nitrous oxide (N_2O), volatile organic compounds (VOCs), trace amounts of sulfur dioxide (SO_2), and particulate matter (PM).

Nitrogen Oxides -

Nitrogen oxides formation occurs by three fundamentally different mechanisms. The principal mechanism of NO_x formation in natural gas combustion is thermal NO_x. The thermal NO_x mechanism occurs through the thermal dissociation and subsequent reaction of nitrogen (N_2) and oxygen (O_2) molecules in the combustion air. Most NO_x formed through the thermal NO_x mechanism occurs in the high temperature flame zone near the burners. The formation of thermal NO_x is affected by three furnace-zone factors: (1) oxygen concentration, (2) peak temperature, and (3) time of exposure at peak temperature. As these three factors increase, NO_x emission levels increase. The emission trends due to changes in these factors are fairly consistent for all types of natural gas-fired boilers and furnaces. Emission levels vary considerably with the type and size of combustor and with operating conditions (e.g., combustion air temperature, volumetric heat release rate, load, and excess oxygen level).

The second mechanism of NO_x formation, called prompt NO_x, occurs through early reactions of nitrogen molecules in the combustion air and hydrocarbon radicals from the fuel. Prompt NO_x reactions occur within the flame and are usually negligible when compared to the amount of NO_x formed through the thermal NO_x mechanism. However, prompt NO_x levels may become significant with ultra-low-NO_x burners.

The third mechanism of NO_x formation, called fuel NO_x, stems from the evolution and reaction of fuel-bound nitrogen compounds with oxygen. Due to the characteristically low fuel nitrogen content of natural gas, NO_x formation through the fuel NO_x mechanism is insignificant.

Carbon Monoxide -

The rate of CO emissions from boilers depends on the efficiency of natural gas combustion. Improperly tuned boilers and boilers operating at off-design levels decrease combustion efficiency resulting in increased CO emissions. In some cases, the addition of NO_x control systems such as low NO_x burners and flue gas recirculation (FGR) may also reduce combustion efficiency, resulting in higher CO emissions relative to uncontrolled boilers.

Volatile Organic Compounds -

The rate of VOC emissions from boilers and furnaces also depends on combustion efficiency. VOC emissions are minimized by combustion practices that promote high combustion temperatures, long residence times at those temperatures, and turbulent mixing of fuel and combustion air. Trace amounts of VOC species in the natural gas fuel (e.g., formaldehyde and benzene) may also contribute to VOC emissions if they are not completely combusted in the boiler.

Sulfur Oxides -

Emissions of SO_2 from natural gas-fired boilers are low because pipeline quality natural gas typically has sulfur levels of 2,000 grains per million cubic feet. However, sulfur-containing odorants are added to natural gas for detecting leaks, leading to small amounts of SO_2 emissions. Boilers combusting unprocessed natural gas may have higher SO_2 emissions due to higher levels of sulfur in the natural gas. For these units, a sulfur mass balance should be used to determine SO_2 emissions.

Particulate Matter -

Because natural gas is a gaseous fuel, filterable PM emissions are typically low. Particulate matter from natural gas combustion has been estimated to be less than 1 micrometer in size and has filterable and condensable fractions. Particulate matter in natural gas combustion are usually larger molecular weight hydrocarbons that are not fully combusted. Increased PM emissions may result from poor air/fuel mixing or maintenance problems.

Greenhouse Gases -[6-9]

CO_2, CH_4, and N_2O emissions are all produced during natural gas combustion. In properly tuned boilers, nearly all of the fuel carbon (99.9 percent) in natural gas is converted to CO_2 during the combustion process. This conversion is relatively independent of boiler or combustor type. Fuel carbon not converted to CO_2 results in CH_4, CO, and/or VOC emissions and is due to incomplete combustion. Even in boilers operating with poor combustion efficiency, the amount of CH_4, CO, and VOC produced is insignificant compared to CO_2 levels.

Formation of N_2O during the combustion process is affected by two furnace-zone factors. N_2O emissions are minimized when combustion temperatures are kept high (above 1475°F) and excess oxygen is kept to a minimum (less than 1 percent).

Methane emissions are highest during low-temperature combustion or incomplete combustion, such as the start-up or shut-down cycle for boilers. Typically, conditions that favor formation of N_2O also favor emissions of methane.

1.4.4 Controls[4,10]

NO_x Controls -

Currently, the two most prevalent combustion control techniques used to reduce NO_x emissions from natural gas-fired boilers are flue gas recirculation (FGR) and low NO_x burners. In an FGR system, a portion of the flue gas is recycled from the stack to the burner windbox. Upon entering the windbox, the recirculated gas is mixed with combustion air prior to being fed to the burner. The recycled flue gas consists of combustion products which act as inerts during combustion of the fuel/air mixture. The FGR system reduces NO_x emissions by two mechanisms. Primarily, the recirculated gas acts as a dilutent to reduce combustion temperatures, thus suppressing the thermal NO_x mechanism. To a lesser extent, FGR also reduces NO_x formation by lowering the oxygen concentration in the primary flame zone. The amount of recirculated flue gas is a key operating parameter influencing NO_x emission rates for these systems. An FGR system is normally used in combination with specially designed low NO_x burners capable of sustaining a stable flame with the increased inert gas flow resulting from the use of FGR. When low NO_x burners and FGR are used in combination, these techniques are capable of reducing NO_x emissions by 60 to 90 percent.

Low NO_x burners reduce NO_x by accomplishing the combustion process in stages. Staging partially delays the combustion process, resulting in a cooler flame which suppresses thermal NO_x formation. The two most common types of low NO_x burners being applied to natural gas-fired boilers are staged air burners and staged fuel burners. NO_x emission reductions of 40 to 85 percent (relative to uncontrolled emission levels) have been observed with low NO_x burners.

Other combustion control techniques used to reduce NO_x emissions include staged combustion and gas reburning. In staged combustion (e.g., burners-out-of-service and overfire air), the degree of staging is a key operating parameter influencing NO_x emission rates. Gas reburning is similar to the use of overfire in the use of combustion staging. However, gas reburning injects additional amounts of natural gas in the upper furnace, just before the overfire air ports, to provide increased reduction of NO_x to NO_2.

Two postcombustion technologies that may be applied to natural gas-fired boilers to reduce NO_x emissions are selective noncatalytic reduction (SNCR) and selective catalytic reduction (SCR). The SNCR system injects ammonia (NH_3) or urea into combustion flue gases (in a specific temperature zone) to reduce NO_x emission. The Alternative Control Techniques (ACT) document for NO_x emissions from utility boilers, maximum SNCR performance was estimated to range from 25 to 40 percent for natural gas-fired boilers.[12] Performance data available from several natural gas fired utility boilers with SNCR show a 24 percent reduction in NO_x for applications on wall-fired boilers and a 13 percent reduction in NO_x for applications on tangential-fired boilers.[11] In many situations, a boiler may have an SNCR system installed to trim NO_x emissions to meet permitted levels. In these cases, the SNCR system may not be operated to achieve maximum NO_x reduction. The SCR system involves injecting NH_3 into the flue gas in the presence of a catalyst to reduce NO_x emissions. No data were available on SCR performance on natural gas fired boilers at the time of this publication. However, the ACT Document for utility boilers estimates NO_x reduction efficiencies for SCR control ranging from 80 to 90 percent.[12]

Emission factors for natural gas combustion in boilers and furnaces are presented in Tables 1.4-1, 1.4-2, 1.4-3, and 1.4-4.[11] Tables in this section present emission factors on a volume basis ($lb/10^6$ scf). To convert to an energy basis (lb/MMBtu), divide by a heating value of 1,020 MMBtu/10^6 scf. For the purposes of developing emission factors, natural gas combustors have been organized into three general categories: large wall-fired boilers with greater than 100 MMBtu/hr of heat input, boilers and residential furnaces with less than 100 MMBtu/hr of heat input, and tangential-fired boilers. Boilers within these categories share the same general design and operating characteristics and hence have similar emission characteristics when combusting natural gas.

Emission factors are rated from A to E to provide the user with an indication of how "good" the factor is, with "A" being excellent and "E" being poor. The criteria that are used to determine a rating for an emission factor can be found in the Emission Factor Documentation for AP-42 Section 1.4 and in the introduction to the AP-42 document.

1.4.5 Updates Since the Fifth Edition

The Fifth Edition was released in January 1995. Revisions to this section are summarized below. For further detail, consult the Emission Factor Documentation for this section. These and other documents can be found on the Emission Factor and Inventory Group (EFIG) home page (http://www.epa.gov/ttn/chief).

Supplement D, March 1998

- Text was revised concerning Firing Practices, Emissions, and Controls.
- All emission factors were updated based on 482 data points taken from 151 source tests. Many new emission factors have been added for speciated organic compounds, including hazardous air pollutants.

July 1998 - minor changes

- Footnote D was added to table 1.4-3 to explain why the sum of individual HAP may exceed VOC or TOC, the web address was updated, and the references were reordered.

Table 1.4-1. EMISSION FACTORS FOR NITROGEN OXIDES (NO_x) AND CARBON MONOXIDE (CO) FROM NATURAL GAS COMBUSTION[a]

Combustor Type (MMBtu/hr Heat Input) [SCC]	NO_x[b]		CO	
	Emission Factor ($lb/10^6$ scf)	Emission Factor Rating	Emission Factor ($lb/10^6$ scf)	Emission Factor Rating
Large Wall-Fired Boilers (>100) [1-01-006-01, 1-02-006-01, 1-03-006-01]				
Uncontrolled (Pre-NSPS)[c]	280	A	84	B
Uncontrolled (Post-NSPS)[c]	190	A	84	B
Controlled - Low NO_x burners	140	A	84	B
Controlled - Flue gas recirculation	100	D	84	B
Small Boilers (<100) [1-01-006-02, 1-02-006-02, 1-03-006-02, 1-03-006-03]				
Uncontrolled	100	B	84	B
Controlled - Low NO_x burners	50	D	84	B
Controlled - Low NO_x burners/Flue gas recirculation	32	C	84	B
Tangential-Fired Boilers (All Sizes) [1-01-006-04]				
Uncontrolled	170	A	24	C
Controlled - Flue gas recirculation	76	D	98	D
Residential Furnaces (<0.3) [No SCC]				
Uncontrolled	94	B	40	B

[a] Reference 11. Units are in pounds of pollutant per million standard cubic feet of natural gas fired. To convert from $lb/10^6$ scf to $kg/10^6$ m^3, multiply by 16. Emission factors are based on an average natural gas higher heating value of 1,020 Btu/scf. To convert from $lb/10^6$ scf to lb/MMBtu, divide by 1,020. The emission factors in this table may be converted to other natural gas heating values by multiplying the given emission factor by the ratio of the specified heating value to this average heating value. SCC = Source Classification Code. ND = no data. NA = not applicable.

[b] Expressed as NO_2. For large and small wall fired boilers with SNCR control, apply a 24 percent reduction to the appropriate NO_X emission factor. For tangential-fired boilers with SNCR control, apply a 13 percent reduction to the appropriate NO_X emission factor.

[c] NSPS=New Source Performance Standard as defined in 40 CFR 60 Subparts D and Db. Post-NSPS units are boilers with greater than 250 MMBtu/hr of heat input that commenced construction modification, or reconstruction after August 17, 1971, and units with heat input capacities between 100 and 250 MMBtu/hr that commenced construction modification, or reconstruction after June 19, 1984.

TABLE 1.4-2. EMISSION FACTORS FOR CRITERIA POLLUTANTS AND GREENHOUSE GASES FROM NATURAL GAS COMBUSTION[a]

Pollutant	Emission Factor ($lb/10^6$ scf)	Emission Factor Rating
CO_2[b]	120,000	A
Lead	0.0005	D
N_2O (Uncontrolled)	2.2	E
N_2O (Controlled-low-NO_X burner)	0.64	E
PM (Total)[c]	7.6	D
PM (Condensable)[c]	5.7	D
PM (Filterable)[c]	1.9	B
SO_2[d]	0.6	A
TOC	11	B
Methane	2.3	B
VOC	5.5	C

[a] Reference 11. Units are in pounds of pollutant per million standard cubic feet of natural gas fired. Data are for all natural gas combustion sources. To convert from $lb/10^6$ scf to $kg/10^6$ m^3, multiply by 16. To convert from $lb/10^6$ scf to 1b/MMBtu, divide by 1,020. The emission factors in this table may be converted to other natural gas heating values by multiplying the given emission factor by the ratio of the specified heating value to this average heating value. TOC = Total Organic Compounds. VOC = Volatile Organic Compounds.

[b] Based on approximately 100% conversion of fuel carbon to CO_2. $CO_2[lb/10^6 \text{ scf}] = (3.67)(CON)(C)(D)$, where CON = fractional conversion of fuel carbon to CO_2, C = carbon content of fuel by weight (0.76), and D = density of fuel, 4.2×10^4 $lb/10^6$ scf.

[c] All PM (total, condensible, and filterable) is assumed to be less than 1.0 micrometer in diameter. Therefore, the PM emission factors presented here may be used to estimate PM_{10}, $PM_{2.5}$ or PM_1 emissions. Total PM is the sum of the filterable PM and condensible PM. Condensible PM is the particulate matter collected using EPA Method 202 (or equivalent). Filterable PM is the particulate matter collected on, or prior to, the filter of an EPA Method 5 (or equivalent) sampling train.

[d] Based on 100% conversion of fuel sulfur to SO_2. Assumes sulfur content is natural gas of 2,000 grains/10^6 scf. The SO_2 emission factor in this table can be converted to other natural gas sulfur contents by multiplying the SO_2 emission factor by the ratio of the site-specific sulfur content (grains/10^6 scf) to 2,000 grains/10^6 scf.

TABLE 1.4-3. EMISSION FACTORS FOR SPECIATED ORGANIC COMPOUNDS FROM NATURAL GAS COMBUSTION[a]

CAS No.	Pollutant	Emission Factor ($lb/10^6$ scf)	Emission Factor Rating
91-57-6	2-Methylnaphthalene[b, c]	2.4E-05	D
56-49-5	3-Methylcholanthrene[b, c]	<1.8E-06	E
	7,12-Dimethylbenz(a)anthracene[b,c]	<1.6E-05	E
83-32-9	Acenaphthene[b,c]	<1.8E-06	E
203-96-8	Acenaphthylene[b,c]	<1.8E-06	E
120-12-7	Anthracene[b,c]	<2.4E-06	E
56-55-3	Benz(a)anthracene[b,c]	<1.8E-06	E
71-43-2	Benzene[b]	2.1E-03	B
50-32-8	Benzo(a)pyrene[b,c]	<1.2E-06	E
205-99-2	Benzo(b)fluoranthene[b,c]	<1.8E-06	E
191-24-2	Benzo(g,h,i)perylene[b,c]	<1.2E-06	E
207-08-9	Benzo(k)fluoranthene[b,c]	<1.8E-06	E
106-97-8	Butane	2.1E+00	E
218-01-9	Chrysene[b,c]	<1.8E-06	E
53-70-3	Dibenzo(a,h)anthracene[b,c]	<1.2E-06	E
25321-22-6	Dichlorobenzene[b]	1.2E-03	E
74-84-0	Ethane	3.1E+00	E
206-44-0	Fluoranthene[b,c]	3.0E-06	E
86-73-7	Fluorene[b,c]	2.8E-06	E
50-00-0	Formaldehyde[b]	7.5E-02	B
110-54-3	Hexane[b]	1.8E+00	E
193-39-5	Indeno(1,2,3-cd)pyrene[b,c]	<1.8E-06	E
91-20-3	Naphthalene[b]	6.1E-04	E
109-66-0	Pentane	2.6E+00	E
85-01-8	Phenanathrene[b,c]	1.7E-05	D
74-98-6	Propane	1.6E+00	E

TABLE 1.4-3. EMISSION FACTORS FOR SPECIATED ORGANIC COMPOUNDS FROM NATURAL GAS COMBUSTION (Continued)

CAS No.	Pollutant	Emission Factor ($lb/10^6$ scf)	Emission Factor Rating
129-00-0	Pyrene[b, c]	5.0E-06	E
108-88-3	Toluene[b]	3.4E-03	C

[a] Reference 11. Units are in pounds of pollutant per million standard cubic feet of natural gas fired. Data are for all natural gas combustion sources. To convert from $lb/10^6$ scf to $kg/10^6$ m^3, multiply by 16. To convert from $1b/10^6$ scf to lb/MMBtu, divide by 1,020. Emission Factors preceeded with a less-than symbol are based on method detection limits.

[b] Hazardous Air Pollutant (HAP) as defined by Section 112(b) of the Clean Air Act.

[c] HAP because it is Polycyclic Organic Matter (POM). POM is a HAP as defined by Section 112(b) of the Clean Air Act.

[d] The sum of individual organic compounds may exceed the VOC and TOC emission factors due to differences in test methods and the availability of test data for each pollutant.

TABLE 1.4-4. EMISSION FACTORS FOR METALS FROM NATURAL GAS COMBUSTION[a]

CAS No.	Pollutant	Emission Factor ($lb/10^6$ scf)	Emission Factor Rating
7440-38-2	Arsenic[b]	2.0E-04	E
7440-39-3	Barium	4.4E-03	D
7440-41-7	Beryllium[b]	<1.2E-05	E
7440-43-9	Cadmium[b]	1.1E-03	D
7440-47-3	Chromium[b]	1.4E-03	D
7440-48-4	Cobalt[b]	8.4E-05	D
7440-50-8	Copper	8.5E-04	C
7439-96-5	Manganese[b]	3.8E-04	D
7439-97-6	Mercury[b]	2.6E-04	D
7439-98-7	Molybdenum	1.1E-03	D
7440-02-0	Nickel[b]	2.1E-03	C
7782-49-2	Selenium[b]	<2.4E-05	E
7440-62-2	Vanadium	2.3E-03	D
7440-66-6	Zinc	2.9E-02	E

[a] Reference 11. Units are in pounds of pollutant per million standard cubic feet of natural gas fired. Data are for all natural gas combustion sources. Emission factors preceeded by a less-than symbol are based on method detection limits. To convert from $lb/10^6$ scf to $kg/10^6$ m^3, multiply by l6. To convert from $lb/10^6$ scf to 1b/MMBtu, divide by 1,020.

[b] Hazardous Air Pollutant as defined by Section 112(b) of the Clean Air Act.

References For Section 1.4

1. *Exhaust Gases From Combustion And Industrial Processes*, EPA Contract No. EHSD 71-36, Engineering Science, Inc., Washington, DC, October 1971.

2. *Chemical Engineers' Handbook, Fourth Edition*, J. H. Perry, Editor, McGraw-Hill Book Company, New York, NY, 1963.

3. *Background Information Document For Industrial Boilers*, EPA-450/3-82-006a, U. S. Environmental Protection Agency, Research Triangle Park, NC, March 1982.

4. *Background Information Document For Small Steam Generating Units*, EPA-450/3-87-000, U. S . Environmental Protection Agency, Research Triangle Park, NC, 1987.

5. J. L. Muhlbaier, "Particulate and Gaseous Emissions From Natural Gas Furnaces and Water Heaters", *Journal Of The Air Pollution Control Association*, December 1981.

6. L. P. Nelson, *et al.*, *Global Combustion Sources Of Nitrous Oxide Emissions*, Research Project 2333-4 Interim Report, Sacramento: Radian Corporation, 1991.

7. R. L. Peer, *et al.*, *Characterization Of Nitrous Oxide Emission Sources*, Prepared for the U. S. EPA Contract 68-D1-0031, Research Triangle Park, NC: Radian Corporation, 1995.

8. S. D. Piccot, *et al.*, *Emissions and Cost Estimates For Globally Significant Anthropogenic Combustion Sources Of NO_x, N_2O, CH_4, CO, and CO_2,* EPA Contract No. 68-02-4288, Research Triangle Park, NC: Radian Corporation, 1990.

9. *Sector-Specific Issues and Reporting Methodologies Supporting the General Guidelines for the Voluntary Reporting of Greenhouse Gases under Section 1605(b) of the Energy Policy Act of 1992* (1994) DOE/PO-0028, Volume 2 of 3, U.S. Department of Energy.

10. J. P. Kesselring and W. V. Krill, "A Low-NO_x Burner For Gas-Fired Firetube Boilers", *Proceedings: 1985 Symposium On Stationary Combustion NO_x Control, Volume 2*, EPRI CS-4360, Electric Power Research Institute, Palo Alto, CA, January 1986.

11. *Emission Factor Documentation for AP-42 Section 1.4—Natural Gas Combustion*, Technical Support Division, Office of Air Quality Planning and Standards, U. S. Environmental Protection Agency, Research Triangle Park, NC, 1997.

12. *Alternate Control Techniques Document - NO_x Emissions from Utility Boilers*, EPA-453/R-94-023, U. S. Environmental Protection Agency, Research Triangle Park, NC, March 1994.

United States
Environmental Protection
Agency

Office of Air Quality
Planning and Standards
Research Triangle Park NC 27711

EPA-453/R-95-017
November 1995

Air

EPA

Protocol for Equipment Leak Emission Estimates

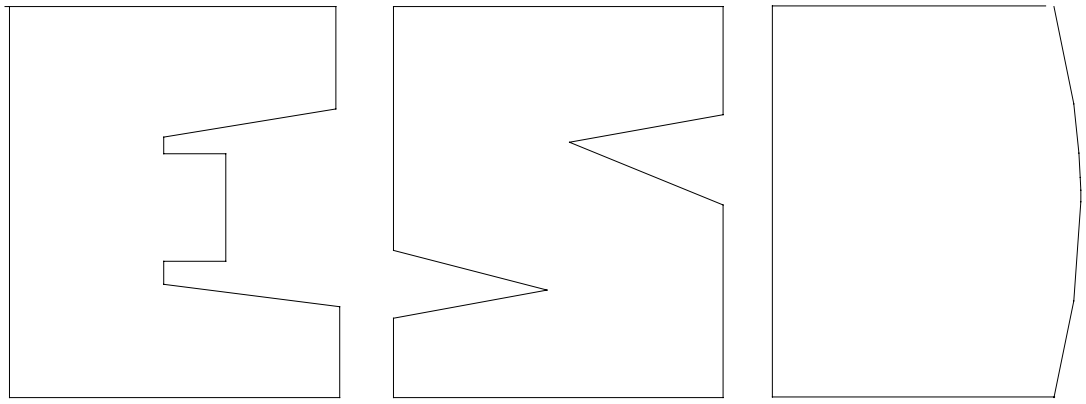

TABLE 2-4. OIL AND GAS PRODUCTION OPERATIONS AVERAGE EMISSION FACTORS (kg/hr/source)

Equipment Type	Service[a]	Emission Factor (kg/hr/source)[b]
Valves	Gas	4.5E-03
	Heavy Oil	8.4E-06
	Light Oil	2.5E-03
	Water/Oil	9.8E-05
Pump seals	Gas	2.4E-03
	Heavy Oil	NA
	Light Oil	1.3E-02
	Water/Oil	2.4E-05
Others[c]	Gas	8.8E-03
	Heavy Oil	3.2E-05
	Light Oil	7.5E-03
	Water/Oil	1.4E-02
Connectors	Gas	2.0E-04
	Heavy Oil	7.5E-06
	Light Oil	2.1E-04
	Water/Oil	1.1E-04
Flanges	Gas	3.9E-04
	Heavy Oil	3.9E-07
	Light Oil	1.1E-04
	Water/Oil	2.9E-06
Open-ended lines	Gas	2.0E-03
	Heavy Oil	1.4E-04
	Light Oil	1.4E-03
	Water/Oil	2.5E-04

[a]Water/Oil emission factors apply to water streams in oil service with a water content greater than 50%, from the point of origin to the point where the water content reaches 99%. For water streams with a water content greater than 99%, the emission rate is considered negligible.

[b]These factors are for total organic compound emission rates (including non-VOC's such as methane and ethane) and apply to light crude, heavy crude, gas plant, gas production, and off shore facilities. "NA" indicates that not enough data were available to develop the indicated emission factor.

[c]The "other" equipment type was derived from compressors, diaphrams, drains, dump arms, hatches, instruments, meters, pressure relief valves, polished rods, relief valves, and vents. This "other" equipment type should be applied for any equipment type other than connectors, flanges, open-ended lines, pumps, or valves.

13.2.2 Unpaved Roads

13.2.2.1 General

When a vehicle travels an unpaved road, the force of the wheels on the road surface causes pulverization of surface material. Particles are lifted and dropped from the rolling wheels, and the road surface is exposed to strong air currents in turbulent shear with the surface. The turbulent wake behind the vehicle continues to act on the road surface after the vehicle has passed.

The particulate emission factors presented in the previous draft version of this section of AP-42, dated October 2001, implicitly included the emissions from vehicles in the form of exhaust, brake wear, and tire wear as well as resuspended road surface material[25]. EPA included these sources in the emission factor equation for unpaved public roads (equation 1b in this section) since the field testing data used to develop the equation included both the direct emissions from vehicles and emissions from resuspension of road dust.

This version of the unpaved public road emission factor equation only estimates particulate emissions from resuspended road surface material [23, 26]. The particulate emissions from vehicle exhaust, brake wear, and tire wear are now estimated separately using EPA's MOBILE6.2 [24]. This approach eliminates the possibility of double counting emissions. Double counting results when employing the previous version of the emission factor equation in this section and MOBILE6.2 to estimate particulate emissions from vehicle traffic on unpaved public roads. It also incorporates the decrease in exhaust emissions that has occurred since the unpaved public road emission factor equation was developed. The previous version of the unpaved public road emission factor equation includes estimates of emissions from exhaust, brake wear, and tire wear based on emission rates for vehicles in the 1980 calendar year fleet. The amount of PM released from vehicle exhaust has decreased since 1980 due to lower new vehicle emission standards and changes in fuel characteristics.

13.2.2.2 Emissions Calculation And Correction Parameters[1-6]

The quantity of dust emissions from a given segment of unpaved road varies linearly with the volume of traffic. Field investigations also have shown that emissions depend on source parameters that characterize the condition of a particular road and the associated vehicle traffic. Characterization of these source parameters allow for "correction" of emission estimates to specific road and traffic conditions present on public and industrial roadways.

Dust emissions from unpaved roads have been found to vary directly with the fraction of silt (particles smaller than 75 micrometers [μm] in diameter) in the road surface materials.[1] The silt fraction is determined by measuring the proportion of loose dry surface dust that passes a 200-mesh screen, using the ASTM-C-136 method. A summary of this method is contained in Appendix C of AP-42. Table 13.2.2-1 summarizes measured silt values for industrial unpaved roads. Table 13.2.2-2 summarizes measured silt values for public unpaved roads. It should be noted that the ranges of silt content vary over two orders of magnitude. Therefore, the use of data from this table can potentially introduce considerable error. Use of this data is strongly discouraged when it is feasible to obtain locally gathered data.

Since the silt content of a rural dirt road will vary with geographic location, it should be measured for use in projecting emissions. As a conservative approximation, the silt content of the parent soil in the area can be used. Tests, however, show that road silt content is normally lower than in the surrounding parent soil, because the fines are continually removed by the vehicle traffic, leaving a higher percentage of coarse particles.

Other variables are important in addition to the silt content of the road surface material. For example, at industrial sites, where haul trucks and other heavy equipment are common, emissions are highly correlated with vehicle weight. On the other hand, there is far less variability in the weights of cars and pickup trucks that commonly travel publicly accessible unpaved roads throughout the United States. For those roads, the moisture content of the road surface material may be more dominant in determining differences in emission levels between, for example a hot, desert environment and a cool, moist location.

The PM-10 and TSP emission factors presented below are the outcomes from stepwise linear regressions of field emission test results of vehicles traveling over unpaved surfaces. Due to a limited amount of information available for PM-2.5, the expression for that particle size range has been scaled against the result for PM-10. Consequently, the quality rating for the PM-2.5 factor is lower than that for the PM-10 expression.

Table 13.2.2-1. TYPICAL SILT CONTENT VALUES OF SURFACE MATERIAL ON INDUSTRIAL UNPAVED ROADS[a]

Industry	Road Use Or Surface Material	Plant Sites	No. Of Samples	Silt Content (%)	
				Range	Mean
Copper smelting	Plant road	1	3	16 - 19	17
Iron and steel production	Plant road	19	135	0.2 - 19	6.0
Sand and gravel processing	Plant road	1	3	4.1 - 6.0	4.8
	Material storage area	1	1	-	7.1
Stone quarrying and processing	Plant road	2	10	2.4 - 16	10
	Haul road to/from pit	4	20	5.0-15	8.3
Taconite mining and processing	Service road	1	8	2.4 - 7.1	4.3
	Haul road to/from pit	1	12	3.9 - 9.7	5.8
Western surface coal mining	Haul road to/from pit	3	21	2.8 - 18	8.4
	Plant road	2	2	4.9 - 5.3	5.1
	Scraper route	3	10	7.2 - 25	17
	Haul road (freshly graded)	2	5	18 - 29	24
Construction sites	Scraper routes	7	20	0.56-23	8.5
Lumber sawmills	Log yards	2	2	4.8-12	8.4
Municipal solid waste landfills	Disposal routes	4	20	2.2 - 21	6.4

[a]References 1,5-15.

The following empirical expressions may be used to estimate the quantity in pounds (lb) of size-specific particulate emissions from an unpaved road, per vehicle mile traveled (VMT):

For vehicles traveling on unpaved surfaces at industrial sites, emissions are estimated from the following equation:

$$E = k\,(s/12)^a (W/3)^b \quad (1a)$$

and, for vehicles traveling on publicly accessible roads, dominated by light duty vehicles, emissions may be estimated from the following:

$$E = \frac{k\,(s/12)^a (S/30)^d}{(M/0.5)^c} - C \quad (1b)$$

where k, a, b, c and d are empirical constants (Reference 6) given below and

E = size-specific emission factor (lb/VMT)
s = surface material silt content (%)
W = mean vehicle weight (tons)
M = surface material moisture content (%)
S = mean vehicle speed (mph)
C = emission factor for 1980's vehicle fleet exhaust, brake wear and tire wear.

The source characteristics s, W and M are referred to as correction parameters for adjusting the emission estimates to local conditions. The metric conversion from lb/VMT to grams (g) per vehicle kilometer traveled (VKT) is as follows:

1 lb/VMT = 281.9 g/VKT

The constants for Equations 1a and 1b based on the stated aerodynamic particle sizes are shown in Tables 13.2.2-2 and 13.2.2-4. The PM-2.5 particle size multipliers (k-factors) are taken from Reference 27.

Table 13.2.2-2. CONSTANTS FOR EQUATIONS 1a AND 1b

Constant	Industrial Roads (Equation 1a)			Public Roads (Equation 1b)		
	PM-2.5	PM-10	PM-30*	PM-2.5	PM-10	PM-30*
k (lb/VMT)	0.15	1.5	4.9	0.18	1.8	6.0
a	0.9	0.9	0.7	1	1	1
b	0.45	0.45	0.45	-	-	-
c	-	-	-	0.2	0.2	0.3
d	-	-	-	0.5	0.5	0.3
Quality Rating	B	B	B	B	B	B

*Assumed equivalent to total suspended particulate matter (TSP)
"-" = not used in the emission factor equation

Table 13.2.2-2 also contains the quality ratings for the various size-specific versions of Equation 1a and 1b. The equation retains the assigned quality rating, if applied within the ranges of source conditions, shown in Table 13.2.2-3, that were tested in developing the equation:

Table 13.2.2-3. RANGE OF SOURCE CONDITIONS USED IN DEVELOPING EQUATION 1a AND 1b

Emission Factor	Surface Silt Content, %	Mean Vehicle Weight		Mean Vehicle Speed		Mean No. of Wheels	Surface Moisture Content, %
		Mg	ton	km/hr	mph		
Industrial Roads (Equation 1a)	1.8-25.2	1.8-260	2-290	8-69	5-43	4-17[a]	0.03-13
Public Roads (Equation 1b)	1.8-35	1.4-2.7	1.5-3	16-88	10-55	4-4.8	0.03-13

[a] See discussion in text.

As noted earlier, the models presented as Equations 1a and 1b were developed from tests of traffic on unpaved surfaces. Unpaved roads have a hard, generally nonporous surface that usually dries quickly after a rainfall or watering, because of traffic-enhanced natural evaporation. (Factors influencing how fast a road dries are discussed in Section 13.2.2.3, below.) The quality ratings given above pertain to the mid-range of the measured source conditions for the equation. A higher mean vehicle weight and a higher than normal traffic rate may be justified when performing a worst-case analysis of emissions from unpaved roads.

The emission factors for the exhaust, brake wear and tire wear of a 1980's vehicle fleet (*C*) was obtained from EPA's MOBILE6.2 model [23]. The emission factor also varies with aerodynamic size range

as shown in Table 13.2.2-4

Table 13.2.2-4. EMISSION FACTOR FOR 1980'S VEHICLE FLEET EXHAUST, BRAKE WEAR AND TIRE WEAR

Particle Size Range[a]	*C*, Emission Factor for Exhaust, Brake Wear and Tire Wear[b] lb/VMT
$PM_{2.5}$	0.00036
PM_{10}	0.00047
PM_{30}[c]	0.00047

[a] Refers to airborne particulate matter (PM-x) with an aerodynamic diameter equal to or less than x micrometers.
[b] Units shown are pounds per vehicle mile traveled (lb/VMT).
[c] PM-30 is sometimes termed "suspendable particulate" (SP) and is often used as a surrogate for TSP.

It is important to note that the vehicle-related source conditions refer to the average weight, speed, and number of wheels for all vehicles traveling the road. For example, if 98 percent of traffic on the road are 2-ton cars and trucks while the remaining 2 percent consists of 20-ton trucks, then the mean weight is 2.4 tons. More specifically, Equations 1a and 1b are *not* intended to be used to calculate a separate emission factor for each vehicle class within a mix of traffic on a given unpaved road. That is, in the example, one should *not* determine one factor for the 2-ton vehicles and a second factor for the 20-ton trucks. Instead, only one emission factor should be calculated that represents the "fleet" average of 2.4 tons for all vehicles traveling the road.

Moreover, to retain the quality ratings when addressing a group of unpaved roads, it is necessary that reliable correction parameter values be determined for the road in question. The field and laboratory procedures for determining road surface silt and moisture contents are given in AP-42 Appendices C.1 and C.2. Vehicle-related parameters should be developed by recording visual observations of traffic. In some cases, vehicle parameters for industrial unpaved roads can be determined by reviewing maintenance records or other information sources at the facility.

In the event that site-specific values for correction parameters cannot be obtained, then default values may be used.In the absence of site-specific silt content information, an appropriate mean value from Table 13.2.2-1 may be used as a default value, but the quality rating of the equation is reduced by two letters. Because of significant differences found between different types of road surfaces and between different areas of the country, use of the default moisture content value of 0.5 percent in Equation 1b is discouraged. The quality rating should be downgraded two letters when the default moisture content value is used. (It is assumed that readers addressing industrial roads have access to the information needed to develop average vehicle information in Equation 1a for their facility.)

The effect of routine watering to control emissions from unpaved roads is discussed below in Section 13.2.2.3, “Controls”. However, all roads are subject to some natural mitigation because of rainfall and other precipitation. The Equation 1a and 1b emission factors can be extrapolated to annual

average uncontrolled conditions (but including natural mitigation) under the simplifying assumption that annual average emissions are inversely proportional to the number of days with measurable (more than 0.254 mm [0.01 inch]) precipitation:

$$E_{ext} = E\ [(365 - P)/365] \quad (2)$$

where:

E_{ext} = annual size-specific emission factor extrapolated for natural mitigation, lb/VMT

E = emission factor from Equation 1a or 1b

P = number of days in a year with at least 0.254 mm (0.01 in) of precipitation (see below)

Figure 13.2.2-1 gives the geographical distribution for the mean annual number of "wet" days for the United States.

Equation 2 provides an estimate that accounts for precipitation on an annual average basis for the purpose of inventorying emissions. It should be noted that Equation 2 does not account for differences in the temporal distributions of the rain events, the quantity of rain during any event, or the potential for the rain to evaporate from the road surface. In the event that a finer temporal and spatial resolution is desired for inventories of public unpaved roads, estimates can be based on a more complex set of assumptions. These assumptions include:

1. The moisture content of the road surface material is increased in proportion to the quantity of water added;
2. The moisture content of the road surface material is reduced in proportion to the Class A pan evaporation rate;
3. The moisture content of the road surface material is reduced in proportion to the traffic volume; and
4. The moisture content of the road surface material varies between the extremes observed in the area. The CHIEF Web site (http://www.epa.gov/ttn/chief/ap42/ch13/related/c13s02-2.html) has a file which contains a spreadsheet program for calculating emission factors which are temporally and spatially resolved. Information required for use of the spreadsheet program includes monthly Class A pan evaporation values, hourly meteorological data for precipitation, humidity and snow cover, vehicle traffic information, and road surface material information.

It is emphasized that the simple assumption underlying Equation 2 and the more complex set of assumptions underlying the use of the procedure which produces a finer temporal and spatial resolution have not been verified in any rigorous manner. For this reason, the quality ratings for either approach should be downgraded one letter from the rating that would be applied to Equation 1.

13.2.2.3 Controls[18-22]

A wide variety of options exist to control emissions from unpaved roads. Options fall into the following three groupings:

1. Vehicle restrictions that limit the speed, weight or number of vehicles on the road;

2. Surface improvement, by measures such as (a) paving or (b) adding gravel or slag to a dirt road; and
3. Surface treatment, such as watering or treatment with chemical dust suppressants.

Available control options span broad ranges in terms of cost, efficiency, and applicability. For example, traffic controls provide moderate emission reductions (often at little cost) but are difficult to enforce. Although paving is highly effective, its high initial cost is often prohibitive. Furthermore, paving is not feasible for industrial roads subject to very heavy vehicles and/or spillage of material in transport. Watering and chemical suppressants, on the other hand, are potentially applicable to most industrial roads at moderate to low costs. However, these require frequent reapplication to maintain an acceptable level of control. Chemical suppressants are generally more cost-effective than water but not in cases of temporary roads (which are common at mines, landfills, and construction sites). In summary, then, one needs to consider not only the type and volume of traffic on the road but also how long the road will be in service when developing control plans.

Vehicle restrictions. These measures seek to limit the amount and type of traffic present on the road or to lower the mean vehicle speed. For example, many industrial plants have restricted employees from driving on plant property and have instead instituted bussing programs. This eliminates emissions due to employees traveling to/from their worksites. Although the heavier average vehicle weight of the busses increases the base emission factor, the decrease in vehicle-miles-traveled results in a lower overall emission rate.

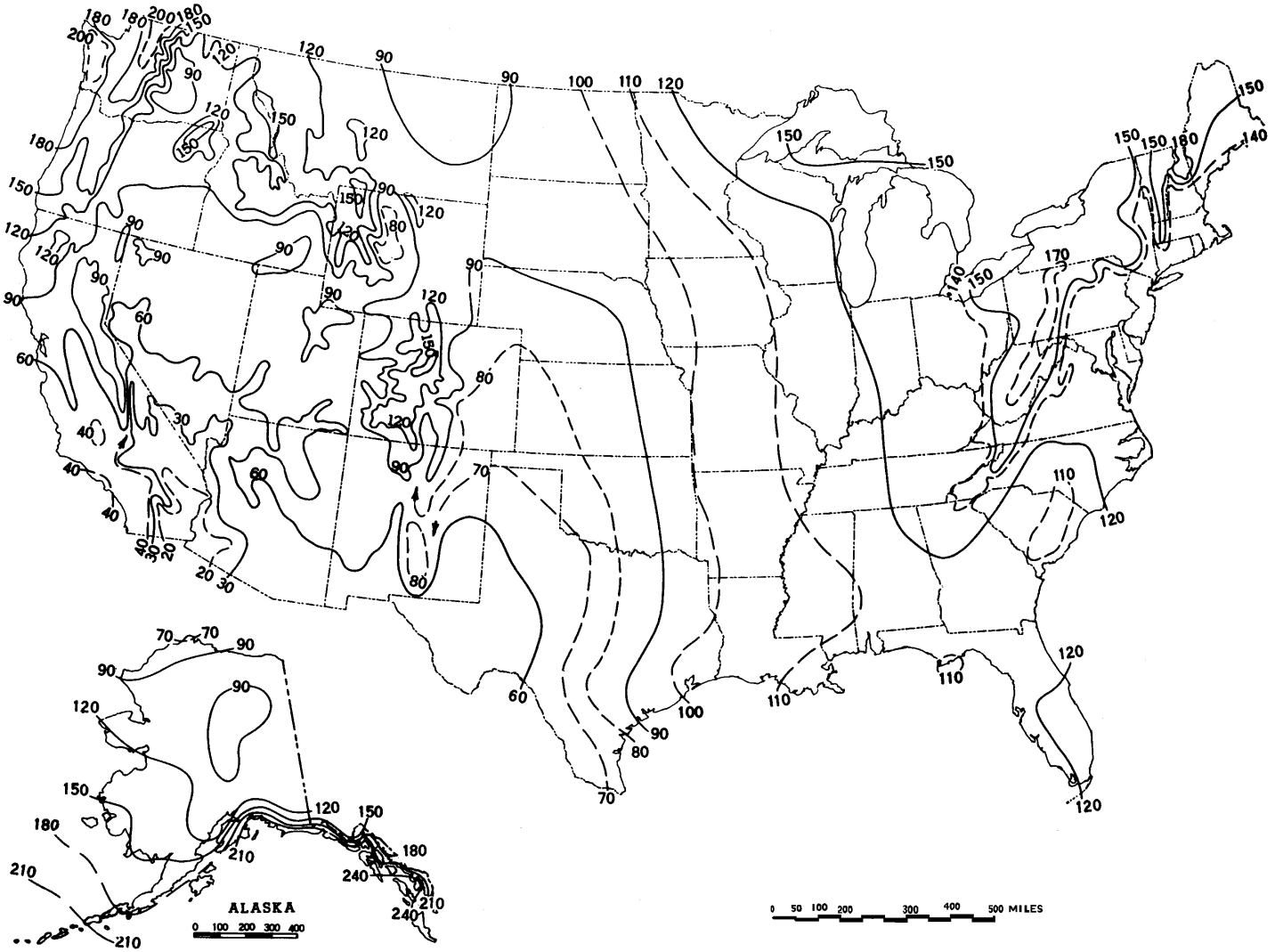

Figure 13.2.2-1. Mean number of days with 0.01 inch or more of precipitation in United States.

Surface improvements. Control options in this category alter the road surface. As opposed to the "surface treatments" discussed below, improvements are relatively "permanent" and do not require periodic retreatment.

The most obvious surface improvement is paving an unpaved road. This option is quite expensive and is probably most applicable to relatively short stretches of unpaved road with at least several hundred vehicle passes per day. Furthermore, if the newly paved road is located near unpaved areas or is used to transport material, it is essential that the control plan address routine cleaning of the newly paved road surface.

The control efficiencies achievable by paving can be estimated by comparing emission factors for unpaved and paved road conditions. The predictive emission factor equation for paved roads, given in Section 13.2.1, requires estimation of the silt loading on the traveled portion of the paved surface, which in turn depends on whether the pavement is periodically cleaned. Unless curbing is to be installed, the effects of vehicle excursion onto unpaved shoulders (berms) also must be taken into account in estimating the control efficiency of paving.

Other improvement methods cover the road surface with another material that has a lower silt content. Examples include placing gravel or slag on a dirt road. Control efficiency can be estimated by comparing the emission factors obtained using the silt contents before and after improvement. The silt content of the road surface should be determined after 3 to 6 months rather than immediately following placement. Control plans should address regular maintenance practices, such as grading, to retain larger aggregate on the traveled portion of the road.

Surface treatments refer to control options which require periodic reapplication. Treatments fall into the two main categories of (a) "wet suppression" (i. e., watering, possibly with surfactants or other additives), which keeps the road surface wet to control emissions and (b) "chemical stabilization/ treatment", which attempts to change the physical characteristics of the surface. The necessary reapplication frequency varies from several minutes for plain water under summertime conditions to several weeks or months for chemical dust suppressants.

Watering increases the moisture content, which conglomerates particles and reduces their likelihood to become suspended when vehicles pass over the surface. The control efficiency depends on how fast the road dries after water is added. This in turn depends on (a) the amount (per unit road surface area) of water added during each application; (b) the period of time between applications; (c) the weight, speed and number of vehicles traveling over the watered road during the period between applications; and (d) meteorological conditions (temperature, wind speed, cloud cover, etc.) that affect evaporation during the period.

Figure 13.2.2-2 presents a simple bilinear relationship between the instantaneous control efficiency due to watering and the resulting increase in surface moisture. The moisture ratio "M" (i.e., the x-axis in Figure 13.2.2-2) is found by dividing the surface moisture content of the watered road by the surface moisture content of the uncontrolled road. As the watered road surface dries, both the ratio M and the predicted instantaneous control efficiency (i.e., the y-axis in the figure) decrease. The figure shows that between the uncontrolled moisture content and a value twice as large, a small increase in moisture content results in a large increase in control efficiency. Beyond that, control efficiency grows slowly with increased moisture content.

Given the complicated nature of how the road dries, characterization of emissions from watered roadways is best done by collecting road surface material samples at various times between water truck passes. (Appendices C.1 and C.2 present the sampling and analysis procedures.) The moisture content measured can then be associated with a control efficiency by use of Figure 13.2.2-2. Samples that reflect average conditions during the watering cycle can take the form of either a series of samples between water applications or a single sample at the midpoint. It is essential that samples be collected during periods with active traffic on the road. Finally, because of different evaporation rates, it is recommended that samples be collected at various times during the year. If only one set of samples is to be collected, these must be collected during hot, summertime conditions.

When developing watering control plans for roads that do not yet exist, it is strongly recommended that the moisture cycle be established by sampling similar roads in the same geographic area. If the moisture cycle cannot be established by similar roads using established watering control plans, the more complex methodology used to estimate the mitigation of rainfall and other precipitation can be used to estimate the control provided by routine watering. An estimate of the maximum daytime Class A pan evaporation (based upon daily evaporation data published in the monthly Climatological Data for the state by the National Climatic Data Center) should be used to insure that adequate watering capability is available during periods of highest evaporation. The hourly precipitation values in the spreadsheet should be replaced with the equivalent inches of precipitation (where the equivalent of 1 inch of precipitation is provided by an application of 5.6 gallons of water per square yard of road). Information on the long term average annual evaporation and on the percentage that occurs between May and October was published in the Climatic Atlas (Reference 16). Figure 13.2.2-3 presents the geographical distribution for "Class A pan evaporation" throughout the United States. Figure 13.2.2-4 presents the geographical distribution of the percentage of this evaporation that occurs between May and October. The U. S. Weather Bureau Class A evaporation pan is a cylindrical metal container with a depth of 10 inches and a diameter of 48 inches. Periodic measurements are made of the changes of the water level.

The above methodology should be used only for prospective analyses and for designing watering programs for existing roadways. The quality rating of an emission factor for a watered road that is based on this methodology should be downgraded two letters. Periodic road surface samples should be collected and analyzed to verify the efficiency of the watering program.

As opposed to watering, chemical dust suppressants have much less frequent reapplication requirements. These materials suppress emissions by changing the physical characteristics of the existing road surface material. Many chemical unpaved road dust suppressants form a hardened surface that binds particles together. After several applications, a treated road often resembles a paved road except that the surface is not uniformly flat. Because the improved surface results in more grinding of small particles, the silt content of loose material on a highly controlled surface may be substantially higher than when the surface was uncontrolled. For this reason, the models presented as Equations 1a and 1b cannot be used to estimate emissions from chemically stabilized roads. Should the road be allowed to return to an

uncontrolled state with no visible signs of large-scale cementing of material, the Equation 1a and 1b emission factors could then be used to obtain conservatively high emission estimates.

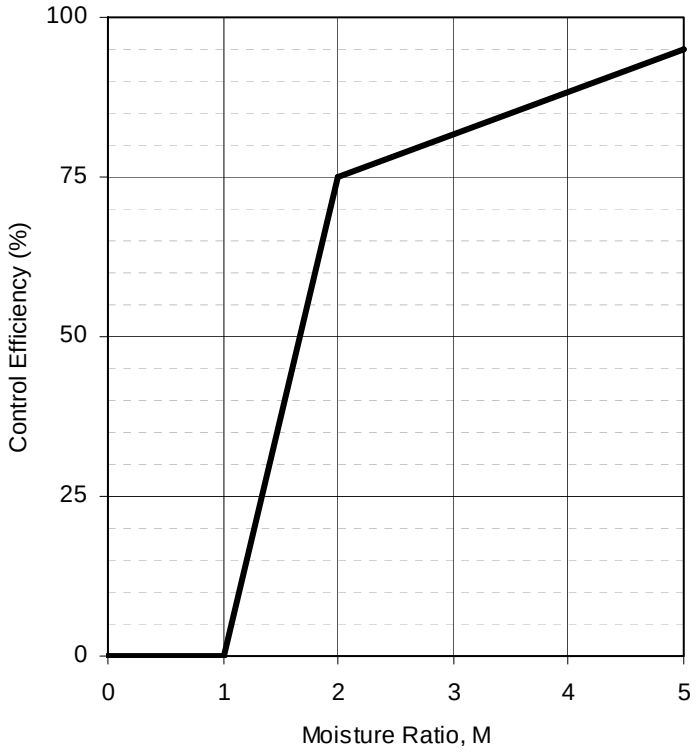

Figure 13.2.2-2. Watering control effectiveness for unpaved travel surfaces

The control effectiveness of chemical dust suppressants appears to depend on (a) the dilution rate used in the mixture; (b) the application rate (volume of solution per unit road surface area); (c) the time between applications; (d) the size, speed and amount of traffic during the period between applications; and (e) meteorological conditions (rainfall, freeze/thaw cycles, etc.) during the period. Other factors that affect the performance of dust suppressants include other traffic characteristics (e. g., cornering, track-on from unpaved areas) and road characteristics (e. g., bearing strength, grade). The variabilities in the above factors and differences between individual dust control products make the control efficiencies of chemical dust suppressants difficult to estimate. Past field testing of emissions from controlled unpaved roads has shown that chemical dust suppressants provide a PM-10 control efficiency of about 80 percent when applied at regular intervals of 2 weeks to 1 month.

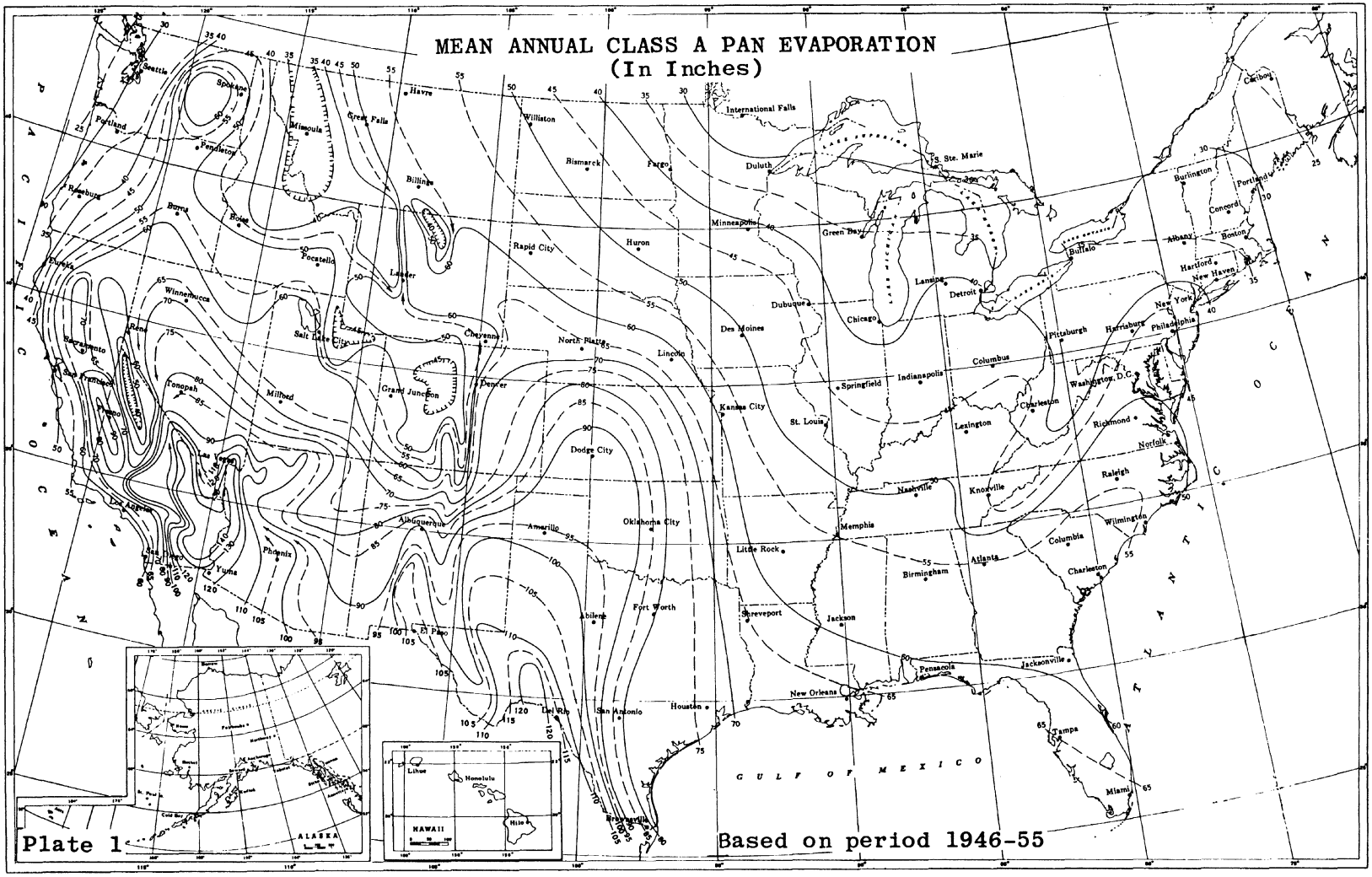

Figure 13.2.2-3. Annual evaporation data.

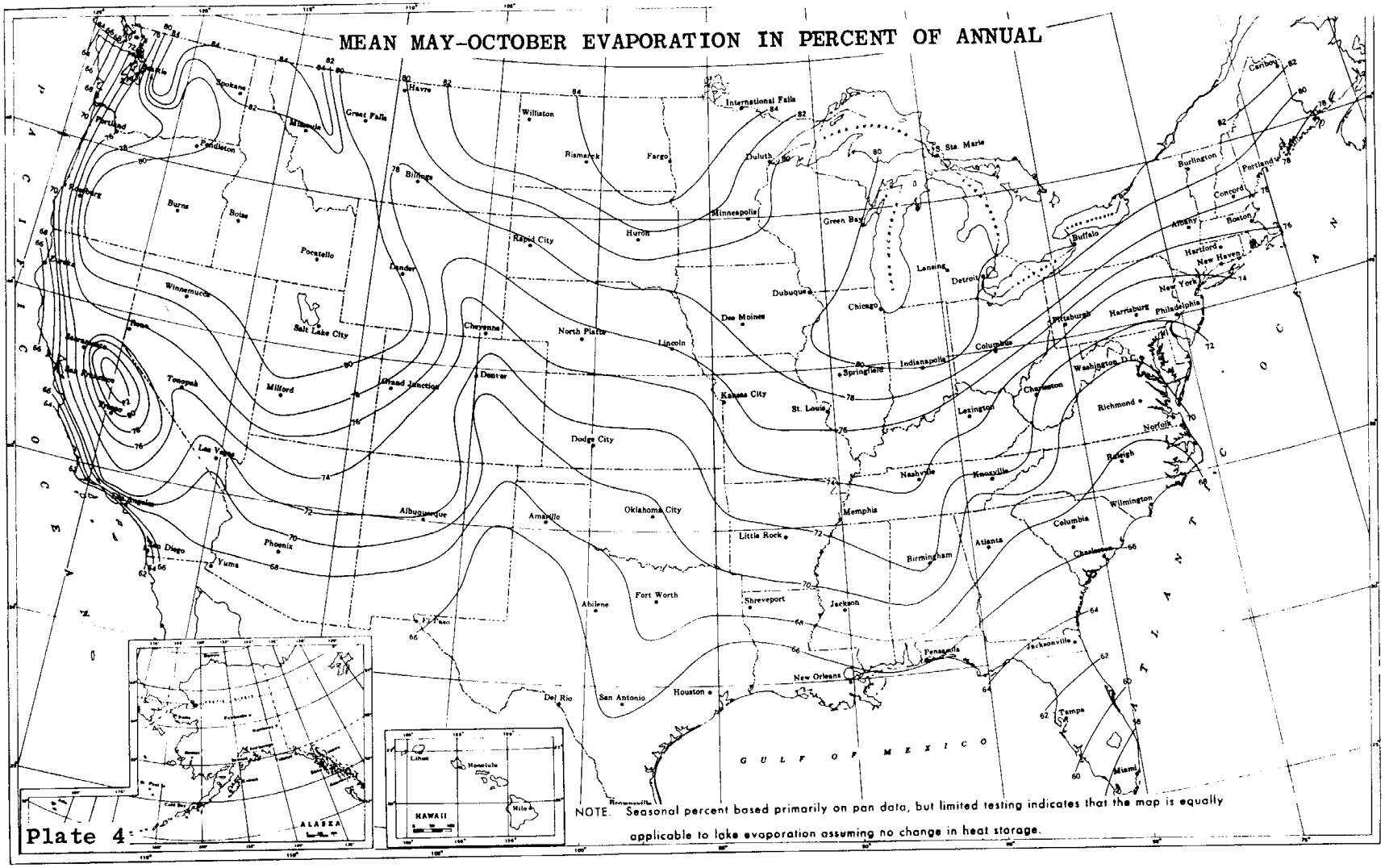

Figure 13.2.2-4. Geographical distribution of the percentage of evaporation occurring between May and October.

Petroleum resin products historically have been the dust suppressants (besides water) most widely used on industrial unpaved roads. Figure 13.2.2-5 presents a method to estimate average control efficiencies associated with petroleum resins applied to unpaved roads.[20] Several items should be noted:

1. The term "ground inventory" represents the total volume (per unit area) of petroleum resin concentrate (*not solution*) applied since the start of the dust control season.

2. Because petroleum resin products must be periodically reapplied to unpaved roads, the use of a time-averaged control efficiency value is appropriate. Figure 13.2.2-5 presents control efficiency values averaged over two common application intervals, 2 weeks and 1 month. Other application intervals will require interpolation.

3. Note that zero efficiency is assigned until the ground inventory reaches 0.05 gallon per square yard (gal/yd^2). Requiring a minimum ground inventory ensures that one must apply a reasonable amount of chemical dust suppressant to a road before claiming credit for emission control. Recall that the ground inventory refers to the amount of petroleum resin concentrate rather than the total solution.

As an example of the application of Figure 13.2.2-5, suppose that Equation 1a was used to estimate an emission factor of 7.1 lb/VMT for PM-10 from a particular road. Also, suppose that, starting on May 1, the road is treated with 0.221 gal/yd^2 of a solution (1 part petroleum resin to 5 parts water) on the first of each month through September. Then, the average controlled emission factors, shown in Table 13.2.2-5, are found.

Table 13.2-2-5. EXAMPLE OF AVERAGE CONTROLLED EMISSION FACTORS FOR SPECIFIC CONDITIONS

Period	Ground Inventory, gal/yd^2	Average Control Efficiency, %[a]	Average Controlled Emission Factor, lb/VMT
May	0.037	0	7.1
June	0.073	62	2.7
July	0.11	68	2.3
August	0.15	74	1.8
September	0.18	80	1.4

[a] From Figure 13.2.2-5, $\leq$10 µm. Zero efficiency assigned if ground inventory is less than 0.05 gal/yd^2. 1 lb/VMT = 281.9 g/VKT. 1 gal/yd^2 = 4.531 L/m^2.

Besides petroleum resins, other newer dust suppressants have also been successful in controlling emissions from unpaved roads. Specific test results for those chemicals, as well as for petroleum resins and watering, are provided in References 18 through 21.

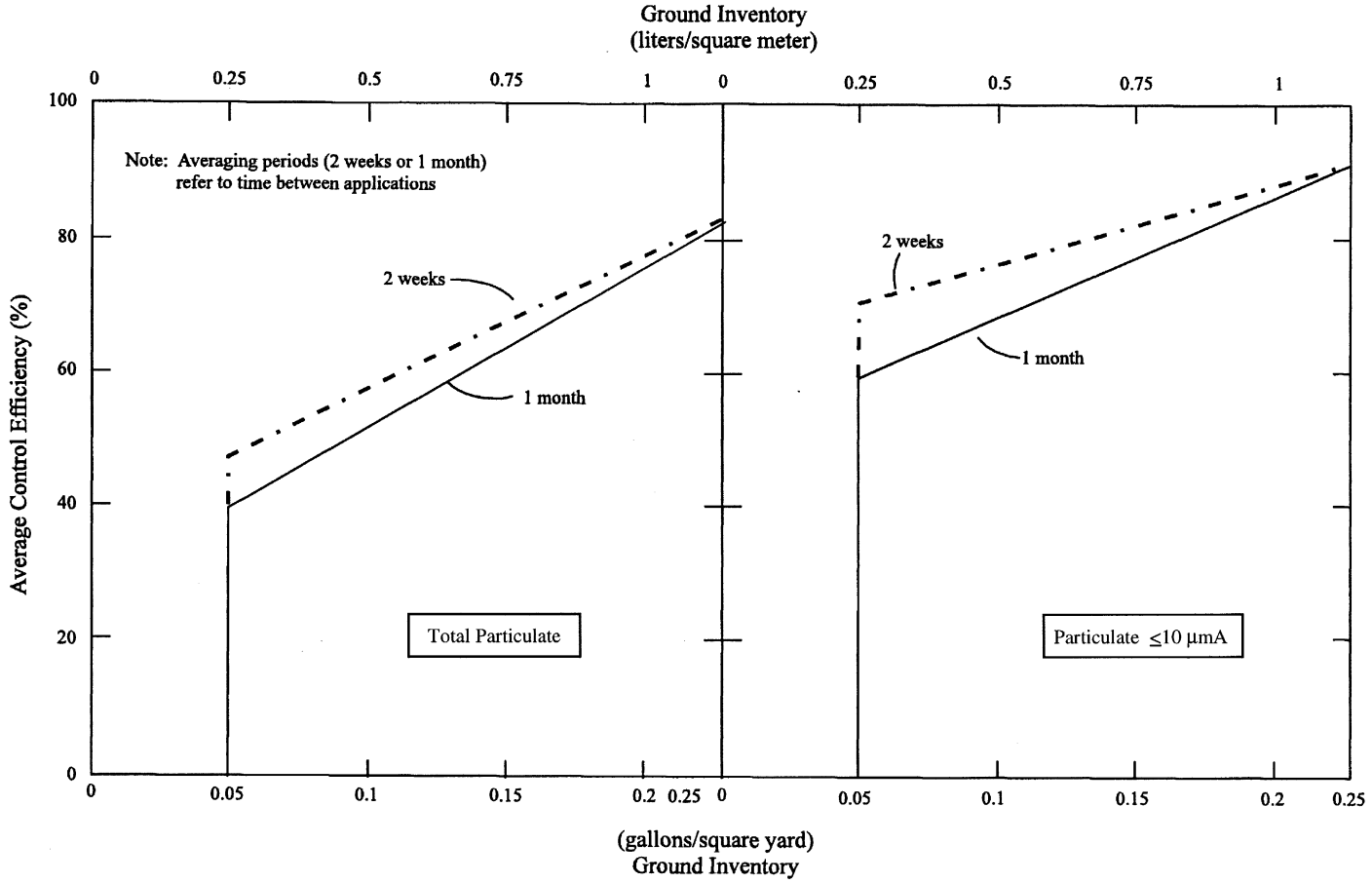

Figure 13.2.2-5. Average control efficiencies over common application intervals.

13.2.2.4 Updates Since The Fifth Edition

The Fifth Edition was released in January 1995. Revisions to this section since that date are summarized below. For further detail, consult the background report for this section (Reference 6).

October 1998 (Supplement E)– This was a major revision of this section. Significant changes to the text and the emission factor equations were made.

October 2001 – Separate emission factors for unpaved surfaces at industrial sites and publicly accessible roads were introduced. Figure 13.2.2-2 was included to provide control effectiveness estimates for watered roads.

December 2003 – The public road emission factor equation (equation 1b) was adjusted to remove the component of particulate emissions from exhaust, brake wear, and tire wear. The parameter C in the new equation varies with aerodynamic size range of the particulate matter. Table 13.2.2-4 was added to present the new coefficients.

January 2006 – The PM-2.5 particle size multipliers (i.e., factors) in Table 13.2.2-2 were modified and the quality ratings were upgraded from C to B based on the wind tunnel studies of a variety of dust emitting surface materials.

References For Section 13.2.2

1. C. Cowherd, Jr., *et al., Development Of Emission Factors For Fugitive Dust Sources*, EPA-450/3-74-037, U. S. Environmental Protection Agency, Research Triangle Park, NC, June 1974.

2. R. J. Dyck and J. J. Stukel, "Fugitive Dust Emissions From Trucks On Unpaved Roads", *Environmental Science And Technology, 10*(10):1046-1048, October 1976.

3. R. O. McCaldin and K. J. Heidel, "Particulate Emissions From Vehicle Travel Over Unpaved Roads", Presented at the 71st Annual Meeting of the Air Pollution Control Association, Houston, TX, June 1978.

4. C. Cowherd, Jr, *et al., Iron And Steel Plant Open Dust Source Fugitive Emission Evaluation*, EPA-600/2-79-013, U. S. Environmental Protection Agency, Cincinnati, OH, May 1979.

5. G. Muleski, *Unpaved Road Emission Impact*, Arizona Department of Environmental Quality, Phoenix, AZ, March 1991.

6. *Emission Factor Documentation For AP-42, Section 13.2.2, Unpaved Roads, Final Report*, Midwest Research Institute, Kansas City, MO, September 1998.

7. T. Cuscino, Jr., *et al., Taconite Mining Fugitive Emissions Study*, Minnesota Pollution Control Agency, Roseville, MN, June 1979.

8. *Improved Emission Factors For Fugitive Dust From Western Surface Coal Mining Sources*, 2 Volumes, EPA Contract No. 68-03-2924, Office of Air Quality Planning and Standards, U. S. Environmental Protection Agency, Research Triangle Park, NC.

9. T. Cuscino, Jr., *et al., Iron And Steel Plant Open Source Fugitive Emission Control Evaluation*, EPA-600/2-83-110, U. S. Environmental Protection Agency, Cincinnati, OH, October 1983.

10. *Size Specific Emission Factors For Uncontrolled Industrial And Rural Roads*, EPA Contract No. 68-02-3158, Midwest Research Institute, Kansas City, MO, September 1983.

11. C. Cowherd, Jr., and P. Englehart, *Size Specific Particulate Emission Factors For Industrial And Rural Roads*, EPA-600/7-85-038, U. S. Environmental Protection Agency, Cincinnati, OH, September 1985.

12. *PM-10 Emission Inventory Of Landfills In The Lake Calumet Area*, EPA Contract 68-02-3891, Work Assignment 30, Midwest Research Institute, Kansas City, MO, September 1987.

13. *Chicago Area Particulate Matter Emission Inventory — Sampling And Analysis*, EPA Contract No. 68-02-4395, Work Assignment 1, Midwest Research Institute, Kansas City, MO, May 1988.

14. *PM-10 Emissions Inventory Data For The Maricopa And Pima Planning Areas*, EPA Contract No. 68-02-3888, Engineering-Science, Pasadena, CA, January 1987.

15. *Oregon Fugitive Dust Emission Inventory*, EPA Contract 68-D0-0123, Midwest Research Institute, Kansas City, MO, January 1992.

16. *Climatic Atlas Of The United States*, U. S. Department Of Commerce, Washington, DC, June 1968.

17. National Climatic Data Center, *Solar And Meteorological Surface Observation Network 1961-1990*; 3 Volume CD-ROM. Asheville, NC, 1993.

18. C. Cowherd, Jr. *et al., Control Of Open Fugitive Dust Sources*, EPA-450/3-88-008, U. S. Environmental Protection Agency, Research Triangle Park, NC, September 1988.

19. G. E. Muleski, *et al., Extended Evaluation Of Unpaved Road Dust Suppressants In The Iron And Steel Industry*, EPA-600/2-84-027, U. S. Environmental Protection Agency, Cincinnati, OH, February 1984.

20. C. Cowherd, Jr., and J. S. Kinsey, *Identification, Assessment And Control Of Fugitive Particulate Emissions*, EPA-600/8-86-023, U. S. Environmental Protection Agency, Cincinnati, OH, August 1986.

21. G. E. Muleski and C. Cowherd, Jr., *Evaluation Of The Effectiveness Of Chemical Dust Suppressants On Unpaved Roads*, EPA-600/2-87-102, U. S. Environmental Protection Agency, Cincinnati, OH, November 1986.

22. *Fugitive Dust Background Document And Technical Information Document For Best Available Control Measures*, EPA-450/2-92-004, Office Of Air Quality Planning And Standards, U. S. Environmental Protection Agency, Research Triangle Park, NC, September 1992.

23. Written communication (Technical Memorandum) from P. Hemmer, E.H. Pechan & Associates, Inc., Durham, NC to B. Kuykendal, U. S. Environmental Protection Agency, Research Triangle Park, NC, August, 21, 2003.

24. MOBILE6 User Guide, United States Environmental Protection Agency, Office of Transportation and Air Quality. EPA420-R-02-028, October 2002.

25. Written communication (Technical Memorandum) from G. Muleski, Midwest Research Institute, Kansas City, MO, to B. Kuykendal, U. S. Environmental Protection Agency, Research Triangle Park, NC, Subject "Unpaved Roads", September 27, 2001.

26. Written communication (Technical Memorandum) from W. Kuykendal, U. S. Environmental Protection Agency, to File, Subject "Decisions on Final AP-42 Section 13.2.2 Unpaved Roads", November 24, 2003.

27. C. Cowherd, *Background Document for Revisions to Fine Fraction Ratios &sed for AP-42 Fugitive Dust Emission Factors*. Prepared by Midwest Research Institute for Western Governors Association, Western Regional Air Partnership, Denver, CO, February 1, 2006.

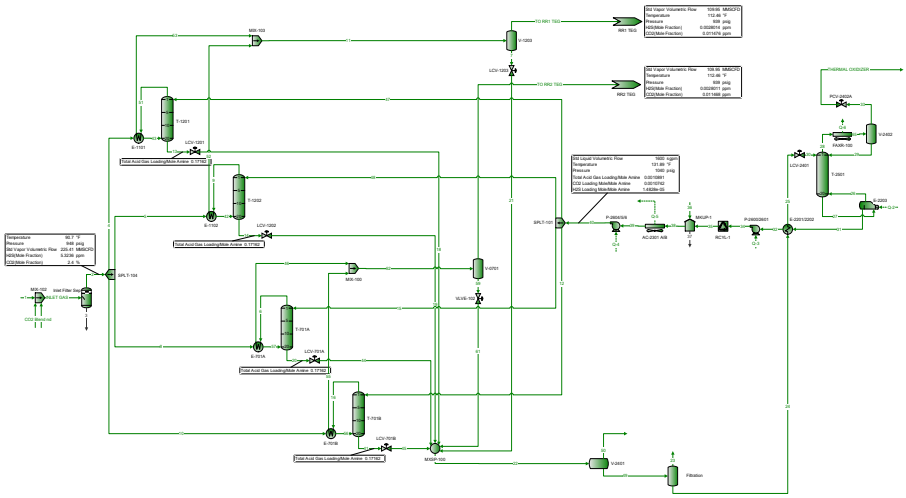

Temperature 80.7 °F
Pressure 949 psig
Std Vapor Volumetric Flow 225.41 MMSCFD
H2S(Mole Fraction) 3.3236 ppm
CO2(Mole Fraction) 2.4 %
SPLT-104
MIX-102
Inlet Filter Sep
INLET GAS
CO2 Stretch
MIX-103
E-1301
T-1301
LCV-1301
Total Acid Gas Loading/Mole Amine: 0.17182
E-1302
T-1302
LCV-1302
Total Acid Gas Loading/Mole Amine: 0.17182
MIX-100
E-701A
T-701A
LCV-701A
Total Acid Gas Loading/Mole Amine: 0.17182
E-701B
T-701B
LCV-701B
Total Acid Gas Loading/Mole Amine: 0.17182
MIXSP-100
V-701
VLVE-100
V-1303
LCV-1303
TO RR1 TEG
RR1 TEG
Std Vapor Volumetric Flow 109.99 MMSCFD
Temperature 112.46 °F
Pressure 939 psig
H2S(Mole Fraction) 0.0028016 ppm
CO2(Mole Fraction) 0.011458 ppm
TO RR2 TEG
RR2 TEG
Std Vapor Volumetric Flow 109.99 MMSCFD
Temperature 112.46 °F
Pressure 939 psig
H2S(Mole Fraction) 0.0028011 ppm
CO2(Mole Fraction) 0.011458 ppm
SPLT-101
P-2600/0/0
AC-2301 A/B
MIXUP-1
RC1L-1
P-2600/2601
E-2201/2202
LCV-2401
T-2401
E-2203
PCV-2403A
FAXR-100
V-2402
THERMAL OXIDIZER
V-2401
Filtration

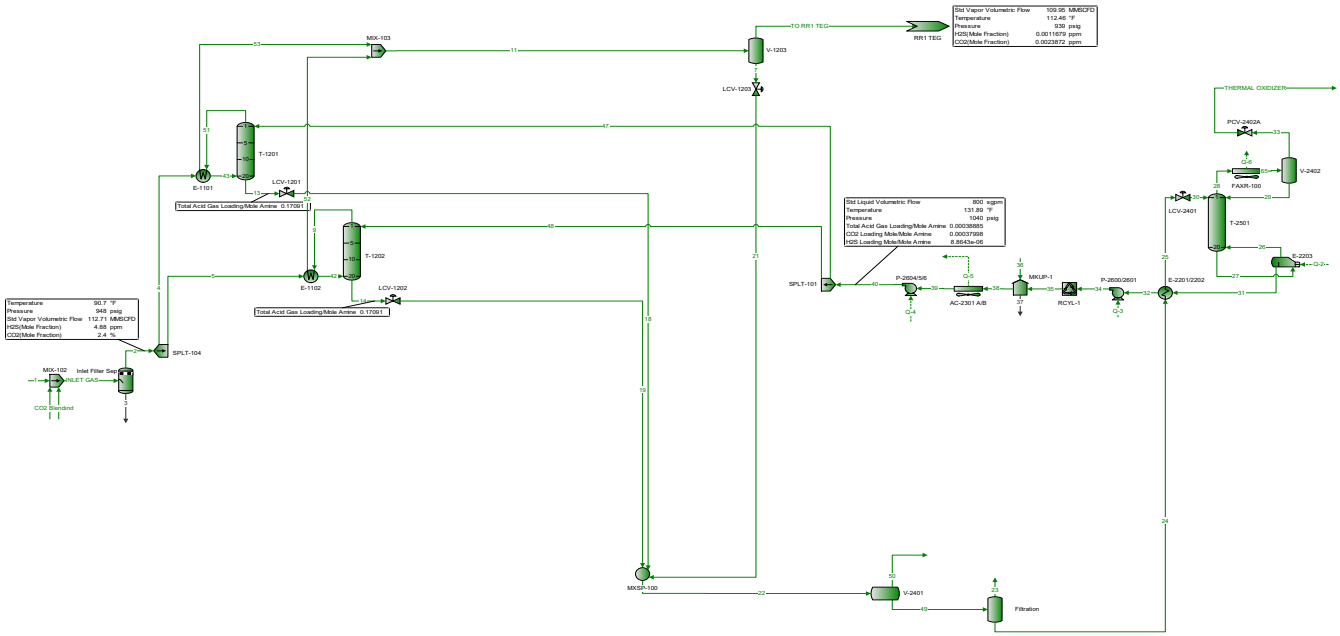
Std Vapor Volumetric Flow 109.95 MMSCFD
Temperature 112.46 °F
Pressure 939 psig
H2S(Mole Fraction) 0.0011679 ppm
CO2(Mole Fraction) 0.0023872 ppm
TO RR1 TEG
RR1 TEG
MIX-103
V-1203
LCV-1203
THERMAL OXIDIZER
PCV-2402A
V-2402
FAXR-100
T-1201
E-1101
LCV-1201
Total Acid Gas Loading/Mole Amine 0.17091
T-1202
E-1102
LCV-1202
Total Acid Gas Loading/Mole Amine 0.17091
Std Liquid Volumetric Flow 800 sgpm
Temperature 131.89 °F
Pressure 1040 psig
Total Acid Gas Loading/Mole Amine 0.00038885
CO2 Loading Mole/Mole Amine 0.00037998
H2S Loading Mole/Mole Amine 8.8543e-06
SPLT-101
P-2604/5/6
AC-2301A/B
MKUP-1
RCYL-1
P-2600/2601
E-2301/2202
LCV-2401
T-2501
E-2203
Temperature 90.7 °F
Pressure 948 psig
Std Vapor Volumetric Flow 112.71 MMSCFD
H2S(Mole Fraction) 4.88 ppm
CO2(Mole Fraction) 2.4 %
SPLT-104
MIX-102
Inlet Filter Sep
INLET GAS
CO2 Blendnd
MIXER-100
V-2401
Filtration

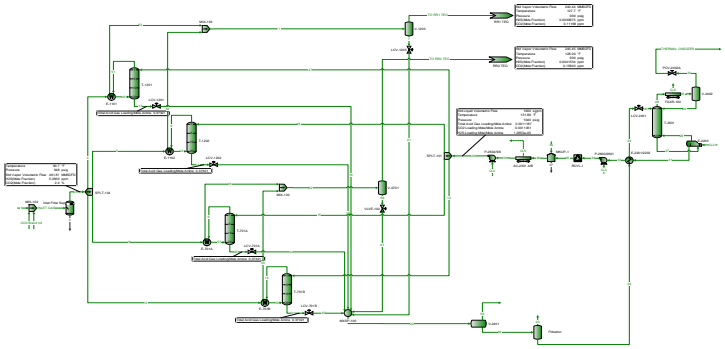

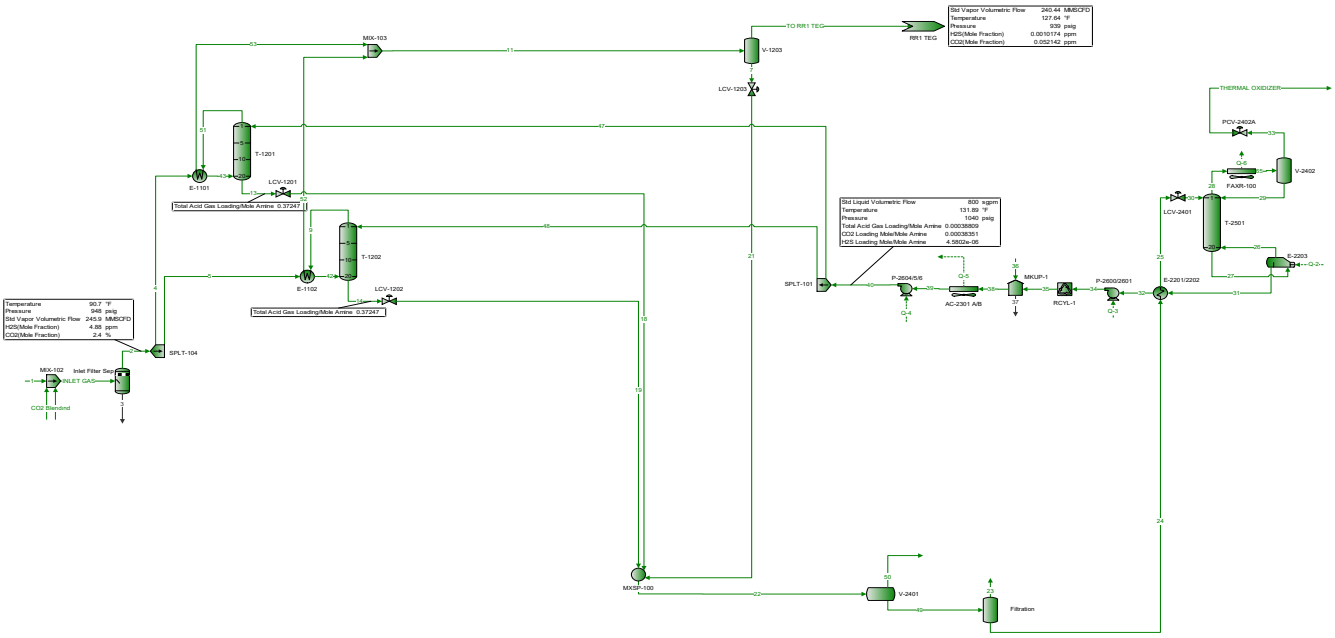
Std Vapor Volumetric Flow 240.44 MMSCFD
Temperature 127.64 °F
Pressure 939 psig
H2S(Mole Fraction) 0.00010174 ppm
CO2(Mole Fraction) 0.052142 ppm
TO RR1 TEG
RR1 TEG
MIX-103
V-1203
LCV-1203
THERMAL OXIDIZER
PCV-2402A
V-2402
FAXR-100
T-1201
LCV-1201
E-1101
Total Acid Gas Loading/Mole Amine 0.37247
T-1202
E-1102
LCV-1202
Total Acid Gas Loading/Mole Amine 0.37247
Std Liquid Volumetric Flow 800 sgpm
Temperature 131.89 °F
Pressure 1040 psig
Total Acid Gas Loading/Mole Amine 0.00038809
CO2 Loading Mole/Mole Amine 0.00038351
H2S Loading Mole/Mole Amine 4.5802e-05
SPLT-101
P-2604/5/6
AC-2301 A/B
MKUP-1
RCYL-1
P-2600/2601
E-2201/2202
LCV-2401
T-2501
E-2303
Temperature 90.7 °F
Pressure 948 psig
Std Vapor Volumetric Flow 245.9 MMSCFD
H2S(Mole Fraction) 4.88 ppm
CO2(Mole Fraction) 2.4 %
SPLT-104
MIX-102
Inlet Filter Sep
INLET GAS
CO2 Blendind
MIX3P-100
V-2401
Filtration

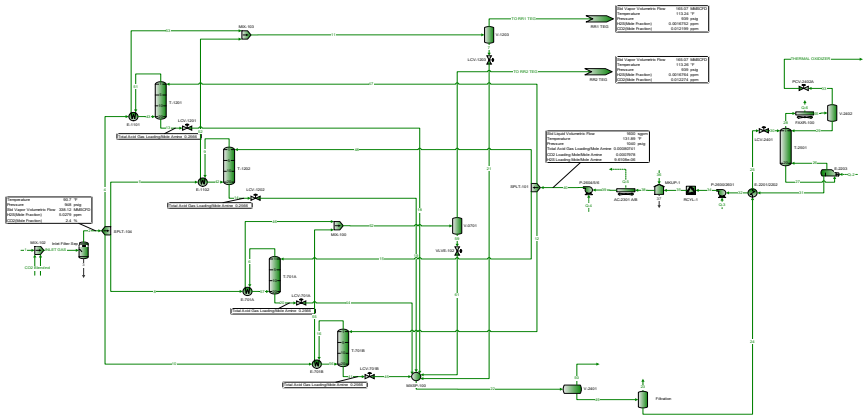
Wet Vapor Volumetric Flow 1615.07 MMSCFD
Temperature 113.24 °F
Pressure 5026 psig
H2S(Mole Fraction) 0.0019742 ppm
CO2(Mole Fraction) 0.0121356 ppm
TO RR1 TEG
RR1 TEG
LCV-1203
TO RR2 TEG
RR2 TEG
Wet Vapor Volumetric Flow 1615.07 MMSCFD
Temperature 113.24 °F
Pressure 5026 psig
H2S(Mole Fraction) 0.0019782 ppm
CO2(Mole Fraction) 0.0121214 ppm
MAIL-103
R-1203
R-1201
LCV-1201
R-1202
LCV-1202
R-1701A
LCV-1701A
R-1701B
LCV-1701B
MAIL-102
V-1701
VLVE-102
MAIL-101
Inlet Filter Separator
SPLIT-104
Temperature 90.8 °F
Pressure 5040 psig
Wet Vapor Volumetric Flow 334.12 MMSCFD
H2S(Mole Fraction) 0.0279 ppm
CO2(Mole Fraction) 2.4 %
Wet Liquid Volumetric Flow 1600 sgpm
Temperature 112.66 °F
Pressure 5040 psig
Total Acid Gas Loading/Mole Amine 0.0000763
Total Loading/MonoMeta Amine 0.0000763
Total Loading/MonoMeta Amine 0.0104e-06
SPLT-103
P-2004/5/6
AC-2301 A/B
MIXJP-1
RCYL-1
P-2000/2001
MIXT-102/02
THERMAL OXIDIZER
PCV-2402A
PCV-2402B
V-2402
LCV-2401
T-2401
E-2002
E-2001
V-2401
Filtration

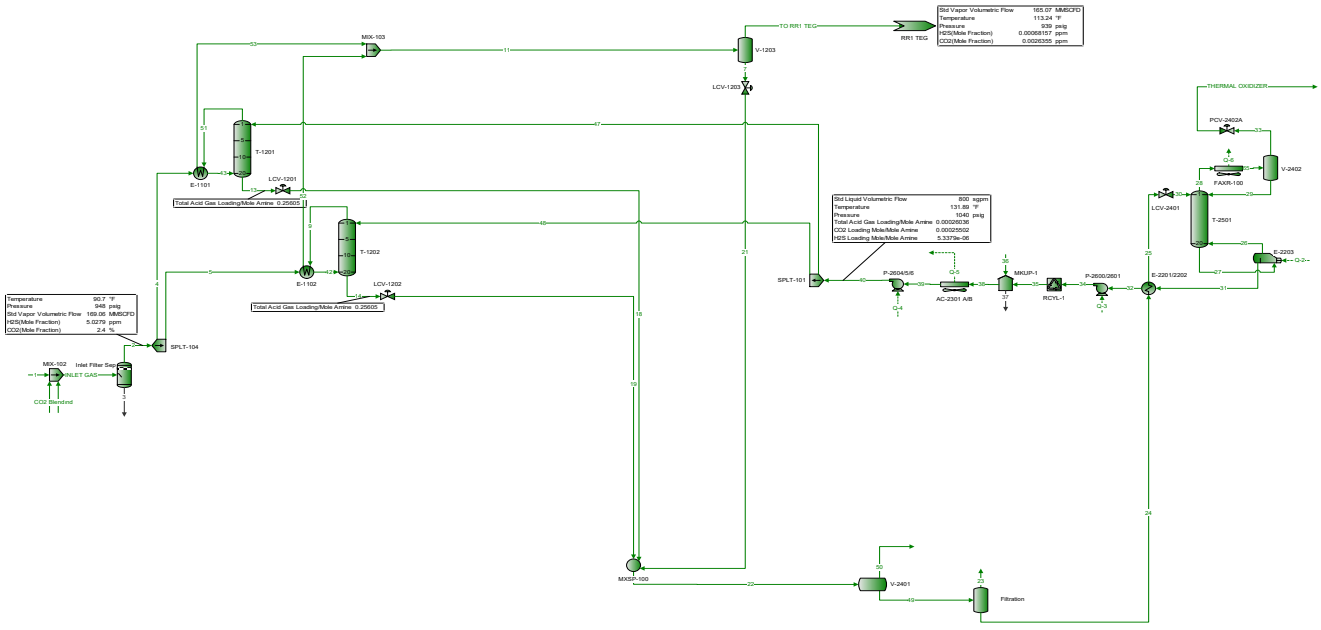
Std Vapor Volumetric Flow 165.07 MMSCFD
Temperature 113.24 °F
Pressure 939 psig
H2S(Mole Fraction) 0.00068157 ppm
CO2(Mole Fraction) 0.0026395 ppm
TO RR1 TEG
RR1 TEG
MIX-103
V-1203
LCV-1203
THERMAL OXIDIZER
PCV-2402A
V-2402
FAXR-100
T-1201
E-1101
LCV-1201
Total Acid Gas Loading/Mole Amine 0.25605
T-1202
E-102
LCV-1202
Total Acid Gas Loading/Mole Amine 0.25605
Std Liquid Volumetric Flow 800 sgpm
Temperature 131.89 °F
Pressure 1040 psig
Total Acid Gas Loading/Mole Amine 0.000260536
CO2 Loading Mole/Mole Amine 0.000255502
H2S Loading Mole/Mole Amine 5.3379e-06
LCV-2401
T-2501
E-2203
SPLT-101
P-2604/5/6
AC-2301 A/B
MKUP-1
RCYL-1
P-2600/2601
E-2201/2202
Temperature 90.7 °F
Pressure 948 psig
Std Vapor Volumetric Flow 169.06 MMSCFD
H2S(Mole Fraction) 5.0279 ppm
CO2(Mole Fraction) 2.4 %
SPLT-104
MIX-102
Inlet Filter Sep
INLET GAS
CO2 Blend/nd
MIXER-100
V-2401
Filtration

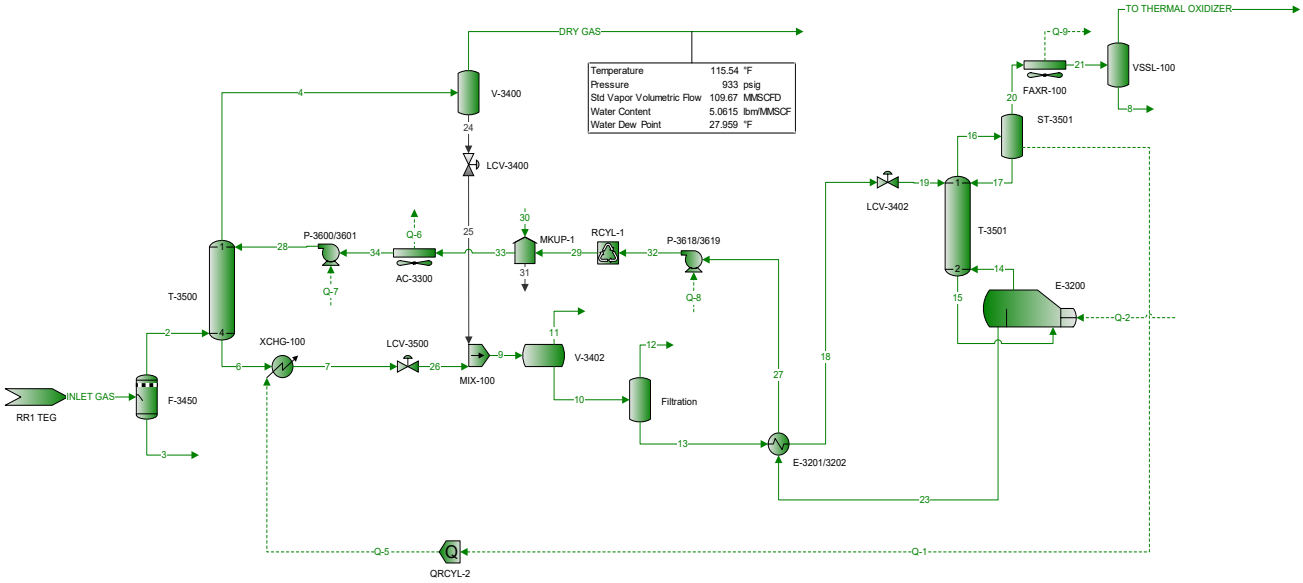
TO THERMAL OXIDIZER
DRY GAS
Temperature 115.54 °F
Pressure 933 psig
Std Vapor Volumetric Flow 109.67 MMSCFD
Water Content 5.0615 lbm/MMSCF
Water Dew Point 27.959 °F
V-3400
LCV-3400
P-3600/3601
Q-6
AC-3300
MKUP-1
RCYL-1
P-3618/3619
Q-7
Q-8
T-3500
XCHG-100
LCV-3500
MIX-100
V-3402
Filtration
E-3201/3202
LCV-3402
T-3501
ST-3501
FAXR-100
Q-9
VSSL-100
E-3200
Q-2
INLET GAS
RR1 TEG
F-3450
Q-5
QRCYL-2
Q-1

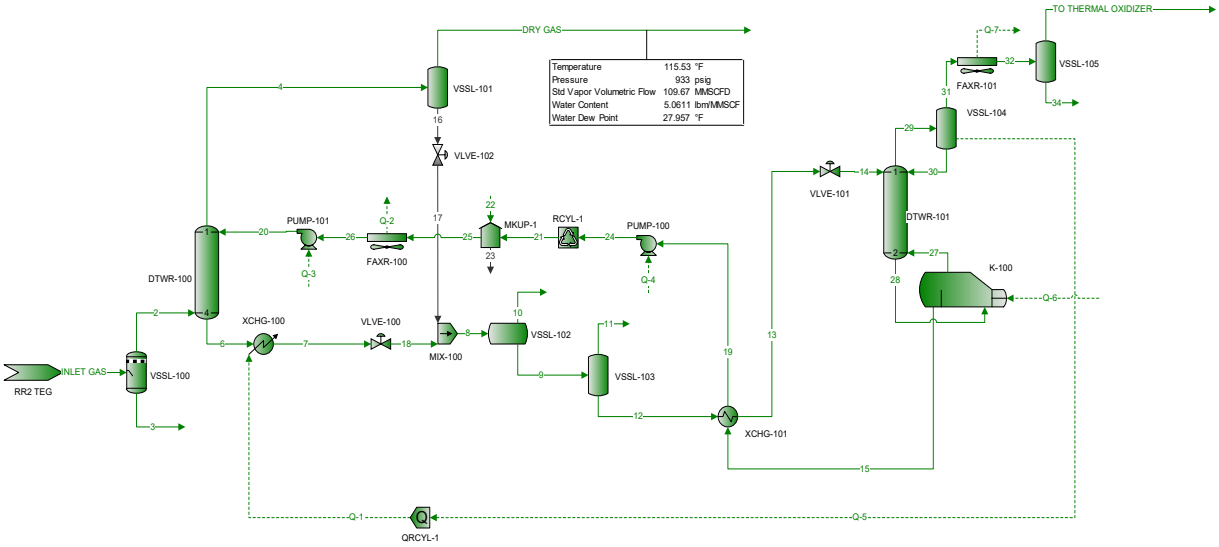
DRY GAS
TO THERMAL OXIDIZER
Temperature 115.53 °F
Pressure 933 psig
Std Vapor Volumetric Flow 109.67 MMSCFD
Water Content 5.0611 lbm/MMSCF
Water Dew Point 27.957 °F
VSSL-101
VLVE-102
VLVE-101
VSSL-104
VSSL-105
FAXR-101
DTWR-101
DTWR-100
PUMP-101
PUMP-100
FAXR-100
MKUP-1
RCYL-1
K-100
XCHG-100
VLVE-100
MIX-100
VSSL-102
VSSL-103
XCHG-101
VSSL-100
INLET GAS
RR2 TEG
QRCYL-1
Q-1
Q-2
Q-3
Q-4
Q-5
Q-6
Q-7

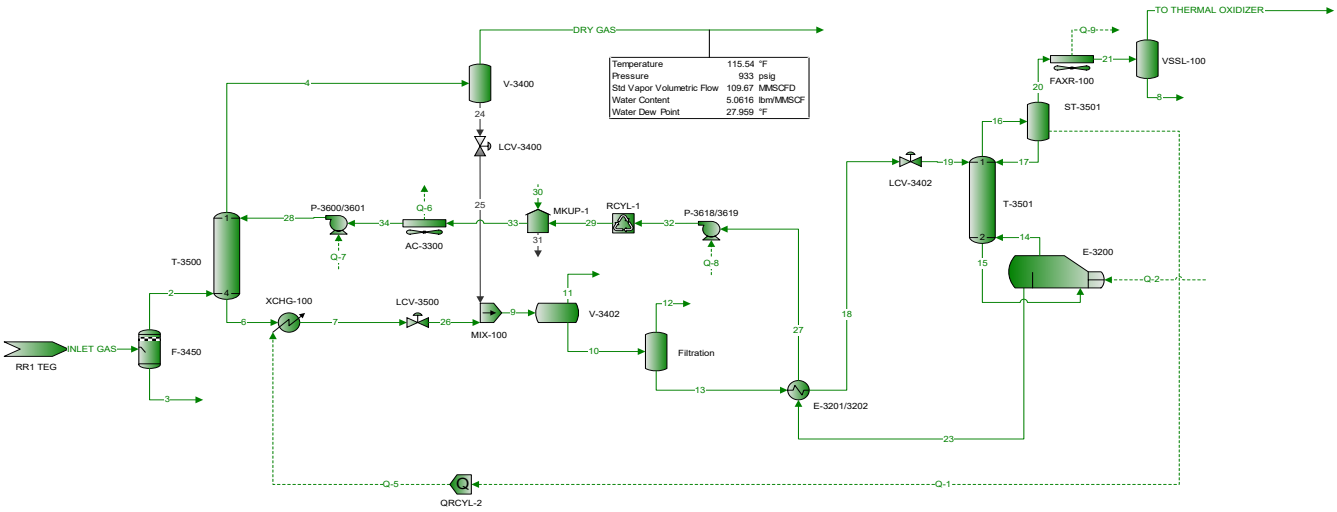
TO THERMAL OXIDIZER
DRY GAS
Temperature 115.54 °F
Pressure 933 psig
Std Vapor Volumetric Flow 109.67 MMSCFD
Water Content 5.0616 lbm/MMSCF
Water Dew Point 27.959 °F
V-3400
LCV-3400
LCV-3402
FAXR-100
VSSL-100
ST-3501
T-3501
T-3500
E-3200
P-3600/3601
AC-3300
MKUP-1
RCYL-1
P-3618/3619
XCHG-100
LCV-3500
MIX-100
V-3402
Filtration
E-3201/3202
F-3450
INLET GAS
RR1 TEG
QRCYL-2
Q-1
Q-2
Q-5
Q-6
Q-7
Q-8
Q-9

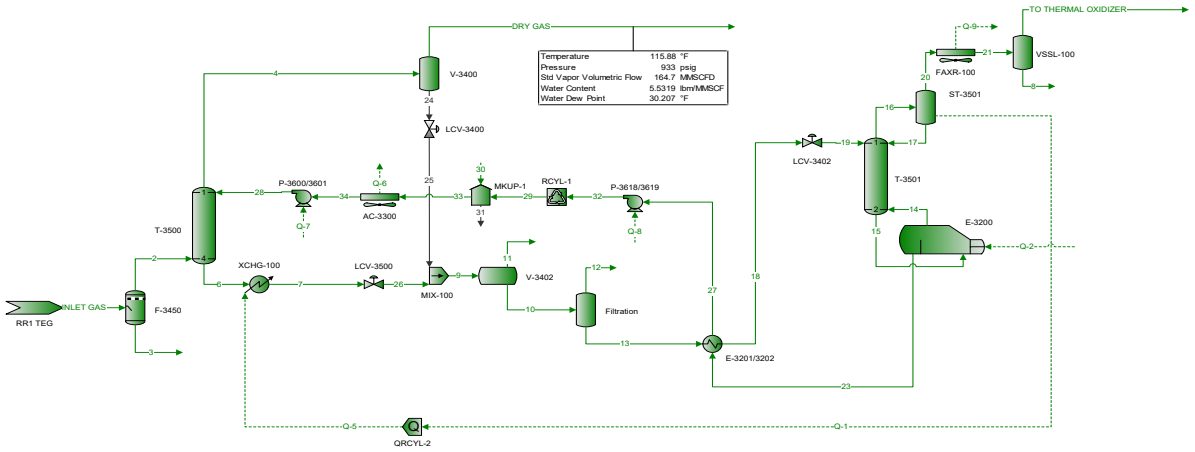
TO THERMAL OXIDIZER
DRY GAS
Q-9
VSSL-100
FAXR-100
ST-3501
V-3400
LCV-3400
LCV-3402
T-3501
P-3600/3601
Q-6
MKUP-1
RCYL-1
P-3618/3619
AC-3300
Q-7
Q-8
E-3200
Q-2
T-3500
XCHG-100
LCV-3500
V-3402
MIX-100
INLET GAS
RR1 TEG
F-3450
Filtration
E-3201/3202
Q-5
QRCYL-2
Q-1
Temperature 115.88 °F
Pressure 933 psig
Std Vapor Volumetric Flow 164.7 MMSCFD
Water Content 5.5319 lbm/MMSCF
Water Dew Point 30.207 °F

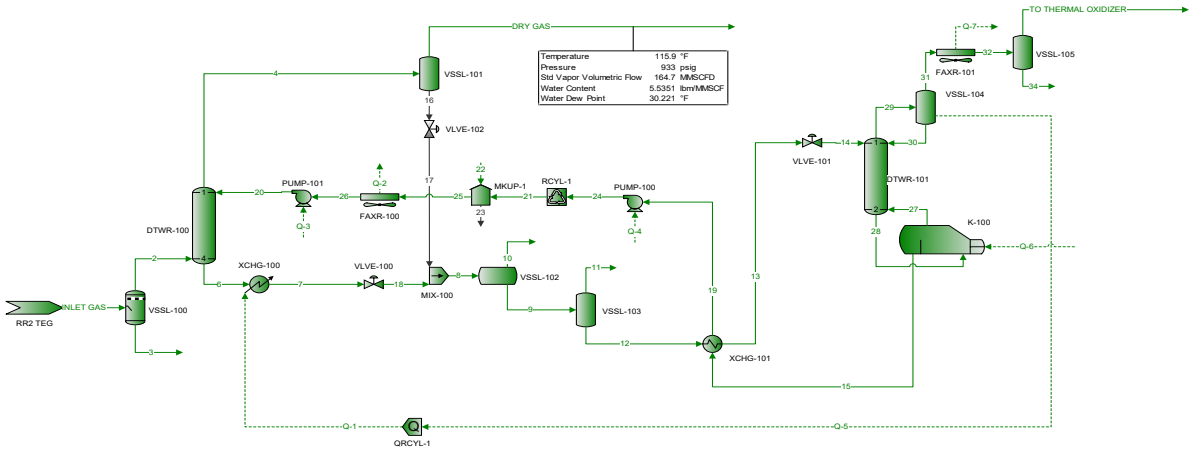
TO THERMAL OXIDIZER
DRY GAS
Temperature 115.9 °F
Pressure 933 psig
Std Vapor Volumetric Flow 164.7 MMSCFD
Water Content 5.5351 lbm/MMSCF
Water Dew Point 30.221 °F
VSSL-101
VLVE-102
VLVE-101
VSSL-105
FAXR-101
VSSL-104
DTWR-101
PUMP-101
Q-2
FAXR-100
MKUP-1
RCYL-1
PUMP-100
Q-3
Q-4
DTWR-100
K-100
XCHG-100
VLVE-100
MIX-100
VSSL-102
VSSL-103
XCHG-101
INLET GAS
RR2 TEG
VSSL-100
QRCYL-1
Q-1
Q-5
Q-6
Q-7

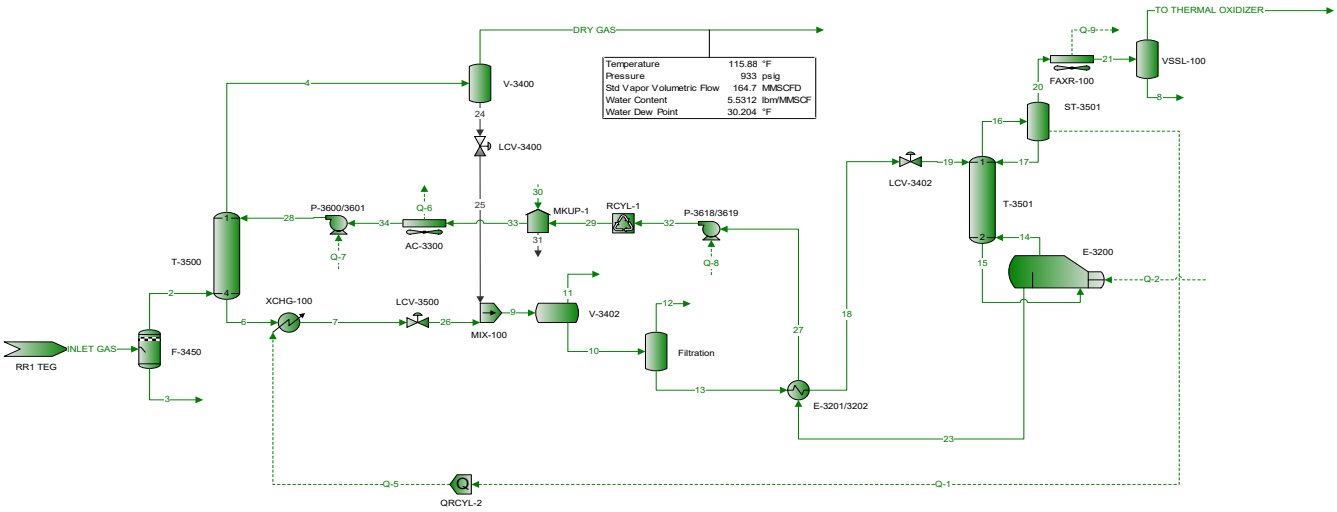
DRY GAS
TO THERMAL OXIDIZER
Temperature 115.88 °F
Pressure 933 psig
Std Vapor Volumetric Flow 164.7 MMSCFD
Water Content 5.5312 lbm/MMSCF
Water Dew Point 30.204 °F
V-3400
LCV-3400
FAXR-100
VSSL-100
ST-3501
LCV-3402
T-3501
E-3200
T-3500
P-3600/3601
AC-3300
MKUP-1
RCYL-1
P-3618/3619
XCHG-100
LCV-3500
MIX-100
V-3402
Filtration
E-3201/3202
INLET GAS
RR1 TEG
F-3450
QRCYL-2

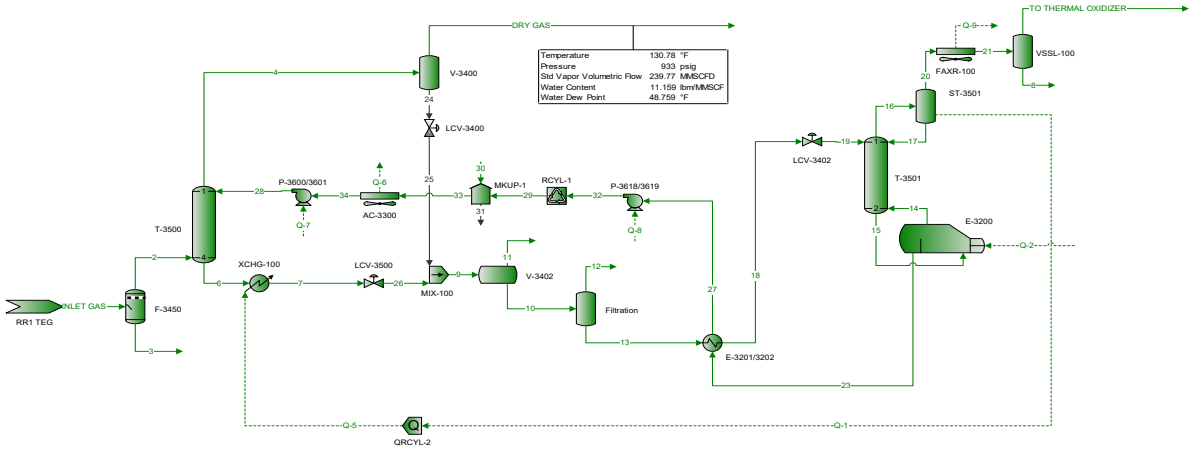
DRY GAS
TO THERMAL OXIDIZER
Temperature 130.78 °F
Pressure 933 psig
Std Vapor Volumetric Flow 239.77 MMSCFD
Water Content 11.159 lbm/MMSCF
Water Dew Point 48.759 °F
V-3400
LCV-3400
FAXR-100
VSSL-100
ST-3501
LCV-3402
T-3501
E-3200
P-3600/3601
AC-3300
MKUP-1
RCYL-1
P-3618/3619
T-3500
XCHG-100
LCV-3500
MIX-100
V-3402
Filtration
E-3201/3202
INLET GAS
RR1 TEG
F-3450
QRCYL-2

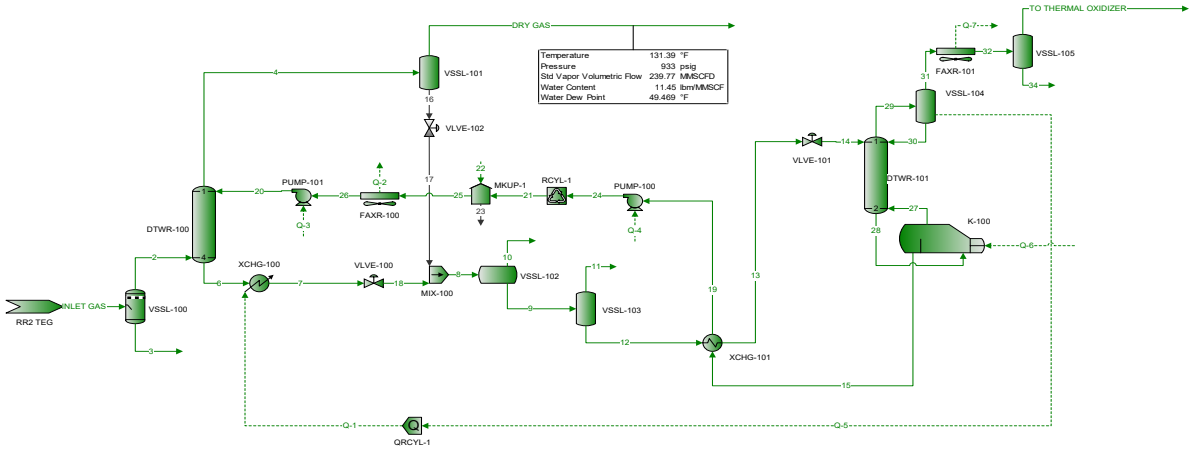
DRY GAS
TO THERMAL OXIDIZER
Temperature 131.39 °F
Pressure 933 psig
Std Vapor Volumetric Flow 239.77 MMSCFD
Water Content 11.45 lbm/MMSCF
Water Dew Point 49.469 °F
VSSL-101
VLVE-102
VLVE-101
VSSL-104
VSSL-105
FAXR-101
PUMP-101
FAXR-100
MKUP-1
RCYL-1
PUMP-100
DTWR-100
DTWR-101
K-100
XCHG-100
VLVE-100
MIX-100
VSSL-102
VSSL-103
XCHG-101
INLET GAS
RR2 TEG
VSSL-100
Q-1
Q-2
Q-3
Q-4
Q-5
Q-6
Q-7
QRCYL-1

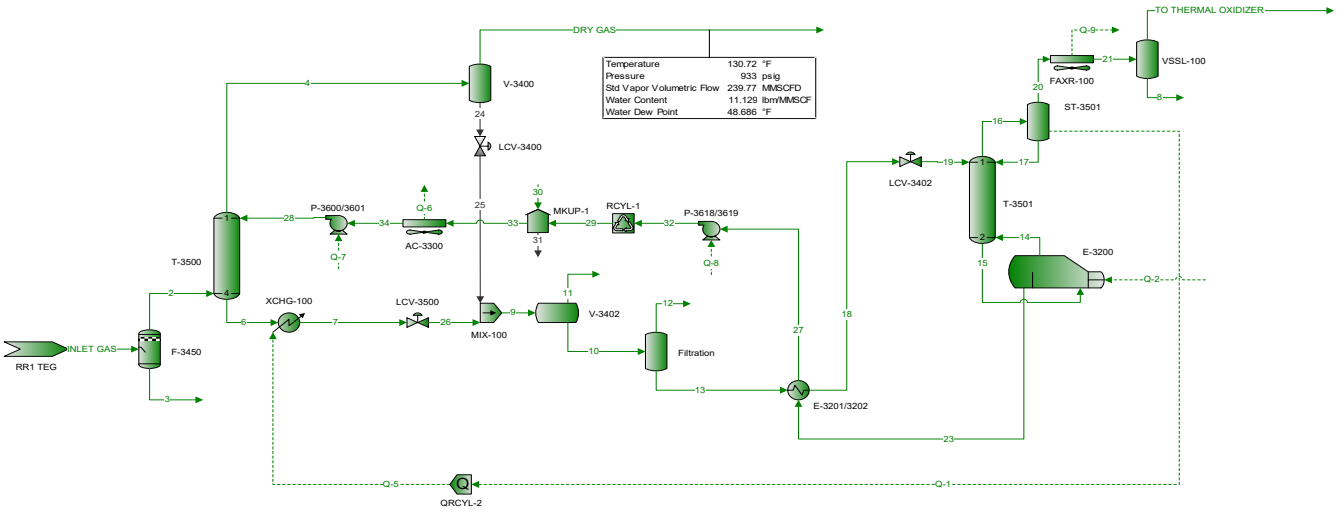
DRY GAS
TO THERMAL OXIDIZER
Temperature 130.72 °F
Pressure 933 psig
Std Vapor Volumetric Flow 239.77 MMSCFD
Water Content 11.129 lbm/MMSCF
Water Dew Point 48.686 °F
V-3400
LCV-3400
FAXR-100
VSSL-100
ST-3501
LCV-3402
T-3501
E-3200
T-3500
P-3600/3601
AC-3300
MKUP-1
RCYL-1
P-3618/3619
XCHG-100
LCV-3500
MIX-100
V-3402
Filtration
E-3201/3202
INLET GAS
RR1 TEG
F-3450
QRCYL-2

Targa Midstream Services LLC
Road Runner Gas Plant
Hourly Crude Working/Breathing/Flash

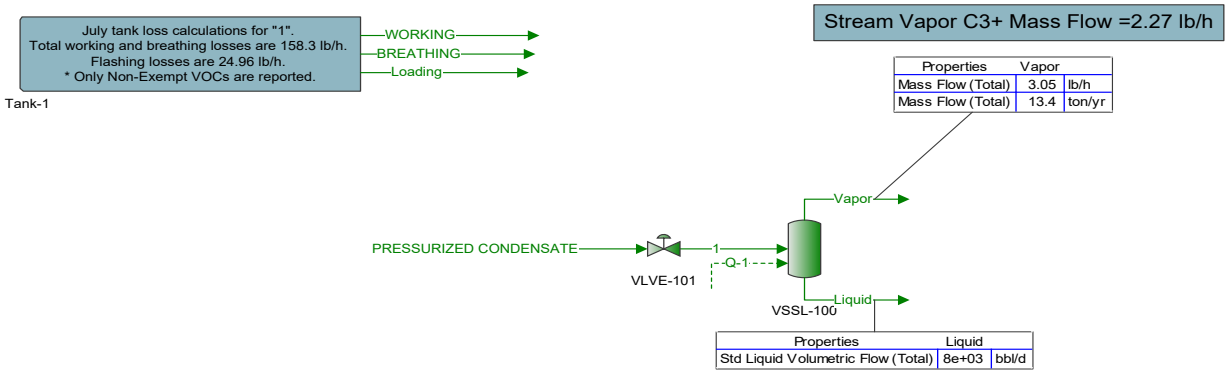

Names	Units	PRESSURIZED CONDENSATE	Liquid	Vapor
Temperature	°F	120*	95	95*
Pressure	psia	14.7*	14.7	14.7
Mass Fraction Vapor	%	0.19202	0	100
Molecular Weight	lb/lbmol	88.602	88.604	52.438
Vapor Volumetric Flow	ft^3/h	2885.6	1913.6	23.24
Liquid Volumetric Flow	gpm	359.76	238.58	2.8975

Road Runner
Annual Crude Working/Breathing/Flash

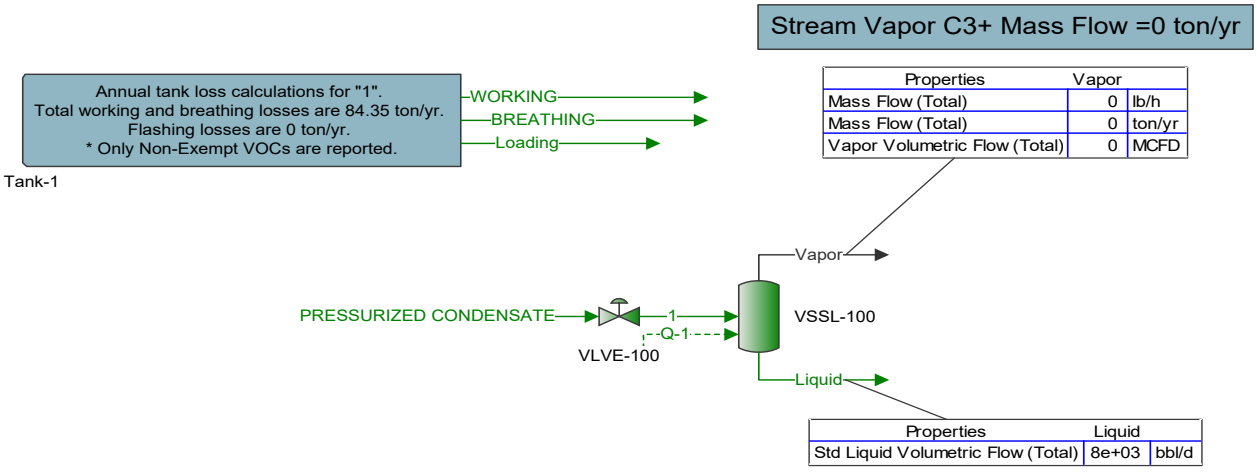

Names	Units	Liquid	Vapor
Temperature	°F	63.2	63.2*
Pressure	psig	0.0040512	0.0040512
Mass Fraction Vapor	%	0	
Molecular Weight	lb/lbmol	88.602	
Vapor Volumetric Flow	ft^3/h	1867.5	0
Liquid Volumetric Flow	gpm	232.83	0

Road Runner
Hourly PW Working/Breathing/Flash

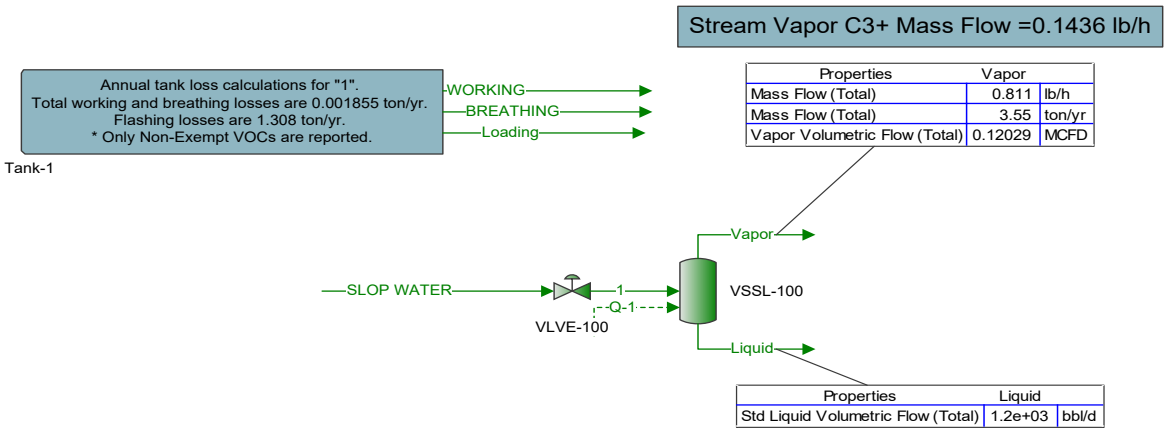

Names	Units	Liquid	Vapor
Temperature	°F	95	95*
Pressure	psig	20.223	20.223
Mass Fraction Vapor	%	0	100
Molecular Weight	lb/lbmol	18.02	27.302
Vapor Volumetric Flow	ft^3/h	282.26	5.0121
Liquid Volumetric Flow	gpm	35.191	0.62488

Section 8

Map(s)

A map such as a 7.5 minute topographic quadrangle showing the exact location of the source. The map shall also include the following:

The UTM or Longitudinal coordinate system on both axes	An indicator showing which direction is north
A minimum radius around the plant of 0.8km (0.5 miles)	Access and haul roads
Topographic features of the area	Facility property boundaries
The name of the map	The area which will be restricted to public access
A graphical scale	

A topographical map is attached.

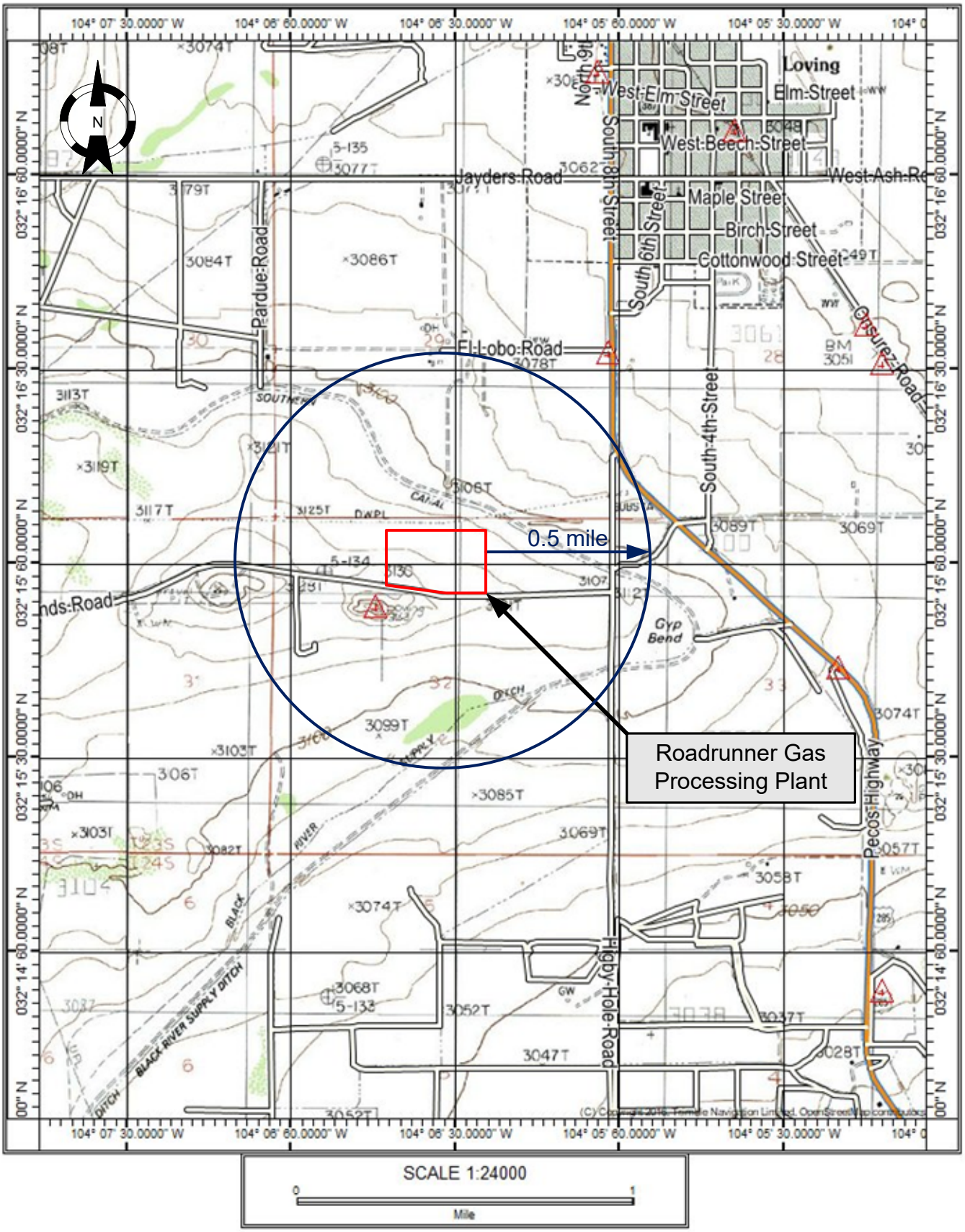

ALLIANT ENVIRONMENTAL, LLC	**Area Map**	**Lucid Energy Delaware, LLC**

Scale:	Drawn by:	Date:		Project No.:	File Name:	Figure:
1:24,000	MDF	4/8/2020	**Roadrunner Gas Processing Plant** N 32° 15' 56.71" Latitude W 104° 6' 29.97" Longitude	097-002	**Roadrunner Figures**	Section 8
	Chk'd by:	Date:				

Section 9

Proof of Public Notice

(for NSR applications submitting under 20.2.72 or 20.2.74 NMAC)
(This proof is required by: 20.2.72.203.A.14 NMAC "Documentary Proof of applicant's public notice")

☑ **I have read the AQB "Guidelines for Public Notification for Air Quality Permit Applications"**
This document provides detailed instructions about public notice requirements for various permitting actions. It also provides public notice examples and certification forms. Material mistakes in the public notice will require a re-notice before issuance of the permit.

Unless otherwise allowed elsewhere in this document, the following items document proof of the applicant's Public Notification. Please include this page in your proof of public notice submittal with checkmarks indicating which documents are being submitted with the application.

New Permit and **Significant Permit Revision** public notices must include all items in this list.

Technical Revision public notices require only items 1, 5, 9, and 10.

Per the Guidelines for Public Notification document mentioned above, include:

1. ☑ A copy of the certified letter receipts with post marks (20.2.72.203.B NMAC)
2. ☑ A list of the places where the public notice has been posted in at least four publicly accessible and conspicuous places, including the proposed or existing facility entrance. (e.g: post office, library, grocery, etc.)
3. ☑ A copy of the property tax record (20.2.72.203.B NMAC).
4. ☑ A sample of the letters sent to the owners of record.
5. ☑ A sample of the letters sent to counties, municipalities, and Indian tribes.
6. ☑ A sample of the public notice posted and a verification of the local postings.
7. ☑ A table of the noticed citizens, counties, municipalities and tribes and to whom the notices were sent in each group.
8. ☑ A copy of the public service announcement (PSA) sent to a local radio station and documentary proof of submittal.
9. ☑ A copy of the classified or legal ad including the page header (date and newspaper title) or its affidavit of publication stating the ad date, and a copy of the ad. When appropriate, this ad shall be printed in both English and Spanish.
10. ☑ A copy of the display ad including the page header (date and newspaper title) or its affidavit of publication stating the ad date, and a copy of the ad. When appropriate, this ad shall be printed in both English and Spanish.
11. ☑ A map with a graphic scale showing the facility boundary and the surrounding area in which owners of record were notified by mail. This is necessary for verification that the correct facility boundary was used in determining distance for notifying land owners of record.

Public notice documents are attached.

General Posting of Notices – Certification

I, Jaylen Fuentes, the undersigned, certify that on **December 13, 2022,** posted a true and correct copy of the attached Public Notice in the following publicly accessible and conspicuous places in the **Village of Loving** of **Eddy** County, State of New Mexico on the following dates:

1. Facility entrance: 12/13/2022
2. Village of Loving City Hall: 12/13/2022
3. Loving Allsup's Convenience Store: 12/13/2022
4. Loving USPS: 12/13/2022

Signed this 13th day of December, 2022,



Signature

12/13/2022
Date

Jaylen Fuentes
Printed Name

Environmental Specialist
Title

NOTICE

Targa Northern Delaware, LLC announces its application submittal to the New Mexico Environment Department for an air quality permit for the **modification** of its **Road Runner Gas Processing Plant** facility. The expected date of application submittal to the Air Quality Bureau is **December 13, 2022.**

The exact location for the proposed facility known as, **Road Runner Gas Processing Plant**, is at latitude **32** deg**, 15** min, **56.71** sec and longitude **-104** deg**, 6** min, **29.97** sec. The approximate location of this facility is **1.7** miles south-west of Loving in Eddy County, New Mexico.

The proposed **modification** consists of updating NSR Permit 7200-M3 based on the most current plans, updating representations, and removing one proposed processing train from the permit. The estimated maximum quantities of any regulated air contaminant will be as follows in pound per hour (pph) and tons per year (tpy) and could change slightly during the course of the Department's review:

Pollutant:	Pounds per hour	Tons per year
Particulate Matter (PM)	5 pph	19 tpy
PM_{10}	5 pph	18 tpy
$PM_{2.5}$	5 pph	17 tpy
Sulfur Dioxide (SO_2)	2,764 pph	163 tpy
Nitrogen Oxides (NO_x)	5,241 pph	172 tpy
Carbon Monoxide (CO)	10,443 pph	249 tpy
Volatile Organic Compounds (VOC) (with fugitives)	8,952 pph	328 tpy
Volatile Organic Compounds (VOC) (without fugitives)	8,923 pph	201 tpy
Total sum of all Hazardous Air Pollutants (HAPs)	455 pph	24.9 tpy
Toxic Air Pollutant (TAP)	n/a pph	n/a tpy
Green House Gas Emissions as Total CO_2e	n/a	467,511 tpy

The standard and maximum operating schedules of the facility will be 24 hours a day, 7 days a week and a maximum of 52 weeks per year.
The owner and/or operator of the Facility is: **Targa Northern Delaware, LLC; 6 Desta Drive, Suite 3300, Midland, TX 79705**

If you have any comments about the construction or operation of this facility, and you want your comments to be made as part of the permit review process, you must submit your comments in writing to this address: Permit Programs Manager; New Mexico Environment Department; Air Quality Bureau; 525 Camino de los Marquez, Suite 1; Santa Fe, New Mexico; 87505-1816. Other comments and questions may be submitted verbally. (505) 476-4300; 1 800 224-7009.

With your comments, please refer to the company name and facility name, or send a copy of this notice along with your comments. This information is necessary since the Department may have not yet received the permit application. Please include a legible return mailing address. Once the Department has completed its preliminary review of the application and its air quality impacts, the Department's notice will be published in the legal section of a newspaper circulated near the facility location.

Attención

Este es un aviso de la oficina de Calidad del Aire del Departamento del Medio Ambiente de Nuevo México, acerca de las emisiones producidas por un establecimiento en esta área. Si usted desea información en español, por favor comuníquese con esa oficina al teléfono 505-372-8373.

Notice of Non-Discrimination
NMED does not discriminate on the basis of race, color, national origin, disability, age or sex in the administration of its programs or activities, as required by applicable laws and regulations. NMED is responsible for coordination of compliance efforts and receipt of inquiries concerning non-discrimination requirements implemented by 40 C.F.R. Part 7, including Title VI of the Civil Rights Act of 1964, as amended; Section 504 of the Rehabilitation Act of 1973; the Age Discrimination Act of 1975, Title IX of the Education Amendments of 1972, and Section 13 of the Federal Water Pollution Control Act Amendments of 1972. If you have any questions about this notice or any of NMED's non-discrimination programs, policies or procedures, or if you believe that you have been discriminated against with respect to a NMED program or activity, you may contact: Kathryn Becker, Non-Discrimination Coordinator, NMED, 1190 St. Francis Dr., Suite N4050, P.O. Box 5469, Santa Fe, NM 87502, (505) 827-2855, nd.coordinator@state.nm.us. You may also visit our website at https://www.env.nm.gov/non-employee-discrimination-complaint-page/ to learn how and where to file a complaint of discrimination.

NOTICE

Targa Northern Delaware, LLC announces its application submittal to the New Mexico Environment Department for an air quality permit for the **modification** of its **Road Runner Gas Processing Plant** facility. The expected date of application submittal to the Air Quality Bureau is **December 13, 2022.**

The exact location for the proposed facility known as, **Road Runner Gas Processing Plant**, is at latitude **32** deg, **15** min, **56.71** sec and longitude **-104** deg, **6** min, **29.97** sec. The approximate location of this facility is **1.7** miles south-west of Loving in Eddy County, New Mexico.

The proposed **modification** consists of updating NSR Permit 7200-M3 based on the most current plans, updating representations, and removing one proposed processing train from the permit. The estimated maximum quantities of any regulated air contaminant will be as follows in pound per hour (pph) and tons per year (tpy) and could change slightly during the course of the Department's review:

Pollutant:	Pounds per hour	Tons per year
Particulate Matter (PM)	5 pph	19 tpy
PM_{10}	5 pph	18 tpy
$PM_{2.5}$	5 pph	17 tpy
Sulfur Dioxide (SO_2)	2,764 pph	163 tpy
Nitrogen Oxides (NO_x)	5,241 pph	172 tpy
Carbon Monoxide (CO)	10,443 pph	249 tpy
Volatile Organic Compounds (VOC) (with fugitives)	8,952 pph	328 tpy
Volatile Organic Compounds (VOC) (without fugitives)	8,923 pph	201 tpy
Total sum of all Hazardous Air Pollutants (HAPs)	455 pph	24.9 tpy
Toxic Air Pollutant (TAP)	n/a pph	n/a tpy
Green House Gas Emissions as Total CO_2e	n/a	467,511 tpy

The standard and maximum operating schedules of the facility will be 24 hours a day, 7 days a week and a maximum of 52 weeks per year.
The owner and/or operator of the Facility is: **Targa Northern Delaware, LLC; 6 Desta Drive, Suite 3300, Midland, TX 79705**

If you have any comments about the construction or operation of this facility, and you want your comments to be made as part of the permit review process, you must submit your comments in writing to this address: Permit Programs Manager; New Mexico Environment Department; Air Quality Bureau; 525 Camino de los Marquez, Suite 1; Santa Fe, New Mexico; 87505-1816. Other comments and questions may be submitted verbally. (505) 476-4300; 1 800 224-7009.

With your comments, please refer to the company name and facility name, or send a copy of this notice along with your comments. This information is necessary since the Department may have not yet received the permit application. Please include a legible return mailing address. Once the Department has completed its preliminary review of the application and its air quality impacts, the Department's notice will be published in the legal section of a newspaper circulated near the facility location.

Attención

Este es un aviso de la oficina de Calidad del Aire del Departamento del Medio Ambiente de Nuevo México, acerca de las emisiones producidas por un establecimiento en esta área. Si usted desea información en español, por favor comuníquese con esa oficina al teléfono 505-372-8373.

Notice of Non-Discrimination
NMED does not discriminate on the basis of race, color, national origin, disability, age or sex in the administration of its programs or activities, as required by applicable laws and regulations. NMED is responsible for coordination of compliance efforts and receipt of inquiries concerning non-discrimination requirements implemented by 40 C.F.R. Part 7, including Title VI of the Civil Rights Act of 1964, as amended; Section 504 of the Rehabilitation Act of 1973; the Age Discrimination Act of 1975, Title IX of the Education Amendments of 1972, and Section 13 of the Federal Water Pollution Control Act Amendments of 1972. If you have any questions about this notice or any of NMED's non-discrimination programs, policies or procedures, or if you believe that you have been discriminated against with respect to a NMED program or activity, you may contact: Kathryn Becker, Non-Discrimination Coordinator, NMED, 1190 St. Francis Dr., Suite N4050, P.O. Box 5469, Santa Fe, NM 87502, (505) 827-2855, nd.coordinator@state.nm.us. You may also visit our website at https://www.env.nm.gov/non-employee-discrimination-complaint-page/ to learn how and where to file a complaint of discrimination.


ALLSUP'S
NO SMOKING
SEASON of Savings
BUY A 44oz.
pepsi
SEASON of Savings
SEASON of Savings

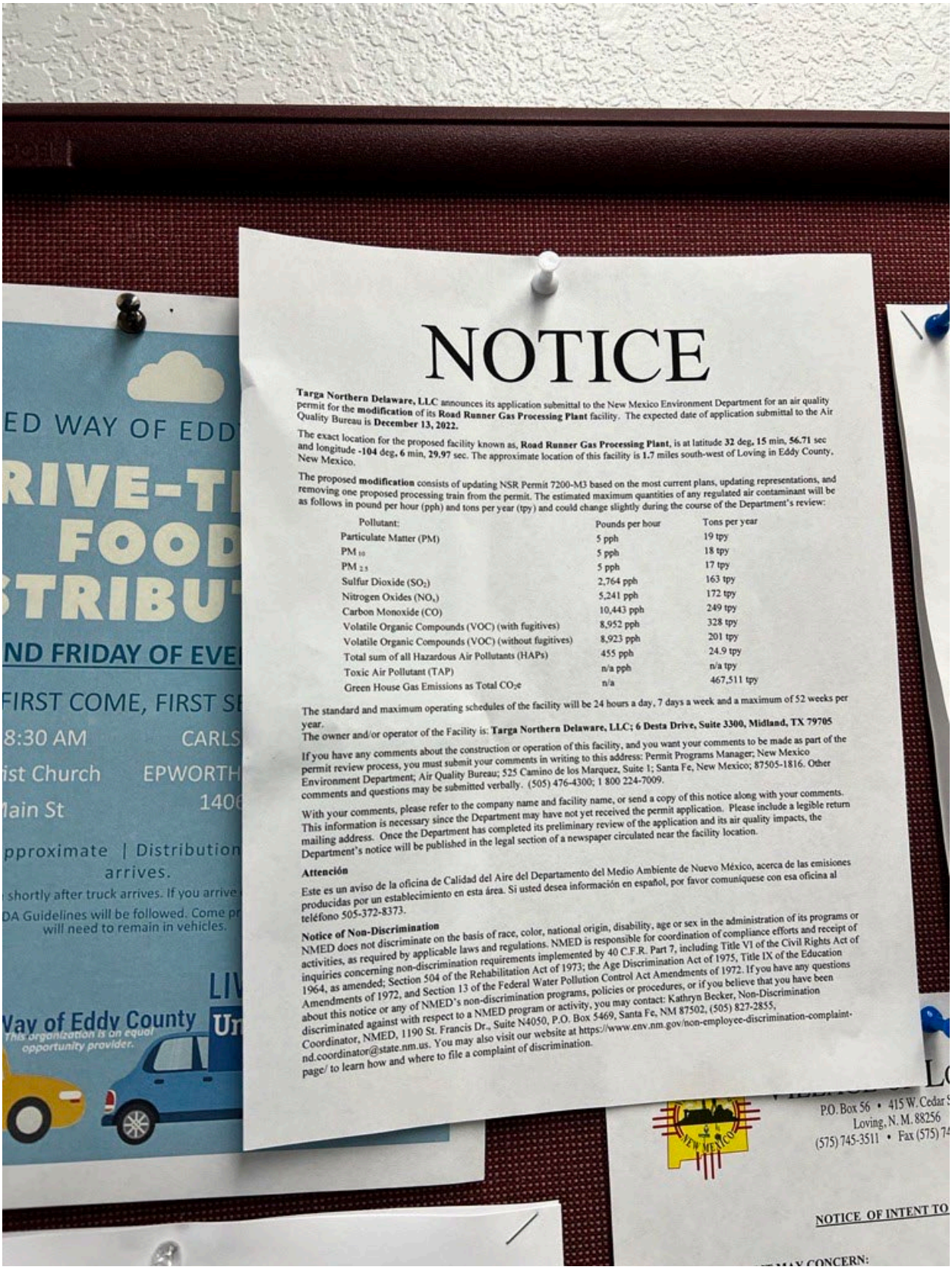

NOTICE

Targa Northern Delaware, LLC announces its application submittal to the New Mexico Environment Department for an air quality permit for the **modification** of its **Road Runner Gas Processing Plant** facility. The expected date of application submittal to the Air Quality Bureau is **December 13, 2022.**

The exact location for the proposed facility known as, **Road Runner Gas Processing Plant**, is at latitude **32** deg, **15** min, **56.71** sec and longitude **-104** deg, **6** min, **29.97** sec. The approximate location of this facility is **1.7** miles south-west of Loving in Eddy County, New Mexico.

The proposed **modification** consists of updating NSR Permit 7200-M3 based on the most current plans, updating representations, and removing one proposed processing train from the permit. The estimated maximum quantities of any regulated air contaminant will be as follows in pound per hour (pph) and tons per year (tpy) and could change slightly during the course of the Department's review:

Pollutant:	Pounds per hour	Tons per year
Particulate Matter (PM)	5 pph	19 tpy
PM_{10}	5 pph	18 tpy
$PM_{2.5}$	5 pph	17 tpy
Sulfur Dioxide (SO_2)	2,764 pph	163 tpy
Nitrogen Oxides (NO_x)	5,241 pph	172 tpy
Carbon Monoxide (CO)	10,443 pph	249 tpy
Volatile Organic Compounds (VOC) (with fugitives)	8,952 pph	328 tpy
Volatile Organic Compounds (VOC) (without fugitives)	8,923 pph	201 tpy
Total sum of all Hazardous Air Pollutants (HAPs)	455 pph	24.9 tpy
Toxic Air Pollutant (TAP)	n/a pph	n/a tpy
Green House Gas Emissions as Total CO_2e	n/a	467,511 tpy

The standard and maximum operating schedules of the facility will be 24 hours a day, 7 days a week and a maximum of 52 weeks per year.
The owner and/or operator of the Facility is: **Targa Northern Delaware, LLC; 6 Desta Drive, Suite 3300, Midland, TX 79705**

If you have any comments about the construction or operation of this facility, and you want your comments to be made as part of the permit review process, you must submit your comments in writing to this address: Permit Programs Manager; New Mexico Environment Department; Air Quality Bureau; 525 Camino de los Marquez, Suite 1; Santa Fe, New Mexico; 87505-1816. Other comments and questions may be submitted verbally. (505) 476-4300; 1 800 224-7009.

With your comments, please refer to the company name and facility name, or send a copy of this notice along with your comments. This information is necessary since the Department may have not yet received the permit application. Please include a legible return mailing address. Once the Department has completed its preliminary review of the application and its air quality impacts, the Department's notice will be published in the legal section of a newspaper circulated near the facility location.

Attención

Este es un aviso de la oficina de Calidad del Aire del Departamento del Medio Ambiente de Nuevo México, acerca de las emisiones producidas por un establecimiento en esta área. Si usted desea información en español, por favor comuníquese con esa oficina al teléfono 505-372-8373.

Notice of Non-Discrimination

NMED does not discriminate on the basis of race, color, national origin, disability, age or sex in the administration of its programs or activities, as required by applicable laws and regulations. NMED is responsible for coordination of compliance efforts and receipt of inquiries concerning non-discrimination requirements implemented by 40 C.F.R. Part 7, including Title VI of the Civil Rights Act of 1964, as amended; Section 504 of the Rehabilitation Act of 1973; the Age Discrimination Act of 1975, Title IX of the Education Amendments of 1972, and Section 13 of the Federal Water Pollution Control Act Amendments of 1972. If you have any questions about this notice or any of NMED's non-discrimination programs, policies or procedures, or if you believe that you have been discriminated against with respect to a NMED program or activity, you may contact: Kathryn Becker, Non-Discrimination Coordinator, NMED, 1190 St. Francis Dr., Suite N4050, P.O. Box 5469, Santa Fe, NM 87502, (505) 827-2855, nd.coordinator@state.nm.us. You may also visit our website at https://www.env.nm.gov/non-employee-discrimination-complaint-page/ to learn how and where to file a complaint of discrimination.


MANUEL H. GARZA BUILDING

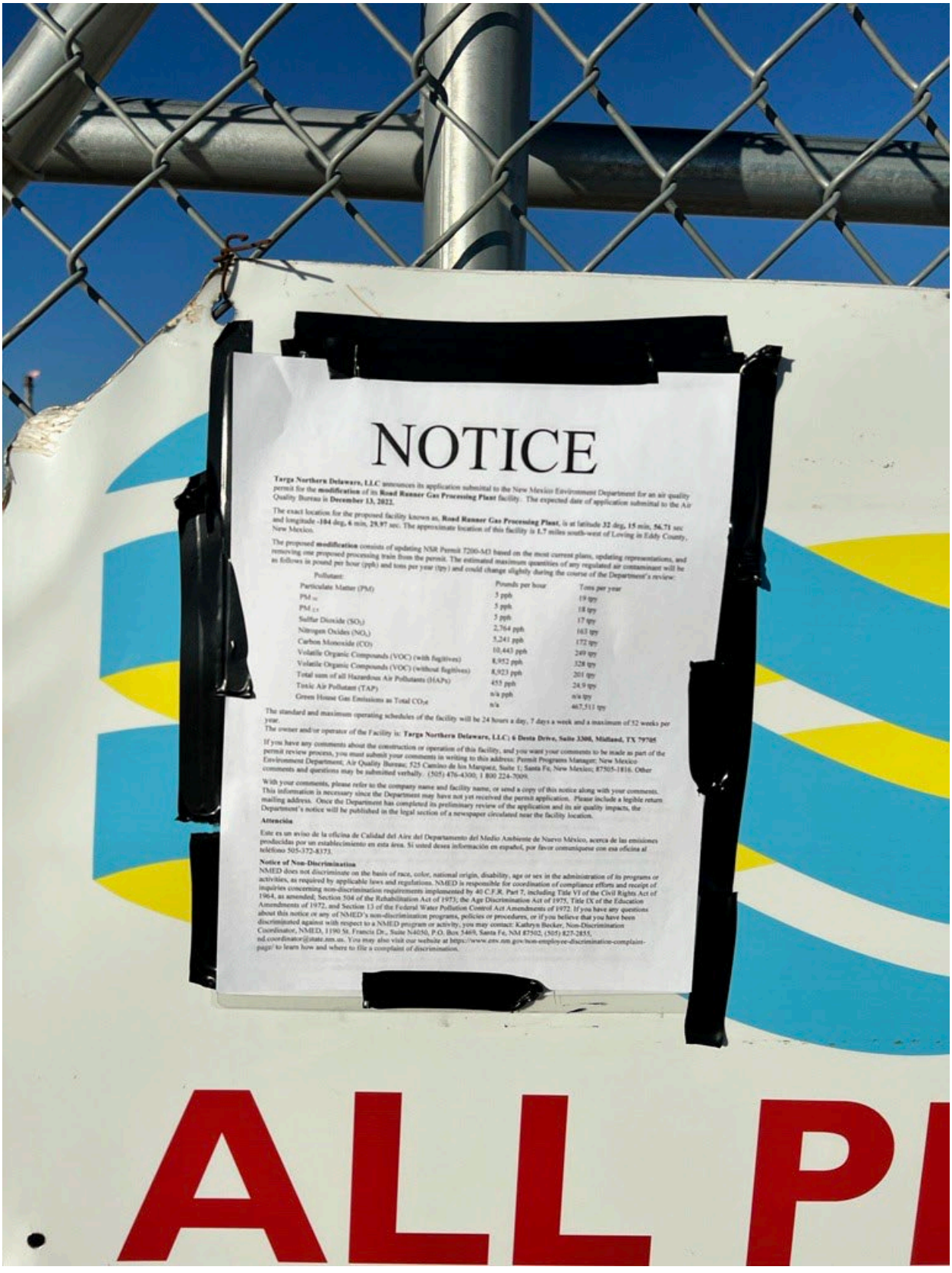

NOTICE

Targa Northern Delaware, LLC announces its application submittal to the New Mexico Environment Department for an air quality permit for the **modification** of its **Road Runner Gas Processing Plant** facility. The expected date of application submittal to the Air Quality Bureau is **December 13, 2022.**

The exact location for the proposed facility known as, **Road Runner Gas Processing Plant**, is at latitude **32** deg, **15** min, **56.71** sec and longitude **-104** deg, **6** min, **29.97** sec. The approximate location of this facility is **1.7** miles south-west of Loving in Eddy County, New Mexico.

The proposed **modification** consists of updating NSR Permit 7200-M3 based on the most current plans, updating representations, and removing one proposed processing train from the permit. The estimated maximum quantities of any regulated air contaminant will be as follows in pound per hour (pph) and tons per year (tpy) and could change slightly during the course of the Department's review:

Pollutant:	Pounds per hour	Tons per year
Particulate Matter (PM)	5 pph	19 tpy
PM $_{10}$	5 pph	18 tpy
PM $_{2.5}$	5 pph	17 tpy
Sulfur Dioxide (SO_2)	2,764 pph	163 tpy
Nitrogen Oxides (NO_x)	5,241 pph	172 tpy
Carbon Monoxide (CO)	10,443 pph	249 tpy
Volatile Organic Compounds (VOC) (with fugitives)	8,952 pph	328 tpy
Volatile Organic Compounds (VOC) (without fugitives)	8,923 pph	201 tpy
Total sum of all Hazardous Air Pollutants (HAPs)	455 pph	24.9 tpy
Toxic Air Pollutant (TAP)	n/a pph	n/a tpy
Green House Gas Emissions as Total CO_2e	n/a	467,511 tpy

The standard and maximum operating schedules of the facility will be 24 hours a day, 7 days a week and a maximum of 52 weeks per year.
The owner and/or operator of the Facility is: **Targa Northern Delaware, LLC) 6 Desta Drive, Suite 3300, Midland, TX 79705**

If you have any comments about the construction or operation of this facility, and you want your comments to be made as part of the permit review process, you must submit your comments in writing to this address: Permit Programs Manager; New Mexico Environment Department; Air Quality Bureau; 525 Camino de los Marquez, Suite 1; Santa Fe, New Mexico; 87505-1816. Other comments and questions may be submitted verbally. (505) 476-4300; 1 800 224-7009.

With your comments, please refer to the company name and facility name, or send a copy of this notice along with your comments. This information is necessary since the Department may have not yet received the permit application. Please include a legible return mailing address. Once the Department has completed its preliminary review of the application and its air quality impacts, the Department's notice will be published in the legal section of a newspaper circulated near the facility location.

Attención

Este es un aviso de la oficina de Calidad del Aire del Departamento del Medio Ambiente de Nuevo México, acerca de las emisiones producidas por un establecimiento en esta área. Si usted desea información en español, por favor comuníquese con esa oficina al teléfono 505-372-8373.

Notice of Non-Discrimination

NMED does not discriminate on the basis of race, color, national origin, disability, age or sex in the administration of its programs or activities, as required by applicable laws and regulations. NMED is responsible for coordination of compliance efforts and receipt of inquiries concerning non-discrimination requirements implemented by 40 C.F.R. Part 7, including Title VI of the Civil Rights Act of 1964, as amended; Section 504 of the Rehabilitation Act of 1973; the Age Discrimination Act of 1975, Title IX of the Education Amendments of 1972, and Section 13 of the Federal Water Pollution Control Act Amendments of 1972. If you have any questions about this notice or any of NMED's non-discrimination programs, policies or procedures, or if you believe that you have been discriminated against with respect to a NMED program or activity, you may contact: Kathryn Becker, Non-Discrimination Coordinator, NMED, 1190 St. Francis Dr., Suite N4050, P.O. Box 5469, Santa Fe, NM 87502, (505) 827-2855, nd.coordinator@state.nm.us. You may also visit our website at https://www.env.nm.gov/non-employee-discrimination-complaint-page/ to learn how and where to file a complaint of discrimination.

ALL P


LUCID
energy group
SAFETY FIRST!
NOTICE
CAUTION
H2S
24HR
NO
HIGH VOLTAGE
NOTICE
SPEED LIMIT
10
LUCID
energy group
ALL PERSONNEL
Entering This Facility
Must Sign-In At The
Office. NO EXCEPTONS!
LUCID
energy group
Roadrunner
Processing Plant
Control Room Number
575.748.7014

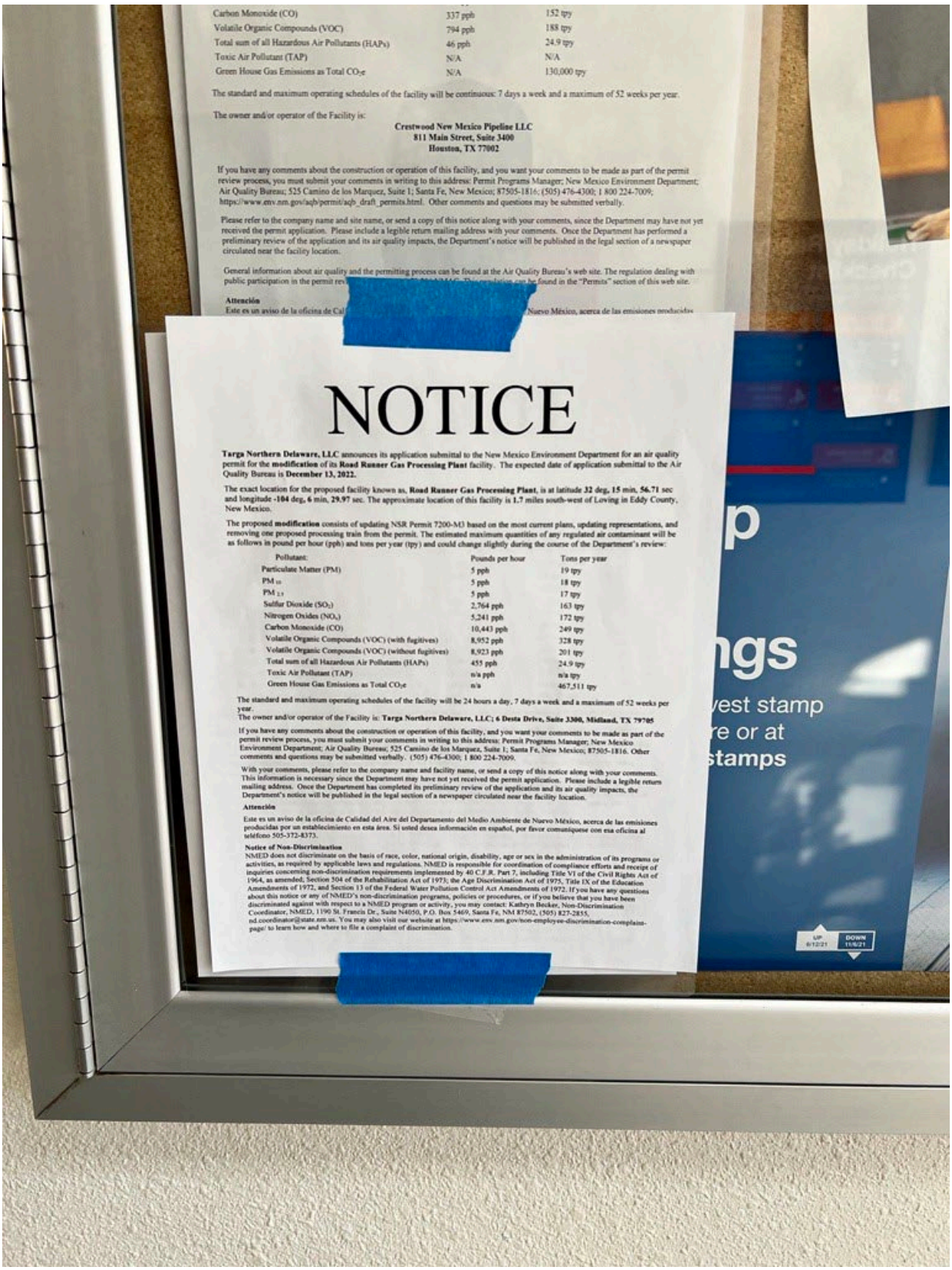

Carbon Monoxide (CO)	337 pph	152 tpy
Volatile Organic Compounds (VOC)	794 pph	188 tpy
Total sum of all Hazardous Air Pollutants (HAPs)	46 pph	24.9 tpy
Toxic Air Pollutant (TAP)	N/A	N/A
Green House Gas Emissions as Total CO_2e	N/A	130,000 tpy

The standard and maximum operating schedules of the facility will be continuous: 7 days a week and a maximum of 52 weeks per year.

The owner and/or operator of the Facility is:

Crestwood New Mexico Pipeline LLC
811 Main Street, Suite 3400
Houston, TX 77002

If you have any comments about the construction or operation of this facility, and you want your comments to be made as part of the permit review process, you must submit your comments in writing to this address: Permit Programs Manager; New Mexico Environment Department; Air Quality Bureau; 525 Camino de los Marquez, Suite 1; Santa Fe, New Mexico; 87505-1816; (505) 476-4300; 1 800 224-7009; https://www.env.nm.gov/aqb/permit/aqb_draft_permits.html. Other comments and questions may be submitted verbally.

Please refer to the company name and site name, or send a copy of this notice along with your comments, since the Department may have not yet received the permit application. Please include a legible return mailing address with your comments. Once the Department has performed a preliminary review of the application and its air quality impacts, the Department's notice will be published in the legal section of a newspaper circulated near the facility location.

General information about air quality and the permitting process can be found at the Air Quality Bureau's web site. The regulation dealing with public participation in the permit rev[redacted] can be found in the "Permits" section of this web site.

Atención
Este es un aviso de la oficina de Cal[redacted] Nuevo México, acerca de las emisiones producidas

NOTICE

Targa Northern Delaware, LLC announces its application submittal to the New Mexico Environment Department for an air quality permit for the **modification** of its **Road Runner Gas Processing Plant** facility. The expected date of application submittal to the Air Quality Bureau is **December 13, 2022.**

The exact location for the proposed facility known as, **Road Runner Gas Processing Plant**, is at latitude **32** deg, **15** min, **56.71** sec and longitude **-104** deg, **6** min, **29.97** sec. The approximate location of this facility is **1.7** miles south-west of Loving in Eddy County, New Mexico.

The proposed **modification** consists of updating NSR Permit 7200-M3 based on the most current plans, updating representations, and removing one proposed processing train from the permit. The estimated maximum quantities of any regulated air contaminant will be as follows in pound per hour (pph) and tons per year (tpy) and could change slightly during the course of the Department's review:

Pollutant:	Pounds per hour	Tons per year
Particulate Matter (PM)	5 pph	19 tpy
PM_{10}	5 pph	18 tpy
$PM_{2.5}$	5 pph	17 tpy
Sulfur Dioxide (SO_2)	2,764 pph	163 tpy
Nitrogen Oxides (NO_x)	5,241 pph	172 tpy
Carbon Monoxide (CO)	10,443 pph	249 tpy
Volatile Organic Compounds (VOC) (with fugitives)	8,952 pph	328 tpy
Volatile Organic Compounds (VOC) (without fugitives)	8,923 pph	201 tpy
Total sum of all Hazardous Air Pollutants (HAPs)	455 pph	24.9 tpy
Toxic Air Pollutant (TAP)	n/a pph	n/a tpy
Green House Gas Emissions as Total CO_2e	n/a	467,511 tpy

The standard and maximum operating schedules of the facility will be 24 hours a day, 7 days a week and a maximum of 52 weeks per year.
The owner and/or operator of the Facility is: **Targa Northern Delaware, LLC; 6 Desta Drive, Suite 3300, Midland, TX 79705**

If you have any comments about the construction or operation of this facility, and you want your comments to be made as part of the permit review process, you must submit your comments in writing to this address: Permit Programs Manager; New Mexico Environment Department; Air Quality Bureau; 525 Camino de los Marquez, Suite 1; Santa Fe, New Mexico; 87505-1816. Other comments and questions may be submitted verbally. (505) 476-4300; 1 800 224-7009.

With your comments, please refer to the company name and facility name, or send a copy of this notice along with your comments. This information is necessary since the Department may have not yet received the permit application. Please include a legible return mailing address. Once the Department has completed its preliminary review of the application and its air quality impacts, the Department's notice will be published in the legal section of a newspaper circulated near the facility location.

Atención

Este es un aviso de la oficina de Calidad del Aire del Departamento del Medio Ambiente de Nuevo México, acerca de las emisiones producidas por un establecimiento en esta área. Si usted desea información en español, por favor comuníquese con esa oficina al teléfono 505-372-8373.

Notice of Non-Discrimination
NMED does not discriminate on the basis of race, color, national origin, disability, age or sex in the administration of its programs or activities, as required by applicable laws and regulations. NMED is responsible for coordination of compliance efforts and receipt of inquiries concerning non-discrimination requirements implemented by 40 C.F.R. Part 7, including Title VI of the Civil Rights Act of 1964, as amended; Section 504 of the Rehabilitation Act of 1973; the Age Discrimination Act of 1975, Title IX of the Education Amendments of 1972, and Section 13 of the Federal Water Pollution Control Act Amendments of 1972. If you have any questions about this notice or any of NMED's non-discrimination programs, policies or procedures, or if you believe that you have been discriminated against with respect to a NMED program or activity, you may contact: Kathryn Becker, Non-Discrimination Coordinator, NMED, 1190 St. Francis Dr., Suite N4050, P.O. Box 5469, Santa Fe, NM 87502, (505) 827-2855, nd.coordinator@state.nm.us. You may also visit our website at https://www.env.nm.gov/non-employee-discrimination-complaint-page/ to learn how and where to file a complaint of discrimination.


UNITED STATES
POST OFFICE
Loving NM 88256

Obituary

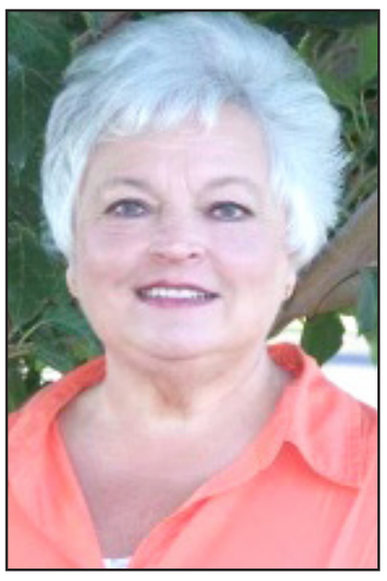

Diana Klontz

Memorial services are scheduled for 10 a.m. Wednesday, Dec. 14, at Hermosa Church of Christ for Diana Lynn Klontz of Artesia.

Klontz, 76, passed away Friday, Dec. 9, 2022, in Artesia.

Michael Joiner will officiate the services. Cremation has taken place under the direction of Terpening & Son Mortuary.

Diana was born Oct. 19, 1946, in Augusta, Kans., the daughter of William Jesse and Doris Ramons (Dennett) Cox.

In their early married years, she and Paul took in a host of foster children in North Carolina. After moving to New Mexico, she continued her love of and service to children by teaching Bible class and other related activities.

She was a bookkeeper for Mack Chase, First National Bank and Moncor Bank. Before her retirement, she was secretary at Hermosa Church of Christ.

Cooking, baking, crochet and cross stitch were Diana's love language. She passed these skills on to her kids and grandkids. She never lost her love of the coast and enjoyed fishing.

She bought her first personal computer in 1985, taught herself how to use it, and continued to enjoy learning technology.

Survivors include her husband, Paul Klontz; son Vaughn Klontz and wife Carla; daughter Vana Conner and husband Perry; sisters Anita Markman, and Billie Jo Kirschner and husband Buddy; grandchildren Bryan Klontz and wife Amber, Blake Klontz and wife Paige, Kaci Whitmire and husband Matt, Cayla Nelson, Caton Conner, and Kabryn Frost and husband Grady; and great-grandchildren Layton Whitmire, Kaydence Klontz, Tynlee Whitmire, Kenzie Klontz, Kailee Klontz and Ashlynn Klontz.

She was preceded in death by her parents and brother Bobby Cox.

Arrangements are under the direction of Terpening & Son Mortuary. Condolences may be expressed online at www.artesiafunerals.com.

Some Albuquerque-area hospitals dealing with surge

ALBUQUERQUE (AP) — Some hospitals in the Albuquerque area are taking measures to free up more space amid a surge of patients that are pushing some hospitals beyond their licensed capacity.

The University of New Mexico Hospital has opened a tent outside the emergency room to triage adult patients. Doctors at some local hospitals said they are busier than they were during the past two winters, when the COVID-19 pandemic was driving up hospital admissions.

They also say respiratory syncytial virus, influenza and COVID are all fueling the rise in hospitalizations.

Physicians at Albuquerque-area hospitals held a briefing Monday morning during which they asked the public to wear masks in some settings, stay up to date on COVID and influenza vaccines, and not to go into public when sick.

"The last couple of years, when we were masking, there was very, very little influenza, very little colds, very little RSV. So we know that masking works," Dr. Jason Mitchell, the chief medical officer at Presbyterian Healthcare Services, told the Journal.

Physicians at UNMH said that at any given time, about 100 adults and 20 children are waiting for a hospital bed and they have warned people to expect long wait times in the emergency room.

Assistance Funds

A GoFundMe account has been established for Mike Porras of Lake Arthur, who is recovering from open-heart surgery. To donate, visit www.gofundme.com/f/miracle-mike-porras.

Biden signs gay marriage legislation into law, calling it 'a blow against hate'

WASHINGTON, D.C. (AP) — A celebratory crowd of thousands bundled up on a chilly Tuesday afternoon to watch President Joe Biden sign gay marriage legislation into law, a joyful ceremony that was tempered by the backdrop of an ongoing conservative backlash over gender issues.

"This law and the love it defends strike a blow against hate in all its forms," Biden said on the South Lawn of the White House. "And that's why this law matters to every single American."

Singers Sam Smith and Cyndi Lauper performed. Vice President Kamala Harris recalled officiating at a lesbian wedding in San Francisco. And the White House played a recording of Biden's television interview from a decade ago, when he caused a political furor by unexpectedly disclosing his support for gay marriage. Biden was vice president at the time, and President Barack Obama had not yet endorsed the idea.

"I got in trouble," Biden joked of that moment. Three days later, Obama himself publicly endorsed gay marriage.

Lawmakers from both parties attended Tuesday's ceremony, reflecting the growing acceptance of same-sex unions, once among the country's most contentious issues.

Senate Majority Leader Chuck Schumer, D-N.Y., wore the same purple tie to the ceremony that he wore to his daughter Alison's wedding. She and her wife are expecting their first child in the spring.

"Thanks to the millions out there who spent years pushing for change, and thanks to the dogged work of my colleagues, my grandchild will get to live in a world that respects and honors their mothers' marriage," he said.

House Speaker Nancy Pelosi told the crowd that "inside maneuvering only takes us so far," and she thanked activists adding impetus with "your impatience, your persistence and your patriotism."

Despite Tuesday's excitement, there was concern about the nationwide proliferation of conservative policies on gender issues at the state level.

Biden criticized the "callous, cynical laws introduced in the states targeting transgender children, terrifying families and criminalizing doctors who give children the care they need."

"Racism, antisemitism, homophobia, transphobia, they're all connected," Biden said. "But the antidote to hate is love."

Among the attendees were the owner of Club Q, a gay nightclub in Colorado where five people were killed in a shooting last month, and two survivors of the attack. The suspect has been charged with hate crimes.

"It's not lost on me that our struggle for freedom hasn't been achieved," said Kelley Robinson, president of the Human Rights Campaign. "But this is a huge step forward, and we have to celebrate the victories we achieve and use that to fuel the future of the fight."

Robinson attended the ceremony with her wife and 1-year-old child.

"Our kids are watching this moment," she said. "It's very special to have them here and show them that we're on the right side of history."

The new law is intended to safeguard gay marriages if the U.S. Supreme Court ever reverses Obergefell v. Hodges, its 2015 decision legalizing same-sex unions nationwide. The new law also protects interracial marriages. In 1967, the Supreme Court in Loving v. Virginia struck down laws in 16 states barring interracial marriage.

The signing marks the culmination of a monthslong bipartisan effort sparked by the Supreme Court's decision in June to overturn Roe v. Wade, the 1973 ruling that made abortion available across the country.

In a concurring opinion in the case that overturned Roe, Justice Clarence Thomas suggested revisiting other decisions, including the legalization of gay marriage, generating fear that more rights could be imperiled by the court's conservative majority. Thomas did not reference interracial marriage with the other cases he said should be reconsidered.

Lawmakers crafted a compromise that was intended to assuage conservative concerns about religious liberty, such as ensuring churches could still refuse to perform gay marriages.

In addition, states would not be required to issue marriage licenses to same-sex couples if the court overturns its 2015 ruling. But they will be required to recognize marriages conducted elsewhere in the country.

A majority of Republicans in Congress still voted against the legislation. However, enough supported it to sidestep a filibuster in the Senate and ensure its passage.

Tuesday's ceremony marks another chapter in Biden's legacy on gay rights, which includes his surprise endorsement of marriage equality in 2012.

"What this is all about is a simple proposition: Who do you love?" Biden said then on NBC's "Meet the Press." "Who do you love and will you be loyal to the person you love? And that is what people are finding out is what all marriages at their root are about."

A Gallup poll showed only 27% of U.S. adults supported same-sex unions in 1996, when President Bill Clinton signed the Defense of Marriage Act, which said the federal government would only recognize heterosexual marriages. Biden voted for the legislation.

By the time of Biden's 2012 interview, gay marriage remained controversial, but support had expanded to roughly half of U.S. adults, according to Gallup. Earlier this year, 71% said same-sex unions should be recognized by law.

Biden has pushed to expand LGBT rights since taking office. He reversed President Donald Trump's efforts to strip transgender people of anti-discrimination protections. His administration includes the first openly gay Cabinet member, Transportation Secretary Pete Buttigieg, and the first transgender person to receive Senate confirmation, Assistant Secretary for Health Rachel Levine.

Inflation

(Continued from Page 1)

... to a record 19,000 families across Arizona last month.

"They're eating snacks and granola all day long," Rosa Davila, an unemployed single mother, said of her three teenagers while waiting in line for a package Tuesday. "The food bank really resolves things for us."

Alma Quintera, also waiting in her car, said that even with her husband working full time as a house painter, they have to visit the food bank two or three times a month to adequately feed their three school-age children.

"The high prices have really affected us — the rent, the bills and especially the food," she said.

Jerry Brown, a spokesman for St. Mary's, said the food bank's main Phoenix location last week distributed packages to 4,717 families, up 63% from the same week a year ago.

Economists say the latest inflation figures, though, suggest the likelihood of some relief in the coming months.

"Inflation was terrible in 2022, but the outlook for 2023 is much better," said Bill Adams, chief economist for Comerica Bank. "Supply chains are working better, business inventories are higher, ending most of the shortages that fueled inflation in 2020."

President Joe Biden called the inflation report "welcome news for families across the country" and noted that lower auto and toy prices should benefit holiday shoppers. Still, Biden acknowledged that inflation might not return to "normal levels" until the end of next year.

One sign of progress in November's figures was that prices for new cars didn't budge from October. On average, new cars are still 7.2% costlier than they were a year ago. But that's down from a 13.2% year-over-year jump in April, which was the highest on records dating to 1953.

The decline in new-car prices helps illustrate how supply chain snarls, which have unwound for most goods, are also easing for semiconductors and other key automotive parts. Economists say this should enable automakers to boost production and give buyers an expanded supply of vehicles.

It also suggests that the Fed's aggressive interest rate hikes, which have made it more expensive to borrow for homes, cars and on credit cards, have begun to slow demand and limit the ability of auto dealers to charge more.

Wall Street welcomed the better-than-expected inflation data as providing further support for the Fed to slow and potentially pause its rate hikes by early next year.

On Wednesday, the Fed is widely expected to raise its benchmark rate by a half-point, its seventh hike this year. The move would follow four three-quarter-point hikes in a row. A half-point increase would put the Fed's key short-term rate in a range of 4.25% to 4.5%, the highest in 15 years.

The increase will further raise loan rates for consumers and businesses. Economists have warned that in continuing to tighten credit to fight inflation, the Fed is likely to cause a recession next year.

"There's growing evidence that the worst of the inflation scare may be in the rearview mirror," said Jim Baird, an economist at Plante Moran Financial Advisers. "On the horizon is the potential for a recession — the next hazard in the road that policymakers will need to navigate the economy around or potentially through."

Fed Chair Jerome Powell has said he is tracking price trends in three separate categories to best understand the likely path of inflation: Goods, excluding volatile food and energy costs; housing, which includes rents and the cost of homeownership; and services excluding housing, such as auto insurance, pet services and education.

In a speech two weeks ago in Washington, Powell noted that there had been some progress in easing inflation in goods and housing but not so in most services. Some of those trends extended into last month's data, with goods prices, excluding food and energy, falling 0.5% from October to November, the second straight monthly drop.

Housing costs, which make up nearly a third of the consumer price index, are still rising. But real-time measures of apartment rents and home prices are starting to drop after having posted sizzling price acceleration at the height of the pandemic. Powell said those declines will likely emerge in government data next year and should help reduce overall inflation.

As a result, Powell's biggest focus has been on services, which he said are likely to stay persistently high. In part, that's because sharp increases in wages are becoming a key contributor to inflation. Services companies, like hotels and restaurants, are particularly labor-intensive. And with average wages growing at a brisk 5%-6% a year, price pressures keep building in that sector of the economy.

Services businesses tend to pass on some of their higher labor costs to their customers by charging more, thereby perpetuating inflation. Higher pay also fuels more consumer spending, which allows companies to raise prices.

Prices for many services kept rising in November. Dental care jumped 1.1% just from October and is 6.4% costlier than it was a year ago. Restaurant prices rose 0.5%. They're 8.5% higher than a year earlier.

Auto insurance prices jumped 0.9% in November and are 13.4% more expensive than a year earlier. The average cost of an auto repair rose 1.3% last month and 11.7% over the past year.

Yet even in services, excluding housing, there were some signs of cooling prices. The cost of car rentals, airline fares and hotel prices, for example, all dropped in November.

Overall, a measure that approximates services excluding rent was unchanged in November, after having dipped 0.1% in October. That measure had soared 1.1% in both April and June this year.

NOTICE OF AIR QUALITY PERMIT APPLICATION

Targa Northern Delaware, LLC announces its application submittal to the New Mexico Environment Department for an air quality permit for the modification of its Road Runner Gas Processing Plant facility. The expected date of application submittal to the Air Quality Bureau is Tuesday, December 13, 2022.

The exact location for the proposed facility known as, Road Runner Gas Processing Plant, is at latitude 32 deg, 15 min, 56.71 sec and longitude -104 deg, 6 min, 29.97 sec. The approximate location of this facility is 1.7 miles south-west of Loving in Eddy County, New Mexico .

The proposed modification consists of updating NSR Permit 7200-M3 based on the most current plans, updating representations, and removing one proposed processing train from the permit. The estimated maximum quantities of any regulated air contaminant will be as follows in pound per hour (pph) and tons per year (tpy) and could change slightly during the course of the Department's review:

Pollutant:	Pounds per hour	Tons per year
Particulate Matter (PM)	5 pph	19 tpy
PM 10	5 pph	18 tpy
PM 2.5	5 pph	17 tpy
Sulfur Dioxide (SO2)	2,764 pph	163 tpy
Nitrogen Oxides (NOx)	5,241 pph	172 tpy
Carbon Monoxide (CO)	10,443 pph	249 tpy
Volatile Organic Compounds (VOC) (with fugitives)	8,952 pph	328 tpy
Volatile Organic Compounds (VOC) (without fugitives)	8,923 pph	201 tpy
Total sum of all Hazardous Air Pollutants (HAPs)	455 pph	24.9 tpy
Toxic Air Pollutant (TAP)	n/a pph	n/a tpy
Green House Gas Emissions as Total CO2e	n/a	467,511 tpy

The standard and maximum operating schedules of the facility will be 24 hours a day, 7 days a week and a maximum of 52 weeks per year.
The owner and/or operator of the Facility is: Targa Northern Delaware, LLC; 6 Desta Drive, Suite 3300, Midland, TX 79705

If you have any comments about the construction or operation of this facility, and you want your comments to be made as part of the permit review process, you must submit your comments in writing to this address: Permit Programs Manager; New Mexico Environment Department; Air Quality Bureau; 525 Camino de los Marquez, Suite 1; Santa Fe, New Mexico; 87505-1816. Other comments and questions may be submitted verbally. (505) 476-4300; 1 800 224-7009.

Please refer to the company name and site name, or send a copy of this notice along with your comments, since the Department may have not yet received the permit application. Please include a legible return mailing address with your comments. Once the Department has performed a preliminary review of the application and its air quality impacts, the Department's notice will be published in the legal section of a newspaper circulated near the facility location.

General information about air quality and the permitting process, and links to the regulations can be found at the Air Quality Bureau's website: www.env.nm.gov/air-quality/permitting-section-home-page/. The regulation dealing with public participation in the permit review process is 20.2.72.206 NMAC.

Attención

Este es un aviso de la oficina de Calidad del Aire del Departamento del Medio Ambiente de Nuevo México, acerca de las emisiones producidas por un establecimiento en esta área. Si usted desea información en español, por favor comuníquese con esa oficina al teléfono 505-372-8373.

Notice of Non-Discrimination

NMED does not discriminate on the basis of race, color, national origin, disability, age or sex in the administration of its programs or activities, as required by applicable laws and regulations. NMED is responsible for coordination of compliance efforts and receipt of inquiries concerning non-discrimination requirements implemented by 40 C.F.R. Part 7, including Title VI of the Civil Rights Act of 1964, as amended; Section 504 of the Rehabilitation Act of 1973; the Age Discrimination Act of 1975, Title IX of the Education Amendments of 1972, and Section 13 of the Federal Water Pollution Control Act Amendments of 1972. If you have any questions about this notice or any of NMED's non-discrimination programs, policies or procedures, or if you believe that you have been discriminated against with respect to a NMED program or activity, you may contact: Kathryn Becker, Non-Discrimination Coordinator, NMED, 1190 St. Francis Dr., Suite N4050, P.O. Box 5469, Santa Fe, NM 87502, (505) 827-2855, nd.coordinator@state.nm.us. You may also visit our website at https://www.env.nm.gov/non-employee-discrimination-complaint-page/ to learn how and where to file a complaint of discrimination.



Did Rufus loose his way? Find him with a lost and found ad! Call 746-3524 ask for the classifieds.



If you want buyers to notice your treasures for sale...List it in the Artssia Daily Press, Classifieds Section. 746-3524

ABCDEFGHIJKLMNOPQRSTUVWXYZ

CRYPTO FUN

Determine the code to reveal the answer!

Solve the code to discover words related to driver safety.
Each number corresponds to a letter.
(Hint: 2 = E)

A. 13 3 21 21 25 21

Clue: Reflective device

B. 11 2 23 5 24 2 19 5

Clue: Safety device

C. 17 2 18 2 9 11 3 6 2

Clue: Style of driving

D. 20 23 7 5 3 25 9

Clue: With care

Answers: A. mirror B. seat belt C. defensive D. caution

SUDOKU

4	9				2		7	3
6	7	2	1			4		
				9			6	
				4	1		3	6
2	1		5			7	8	
					3	2	1	
			4		7			9
		5	9	1		3	4	
			3		8		2	

Level: Beginner

Fun By The Numbers

Like puzzles? Then you'll love sudoku. This mind-bending puzzle will have you hooked from the moment you square off, so sharpen your pencil and put your sudoku savvy to the test!

Here's How It Works:

Sudoku puzzles are formatted as a 9x9 grid, broken down into nine 3x3 boxes. To solve a sudoku, the numbers 1 through 9 must fill each row, column and box. Each number can appear only once in each row, column and box. You can figure out the order in which the numbers will appear by using the numeric clues already provided in the boxes. The more numbers you name, the easier it gets to solve the puzzle!

ANSWER:

4	9	1	6	8	2	5	7	3
6	7	2	1	3	5	4	9	8
3	5	8	7	9	4	1	6	2
5	8	7	2	4	1	9	3	6
2	1	3	5	6	9	7	8	4
9	6	4	8	7	3	2	1	5
1	3	6	4	2	7	8	5	9
8	2	5	9	1	6	3	4	7
7	4	9	3	5	8	6	2	1

Legal Notice

NOTICE OF AIR QUALITY PERMIT APPLICATION

Targa Northern Delaware, LLC announces its application submittal to the New Mexico Environment Department for an air quality permit for the **modification of its Road Runner Gas Processing Plant** facility. The expected date of application submittal to the Air Quality Bureau is **Tuesday, December 13, 2022.**

The exact location for the proposed facility known as, **Road Runner Gas Processing Plant,** is at latitude **32 deg, 15 min, 56.71 sec and longitude -104 deg, 6 min, 29.97 sec.** The approximate location of this facility is **1.7 miles south-west of Loving in Eddy** County, New Mexico

.

The proposed **modification** consists of updating NSR Permit 7200-M3 based on the most current plans, updating representations, and removing one proposed processing train from the permit. The estimated maximum quantities of any regulated air contaminant will be as follows in pound per hour (pph) and tons per year (tpy) and could change slightly during the course of the Department's review:

Pollutant:	Pounds per hour	Tons per year
Particulate Matter (PM)	5 pph	19 tpy
PM 10	5 pph	18 tpy
PM 2.5	5 pph	17 tpy
Sulfur Dioxide (SO2)	2,764 pph	163 tpy
Nitrogen Oxides (NOx)	5,241 pph	172 tpy
Carbon Monoxide (CO)	10,443 pph	249 tpy
Volatile Organic Compounds (VOC) (with fugitives)	8,952 pph	328 tpy
Volatile Organic Compounds (VOC) (without fugitives)	8,923 pph	201 tpy
Total sum of all Hazardous Air Pollutants (HAPs)	455 pph	24.9 tpy
Toxic Air Pollutant (TAP)	n/a pph	n/a tpy
Green House Gas Emissions as Total CO2e	n/a	467,511 tpy

The standard and maximum operating schedules of the facility will be 24 hours a day, 7 days a week and a maximum of 52 weeks per year.
The owner and/or operator of the Facility is: **Targa Northern Delaware, LLC; 6 Desta Drive, Suite 3300, Midland, TX 79705**

If you have any comments about the construction or operation of this facility, and you want your comments to be made as part of the permit review process, you must submit your comments in writing to this address: Permit Programs Manager; New Mexico Environment Department; Air Quality Bureau; 525 Camino de los Marquez, Suite 1; Santa Fe, New Mexico; 87505-1816. Other comments and questions may be submitted verbally. (505) 476-4300; 1 800 224-7009.

Please refer to the company name and site name, or send a copy of this notice along with your comments, since the Department may have not yet received the permit application. Please include a legible return mailing address with your comments. Once the Department has performed a preliminary review of the application and its air quality impacts, the Department's notice will be published in the legal section of a newspaper circulated near the facility location.

General information about air quality and the permitting process, and links to the regulations can be found at the Air Quality Bureau's website: www.env.nm.gov/air-quality/permitting-section-home-page/. The regulation dealing with public participation in the permit review process is 20.2.72.206 NMAC.

Attención

Este es un aviso de la oficina de Calidad del Aire del Departamento del Medio Ambiente de Nuevo México, acerca de las emisiones producidas por un establecimiento en esta área. Si usted desea información en español, por favor comuníquese con esa oficina al teléfono 505-372-8373.

Notice of Non-Discrimination

NMED does not discriminate on the basis of race, color, national origin, disability, age or sex in the administration of its programs or activities, as required by applicable laws and regulations. NMED is responsible for coordination of compliance efforts and receipt of inquiries concerning non-discrimination requirements implemented by 40 C.F.R. Part 7, including Title VI of the Civil Rights Act of 1964, as amended; Section 504 of the Rehabilitation Act of 1973; the Age Discrimination Act of 1975, Title IX of the Education Amendments of 1972, and Section 13 of the Federal Water Pollution Control Act Amendments of 1972. If you have any questions about this notice or any of NMED's non-discrimination programs, policies or procedures, or if you believe that you have been discriminated against with respect to a NMED program or activity, you may contact: Kathryn Becker, Non-Discrimination Coordinator, NMED, 1190 St. Francis Dr., Suite N4050, P.O. Box 5469, Santa Fe, NM 87502, (505) 827-2855, nd.coordinator@state.nm.us. You may also visit our website at https://www.env.nm.gov/non-employee-discrimination-complaint-page/ to learn how and where to file a complaint of discrimination.

Published in the Artesia Daily Press, Artesia, N.M., Dec. 13, 2022 Legal No. 26389.





ARIES Đ Mar 21/Apr 20
Aries, no matter how much you try to tip the odds in your favor, this week is much more about the luck of the draw. Keep a positive outlook and things may turn out in your favor.



TAURUS ~ Apr 21/May 21
Taurus, if winters chill is getting you down, you may want to plan a getaway to somewhere warmer. That may be just what you need to recharge.



GEMINI ~ May 22/Jun 21
The two sides of your personality are lately at odds with one another, Gemini. You have to make an important decision, so seek out a friend for advice.



CANCER ~ Jun 22/ Jul 22
Cancer, you lean toward an optimistic view on most things, but it is alright to be realistic at some points along the way, or even slightly skeptical. Balance is key.



LEO ~ Jul 23/Aug 23
Leo, if you are feeling under the weather this week, you will have to put on a smile and push through. It is the holidays, after all. Seek as much help as others can muster.



VIRGO ~ Aug 24/Sept 22
Virgo, you are on borrowed time regarding your finances. Take a careful look at your budget this week and make the tweaks necessary to stay afloat if income wanes.



LIBRA ~ Sept 23/Oct 23
A companion animal in your life needs some attention, Libra. There may be some vet bills to contend with, but luckily you can handle that without much issue.



SCORPIO ~ Oct 24/Nov 22
The activity you have been turning to provide mental stimulation just may not be cutting it any longer. Start to explore some other options and see if there may be a better fit, Scorpio.



SAGITTARIUS ~ Nov 23/Dec 21
A health issue that has been getting the better of you for some time will be resolved for in the days to come, Sagittarius. It'll be birthday good news. Start celebrating.



CAPRICORN ~ Dec 22/Jan 20
Capricorn, after a tumultuous few weeks, things in your life finally settle down. Embrace the opportunity to rest and do not take on any new projects until next year.

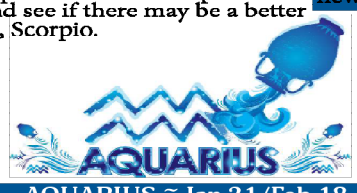

AQUARIUS ~ Jan 21/Feb 18
Aquarius, things may not be going completely according to plan on the professional front. But at home you have gotten into a solid groove. Use this win to boost your mood.



PISCES ~ Feb 19/Mar 20
There is much more to a situation than meets the eye, Pisces. Delve deeper to learn about a persons true motivation.

From:	Jaimy Karacaoglu
To:	don@carlsbadradio.com
Cc:	Rob Liles
Subject:	Road Runner Gas Processing Plant Public Service Announcement
Date:	Friday, December 2, 2022 9:54:46 AM
Attachments:	image001.png

Dear Carlsbad Radio, KAMQ 1240 AM,

Per New Mexico Administrative Code 20.2.72.203.B NMAC and according to the Guidance for Public Notice for Air Quality Permit Applications – **(5) Notifications: Submittal of Public Service Announcement (PSA):** A public service announcement required for permits and significant permit revisions must be submitted to at least one radio or television station, which services the municipality, or county which the facility is or will be located. **Therefore, based on the above, we respectfully ask you to air the information shown below as a Public Service Announcement.**

The public service announcement request must contain the following information about the facility or proposed facility (20.2.72.203.D NMAC).

a. The name: **Road Runner Gas Processing Plant,** location: **latitude 32 deg, 15 min, 56.71 sec and longitude -104 deg, 6 min, 29.97 sec. The approximate location of this facility is 1.7 miles south-west of Loving in Eddy County, New Mexico.** and type of business: **gas processing plant.**
b. The name and principal owner or operator: **Targa Northern Delaware, LLC** – owner and operator.
c. The type of process or change for which the permit is sought: **NSR Significant Revision – updates in accordance with most current plans, updating representations, and removing one proposed processing train from the permit.**
d. Locations where the notices have been posted in Loving, NM: **(1) Road Runner Gas Processing Plant Facility Entrance – 1098 Bounds Rd, Loving, NM 88256 (2) Loving Allsup's Convenience Store – 105 N 8th St, Loving, NM 88256 (3) Village of Loving City Hall – 415 W Cedar St., Loving, NM 88256 (4) Loving USPS – 402 W Beech St., Loving, NM 88256**
e. The Department's address or telephone number to which comments may be directed: **Permit Programs manager; New Mexico Environment Department; Air Quality Bureau; 525 Camino de los Marquez, Suite 1, Santa Fe, New Mexico; 87505-1816; (505) 476-4300; 1 (800) 224-7009.**

Regards,
Jaimy Karacaoglu
Consultant

P 505.266.6611 M 410.903.0750
9400 Holly Avenue NE, Building 3, Suite B, Albuquerque, NM 87122
Email: jaimy.karacaoglu@trinityconsultants.com



Connect with us: LinkedIn / Facebook / Twitter / YouTube / trinityconsultants.com

Stay current on environmental issues. Subscribe today to receive Trinity's free *EHS Quarterly*.

Submittal of Public Service Announcement – Certification

I, Jaimy Karacaoglu, the undersigned, certify that on **December 2, 2022**, submitted a public service announcement to **Carlsbad Radio, KAMQ 1240 AM** that serves theVillage of **Loving**, **Eddy County**, New Mexico, in which the source is or is proposed to be located and that **Carlsbad Radio, KAMQ 1240 AM DID NOT RESPOND.**

Signed this 6 day of December, 2022.

Signature

12/6/2022
Date

Jaimy Karacaoglu
Printed Name

Consultant with Trinity Consultants
Title {APPLICANT OR RELATIONSHIP TO APPLICANT}


U.S. Postal Service™
CERTIFIED MAIL® RECEIPT
Domestic Mail Only
For delivery information, visit our website
OFFICIAL
Postage $
Certified Fee
Return Receipt Fee (Endorsement Required)
Restricted Delivery Fee (Endorsement Required)
Total Postage & Fees
$0.00
US POSTAGE
12/13/2022
062S12395454
87113
000024305
7014 2870 0001 4722 9897
Sent To
Street & Apt. No. or PO Box No.
City, State, ZIP+4
Susan D. & John E. Blackmon
3501 Bonniebrook Drive
Plano, TX 75075
PS Form 3800,


U.S. Postal Service™
CERTIFIED MAIL® RECEIPT
Domestic Mail Only
For delivery information, visit our website
OFFICIAL
Postage $
Certified Fee
Return Receipt Fee (Endorsement Required)
Restricted Delivery Fee (Endorsement Required)
Total Postage & Fees
$0.00
US POSTAGE
12/13/2022
062S12395454
87113
000024307
7014 2870 0001 4722 9910
Sent To
Street & Apt. No. or PO Box No.
City, State, ZIP+4
Mrs. F.W. Sooby
921 Montcrest Drive
Redding, CA 96003
PS Form 3800,


U.S. Postal Service™
CERTIFIED MAIL® RECEIPT
Domestic Mail Only
For delivery information, visit our website at www.usps.com®.
OFFICIAL
Postage $
Certified Fee
Return Receipt Fee (Endorsement Required)
Restricted Delivery Fee (Endorsement Required)
Total Postage &
$0.00
US POSTAGE
12/13/2022
062S12395454
87113
000024309
7014 2870 0001 4722 9934
Sent To
Street & Apt. No., or PO Box No.
City, State, ZIP+4
State of New Mexico
310 Old Santa Fe Trail
Santa Fe, NM 87504
PS Form 3800,


U.S. Postal Service™
CERTIFIED MAIL® RECEIPT
Domestic Mail Only
For delivery information, visit our website at www.usps.com®
OFFICIAL
Postage $
Certified Fee
Return Receipt Fee (Endorsement Required)
Restricted Delivery Fee (Endorsement Required)
Total Postage & Fees
$0.00
US POSTAGE
12/13/2022
062S12395454
87113
000024308
7014 2870 0001 4722 9927
Sent To
Street & Apt. No or PO Box No.
City, State, ZIP+4
Henry McDonald
P.O. Box 597
Loving, NM 88256
PS Form 3800,


U.S. Postal Service™
CERTIFIED MAIL® RECEIPT
Domestic Mail Only
For delivery information, visit our website
OFFICIAL
Postage $
Certified Fee
Return Receipt Fee (Endorsement Required)
Restricted Delivery Fee (Endorsement Required)
Total Postage & Fees
$0.00
US POSTAGE
12/13/2022
062S12395454
87113
000024310
7014 2870 0001 4722 9941
Sent To
Street & Apt. No or PO Box No.
City, State, ZIP+4
Mitchell & Wendy Ballard
273 Higby Rd.
Loving, NM 88256
PS Form 3800,


U.S. Postal Service™
CERTIFIED MAIL® RECEIPT
Domestic Mail Only
For delivery information, visit our website at www.usps.com®
OFFICIAL
Postage $
Certified Fee
Return Receipt Fee (Endorsement Required)
Restricted Delivery Fee (Endorsement Required)
Total Postage & Fees
$0.00
US POSTAGE
12/13/2022
062S12395454
87113
000024311
7014 2870 0001 4722 9958
Sent To
Street & Apt. No or PO Box No.
City, State, ZIP+4
Antonio & Gloria Onsurez
P.O. Box 598
Loving, NM 88256
PS Form 3800,


7014 2870 0001 4722 9965
U.S. Postal Service™
CERTIFIED MAIL® RECEIPT
Domestic Mail Only
For delivery information, visit our website
OFFICIAL
Postage $
Certified Fee
Return Receipt Fee (Endorsement Required)
Restricted Delivery Fee (Endorsement Required)
Total Postage
$0.00
US POSTAGE
12/13/2022
062S12395454
87113
000024312
Sent To
Street & Apt. No
or PO Box No.
City, State, ZIP+
Southwestern Public Service Co.
P.O. Box 1979
Denver, CO 80201
PS Form 3800,


7014 2870 0001 4722 9972
U.S. Postal Service™
CERTIFIED MAIL® RECEIPT
Domestic Mail Only
For delivery information, visit our website
OFFICIAL
Postage $
Certified Fee
Return Receipt Fee (Endorsement Required)
Restricted Delivery Fee (Endorsement Required)
Total Postage & Fees
$0.00
US POSTAGE
12/13/2022
062S12395454
87113
000024313
Sent To
Street & Apt. No
or PO Box No.
City, State, ZIP+
Joel Santos Onsurez
P.O. Box 1058
Loving, NM 88256
PS Form 3800,

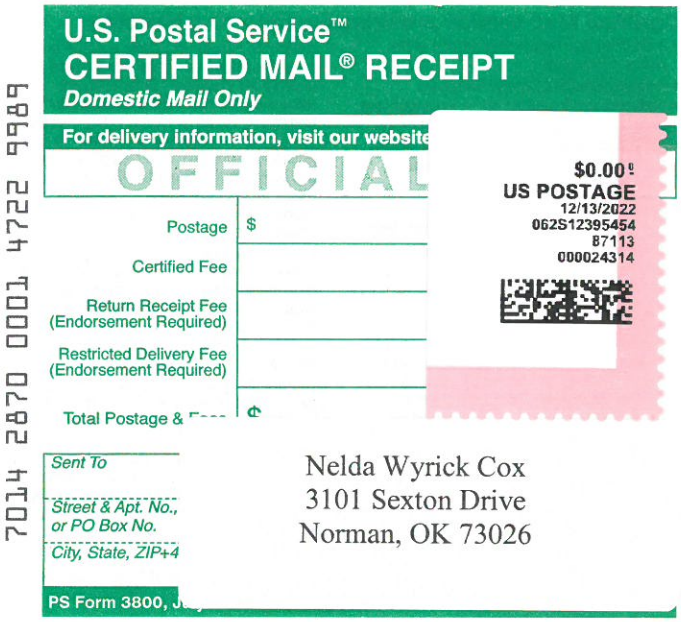
7014 2870 0001 4722 9989
U.S. Postal Service™
CERTIFIED MAIL® RECEIPT
Domestic Mail Only
For delivery information, visit our website
OFFICIAL
Postage $
Certified Fee
Return Receipt Fee (Endorsement Required)
Restricted Delivery Fee (Endorsement Required)
Total Postage &
$0.00
US POSTAGE
12/13/2022
062S12395454
87113
000024314
Sent To
Street & Apt. No.,
or PO Box No.
City, State, ZIP+4
Nelda Wyrick Cox
3101 Sexton Drive
Norman, OK 73026
PS Form 3800,


7014 2870 0001 4722 9996
U.S. Postal Service™
CERTIFIED MAIL® RECEIPT
Domestic Mail Only
For delivery information, visit our website
OFFICIAL
Postage $
Certified Fee
Return Receipt Fee (Endorsement Required)
Restricted Delivery Fee (Endorsement Required)
Total Postage
$0.00
US POSTAGE
12/13/2022
062S12395454
87113
000024315
Sent To
Street & Apt. No
or PO Box No.
City, State, ZIP+
George A. Huffer
4713 Craig Ave.
Metaire, LA 70003
PS Form 3800,


7014 2870 0001 4723 0008
U.S. Postal Service™
CERTIFIED MAIL® RECEIPT
Domestic Mail Only
For delivery information, visit our website
OFFICIAL
Postage $
Certified Fee
Return Receipt Fee (Endorsement Required)
Restricted Delivery Fee (Endorsement Required)
Total Postage
$0.00
US POSTAGE
12/13/2022
062S12395454
87113
000024316
Sent To
Street & Apt. N
or PO Box No.
City, State, ZIF
Ryan M. Zuniga
24 Mesquite Lane
Artesia, NM 88210
PS Form 3800


7014 2870 0001 4718 5612
U.S. Postal Service™
CERTIFIED MAIL® RECEIPT
Domestic Mail Only
For delivery information, visit our website at www.usps.com®
OFFICIAL
Postage $
Certified Fee
Return Receipt Fee (Endorsement Required)
Restricted Delivery Fee (Endorsement Required)
Total Postage & Fees
$0.00
US POSTAGE
12/13/2022
062S12395454
87113
000024317
Sent To
Street & Apt. No.
or PO Box No.
City, State, ZIP+
Pablo Hernandez, Maria Hernandez Trust
1971 Pecos Hwy
Loving, NM 88256
PS Form 3800,


U.S. Postal Service™
CERTIFIED MAIL® RECEIPT
Domestic Mail Only
For delivery information, visit our website at www.usps.com®
OFFICIAL
Postage $
Certified Fee
Return Receipt Fee (Endorsement Required)
Restricted Delivery Fee (Endorsement Required)
Total Postage & Fees
$0.00
US POSTAGE
12/13/2022
062S12395454
87113
000024302
7014 2870 0001 4722 9866
Sent To
Street & Apt. No., or PO Box No.
City, State, ZIP+4
Reymundo & Victoria Pina
P.O. Box 356
Loving, NM 88256
PS Form 3800,


U.S. Postal Service™
CERTIFIED MAIL® RECEIPT
Domestic Mail Only
For delivery information, visit our website
OFFICIAL
Postage $
Certified Fee
Return Receipt Fee (Endorsement Required)
Restricted Delivery Fee (Endorsement Required)
Total Postage & Fees
$0.00
US POSTAGE
12/13/2022
062S12395454
87113
000024318
7014 2870 0001 4718 5629
Sent To
Street & Apt. No., or PO Box No.
City, State, ZIP+4
Parker & Whitney Ballard
P.O. Box 716
Loving, NM 88256
PS Form 3800,

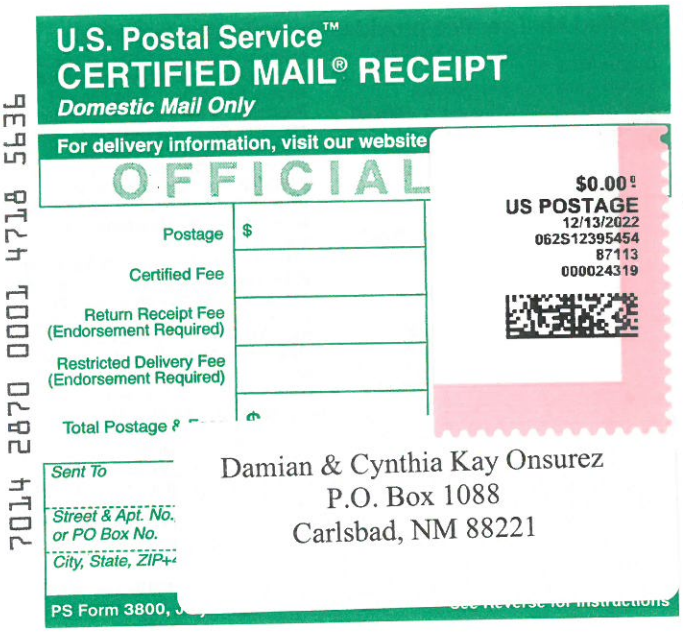
U.S. Postal Service™
CERTIFIED MAIL® RECEIPT
Domestic Mail Only
For delivery information, visit our website
OFFICIAL
Postage $
Certified Fee
Return Receipt Fee (Endorsement Required)
Restricted Delivery Fee (Endorsement Required)
Total Postage & Fees
$0.00
US POSTAGE
12/13/2022
062S12395454
87113
000024319
7014 2870 0001 4718 5636
Sent To
Street & Apt. No., or PO Box No.
City, State, ZIP+4
Damian & Cynthia Kay Onsurez
P.O. Box 1088
Carlsbad, NM 88221
PS Form 3800,

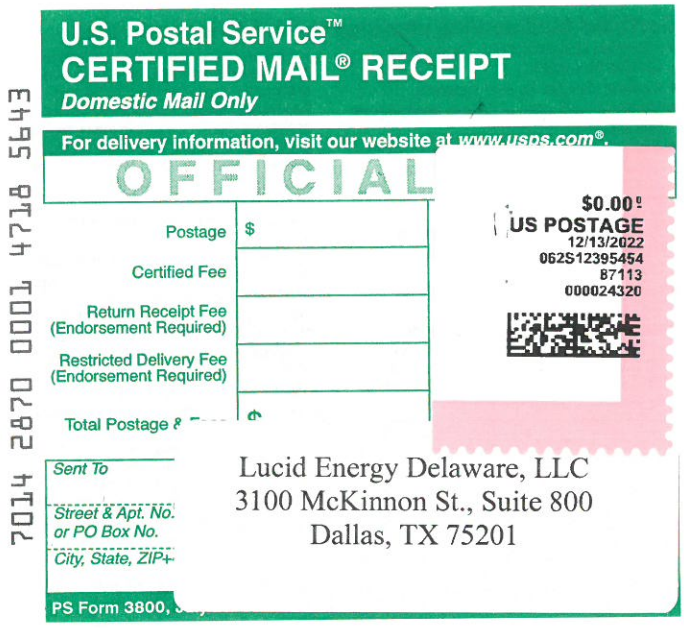
U.S. Postal Service™
CERTIFIED MAIL® RECEIPT
Domestic Mail Only
For delivery information, visit our website at www.usps.com®
OFFICIAL
Postage $
Certified Fee
Return Receipt Fee (Endorsement Required)
Restricted Delivery Fee (Endorsement Required)
Total Postage & Fees
$0.00
US POSTAGE
12/13/2022
062S12395454
87113
000024320
7014 2870 0001 4718 5643
Sent To
Street & Apt. No., or PO Box No.
City, State, ZIP+4
Lucid Energy Delaware, LLC
3100 McKinnon St., Suite 800
Dallas, TX 75201
PS Form 3800,

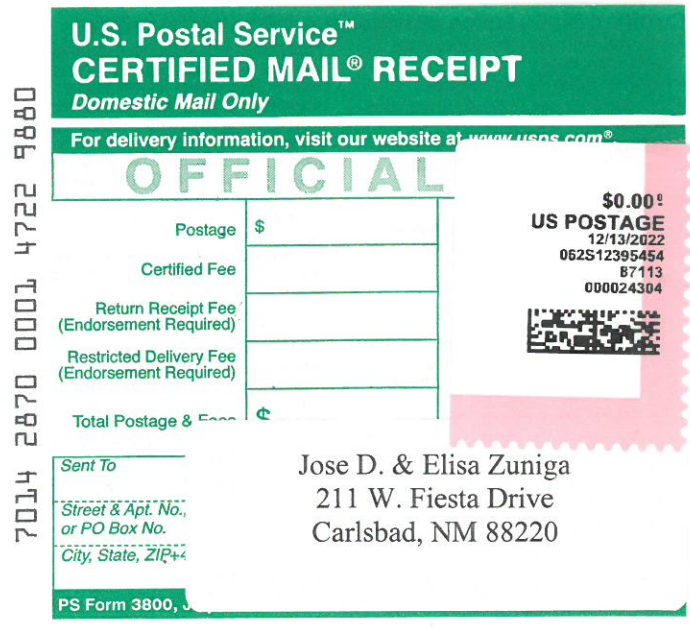
U.S. Postal Service™
CERTIFIED MAIL® RECEIPT
Domestic Mail Only
For delivery information, visit our website at www.usps.com®
OFFICIAL
Postage $
Certified Fee
Return Receipt Fee (Endorsement Required)
Restricted Delivery Fee (Endorsement Required)
Total Postage & Fees
$0.00
US POSTAGE
12/13/2022
062S12395454
87113
000024304
7014 2870 0001 4722 9880
Sent To
Street & Apt. No., or PO Box No.
City, State, ZIP+4
Jose D. & Elisa Zuniga
211 W. Fiesta Drive
Carlsbad, NM 88220
PS Form 3800,


U.S. Postal Service™
CERTIFIED MAIL® RECEIPT
Domestic Mail Only
For delivery information, visit our website at www.usps.com®
OFFICIAL
Postage $
Certified Fee
Return Receipt Fee (Endorsement Required)
Restricted Delivery Fee (Endorsement Required)
Total Postage & Fees
$0.00
US POSTAGE
12/13/2022
062S12395454
87113
000024321
7014 2870 0001 4718 5650
Sent To
Street & Apt. No., or PO Box No.
City, State, ZIP+4
Longwood Midstream Delaware, LLC
5400 LBJ Freeway, Suite 1500
Dallas, TX 75240
PS Form 3800,


U.S. Postal Service™
CERTIFIED MAIL® RECEIPT
Domestic Mail Only
For delivery information, visit our website at www.usps.com®
OFFICIAL
Postage
Certified Fee
Return Receipt Fee (Endorsement Required)
Restricted Delivery Fee (Endorsement Required)
Total Postage & Fees
$0.00
US POSTAGE
12/13/2022
062S12395454
87113
000024301
7014 2870 0001 4722 9859
Sent To
Street & Apt. No.
or PO Box No.
City, State, ZIP+
Pardue Limited Company
P.O. Box 2018
Carlsbad, NM 88221
PS Form 3800,


U.S. Postal Service™
CERTIFIED MAIL® RECEIPT
Domestic Mail Only
For delivery information, visit our website
OFFICIAL
Postage
Certified Fee
Return Receipt Fee (Endorsement Required)
Restricted Delivery Fee (Endorsement Required)
Total Postage &
$0.00
US POSTAGE
12/13/2022
062S12395454
87113
000024299
7014 2870 0001 4722 9835
Sent To
Street & Apt. No.,
or PO Box No.
City, State, ZIP+4
Felix & Deborah Calderon
P.O. Box 64
Loving, NM 88256
PS Form 3800, July 2014


U.S. Postal Service™
CERTIFIED MAIL® RECEIPT
Domestic Mail Only
For delivery information, visit our website
OFFICIAL
Postage
Certified Fee
Return Receipt Fee (Endorsement Required)
Restricted Delivery Fee (Endorsement Required)
Total Postage & Fees
$0.00
US POSTAGE
12/13/2022
062S12395454
87113
000024300
7014 2870 0001 4722 9842
Sent To
Street & Apt. No.
or PO Box No.
City, State, ZIP+
Vickie Connally
125 Brinkley Lane
Elgrin, TX 78621
PS Form 3800,

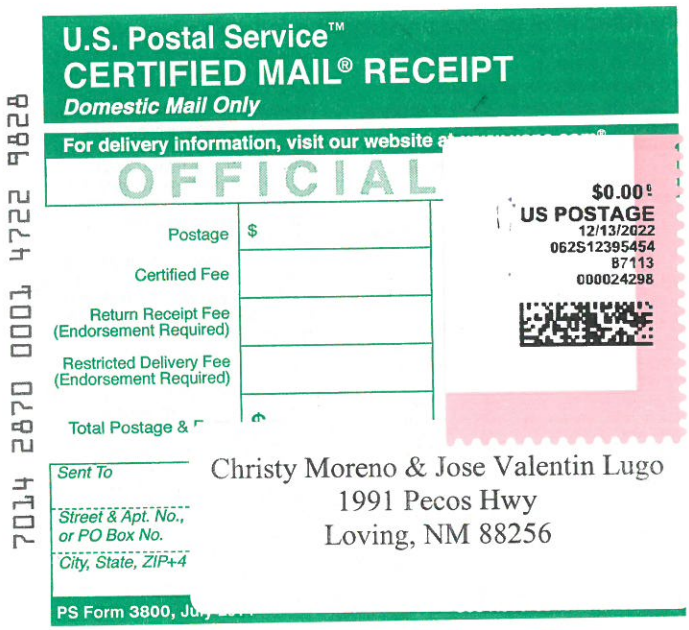
U.S. Postal Service™
CERTIFIED MAIL® RECEIPT
Domestic Mail Only
For delivery information, visit our website
OFFICIAL
Postage
Certified Fee
Return Receipt Fee (Endorsement Required)
Restricted Delivery Fee (Endorsement Required)
Total Postage &
$0.00
US POSTAGE
12/13/2022
062S12395454
87113
000024298
7014 2870 0001 4722 9828
Sent To
Street & Apt. No.,
or PO Box No.
City, State, ZIP+4
Christy Moreno & Jose Valentin Lugo
1991 Pecos Hwy
Loving, NM 88256
PS Form 3800,

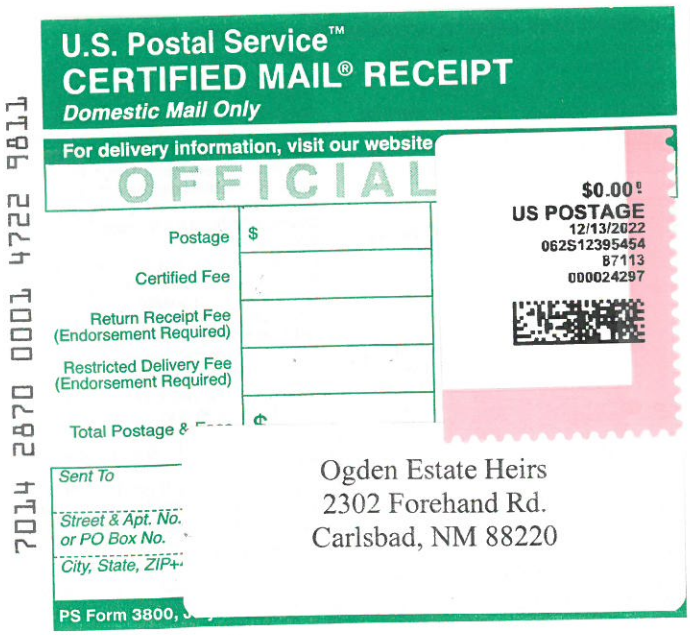
U.S. Postal Service™
CERTIFIED MAIL® RECEIPT
Domestic Mail Only
For delivery information, visit our website
OFFICIAL
Postage
Certified Fee
Return Receipt Fee (Endorsement Required)
Restricted Delivery Fee (Endorsement Required)
Total Postage &
$0.00
US POSTAGE
12/13/2022
062S12395454
87113
000024297
7014 2870 0001 4722 9811
Sent To
Street & Apt. No.
or PO Box No.
City, State, ZIP+
Ogden Estate Heirs
2302 Forehand Rd.
Carlsbad, NM 88220
PS Form 3800,

7014 2870 0001 4722 9873

U.S. Postal Service™
CERTIFIED MAIL® RECEIPT
Domestic Mail Only

For delivery information, visit our website

OFFICIAL

Postage	$
Certified Fee	
Return Receipt Fee (Endorsement Required)	
Restricted Delivery Fee (Endorsement Required)	
Total Postage & Fees	¢

$0.00
US POSTAGE
12/13/2022
062S12395454
87113
000024303

Sent To
Street & Apt. No. or PO Box No.
City, State, ZIP+

Village of Loving, NM
P.O. Box 56
Loving, NM 88256

PS Form 3800,

7014 2870 0001 4722 9903

U.S. Postal Service™
CERTIFIED MAIL® RECEIPT
Domestic Mail Only

For delivery information, visit our website a

OFFICIAL

Postage	$
Certified Fee	
Return Receipt Fee (Endorsement Required)	
Restricted Delivery Fee (Endorsement Required)	
Total Postage & Fees	¢

$0.00
US POSTAGE
12/13/2022
062S12395454
87113
000024306

Sent To
Street & Apt. No. or PO Box No.
City, State, ZIP+

Eddy County Manager
101 W. Greene St. Suite 110
Carlsbad, NM 88220

PS Form 3800,

CERTIFIED MAIL XXXX XXXX XXXX XXXX
RETURN RECEIPT REQUESTED *(certified mail is required,* ***return receipt is optional****)*

Dear **[Neighbor/Environmental Director/county or municipal official]**
Targa Northern Delaware, LLC announces its application submittal to the New Mexico Environment Department for an air quality permit for the **modification** of its **Road Runner Gas Processing Plant** facility. The expected date of application submittal to the Air Quality Bureau is **Tuesday, December 13, 2022.**

The exact location for the proposed facility known as, **Road Runner Gas Processing Plant**, is at latitude **32** deg**, 15** min, **56.71** sec and longitude **-104** deg**, 6** min, **29.97** sec. The approximate location of this facility is **1.7** miles south-west of Loving in Eddy County, New Mexico.

The proposed **modification** consists of updating NSR Permit 7200-M3 based on the most current plans, updating representations, and removing one proposed processing train from the permit. The estimated maximum quantities of any regulated air contaminant will be as follows in pound per hour (pph) and tons per year (tpy) and could change slightly during the course of the Department's review:

Pollutant:	Pounds per hour	Tons per year
Particulate Matter (PM)	5 pph	19 tpy
PM_{10}	5 pph	18 tpy
$PM_{2.5}$	5 pph	17 tpy
Sulfur Dioxide (SO_2)	2,764 pph	163 tpy
Nitrogen Oxides (NO_x)	5,241 pph	172 tpy
Carbon Monoxide (CO)	10,443 pph	249 tpy
Volatile Organic Compounds (VOC) (with fugitives)	8,952 pph	328 tpy
Volatile Organic Compounds (VOC) (without fugitives)	8,923 pph	201 tpy
Total sum of all Hazardous Air Pollutants (HAPs)	455 pph	24.9 tpy
Toxic Air Pollutant (TAP)	n/a pph	n/a tpy
Green House Gas Emissions as Total CO_2e	n/a	467,511 tpy

The standard and maximum operating schedules of the facility will be 24 hours a day, 7 days a week and a maximum of 52 weeks per year.
The owner and/or operator of the Facility is: **Targa Northern Delaware, LLC; 6 Desta Drive, Suite 3300, Midland, TX 79705**

If you have any comments about the construction or operation of this facility, and you want your comments to be made as part of the permit review process, you must submit your comments in writing to this address: Permit Programs Manager; New Mexico Environment Department; Air Quality Bureau; 525 Camino de los Marquez, Suite 1; Santa Fe, New Mexico; 87505-1816. Other comments and questions may be submitted verbally. (505) 476-4300; 1 800 224-7009.

Please refer to the company name and facility name, or send a copy of this notice along with your comments, since the Department may have not yet received the permit application. Please include a legible return mailing address with your comments. Once the Department has performed a preliminary review of the application and its air quality impacts, the Department's notice will be published in the legal section of a newspaper circulated near the facility location.
Attención
Este es un aviso de la oficina de Calidad del Aire del Departamento del Medio Ambiente de Nuevo México, acerca de las emisiones producidas por un establecimiento en esta área. Si usted desea información en español, por favor comuníquese con esa oficina al teléfono 505-372-8373.

Sincerely,
Targa Northern Delaware, LLC
6 Desta Drive, Suite 3300, Midland, TX 79705

Notice of Non-Discrimination
NMED does not discriminate on the basis of race, color, national origin, disability, age or sex in the administration of its programs or activities, as required by applicable laws and regulations. NMED is responsible for coordination of compliance efforts and receipt of inquiries concerning non-discrimination requirements implemented by 40 C.F.R. Part 7, including Title VI of the Civil Rights Act of 1964, as amended; Section 504 of the Rehabilitation Act of 1973; the Age Discrimination Act of 1975, Title IX of the Education Amendments of 1972, and Section 13 of the Federal Water Pollution Control Act Amendments of 1972. If you have any questions about this notice or any of NMED's non-discrimination programs, policies or procedures, or if you believe that you have been discriminated against with respect to a NMED program or activity, you may contact: Kathryn Becker, Non-Discrimination Coordinator, NMED, 1190 St. Francis Dr., Suite N4050, P.O. Box 5469, Santa Fe, NM 87502, (505) 827-2855, nd.coordinator@state.nm.us. You may also visit our website at https://www.env.nm.gov/non-employee-discrimination-complaint-page/ to learn how and where to file a complaint of discrimination.

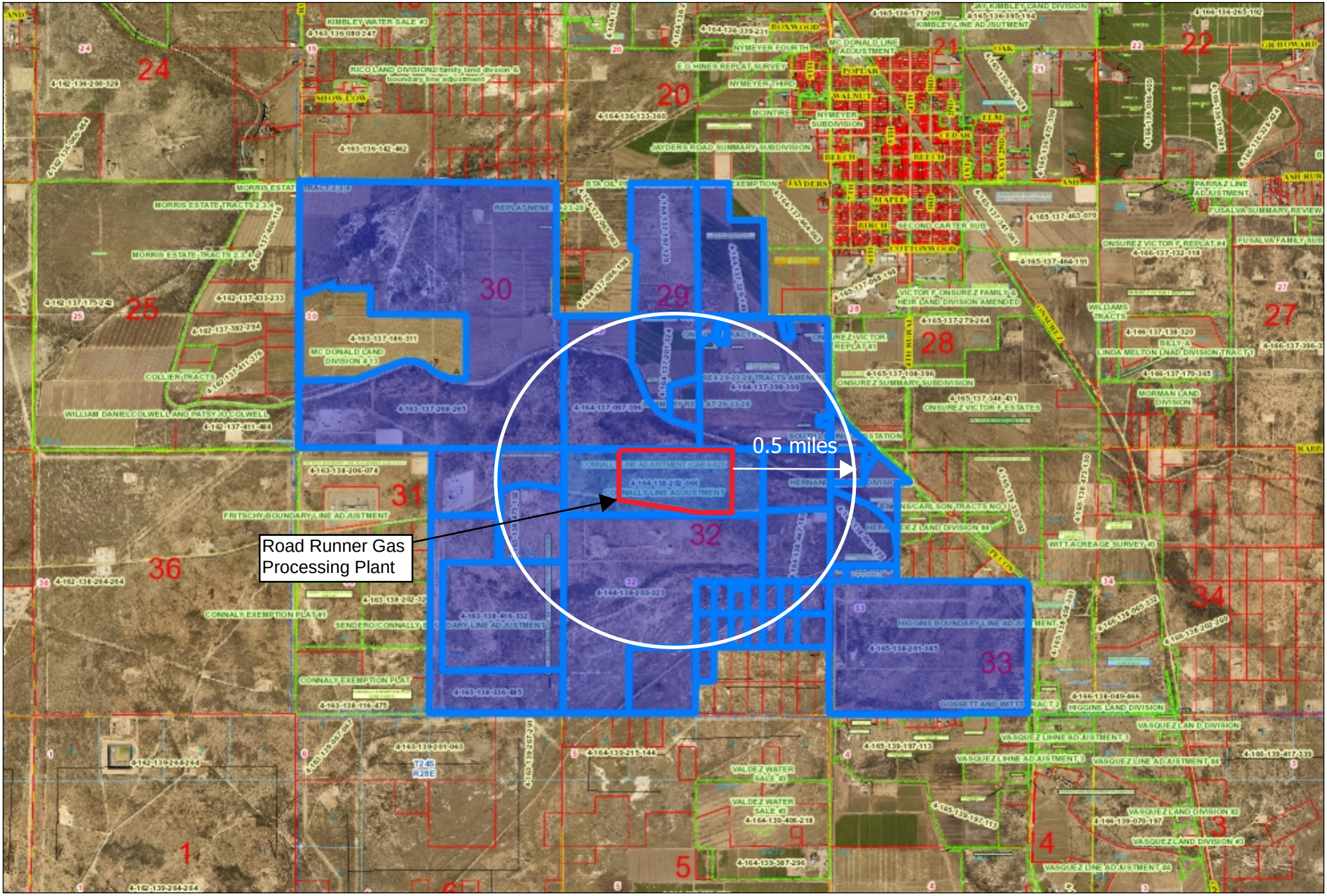

Road Runner GP Surrounding Properties

Web Print: 11/11/2022

0 3,009 6,019 Feet

This map is a user generated static output from an Internet mapping site and is for reference only. Data layers that appear on this map may or may not be accurate, current, or otherwise reliable.

©2022 Sidwell. All rights reserved.

Targa Midstream Services LLC - Road Runner Gas Plant Public Notice List:

Name	Mailing Address	Category of Notice
LUCID ENERGY DELAWARE LLC	3100 MCKINNON ST STE 800, DALLAS, TX 75201-7014	Nearby Landowner
MCDONALD, HENRY	PO BOX 597, LOVING, NM 88256-0597	Nearby Landowner
CONNALLY, VICKIE	125 BRINKLEY LN, ELGIN, TX 78621-5046	Nearby Landowner
STATE OF NEW MEXICO	310 OLD SANTA FE TRAIL, SANTA FE, NM 87504	Nearby Landowner
OGDEN ESTATE HEIRS	2302 FOREHAND RD, CARLSBAD, NM 88220	Nearby Landowner
ZUNIGA, RYAN M	24 MESQUITE LANE, ARTESIA, NM 88210	Nearby Landowner
SOOBY, F W MRS	921 MONTCREST DR, REDDING, CA 96003	Nearby Landowner
HUFFER, GEORGE A	4713 CRAIG AVE, METAIRIE, LA 70003	Nearby Landowner
COX, NELDA WYRICK ETAL (JT)	3101 SEXTON DR, NORMAN, OK 73026	Nearby Landowner
BLACKMON, SUSAN D & BLACKMON, JOHN E	3501 BONNIEBROOK DR, PLANO, TX 75075	Nearby Landowner
SOUTHWESTERN PUBLIC SERVICE CO	ATTN: PROPERTY TAX DEPT, PO BOX 1979, DENVER, CO 80201-0840	Nearby Landowner
ESCARCEGA, JOSE VALENTIN LUGO & LUGO, CHRISTY MORENO (JT)	1991 PECOS HWY, LOVING, NM 88256	Nearby Landowner
HERNANDEZ, PABLO & MARIA REV TRUST HERNANDEZ, PABLO P & MARIA Q TRUSTEES	1971 PECOS HWY , LOVING, NM 88256	Nearby Landowner
BALLARD, PARKER & WHITNEY (N-JT)	PO BOX 716, LOVING, NM 882560716	Nearby Landowner
BALLARD, MITCHELL & WENDY	273 HIGBY HOLE RD, LOVING, NM 88256-9737	Nearby Landowner
PARDUE LIMITED COMPANY	PO BOX 2018, CARLSBAD, NM 88221-2018	Nearby Landowner
ONSUREZ, ANTONIO C & GLORIA S	PO BOX 598, LOVING, NM 88256-0598	Nearby Landowner
ONSUREZ, DAMIAN S & CYNTHIA KAY (JT)	PO BOX 1088, CARLSBAD, NM 88221-1088	Nearby Landowner
PINA, REYMUNDO & VICTORIA (JT)	PO BOX 356, LOVING, NM 88256-0356	Nearby Landowner
ONSUREZ, JOEL SANTOS	PO BOX 1058, LOVING, NM 88256-1058	Nearby Landowner
CALDERON, FELIX & DEBRA (JT)	PO BOX 64, LOVING, NM 88256-0064	Nearby Landowner
ZUNIGA, JOSE D & ELISA (N-JT)	211 W FIESTA DR , CARLSBAD, NM 88220	Nearby Landowner
MCDONALD, HENRY	PO BOX 597, LOVING, NM 88256-0597	Nearby Landowner
LONGWOOD MIDSTREAM DELAWARE LLC	5400 LBJ FREEWAY SUITE 1500, DALLAS, TX 75240	Nearby Landowner
CONNALLY, VICKIE	125 BRINKLEY LN , ELGIN, TX 78621-5046	Nearby Landowner
Eddy County Manager	101 W Greene Street, Suite 110, Carlsbad, NM 88220	County and Nearby Landowner
Village of Loving, NM	P.O. Box 56, Loving, NM 88256	Municipality and Nearby Landowner

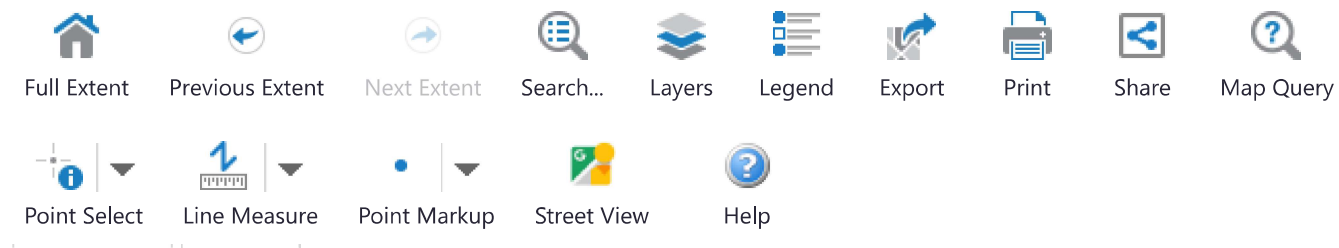

UPC
4-164-138-202-066

Map Number
320-CLA-A , CAB# 6-623-1,

Owner
LUCID ENERGY DELAWARE LLC

Owner Address1
3100 MCKINNON ST STE 800

Owner Address2
N/A

Owner Address City
DALLAS

Owner Address State
TX

Owner Address Zip Code
752017014

Site Address
E OF 1011 BOUNDS ROAD

Legal Description
Subd: CONNALLY LINE ADJUSTMENT Tract: A THIS TRACT IS IN TWO DIFFERENT SEC'S AND HAS TO BE SOLD TOGETHER SEE 4-163-138-471-039 Quarter: NE S: 31 T: 23S R: 28E

Model Type
Land

Land Acreage
220

Actual Area
122

Tax Area
CO_NR

Land Code
122_1_8

Book
N/A

Page
N/A

Section 10

Written Description of the Routine Operations of the Facility

---

A written description of the routine operations of the facility. Include a description of how each piece of equipment will be operated, how controls will be used, and the fate of both the products and waste generated. For modifications and/or revisions, explain how the changes will affect the existing process. In a separate paragraph describe the major process bottlenecks that limit production. The purpose of this description is to provide sufficient information about plant operations for the permit writer to determine appropriate emission sources.

The Roadunner Gas Processing Plant is a natural gas processing plant located in Eddy County near Loving, NM. The primary function of the plant is to separate natural gas (methane) from heavier (liquid) hydrocarbons, raw sweet field gas so that the gas can meet pipeline specifications. The plant has been designated a primary Standard Industrial Classification (SIC) Code of 1311.

The operation of the Roadrunner Gas Processing Plant is intended to process 660 MMscfd of gas. The gas will be treated to remove CO_2 and H_2S, dehydrated to remove water, and processed to remove heavy (liquid) hydrocarbons from the gas stream. Several plant systems will be involved to perform these functions.

Slug Catcher / Separator

A large slug catcher has been placed at the front of the plant to catch and separate any free hydrocarbon liquids and water present in the inlet pipeline gas stream. It is capable of handling large slugs of liquid brought into the plant from pipeline pigging operations. The equipment also serves as a three-phase separator to separate the free hydrocarbons, gas to be processed, and any water that may have condensed out in the pipeline after field dehydration.

Stabilizers

The overhead stabilization system is in place to lower the Reid Vapor Pressure (RVP) of the pipeline liquids and condensate after they are dropped out of the gas stream. Through a process that heats the condensate to flash off lighter hydrocarbons so the RVP is lowered to 9. The liquids out of the slug catcher are stabilized and sent to the tank farm for truck sales. Any remaining vapors are recycled back to the front of the Slug Catcher. The liquid in the tank farm is then stable and thus does not give off significant flashing vapors. Significant working and standing losses will occur at the tank farm. These emissions will be controlled with a vapor combustor.

Amine Treating

The amine units are designed to remove CO_2 and H_2S (from the natural gas stream) to meet pipeline specifications. Streams containing up to 5 ppm H2S will be processed at the plant. Amine treating is an exothermic chemical reaction process. The treating solution is a mixture of 50% RO water, 40% methyl-diethanolamine (MDEA) and 10% Piperazine. This aqueous mixture is regenerated and reused. Lean MDEA solution is pumped to the top of the contactor and allowed to flow downward. Wet gas is fed into the bottom of the contactor and flows upward.

As the lean MDEA solution flows down through the contactor, it comes into contact with the wet gas. The CO_2 and H_2S are absorbed by amine. The amine is now known as rich amine and the remaining gas is sweet and continues to the dehydration systems.

The regeneration of the amine utilizes one 70.28 MMBtu/hr heater (EP-3A) and one 84.77 MMBtu/hr heater (EP-3B). Significant amounts of VOC and HAP can be generated in this process. The acid gas is sent to a thermal oxidizer where additional combustion will further minimize VOC and H2S emissions.

Glycol Dehydration

Triethylene glycol (TEG) is used to remove water from the natural gas stream. Water is saturated into the sweet gas stream during the Amine Treating process. This water is absorbed by the TEG solution. The wet gas is brought into contact with dry glycol in an absorber. Water vapor is absorbed in the glycol and consequently, the water content is reduced. The wet rich glycol then flows

from the absorber to a regeneration system in which the entrained gas is separated and fractionated in a column and re-boiler. The heating allows boiling off the absorbed water vapor and the water dry lean glycol is cooled (via heat exchange) and pumped back to the absorber.

The regeneration of the TEG utilizes small (less than 10 MMBtu/hr) heaters. This process produces VOC and HAP emission. This stream is condensed. The wastewater stream is sent to a wastewater tank. The non-condensable stream is sent to the thermal oxidizer for control where further combustion reduces the emissions. The dehydration flash gas stream us used as plant fuel.

Molecular Sieve Dehydration

Molecular sieve dehydration is used upstream of the cryogenic processes to achieve a -160°F water dew point. The process uses three molecular sieve vessels with two vessels in service adsorbing moisture from the gas stream and the other vessel in the regeneration mode.

During the regeneration mode, hot, dry gas (regen gas) is passed up through the vessel to drive off the adsorbed moisture from the molecular sieve. The gas comes from the discharge of the residue compressors and it is passed through a heat exchanger and a heater to achieve a temperature of approximately 500°F. After the gas passes through the bed it is cooled in an air cooled exchanger. The water in the gas condenses and is separated from the gas stream in a separator. The regen gas is routed to the inlet of the cryogenic unit.

Cryogenic Unit (3)

The cryogenic units are designed to liquefy natural gas components from the sweet, dehydrated inlet gas by removing work from the gas be means of the turbo expander/compressor. The cryogenic unit recovers natural gas liquids (NGL) by cooling the gas stream to extremely cold temperatures (-160°F and lower) and condensing components such as ethane, propane, butanes and heavier. The gas is cooled by a series of heat exchangers and by lowering the pressure of the gas from around 950 PSIG to approximately 190 PSIG. Once the gas has passed through the system of heat exchangers and expansion it is re-compressed using the energy obtained from expanding the gas.

The gas will flow through the following heat exchangers:

- **Gas to Gas Exchanger –** This unit exchanges heat from the warm inlet gas and the cold residue gas that has already been expanded. This cools the inlet gas.
- **Product Heater –** This unit will cool the inlet gas by exchanging heat with the cold liquid product that has been recovered.
- **Side-Reboiler –** This unit uses heat from the inlet gas to boil the methane out of the liquid. One stream comes off the side of the tower and one stream comes off of the bottom of the tower. This also cools the inlet gas.

The gas is expanded and recompressed in the expander/compressor.

Emergency Flares

Three flares are proposed. These flares' header system gathers hydrocarbons from Pressure Safety Devices in the plant, and routes them to the flares. These systems are also used to safely control blow-down hydrocarbons from equipment in the plant.

Compressors

The site will operate a total of 23 electric-driven compressors. No internal combustion engines or turbines will be used to drive compressors.

Section 11
Source Determination

Source submitting under 20.2.70, 20.2.72, 20.2.73, and 20.2.74 NMAC

Sources applying for a construction permit, PSD permit, or operating permit shall evaluate surrounding and/or associated sources (including those sources directly connected to this source for business reasons) and complete this section. Responses to the following questions shall be consistent with the Air Quality Bureau's permitting guidance, Single Source Determination Guidance, which may be found on the Applications Page in the Permitting Section of the Air Quality Bureau website.

Typically, buildings, structures, installations, or facilities that have the same SIC code, that are under common ownership or control, and that are contiguous or adjacent constitute a single stationary source for 20.2.70, 20.2.72, 20.2.73, and 20.2.74 NMAC applicability purposes. Submission of your analysis of these factors in support of the responses below is optional, unless requested by NMED.

A. A. Identify the emission sources evaluated in this section (list and describe)**:**
Roadrunner Gas Plant by itself is the source represented in this application. There are no nearby or adjacent sources.

B. Apply the 3 criteria for determining a single source:

SIC Code: Surrounding or associated sources belong to the same 2-digit industrial grouping (2-digit SIC code) as this facility, OR surrounding or associated sources that belong to different 2-digit SIC codes are support facilities for this source.

☑ **Yes** ☐ **No**

Common Ownership or Control: Surrounding or associated sources are under common ownership or control as this source.

☑ **Yes** ☐ **No**

Contiguous or Adjacent: Surrounding or associated sources are contiguous or adjacent with this source.

☑ **Yes** ☐ **No**

C. Make a determination:

☑ The source, as described in this application, constitutes the entire source for 20.2.70, 20.2.72, 20.2.73, or 20.2.74 NMAC applicability purposes. If in "A" above you evaluated only the source that is the subject of this application, all "**YES**" boxes should be checked. If in "A" above you evaluated other sources as well, you must check **AT LEAST ONE** of the boxes "**NO**" to conclude that the source, as described in the application, is the entire source for 20.2.70, 20.2.72, 20.2.73, and 20.2.74 NMAC applicability purposes.

☐ The source, as described in this application, **does not** constitute the entire source for 20.2.70, 20.2.72, 20.2.73, or 20.2.74 NMAC applicability purposes (A permit may be issued for a portion of a source). The entire source consists of the following facilities or emissions sources (list and describe):

Section 12

Section 12.A
PSD Applicability Determination for All Sources

(Submitting under 20.2.72, 20.2.74 NMAC)

A PSD applicability determination for all sources. For sources applying for a significant permit revision, apply the applicable requirements of 20.2.74.AG and 20.2.74.200 NMAC and to determine whether this facility is a major or minor PSD source, and whether this modification is a major or a minor PSD modification. It may be helpful to refer to the procedures for Determining the Net Emissions Change at a Source as specified by Table A-5 (Page A.45) of the EPA New Source Review Workshop Manual to determine if the revision is subject to PSD review.

A. This facility is:

- ☑ **a minor PSD source before and after this modification (if so, delete C and D below).**
- ☐ **a major PSD source before this modification. This modification will make this a PSD minor source.**
- ☐ **an existing PSD Major Source that has never had a major modification requiring a BACT analysis.**
- ☐ **an existing PSD Major Source that has had a major modification requiring a BACT analysis**
- ☐ **a new PSD Major Source after this modification.**

B. **This facility is not one of the listed 20.2.74.501 Table I – PSD Source Categories. The "project" emissions** for this modification are **not significant. Project emission increases are less than 250 tpy for all criteria pollutants. The "project" emissions listed below do only result from changes described in this permit application, thus no emissions from other revisions or modifications, past or future to this facility. Also, specifically discuss whether this project results in "de-bottlenecking", or other associated emissions resulting in higher emissions. Debottlenecked emissions are not accounted for since the source is an existing minor NSR site. The project emissions (before netting) for this project are as follows [see Table 2 in 20.2.74.502 NMAC for a complete list of significance levels]:**

a. **NOx: 155.90 TPY**
b. **CO: 231.39 TPY**
c. **VOC: 297.30 TPY**
d. **VOC (without fugitives): 181.82 TPY**
e. **SOx: 147.88 TPY**
f. **PM: 16.81 TPY**
g. **PM10: 15.72 TPY**
h. **PM2.5: 15.39 TPY**
i. **Fluorides: N/A TPY**
j. **Lead: N/A TPY**
k. **Sulfur compounds (listed in Table 2): 0.54 TPY**
l. **GHG: 416,731.67 TPY**

C. **Netting NA**

D. **BACT** NA

E. If this is an existing PSD major source, or any facility with emissions greater than 250 TPY (or 100 TPY for 20.2.74.501 Table 1 – PSD Source Categories), determine whether any permit modifications are related, or could be considered a single project with this action, and provide an explanation for your determination whether a PSD modification is triggered. NA

Section 13

Determination of State & Federal Air Quality Regulations

This section lists each state and federal air quality regulation that may apply to your facility and/or equipment that are stationary sources of regulated air pollutants.

Not all state and federal air quality regulations are included in this list. Go to the Code of Federal Regulations (CFR) or to the Air Quality Bureau's regulation page to see the full set of air quality regulations.

Required Information for Specific Equipment:
For regulations that apply to specific source types, in the 'Justification' column **provide any information needed to determine if the regulation does or does not apply**. **For example**, to determine if emissions standards at 40 CFR 60, Subpart IIII apply to your three identical stationary engines, we need to know the construction date as defined in that regulation; the manufacturer date; the date of reconstruction or modification, if any; if they are or are not fire pump engines; if they are or are not emergency engines as defined in that regulation; their site ratings; and the cylinder displacement.

Required Information for Regulations that Apply to the Entire Facility:
See instructions in the 'Justification' column for the information that is needed to determine if an 'Entire Facility' type of regulation applies (e.g. 20.2.70 or 20.2.73 NMAC).

Regulatory Citations for Regulations That Do Not, but Could Apply:
If there is a state or federal air quality regulation that does not apply, but you have a piece of equipment in a source category for which a regulation has been promulgated, you must **provide the low level regulatory citation showing why your piece of equipment is not subject to or exempt from the regulation. For example** if you have a stationary internal combustion engine that is not subject to 40 CFR 63, Subpart ZZZZ because it is an existing 2 stroke lean burn stationary RICE with a site rating of more than 500 brake HP located at a major source of HAP emissions, your citation would be 40 CFR 63.6590(b)(3)(i). **We don't want a discussion of every non-applicable regulation, but if it is possible a regulation could apply, explain why it does not. For example,** if your facility is a power plant, you do not need to include a citation to show that 40 CFR 60, Subpart OOO does not apply to your non-existent rock crusher.

Regulatory Citations for Emission Standards:
For each unit that is subject to an emission standard in a source specific regulation, such as 40 CFR 60, Subpart OOO or 40 CFR 63, Subpart HH, include the low level regulatory citation of that emission standard. Emission standards can be numerical emission limits, work practice standards, or other requirements such as maintenance. **Here are examples:** a glycol dehydrator is subject to the general standards at 63.764C(1)(i) through (iii); an engine is subject to 63.6601, Tables 2a and 2b; a crusher is subject to 60.672(b), Table 3 and all transfer points are subject to 60.672(e)(1)

Federally Enforceable Conditions:
All federal regulations are federally enforceable. All Air Quality Bureau State regulations are federally enforceable except for the following: affirmative defense portions at 20.2.7.6.B, 20.2.7.110(B)(15), 20.2.7.11 through 20.2.7.113, 20.2.7.115, and 20.2.7.116; 20.2.37; 20.2.42; 20.2.43; 20.2.62; 20.2.63; 20.2.86; 20.2.89; and 20.2.90 NMAC. Federally enforceable means that EPA can enforce the regulation as well as the Air Quality Bureau and federally enforceable regulations can count toward determining a facility's potential to emit (PTE) for the Title V, PSD, and nonattainment permit regulations.

INCLUDE ANY OTHER INFORMATION NEEDED TO COMPLETE AN APPLICABILITY DETERMINATION OR THAT IS RELEVENT TO YOUR FACILITY'S NOTICE OF INTENT OR PERMIT.

EPA Applicability Determination Index for 40 CFR 60, 61, 63, etc: http://cfpub.epa.gov/adi/

Table for State Regulations:

State Regulation Citation	Title	Applies? Enter Yes or No	Unit(s) or Facility	Justification: (You may delete instructions or statements that do not apply in the justification column to shorten the document.)
20.2.1 NMAC	General Provisions	Yes	Facility	General Provisions apply to Notice of Intent, Construction, and Title V permit applications.
20.2.3 NMAC	Ambient Air Quality Standards NMAAQS	Yes	Facility	If subject, this would normally apply to the entire facility. 20.2.3 NMAC is a State Implementation Plan (SIP) approved regulation that limits the maximum allowable concentration of, Sulfur Compounds, Carbon Monoxide and Nitrogen Dioxide. Title V applications, see exemption at 20.2.3.9 NMAC The TSP NM ambient air quality standard was repealed by the EIB effective November 30, 2018.
20.2.7 NMAC	Excess Emissions	Yes	Facility	If subject, this would normally apply to the entire facility. If your entire facility or individual pieces of equipment are subject to emissions limits in a permit or numerical emissions standards in a federal or state regulation, this applies. This would not apply to Notices of Intent since these are not permits.
20.2.23 NMAC	Fugitive Dust Control	No	N/A	Sources exempt from 20.2.23 NMAC are activities and facilities subject to a permit issued pursuant to the NM Air Quality Control Act, the Mining Act, or the Surface Mining Act (20.2.23.108.B NMAC.
20.2.33 NMAC	Gas Burning Equipment - Nitrogen Dioxide	No	N/A	The site does not have gas burning equipment larger than 1,000,000 MM Btu/year.
20.2.34 NMAC	Oil Burning Equipment: NO_2	No	N/A	The site does not have oil burning equipment larger than 1,000,000 MM Btu/year.
20.2.35 NMAC	Natural Gas Processing Plant – Sulfur	Yes	Facility	This regulation establishes sulfur emission standards for natural gas processing plants. The proposed facility meets the definition of a new natural gas processing plant under this regulation and is subject to the requirements of this regulation [20.2.35.7 (B) NMAC]. The facility will comply with all requirements under 20.2.35 NMAC as applicable.
20.2.37 and 20.2.36 NMAC	Petroleum Processing Facilities and Petroleum Refineries	N/A	N/A	**These regulations were repealed by the Environmental Improvement Board. If you had equipment subject to 20.2.37 NMAC before the repeal, your combustion emission sources are now subject to 20.2.61 NMAC.**
20.2.38 NMAC	Hydrocarbon Storage Facility	No	N/A	Site does not have tank sizes that meet the applicability criteria.
20.2.39 NMAC	Sulfur Recovery Plant - Sulfur	No	N/A	The site is a natural gas processing facility. As such, this regulation does not apply.
20.2.50 NMAC	Oil and Gas Sector – Ozone Precursor Pollutants	Yes	Facility	The site is a natural gas processing facility in Eddy County, NM. Parts of the site commenced operation prior to the effective date of this Part and will therefore comply with provisions for Existing units. The proposed equipment will be treated as New units for the rule. Targa will comply with all applicable elements of this Part.

20.2.61.109 NMAC	Smoke & Visible Emissions	Yes	EP-1; 2-EP-1; 3-EP-1; EP-2; 2-EP-2; 3-EP2; EP-3A; EP-3B; EP-4; 2-EP-4; 3-EP-4; EP-5; 2-EP-5; 3-EP-5; EP-6; 2-EP-6; EP-9; COMB-1	This regulation that limits opacity to 20% applies to Stationary Combustion Equipment, such as engines, boilers, heaters, and flares unless your equipment is subject to another state regulation that limits particulate matter such as 20.2.19 NMAC (see 20.2.61.109 NMAC).
20.2.70 NMAC	Operating Permits	Yes	Facility	Title V major for criteria pollutants. Targa will submit an initial Title V Operating Permit application.
20.2.71 NMAC	Operating Permit Fees	Yes	Facility	If subject to 20.2.70 NMAC and your permit includes numerical ton per year emission limits, you are subject to 20.2.71 NMAC and normally applies to the entire facility.
20.2.72 NMAC	Construction Permits	Yes	Facility	This regulation establishes the requirements for obtaining a construction permit. The facility is a stationary source that has a potential emission rate greater than 10 pounds per hour or 25 tons per year of any regulated air contaminant for which there is a National or New Mexico Air Quality Standard. The facility has a construction permit to meet the requirements of this regulation.
20.2.73 NMAC	NOI & Emissions Inventory Requirements	Yes	Facility	**Emissions Inventory Reporting per** 20.2.73.300 NMAC applies to the site. All facilities that are a Title V Major Source as defined at 20.2.70.7.R NMAC are subject to Emissions Inventory Reporting.
20.2.74 NMAC	Permits – Prevention of Significant Deterioration (PSD)	No	N/A	Minor NSR site.
20.2.75 NMAC	Construction Permit Fees	Yes	Facility	This regulation applies since this submittal is an application pursuant to 20.2.72.
20.2.77 NMAC	New Source Performance	Yes	Units subject to 40 CFR 60	This is a stationary source which is subject to the requirements of 40 CFR Part 60.
20.2.78 NMAC	Emission Standards for HAPS	No	N/A	No units at the site are subject to 40 CFR Part 61.
20.2.79 NMAC	Permits – Nonattainment Areas	No	Facility	Site is not located in a nonattainment county.
20.2.80 NMAC	Stack Heights	No	N/A	Not cited in NSR permit. No stacks exceed GEP height.

20.2.82 NMAC	MACT Standards for source categories of HAPS	Yes	Units Subject to 40 CFR 63	The site has equipment that is subject to a MACT Subparts HH.

Table for Applicable Federal Regulations:

Federal Regulation Citation	Title	Applies? Enter Yes or No	Unit(s) or Facility	Justification:
40 CFR 50	NAAQS	Yes	Facility	This applies since the site is subject to 20.2.72 NMAC.
NSPS 40 CFR 60, Subpart A	General Provisions	Yes	Units subject to 40 CFR 60	The site has units subject to an NSPS as shown below.
NSPS 40 CFR60.40a, Subpart Da	Subpart Da, Performance Standards for **Electric Utility Steam Generating Units**	No	N/A	No units are subject to NSPS Subpart Da.
NSPS 40 CFR60.40b Subpart Db	**Electric Utility Steam Generating Units**	No	N/A	No units are subject to NSPS Subpart Db.
40 CFR 60.40c, Subpart Dc	Standards of Performance for Small Industrial-Commercial-Institutional Steam Generating Units	Yes	EP-2; 2-EP-2; 3-EP-2; EP-3A; EP-3B; EP-6; 2-EP-6	This facility has steam generating units for which construction, modification or reconstruction is commenced after June 9, 1989 and that have a maximum design heat input capacity of 29 MW (100 MMBtu/hr) or less, but greater than or equal to 2.9 MW (10 MMBtu/hr). Only recordkeeping and notification requirements apply as the units burn only natural gas.
NSPS 40 CFR 60, Subpart Ka	Standards of Performance for **Storage Vessels for Petroleum Liquids** for which Construction, Reconstruction, or Modification Commenced After May 18, 1978, and **Prior** to July 23, 1984	No	N/A	All hydrocarbon tanks have a storage capacity less than 151,416 liters (40,000 gallons). that are used to store petroleum liquids for which construction is commenced after May 18, 1978.
NSPS 40 CFR 60, Subpart Kb	Standards of Performance for **Volatile Organic Liquid Storage Vessels** (Including Petroleum Liquid Storage Vessels) for Which Construction, Reconstruction, or Modification Commenced **After** July 23, 1984	Yes	T-1; T-2; T-3; T-4; T-5	This facility has storage vessels with a capacity greater than or equal to 75 cubic meters (m^3) that is used to store volatile organic liquids (VOL) for which construction, reconstruction, or modification is commenced after July 23, 1984.

Federal Regulation Citation	Title	Applies? Enter Yes or No	Unit(s) or Facility	Justification:
NSPS 40 CFR 60.330 Subpart GG	**Stationary Gas Turbines**	No	N/A	No stationary gas turbines are operated at the site.
NSPS 40 CFR 60, Subpart KKK	Leaks of VOC from **Onshore Gas Plants**	No	N/A	This facility commenced construction after August 23, 2011. Thus, the facility is not subject to this subpart.
NSPS 40 CFR Part 60 Subpart LLL	Standards of Performance for **Onshore Natural Gas Processing**: SO_2 Emissions	No	N/A	The facility is a natural gas processing plant; however, there is no sulfur recovery plant. Thus, this location does not meet the applicability criteria of 40 CFR 60.640.
NSPS 40 CFR Part 60 Subpart OOOO	Standards of Performance for Crude Oil and Natural Gas Production, Transmission, and Distribution	Yes	Train 2	Reciprocating electric compressors 2-D-1 through 2-D-8 and fugitive components associated with Train 2 are existing affected facilities that will be relocated from another site and were previously subject to NSPS OOOO. Targa will make a final determination of NSPS OOOO/a/b applicability for these relocated sources and will comply with the NSPS as required. Train 2 will rely on the existing amine sweetening unit installed with Train 1, which is subject to NSPS OOOOa. Pneumatic devices and pumps will utilize instrument air.
NSPS 40 CFR Part 60 Subpart OOOOa	Standards of Performance for Crude Oil and Natural Gas Facilities for which Construction, Modification or Reconstruction Commenced **After** September 18, 2015	Yes	See Justification column	D-1 through D-7 are electric-driven compressors associated with Train 1 and were manufactured after September 18, 2015 and are thus subject to 60.5385a, 60.5410a, 60.5415a, and 60.5420a. T-1, T-2, T-3, T-4, and T-5 are storage vessels constructed after September 18, 2015 with federally enforceable limitations that limit emissions to less than 6 tpy of VOCs. T-6 is a storage vessel that emits less than 6 tpy of VOCs. As such, T1 to T6 are not subject to 60.5395a, 60.5410a, 60.5417a, 60.5420a. The amine units (single still vent EP-8) are sweetening units as defined in this subpart that were constructed after September 18, 2015. Per 60.5365a(g) (3) the amine units are required to comply with 60.5423a(c) but not required to comply with 60.5405a through 60.5407 and 60.5410a(g) and 60.5415a(g). The facility is defined as an onshore natural gas processing plant. Therefore fugitives are covered by 60.5400a, 60.5401a, 60.5402a, 60.5421a, and 60.5422a. Pneumatic devices and pumps will utilize instrument air.
NSPS 40 CFR Part 60 Subpart OOOOb	Standards of Performance for Crude Oil and Natural Gas Facilities for which Construction, Modification or Reconstruction Commenced **After** November 15, 2021	Yes (upon rule becoming final)	Train 3	Reciprocating electric compressors 3-D-1 through 3-D-8 and fugitives associated with Train 3 will be new affected facilities for the purpose of NSPS OOOOb. Targa will make a final applicability determination once the rule is final and will comply as required. Train 3 will rely on the existing amine sweetening unit installed with Train 1, which is subject to NSPS OOOOa. Pneumatic devices and pumps will utilize instrument air.
NSPS 40 CFR 60 Subpart IIII	Standards of performance for Stationary Compression Ignition Internal Combustion Engines	No	N/A	No RICE operated at the site.

Federal Regulation Citation	Title	Applies? Enter Yes or No	Unit(s) or Facility	Justification:
NSPS 40 CFR Part 60 Subpart JJJJ	Standards of Performance for Stationary Spark Ignition Internal Combustion Engines	No	N/A	No RICE operated at the site.
NESHAP 40 CFR 61 Subpart A	General Provisions	No	Units Subject to 40 CFR 61	No 40 CFR Part 61 sources at the site.
NESHAP 40 CFR 61 Subpart V	National Emission Standards for **Equipment Leaks** (Fugitive Emission Sources)	No	N/A	No units at the site operate in more than 10 wt% VHAP service.
MACT 40 CFR 63, Subpart A	General Provisions	Yes	Units Subject to 40 CFR 63	This facility is an area source for HAPs. Area source provisions of 40 CFR Part 63 subpart HH apply to the glycol dehydrators at the site.
MACT 40 CFR 63.760 Subpart HH	Oil and Natural Gas Production Facilities	Yes	EP-7 2-EP-7 3-EP-7	This facility is a HAP Area Source and is subject to the requirements of 40 CFR 63 Subpart HH. Dehydrators EP-7, 2-EP-7, 3-EP-7 have actual and potential emissions less than 1 tpy (0.9 Megagrams per year) and are therefore exempt from control requirements per 40 CFR 63.764(e)(1)(ii). Records of the exempt status will be maintained as required in 40 CFR 63.774(d)(1).
MACT 40 CFR 63 Subpart HHH	National Emission Standards for Hazardous Air Pollutants From Natural Gas Transmission and Storage Facilities	No	N/A	This facility is not a natural gas transmission or storage facility. Thus, this subpart does not apply.
MACT 40 CFR 63 Subpart DDDDD	National Emission Standards for Hazardous Air Pollutants for Major Industrial, Commercial, and Institutional Boilers & Process Heaters	No	N/A	This regulation establishes national emission standards for hazardous air pollutants for major industrial, commercial, and institutional boilers and process heaters at Major sources of HAPs. The facility is an area source of HAPs; therefore, this regulation does not apply.
MACT 40 CFR 63 Subpart ZZZZ	National Emissions Standards for Hazardous Air Pollutants for Stationary Reciprocating Internal Combustion Engines (**RICE MACT**)	No	N/A	No RICE operated at the site

Federal Regulation Citation	Title	Applies? Enter Yes or No	Unit(s) or Facility	Justification:
MACT 40 CFR 63, Subpart JJJJJJ	**NESHAPS for Industrial, Commercial, and Institutional Boilers Area Sources**	No	N/A	Heaters at the site only burn gaseous fuel and are therefore exempt per 40 CFR 63.1195(e) and 63.1127.
40 CFR 64	**Compliance Assurance Monitoring**			CAM will be addressed as part of the initial Title V permit application.
40 CFR 68	**Chemical Accident Prevention**	Yes	Facility	An owner or operator of a stationary source that has more than a threshold quantity of a regulated substance in a process, as determined under §68.115, See 40 CFR 68
Title VI – 40 CFR 82	Protection of **Stratospheric Ozone**	No	N/A	This regulation establishes a regulation for protection of the stratospheric ozone. The regulation is not applicable because the facility does not "service", "maintain", or "repair" class I or class II appliances nor "disposes" of the appliances [40 CFR Part 82.1(a)].

Section 14

Operational Plan to Mitigate Emissions

(Submitting under 20.2.70, 20.2.72, 20.2.74 NMAC)

☐ **Title V Sources** (20.2.70 NMAC)**:** By checking this box and certifying this application the permittee certifies that it has developed an **Operational Plan to Mitigate Emissions During Startups, Shutdowns, and Emergencies** defining the measures to be taken to mitigate source emissions during startups, shutdowns, and emergencies as required by 20.2.70.300.D.5(f) and (g) NMAC. This plan shall be kept on site to be made available to the Department upon request. This plan should not be submitted with this application.

☑ **NSR** (20.2.72 NMAC)**, PSD** (20.2.74 NMAC) **& Nonattainment** (20.2.79 NMAC) **Sources:** By checking this box and certifying this application the permittee certifies that it has developed an **Operational Plan to Mitigate Source Emissions During Malfunction, Startup, or Shutdown** defining the measures to be taken to mitigate source emissions during malfunction, startup, or shutdown as required by 20.2.72.203.A.5 NMAC. This plan shall be kept on site to be made available to the Department upon request. This plan should not be submitted with this application.

☑ **Title V** (20.2.70 NMAC)**, NSR** (20.2.72 NMAC)**, PSD** (20.2.74 NMAC) **& Nonattainment** (20.2.79 NMAC) **Sources:** By checking this box and certifying this application the permittee certifies that it has established and implemented a Plan to Minimize Emissions During Routine or Predictable Startup, Shutdown, and Scheduled Maintenance through work practice standards and good air pollution control practices as required by 20.2.7.14.A and B NMAC. This plan shall be kept on site or at the nearest field office to be made available to the Department upon request. This plan should not be submitted with this application.

Section 15

Alternative Operating Scenarios

(Submitting under 20.2.70, 20.2.72, 20.2.74 NMAC)

Alternative Operating Scenarios: Provide all information required by the department to define alternative operating scenarios. This includes process, material and product changes; facility emissions information; air pollution control equipment requirements; any applicable requirements; monitoring, recordkeeping, and reporting requirements; and compliance certification requirements. Please ensure applicable Tables in this application are clearly marked to show alternative operating scenario.

Construction Scenarios: When a permit is modified authorizing new construction to an existing facility, NMED includes a condition to clearly address which permit condition(s) (from the previous permit and the new permit) govern during the interval between the date of issuance of the modification permit and the completion of construction of the modification(s). There are many possible variables that need to be addressed such as: Is simultaneous operation of the old and new units permitted and, if so for example, for how long and under what restraints? In general, these types of requirements will be addressed in Section A100 of the permit, but additional requirements may be added elsewhere. Look in A100 of our NSR and/or TV permit template for sample language dealing with these requirements. Find these permit templates at: www.env.nm.gov/air-quality/permitting-section-procedures-and-guidance/. Compliance with standards must be maintained during construction, which should not usually be a problem unless simultaneous operation of old and new equipment is requested.

In this section, under the bolded title "Construction Scenarios", specify any information necessary to write these conditions, such as: conservative-realistic estimated time for completion of construction of the various units, whether simultaneous operation of old and new units is being requested (and, if so, modeled), whether the old units will be removed or decommissioned, any PSD ramifications, any temporary limits requested during phased construction, whether any increase in emissions is being requested as SSM emissions or will instead be handled as a separate Construction Scenario (with corresponding emission limits and conditions, etc.

There are no alternative operating scenarios at this facility.

Section 16

Air Dispersion Modeling

1) Minor Source Construction (20.2.72 NMAC) and Prevention of Significant Deterioration (PSD) (20.2.74 NMAC) ambient impact analysis (modeling): Provide an ambient impact analysis as required at 20.2.72.203.A(4) and/or 20.2.74.303 NMAC and as outlined in the Air Quality Bureau's Dispersion Modeling Guidelines found on the Planning Section's modeling website. If air dispersion modeling has been waived for one or more pollutants, attach the AQB Modeling Section modeling waiver approval documentation.
2) SSM Modeling: Applicants must conduct dispersion modeling for the total short term emissions during routine or predictable startup, shutdown, or maintenance (SSM) using realistic worst case scenarios following guidance from the Air Quality Bureau's dispersion modeling section. Refer to "Guidance for Submittal of Startup, Shutdown, Maintenance Emissions in Permit Applications (http://www.env.nm.gov/aqb/permit/app_form.html) for more detailed instructions on SSM emissions modeling requirements.
3) Title V (20.2.70 NMAC) ambient impact analysis: Title V applications must specify the construction permit and/or Title V Permit number(s) for which air quality dispersion modeling was last approved. Facilities that have only a Title V permit, such as landfills and air curtain incinerators, are subject to the same modeling required for preconstruction permits required by 20.2.72 and 20.2.74 NMAC.

What is the purpose of this application?	Enter an X for each purpose that applies
New PSD major source or PSD major modification (20.2.74 NMAC). See #1 above.	
New Minor Source or significant permit revision under 20.2.72 NMAC (20.2.72.219.D NMAC). See #1 above. **Note:** Neither modeling nor a modeling waiver is required for VOC emissions.	☑
Reporting existing pollutants that were not previously reported.	
Reporting existing pollutants where the ambient impact is being addressed for the first time.	
Title V application (new, renewal, significant, or minor modification. 20.2.70 NMAC). See #3 above.	
Relocation (20.2.72.202.B.4 or 72.202.D.3.c NMAC)	
Minor Source Technical Permit Revision 20.2.72.219.B.1.d.vi NMAC for like-kind unit replacements.	
Other: i.e. SSM modeling. See #2 above.	
This application does not require modeling since this is a No Permit Required (NPR) application.	
This application does not require modeling since this is a Notice of Intent (NOI) application (20.2.73 NMAC).	
This application does not require modeling according to 20.2.70.7.E(11), 20.2.72.203.A(4), 20.2.74.303, 20.2.79.109.D NMAC and in accordance with the Air Quality Bureau's Modeling Guidelines.	

Check each box that applies:

☐ See attached, approved modeling **waiver for all** pollutants from the facility.
☐ See attached, approved modeling **waiver for some** pollutants from the facility.
☑ Attached in Universal Application Form 4 (UA4) is a **modeling report for all** pollutants from the facility.
☐ Attached in UA4 is a **modeling report for some** pollutants from the facility.
☐ No modeling is required.

Section 17

Compliance Test History

(Submitting under 20.2.70, 20.2.72, 20.2.74 NMAC)

To show compliance with existing NSR permits conditions, you must submit a compliance test history. The table below provides an example.

N/A – there is no compliance test history for this facility.

Section 20

Other Relevant Information

Other relevant information. Use this attachment to clarify any part in the application that you think needs explaining. Reference the section, table, column, and/or field. Include any additional text, tables, calculations or clarifying information.

Additionally, the applicant may propose specific permit language for AQB consideration. In the case of a revision to an existing permit, the applicant should provide the old language and the new language in track changes format to highlight the proposed changes. If proposing language for a new facility or language for a new unit, submit the proposed operating condition(s), along with the associated monitoring, recordkeeping, and reporting conditions. In either case, please limit the proposed language to the affected portion of the permit.

The required Compliance History Disclosure Form is attached.

Air Permit Application
Compliance History Disclosure Form

Pursuant to Subsection 74-2-7(S) of the New Mexico Air Quality Control Act ("AQCA"), NMSA §§ 74-2-1 to -17, the New Mexico Environment Department ("Department") may deny any permit application or revoke any permit issued pursuant to the AQCA if, within ten years immediately preceding the date of submission of the permit application, the applicant met any one of the criteria outlined below. In order for the Department to deem an air permit application administratively complete, or issue an air permit for those permits without an administrative completeness determination process, the applicant must complete this Compliance History Disclosure Form as specified in Subsection 74-2-7(P). An existing permit holder (permit issued prior to June 18, 2021) shall provide this Compliance History Disclosure Form to the Department upon request.

Permittee/Applicant Company Name		**Expected Application Submittal Date**
Targa Northern Delaware, LLC		December 6, 2022
Permittee/Company Contact	**Phone**	**Email**
Tammy Wallace	713-584-1292	twallace@targaresources.com

	Within the 10 years preceding the expected date of submittal of the application, has the permittee or applicant:	
1	Knowingly misrepresented a material fact in an application for a permit?	☐ Yes ☒ No
2	Refused to disclose information required by the provisions of the New Mexico Air Quality Control Act?	☐ Yes ☒ No
3	Been convicted of a felony related to environmental crime in any court of any state or the United States?	☐ Yes ☒ No
4	Been convicted of a crime defined by state or federal statute as involving or being in restraint of trade, price fixing, bribery, or fraud in any court of any state or the United States?	☐ Yes ☒ No
5a	Constructed or operated any facility for which a permit was sought, including the current facility, without the required air quality permit(s) under 20.2.70 NMAC, 20.2.72 NMAC, 20.2.74 NMAC, 20.2.79 NMAC, or 20.2.84 NMAC?	☐ Yes ☒ No
5b	If "No" to question 5a, go to question 6. If "Yes" to question 5a, state whether each facility that was constructed or operated without the required air quality permit met at least one of the following exceptions: a. The unpermitted facility was discovered after acquisition during a timely environmental audit that was authorized by the Department; or b. The operator of the facility estimated that the facility's emissions would not require an air permit, **and** the operator applied for an air permit within 30 calendar days of discovering that an air permit was required for the facility.	☐ Yes ☐ No
6	Had any permit revoked or permanently suspended for cause under the environmental laws of any state or the United States?	☐ Yes ☒ No
7	For each "yes" answer, please provide an explanation and documentation.	

Section 22: Certification

Company Name: Targa Northern Delaware, LLC

I, Jimmy E Oxford, hereby certify that the information and data submitted in this application are true and as accurate as possible, to the best of my knowledge and professional expertise and experience.

Signed this 24th day of May, 2023 upon my oath or affirmation, before a notary of the State of TEXAS.

*Signature

5/24/23
Date

Jimmy E Oxford
Printed Name

VP of operations
Title

Scribed and sworn before me on this 24th day of May, 2023.

My authorization as a notary of the State of TEXAS expires on the 1st day of October, 2024.

Notary's Signature

5/24/23
Date

Russell Park
Notary's Printed Name

RUSSELL PARK
My Notary ID # 126679120
Expires October 1, 2024

*For Title V applications, the signature must be of the Responsible Official as defined in 20.2.70.7.AE NMAC.