NMED AIR QUALITY PERMIT
NSR SIGNIFICANT REVISION APPLICATION

XTO ENERGY INC.
COWBOY CENTRAL DELIVERY POINT (CDP)

Prepared By:

James Barron – Environmental & Regulatory Advisor

XTO Energy Inc.
22777 Springwoods Village Pkwy
Spring, TX 77389
(346) 566-9345

Adam Erenstein – Manager of Consulting Services

TRINITY CONSULTANTS
9400 Holly Ave NE
Bldg 3, Suite B
Albuquerque, NM 87122
(505) 266-6611

November 2023

Project 233201.0075

Trinity Consultants
9400 Holly Ave NE, Bldg 3, Ste B, Albuquerque, NM 87122 / P 505.266.6611 / **trinityconsultants.com**

November 8, 2023

Permit Programs Manager
NMED Air Quality Bureau
525 Camino de los Marquez Suite 1
Santa Fe, NM 87505-1816

RE: NSR Significant Revision Application
XTO Energy Inc. – Cowboy Central Delivery Point (CDP)

Permit Programs Manager:

XTO Energy Inc. is submitting an NSR Significant Revision application for Cowboy Central Delivery Point (CDP). The facility is located approximately 14.0 miles southeast of Malaga, New Mexico. Currently, this facility is permitted under #7877M1. The proposed modification includes adding six (6) oil tanks, updating fugitive component counts, and updating the flare emissions.

The format and content of this application are consistent with the Bureau's current policy regarding NSR Significant Revision applications; it is a complete application package using the most current application form. Enclosed is a hard copy of the application, including the original certification. Please feel free to contact either myself at (505) 266-6611 or by email at aerenstein@trinityconsultants.com if you have any questions regarding this application. Alternatively, you may contact James Barron, Environmental & Regulatory Advisor for XTO Energy Inc., at (346) 566-9345 or by email at James.Barron@exxonmobil.com.

Sincerely,

Adam Erenstein
Manager of Consulting Services

Trinity Project File 233201.0075

656520

TRINITY CONSULTANTS, INC.
12700 PARK CENTRAL DRIVE STE. 600
DALLAS, TX 75251-1546
(972) 661-8100

JPMorgan
JPMorgan Chase Bank, N.A.
Dallas, Texas
88-88/1113

Fraud Protected by Positive Pay

CHECK DATE September 22, 2023

PAY TO THE ORDER OF

Five Hundred and 00/100 Dollars

New Mexico Environmental Department
Air Quality Bureau
525 Camino de los Marquez
Suite 1
Santa Fe, NM 87505-1816

AMOUNT 500.00

NOT VALID AFTER 90 DAYS

AUTHORIZED SIGNATURE

Details on back

⑈656520⑈ ⑆111300880⑆ 9319954724⑈

TRINITY CONSULTANTS, INC. Check Date: 9/22/2023 656520

Invoice Number	Date	Voucher	Amount	Discounts	Previous Pay	Net Amount
9232332010075NSRAF	9/21/2023	0151953	500.00			500.00
New Mexico Environmental Department		TOTAL	500.00			500.00
CHASE BANK-	24	00006134				

656520

PRODUCT SSLT500 Deluxe Corporation 1-800-328-0304 or www.deluxe.com/shop

28644699001

Mail Application To:		**For Department use only:**
New Mexico Environment Department Air Quality Bureau Permits Section< 525 Camino de los Marquez, Suite 1 Santa Fe, New Mexico, 87505 Phone: (505) 476-4300 Fax: (505) 476-4375 www.env.nm.gov/aqb		

Universal Air Quality Permit Application

Use this application for NOI, NSR, or Title V sources.

Use this application for: the initial application, modifications, technical revisions, and renewals. For technical revisions, complete Sections, 1-A, 1-B, 2-E, 3, 9 and any other sections that are relevant to the requested action; coordination with the Air Quality Bureau permit staff prior to submittal is encouraged to clarify submittal requirements and to determine if more or less than these sections of the application are needed. Use this application for streamline permits as well.

This application is submitted as (check all that apply): ☐ Request for a No Permit Required Determination (no fee)
☐ **Updating** an application currently under NMED review. Include this page and all pages that are being updated (no fee required).
Construction Status: ☐ Not Constructed ☒ Existing Permitted (or NOI) Facility ☐ Existing Non-permitted (or NOI) Facility
Minor Source: ☐ NOI 20.2.73 NMAC ☒ 20.2.72 NMAC application or revision ☐ 20.2.72.300 NMAC Streamline application
Title V Source: ☐ Title V (new) ☐ Title V renewal ☐ TV minor mod. ☐ TV significant mod. ☐ TV Acid Rain: ☐ New ☐ Renewal
PSD Major Source: ☐ PSD major source (new) ☐ Minor Modification to a PSD source ☐ a PSD major modification

Acknowledgements:

☒ I acknowledge that a pre-application meeting is available to me upon request. ☐ Title V Operating, Title IV Acid Rain, and NPR applications have no fees.
☒ $500 NSR application Filing Fee enclosed OR ☐ The full permit fee associated with 10 fee points (required w/ streamline applications).
☒ Check No.: **656520** in the amount of **$500**
☒ I acknowledge the required submittal format for the hard copy application is printed double sided 'head-to-toe', 2-hole punched (except the Sect. 2 landscape tables is printed 'head-to-head'), numbered tab separators. Incl. a copy of the check on a separate page.
☒ I acknowledge there is an annual fee for permits in addition to the permit review fee: www.env.nm.gov/air-quality/permit-fees-2/.
☐ This facility qualifies for the small business fee reduction per 20.2.75.11.C. NMAC. The full $500.00 filing fee is included with this application and I understand the fee reduction will be calculated in the balance due invoice. The Small Business Certification Form has been previously submitted or is included with this application. (Small Business Environmental Assistance Program Information: www.env.nm.gov/air-quality/small-biz-eap-2/.)

Citation: Please provide the **low level citation** under which this application is being submitted: **20.2.72.219.D(1) NMAC**
(e.g. application for a new minor source would be 20.2.72.200.A NMAC, one example for a Technical Permit Revision is 20.2.72.219.B.1.b NMAC, a Title V acid rain application would be: 20.2.70.200.C NMAC)

Section 1 – Facility Information

Section 1-A: Company Information		AI # if known: 38481	Updating Permit/NOI #: 7877M1
1	Facility Name: Cowboy Central Delivery Point (CDP)	Plant primary SIC Code (4 digits): 1311	
		Plant NAIC code (6 digits): 211120	
a	Facility Street Address (If no facility street address, provide directions from a prominent landmark): 14 mi SE of Malaga, NM.		
2	Plant Operator Company Name: XTO Energy Inc.	Phone/Fax: (346) 566-9345 / N/A	
a	Plant Operator Address: 22777 Springwoods Village Pkwy, Spring, TX 77389		

b	Plant Operator's New Mexico Corporate ID or Tax ID: 1522747	
3	Plant Owner(s) name(s): XTO Energy Inc.	Phone/Fax: (346) 566-9345 / N/A
a	Plant Owner(s) Mailing Address(s): 22777 Springwoods Village Pkwy, Spring, TX 77389	
4	Bill To (Company): XTO Energy Inc.	Phone/Fax: (346) 566-9345 / N/A
a	Mailing Address: 22777 Springwoods Village Pkwy, Spring, TX 77389	E-mail: James.Barron@exxonmobil.com
5	☒ Preparer: Adam Erenstein ☒ Consultant: Trinity Consultant Inc.	Phone/Fax: (505) 266-6611
a	Mailing Address: 9400 Holly Ave NE, Bldg. 3, Ste. B, Albuquerque, NM 87122	E-mail: aerenstein@trinityconsultants.com
6	Plant Operator Contact: James Barron	Phone/Fax: (346) 566-9345 / N/A
a	Address: 22777 Springwoods Village Pkwy, Spring, TX 77389	E-mail: James.Barron@exxonmobil.com
7	Air Permit Contact: James Barron	Title: Environmental & Regulatory Advisor
a	E-mail: James.Barron@exxonmobil.com	Phone/Fax: (346) 566-9345 / N/A
b	Mailing Address: 22777 Springwoods Village Pkwy, Spring, TX 77389	
c	The designated Air permit Contact will receive all official correspondence (i.e. letters, permits) from the Air Quality Bureau.	

Section 1-B: Current Facility Status

1.a	Has this facility already been constructed? ☒ Yes ☐ No	1.b If yes to question 1.a, is it currently operating in New Mexico? ☒ Yes ☐ No
2	If yes to question 1.a, was the existing facility subject to a Notice of Intent (NOI) (20.2.73 NMAC) before submittal of this application? ☐ Yes ☒ No	If yes to question 1.a, was the existing facility subject to a construction permit (20.2.72 NMAC) before submittal of this application? ☐ Yes ☒ No
3	Is the facility currently shut down? ☐ Yes ☒ No	If yes, give month and year of shut down (MM/YY):
4	Was this facility constructed before 8/31/1972 and continuously operated since 1972? ☐ Yes ☒ No	
5	If Yes to question 3, has this facility been modified (see 20.2.72.7.P NMAC) or the capacity increased since 8/31/1972? ☐ Yes ☐ No ☒ N/A	
6	Does this facility have a Title V operating permit (20.2.70 NMAC)? ☒ Yes ☐ No	If yes, the permit No. is: P-297; Due to be issued by 5/19/2023.
7	Has this facility been issued a No Permit Required (NPR)? ☐ Yes ☒ No	If yes, the NPR No. is: N/A
8	Has this facility been issued a Notice of Intent (NOI)? ☐ Yes ☒ No	If yes, the NOI No. is: N/A
9	Does this facility have a construction permit (20.2.72/20.2.74 NMAC)? ☒ Yes ☐ No	If yes, the permit No. is: 7877M1
10	Is this facility registered under a General permit (GCP-1, GCP-2, etc.)? ☐ Yes ☒ No	If yes, the register No. is: N/A

Section 1-C: Facility Input Capacity & Production Rate

1	What is the facility's maximum input capacity, specify units (reference here and list capacities in Section 20, if more room is required)			
a	Current	Hourly: 41.67 MMSCF Natural Gas 25,000 bbl Oil 7,916.67 bbl Natural Gas Liquid	Daily: 1 BSCF Natural Gas 600,000 bbl Oil 190,000 bbl Natural Gas Liquid	Annually: 365 BSCF Natural Gas 219 MMbbl Oil 69.35 MMbbl Natural Gas Liquid
b	Proposed	Hourly: 41.67 MMSCF Natural Gas 25,000 bbl Oil 7,916.67 bbl Natural Gas Liquid	Daily: 1 BSCF Natural Gas 600,000 bbl Oil 190,000 bbl Natural Gas Liquid	Annually: 365 BSCF Natural Gas 219 MMbbl Oil 69.35 MMbbl Natural Gas Liquid
2	What is the facility's maximum production rate, specify units (reference here and list capacities in Section 20, if more room is required)			
a	Current	Hourly: 41.67 MMSCF Natural Gas 25,000 bbl Oil	Daily: 1 BSCF Natural Gas 600,000 bbl Oil	Annually: 365 BSCF Natural Gas 219 MMbbl Oil

		7,916.67 bbl Natural Gas Liquid	190,000 bbl Natural Gas Liquid	69.35 MMbbl Natural Gas Liquid
b	Proposed	Hourly: 41.67 MMSCF Natural Gas 25,000 bbl Oil 7,916.67 bbl Natural Gas Liquid	Daily: 1 BSCF Natural Gas 600,000 bbl Oil 190,000 bbl Natural Gas Liquid	Annually: 365 BSCF Natural Gas 219 MMbbl Oil 69.35 MMbbl Natural Gas Liquid

Section 1-D: Facility Location Information

1	Latitude (decimal degrees): 32.160000	Longitude (decimal degrees): -103.841667	County: Eddy	Elevation (ft): 3397
2	UTM Zone: ☐ 12 or ☒ 13	Datum: ☐ NAD 83 ☒ WGS 84		
a	UTM E (in meters, to nearest 10 meters): 609,224 m	UTM N (in meters, to nearest 10 meters): 3,558,758 m		
3	Name and zip code of nearest New Mexico town: Malaga, NM 88263			
4	Detailed Driving Instructions from nearest NM town (attach a road map if necessary): Head W on Duarte Rd. for 1.3 mi. to R on McDonald Rd. Drive 11.2 mi. to R on Twin Wells Rd. In 0.6 mi. take slight left to stay on Twin Wells Rd. Drive 1.4 mi. to R on Buck Jackson Rd. Site will be of L in 0.6 mi.			
5	The facility is 14 miles southeast of Malaga, NM 88263			
6	Land Status of facility (check one): ☐ Private ☐ Indian/Pueblo ☐ Government ☒ BLM ☐ Forest Service ☐ Military			
7	List all municipalities, Indian tribes, and counties within a ten (10) mile radius (20.2.72.203.B.2 NMAC) of the property on which the facility is proposed to be constructed or operated: Eddy and Lea			
8	**20.2.72** NMAC applications **only**: Will the property on which the facility is proposed to be constructed or operated be closer than 50 km (31 miles) to other states, Bernalillo County, or a Class I area (see www.env.nm.gov/air-quality/modeling-publications/)? ☒ Yes ☐ No (20.2.72.206.A.7 NMAC) If yes, list all with corresponding distances in kilometers: Carlsbad Caverns National Park – 49.9 km. Texas ~17.7 km.			
9	Name nearest Class I area: Carlsbad Caverns National Park			
10	Shortest distance (in km) from facility boundary to the boundary of the nearest Class I area (to the nearest 10 meters): 49.9 km			
11	Distance (meters) from the perimeter of the Area of Operations (AO is defined as the plant site inclusive of all disturbed lands, including mining overburden removal areas) to nearest residence, school or occupied structure: 19,730 m			
12	Method(s) used to delineate the Restricted Area: Fencing "**Restricted Area**" is an area to which public entry is effectively precluded. Effective barriers include continuous fencing, continuous walls, or other continuous barriers approved by the Department, such as rugged physical terrain with steep grade that would require special equipment to traverse. If a large property is completely enclosed by fencing, a restricted area within the property may be identified with signage only. Public roads cannot be part of a Restricted Area.			
13	Does the owner/operator intend to operate this source as a portable stationary source as defined in 20.2.72.7.X NMAC? ☐ Yes ☒ No A portable stationary source is not a mobile source, such as an automobile, but a source that can be installed permanently at one location or that can be re-installed at various locations, such as a hot mix asphalt plant that is moved to different job sites.			
14	Will this facility operate in conjunction with other air regulated parties on the same property? ☒ No ☐ Yes If yes, what is the name and permit number (if known) of the other facility?			

Section 1-E: Proposed Operating Schedule (The 1-E.1 & 1-E.2 operating schedules may become conditions in the permit.)

1	Facility **maximum** operating ($\frac{hours}{day}$): 24	($\frac{days}{week}$): 7	($\frac{weeks}{year}$): 52	($\frac{hours}{year}$): 8760	
2	Facility's maximum daily operating schedule (if less than 24 $\frac{hours}{day}$)? Start: N/A	☐AM ☐PM	End: N/A	☐AM ☐PM	
3	Month and year of anticipated start of construction: upon receipt of permit				
4	Month and year of anticipated construction completion: TBD				
5	Month and year of anticipated startup of new or modified facility: TBD				

6	Will this facility operate at this site for more than one year? ☒ Yes ☐ No

Section 1-F: Other Facility Information

1	Are there any current Notice of Violations (NOV), compliance orders, or any other compliance or enforcement issues related to this facility? ☐ Yes ☒ No If yes, specify:		
a	If yes, NOV date or description of issue: N/A		NOV Tracking No: N/A
b	Is this application in response to any issue listed in 1-F, 1 or 1a above? ☐ Yes ☒ No If Yes, provide the 1c & 1d info below:		
c	Document Title: N/A	Date: N/A	Requirement # (or page # and paragraph #): N/A
d	Provide the required text to be inserted in this permit: N/A		
2	Is air quality dispersion modeling or modeling waiver being submitted with this application? ☐ Yes ☒ No		
3	Does this facility require an "Air Toxics" permit under 20.2.72.400 NMAC & 20.2.72.502, Tables A and/or B? ☐ Yes ☒ No		
4	Will this facility be a source of federal Hazardous Air Pollutants (HAP)? ☒ Yes ☐ No		
a	If Yes, what type of source? ☐ **Major** (☐ ≥10 tpy of any single HAP **OR** ☐ ≥25 tpy of any combination of HAPS) **OR** ☒ **Minor** (☒ <10 tpy of any single HAP **AND** ☒ <25 tpy of any combination of HAPS)		
5	Is any unit exempt under 20.2.72.202.B.3 NMAC? ☐ Yes ☑ No		
a	If yes, include the name of company providing commercial electric power to the facility: N/A Commercial power is purchased from a commercial utility company, which specifically does not include power generated on site for the sole purpose of the user.		

Section 1-G: Streamline Application (This section applies to 20.2.72.300 NMAC Streamline applications only)

1	☐ I have filled out Section 18, "Addendum for Streamline Applications."	☒ N/A (This is not a Streamline application.)

Section 1-H: Current Title V Information - Required for all applications from TV Sources

(Title V-source required information for all applications submitted pursuant to 20.2.72 NMAC (Minor Construction Permits), or 20.2.74/20.2.79 NMAC (Major PSD/NNSR applications), and/or 20.2.70 NMAC (Title V))

1	Responsible Official (R.O.) (20.2.70.300.D.2 NMAC):		Phone:
a	R.O. Title:	R.O. e-mail:	
b	R. O. Address:		
2	Alternate Responsible Official (20.2.70.300.D.2 NMAC):		Phone:
a	A. R.O. Title:	A. R.O. e-mail:	
b	A. R. O. Address:		
3	Company's Corporate or Partnership Relationship to any other Air Quality Permittee (List the names of any companies that have operating (20.2.70 NMAC) permits and with whom the applicant for this permit has a corporate or partnership relationship):		
4	Name of Parent Company ("Parent Company" means the primary name of the organization that owns the company to be permitted wholly or in part.):		
a	Address of Parent Company:		
5	Names of Subsidiary Companies ("Subsidiary Companies" means organizations, branches, divisions or subsidiaries, which are owned, wholly or in part, by the company to be permitted.):		
6	Telephone numbers & names of the owners' agents and site contacts familiar with plant operations:		

7	Affected Programs to include Other States, local air pollution control programs (i.e. Bernalillo) and Indian tribes: Will the property on which the facility is proposed to be constructed or operated be closer than 80 km (50 miles) from other states, local pollution control programs, and Indian tribes and pueblos (20.2.70.402.A.2 and 20.2.70.7.B)? If yes, state which ones and provide the distances in kilometers:

Section 1-I – Submittal Requirements

Each 20.2.73 NMAC (**NOI**), a 20.2.70 NMAC (**Title V**), a 20.2.72 NMAC (**NSR** minor source), or 20.2.74 NMAC (**PSD**) application package shall consist of the following:

Hard Copy Submittal Requirements:

1) One hard copy **original signed and notarized application package** **printed double sided 'head-to-toe'** **2-hole punched** as we bind the document on top, not on the side; except Section 2 (landscape tables), which should be head-to-head. Please use **numbered tab separators** in the hard copy submittal(s) as this facilitates the review process. For NOI submittals only, hard copies of UA1, Tables 2A, 2D & 2F, Section 3 and the signed Certification Page are required. Please include a copy of the check on a separate page.

2) If the application is for a minor NSR, PSD, NNSR, or Title V application, include one working hard **copy** for Department use. This copy should be printed in book form, 3-hole punched, and **must be double sided**. Note that this is in addition to the head-to-to 2-hole punched copy required in 1) above. Minor NSR Technical Permit revisions (20.2.72.219.B NMAC) only need to fill out Sections 1-A, 1-B, 3, and should fill out those portions of other Section(s) relevant to the technical permit revision. TV Minor Modifications need only fill out Sections 1-A, 1-B, 1-H, 3, and those portions of other Section(s) relevant to the minor modification. NMED may require additional portions of the application to be submitted, as needed.

3) The entire NOI or Permit application package, including the full modeling study, should be submitted electronically. Electronic files for applications for NOIs, any type of General Construction Permit (GCP), or technical revisions to NSRs must be submitted with compact disk (CD) or digital versatile disc (DVD). For these permit application submittals, **two** CD copies are required (in sleeves, not crystal cases, please), with additional CD copies as specified below. NOI applications require only a single CD submittal. Electronic files for other New Source Review (construction) permits/permit modifications or Title V permits/permit modifications can be submitted on CD/DVD or sent through AQB's secure file transfer service.

Electronic files sent by (check one):

☐ CD/DVD attached to paper application

☒ Secure electronic transfer. Air Permit Contact Name Adam Erenstein, Email aerenstein@trinityconsultants.com

Phone number (505) 266-6611

a. If the file transfer service is chosen by the applicant, after receipt of the application, the Bureau will email the applicant with instructions for submitting the electronic files through a secure file transfer service. Submission of the electronic files through the file transfer service needs to be completed within 3 business days after the invitation is received, so the applicant should ensure that the files are ready when sending the hard copy of the application. The applicant will not need a password to complete the transfer. **Do not use the file transfer service for NOIs, any type of GCP, or technical revisions to NSR permits.**

4) Optionally, the applicant may submit the files with the application on compact disk (CD) or digital versatile disc (DVD) following the instructions above and the instructions in 5 for applications subject to PSD review.

5) If **air dispersion modeling** is required by the application type, include the **NMED Modeling Waiver** and/or electronic air dispersion modeling report, input, and output files. The dispersion modeling ***summary report only*** should be submitted as hard copy(ies) unless otherwise indicated by the Bureau.

6) If the applicant submits the electronic files on CD and the application is subject to PSD review under 20.2.74 NMAC (PSD) or NNSR under 20.2.79 NMC include,
   a. one additional CD copy for US EPA,
   b. one additional CD copy for each federal land manager affected (NPS, USFS, FWS, USDI) and,
   c. one additional CD copy for each affected regulatory agency other than the Air Quality Bureau.

   If the application is submitted electronically through the secure file transfer service, these extra CDs do not need to be submitted.

Electronic Submittal Requirements [in addition to the required hard copy(ies)]:

1) All required electronic documents shall be submitted as 2 separate CDs or submitted through the AQB secure file transfer service. Submit a single PDF document of the entire application as submitted and the individual documents comprising the application.

2) The documents should also be submitted in Microsoft Office compatible file format (Word, Excel, etc.) allowing us to access the text and formulas in the documents (copy & paste). Any documents that cannot be submitted in a Microsoft Office compatible format shall be saved as a PDF file from within the electronic document that created the file. If you are unable to provide Microsoft office compatible electronic files or internally generated PDF files of files (items that were not created electronically: i.e. brochures, maps, graphics, etc,), submit these items in hard copy format. We must be able to review the formulas and inputs that calculated the emissions.

3) It is preferred that this application form be submitted as 4 electronic files (3 MSWord docs: Universal Application section 1 [UA1], Universal Application section 3-19 [UA3], and Universal Application 4, the modeling report [UA4]) and 1 Excel file of the tables (Universal Application section 2 [UA2]). Please include as many of the 3-19 Sections as practical in a single MS Word electronic document. Create separate electronic file(s) if a single file becomes too large or if portions must be saved in a file format other than MS Word.

4) The electronic file names shall be a maximum of 25 characters long (including spaces, if any). The format of the electronic Universal Application shall be in the format: "A-3423-FacilityName". The "A" distinguishes the file as an application submittal, as opposed to other documents the Department itself puts into the database. Thus, all electronic application submittals should begin with "A-". Modifications to existing facilities should use the core permit number (i.e. '3423') the Department assigned to the facility as the next 4 digits. Use 'XXXX' for new facility applications. The format of any separate electronic submittals (additional submittals such as non-Word attachments, re-submittals, application updates) and Section document shall be in the format: "A-3423-9-description", where "9" stands for the section # (in this case Section 9-Public Notice). Please refrain, as much as possible, from submitting any scanned documents as this file format is extremely large, which uses up too much storage capacity in our database. Please take the time to fill out the header information throughout all submittals as this will identify any loose pages, including the Application Date (date submitted) & Revision number (0 for original, 1, 2, etc.; which will help keep track of subsequent partial update(s) to the original submittal. Do not use special symbols (#, @, etc.) in file names. The footer information should not be modified by the applicant.

Table of Contents

Section 1:	**General Facility Information**
Section 2:	**Tables**
Section 3:	**Application Summary**
Section 4:	**Process Flow Sheet**
Section 5:	**Plot Plan Drawn to Scale**
Section 6:	**All Calculations**
Section 7:	**Information Used to Determine Emissions**
Section 8:	**Map(s)**
Section 9:	**Proof of Public Notice**
Section 10:	**Written Description of the Routine Operations of the Facility**
Section 11:	**Source Determination**
Section 12:	**PSD Applicability Determination for All Sources & Special Requirements for a PSD Application**
Section 13:	**Discussion Demonstrating Compliance with Each Applicable State & Federal Regulation**
Section 14:	**Operational Plan to Mitigate Emissions**
Section 15:	**Alternative Operating Scenarios**
Section 16:	**Air Dispersion Modeling**
Section 17:	**Compliance Test History**
Section 18:	**Addendum for Streamline Applications (streamline applications only)**
Section 19:	**Requirements for the Title V (20.2.70 NMAC) Program (Title V applications only)**
Section 20:	**Other Relevant Information**
Section 21:	**Addendum for Landfill Applications**
Section 22:	**Certification Page**

Table 2-A: Regulated Emission Sources

Unit and stack numbering must correspond throughout the application package. If applying for a NOI under 20.2.73 NMAC, equipment exemptions under 2.72.202 NMAC do not apply.

Unit Number[1]	Source Description	Make	Model #	Serial #	Manufacturer's Rated Capacity[3] (Specify Units)	Requested Permitted Capacity[3] (Specify Units)	Date of Manufacture[2] / Date of Construction/ Reconstruction[2]	Controlled by Unit # / Emissions vented to Stack #	Source Classification Code (SCC)	For Each Piece of Equipment, Check One	RICE Ignition Type (CI, SI, 4SLB, 4SRB, 2SLB)[4]	Replacing Unit No.
SHTR1	Stabilization Hot Oil Heater (58.93 MMBtu/hr)	THM	SHO5000	PK-6010 H-6012	58.93 MMBtu/hr	58.93 MMBtu/hr	2019 / 2019	N/A / SHTR1	31000403	☑ Existing (unchanged) ☐ To be Removed ☐ New/Additional ☐ Replacement Unit ☐ To Be Modified ☐ To be Replaced	N/A	N/A
SHTR2	Stabilization Hot Oil Heater (58.93 MMBtu/hr)	THM	SHO5000	PK-6020 H-6022	58.93 MMBtu/hr	58.93 MMBtu/hr	2019 / 2019	N/A / SHTR2	31000403	☑ Existing (unchanged) ☐ To be Removed ☐ New/Additional ☐ Replacement Unit ☐ To Be Modified ☐ To be Replaced	N/A	N/A
SHTR3	Stabilization Hot Oil Heater (58.93 MMBtu/hr)	THM	SHO5000	PK-6030 H-6032	58.93 MMBtu/hr	58.93 MMBtu/hr	2019 / 2019	N/A / SHTR3	31000403	☑ Existing (unchanged) ☐ To be Removed ☐ New/Additional ☐ Replacement Unit ☐ To Be Modified ☐ To be Replaced	N/A	N/A
SHTR4	Stabilization Hot Oil Heater (58.93 MMBtu/hr)	THM	SHO5000	TBD	58.93 MMBtu/hr	58.93 MMBtu/hr	TBD / TBD	N/A / SHTR4	31000403	☑ Existing (unchanged) ☐ To be Removed ☐ New/Additional ☐ Replacement Unit ☐ To Be Modified ☐ To be Replaced	N/A	N/A
SHTR5	Stabilization Hot Oil Heater (58.93 MMBtu/hr)	THM	SHO5000	TBD	58.93 MMBtu/hr	58.93 MMBtu/hr	TBD / TBD	N/A / SHTR5	31000403	☑ Existing (unchanged) ☐ To be Removed ☐ New/Additional ☐ Replacement Unit ☐ To Be Modified ☐ To be Replaced	N/A	N/A
SHTR6	Stabilization Hot Oil Heater (58.93 MMBtu/hr)	THM	SHO5000	TBD	58.93 MMBtu/hr	58.93 MMBtu/hr	TBD / TBD	N/A / SHTR6	31000403	☑ Existing (unchanged) ☐ To be Removed ☐ New/Additional ☐ Replacement Unit ☐ To Be Modified ☐ To be Replaced	N/A	N/A
SHTR7	Stabilization Hot Oil Heater w/ SCR catalyst (58.93 MMBtu/hr)	THM	SHO5000	TBD	58.93 MMBtu/hr	58.93 MMBtu/hr	TBD / TBD	SHTR7-CAT / SHTR7	31000403	☑ Existing (unchanged) ☐ To be Removed ☐ New/Additional ☐ Replacement Unit ☐ To Be Modified ☐ To be Replaced	N/A	N/A
SHTR8	Stabilization Hot Oil Heater w/ SCR catalyst (58.93 MMBtu/hr)	THM	SHO5000	TBD	58.93 MMBtu/hr	58.93 MMBtu/hr	TBD / TBD	SHTR8-CAT / SHTR8	31000403	☑ Existing (unchanged) ☐ To be Removed ☐ New/Additional ☐ Replacement Unit ☐ To Be Modified ☐ To be Replaced	N/A	N/A
CHTR1	Cryo Hot Oil Heater (94.54 MMBtu/hr)	THM	TBD	PK-6110 H-6112	94.54 MMBtu/hr	94.54 MMBtu/hr	2019 / TBD	N/A / CHTR1	31000403	☑ Existing (unchanged) ☐ To be Removed ☐ New/Additional ☐ Replacement Unit ☐ To Be Modified ☐ To be Replaced	N/A	N/A
CHTR2	Cryo Hot Oil Heater (94.54 MMBtu/hr)	THM	TBD	TBD	94.54 MMBtu/hr	94.54 MMBtu/hr	TBD / TBD	NA / CHTR2	31000403	☑ Existing (unchanged) ☐ To be Removed ☐ New/Additional ☐ Replacement Unit ☐ To Be Modified ☐ To be Replaced	N/A	N/A

Table 2-A: Regulated Emission Sources

Unit and stack numbering must correspond throughout the application package. If applying for a NOI under 20.2.73 NMAC, equipment exemptions under 2.72.202 NMAC do not apply.

Unit Number[1]	Source Description	Make	Model #	Serial #	Manufacturer's Rated Capacity[3] (Specify Units)	Requested Permitted Capacity[3] (Specify Units)	Date of Manufacture[2] / Date of Construction/ Reconstruction[2]	Controlled by Unit # / Emissions vented to Stack #	Source Classification Code (SCC)	For Each Piece of Equipment, Check One	RICE Ignition Type (CI, SI, 4SLB, 4SRB, 2SLB)[4]	Replacing Unit No.
CHTR3	Cryo Hot Oil Heater w/ SCR Catalyst (94.54 MMBtu/hr)	THM	TBD	TBD	94.54 MMBtu/hr	94.54 MMBtu/hr	TBD TBD	CHTR3-CAT CHTR3	31000403	☑ Existing (unchanged) ☐ To be Removed ☐ New/Additional ☐ Replacement Unit ☐ To Be Modified ☐ To be Replaced	N/A	N/A
CHTR4	Cryo Hot Oil Heater w/ SCR Catalyst (94.54 MMBtu/hr)	THM	TBD	TBD	94.54 MMBtu/hr	94.54 MMBtu/hr	TBD TBD	CHTR4-CAT CHTR4	31000403	☑ Existing (unchanged) ☐ To be Removed ☐ New/Additional ☐ Replacement Unit ☐ To Be Modified ☐ To be Replaced	N/A	N/A
RHTR1	Regen Heater (35.25 MMBtu/hr)	THM	SHO2500	H-3132	35.25 MMBtu/hr	35.25 MMBtu/hr	TBD TBD	N/A RHTR1	31000405	☑ Existing (unchanged) ☐ To be Removed ☐ New/Additional ☐ Replacement Unit ☐ To Be Modified ☐ To be Replaced	N/A	N/A
RHTR2	Regen Heater (35.25 MMBtu/hr)	THM	SHO2500	TBD	35.25 MMBtu/hr	35.25 MMBtu/hr	TBD TBD	N/A RHTR2	31000405	☑ Existing (unchanged) ☐ To be Removed ☐ New/Additional ☐ Replacement Unit ☐ To Be Modified ☐ To be Replaced	N/A	N/A
RHTR3	Regen Heater (35.25 MMBtu/hr)	THM	SHO2500	TBD	35.25 MMBtu/hr	35.25 MMBtu/hr	TBD TBD	N/A RHTR3	31000405	☑ Existing (unchanged) ☐ To be Removed ☐ New/Additional ☐ Replacement Unit ☐ To Be Modified ☐ To be Replaced	N/A	N/A
RHTR4	Regen Heater (35.25 MMBtu/hr)	THM	SHO2500	TBD	35.25 MMBtu/hr	35.25 MMBtu/hr	TBD TBD	N/A RHTR4	31000405	☑ Existing (unchanged) ☐ To be Removed ☐ New/Additional ☐ Replacement Unit ☐ To Be Modified ☐ To be Replaced	N/A	N/A
FL1	Stabilizer Flare 1 (Dual Tip Flare)	Zeeco, Inc.	N/A	FS 6810 S.O # 35284	20 MMscfd	20 MMscfd	2018 2019	N/A FL1	31000160	☑ Existing (unchanged) ☐ To be Removed ☐ New/Additional ☐ Replacement Unit ☐ To Be Modified ☐ To be Replaced	N/A	N/A
FL2	Cryo Flare 2 (Dual Tip Flare)	Zeeco, Inc.	N/A	FS 6960 S.O # 38126	20 MMscfd	20 MMscfd	2019 2019	N/A FL2	31000160	☑ Existing (unchanged) ☐ To be Removed ☐ New/Additional ☐ Replacement Unit ☐ To Be Modified ☐ To be Replaced	N/A	N/A
FL3	Backup SSM/Emergency Flare 3 (Dual Tip Flare)	Zeeco, Inc.	N/A	TBD	20 MMscfd	20 MMscfd	TBD TBD	N/A FL3	31000160	☐ Existing (unchanged) ☐ To be Removed ☐ New/Additional ☐ Replacement Unit ☑ To Be Modified ☐ To be Replaced	N/A	N/A
FL1-FL3OVHD-SSM	FL1-FL3 Stabilizer Overhead SSM Gas	Zeeco, Inc.	N/A	N/A	250 MMscfd	250 MMscfd	N/A N/A	FL1-FL3 FL1-FL3OVHD-	31000160	☑ Existing (unchanged) ☐ To be Removed ☐ New/Additional ☐ Replacement Unit ☐ To Be Modified ☐ To be Replaced	N/A	N/A
FL1-FL3CRYO-SSM	FL1-FL3 Cryo Blowdown SSM Gas	Zeeco, Inc.	N/A	N/A	250 MMscfd	250 MMscfd	N/A N/A	FL1-FL3 FL1-FL3CRYO-	31000160	☑ Existing (unchanged) ☐ To be Removed ☐ New/Additional ☐ Replacement Unit ☐ To Be Modified ☐ To be Replaced	N/A	N/A
IFR1	Oil Storage Tank 1 (50,000 bbl)	Advance Tank	N/A	TK-4201	50,000 bbl	50,000 bbl	2019 2019	N/A IFR1	40400331	☐ Existing (unchanged) ☐ To be Removed ☐ New/Additional ☐ Replacement Unit ☑ To Be Modified ☐ To be Replaced	N/A	N/A

Table 2-A: Regulated Emission Sources

Unit and stack numbering must correspond throughout the application package. If applying for a NOI under 20.2.73 NMAC, equipment exemptions under 2.72.202 NMAC do not apply.

Unit Number[1]	Source Description	Make	Model #	Serial #	Manufacturer's Rated Capacity[3] (Specify Units)	Requested Permitted Capacity[3] (Specify Units)	Date of Manufacture[2] / Date of Construction/ Reconstruction[2]	Controlled by Unit # / Emissions vented to Stack #	Source Classification Code (SCC)	For Each Piece of Equipment, Check One	RICE Ignition Type (CI, SI, 4SLB, 4SRB, 2SLB)[4]	Replacing Unit No.
IFR2	Oil Storage Tank 2 (50,000 bbl)	Advance Tank	N/A	TK-4202	50,000 bbl	50,000 bbl	2019 2019	N/A IFR2	40400331	☐ Existing (unchanged) ☐ To be Removed ☐ New/Additional ☐ Replacement Unit ☑ To Be Modified ☐ To be Replaced	N/A	N/A
IFR3	Oil Storage Tank 3 (50,000 bbl)	Advance Tank	N/A	TK-4203	50,000 bbl	50,000 bbl	2019 2019	N/A IFR3	40400331	☐ Existing (unchanged) ☐ To be Removed ☐ New/Additional ☐ Replacement Unit ☑ To Be Modified ☐ To be Replaced	N/A	N/A
IFR4	Oil Storage Tank 4 (50,000 bbl)	Advance Tank	N/A	TK-4204	50,000 bbl	50,000 bbl	2019 2019	N/A IFR4	40400331	☐ Existing (unchanged) ☐ To be Removed ☐ New/Additional ☐ Replacement Unit ☑ To Be Modified ☐ To be Replaced	N/A	N/A
IFR5	Oil Storage Tank 5 (100,000 bbl)	TBD	N/A	TBD	100,000 bbl	100,000 bbl	TBD TBD	N/A IFR5	40400331	☐ Existing (unchanged) ☐ To be Removed ☐ New/Additional ☐ Replacement Unit ☑ To Be Modified ☐ To be Replaced	N/A	N/A
IFR6	Oil Storage Tank 6 (100,000 bbl)	TBD	N/A	TBD	100,000 bbl	100,000 bbl	TBD TBD	N/A IFR6	40400331	☐ Existing (unchanged) ☐ To be Removed ☐ New/Additional ☐ Replacement Unit ☑ To Be Modified ☐ To be Replaced	N/A	N/A
IFR7	Oil Storage Tank 7 (100,000 bbl)	TBD	N/A	TBD	100,000 bbl	100,000 bbl	TBD TBD	N/A IFR7	40400331	☐ Existing (unchanged) ☐ To be Removed ☐ New/Additional ☐ Replacement Unit ☑ To Be Modified ☐ To be Replaced	N/A	N/A
IFR8	Oil Storage Tank 8 (100,000 bbl)	TBD	N/A	TBD	100,000 bbl	100,000 bbl	TBD TBD	N/A IFR8	40400331	☐ Existing (unchanged) ☐ To be Removed ☐ New/Additional ☐ Replacement Unit ☑ To Be Modified ☐ To be Replaced	N/A	N/A
IFR9	Oil Storage Tank 9 (100,000 bbl)	TBD	N/A	TBD	100,000 bbl	100,000 bbl	TBD TBD	N/A IFR9	40400331	☐ Existing (unchanged) ☐ To be Removed ☑ New/Additional ☐ Replacement Unit ☐ To Be Modified ☐ To be Replaced	N/A	N/A
IFR10	Oil Storage Tank 10 (100,000 bbl)	TBD	N/A	TBD	100,000 bbl	100,000 bbl	TBD TBD	N/A IFR10	40400331	☐ Existing (unchanged) ☐ To be Removed ☑ New/Additional ☐ Replacement Unit ☐ To Be Modified ☐ To be Replaced	N/A	N/A
IFR11	Oil Storage Tank 11 (100,000 bbl)	TBD	N/A	TBD	100,000 bbl	100,000 bbl	TBD TBD	N/A IFR11	40400331	☐ Existing (unchanged) ☐ To be Removed ☑ New/Additional ☐ Replacement Unit ☐ To Be Modified ☐ To be Replaced	N/A	N/A
IFR12	Oil Storage Tank 12 (100,000 bbl)	TBD	N/A	TBD	100,000 bbl	100,000 bbl	TBD TBD	N/A IFR12	40400331	☐ Existing (unchanged) ☐ To be Removed ☑ New/Additional ☐ Replacement Unit ☐ To Be Modified ☐ To be Replaced	N/A	N/A
IFR13	Oil Storage Tank 13 (100,000 bbl)	TBD	N/A	TBD	100,000 bbl	100,000 bbl	TBD TBD	N/A IFR13	40400331	☐ Existing (unchanged) ☐ To be Removed ☑ New/Additional ☐ Replacement Unit ☐ To Be Modified ☐ To be Replaced	N/A	N/A
IFR14	Oil Storage Tank 14 (100,000 bbl)	TBD	N/A	TBD	100,000 bbl	100,000 bbl	TBD TBD	N/A IFR14	40400331	☐ Existing (unchanged) ☐ To be Removed ☑ New/Additional ☐ Replacement Unit ☐ To Be Modified ☐ To be Replaced	N/A	N/A
ECD1	Combustor	Zeeco, Inc.	N/A	TBD	N/A	N/A	TBD TBD	N/A ECD1	31000209	☑ Existing (unchanged) ☐ To be Removed ☐ New/Additional ☐ Replacement Unit ☐ To Be Modified ☐ To be Replaced	N/A	N/A
TO1	Thermal Oxidizer	Zeeco, Inc.	N/A	TO-6980 SO # 35595	25 MMbtu/hr	25 MMbtu/hr	2019 2019	N/A TO1	31000209	☑ Existing (unchanged) ☐ To be Removed ☐ New/Additional ☐ Replacement Unit ☐ To Be Modified ☐ To be Replaced	N/A	N/A

Table 2-A: Regulated Emission Sources

Unit and stack numbering must correspond throughout the application package. If applying for a NOI under 20.2.73 NMAC, equipment exemptions under 2.72.202 NMAC do not apply.

Unit Number[1]	Source Description	Make	Model #	Serial #	Manufacturer's Rated Capacity[3] (Specify Units)	Requested Permitted Capacity[3] (Specify Units)	Date of Manufacture[2] / Date of Construction/ Reconstruction[2]	Controlled by Unit # / Emissions vented to Stack #	Source Classification Code (SCC)	For Each Piece of Equipment, Check One	RICE Ignition Type (CI, SI, 4SLB, 4SRB, 2SLB)[4]	Replacing Unit No.
TO2	Thermal Oxidizer	Zeeco, Inc.	N/A	TBD	25 MMbtu/hr	25 MMbtu/hr	TBD TBD	N/A TO2	31000209	☑ Existing (unchanged) ☐ To be Removed ☐ New/Additional ☐ Replacement Unit ☐ To Be Modified ☐ To be Replaced	N/A	N/A
TO3	Thermal Oxidizer	Zeeco, Inc.	N/A	TBD	25 MMbtu/hr	25 MMbtu/hr	TBD TBD	N/A TO3	31000209	☑ Existing (unchanged) ☐ To be Removed ☐ New/Additional ☐ Replacement Unit ☐ To Be Modified ☐ To be Replaced	N/A	N/A
TO4	Thermal Oxidizer	Zeeco, Inc.	N/A	TBD	25 MMbtu/hr	25 MMbtu/hr	TBD TBD	N/A TO4	31000209	☑ Existing (unchanged) ☐ To be Removed ☐ New/Additional ☐ Replacement Unit ☐ To Be Modified ☐ To be Replaced	N/A	N/A
FUG	Fugitives	N/A	N/A	N/A	N/A	N/A	N/A N/A	N/A FUG	31088811	☐ Existing (unchanged) ☐ To be Removed ☐ New/Additional ☐ Replacement Unit ☑ To Be Modified ☐ To be Replaced	N/A	N/A
SSM	SSM Emissions	N/A	N/A	N/A	N/A	N/A	N/A N/A	N/A SSM	31088811	☑ Existing (unchanged) ☐ To be Removed ☐ New/Additional ☐ Replacement Unit ☐ To Be Modified ☐ To be Replaced	N/A	N/A
ROAD	Haul Road Fugitives	N/A	N/A	N/A	N/A	N/A	N/A N/A	N/A ROAD	31088811	☑ Existing (unchanged) ☐ To be Removed ☐ New/Additional ☐ Replacement Unit ☐ To Be Modified ☐ To be Replaced	N/A	N/A
AU1	Amine Sweetener 1	N/A	N/A	N/A	250 MMSCFD	250 MMSCFD	TBD TBD	TO1 TO1	31000305	☑ Existing (unchanged) ☐ To be Removed ☐ New/Additional ☐ Replacement Unit ☐ To Be Modified ☐ To be Replaced	N/A	N/A
AU2	Amine Sweetener 2	N/A	N/A	N/A	250 MMSCFD	250 MMSCFD	TBD TBD	TO2 TO2	31000305	☑ Existing (unchanged) ☐ To be Removed ☐ New/Additional ☐ Replacement Unit ☐ To Be Modified ☐ To be Replaced	N/A	N/A
AU3	Amine Sweetener 3	N/A	N/A	N/A	250 MMSCFD	250 MMSCFD	TBD TBD	TO3 TO3	31000305	☑ Existing (unchanged) ☐ To be Removed ☐ New/Additional ☐ Replacement Unit ☐ To Be Modified ☐ To be Replaced	N/A	N/A
AU4	Amine Sweetener 4	N/A	N/A	N/A	250 MMSCFD	250 MMSCFD	TBD TBD	TO4 TO4	31000305	☑ Existing (unchanged) ☐ To be Removed ☐ New/Additional ☐ Replacement Unit ☐ To Be Modified ☐ To be Replaced	N/A	N/A
GBS1	Gunbarrel Tank	Angelina Tank	N/A	TK-7001	1,000 bbl	1,000 bbl	2019 2019	ECD1 ECD1	31000506	☑ Existing (unchanged) ☐ To be Removed ☐ New/Additional ☐ Replacement Unit ☐ To Be Modified ☐ To be Replaced	N/A	N/A
PWTK1	Produced Water Tank 1	Alliance Tank Services	N/A	TK-7005	750 bbl	750 bbl	2019 2019	ECD1 ECD1	40400315	☑ Existing (unchanged) ☐ To be Removed ☐ New/Additional ☐ Replacement Unit ☐ To Be Modified ☐ To be Replaced	N/A	N/A
PWTK2	Produced Water Tank 2	Alliance Tank Services	N/A	TK-7006	750 bbl	750 bbl	2019 2019	ECD1 ECD1	40400315	☑ Existing (unchanged) ☐ To be Removed ☐ New/Additional ☐ Replacement Unit ☐ To Be Modified ☐ To be Replaced	N/A	N/A
SOTK1	Slop Oil Tank	Alliance Tank Services	N/A	TK-6895	500 bbl	500 bbl	2019 2019	ECD1 ECD1	40400311	☑ Existing (unchanged) ☐ To be Removed ☐ New/Additional ☐ Replacement Unit ☐ To Be Modified ☐ To be Replaced	N/A	N/A

Table 2-A: Regulated Emission Sources

Unit and stack numbering must correspond throughout the application package. If applying for a NOI under 20.2.73 NMAC, equipment exemptions under 2.72.202 NMAC do not apply.

Unit Number[1]	Source Description	Make	Model #	Serial #	Manufacturer's Rated Capacity[3] (Specify Units)	Requested Permitted Capacity[3] (Specify Units)	Date of Manufacture[2] / Date of Construction/ Reconstruction[2]	Controlled by Unit # / Emissions vented to Stack #	Source Classification Code (SCC)	For Each Piece of Equipment, Check One	RICE Ignition Type (CI, SI, 4SLB, 4SRB, 2SLB)[4]	Replacing Unit No.
SOTL	Slop Oil Truck Loading	TBD	N/A	N/A	210 bbl/day	210 bbl/day	N/A N/A	ECD1 SOTL	40400250	☑ Existing (unchanged) ☐ To be Removed ☐ New/Additional ☐ Replacement Unit ☐ To Be Modified ☐ To be Replaced	N/A	N/A
GEN1	Emergency Generator	Caterpillar	G3520H	TBD	3448 HP	3448 HP	TBD TBD	N/A GEN1	20200254	☑ Existing (unchanged) ☐ To be Removed ☐ New/Additional ☐ Replacement Unit ☐ To Be Modified ☐ To be Replaced	4SLB	N/A
GEN2	Emergency Generator	Caterpillar	G3520H	TBD	3448 HP	3448 HP	TBD TBD	N/A GEN2	20200254	☑ Existing (unchanged) ☐ To be Removed ☐ New/Additional ☐ Replacement Unit ☐ To Be Modified ☐ To be Replaced	4SLB	N/A
GEN3	Emergency Generator	Caterpillar	G3520H	TBD	3448 HP	3448 HP	TBD TBD	N/A GEN3	20200254	☑ Existing (unchanged) ☐ To be Removed ☐ New/Additional ☐ Replacement Unit ☐ To Be Modified ☐ To be Replaced	4SLB	N/A
GEN4	Emergency Generator	Caterpillar	G3520H	TBD	3448 HP	3448 HP	TBD TBD	N/A GEN4	20200254	☑ Existing (unchanged) ☐ To be Removed ☐ New/Additional ☐ Replacement Unit ☐ To Be Modified ☐ To be Replaced	4SLB	N/A
EOOSCOMP1-7	7 Electric Oil Overhead Stabilizer Compressors	Ariel	JGT/2	TBD	450 HP	450 HP	N/A N/A	N/A N/A	N/A	☑ Existing (unchanged) ☐ To be Removed ☐ New/Additional ☐ Replacement Unit ☐ To Be Modified ☐ To be Replaced	N/A	N/A
ECOSCOMP1-7	7 Electric Condenstate Overhead Stabilizer Compressors	Ariel	JGH/2	TBD	750 HP	750 HP	N/A N/A	N/A N/A	N/A	☑ Existing (unchanged) ☐ To be Removed ☐ New/Additional ☐ Replacement Unit ☐ To Be Modified ☐ To be Replaced	N/A	N/A
ERESCOMP1-18	18 Electric Residue Gas Compressors	Ariel	KBZ/6	TBD	6500 HP	6500 HP	N/A N/A	N/A N/A	N/A	☑ Existing (unchanged) ☐ To be Removed ☐ New/Additional ☐ Replacement Unit ☐ To Be Modified ☐ To be Replaced	N/A	N/A
CRYO1-4	4 Cryogenic Trains	N/A	N/A	N/A	N/A	N/A	N/A N/A	N/A N/A	N/A	☑ Existing (unchanged) ☐ To be Removed ☐ New/Additional ☐ Replacement Unit ☐ To Be Modified ☐ To be Replaced	N/A	N/A
MOL1-4	4 Molecular Sieve Dehydrators	N/A	N/A	N/A	N/A	N/A	N/A N/A	N/A N/A	N/A	☑ Existing (unchanged) ☐ To be Removed ☐ New/Additional ☐ Replacement Unit ☐ To Be Modified ☐ To be Replaced	N/A	N/A
Malfunction	Malfunction Emissions	N/A	N/A	N/A	N/A	N/A	N/A N/A	N/A N/A	31088811	☑ Existing (unchanged) ☐ To be Removed ☐ New/Additional ☐ Replacement Unit ☐ To Be Modified ☐ To be Replaced	N/A	N/A

[1] Unit numbers must correspond to unit numbers in the previous NOI unless a complete cross reference table of all units in both NOIs is provided.
[2] Specify dates required to determine regulatory applicability.
[3] To properly account for power conversion efficiencies, generator set rated capacity shall be reported as the rated capacity of the engine in horsepower, not the kilowatt capacity of the generator set.
[4] "4SLB" means four stroke lean burn engine, "4SRB" means four stroke rich burn engine, "2SLB" means two stroke lean burn engine, "CI" means compression ignition, and "SI" means spark ignition

Table 2-B: Insignificant Activities[1] (20.2.70 NMAC) OR Exempted Equipment (20.2.72 NMAC)

All 20.2.70 NMAC (Title V) applications must list all Insignificant Activities in this table. All 20.2.72 NMAC applications must list Exempted Equipment in this table. If equipment listed on this table is exempt under 20.2.72.202.B.5, include emissions calculations and emissions totals for 202.B.5 "similar functions" units, operations, and activities in Section 6, Calculations. Equipment and activities exempted under 20.2.72.202 NMAC may not necessarily be Insignificant under 20.2.70 NMAC (and vice versa). Unit & stack numbering must be consistent throughout the application package. Per Exemptions Policy 02-012.00 (see http://www.env.nm.gov/aqb/permit/aqb_pol.html), 20.2.72.202.B NMAC Exemptions do not apply, but 20.2.72.202.A NMAC exemptions do apply to NOI facilities under 20.2.73 NMAC. List 20.2.72.301.D.4 NMAC Auxiliary Equipment for Streamline applications in Table 2-A. The List of Insignificant Activities (for TV) can be found online at http://www.env.nm.gov/aqb/forms/InsignificantListTitleV.pdf . TV sources may elect to enter both TV Insignificant Activities and Part 72 Exemptions on this form.

Unit Number	Source Description	Manufacturer	Model No. / Serial No.	Max Capacity / Capacity Units	List Specific 20.2.72.202 NMAC Exemption (e.g. 20.2.72.202.B.5) / Insignificant Activity citation (e.g. IA List Item #1.a)	Date of Manufacture /Reconstruction[2] / Date of Installation /Construction[2]	For Each Piece of Equipment, Check Onc
FFT	1000 bbl Firefighting Foam Tank	TBD	N/A	N/A	20.2.72.202.B.5	TBD	☑ Existing (unchanged) ☐ To be Removed ☐ New/Additional ☐ Replacement Unit ☐ To Be Modified ☐ To be Replaced
			N/A	N/A	Units with PTE < 0.5 tpy	TBD	
48A	1000 bbl Raw Water Tank	TBD	N/A	N/A	20.2.72.202.B.5	TBD	☑ Existing (unchanged) ☐ To be Removed ☐ New/Additional ☐ Replacement Unit ☐ To Be Modified ☐ To be Replaced
			N/A	N/A	Units with PTE < 0.5 tpy	TBD	
48B	1000 bbl Raw Water Tank	TBD	N/A	N/A	20.2.72.202.B.5	TBD	☑ Existing (unchanged) ☐ To be Removed ☐ New/Additional ☐ Replacement Unit ☐ To Be Modified ☐ To be Replaced
			N/A	N/A	Units with PTE < 0.5 tpy	TBD	
49	1000 bbl Demineralized Water Tank	TBD	N/A	N/A	20.2.72.202.B.5	TBD	☑ Existing (unchanged) ☐ To be Removed ☐ New/Additional ☐ Replacement Unit ☐ To Be Modified ☐ To be Replaced
			N/A	N/A	Units with PTE < 0.5 tpy	TBD	
50	Amine Makeup Tank	TBD	N/A	N/A	20.2.72.202.B.5	TBD	☑ Existing (unchanged) ☐ To be Removed ☐ New/Additional ☐ Replacement Unit ☐ To Be Modified ☐ To be Replaced
			N/A	N/A	Units with PTE < 0.5 tpy	TBD	
51A	100 bbl Lube Oil Make-Up Tank	TBD	N/A	N/A	20.2.72.202.B.5	TBD	☑ Existing (unchanged) ☐ To be Removed ☐ New/Additional ☐ Replacement Unit ☐ To Be Modified ☐ To be Replaced
			N/A	N/A	Units with PTE < 0.5 tpy	TBD	
51B	100 bbl Lube Oil Make-Up Tank	TBD	N/A	N/A	20.2.72.202.B.5	TBD	☑ Existing (unchanged) ☐ To be Removed ☐ New/Additional ☐ Replacement Unit ☐ To Be Modified ☐ To be Replaced
			N/A	N/A	Units with PTE < 0.5 tpy	TBD	
55	Utility Water Tank	TBD	N/A	N/A	20.2.72.202.B.5	TBD	☑ Existing (unchanged) ☐ To be Removed ☐ New/Additional ☐ Replacement Unit ☐ To Be Modified ☐ To be Replaced
			N/A	N/A	Units with PTE < 0.5 tpy	TBD	
ROAD	Haul Road Fugitives	N/A	N/A	N/A	20.2.72.202.B.5	N/A	☑ Existing (unchanged) ☐ To be Removed ☐ New/Additional ☐ Replacement Unit ☐ To Be Modified ☐ To be Replaced
			N/A	N/A	Units with PTE < 0.5 tpy	N/A	
VTank01	Varsol Tank	TBD	N/A	N/A	20.2.72.202.B.5	TBD	☑ Existing (unchanged) ☐ To be Removed ☐ New/Additional ☐ Replacement Unit ☐ To Be Modified ☐ To be Replaced
			N/A	N/A	Units with PTE < 0.5 tpy	TBD	

[1] Insignificant activities exempted due to size or production rate are defined in 20.2.70.300.D.6, 20.2.70.7.Q NMAC, and the NMED/AQB List of Insignificant Activities, dated September 15, 2008. Emissions from these insignificant activities do not need to be reported, unless specifically requested.

[2] Specify date(s) required to determine regulatory applicability.

Table 2-C: Emissions Control Equipment

Unit and stack numbering must correspond throughout the application package. Only list control equipment for TAPs if the TAP's maximum uncontrolled emissions rate is over its respective threshold as listed in 20.2.72 NMAC, Subpart V, Tables A and B. In accordance with 20.2.72.203.A(3) and (8) NMAC, 20.2.70.300.D(5)(b) and (e) NMAC, and 20.2.73.200.B(7) NMAC, the permittee shall report all control devices and list each pollutant controlled by the control device regardless if the applicant takes credit for the reduction in emissions.

Control Equipment Unit No.	Control Equipment Description	Date Installed	Controlled Pollutant(s)	Controlling Emissions for Unit Number(s)[1]	Efficiency (% Control by Weight)	Method used to Estimate Efficiency
FL2	Flare 1	TBD	VOC, HAP	Plant Inlet & SSM Activities	98%	Mnf. Guarantee
FL1	Flare 2	TBD	VOC, HAP	Plant Inlet & SSM Activities	98%	Mnf. Guarantee
FL3	Flare 3	TBD	VOC, HAP	Plant Inlet & SSM Activities	98%	Mnf. Guarantee
ECD1	Combustor	TBD	VOC, HAP	GBS1, PWTK1-PWTK2, SOTK1,SOTL	99%	Mnf. Guarantee
TO1	Thermal Oxidizer	TBD	VOC, HAP	AU1	99%	Mnf. Guarantee
TO2	Thermal Oxidizer	TBD	VOC, HAP	AU2	99%	Mnf. Guarantee
TO3	Thermal Oxidizer	TBD	VOC, HAP	AU3	99%	Mnf. Guarantee
TO4	Thermal Oxidizer	TBD	VOC, HAP	AU4	99%	Mnf. Guarantee
SHTR7-CAT	SCR Catalytic Reduction	TBD	NOx	SHTR7-CAT	NO_x - 75%	Mnf. Guarantee
SHTR8-CAT	SCR Catalytic Reduction	TBD	NOx	SHTR8-CAT	NO_x - 75%	Mnf. Guarantee
CHTR3-CAT	SCR Catalytic Reduction	TBD	NOx	CHTR3-CAT	NO_x - 80%	Mnf. Guarantee
CHTR4-CAT	SCR Catalytic Reduction	TBD	NOx	CHTR4-CAT	NO_x - 80%	Mnf. Guarantee

[1] List each control device on a separate line. For each control device, list all emission units controlled by the control device.

Table 2-D: Maximum Emissions (under normal operating conditions)

Maximum Emissions are the emissions at maximum capacity and prior to (in the absence of) pollution control, emission-reducing process equipment, or any other emission reduction. Calculate the hourly emissions using the worst case hourly emissions for each pollutant. For each pollutant, calculate the annual emissions as if the facility were operating at maximum plant capacity without pollution controls for 8760 hours per year, unless otherwise approved by the Department. List Hazardous Air Pollutants (HAP) & Toxic Air Pollutants (TAPs) in Table 2-I. Unit & stack numbering must be consistent throughout the application package. Fill all cells in this table with the emission numbers or a "-" symbol. A "-" symbol indicates that emissions of this pollutant are not expected. Numbers shall be expressed to at least 2 decimal points (e.g. 0.41, 1.41, or 1.41E-4).

Unit No.	NOx		CO		VOC		SOx		PM[1]		PM10[2]		PM2.5[2]		H_2S		Lead	
	lb/hr	ton/yr	lb/hr	ton/yr	lb/hr	ton/yr	lb/hr	ton/yr	lb/hr	ton/yr	lb/hr	ton/yr	lb/hr	ton/yr	lb/hr	ton/yr	lb/hr	ton/yr
SHTR1	1.89	8.27	1.15	5.05	0.45	1.98	0.15	0.68	0.53	2.31	0.53	2.31	0.53	2.31	-	-	-	-
SHTR2	1.89	8.27	1.15	5.05	0.45	1.98	0.15	0.68	0.53	2.31	0.53	2.31	0.53	2.31	-	-	-	-
SHTR3	1.89	8.27	1.15	5.05	0.45	1.98	0.15	0.68	0.53	2.31	0.53	2.31	0.53	2.31	-	-	-	-
SHTR4	1.89	8.27	1.15	5.05	0.45	1.98	0.15	0.68	0.53	2.31	0.53	2.31	0.53	2.31	-	-	-	-
SHTR5	1.89	8.27	1.15	5.05	0.45	1.98	0.15	0.68	0.53	2.31	0.53	2.31	0.53	2.31	-	-	-	-
SHTR6	1.89	8.27	1.15	5.05	0.45	1.98	0.15	0.68	0.53	2.31	0.53	2.31	0.53	2.31	-	-	-	-
SHTR7	1.89	8.27	1.15	5.05	0.45	1.98	0.15	0.68	0.53	2.31	0.53	2.31	0.53	2.31	-	-	-	-
SHTR8	1.89	8.27	1.15	5.05	0.45	1.98	0.15	0.68	0.53	2.31	0.53	2.31	0.53	2.31	-	-	-	-
CHTR1	3.95	13.83	1.93	6.75	0.76	2.65	0.26	0.91	0.88	3.09	0.88	3.09	0.88	3.09	-	-	-	-
CHTR2	3.95	13.83	1.93	6.75	0.76	2.65	0.26	0.91	0.88	3.09	0.88	3.09	0.88	3.09	-	-	-	-
CHTR3	3.95	13.83	1.93	6.75	0.76	2.65	0.26	0.91	0.88	3.09	0.88	3.09	0.88	3.09	-	-	-	-
CHTR4	3.95	13.83	1.93	6.75	0.76	2.65	0.26	0.91	0.88	3.09	0.88	3.09	0.88	3.09	-	-	-	-
RHTR1	1.18	4.12	0.72	2.52	0.28	0.99	0.10	0.34	0.33	1.15	0.33	1.15	0.33	1.15	-	-	-	-
RHTR2	1.18	4.12	0.72	2.52	0.28	0.99	0.10	0.34	0.33	1.15	0.33	1.15	0.33	1.15	-	-	-	-
RHTR3	1.18	4.12	0.72	2.52	0.28	0.99	0.10	0.34	0.33	1.15	0.33	1.15	0.33	1.15	-	-	-	-
RHTR4	1.18	4.12	0.72	2.52	0.28	0.99	0.10	0.34	0.33	1.15	0.33	1.15	0.33	1.15	-	-	-	-
FL1-FL3[2]	1.79	7.85	3.58	15.67	2.87	12.55	0.23	0.99	0.097	0.42	0.097	0.42	0.097	0.42	-	-	-	-
FL1-FL3OVHD-SSM	Not operating during normal operating conditions																	
FL1-FL3CRYO-SSM	Not operating during normal operating conditions																	
Oil Storage Tanks 1-4 (Hourly VOC emissions)	--	--	--	--	4.16	--	--	--	--	--	--	--	--	--	-	-	-	-
Oil Storage Tanks 5-14 (Hourly VOC emissions)	--	--	--	--	9.33	--	--	--	--	--	--	--	--	--	-	-	-	-
IFR1-14 Annual VOC[3]	--	--	--	--	--	50.85	--	--	--	--	--	--	--	--	-	-	-	-

Table 2-D: Maximum Emissions (under normal operating conditions)

Maximum Emissions are the emissions at maximum capacity and prior to (in the absence of) pollution control, emission-reducing process equipment, or any other emission reduction. Calculate the hourly emissions using the worst case hourly emissions for each pollutant. For each pollutant, calculate the annual emissions as if the facility were operating at maximum plant capacity without pollution controls for 8760 hours per year, unless otherwise approved by the Department. List Hazardous Air Pollutants (HAP) & Toxic Air Pollutants (TAPs) in Table 2-I. Unit & stack numbering must be consistent throughout the application package. Fill all cells in this table with the emission numbers or a "-" symbol. A "-" symbol indicates that emissions of this pollutant are not expected. Numbers shall be expressed to at least 2 decimal points (e.g. 0.41, 1.41, or 1.41E-4).

Unit No.	NOx		CO		VOC		SOx		PM[1]		PM10[2]		PM2.5[2]		H_2S		Lead	
	lb/hr	ton/yr	lb/hr	ton/yr	lb/hr	ton/yr	lb/hr	ton/yr	lb/hr	ton/yr	lb/hr	ton/yr	lb/hr	ton/yr	lb/hr	ton/yr	lb/hr	ton/yr
ECD1[2]	0.03	0.13	0.06	0.25	0.06	0.28	0.00	0.00	0.00	0.0069	0.00	0.0069	0.00	0.0069	-	-	-	-
TO1[2]	0.28	1.22	0.17	0.74	0.30	1.31	0.00	0.00	0.15	0.65	0.15	0.65	0.15	0.65	-	-	-	-
TO2[2]	0.28	1.22	0.17	0.74	0.30	1.31	0.00	0.00	0.15	0.65	0.15	0.65	0.15	0.65	-	-	-	-
TO3[2]	0.28	1.22	0.17	0.74	0.30	1.31	0.00	0.00	0.15	0.65	0.15	0.65	0.15	0.65	-	-	-	-
TO4[2]	0.28	1.22	0.17	0.74	0.30	1.31	0.00	0.00	0.15	0.65	0.15	0.65	0.15	0.65	-	-	-	-
FUG	--	--	--	--	7.53	32.99	--	--	--	--	--	--	--	--	-	-	-	-
AU1	--	--	--	--	73.92	323.77	--	--	--	--	--	--	--	--	-	-	-	-
AU2	--	--	--	--	73.92	323.77	--	--	--	--	--	--	--	--	-	-	-	-
AU3	--	--	--	--	73.92	323.77	--	--	--	--	--	--	--	--	-	-	-	-
AU4	--	--	--	--	73.92	323.77	--	--	--	--	--	--	--	--	-	-	-	-
GBS1	--	--	--	--	15.80	69.21	--	--	--	--	--	--	--	--	-	-	-	-
PWTK1	--	--	--	--	2.68	11.75	--	--	--	--	--	--	--	--	-	-	-	-
PWTK2	--	--	--	--	2.68	11.75	--	--	--	--	--	--	--	--	-	-	-	-
SOTK1	--	--	--	--	57.70	252.73	--	--	--	--	--	--	--	--	-	-	-	-
SOTL	--	--	--	--	53.34	0.58	--	--	--	--	--	--	--	--	-	-	-	-
GEN1	3.80	0.19	14.29	0.71	5.11	0.26	0.044	0.00	0.20	0.010	0.20	0.010	0.20	0.010	-	-	-	-
GEN2	3.80	0.19	14.29	0.71	5.11	0.26	0.044	0.00	0.20	0.010	0.20	0.010	0.20	0.010	-	-	-	-
GEN3	3.80	0.19	14.29	0.71	5.11	0.26	0.044	0.00	0.20	0.010	0.20	0.010	0.20	0.010	-	-	-	-
GEN4	3.80	0.19	14.29	0.71	5.11	0.26	0.044	0.00	0.20	0.010	0.20	0.010	0.20	0.010	-	-	-	-
Malfunction	--	--	--	--	--	10.00	--	--	--	--	--	--	--	--	-	-	-	-
Totals	53.74	151.60	81.28	99.21	481.24	1784.39	3.05	11.49	10.56	38.49	10.56	38.49	10.56	38.49	-	-	-	-

[1]**Condensable Particulate Matter:** Include condensable particulate matter emissions for PM10 and PM2.5 if the source is a combustion source. Do not include condensable particulate matter for PM unless PM is set equal to PM10 and PM2.5. Particulate matter (PM) is not subject to an ambient air quality standard, but PM is a regulated air pollutant under PSD (20.2.74 NMAC) and Title V (20.2.70 NMAC).

[2]Only includes pilot/purge gas/assist gas emissions, other emissions not considered normal operating conditions.

[3]Annual VOC emissions are grouped together for IFR1 - IFR14. Worst-case annual withdrawl lossess were calculated by assuming total site throughput for each size group of IFR storage tanks and selecting the higher value to include in the total annual VOC emissions.

Table 2-E: Requested Allowable Emissions

Unit & stack numbering must be consistent throughout the application package. Fill all cells in this table with the emission numbers or a "-" symbol. A "-" symbol indicates that emissions of this pollutant are not expected. Numbers shall be expressed to at least 2 decimal points (e.g. 0.41, 1.41, or $1.41E^{-4}$).

Unit No.	NOx		CO		VOC		SOx		PM[1]		PM10[1]		PM2.5[1]		H_2S		Lead	
	lb/hr	ton/yr	lb/hr	ton/yr	lb/hr	ton/yr	lb/hr	ton/yr	lb/hr	ton/yr	lb/hr	ton/yr	lb/hr	ton/yr	lb/hr	ton/yr	lb/hr	ton/yr
SHTR1	1.89	8.27	1.15	5.05	0.45	1.98	0.15	0.68	0.53	2.31	0.53	2.31	0.53	2.31	-	-	-	-
SHTR2	1.89	8.27	1.15	5.05	0.45	1.98	0.16	0.68	0.53	2.31	0.53	2.31	0.53	2.31	-	-	-	-
SHTR3	1.89	8.27	1.15	5.05	0.45	1.98	0.16	0.68	0.53	2.31	0.53	2.31	0.53	2.31	-	-	-	-
SHTR4	1.97	6.89	1.20	4.21	0.47	1.65	0.16	0.57	0.55	1.92	0.55	1.92	0.55	1.92	-	-	-	-
SHTR5	1.97	6.89	1.20	4.21	0.47	1.65	0.16	0.57	0.55	1.92	0.55	1.92	0.55	1.92	-	-	-	-
SHTR6	1.97	6.89	1.20	4.21	0.47	1.65	0.16	0.57	0.55	1.92	0.55	1.92	0.55	1.92	-	-	-	-
SHTR7	0.49	1.73	1.20	4.21	0.47	1.65	0.16	0.57	0.55	1.92	0.55	1.92	0.55	1.92	-	-	-	-
SHTR8	0.49	1.73	1.20	4.21	0.47	1.65	0.16	0.57	0.55	1.92	0.55	1.92	0.55	1.92	-	-	-	-
CHTR1	3.95	13.83	1.93	6.75	0.76	2.65	0.26	0.91	0.88	3.09	0.88	3.09	0.88	3.09	-	-	-	-
CHTR2	3.95	13.83	1.93	6.75	0.76	2.65	0.26	0.91	0.88	3.09	0.88	3.09	0.88	3.09	-	-	-	-
CHTR3	0.79	2.77	1.93	6.75	0.76	2.65	0.26	0.91	0.88	3.09	0.88	3.09	0.88	3.09	-	-	-	-
CHTR4	0.79	2.77	1.93	6.75	0.76	2.65	0.26	0.91	0.88	3.09	0.88	3.09	0.88	3.09	-	-	-	-
RHTR1	1.18	4.12	0.72	2.52	0.28	0.99	0.10	0.34	0.33	1.15	0.33	1.15	0.33	1.15	-	-	-	-
RHTR2	1.18	4.12	0.72	2.52	0.28	0.99	0.10	0.34	0.33	1.15	0.33	1.15	0.33	1.15	-	-	-	-
RHTR3	1.18	4.12	0.72	2.52	0.28	0.99	0.10	0.34	0.33	1.15	0.33	1.15	0.33	1.15	-	-	-	-
RHTR4	1.18	4.12	0.72	2.52	0.28	0.99	0.10	0.34	0.33	1.15	0.33	1.15	0.33	1.15	-	-	-	-
FL1-FL3	1.79	7.85	3.58	15.67	2.87	12.55	0.23	0.99	0.097	0.42	0.097	0.42	0.097	0.42				
Oil Storage Tanks 1-4 (Hourly VOC emissions)	--	--	--	--	4.16	--	--	--	--	--	--	--	--	--	-	-	-	-
Oil Storage Tanks 5-14 (Hourly VOC emissions)	--	--	--	--	9.33	--	--	--	--	--	--	--	--	--	-	-	-	-
IFR1-14 Annual VOC[3]	--	--	--	--	--	50.85	--	--	--	--	--	--	--	--	-	-	-	-

Table 2-E: Requested Allowable Emissions

Unit & stack numbering must be consistent throughout the application package. Fill all cells in this table with the emission numbers or a "-" symbol. A "-" symbol indicates that emissions of this pollutant are not expected. Numbers shall be expressed to at least 2 decimal points (e.g. 0.41, 1.41, or $1.41E^{-4}$).

Unit No.	NOx		CO		VOC		SOx		PM[1]		PM10[1]		PM2.5[1]		H_2S		Lead	
	lb/hr	ton/yr	lb/hr	ton/yr	lb/hr	ton/yr	lb/hr	ton/yr	lb/hr	ton/yr	lb/hr	ton/yr	lb/hr	ton/yr	lb/hr	ton/yr	lb/hr	ton/yr
ECD1	0.44	1.17	0.88	2.34	1.38	3.74	0.00	0.00	0.024	0.028	0.024	0.028	0.024	0.028	-	-	-	-
TO1	3.56	15.59	2.17	9.49	0.72	3.24	0.88	3.87	0.19	0.82	0.19	0.82	0.19	0.82	-	-	-	-
TO2	3.56	15.59	2.17	9.49	0.72	3.24	0.88	3.87	0.19	0.82	0.19	0.82	0.19	0.82	-	-	-	-
TO3	3.56	15.59	2.17	9.49	0.72	3.24	0.88	3.87	0.19	0.82	0.19	0.82	0.19	0.82	-	-	-	-
TO4	3.56	15.59	2.17	9.49	0.72	3.24	0.88	3.87	0.19	0.82	0.19	0.82	0.19	0.82	-	-	-	-
FUG	--	--	--	--	7.53	32.99	--	--	--	--	--	--	--	--	-	-	-	-
AU1	Emissions are represented at TO1																	
AU2	Emissions are represented at TO2																	
AU3	Emissions are represented at TO3																	
AU4	Emissions are represented at TO4																	
GBS1	Emissions are represented at ECD1																	
PWTK1	Emissions are represented at ECD1																	
PWTK2	Emissions are represented at ECD1																	
SOTK1	Emissions are represented at ECD1																	
SOTL	--	--	--	--	0.69	0.01	--	--	--	--	--	--	--	--	-	-	-	-
GEN1	3.80	0.19	14.29	0.71	5.11	0.26	0.044	0.0022	0.20	0.010	0.20	0.010	0.20	0.010	-	-	-	-
GEN2	3.80	0.19	14.29	0.71	5.11	0.26	0.044	0.0022	0.20	0.010	0.20	0.010	0.20	0.010	-	-	-	-
GEN3	3.80	0.19	14.29	0.71	5.11	0.26	0.044	0.0022	0.20	0.010	0.20	0.010	0.20	0.010	-	-	-	-
GEN4	3.80	0.19	14.29	0.71	5.11	0.26	0.044	0.0022	0.20	0.010	0.20	0.010	0.20	0.010	-	-	-	-
Malfunction	--	--	--	--	--	10.00	--	--	--	--	--	--	--	--	-	-	-	-
Totals	58.41	170.79	90.33	132.07	57.16	152.87	6.64	26.38	10.84	37.24	10.84	37.24	10.84	37.24	-	-	-	-

[1] **Condensable Particulate Matter:** Include condensable particulate matter emissions for PM10 and PM2.5 if the source is a combustion source. Do not include condensable particulate matter for PM unless PM is set equal to PM10 and PM2.5. Particulate matter (PM) is not subject to an ambient air quality standard, but it is a regulated air pollutant under PSD (20.2.74 NMAC) and Title V (20.2.70 NMAC).

[2] For all pollutants except VOC/HAP, the hourly emission rate excludes the generators and overhead SSM stream as they cannot occur at the same time and the cryo SSM stream has a higher emission rate. For VOC, the overhead SSM stream is included with the highest hourly rate. For HAP, the generators have the highest hourly rate.

[3] Annual VOC emissions are grouped together for IFR1 - IFR14. Worst-case annual withdrawl lossess were calculated by assuming total site throughput for each size group of IFR storage tanks and selecting the higher value to include in the total annual VOC emissions.

Table 2-F: Additional Emissions during Startup, Shutdown, and Routine Maintenance (SSM)

☐ This table is intentionally left blank since all emissions at this facility due to routine or predictable startup, shutdown, or scehduled maintenance are no higher than those listed in Table 2-E and a malfunction emission limit is not already permitted or requested. If you are required to report GHG emissions as described in Section 6a, include any GHG emissions during Startup, Shutdown, and/or Scheduled Maintenance (SSM) in Table 2-P. Provide an explanations of SSM emissions in Section 6 and 6a.

All applications for facilities that have emissions during routine our predictable startup, shutdown or scheduled maintenance (SSM)[1], including NOI applications, must include in this table the Maximum Emissions during routine or predictable startup, shutdown and scheduled maintenance (20.2.7 NMAC, 20.2.72.203.A.3 NMAC, 20.2.73.200.D.2 NMAC). In Section 6 and 6a, provide emissions calculations for all SSM emissions reported in this table. Refer to "Guidance for Submittal of Startup, Shutdown, Maintenance Emissions in Permit Applications (https://www.env.nm.gov/aqb/permit/aqb_pol.html) for more detailed instructions. Numbers shall be expressed to at least 2 decimal points (e.g. 0.41, 1.41, or 1.41E-4).

Unit No.	NOx		CO		VOC		SOx		PM[2]		PM10[2]		PM2.5[2]		H_2S		Lead	
	lb/hr	ton/yr	lb/hr	ton/yr	lb/hr	ton/yr	lb/hr	ton/yr	lb/hr	ton/yr	lb/hr	ton/yr	lb/hr	ton/yr	lb/hr	ton/yr	lb/hr	ton/yr
SSM	--	--	--	--	--	10.00	--	--	--	--	--	--	--	--	--	--	--	--
FL1-FL3OVHD-SSM	165.59	3.31	330.57	6.61	1,093.54	21.87	0.00	0.00	8.94	0.18	8.94	0.18	8.94	0.18	--	--	--	--
FL1-FL3CRYO-SSM	323.31	6.47	645.44	12.91	517.03	10.34	0.00	0.00	54.81	1.10	54.81	1.10	54.81	1.10	--	--	--	--
Totals	488.90	9.78	976.02	19.52	1610.57	42.21	0.00	0.00	63.75	1.28	63.75	1.28	63.75	1.28	-	-	-	-

[1] **For instance**, if the short term steady-state Table 2-E emissions are 5 lb/hr and the SSM rate is 12 lb/hr, enter 7 lb/hr in this table. If the annual steady-state Table 2-E emissions are 21.9 TPY, and the number of scheduled SSM events result in annual emissions of 31.9 TPY, enter 10.0 TPY in the table below.

[2] **Condensable Particulate Matter:** Include condensable particulate matter emissions for PM10 and PM2.5 if the source is a combustion source. Do not include condensable particulate matter for PM unless PM is set equal to PM10 and PM2.5. Particulate matter (PM) is not subject to an ambient air quality standard, but it is a regulated air pollutant under PSD (20.2.74 NMAC) and Title V (20.2.70 NMAC).

Table 2-G: Stack Exit and Fugitive Emission Rates for Special Stacks

☑ I have elected to leave this table blank because this facility does not have any stacks/vents that split emissions from a single source or combine emissions from more than one source listed in table 2-A. Additionally, the emission rates of all stacks match the Requested allowable emission rates stated in Table 2-E.

Use this table to list stack emissions (requested allowable) from split and combined stacks. List Toxic Air Pollutants (TAPs) and Hazardous Air Pollutants (HAPs) in Table 2-I. List all fugitives that are associated with the normal, routine, and non-emergency operation of the facility. Unit and stack numbering must correspond throughout the application package. Refer to Table 2-E for instructions on use of the "-" symbol and on significant figures.

Stack No.	Serving Unit Number(s) from Table 2-A	NOx		CO		VOC		SOx		PM		PM10		PM2.5		☐ H_2S or ☐ Lead	
		lb/hr	ton/yr	lb/hr	ton/yr	lb/hr	ton/yr	lb/hr	ton/yr	lb/hr	ton/yr	lb/hr	ton/yr	lb/hr	ton/yr	lb/hr	ton/yr
N/A - This facility does not have Special Stacks																	
Totals:																	

Table 2-H: Stack Exit Conditions

Unit and stack numbering must correspond throughout the application package. Include the stack exit conditions for each unit that emits from a stack, including blowdown venting parameters and tank emissions.

Stack Number	Serving Unit Number(s) from Table 2-A	Orientation (H-Horizontal V=Vertical)	Rain Caps (Yes or No)	Height Above Ground (ft)	Temp. (F)	Flow Rate		Moisture by Volume (%)	Velocity (ft/sec)	Inside Diameter (ft)
						(acfs)	(dscfs)			
SHTR1	SHTR1	V	No	33.0	488	441	NA	0	35.1	4.0
SHTR2	SHTR2	V	No	33.0	488	441	NA	0	35.1	4.0
SHTR3	SHTR3	V	No	33.0	488	441	NA	0	35.1	4.0
SHTR4	SHTR4	V	No	33.0	488	441	NA	0	35.1	4.0
SHTR5	SHTR5	V	No	33.0	488	441	NA	0	35.1	4.0
SHTR6	SHTR6	V	No	33.0	488	441	NA	0	35.1	4.0
SHTR7	SHTR7	V	No	33.0	488	441	NA	0	35.1	4.0
SHTR8	SHTR8	V	No	33.0	488	441	NA	0	35.1	4.0
CHTR1	CHTR1	V	No	76.9	599	820	NA	0	65.3	4.0
CHTR2	CHTR2	V	No	76.9	599	820	NA	0	65.3	4.0
CHTR3	CHTR3	V	No	76.9	599	820	NA	0	65.3	4.0
CHTR4	CHTR4	V	No	76.9	599	820	NA	0	65.3	4.0
RHTR1	RHTR1	V	No	28.7	470	292	NA	0	52.3	2.7
RHTR2	RHTR2	V	No	28.7	470	292	NA	0	52.3	2.7
RHTR3	RHTR3	V	No	28.7	470	292	NA	0	52.3	2.7
RHTR4	RHTR4	V	No	28.7	470	292	NA	0	52.3	2.7
FL2	FL2	V	No	130.0	1832	139	NA	0	65.6	0.4
FL1	FL1	V	No	170.0	1832	139	NA	0	65.6	0.7
FL3	FL3	V	No	170.0	1832	139	NA	0	65.6	0.7

Table 2-H: Stack Exit Conditions

Unit and stack numbering must correspond throughout the application package. Include the stack exit conditions for each unit that emits from a stack, including blowdown venting parameters and tank emissions.

Stack Number	Serving Unit Number(s) from Table 2-A	Orientation (H-Horizontal V=Vertical)	Rain Caps (Yes or No)	Height Above Ground (ft)	Temp. (F)	Flow Rate		Moisture by Volume (%)	Velocity (ft/sec)	Inside Diameter (ft)
						(acfs)	(dscfs)			
ECD1	ECD1	V	No	40.0	1450	529	NA	0	39.5	8.4
TO1	TO1	V	No	58.0	1700	782.5	NA	0	58.6	4.1
TO2	TO2	V	No	58.0	1700	782.5	NA	0	58.6	4.1
TO3	TO3	V	No	58.0	1700	782.5	NA	0	58.6	4.1
TO4	TO4	V	No	58.0	1700	782.5	NA	0	58.6	4.1
GEN1	GEN1	V	No	14.0	736	260.3	NA	0	331.4	1.0
GEN2	GEN2	V	No	14.0	736	260.3	NA	0	331.4	1.0
GEN3	GEN3	V	No	14.0	736	260.3	NA	0	331.4	1.0
GEN4	GEN4	V	No	14.0	736	260.3	NA	0	331.4	1.0

Table 2-I: Stack Exit and Fugitive Emission Rates for HAPs and TAPs

In the table below, report the Potential to Emit for each HAP from each regulated emission unit listed in Table 2-A, only if the entire facility emits the HAP at a rate greater than or equal to one (1) ton per year For each such emission unit, HAPs shall be reported to the nearest 0.1 tpy. Each facility-wide Individual HAP total and the facility-wide Total HAPs shall be the sum of all HAP sources calculated to the nearest 0.1 ton per year. Per 20.2.72.403.A.1 NMAC, facilities not exempt [see 20.2.72.402.C NMAC] from TAP permitting shall report each TAP that has an uncontrolled emission rate in excess of its pounds per hour screening level specified in 20.2.72.502 NMAC. TAPs shall be reported using one more significant figure than the number of significant figures shown in the pound per hour threshold corresponding to the substance. Use the HAP nomenclature as it appears in Section 112 (b) of the 1990 CAAA and the TAP nomenclature as it listed in 20.2.72.502 NMAC. Include tank-flashing emissions estimates of HAPs in this table. For each HAP or TAP listed, fill all cells in this table with the emission numbers or a "-" symbol. A "-" symbol indicates that emissions of this pollutant are not expected or the pollutant is emitted in a quantity less than the threshold amounts described above.

Stack No.	Unit No.(s)	Total HAPs		n-Hexane ☑ HAP or ☐ TAP		Benzene ☑ HAP or ☐ TAP		Toluene ☑ HAP or ☐ TAP		Ethylbenzene ☑ HAP or ☐ TAP		Xylene ☑ HAP or ☐ TAP		Formaldehyde ☑ HAP or ☐ TAP		H2SO4 ☐ HAP or ☑ TAP		Ammonia ☐ HAP or ☑ TAP		Provide Pollutant Name Here ☐ HAP or ☐ TAP	
		lb/hr	ton/yr	lb/hr	ton/yr	lb/hr	ton/yr	lb/hr	ton/yr	lb/hr	ton/yr	lb/hr	ton/yr	lb/hr	ton/yr	lb/hr	ton/yr	lb/hr	ton/yr	lb/hr	ton/yr
SHTR1	SHTR1	0.1	0.6	0.1	0.5	0.0001	0.001	0.0002	0.001	--	--	--	--	0.01	0.02	--	--	--	--		
SHTR2	SHTR2	0.1	0.6	0.1	0.5	0.0001	0.001	0.0002	0.001	--	--	--	--	0.01	0.02	--	--	--	--		
SHTR3	SHTR3	0.1	0.6	0.1	0.5	0.0001	0.001	0.0002	0.001	--	--	--	--	0.01	0.02	--	--	--	--		
SHTR4	SHTR4	0.03	0.1	0.03	0.1	0.0001	0.001	0.0002	0.001	--	--	--	--	0.004	0.02	--	--	--	--		
SHTR5	SHTR5	0.03	0.1	0.03	0.1	0.0001	0.001	0.0002	0.001	--	--	--	--	0.004	0.02	--	--	--	--		
SHTR6	SHTR6	0.03	0.1	0.03	0.1	0.0001	0.001	0.0002	0.001	--	--	--	--	0.004	0.02	--	--	--	--		
SHTR7	SHTR7	0.03	0.1	0.03	0.1	0.0001	0.001	0.0002	0.001	--	--	--	--	0.004	0.02	--	--	--	--		
SHTR8	SHTR8	0.03	0.1	0.03	0.1	0.0001	0.001	0.0002	0.001	--	--	--	--	0.004	0.02	--	--	--	--		
CHTR1	CHTR1	0.05	0.2	0.04	0.2	0.0002	0.001	0.0003	0.001	--	--	--	--	0.01	0.03	--	--	--	--		
CHTR2	CHTR2	0.05	0.2	0.04	0.2	0.0002	0.001	0.0003	0.001	--	--	--	--	0.01	0.03	--	--	--	--		
CHTR3	CHTR3	0.05	0.2	0.04	0.2	0.0002	0.001	0.0003	0.001	--	--	--	--	0.01	0.03	--	--	--	--		
CHTR4	CHTR4	0.05	0.2	0.04	0.2	0.0002	0.001	0.0003	0.001	--	--	--	--	0.01	0.03	--	--	--	--		
RHTR1	RHTR1	0.02	0.1	0.02	0.1	0.0001	0.0003	0.0001	0.001	--	--	--	--	0.003	0.01	--	--	--	--		
RHTR2	RHTR2	0.02	0.1	0.02	0.1	0.0001	0.0003	0.0001	0.001	--	--	--	--	0.003	0.01	--	--	--	--		
RHTR3	RHTR3	0.02	0.1	0.02	0.1	0.0001	0.0003	0.0001	0.001	--	--	--	--	0.003	0.01	--	--	--	--		
RHTR4	RHTR4	0.02	0.1	0.02	0.1	0.0001	0.0003	0.0001	0.001	--	--	--	--	0.003	0.01	--	--	--	--		
FL1-FL3[1]	FL1-FL3[1]	0.02	0.1	0.01	0.03	0.001	0.004	--	--	--	--	--	--	--	--	--	--	--	--		
FL1-FL3[1]	FL1-FL3OVHD-SSM	15.7	0.3	6.8	0.1	5.1	0.1	3.2	0.06	--	--	0.6	0.01	--	--	--	--	--	--		
FL1-FL3[1]	FL1-FL3CRYO-SSM	1.6	0.03	1.5	0.03	0.2	0.003	--	--	--	--	--	--	--	--	--	--	--	--		

Table 2-I: Stack Exit and Fugitive Emission Rates for HAPs and TAPs

In the table below, report the Potential to Emit for each HAP from each regulated emission unit listed in Table 2-A, only if the entire facility emits the HAP at a rate greater than or equal to one (1) ton per year For each such emission unit, HAPs shall be reported to the nearest 0.1 tpy. Each facility-wide Individual HAP total and the facility-wide Total HAPs shall be the sum of all HAP sources calculated to the nearest 0.1 ton per year. Per 20.2.72.403.A.1 NMAC, facilities not exempt [see 20.2.72.402.C NMAC] from TAP permitting shall report each TAP that has an uncontrolled emission rate in excess of its pounds per hour screening level specified in 20.2.72.502 NMAC. TAPs shall be reported using one more significant figure than the number of significant figures shown in the pound per hour threshold corresponding to the substance. Use the HAP nomenclature as it appears in Section 112 (b) of the 1990 CAAA and the TAP nomenclature as it listed in 20.2.72.502 NMAC. Include tank-flashing emissions estimates of HAPs in this table. For each HAP or TAP listed, fill all cells in this table with the emission numbers or a "-" symbol. A "-" symbol indicates that emissions of this pollutant are not expected or the pollutant is emitted in a quantity less than the threshold amounts described above.

Stack No.	Unit No.(s)	Total HAPs		n-Hexane ☑ HAP or ☐ TAP		Benzene ☑ HAP or ☐ TAP		Toluene ☑ HAP or ☐ TAP		Ethylbenzene ☑ HAP or ☐ TAP		Xylene ☑ HAP or ☐ TAP		Formaldehyde ☑ HAP or ☐ TAP		H2SO4 ☐ HAP or ☑ TAP		Ammonia ☐ HAP or ☑ TAP		Provide Pollutant Name Here ☐ HAP or ☐ TAP	
		lb/hr	ton/yr	lb/hr	ton/yr	lb/hr	ton/yr	lb/hr	ton/yr	lb/hr	ton/yr	lb/hr	ton/yr	lb/hr	ton/yr	lb/hr	ton/yr	lb/hr	ton/yr	lb/hr	ton/yr
Oil Storage Tanks 1-4	IFR 1-4	0.2	1.0	0.1	0.3	0.04	0.2	0.1	0.3	0.003	0.01	0.04	0.2	--	--	--	--	--	--		
Oil Storage Tanks 5-14	IFR 5-14	0.4	1.7	0.2	0.8	0.1	0.4	0.1	0.3	0.003	0.01	0.04	0.2	--	--	--	--	--	--		
ECD1	ECD1	0.05	0.1	0.03	0.1	0.01	0.03	0.01	0.03	0.0002	0.001	0.002	0.01	--	--	--	--	--	--		
TO1	TO1	0.02	0.1	0.004	0.02	0.004	0.02	0.004	0.02	0.004	0.02	0.004	0.02	--	--	--	--	--	--		
TO2	TO2	0.02	0.1	0.004	0.02	0.004	0.02	0.004	0.02	0.004	0.02	0.004	0.02	--	--	--	--	--	--		
TO3	TO3	0.02	0.1	0.004	0.02	0.004	0.02	0.004	0.02	0.004	0.02	0.004	0.02	--	--	--	--	--	--		
TO4	TO4	0.02	0.1	0.004	0.02	0.004	0.02	0.004	0.02	0.004	0.02	0.004	0.02	--	--	--	--	--	--		
FUG	FUG	0.7	2.9	0.2	1.1	0.1	0.2	0.1	0.6	0.03	0.15	0.2	0.8	--	--	--	--	--	--		
SSM	SSM	--	--	--	--	--	--	--	--	--	--	--	--	--	--	--	--	--	--		
TO1	AU1	Emissions are represented at TO1.																			
TO2	AU2	Emissions are represented at TO2.																			
TO3	AU3	Emissions are represented at TO3.																			
TO4	AU4	Emissions are represented at TO4.																			
ECD1	GBS1	Emissions are represented at ECD1.																			
ECD1	PWTK1	Emissions are represented at ECD1.																			
ECD1	PWTK2	Emissions are represented at ECD1.																			
ECD1	SOTK1	Emissions are represented at ECD1.																			
ECD1	SOTL	0.02	0.00	0.01	0.0001	--	--	--	--	--	--	--	--	--	--	--	--	--	--		
GEN1	GEN1	2.2	0.1	0.02	0.001	--	--	--	--	--	--	--	--	2.0	0.1	--	--	--	--		
GEN2	GEN2	2.2	0.1	0.02	0.001	--	--	--	--	--	--	--	--	2.0	0.1	--	--	--	--		
GEN3	GEN3	2.2	0.1	0.02	0.001	--	--	--	--	--	--	--	--	2.0	0.1	--	--	--	--		
GEN4	GEN4	2.2	0.1	0.02	0.001	--	--	--	--	--	--	--	--	2.0	0.1	--	--	--	--		
Totals:		28.2	10.4	9.7	5.8	5.5	1.0	3.5	1.4	0.1	0.2	0.8	1.2	8.0	0.7	--	--	--	--		

Table 2-J: Fuel

Specify fuel characteristics and usage. Unit and stack numbering must correspond throughout the application package.

Unit No.	Fuel Type (low sulfur Diesel, ultra low sulfur diesel, Natural Gas, Coal, …)	Fuel Source: purchased commercial, pipeline quality natural gas, residue gas, raw/field natural gas, process gas (e.g. SRU tail gas) or other	Specify Units				
			Lower Heating Value (Btu/scf)	Hourly Usage (scf)	Annual Usage (mmscf)	% Sulfur (by weight)	% Ash
SHTR1	Natural Gas	Field Gas	993.0	59345.4	519.9	< 0.0001	N/A
SHTR2	Natural Gas	Field Gas	993.0	59345.4	519.9	< 0.0001	N/A
SHTR3	Natural Gas	Field Gas	993.0	59345.4	519.9	< 0.0001	N/A
SHTR4	Natural Gas	Field Gas	993.0	59345.4	519.9	< 0.0001	N/A
SHTR5	Natural Gas	Field Gas	993.0	59345.4	519.9	< 0.0001	N/A
SHTR6	Natural Gas	Field Gas	993.0	59345.4	519.9	< 0.0001	N/A
SHTR7	Natural Gas	Field Gas	993.0	59345.4	519.9	< 0.0001	N/A
SHTR8	Natural Gas	Field Gas	993.0	59345.4	519.9	< 0.0001	N/A
CHTR1	Natural Gas	Field Gas	993.0	95206.4	834.0	< 0.0001	N/A
CHTR2	Natural Gas	Field Gas	993.0	95206.4	834.0	< 0.0001	N/A
CHTR3	Natural Gas	Field Gas	993.0	95206.4	834.0	< 0.0001	N/A
CHTR4	Natural Gas	Field Gas	993.0	95206.4	834.0	< 0.0001	N/A
RHTR1	Natural Gas	Field Gas	993.0	35498.5	311.0	< 0.0001	N/A
RHTR2	Natural Gas	Field Gas	993.0	35498.5	311.0	< 0.0001	N/A
RHTR3	Natural Gas	Field Gas	993.0	35498.5	311.0	< 0.0001	N/A
RHTR4	Natural Gas	Field Gas	993.0	35498.5	311.0	< 0.0001	N/A
FL1	Natural Gas	Field Gas	1171.4	35498.5	311.0	< 0.0001	N/A
FL2	Natural Gas	Field Gas	1171.4	35498.5	311.0	< 0.0001	N/A
FL3	Natural Gas	Field Gas	1171.4	35498.5	311.0	< 0.0001	N/A
GEN1	Natural Gas	Field Gas	1001.0	24586.3	215.4	< 0.0001	N/A
GEN2	Natural Gas	Field Gas	1001.0	24586.3	215.4	< 0.0001	N/A
GEN3	Natural Gas	Field Gas	1001.0	24586.3	215.4	< 0.0001	N/A
GEN4	Natural Gas	Field Gas	1001.0	24586.3	215.4	< 0.0001	N/A

Table 2-K: Liquid Data for Tanks Listed in Table 2-L

For each tank, list the liquid(s) to be stored in each tank. If it is expected that a tank may store a variety of hydrocarbon liquids, enter "mixed hydrocarbons" in the Composition column for that tank and enter the corresponding data of the most volatile liquid to be stored in the tank. If tank is to be used for storage of different materials, list all the materials in the "All Calculations" attachment, run the newest version of TANKS on each, and use the material with the highest emission rate to determine maximum uncontrolled and requested allowable emissions rate. The permit will specify the most volatile category of liquids that may be stored in each tank. Include appropriate tank-flashing modeling input data. Use additional sheets if necessary. Unit and stack numbering must correspond throughout the application package.

Tank No.	SCC Code	Material Name	Composition	Liquid Density (lb/gal)	Vapor Molecular Weight (lb/lb*mol)	Average Storage Conditions		Max Storage Conditions	
						Temperature (°F)	True Vapor Pressure (psia)	Temperature (°F)	True Vapor Pressure (psia)
IFR1	40400331	Oil/Condensate	Oil/Condensate	6.57	58.42	91.20	8.96	100.21	10.02
IFR2	40400331	Oil/Condensate	Oil/Condensate	6.57	58.42	91.20	8.96	100.21	10.02
IFR3	40400331	Oil/Condensate	Oil/Condensate	6.57	58.42	91.20	8.96	100.21	10.02
IFR4	40400331	Oil/Condensate	Oil/Condensate	6.57	58.42	91.20	8.96	100.21	10.02
IFR5	40400331	Oil/Condensate	Oil/Condensate	6.57	59.05	91.47	9.00	100.46	10.05
IFR6	40400331	Oil/Condensate	Oil/Condensate	6.57	59.05	91.47	9.00	100.46	10.05
IFR7	40400331	Oil/Condensate	Oil/Condensate	6.57	59.05	91.47	9.00	100.46	10.05
IFR8	40400331	Oil/Condensate	Oil/Condensate	6.57	59.05	91.47	9.00	100.46	10.05
IFR9	40400331	Oil/Condensate	Oil/Condensate	6.57	59.05	91.47	9.00	100.46	10.05
IFR10	40400331	Oil/Condensate	Oil/Condensate	6.57	59.05	91.47	9.00	100.46	10.05
IFR11	40400331	Oil/Condensate	Oil/Condensate	6.57	59.05	91.47	9.00	100.46	10.05
IFR12	40400331	Oil/Condensate	Oil/Condensate	6.57	59.05	91.47	9.00	100.46	10.05
IFR13	40400331	Oil/Condensate	Oil/Condensate	6.57	59.05	91.47	9.00	100.46	10.05
IFR14	40400331	Oil/Condensate	Oil/Condensate	6.57	59.05	91.47	9.00	100.46	10.05
GBS1	31000506	Produced Water	Produced Water w/ Trace Oils	8.30	55.60	86.50	0.63	95.80	0.85
PWTK1	40400315	Produced Water	Produced Water w/ Trace Oils	8.30	55.60	81.25	11.74	90.51	13.20
PWTK2	40400315	Produced Water	Produced Water w/ Trace Oils	8.30	55.60	81.25	11.74	90.51	13.20
SOTK1	40400311	Oil/Condensate	Oil/Condensate	6.60	54.81	53.32	6.55	62.62	7.72

Table 2-L: Tank Data

Include appropriate tank-flashing modeling input data. Use an addendum to this table for unlisted data categories. Unit and stack numbering must correspond throughout the application package. Use additional sheets if necessary. See reference Table 2-L2. Note: 1.00 bbl = 10.159 M3 = 42.0 gal

Tank No.	Date Installed	Materials Stored	Seal Type (refer to Table 2-LR below)	Roof Type (refer to Table 2-LR below)	Capacity		Diameter (M)	Vapor Space (M)	Color (from Table VI-C)		Paint Condition (from Table VI-C)	Annual Throughput (gal/yr)	Turn-overs (per year)
					(bbl)	(M^3)			Roof	Shell			
IFR1	TBD	Oil/Condensate	C	IF	50,000	7,949	30.5	13.4	Tan	Tan	Good	2,299,500,000	1095
IFR2	TBD	Oil/Condensate	C	IF	50,000	7,949	30.5	13.4	Tan	Tan	Good	2,299,500,000	1095
IFR3	TBD	Oil/Condensate	C	IF	50,000	7,949	30.5	13.4	Tan	Tan	Good	2,299,500,000	1095
IFR4	TBD	Oil/Condensate	C	IF	50,000	7,949	30.5	13.4	Tan	Tan	Good	2,299,500,000	1095
IFR5	TBD	Oil/Condensate	C	IF	100,000	15,899	39.8	15.2	Tan	Tan	Good	2,299,500,000	548
IFR6	TBD	Oil/Condensate	C	IF	100,000	15,899	39.8	15.2	Tan	Tan	Good	2,299,500,000	548
IFR7	TBD	Oil/Condensate	C	IF	100,000	15,899	39.8	15.2	Tan	Tan	Good	2,299,500,000	548
IFR8	TBD	Oil/Condensate	C	IF	100,000	15,899	39.8	15.2	Tan	Tan	Good	2,299,500,000	548
IFR9	TBD	Oil/Condensate	C	IF	100,000	15,899	39.8	15.2	Tan	Tan	Good	2,299,500,000	548
IFR10	TBD	Oil/Condensate	C	IF	100,000	15,899	39.8	15.2	Tan	Tan	Good	2,299,500,000	548
IFR11	TBD	Oil/Condensate	C	IF	100,000	15,899	39.8	15.2	Tan	Tan	Good	2,299,500,000	548
IFR12	TBD	Oil/Condensate	C	IF	100,000	15,899	39.8	15.2	Tan	Tan	Good	2,299,500,000	548
IFR13	TBD	Oil/Condensate	C	IF	100,000	15,899	39.8	15.2	Tan	Tan	Good	2,299,500,000	548
IFR14	TBD	Oil/Condensate	C	IF	100,000	15,899	39.8	15.2	Tan	Tan	Good	2,299,500,000	548
GBS1	TBD	Produced Water	NA	FX	1,000	159	4.7	7.3	Tan	Tan	Good	64,313,353	1531
PWTK1	TBD	Produced Water	NA	FX	750	119	4.7	7.3	Tan	Tan	Good	32,155,018	1021
PWTK2	TBD	Produced Water	NA	FX	750	119	4.7	7.3	Tan	Tan	Good	32,155,018	1021
SOTK1	TBD	Slop - Oil/Condensate	NA	FX	500	79	4.7	4.9	Tan	Tan	Good	239,586	11

Table 2-L2: Liquid Storage Tank Data Codes Reference Table

Roof Type	Seal Type, Welded Tank Seal Type		Seal Type, Riveted Tank Seal Type		Roof, Shell Color	Paint Condition
FX: Fixed Roof	**Mechanical Shoe Seal**	**Liquid-mounted resilient seal**	**Vapor-mounted resilient seal**	**Seal Type**	**WH**: White	Good
IF: Internal Floating Roof	**A**: Primary only	**A**: Primary only	**A**: Primary only	**A**: Mechanical shoe, primary only	**AS**: Aluminum (specular)	Poor
EF: External Floating Roof	**B**: Shoe-mounted secondary	**B**: Weather shield	**B**: Weather shield	**B**: Shoe-mounted secondary	**AD**: Aluminum (diffuse)	
P: Pressure	**C**: Rim-mounted secondary	**C**: Rim-mounted secondary	**C**: Rim-mounted secondary	**C**: Rim-mounted secondary	**LG**: Light Gray	
					MG: Medium Gray	
					BL: Black	
					OT: Other (specify)	

Note: 1.00 bbl = 0.159 M^3 = 42.0 gal

Table 2-M: Materials Processed and Produced (Use additional sheets as necessary.)

Material Processed				Material Produced			
Description	**Chemical Composition**	**Phase (Gas, Liquid, or Solid)**	**Quantity (specify units)**	**Description**	**Chemical Composition**	**Phase**	**Quantity (specify units)**
Mixed Hydrocarbons	Oil/Condensate	Liquid	1200000 (BOPD)	Mixed Hydrocarbons	Oil/Condensate	Liquid	1200000 (BOPD)
	Produced Water	Liquid	4195 (BWPD)		Produced Water	Liquid	4195 (BWPD)
	Natural Gas	Gas	1000 (MMSCFD)		Natural Gas	Gas	1000 (MMSCFD)
	Natural Gas Liquids	Liquid	190000 (BOPD)		Natural Gas Liquids	Liquid	190000 (BOPD)

Table 2-N: CEM Equipment

Enter Continuous Emissions Measurement (CEM) Data in this table. If CEM data will be used as part of a federally enforceable permit condition, or used to satisfy the requirements of a state or federal regulation, include a copy of the CEM's manufacturer specification sheet in the Information Used to Determine Emissions attachment. Unit and stack numbering must correspond throughout the application package. Use additional sheets if necessary.

Stack No.	Pollutant(s)	Manufacturer	Model No.	Serial No.	Sample Frequency	Averaging Time	Range	Sensitivity	Accuracy
N/A									

Table 2-O: Parametric Emissions Measurement Equipment

Unit and stack numbering must correspond throughout the application package. Use additional sheets if necessary.

Unit No.	Parameter/Pollutant Measured	Location of Measurement	Unit of Measure	Acceptable Range	Frequency of Maintenance	Nature of Maintenance	Method of Recording	Averaging Time
N/A								

Table 2-P: Greenhouse Gas Emissions

Applications submitted under 20.2.70, 20.2.72, & 20.2.74 NMAC are required to complete this Table. Power plants, Title V major sources, and PSD major sources must report and calculate all GHG emissions for each unit. Applicants must report potential emission rates in short tons per year (see Section 6.a for assistance). Include GHG emissions during Startup, Shutdown, and Scheduled Maintenance in this table. For minor source facilities that are not power plants, are not Title V, or are not PSD, there are three options for reporting GHGs 1) report GHGs for each individual piece of equipment; 2) report all GHGs from a group of unit types, for example report all combustion source GHGs as a single unit and all venting GHG as a second separate unit; OR 3) check the following box ☐ By checking this box, the applicant acknowledges the total CO2e emissions are less than 75,000 tons per year.

		CO_2 ton/yr	N_2O ton/yr	CH_4 ton/yr	SF_6 ton/yr	PFC/HFC ton/yr[2]									Total GHG Mass ton/yr[4]	Total CO_2e ton/yr[5]
Unit No.	**GWPs [1]**	**1**	**298**	**25**	**22,800**	**footnote 3**										
SHTR1-8	**mass GHG**	241588.6	0.5	4.6											241593.6	
	CO_2e	241588.6	135.7	113.8												241838.1
CHTR1-4	**mass GHG**	193787.4	0.4	3.7											193791.4	
	CO_2e	193787.4	108.8	91.3												193987.5
RHTR1-4	**mass GHG**	72255.2	0.1	1.4											72256.7	
	CO_2e	72255.2	40.6	34.0												72329.8
FL1-FL3	**mass GHG**	13996.2	--	0.01											13996.2	
	CO_2e	13996.2	--	0.2												13996.3
FL1-FL3OVHD-SSM	**mass GHG**	3168.5	--	0.002											3168.5	
	CO_2e	3168.5	--	0.04												3168.6
FL1-FL3CRYO-SSM	**mass GHG**	5439.1	--	22.4											5461.5	
	CO_2e	5439.1	--	560.3												5999.3
IFR1-IFR4	**mass GHG**	0.01	--	--											0.01	
	CO_2e	0.01	--	--												0.01
IFR5-IFR14	**mass GHG**	0.04	--	--											0.04	
	CO_2e	0.04	--	--												0.04
ECD1	**mass GHG**	999.0	--	0.002											999.0	
	CO_2e	999.0	--	0.06												999.0
TO1	**mass GHG**	106227.5	--	34.8											106262.3	
	CO_2e	106227.5	--	868.9												107096.5
TO2	**mass GHG**	106227.5	--	34.8											106262.3	
	CO_2e	106227.5	--	868.9												107096.5
TO3	**mass GHG**	106227.5	--	34.8											106262.3	
	CO_2e	106227.5	--	868.9												107096.5
TO4	**mass GHG**	106227.5	--	34.8											106262.3	
	CO_2e	106227.5	--	868.9												107096.5
FUG	**mass GHG**	0.5	--	127.6											128.1	
	CO_2e	0.5	--	3189.0												3189.6
GEN1-GEN4	**mass GHG**	627.9	0.001	0.01											627.9	
	CO_2e	627.9	0.3	0.2												628.4
Total	**mass GHG**	956772.5	1.0	298.6											957072.1	
	CO_2e	956772.5	285.4	7464.6												964522.5

[1] **GWP** (Global Warming Potential): Applicants must use the most current GWPs codified in Table A-1 of 40 CFR part 98. GWPs are subject to change, therefore, applicants need to check 40 CFR 98 to confirm GWP values.

[2] For **HFCs** or **PFCs** describe the specific HFC or PFC compound and use a separate column for each individual compound.

[3] For each new compound, enter the appropriate GWP for each HFC or PFC compound from Table A-1 in 40 CFR 98.

[4] Green house gas emissions on a **mass basis** is the ton per year green house gas emission before adjustment with its GWP.

[5] **CO_2e** means Carbon Dioxide Equivalent and is calculated by multiplying the TPY mass emissions of the green house gas by its GWP.

Section 3

Application Summary

The **Application Summary** shall include a brief description of the facility and its process, the type of permit application, the applicable regulation (i.e. 20.2.72.200.A.X, or 20.2.73 NMAC) under which the application is being submitted, and any air quality permit numbers associated with this site. If this facility is to be collocated with another facility, provide details of the other facility including permit number(s). In case of a revision or modification to a facility, provide the lowest level regulatory citation (i.e. 20.2.72.219.B.1.d NMAC) under which the revision or modification is being requested. Also describe the proposed changes from the original permit, how the proposed modification will affect the facility's operations and emissions, de-bottlenecking impacts, and changes to the facility's major/minor status (both PSD & Title V).

The **Process Summary** shall include a brief description of the facility and its processes.

Startup, Shutdown, and Maintenance (SSM) routine or predictable emissions: Provide an overview of how SSM emissions are accounted for in this application. Refer to "Guidance for Submittal of Startup, Shutdown, Maintenance Emissions in Permit Applications (http://www.env.nm.gov/aqb/permit/app_form.html) for more detailed instructions on SSM emissions.

XTO Energy Inc. is requesting a Significant Revision of Cowboy Central Delivery Point (Cowboy CDP) NSR Permit #7877M1 in accordance with 20.2.72.219.D(1) NMAC. The facility is located approximately 14 miles southeast of Malaga in Eddy County, New Mexico.

The facility utilizes amine sweetening units to remove hydrogen sulfide (H_2S) and carbon dioxide (CO_2) from raw natural gas, followed by dehydration to eliminate moisture. The sweetened gas then enters cryogenic units, where it is cooled to separate valuable natural gas liquids (NGLs) from the gas stream. The incoming oil undergoes stabilization through heating from gas-fired auxiliary heaters, eliminating volatile components for safe transportation via pipeline. The central delivery point portion of the facility will receive up to 600,000 barrels of oil per day from surrounding field production batteries. The facility has storage tanks for storing the processed oil and NGLs. The oil and NGLs are transferred offsite via pipelines, while water and slop oil can be transported offsite by truck.

With this application, XTO is requesting an addition of six (6) oil tanks, each with a capacity of 100,000 bbl. This significant revision will increase the storage capacity of oil. Also, XTO will route the total condensate (600,000 bbl/day) throughput through either 50,000 bbl or 100,000 bbl tanks for a conservative emission calculation. As a result, tanks (IFR1-4) emissions will change after the requested modification. However, the throughputs of natural gas (1 BSCFD), oil (600,000 bbl/day), and natural gas liquid (190,000 bbl/day) of this facility will remain unchanged.

Also, XTO will update the number of fugitive components, inlet gas analysis, and Flare-3 (FL-3) pilot and purge gas emissions. This update includes the update of the fugitive emission factors for the petroleum storage transfer unit portion based on the Protocol for Equipment Leak Emission Estimates Table 2-3 for Marketing Terminal Average Emission factors. The updated fugitive emission factors will more accurately represent the facility fugitive emissions. FL-3 pilot and purge gas emissions will be updated based on the manufacturer specifications. XTO Energy performed a facility-wide PSD nested source category to determine significant emission rates.

SSM emissions from equipment maintenance are routed to either the low-pressure or high-pressure flare header (Units FL1-FL3OVHD-SSM and FL1-FL3CRYO-SSM). XTO Energy is requesting 10 tpy VOC Malfunction emission for this facility.

Section 4

Process Flow Sheet

A **process flow sheet** and/or block diagram indicating the individual equipment, all emission points and types of control applied to those points. The unit numbering system should be consistent throughout this application.

A Process Flow Diagram is attached to this application.

COWBOY CDP PROCESS FLOW

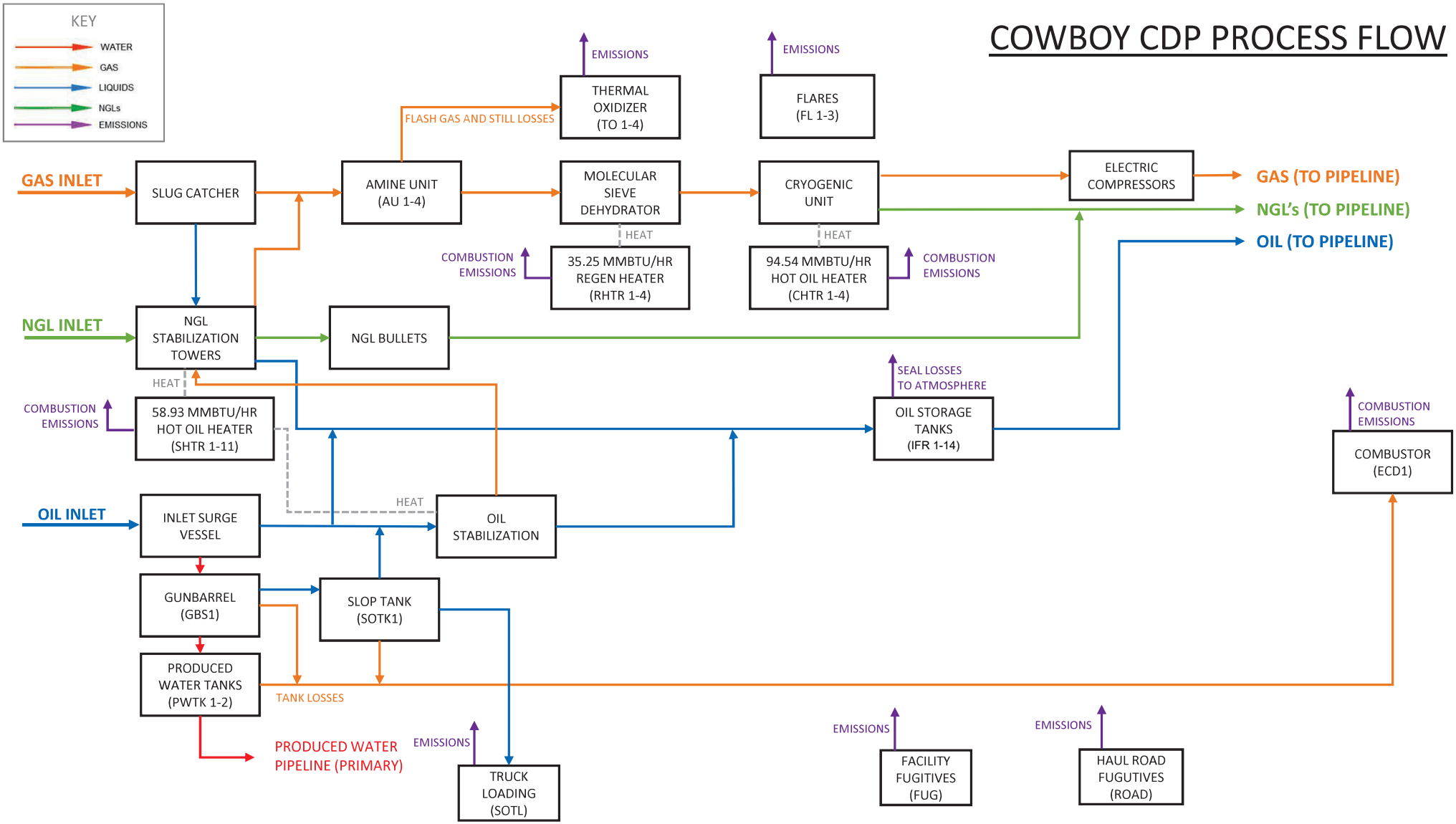

Section 5

Plot Plan Drawn to Scale

A **plot plan drawn to scale** showing emissions points, roads, structures, tanks, and fences of property owned, leased, or under direct control of the applicant. This plot plan must clearly designate the restricted area as defined in UA1, Section 1-D.12. The unit numbering system should be consistent throughout this application.

A plot plan is attached to this application.

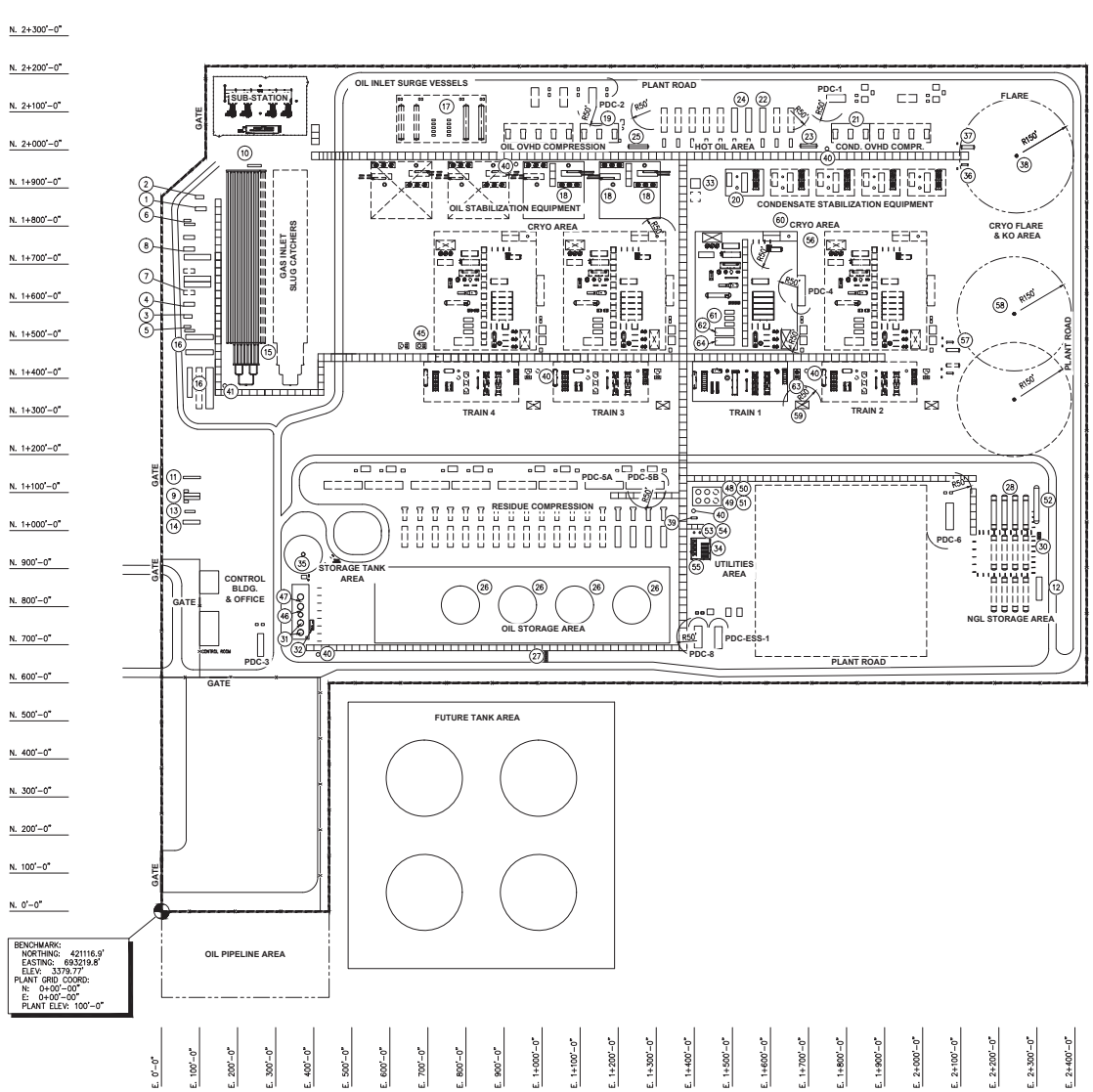

EQUIPMENT LIST		
1	16" NORTH GAS P/L PIG RECEIVER	PR-2002
2	20" NORTH GAS P/L PIG RECEIVER	PR-2001
3	16" SOUTH GAS P/L PIG RECEIVER	PR-2004
4	20" SOUTH GAS P/L PIG RECEIVER	PR-2003
5	SOUTH NGL P/L PIG RECEIVER & INLET METER SKID	PR-2006 & SK-2006
6	NORTH NGL P/L PIG RECEIVER & INLET METER SKID	PR-2005 & SK-2005
7	SOUTH OIL P/L PIG RECEIVER & INLET METER SKID	PR-1002 & SK-1002
8	NORTH OIL P/L PIG RECEIVER & INLET METER SKID	PR-1001 & SK-1001
9	NORTH & SOUTH FIELD FUEL GAS LAUNCHER & METER SKID	PL-2040/41 & SK-2040
10	CONDENSATE INLET METERING SKID	SK-2010
11	N & S LP GAS LAUNCHER & METER SKID	PL-2050 & SK-2050
12	Y-GRADE OUTLET METER SKID	SK-5550
13	PRODUCED WATER METER SKID	SK-7050
14	FRESH WATER INLET AND METER SKID	
15	GAS INLET SLUG CATCHER	SC-2010
16	RICH & RESIDUE GAS METER SKIDS & OUTLETS	SK-2025/2026/2030/XXXX
17	OIL INLET SURGE VESSELS & PUMPS	V-1011/1012 & P-1020A/B/C & P-1025A/B/C/D
18	OIL STABILIZER PACKAGES	PK-1100/1110/1200
19	OIL STAB. OVERHEAD GAS COMPRESSOR PACKAGE	PK-1600/1610/1620
20	CONDENSATE STABILIZER PACKAGE	PK-2100
21	COND. STAB. OVERHEAD GAS COMPRESSOR PACKAGE	PK-2600/2610/2620
22	COND. STABIL. HOT OIL PACKAGES/PUMPS/BURNERS	PK-6030 (SK-6031/6032)
23	COND. STABILIZATION HOT OIL EXPANSION VESSEL	V-6003
24	OIL STABIL. HOT OIL PACKAGES/PUMPS/BURNERS	PK-6010 (SK-6011/12) & PK-6020 (SK-6021/22)
25	OIL STABILIZATION HOT OIL EXPANSION VESSEL	V-6001
26	OIL STORAGE TANKS	TK-4201/4202/4203/4204
27	OIL BOOSTER PUMPS	P-4401/4402
28	NGL STORAGE VESSELS	V-5201/5202/5203/5204
29	DELETED	
30	NGL PIPELINE PUMPS	P-5501/5502
31	PRODUCED WATER TANKS	TK-7005/7006
32	PRODUCED WATER DISPOSAL PUMPS	P-7011/7012
33	FUEL GAS SKID	PK-6210 & FUTURE
34	INSTRUMENT AIR PACKAGE	PK-6260 & FUTURE
35	COMBUSTER W/ K.O. DRUM & PUMPS	V-6820 & P-6820A/B & FS-6820
36	LP FLARE K.O. DRUM & PUMPS	V-6808 & P-6808A/B
37	HP FLARE K.O. DRUM & PUMPS	V-6809 & P-6809A/B
38	FLARE STACK	FS-6810
39	CLOSED DRAIN DRUM	V-6860
40	OPEN DRAIN SUMPS & PUMPS	TK-6870/1/2/3/4 & P-6870/1/2/3/4
41	PIG RECEIVER OPEN DRAIN SUMP & PUMPS	TK-6875 & P-6875
42	DELETED	
43	DELETED	
44	DELETED	
45	RICH GAS SCRUBBER & PUMPS	V-2020 & P-2020 A/B
46	SLOP OIL TANK & PUMPS	TK-6895 & P-6895A/B
47	GUNBARREL TANK	TK-7001
48	RAW WATER TANK & PUMPS	TK-6450 & P-6451A/B
49	DEMINERALIZED WATER MAKE-UP TANK & PUMP	TK-6520 & P-6520A/B
50	AMINE MAKE-UP TANK & PUMP	TK-6500 & P-6500
51	LUBE OIL MAKE-UP TANK	--
52	PROPANE MAKE-UP TANK	V-6550
53	UTILITY AIR RECEIVER	V-6255
54	INSTRUMENT AIR RECEIVER	V-6250
55	UTILITY WATER TREATMENT PACKAGE	PK-6510
56	CRYO PACKAGE	--
57	CRYO TRAIN 1 & 2, LP & HP FLARE K.O. DRUM & PUMPS	V-6958 & P-6958A/B & V-6959 & P-6958A/B
58	CRYO TRAIN 1 & 2 FLARE STACK	FS-6960
59	THERMAL OXIDIZER	TO-6980
60	CRYO HOT OIL PACKAGE (PUMPS & BURNER SKIDS)	PK-6110 (SK-6111/6112)
61	CRYO NGL PIPELINE PUMPS	P-3151/3152/3153
62	CRYO NGL COOLER	AC-3155
63	CRYO RICH GAS SCRUBBER & PUMPS	V-3101 & P-3101A/B
64	RSV RECYCLE FILTER COALESCER	F-3190A/B

NOTES

EQUIPMENT SIZES ARE PRELIMINARY AND ARE SUBJECTED TO CHANGE UPON DETAIL ENGINEERING.

REFERENCE DRAWINGS

DWG. NO.	DESCRIPTION
--	--

REVISIONS

REV.	DESCRIPTION	DRWN	CHKD	APPRV	DATE
E	ISSUED FOR HAZOP	CA			
D	ISSUED FOR DESIGN	SG	DH	GG	10/11/18
C	NOT ISSUED				
B	ISSUED FOR REVIEW	CA	DH	GG	05/21/18
A	PRELIMINARY	CA	DH	GG	05/17/18

PROJECT INFO.

DRAWN BY: SJB
DATE: 10/23/17
AEC JOB NO.: 018193-001
AFE/P.O. NO.:
CLIENT FILE NO.:
SCALE: 1"=150'

XTO ENERGY

PLOT PLAN
COWBOY NATURAL GAS & OIL CDP

EDDY COUNTY NEW MEXICO

DWG. NO. CB-0300 REV. E

NOTICE: THIS DOCUMENT IS SOLELY FOR THE USE OF THE CONTRACTUAL CLIENT AND AUDUBON AND ITS AFFILIATES (AUDUBON). AUDUBON ASSUMES NO RISK TO ANY OTHER PARTY FOR ANY REPRESENTATIONS CONTAINED IN THIS DOCUMENT.

Drawing name: S:\AE\Projects\XTO\Delaware_CDP\018193-001\300_Mechanical\170_Drawings\CB_CDA\CB-0300.dwg Plotted on: Dec 06, 2018 - 6:14pm

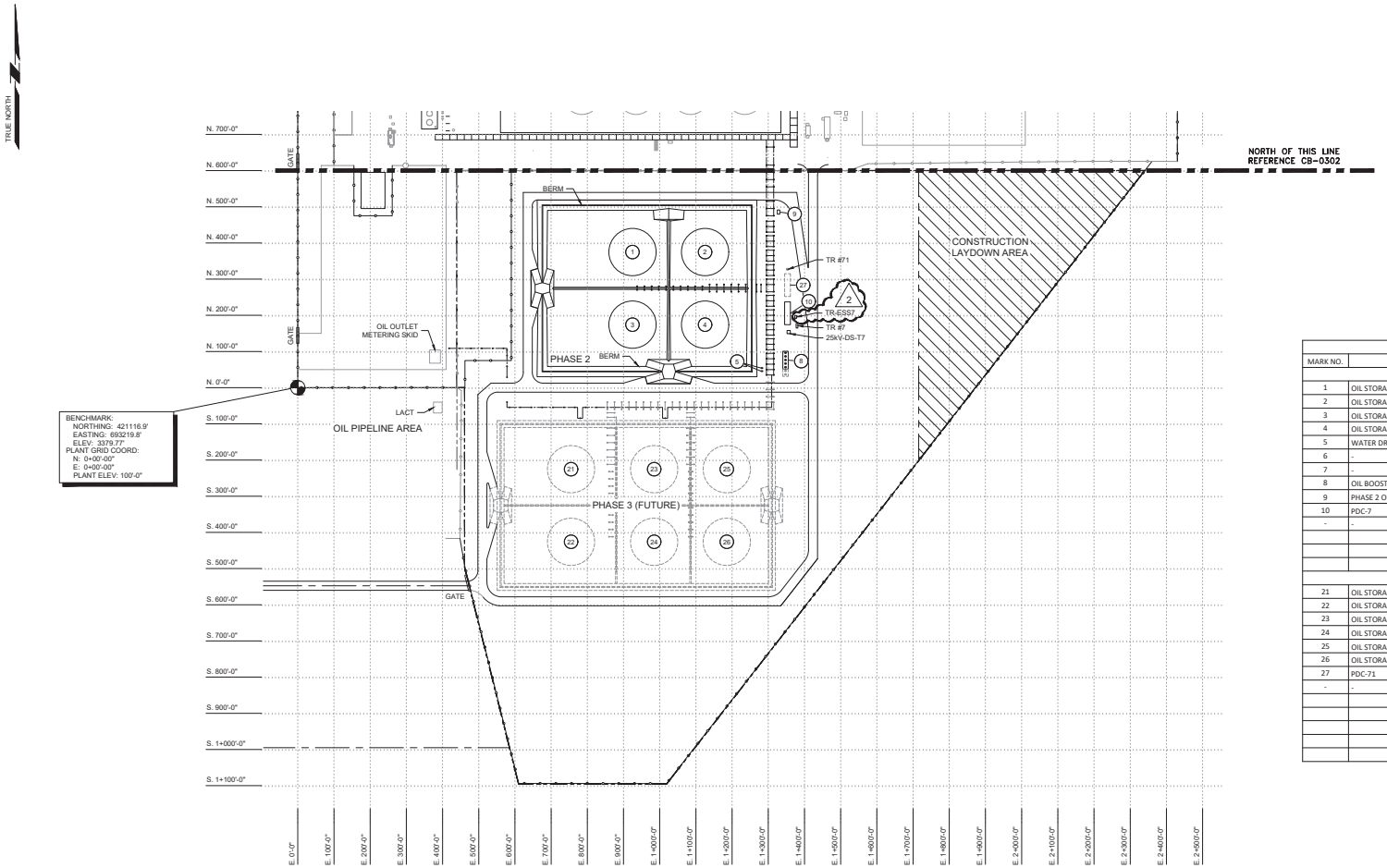

EQUIPMENT INDEX		
MARK NO.	DESCRIPTION	TAG NO.
TANK FARM AREA - PHASE 2		
1	OIL STORAGE TANK	TK-4211
2	OIL STORAGE TANK	TK-4212
3	OIL STORAGE TANK	TK-4213
4	OIL STORAGE TANK	TK-4214
5	WATER DRAW-OFF PUMPS	P-4221A / B
6	-	-
7	-	-
8	OIL BOOSTER PUMPS	P-4411 / 4412 / 4413 / 4414 / 4415
9	PHASE 2 OIL TANK AFFF SYSTEM	PK-6448
10	PDC-7	
-	-	
TANK FARM AREA - PHASE 3 (FUTURE)		
21	OIL STORAGE TANK	
22	OIL STORAGE TANK	
23	OIL STORAGE TANK	
24	OIL STORAGE TANK	
25	OIL STORAGE TANK	
26	OIL STORAGE TANK	
27	PDC-71	
-	-	

NOTES

-

REFERENCE DRAWINGS

DWG. NO.	DESCRIPTION
CB-0302	PLOT PLAN

REVISIONS

REV.	DESCRIPTION	DRWN	CHKD	APPRV	DATE
2	REVISED ISSUED FOR CONSTRUCTION – SAULSBURY JOB #11078	JDW	SSR	DV	08/02/23
1	REVISED ISSUED FOR CONSTRUCTION – SAULSBURY JOB #11078	JDW	SSR	DV	06/26/23
0	ISSUED FOR CONSTRUCTION – SAULSBURY JOB #11078	JDW	SSR	DV	05/11/23

PROJECT INFO.

DRAWN BY: JDW
DATE: 03/17/23
SAULSBURY JOB NO.: 11078
AFE/P.O. NO.:
CLIENT FILE NO.:
SCALE: 1"=150'

DAVID M. VALDEZ
NEW MEXICO
25938
PROFESSIONAL ENGINEER

SAULSBURY
ENGINEERING SERVICES
SAULSBURY.COM
TEXAS REGISTERED ENGINEERING FIRM F-518

XTO ENERGY

PLOT PLAN
TANK FARM – PHASE 2
COWBOY NATURAL GAS & OIL CDP
EDDY COUNTY NEW MEXICO

DWG. NO.: DN-PLCOW-CD-SB-CX-LAY-0303
REV.: 2

Drawing name: J:\XTO Energy\11078 XTO TP JOA\03 ENGINEERING, DESIGN\3.4 Plan\3.4.3 Drawings - PN Plan\DN\PLCOW-CD-SB-CX-LAY-0303.dwg Plotted on: Aug 01, 2023 - 4:38pm

Section 6

All Calculations

Show all calculations used to determine both the hourly and annual controlled and uncontrolled emission rates. All calculations shall be performed keeping a minimum of three significant figures. Document the source of each emission factor used (if an emission rate is carried forward and not revised, then a statement to that effect is required). If identical units are being permitted and will be subject to the same operating conditions, submit calculations for only one unit and a note specifying what other units to which the calculations apply. All formulas and calculations used to calculate emissions must be submitted. The "Calculations" tab in the UA2 has been provided to allow calculations to be linked to the emissions tables. Add additional "Calc" tabs as needed. If the UA2 or other spread sheets are used, all calculation spread sheet(s) shall be submitted electronically in Microsoft Excel compatible format so that formulas and input values can be checked. Format all spread sheets and calculations such that the reviewer can follow the logic and verify the input values. Define all variables. If calculation spread sheets are not used, provide the original formulas with defined variables. Additionally, provide subsequent formulas showing the input values for each variable in the formula. All calculations, including those calculations are imbedded in the Calc tab of the UA2 portion of the application, the printed Calc tab(s), should be submitted under this section.

Tank Flashing Calculations: The information provided to the AQB shall include a discussion of the method used to estimate tank-flashing emissions, relative thresholds (i.e., NOI, permit, or major source (NSPS, PSD or Title V)), accuracy of the model, the input and output from simulation models and software, all calculations, documentation of any assumptions used, descriptions of sampling methods and conditions, copies of any lab sample analysis. If Hysis is used, all relevant input parameters shall be reported, including separator pressure, gas throughput, and all other relevant parameters necessary for flashing calculation.

SSM Calculations: It is the applicant's responsibility to provide an estimate of SSM emissions or to provide justification for not doing so. In this Section, provide emissions calculations for Startup, Shutdown, and Routine Maintenance (SSM) emissions listed in the Section 2 SSM and/or Section 22 GHG Tables and the rational for why the others are reported as zero (or left blank in the SSM/GHG Tables). Refer to "Guidance for Submittal of Startup, Shutdown, Maintenance Emissions in Permit Applications (http://www.env.nm.gov/aqb/permit/app_form.html) for more detailed instructions on calculating SSM emissions. If SSM emissions are greater than those reported in the Section 2, Requested Allowables Table, modeling may be required to ensure compliance with the standards whether the application is NSR or Title V. Refer to the Modeling Section of this application for more guidance on modeling requirements.

Glycol Dehydrator Calculations: The information provided to the AQB shall include the manufacturer's maximum design recirculation rate for the glycol pump. If GRI-Glycalc is used, the full input summary report shall be included as well as a copy of the gas analysis that was used.

Road Calculations: Calculate fugitive particulate emissions and enter haul road fugitives in Tables 2-A, 2-D and 2-E for:

1. If you transport raw material, process material and/or product into or out of or within the facility and have PER emissions greater than 0.5 tpy.
2. If you transport raw material, process material and/or product into or out of the facility more frequently than one round trip per day.

Significant Figures:

A. All emissions standards are deemed to have at least two significant figures, but not more than three significant figures.

B. At least 5 significant figures shall be retained in all intermediate calculations.

C. In calculating emissions to determine compliance with an emission standard, the following rounding off procedures shall be used:

(1) If the first digit to be discarded is less than the number 5, the last digit retained shall not be changed;

(2) If the first digit discarded is greater than the number 5, or if it is the number 5 followed by at least one digit other than the number zero, the last figure retained shall be increased by one unit; **and**

(3) If the first digit discarded is exactly the number 5, followed only by zeros, the last digit retained shall be rounded upward if it is an odd number, but no adjustment shall be made if it is an even number.

(4) The final result of the calculation shall be expressed in the units of the standard.

Control Devices: In accordance with 20.2.72.203.A(3) and (8) NMAC, 20.2.70.300.D(5)(b) and (e) NMAC, and 20.2.73.200.B(7) NMAC, the permittee shall report all control devices and list each pollutant controlled by the control device regardless if the applicant takes credit for the reduction in emissions. The applicant can indicate in this section of the application if they chose to not take credit for the reduction in emission rates. For notices of intent submitted under 20.2.73 NMAC, only uncontrolled emission rates can be considered to determine applicability unless the state or federal Acts require the control. This information is necessary to determine if federally enforceable conditions are necessary for the control device, and/or if the control device produces its own regulated pollutants or increases emission rates of other pollutants.

Calculation from Previous Application

Hot Oil Heaters (SHTR1 – SHTR8, CHTR1 – CHTR4, RHTR1 – RHTR4)
The facility will be equipped with eight (8) 58.93 Million British Thermal units per hour (MMbtu/hr) burners used for heating units in oil & NGL stabilization, four (4) 94.54 MMbtu/hr burners used for natural gas cryogenic heaters, and four (4) 35.25 MMbtu/hr burners used for amine regeneration. Two (2) 58.93 MMBtu/hr heaters and two (2) 94.54 MMbtu/hr heaters will be equipped with SCR catalysts to control NO_X emissions. The heaters generate emissions of nitrogen oxides (NO_X), carbon dioxide (CO), volatile organic compounds (VOC), sulfur dioxide (SO_2), and Particulate Matter (PM). NO_X, CO, and VOC emissions were calculated using manufacturer's guaranteed exhaust concentrations. PM, hazardous air pollutants (HAPs), and SO_2 emissions were calculated using emission factors from AP-42 Section 1.4 for natural gas combustion. Supporting manufacturer documentation is provided in Section 7.

Thermal Oxidizers (TO1 – TO4)
Thermal oxidizers (TO) will be used to control vapors from the amine flash vessels and acid gas from the amine still reflux accumulators. Speciated VOC, SO_2 and HAP emissions associated with the flash vessels and still vents were calculated using Bryan Research and Engineering's (BR&E) Promax simulation software (see simulation report in Section 7). The ProMax simulation for each amine flash vessel and still vent was designed to simulate emissions at the maximum design gas throughput of 250 Million standard cubic feet per day (MMscfd) per cryo train and maximum design amine recirculation pump rates of 500 standard gallons per minute (sgpm). To be conservative, total HAP emissions were calculated assuming that the total molar concentration of hydrocarbon components that are hexanes or heavier (C6+) is equal to the molar concentration of each individual HAP component. A manufacturer guaranteed destruction efficiency of 99% was used for the TO. Emissions of NO_X and CO from the TOs were calculated using manufacturer's guaranteed exhaust concentrations. PM emissions from TO combustion were calculated using AP-42 Section 1.4. Supporting manufacturer documentation is provided in Section 7.

SSM/Emergency Flares (FL1 – FL3)
The facility will be equipped with three (3) start, shutdown, and maintenance (SSM) activity/emergency dual-tip flares. NO_X and CO emissions were calculated using emission factors from the Texas Commission on Environmental Quality (TCEQ) publication RG-360A/09. VOC emissions were calculated using a material balance and the manufacturer's guaranteed destruction efficiency. Emissions from FL1 and FL2 were each calculated to include a constant pilot fuel rate of 500 standard cubic feet per hour (scfh) and constant purge gas rates through the low pressure and high pressure header systems of 3,705 scfh for the cryo flare (FL2) and 1,275 scfh for the stabilizer flare (FL1). FL3 will only operate as backup to FL1 and FL2. The flares have a control efficiency of 98%, with manufacturer documentation provided in Section 7 of the application.

SSM activities routed to the flares could include process vessel purging and maintenance blowdowns for process equipment associated with the oil and NGL stabilization and the natural gas processing cryo trains. A maximum hourly SSM gas rate to any of the dual-tip flares of 500,000 scfh was included in the calculations for a maximum of 2 hours per day for 40 hours per year for stabilizer overhead blowdowns. A separate maximum hourly SSM gas rate to the any of the dual-tip flares of 2,000,000 scfh was included for a maximum of 2 hours per day for 40 hours per year for natural gas cryo train equipment blowdowns. For permitting purposes, the total SSM rate established for each SSM event is intended to represent one total limit for all three flares and overhead blowdowns cannot occur within a 24 hour period of cryo train equipment blowdowns.

Combustor (ECD1)
An enclosed combustor will control flashing, working, and breathing losses from the gunbarrel separator and fixed roof tanks, as well as the displaced vapors from truck loading operations from the slop oil tank. Emissions of NO_X and CO from the

Combustor were calculated using manufacturer's guaranteed exhaust concentrations. VOC emissions were calculated using speciated streams determined from BR&E ProMax software and the manufacturer's guaranteed destruction efficiency of 99%. A constant pilot gas fuel rate of 180 scfh is included in the emission calculations for the combustor. Supporting manufacturer documentation is provided in Section 7.

Storage Tanks (IFR5 – IFR8, GBS1, SOTK1, PWTK1 – PWTK2)
Flashing, working and breathing emissions from the eight (8) internal floating roof (IFR) crude oil tanks, one fixed roof gunbarrel tank, one (1) slop fixed roof oil tank, and two (2) fixed roof produced water storage tanks were calculated using BR&E ProMax simulation software. Emissions from the fixed roof tanks will be controlled by ECD1. The simulation reports' details and summaries are included in Section 7.

Truck Loading (SOTL)
Controlled emissions from slop oil loading of trucks were calculated using Equation 1 of AP-42 Section 5.2. Maximum slop oil loading rates are calculated using 249 BOPD. Relevant portions of AP-42 Section 5.2 are included in Section 7. Slop oil truck loading will be controlled by the combustor (ECD1).

Startup, Shutdown, and Maintenance
Startup, shutdown, and maintenance (SSM) emissions not routed to the flare system were assumed equal to the flat 10 tpy of VOC per State guidance. Specific SSM emissions include small equipment blowdowns, tank emptying and refilling, tank roof landing, and miscellaneous activities. Other SSM emissions are routed to the flare and calculated in accordance with the flare methodology above.

Haul Road Fugitive Emissions
Fugitive haul road emissions were calculated using Equations 1a and 2 of AP-42 Section 13.2.2. Relevant portions of AP-42 Section 13.2.2 are included in Section 7.

Emergency Generators (GEN1-GEN4)
Emission factors for NO_X, CO, formaldehyde, and VOC are based on manufacturer's data. Emission rates TSP, PM_{10}, and $PM_{2.5}$ were calculated using AP-42 Table 3.2-3 emission factors. PM_{10} and $PM_{2.5}$ emissions are set equal to TSP emissions as a conservative measure. SO_2 emissions were calculated based on the units' fuel consumption and a maximum sulfur content of 0.75 grains per 100 standard cubic feet (0.75 gr/100 scf). Hazardous Air Pollutants (HAPs) except for formaldehyde were calculated using AP-42 factors. Annual operation was assumed to be 100 hours per generator.

Calculation Related to Proposed Changes

Piping Component Fugitive Emissions (FUG)
Facility fugitive emissions were calculated using "Protocol for Equipment Leak Emission Estimates" document, and conservatively assumed component counts from P&I diagram of the facility.

Storage Tanks (IFR1 – IFR4)
Flashing, working, and breathing emissions from the four (4) internal floating roof (IFR) crude oil tanks were calculated using BR&E ProMax simulation software. Emissions from the fixed roof tanks will be controlled by ECD1.

Storage Tanks (IFR9 – IFR14)
Flashing, working and breathing emissions from the six (6) internal floating roof (IFR) crude oil tanks were calculated using BR&E ProMax simulation software. Emissions from the fixed roof tanks will be controlled by ECD1.

Flare-3 (FL3)
Flare-3's pilot and purge emissions were added to FL3.

Section 6.a

Green House Gas Emissions

(Submitting under 20.2.70, 20.2.72 20.2.74 NMAC)

Title V (20.2.70 NMAC), Minor NSR (20.2.72 NMAC), and PSD (20.2.74 NMAC) applicants must estimate and report greenhouse gas (GHG) emissions to verify the emission rates reported in the public notice, determine applicability to 40 CFR 60 Subparts, and to evaluate Prevention of Significant Deterioration (PSD) applicability. GHG emissions that are subject to air permit regulations consist of the sum of an aggregate group of these six greenhouse gases: carbon dioxide (CO_2), nitrous oxide (N_2O), methane (CH_4), hydrofluorocarbons (HFCs), perfluorocarbons (PFCs), and sulfur hexafluoride (SF_6).

Calculating GHG Emissions:

1. Calculate the ton per year (tpy) GHG mass emissions and GHG CO_2e emissions from your facility.
2. GHG mass emissions are the sum of the total annual tons of greenhouse gases without adjusting with the global warming potentials (GWPs). GHG CO_2e emissions are the sum of the mass emissions of each individual GHG multiplied by its GWP found in Table A-1 in 40 CFR 98 Mandatory Greenhouse Gas Reporting.
3. Emissions from routine or predictable start up, shut down, and maintenance must be included.
4. Report GHG mass and GHG CO_2e emissions in Table 2-P of this application. Emissions are reported in **short** tons per year and represent each emission unit's Potential to Emit (PTE).
5. All Title V major sources, PSD major sources, and all power plants, whether major or not, must calculate and report GHG mass and CO2e emissions for each unit in Table 2-P.
6. For minor source facilities that are not power plants, are not Title V, and are not PSD there are three options for reporting GHGs in Table 2-P: 1) report GHGs for each individual piece of equipment; 2) report all GHGs from a group of unit types, for example report all combustion source GHGs as a single unit and all venting GHGs as a second separate unit; 3) or check the following ☐ By checking this box, the applicant acknowledges the total CO2e emissions are less than 75,000 tons per year.

Sources for Calculating GHG Emissions:

- Manufacturer's Data
- AP-42 Compilation of Air Pollutant Emission Factors at http://www.epa.gov/ttn/chief/ap42/index.html
- EPA's Internet emission factor database WebFIRE at http://cfpub.epa.gov/webfire/
- 40 CFR 98 Mandatory Green House Gas Reporting except that tons should be reported in short tons rather than in metric tons for the purpose of PSD applicability.
- API Compendium of Greenhouse Gas Emissions Methodologies for the Oil and Natural Gas Industry. August 2009 or most recent version.
- Sources listed on EPA's NSR Resources for Estimating GHG Emissions at http://www.epa.gov/nsr/clean-air-act-permitting-greenhouse-gases:

Global Warming Potentials (GWP):
Applicants must use the Global Warming Potentials codified in Table A-1 of the most recent version of 40 CFR 98 Mandatory Greenhouse Gas Reporting. The GWP for a particular GHG is the ratio of heat trapped by one unit mass of the GHG to that of one unit mass of CO_2 over a specified time period.

"Greenhouse gas" for the purpose of air permit regulations is defined as the aggregate group of the following six gases: carbon dioxide, nitrous oxide, methane, hydrofluorocarbons, perfluorocarbons, and sulfur hexafluoride. **(20.2.70.7 NMAC, 20.2.74.7 NMAC).** You may also find GHGs defined in 40 CFR 86.1818-12(a).

Metric to Short Ton Conversion:
Short tons for GHGs and other regulated pollutants are the standard unit of measure for PSD and title V permitting programs. 40 CFR 98 Mandatory Greenhouse Reporting requires metric tons.
1 metric ton = 1.10231 short tons (per Table A-2 to Subpart A of Part 98 – Units of Measure Conversions)

Summary

XTO Energy, Inc.

Cowboy CDP

CONTROLLED FACILITY EMISSIONS SUMMARY

EMISSIONS SUMMARY TABLE

EMISSION SOURCE DESCRIPTION	FACILITY NUMBER	STACK NUMBER	NOx		CO		VOC (INCLUDES HAPs)		SO_2		PM		PM_{10}/ $PM_{2.5}$		HAPs		CO2e
			lb/hr	TPY	lb/hr	TPY	lb/hr	TPY	lb/hr	TPY	lb/hr	TPY	lb/hr	TPY	lb/hr	TPY	TPY
Stabilization Hot Oil Heater (58.93 MMBtu/hr)	SHTR1	SHTR1	1.89	8.27	1.15	5.05	0.45	1.98	0.15	0.68	0.53	2.31	0.53	2.31	0.13	0.57	30,229.76
Stabilization Hot Oil Heater (58.93 MMBtu/hr)	SHTR2	SHTR2	1.89	8.27	1.15	5.05	0.45	1.98	0.16	0.68	0.53	2.31	0.53	2.31	0.13	0.57	30,229.76
Stabilization Hot Oil Heater (58.93 MMBtu/hr)	SHTR3	SHTR3	1.89	8.27	1.15	5.05	0.45	1.98	0.16	0.68	0.53	2.31	0.53	2.31	0.13	0.57	30,229.76
Stabilization Hot Oil Heater (58.93 MMBtu/hr)	SHTR4	SHTR4	1.97	6.89	1.20	4.21	0.47	1.65	0.16	0.57	0.55	1.92	0.55	1.92	0.031	0.14	30,229.76
Stabilization Hot Oil Heater (58.93 MMBtu/hr)	SHTR5	SHTR5	1.97	6.89	1.20	4.21	0.47	1.65	0.16	0.57	0.55	1.92	0.55	1.92	0.031	0.14	30,229.76
Stabilization Hot Oil Heater (58.93 MMBtu/hr)	SHTR6	SHTR6	1.97	6.89	1.20	4.21	0.47	1.65	0.16	0.57	0.55	1.92	0.55	1.92	0.031	0.14	30,229.76
Stabilization Hot Oil Heater w/ SCR catalyst (58.93 MMBtu/hr)	SHTR7	SHTR7	0.49	1.73	1.20	4.21	0.47	1.65	0.16	0.57	0.55	1.92	0.55	1.92	0.031	0.14	30,229.76
Stabilization Hot Oil Heater w/ SCR catalyst (58.93 MMBtu/hr)	SHTR8	SHTR8	0.49	1.73	1.20	4.21	0.47	1.65	0.16	0.57	0.55	1.92	0.55	1.92	0.031	0.14	30,229.76
Cryo Hot Oil Heater (94.54 MMBtu/hr)	CHTR1	CHTR1	3.95	13.83	1.93	6.75	0.76	2.65	0.26	0.91	0.88	3.09	0.88	3.09	0.050	0.22	48,496.89
Cryo Hot Oil Heater (94.54 MMBtu/hr)	CHTR2	CHTR2	3.95	13.83	1.93	6.75	0.76	2.65	0.26	0.91	0.88	3.09	0.88	3.09	0.050	0.22	48,496.89
Cryo Hot Oil Heater w/ SCR Catalyst (94.54 MMBtu/hr)	CHTR3	CHTR3	0.79	2.77	1.93	6.75	0.76	2.65	0.26	0.91	0.88	3.09	0.88	3.09	0.050	0.22	48,496.89
Cryo Hot Oil Heater w/ SCR Catalyst (94.54 MMBtu/hr)	CHTR4	CHTR4	0.79	2.77	1.93	6.75	0.76	2.65	0.26	0.91	0.88	3.09	0.88	3.09	0.050	0.22	48,496.89

XTO Energy, Inc.

Cowboy CDP

CONTROLLED FACILITY EMISSIONS SUMMARY

EMISSIONS SUMMARY TABLE

EMISSION SOURCE DESCRIPTION	FACILITY NUMBER	STACK NUMBER	NOx		CO		VOC (INCLUDES HAPs)		SO_2		PM		PM_{10}/ $PM_{2.5}$		HAPs		CO2e
			lb/hr	TPY	lb/hr	TPY	lb/hr	TPY	lb/hr	TPY	lb/hr	TPY	lb/hr	TPY	lb/hr	TPY	TPY
Regen Heater (35.25 MMBtu/hr)	RHTR1	RHTR1	1.18	4.12	0.72	2.52	0.28	0.99	0.10	0.34	0.33	1.15	0.33	1.15	0.019	0.081	18,082.45
Regen Heater (35.25 MMBtu/hr)	RHTR2	RHTR2	1.18	4.12	0.72	2.52	0.28	0.99	0.10	0.34	0.33	1.15	0.33	1.15	0.019	0.081	18,082.45
Regen Heater (35.25 MMBtu/hr)	RHTR3	RHTR3	1.18	4.12	0.72	2.52	0.28	0.99	0.10	0.34	0.33	1.15	0.33	1.15	0.019	0.081	18,082.45
Regen Heater (35.25 MMBtu/hr)	RHTR4	RHTR4	1.18	4.12	0.72	2.52	0.28	0.99	0.10	0.34	0.33	1.15	0.33	1.15	0.019	0.081	18,082.45
Stabilizer Flare 1 (Dual Tip Flare)	FL1-FL3[1]	FL1-FL3[1]	1.79	7.85	3.58	15.67	2.87	12.55	0.23	0.99	0.097	0.42	0.097	0.42	0.024	0.107	13,996.33
Cryo Flare 2 (Dual Tip Flare)																	
Backup SSM/Emergency Flare 3 (Dual Tip Flare)																	
FL1-FL3 Stabilizer Overhead SSM Gas	FL1-FL3OVHD-SSM	FL1-FL3[1]	165.59	3.31	330.57	6.61	1093.54	21.87	0.00	0.00	8.94	0.18	8.94	0.18	15.67	0.31	3,168.58
FL1-FL3 Cryo Blowdown SSM Gas	FL1-FL3CRYO-SSM	FL1-FL3[1]	323.31	6.47	645.44	12.91	517.03	10.34	0.00	0.00	54.81	1.10	54.81	1.10	1.62	0.032	5,999.34
Oil Storage Tanks 1-4 (Hourly VOC emissions)	IFR1-4	IFR1-4	--	--	--	--	4.16	--	--	--	--	--	--	--	0.22	--	--
Oil Storage Tanks 5-14 (Hourly VOC emissions)	IFR5-14	IFR5-14	--	--	--	--	9.33	--	--	--	--	--	--	--	0.38	--	--
Oil Storage Tanks 1-14[3] (Annual VOC emissions)	IFR1-14	IFR1-14	--	--	--	--	--	50.85	--	--	--	--	--	--	--	2.63	0.054
Combustor	ECD1	ECD1	0.44	1.17	0.88	2.34	1.38	3.74	0.00	0.00	0.024	0.028	0.024	0.028	0.048	0.14	999.02
Thermal Oxidizer	TO1	TO1	3.56	15.59	2.17	9.49	0.72	3.24	0.88	3.87	0.19	0.82	0.19	0.82	0.018	0.079	107,096.46
Thermal Oxidizer	TO2	TO2	3.56	15.59	2.17	9.49	0.72	3.24	0.88	3.87	0.19	0.82	0.19	0.82	0.018	0.079	107,096.46
Thermal Oxidizer	TO3	TO3	3.56	15.59	2.17	9.49	0.72	3.24	0.88	3.87	0.19	0.82	0.19	0.82	0.018	0.079	107,096.46
Thermal Oxidizer	TO4	TO4	3.56	15.59	2.17	9.49	0.72	3.24	0.88	3.87	0.19	0.82	0.19	0.82	0.018	0.079	107,096.46
Fugitives	FUG	FUG	--	--	--	--	7.53	32.99	--	--	--	--	--	--	0.66	2.89	3,189.55
SSM Emissions	SSM	SSM	--	--	--	--	--	10.00	--	--	--	--	--	--	--	--	--
Haul Road Fugitives	ROAD	ROAD	--	--	--	--	--	--	--	--	2.76	0.0076	0.70	0.0019	--	--	--

XTO Energy, Inc.

Cowboy CDP

CONTROLLED FACILITY EMISSIONS SUMMARY

EMISSIONS SUMMARY TABLE

EMISSION SOURCE DESCRIPTION	FACILITY NUMBER	STACK NUMBER	NOx		CO		VOC (INCLUDES HAPs)		SO_2		PM		PM_{10}/ $PM_{2.5}$		HAPs		CO2e
			lb/hr	TPY	lb/hr	TPY	lb/hr	TPY	lb/hr	TPY	lb/hr	TPY	lb/hr	TPY	lb/hr	TPY	TPY
Amine Sweetener 1	AU1	TO1	Emissions represented at TO1.														
Amine Sweetener 2	AU2	TO2	Emissions represented at TO2.														
Amine Sweetener 3	AU3	TO3	Emissions represented at TO3.														
Amine Sweetener 4	AU4	TO4	Emissions represented at TO4.														
Gunbarrel Tank	GBS1	ECD1	Emissions represented at ECD1														
Produced Water Tank 1	PWTK1	ECD1	Emissions represented at ECD1														
Produced Water Tank 2	PWTK2	ECD1	Emissions represented at ECD1														
Slop Oil Tank	SOTK1	ECD1	Emissions represented at ECD1														
Slop Oil Truck Loading	SOTL	ECD1	--	--	--	--	0.69	0.0075	--	--	--	--	--	--	0.021	0.00	0.00
Emergency Generator	GEN1	GEN1	3.80	0.19	14.29	0.71	5.11	0.26	0.044	0.00	0.20	0.010	0.20	0.010	2.17	0.11	157.09
Emergency Generator	GEN2	GEN2	3.80	0.19	14.29	0.71	5.11	0.26	0.044	0.00	0.20	0.010	0.20	0.010	2.17	0.11	157.09
Emergency Generator	GEN3	GEN3	3.80	0.19	14.29	0.71	5.11	0.26	0.044	0.00	0.20	0.010	0.20	0.010	2.17	0.11	157.09
Emergency Generator	GEN4	GEN4	3.80	0.19	14.29	0.71	5.11	0.26	0.044	0.00	0.20	0.010	0.20	0.010	2.17	0.11	157.09
Malfunction Emissions	Malfunction	Malfunction	--	--	--	--	--	10.00	--	--	--	--	--	--	--	--	--

TOTAL FACILITY EMISSIONS	NOx		CO		VOC (INCLUDES HAPs)		SO_2		PM		PM_{10}/ PM_{25}		HAPs		CO2e
	lb/hr[2]	TPY	lb/hr[2]	TPY	lb/hr[2]	TPY	lb/hr[2]	TPY	lb/hr[2]	TPY	lb/hr[2]	TPY	lb/hr[2]	TPY	TPY
	547.30	**180.57**	**1066.34**	**151.59**	**1667.73**	**195.08**	**6.64**	**26.38**	**77.35**	**38.52**	**75.30**	**38.52**	**28.21**	**10.45**	**964,522.52**

[1] **The NGL/condensate overheads and cryo SSM stream can be routed to any of the flare; therefore, emissions were combined between the three flares. Since the two SSM events cannot occur simulataneously, the highest of the two stream hourly rates was used in the Total Facility Emissions.**

[2] **For all pollutants except VOC/HAP, the hourly emission rate excludes overhead SSM stream as they cannot occur at the same time and the cryo SSM stream has a higher emission rate. For VOC, the overhead SSM stream is included with the highest hourly rate. For HAP, the generators have the highest hourly rate.**

[3] **Annual VOC emissions are grouped together for IFR1 - IFR14. Worst-case annual withdrawl lossess were calculated by assuming total site throughput for each size group of IFR storage tanks and selecting the higher value to include in the total annual VOC emissions.**

XTO Energy, Inc.

Cowboy CDP

UNCONTROLLED FACILITY EMISSIONS SUMMARY

UNCONTROLLED EMISSIONS SUMMARY TABLE

EMISSION SOURCE DESCRIPTION	FACILITY IDENTIFICATION NUMBER	STACK NUMBER	NOx		CO		VOC (INCLUDES HAPs)		SO_2		TSP		PM_{10}		HAPs	
			lb/hr	TPY	lb/hr	TPY	lb/hr	TPY	lb/hr	TPY	lb/hr	TPY	lb/hr	TPY	lb/hr	TPY
Stabilization Hot Oil Heater (58.93 MMBtu/hr)	SHTR1	SHTR1	1.89	8.27	1.15	5.05	0.45	1.98	0.15	0.68	0.53	2.31	0.53	2.31	0.13	0.57
Stabilization Hot Oil Heater (58.93 MMBtu/hr)	SHTR2	SHTR2	1.89	8.27	1.15	5.05	0.45	1.98	0.15	0.68	0.53	2.31	0.53	2.31	0.13	0.57
Stabilization Hot Oil Heater (58.93 MMBtu/hr)	SHTR3	SHTR3	1.89	8.27	1.15	5.05	0.45	1.98	0.15	0.68	0.53	2.31	0.53	2.31	0.13	0.57
Stabilization Hot Oil Heater (58.93 MMBtu/hr)	SHTR4	SHTR4	1.89	8.27	1.15	5.05	0.45	1.98	0.15	0.68	0.53	2.31	0.53	2.31	0.13	0.57
Stabilization Hot Oil Heater (58.93 MMBtu/hr)	SHTR5	SHTR5	1.89	8.27	1.15	5.05	0.45	1.98	0.15	0.68	0.53	2.31	0.53	2.31	0.13	0.57
Stabilization Hot Oil Heater (58.93 MMBtu/hr)	SHTR6	SHTR6	1.89	8.27	1.15	5.05	0.45	1.98	0.15	0.68	0.53	2.31	0.53	2.31	0.13	0.57
Stabilization Hot Oil Heater w/ SCR catalyst (58.93 MMBtu/hr)	SHTR7	SHTR7	1.89	8.27	1.15	5.05	0.45	1.98	0.15	0.68	0.53	2.31	0.53	2.31	0.13	0.57
Stabilization Hot Oil Heater w/ SCR catalyst (58.93 MMBtu/hr)	SHTR8	SHTR8	1.89	8.27	1.15	5.05	0.45	1.98	0.15	0.68	0.53	2.31	0.53	2.31	0.13	0.57
Cryo Hot Oil Heater (94.54 MMBtu/hr)	CHTR1	CHTR1	3.95	13.83	1.93	6.75	0.76	2.65	0.26	0.91	0.88	3.09	0.88	3.09	0.050	0.22
Cryo Hot Oil Heater (94.54 MMBtu/hr)	CHTR2	CHTR2	3.95	13.83	1.93	6.75	0.76	2.65	0.26	0.91	0.88	3.09	0.88	3.09	0.050	0.22
Cryo Hot Oil Heater w/ SCR Catalyst (94.54 MMBtu/hr)	CHTR3	CHTR3	3.95	13.83	1.93	6.75	0.76	2.65	0.26	0.91	0.88	3.09	0.88	3.09	0.050	0.22
Cryo Hot Oil Heater w/ SCR Catalyst (94.54 MMBtu/hr)	CHTR4	CHTR4	3.95	13.83	1.93	6.75	0.76	2.65	0.26	0.91	0.88	3.09	0.88	3.09	0.050	0.22
Regen Heater (35.25 MMBtu/hr)	RHTR1	RHTR1	1.18	4.12	0.72	2.52	0.28	0.99	0.10	0.34	0.33	1.15	0.33	1.15	0.019	0.081
Regen Heater (35.25 MMBtu/hr)	RHTR2	RHTR2	1.18	4.12	0.72	2.52	0.28	0.99	0.10	0.34	0.33	1.15	0.33	1.15	0.019	0.081
Regen Heater (35.25 MMBtu/hr)	RHTR3	RHTR3	1.18	4.12	0.72	2.52	0.28	0.99	0.10	0.34	0.33	1.15	0.33	1.15	0.019	0.081
Regen Heater (35.25 MMBtu/hr)	RHTR4	RHTR4	1.18	4.12	0.72	2.52	0.28	0.99	0.10	0.34	0.33	1.15	0.33	1.15	0.019	0.081

XTO Energy, Inc.

Cowboy CDP

UNCONTROLLED FACILITY EMISSIONS SUMMARY

UNCONTROLLED EMISSIONS SUMMARY TABLE

EMISSION SOURCE DESCRIPTION	FACILITY IDENTIFICATION NUMBER	STACK NUMBER	NOx		CO		VOC (INCLUDES HAPs)		SO_2		TSP		PM_{10}		HAPs	
			lb/hr	TPY	lb/hr	TPY	lb/hr	TPY	lb/hr	TPY	lb/hr	TPY	lb/hr	TPY	lb/hr	TPY
Stabilizer Flare 1 (Dual Tip Flare) Cryo Flare 2 (Dual Tip Flare) Backup SSM/Emergency Flare 3 (Dual Tip Flare)	FL1-FL3[1]	FL1-FL3[1]	1.79	7.85	3.58	15.67	2.87	12.55	0.23	0.99	0.097	0.42	0.097	0.42	0.024	0.107
FL1-FL3 Stabilizer Overhead SSM Gas	FL1-FL3OVHD-SSM	FL1-FL3[1]	Not operating in uncontrolled emissions scenario.													
FL1-FL3 Cryo Blowdown SSM Gas	FL1-FL3OVHD-SSM	FL1-FL3[1]	Not operating in uncontrolled emissions scenario.													
Oil Storage Tanks 1-4 (Hourly VOC emissions)	IFR1-4	IFR1-4	--	--	--	--	4.16	--	--	--	--	--	--	--	0.22	--
Oil Storage Tanks 5-14 (Hourly VOC emissions)	IFR5-14	IFR5-14	--	--	--	--	9.33	--	--	--	--	--	--	--	0.38	--
Oil Storage Tanks 1-14[3] (Annual VOC emissions)	IFR1-14	IFR1-14	--	--	--	--	--	50.85	--	--	--	--	--	--	--	2.63
Combustor	ECD1[1]	ECD1[1]	0.029	0.13	0.058	0.25	0.06	0.28	0.00	0.00	0.0016	0.0069	0.0016	0.0069	0.020	0.089
Thermal Oxidizer	TO1	TO1	0.28	1.22	0.17	0.74	0.30	1.31	0.00	0.00	0.15	0.65	0.15	0.65	0.00	0.00
Thermal Oxidizer	TO2	TO2	0.28	1.22	0.17	0.74	0.30	1.31	0.00	0.00	0.15	0.65	0.15	0.65	0.00	0.00
Thermal Oxidizer	TO3	TO3	0.28	1.22	0.17	0.74	0.30	1.31	0.00	0.00	0.15	0.65	0.15	0.65	0.00	0.00
Thermal Oxidizer	TO4	TO4	0.28	1.22	0.17	0.74	0.30	1.31	0.00	0.00	0.15	0.65	0.15	0.65	0.00	0.00
Fugitives	FUG	FUG	--	--	--	--	7.53	32.99	--	--	--	--	--	--	--	--
SSM Emissions	SSM	SSM	--	--	--	--	--	10.00	--	--	--	--	--	--	--	--
Haul Road Fugitives	ROAD	ROAD	--	--	--	--	--	--	--	--	2.76	0.0076	0.70	0.00	--	--
Amine Sweetener 1	AU1	TO1	--	--	--	--	73.92	323.77	--	--	--	--	--	--	1.80	7.87
Amine Sweetener 2	AU2	TO2	--	--	--	--	73.92	323.77	--	--	--	--	--	--	1.80	7.87
Amine Sweetener 3	AU3	TO3	--	--	--	--	73.92	323.77	--	--	--	--	--	--	1.80	7.87
Amine Sweetener 4	AU4	TO4	--	--	--	--	73.92	323.77	--	--	--	--	--	--	1.80	7.87

XTO Energy, Inc.

Cowboy CDP

UNCONTROLLED FACILITY EMISSIONS SUMMARY

UNCONTROLLED EMISSIONS SUMMARY TABLE

EMISSION SOURCE DESCRIPTION	FACILITY IDENTIFICATION NUMBER	STACK NUMBER	NOx		CO		VOC (INCLUDES HAPs)		SO_2		TSP		PM_{10}		HAPs	
			lb/hr	TPY	lb/hr	TPY	lb/hr	TPY	lb/hr	TPY	lb/hr	TPY	lb/hr	TPY	lb/hr	TPY
Gunbarrel Tank	GBS1	ECD1	--	--	--	--	15.80	69.21	--	--	--	--	--	--	0.55	2.39
Produced Water Tank 1	PWTK1	ECD1	--	--	--	--	2.68	11.75	--	--	--	--	--	--	0.43	1.86
Produced Water Tank 2	PWTK2	ECD1	--	--	--	--	2.68	11.75	--	--	--	--	--	--	0.43	1.86
Slop Oil Tank	SOTK1	ECD1	--	--	--	--	57.70	252.73	--	--	--	--	--	--	1.78	7.79
Slop Oil Truck Loading	SOTL	ECD1	--	--	--	--	53.34	0.58	--	--	--	--	--	--	1.60	0.02
Emergency Generator	GEN1	GEN1	3.80	0.19	14.29	0.71	5.11	0.26	0.044	0.0022	0.20	0.010	0.20	0.010	2.17	0.11
Emergency Generator	GEN2	GEN2	3.80	0.19	14.29	0.71	5.11	0.26	0.044	0.0022	0.20	0.010	0.20	0.010	2.17	0.11
Emergency Generator	GEN3	GEN3	3.80	0.19	14.29	0.71	5.11	0.26	0.044	0.0022	0.20	0.010	0.20	0.010	2.17	0.11
Emergency Generator	GEN4	GEN4	3.80	0.19	14.29	0.71	5.11	0.26	0.044	0.0022	0.20	0.010	0.20	0.010	2.17	0.11
Malfunction Emissions	Malfunction	Malfunction	--	--	--	--	--	10.00	--	--	--	--	--	--	--	--

TOTAL FACILITY EMISSIONS	NOx		CO		VOC (INCLUDES HAPs)		SO_2		TSP		PM10		HAPs	
	lb/hr	TPY	lb/hr	TPY	lb/hr	TPY	lb/hr	TPY	lb/hr	TPY	lb/hr	TPY	lb/hr	TPY
	53.74	**151.60**	**81.28**	**99.21**	**481.24**	**1794.39**	**3.05**	**11.49**	**13.31**	**38.50**	**11.26**	**38.49**	**22.59**	**54.41**

[1] **Only includes pilot/purge gas emissions in uncontrolled scenario**

[2] **Annual VOC emissions are grouped together for IFR1 - IFR14. Worst-case annual withdrawl lossess were calculated by assuming total site throughput for each size group of IFR storage tanks and selecting the higher value to include in the total annual VOC emissions.**

XTO Energy, Inc.

Cowboy CDP

PSD MAJOR SOURCE THRESHOLD COMPARISON

PSD NESTED SOURCE CATEGORY Table 1 (20.2.74.501 NMAC)	NOx	CO	VOC (INCLUDES HAPs)	SO_2	PM	$PM_{10\ \&\ 2.5}$	H2SO4
	TPY	TPY	TPY	TPY	TPY	TPY	TPY
Fossil fuel boilers (or combination thereof) totaling more than 250 MMBtu/hr heat input	**98.64**	73.25	38.25	9.91	33.48	33.48	-
Petroleum storage transfer units, total storage capacity over 300,000 barrels	1.17	2.34	**55.70**	0.00	0.028	0.028	-
PSD Categorical Thresholds (tpy)	100	100	100	100	100	100	100
Is Project above SER?	**No**	**No**	**No**	**No**	**No**	**No**	**No**

* The PSD significant emission rate (SER) for NOx, CO, VOC, SO_2, and TSP/PM_{10}, H_2SO_4 which emits, or has the potential to emit, emissions equal to or greater than 100 TPY.

Modifications as a result of this application

XTO Energy, Inc.
Cowboy CDP
FUGITIVE EMISSIONS - Nested PSD Sources

Fossil fuel boilers (or combination thereof) totaling more than 250 MMBtu/hr heat input

Component Type	Service	Control (%)	Estimated Components Count	Hours	Factors	Total VOC Weight %[1]	VOC Emissions		
							lb/hour	lb/year	tons/year
Valves	Gas/Vapor		680	8760	0.009920	22.92%	1.55	13544.07	6.77
	Light Oil		0	8760	0.005500	99.96%	0.00	0.00	0.00
	Heavy Oil		0	8760	0.000019	99.96%	0.00	0.00	0.00
	Water/Light Oil		0	8760	0.000216	99.96%	0.00	0.00	0.00
Pump Seals	Gas/Vapor		0	8760	0.005290	22.92%	0.00	0.00	0.00
	Light Oil		0	8760	0.028660	99.96%	0.00	0.00	0.00
	Heavy Oil		0	8760	0.001130	99.96%	0.00	0.00	0.00
	Water/Light Oil		0	8760	0.000053	99.96%	0.00	0.00	0.00
Connectors	Gas/Vapor		2040	8760	0.000440	22.92%	0.21	1802.24	0.90
	Light Oil		0	8760	0.000463	99.96%	0.00	0.00	0.00
	Heavy Oil		0	8760	0.000017	99.96%	0.00	0.00	0.00
	Water/Light Oil		0	8760	0.000243	99.96%	0.00	0.00	0.00
Flanges	Gas/Vapor		1200	8760	0.000860	22.92%	0.24	2072.09	1.04
	Light Oil		0	8760	0.000243	99.96%	0.00	0.00	0.00
	Heavy Oil		0	8760	0.000001	99.96%	0.00	0.00	0.00
	Water/Light Oil		0	8760	0.000006	99.96%	0.00	0.00	0.00
Open-ended Lines	Gas/Vapor		0	8760	0.004410	22.92%	0.00	0.00	0.00
	Light Oil		0	8760	0.003090	99.96%	0.00	0.00	0.00
	Heavy Oil		0	8760	0.000309	99.96%	0.00	0.00	0.00
	Water/Light Oil		0	8760	0.000550	99.96%	0.00	0.00	0.00
Other:	Gas/Vapor		40	8760	0.019400	22.92%	0.18	1558.08	0.78
	Light Oil		0	8760	0.016500	99.96%	0.00	0.00	0.00
	Heavy Oil		0	8760	0.000068	99.96%	0.00	0.00	0.00
	Water/Light Oil		0	8760	0.030900	99.96%	0.00	0.00	0.00

Emission Component	lb/hr	lb/year	TPY
Uncontrolled VOC Emissions	2.17	18976.48	9.49

Notes:

[1] **Gas/Vapor analysis based on inlet gas. Liquid analysis based on stabilized crude oil.**

XTO Energy, Inc.
Cowboy CDP
FUGITIVE EMISSIONS - Nested PSD Sources

Petroleum storage transfer units over 300,000 bbls fugitive emissions

Component Type	Service	Control (%)	Estimated Components Count	Hours	Factors	Total VOC Weight %[1]	VOC Emissions		
							lb/hour	lb/year	tons/year
Valves	Gas/Vapor		159	8760	2.87E-05	22.92%	0.00	9	0.00
	Light Oil		1389	8760	9.48E-05	99.96%	0.13	1,153	0.58
	Heavy Oil		0	8760		99.96%	0.00	0	0.00
	Water/Light Oil		0	8760		99.96%	0.00	0	0.00
Pump Seals	Gas/Vapor		0	8760	1.43E-04	22.92%	0.00	0	0.00
	Light Oil		35	8760	1.19E-03	99.96%	0.04	367	0.18
	Heavy Oil		0	8760		99.96%	0.00	0	0.00
	Water/Light Oil		0	8760		99.96%	0.00	0	0.00
Connectors	Gas/Vapor		308	8760	9.26E-05	22.92%	0.01	57	0.03
	Light Oil		3623	8760	1.76E-05	99.96%	0.06	560	0.28
	Heavy Oil		0	8760		99.96%	0.00	0	0.00
	Water/Light Oil		0	8760		99.96%	0.00	0	0.00
Flanges	Gas/Vapor		169	8760	9.26E-05	22.92%	0.00	31	0.02
	Light Oil		239	8760	1.76E-05	99.96%	0.00	37	0.02
	Heavy Oil		0	8760		99.96%	0.00	0	0.00
	Water/Light Oil		0	8760		99.96%	0.00	0	0.00
Open-ended Lines	Gas/Vapor		0	8760		22.92%	0.00	0	0.00
	Light Oil		0	8760		99.96%	0.00	0	0.00
	Heavy Oil		0	8760		99.96%	0.00	0	0.00
	Water/Light Oil		0	8760		99.96%	0.00	0	0.00
Other:	Gas/Vapor		0	8760	2.65E-04	22.92%	0.00	0	0.00
	Light Oil		0	8760	2.87E-04	99.96%	0.00	0	0.00
	Heavy Oil		0	8760		99.96%	0.00	0	0.00
	Water/Light Oil		0	8760		99.96%	0.00	0	0.00

Emission Component	lb/hr	lb/year	TPY
Controlled VOC Emissions	0.25	2,215	1.11

Notes:

[1] **Gas/Vapor analysis based on inlet gas. Liquid analysis based on stabilized crude oil.**

XTO Energy, Inc.
Cowboy CDP
DUAL TIP FLARE SUMMARY - FL1/FL2/FL3

Flare Emissions Summary Table

Stream Source[a,b,c]	NOx			CO			Total VOC			SO_2			$PM_{10\ \&\ 2.5}$			Total HAPs		
	lb/hr	lb/day	TPY	lb/hr	lb/day	TPY	lb/hr	lb/day	TPY	lb/hr	lb/day	TPY	lb/hr	lb/day	TPY	lb/hr	lb/day	TPY
Stabilizer Overhead SSM Gas (FL1 - FL3OVHD-SSM)	165.59	331.17	3.31	330.57	661.15	6.61	1,093.54	2,187.09	21.87	0.00	0.00	0.00	8.94	17.88	0.18	15.67	31.35	0.31
Cryo Blowdown SSM Gas (FL1-FL3CRYO-SSM)	323.31	646.62	6.47	645.44	1,290.89	12.91	517.03	1,034.06	10.34	0.00	0.00	0.00	54.81	109.63	1.10	1.62	3.24	0.032
Pilot Fuel & Purge Gas Stabilizer Flare (FL1)	0.43	10.38	1.89	0.86	20.72	3.78	0.69	16.60	3.03	0.13	3.24	0.59	0.037	0.88	0.16	0.0082	0.20	0.036
Pilot Fuel & Purge Gas Cryo Flare (FL2)	0.68	16.31	2.98	1.36	32.57	5.94	1.09	26.09	4.76	0.036	0.86	0.16	0.023	0.56	0.10	0.0082	0.20	0.036
Pilot Fuel & Purge Gas Backup Flare (FL3)	0.68	16.31	2.98	1.36	32.57	5.94	1.09	26.09	4.76	0.056	1.35	0.25	0.037	0.88	0.16	0.0082	0.20	0.036
Total Emissions	**325.10**	**689.62**	**17.63**	**649.02**	**1,376.75**	**35.19**	**1,096.41**	**2,255.86**	**44.76**	**0.23**	**5.45**	**0.99**	**54.91**	**111.95**	**1.70**	**15.70**	**31.94**	**0.45**

Footnotes:
[a] SSM gas can be routed to one or any combination of the three flares. For emissions tracking purposes in accordance with the permit, XTO Energy is requesting a combined emisison limit for flaring.
[b] SSM Stabilizer Overhead Gas and Cryo Blowdown SSM events can not occur within the same 24 hour period.
[c] SSM Stabilizer Overhead Gas and Cryo Blowdown SSM events can not occur within the same 24 hour period, so XTO conservatively is assuming each can occur 1 days per year.

XTO Energy, Inc.

Cowboy CDP

STORAGE TANK EMISSIONS SUMMARY

TOTAL EMISSIONS SUMMARY

						VOC Standing Losses[3]		VOC Withdrawl Losses[3]		VOC Flash Losses		VOC Total Emissions	
FIN	**Unit Description**	**Tank Controlled (Yes/No)**	**Control Type**	**Material Throughput (bbls/day)[1]**	**Material Type**	**lb/hr**	**TPY**	**lb/hr**	**TPY**	**lb/hr**	**TPY**	**lb/hr**	**TPY**
IFR1 - IFR4	**Hourly Emissions[2] 50K BBL IFR Oil/Condensate Storage Tanks**	Yes	Internal Floating Roof	600,000	Oil/Condensate	1.81	--	2.35	--	--	--	4.16	--
IFR5 - IFR14	**Hourly Emissions[2] 100K BBL IFR Oil/Condensate Storage Tanks**	Yes	Internal Floating Roof	600,000	Oil/Condensate	7.45	--	1.88	--	--	--	9.33	--
IFR1 - IFR14	**Annual Emissions[3] 50K & 100K BBL IFR Oil/Condensate Storage Tanks**	Yes	Internal Floating Roof	600,000	Oil/Condensate	--	40.55	--	10.29	--	--	--	50.85

						VOC Working & Breathing Losses		VOC Flash Losses		VOC Total Emissions	
FIN	**Unit Description**	**Tank Controlled (Yes/No)**	**Control Type**	**Material Throughput (bbls/day)[1]**	**Material Type**	**lb/hr**	**TPY**	**lb/hr**	**TPY**	**lb/hr**	**TPY**
GBS1	**Gun Barrel Separator[4]**	Yes	Combustor	4,195	Produced Water	0.021	0.091	15.78	69.12	15.80	69.21
PWTK1	**Produced Water Tank[4]**	Yes	Combustor	2,098	Produced Water	1.81	7.91	0.88	3.84	2.68	11.75
PWTK2	**Produced Water Tank[4]**	Yes	Combustor	2,098	Produced Water	1.81	7.91	0.88	3.84	2.68	11.75
SOTK1	**Slop Tank[4]**	Yes	Combustor	16	Oil/Condensate	0.66	2.91	57.04	249.82	57.70	252.73

Footnotes:

(1) Total site oil/condensate throughput is 600,000 BBL/Day.

(2) Worst-case hourly withdrawl lossess were calculated by assuming total site throughput for each size group of IFR storage tanks.

(3) Annual VOC emissions are grouped together for IFR1 - IFR14. Worst-case annual withdrawl lossess were calculated by assuming total site throughput for each size group of IFR storage tanks and selecting the higher value to include in the total annual VOC emissions. The annual total standing losses include both 50K and 100K tanks standing emissions.

(4) Uncontrolled VOC emissions are included in this table. Controlled emission rates are shown on the Combustor emissions tables.

XTO ENERGY INC.
Cowboy CDP
IFR 1-4 TANKS EMISSIONS SUMMARY

IFR 1-4 TANK EMISSIONS

50,000 BBL Internal Floating Roof Storage Tank Emissions[1]						
Component	Standing Losses (IFR 1-4 tanks)		Withdrawl Losses (IFR 1-4 tanks)		Total S&W Losses (per tank)	
	(lb/hr)	(ton/yr)	(lb/hr)	(ton/yr)	(lb/hr)	(ton/yr)
Water	5.88E-06	2.58E-05	4.24E-05	1.86E-04	1.21E-05	5.28E-05
Hydrogen Sulfide	0.00E+00	0.00E+00	0.00E+00	0.00E+00	0.00E+00	0.00E+00
Nitrogen	0.00E+00	0.00E+00	0.00E+00	0.00E+00	0.00E+00	0.00E+00
Carbon Dioxide	2.39E-03	1.05E-02	6.90E-06	3.02E-05	5.99E-04	2.63E-03
Methane	0.00E+00	0.00E+00	0.00E+00	0.00E+00	0.00E+00	0.00E+00
Ethane	2.59E-01	1.14E+00	1.20E-03	5.26E-03	6.51E-02	2.85E-01
Propane	4.49E-01	1.97E+00	8.65E-03	3.79E-02	1.14E-01	5.01E-01
Iso-butane	2.02E-01	8.86E-01	1.11E-02	4.86E-02	5.33E-02	2.34E-01
N-butane	5.42E-01	2.37E+00	4.40E-02	1.93E-01	1.46E-01	6.41E-01
Iso-pentane	1.70E-01	7.43E-01	3.68E-02	1.61E-01	5.16E-02	2.26E-01
N-pentane	1.79E-01	7.84E-01	5.27E-02	2.31E-01	5.79E-02	2.54E-01
Cyclopentanes	0.00E+00	0.00E+00	0.00E+00	0.00E+00	0.00E+00	0.00E+00
Other Hexanes	6.71E-02	2.94E-01	4.90E-02	2.15E-01	2.90E-02	1.27E-01
n-Hexane	3.72E-02	1.63E-01	3.84E-02	1.68E-01	1.89E-02	8.28E-02
Methylcyclopentane	2.59E-02	1.13E-01	2.94E-02	1.29E-01	1.38E-02	6.05E-02
Benzene	1.54E-02	6.75E-02	2.57E-02	1.12E-01	1.03E-02	4.50E-02
Cyclohexane	4.01E-02	1.76E-01	6.48E-02	2.84E-01	2.62E-02	1.15E-01
2,2,4 Trimethylpentane	0.00E+00	0.00E+00	0.00E+00	0.00E+00	0.00E+00	0.00E+00
Other Heptanes	1.24E-02	5.43E-02	3.01E-02	1.32E-01	1.06E-02	4.65E-02
Methylcyclohexane	2.57E-02	1.13E-01	8.91E-02	3.90E-01	2.87E-02	1.26E-01
n-Heptane	1.70E-02	7.45E-02	6.04E-02	2.65E-01	1.94E-02	8.48E-02
Toluene	8.67E-03	3.80E-02	4.99E-02	2.19E-01	1.47E-02	6.42E-02
Octanes	9.54E-03	4.18E-02	1.25E-01	5.48E-01	3.37E-02	1.47E-01
Ethylbenzene	1.77E-04	7.74E-04	3.16E-03	1.38E-02	8.35E-04	3.66E-03
M&P-Xylene	1.78E-03	7.80E-03	3.65E-02	1.60E-01	9.58E-03	4.20E-02
Nonanes	2.64E-03	1.15E-02	1.30E-01	5.70E-01	3.32E-02	1.45E-01
Decanes	7.38E-04	3.23E-03	1.31E-01	5.73E-01	3.29E-02	1.44E-01
Undecanes Plus	3.79E-07	1.66E-06	1.33E+00	5.84E+00	3.34E-01	1.46E+00
Total	2.07	9.06	2.35	10.30	**1.10**	**4.84**
Total VOC	1.81	7.91	2.35	10.29	**1.04**	**4.55**
Total HAP	0.063	0.28	0.15	0.67	**0.054**	**0.24**

IFR 1-4 Tank Information		
Number of Tanks	4	--
Tank Size	50,000	BBL
Control Device	IFR	--
Total Oil/Condensate Throughput IFR1-4[2]	600,000	BBL/Day

Footnotes:

(1) Uncontrolled stream properties determined via ProMax.

(2) Total site oil/condensate throughput is 600,000 BBL/Day. Worst-case working losses for all IFR tanks at the site was calculated by conservatively assuming 1) total site throughput through the four (4) 50,000 BBL IFRs, 2) total site throughput through the ten (10) 100,000 BBL IFRs, and 3) selecting the higher value to represent worst-case working losses.

XTO ENERGY INC.
Cowboy CDP
IFR 5-14 TANKS EMISSION SUMMARY

IFR 5-14 TANK EMISSIONS

100,000 BBL Internal Floating Roof Storage Tank Emissions[1]						
Component	Standing Losses (IFR 5-14 tanks)		Withdrawl Losses (IFR 5-14 tanks)		Total S&W Losses (per tank)	
	(lb/hr)	(ton/yr)	(lb/hr)	(ton/yr)	(lb/hr)	(ton/yr)
Water	2.43E-05	1.06E-04	3.38E-05	1.48E-04	5.81E-06	2.54E-05
Hydrogen Sulfide	0.00E+00	0.00E+00	0.00E+00	0.00E+00	0.00E+00	0.00E+00
Nitrogen	0.00E+00	0.00E+00	0.00E+00	0.00E+00	0.00E+00	0.00E+00
Carbon Dioxide	9.87E-03	4.32E-02	5.51E-06	2.41E-05	9.87E-04	4.32E-03
Methane	0.00E+00	0.00E+00	0.00E+00	0.00E+00	0.00E+00	0.00E+00
Ethane	1.07E+00	4.69E+00	9.60E-04	4.20E-03	1.07E-01	4.69E-01
Propane	1.85E+00	8.12E+00	6.91E-03	3.03E-02	1.86E-01	8.15E-01
Iso-butane	8.35E-01	3.66E+00	8.86E-03	3.88E-02	8.43E-02	3.69E-01
N-butane	2.24E+00	9.79E+00	3.51E-02	1.54E-01	2.27E-01	9.94E-01
Iso-pentane	7.00E-01	3.07E+00	2.94E-02	1.29E-01	7.29E-02	3.19E-01
N-pentane	7.38E-01	3.23E+00	4.21E-02	1.84E-01	7.80E-02	3.42E-01
Cyclopentanes	0.00E+00	0.00E+00	0.00E+00	0.00E+00	0.00E+00	0.00E+00
Other Hexanes	2.77E-01	1.21E+00	3.91E-02	1.71E-01	3.16E-02	1.38E-01
n-Hexane	1.53E-01	6.72E-01	3.07E-02	1.34E-01	1.84E-02	8.07E-02
Methylcyclopentane	1.07E-01	4.67E-01	2.35E-02	1.03E-01	1.30E-02	5.70E-02
Benzene	6.36E-02	2.78E-01	2.05E-02	8.98E-02	8.41E-03	3.68E-02
Cyclohexane	1.65E-01	7.24E-01	5.18E-02	2.27E-01	2.17E-02	9.51E-02
2,2,4 Trimethylpentane	0.00E+00	0.00E+00	0.00E+00	0.00E+00	0.00E+00	0.00E+00
Other Heptanes	5.11E-02	2.24E-01	2.40E-02	1.05E-01	7.52E-03	3.29E-02
Methylcyclohexane	1.06E-01	4.64E-01	7.12E-02	3.12E-01	1.77E-02	7.76E-02
n-Heptane	7.02E-02	3.07E-01	4.83E-02	2.11E-01	1.18E-02	5.19E-02
Toluene	3.58E-02	1.57E-01	3.99E-02	1.75E-01	7.57E-03	3.31E-02
Octanes	3.94E-02	1.72E-01	9.99E-02	4.38E-01	1.39E-02	6.10E-02
Ethylbenzene	7.29E-04	3.19E-03	2.53E-03	1.11E-02	3.25E-04	1.43E-03
M&P-Xylene	7.35E-03	3.22E-02	2.92E-02	1.28E-01	3.65E-03	1.60E-02
Nonanes	1.09E-02	4.76E-02	1.04E-01	4.55E-01	1.15E-02	5.03E-02
Decanes	3.04E-03	1.33E-02	1.05E-01	4.58E-01	1.08E-02	4.71E-02
Undecanes Plus	1.56E-06	6.84E-06	1.07E+00	4.67E+00	1.07E-01	4.67E-01
Total	8.53	37.37	1.88	8.23	**1.04**	**4.56**
Total VOC	7.45	32.64	1.88	8.22	**0.93**	**4.09**
Total HAP	0.26	1.14	0.12	0.54	**0.038**	**0.17**

IFR 5-14 Tank Information		
Number of Tanks	10	--
Tank Size	100,000	BBL
Control Device	IFR	--
Total Oil/Condensate Throughput IFR5-14[2]	600,000	BBL/Day

Footnotes:

(1) Uncontrolled stream properties determined via ProMax.

(2) Total site oil/condensate throughput is 600,000 BBL/Day. Worst-case working losses for all IFR tanks at the site was calculated by conservatively assuming 1) total site throughput through the four (4) 50,000 BBL IFRs, 2) total site throughput through the ten (10) 100,000 BBL IFRs, and 3) selecting the higher value to represent worst-case working losses.

XTO Energy, Inc.
Cowboy CDP
FUGITIVE EMISSIONS - VOCs

Facility Fugitive Component Information

Component Type	Service	Estimated Components Total Count[1]	Hours
Valves	Gas/Vapor	5658	8760
	Light Oil	3431	8760
	Heavy Oil	200	8760
	Water/Light Oil	0	8760
Pump Seals	Gas/Vapor	0	8760
	Light Oil	35	8760
	Heavy Oil	0	8760
	Water/Light Oil	0	8760
Connectors	Gas/Vapor	16805	8760
	Light Oil	9749	8760
	Heavy Oil	0	8760
	Water/Light Oil	1400	8760
Flanges	Gas/Vapor	1569	8760
	Light Oil	1339	8760
	Heavy Oil	0	8760
	Water/Light Oil	0	8760
Open-ended Lines	Gas/Vapor	0	8760
	Light Oil	0	8760
	Heavy Oil	0	8760
	Water/Light Oil	0	8760
Other:	Gas/Vapor	0	8760
	Light Oil	0	8760
	Heavy Oil	0	8760
	Water/Light Oil	0	8760

Notes:

[1] **Estimated components include both Natural Gas Processing Facility and Petroleum Storage Transfer Units.**

Uncontrolled VOC Emissions Total

Emission Component (Natural Gas Processing Facility & Petroleum Storage Transfer Units)	lb/hr	lb/year	TPY
Uncontrolled VOC Emissions	7.53	65,977.60	32.99

XTO Energy, Inc.
Cowboy CDP
FUGITIVE EMISSIONS - VOCs

Natural Gas Processing Facility Uncontrolled VOC Emissions[2]

Component Type	Service	Control (%)	Estimated Components Count	Hours	Factors	Total VOC Weight %[1]	VOC Emissions		
							lb/hour	lb/year	tons/year
Valves	Gas/Vapor	75%	5499	8760	0.009920	22.92%	3.13	27,381.93	13.69
	Light Oil	75%	2042	8760	0.005500	99.96%	2.81	24,585.92	12.29
	Heavy Oil	75%	200	8760	0.000019	99.96%	0.00	8.32	0.00
	Water/Light Oil	75%	0	8760	0.000216	99.96%	0.00	0	0.00
Pump Seals	Gas/Vapor	75%	0	8760	0.005290	22.92%	0.00	0	0.00
	Light Oil	75%	0	8760	0.028660	99.96%	0.00	0	0.00
	Heavy Oil	75%	0	8760	0.001130	99.96%	0.00	0	0.00
	Water/Light Oil	75%	0	8760	0.000053	99.96%	0.00	0	0.00
Connectors	Gas/Vapor	75%	16497	8760	0.000440	22.92%	0.42	3,643.56	1.82
	Light Oil	75%	6126	8760	0.000463	99.96%	0.71	6,209.06	3.10
	Heavy Oil	75%	0	8760	0.000017	99.96%	0.00	0	0.00
	Water/Light Oil	75%	1400	8760	0.000243	99.96%	0.09	744.74	0.37
Flanges	Gas/Vapor	75%	1400	8760	0.000860	22.92%	0.07	604.36	0.30
	Light Oil	75%	1100	8760	0.000243	99.96%	0.07	585.15	0.29
	Heavy Oil	75%	0	8760	0.000001	99.96%	0.00	0	0.00
	Water/Light Oil	75%	0	8760	0.000006	99.96%	0.00	0	0.00
Open-ended Lines	Gas/Vapor	75%	0	8760	0.004410	22.92%	0.00	0	0.00
	Light Oil	75%	0	8760	0.003090	99.96%	0.00	0	0.00
	Heavy Oil	75%	0	8760	0.000309	99.96%	0.00	0	0.00
	Water/Light Oil	75%	0	8760	0.000550	99.96%	0.00	0	0.00
Other:	Gas/Vapor	75%	0	8760	0.019400	22.92%	0.00	0	0.00
	Light Oil	75%	0	8760	0.016500	99.96%	0.00	0	0.00
	Heavy Oil	75%	0	8760	0.000068	99.96%	0.00	0	0.00
	Water/Light Oil	75%	0	8760	0.030900	99.96%	0.00	0	0.00

Emission Component	lb/hr	lb/year	TPY
Controlled VOC Emissions	7.28	63763.04	31.88

Notes:

[1] Gas/Vapor analysis based on inlet gas. Liquid analysis based on stabilized crude oil.

XTO Energy, Inc.
Cowboy CDP
FUGITIVE EMISSIONS - VOCs

Petroleum Storage Transfer Unit Uncontrolled VOC emissions

Component Type	Service	Control (%)	Estimated Components Count	Hours	Factors	Total VOC Weight %[1]	VOC Emissions		
							lb/hour	lb/year	tons/year
Valves	Gas/Vapor		159	8760	2.87E-05	22.92%	0.00	9.16	0.00
	Light Oil		1389	8760	9.48E-05	99.96%	0.13	1153.26	0.58
	Heavy Oil		0	8760		99.96%	0.00	0.00	0.00
	Water/Light Oil		0	8760		99.96%	0.00	0.00	0.00
Pump Seals	Gas/Vapor		0	8760	1.43E-04	22.92%	0.00	0.00	0.00
	Light Oil		35	8760	1.19E-03	99.96%	0.042	366.94	0.18
	Heavy Oil		0	8760		99.96%	0.00	0.00	0.00
	Water/Light Oil		0	8760		99.96%	0.00	0.00	0.00
Connectors	Gas/Vapor		308	8760	9.26E-05	22.92%	0.0065	57.26	0.029
	Light Oil		3623	8760	1.76E-05	99.96%	0.064	559.59	0.28
	Heavy Oil		0	8760		99.96%	0.00	0.00	0.00
	Water/Light Oil		0	8760		99.96%	0.00	0.00	0.00
Flanges	Gas/Vapor		169	8760	9.26E-05	22.92%	0.0036	31.49	0.016
	Light Oil		239	8760	1.76E-05	99.96%	0.00	36.86	0.018
	Heavy Oil		0	8760		99.96%	0.00	0.00	0.00
	Water/Light Oil		0	8760		99.96%	0.00	0.00	0.00
Open-ended Lines	Gas/Vapor		0	8760		22.92%	0.00	0.00	0.00
	Light Oil		0	8760		99.96%	0.00	0.00	0.00
	Heavy Oil		0	8760		99.96%	0.00	0.00	0.00
	Water/Light Oil		0	8760		99.96%	0.00	0.00	0.00
Other:	Gas/Vapor		0	8760	2.65E-04	22.92%	0.00	0.00	0.00
	Light Oil		0	8760	2.87E-04	99.96%	0.00	0.00	0.00
	Heavy Oil		0	8760		99.96%	0.00	0.00	0.00
	Water/Light Oil		0	8760		99.96%	0.00	0.00	0.00

Emission Component	lb/hr	lb/year	TPY
Uncontrolled VOC Emissions	0.25	2214.56	1.11

Notes:

[1] **Gas/Vapor analysis based on slop oil vapors. Liquid analysis based on stabilized crude oil.**

XTO Energy, Inc.
Cowboy CDP
FUGITIVE EMISSIONS - HAPs

Uncontrolled HAP Emissions Total

Component Type	Service	Control (%)	Estimated Components Total Count	Hours	Factors (Natural Gas Processing Facility)	Factors (Petroleum Storage Transfer Units)	Emissions (Natural Gas Processing Facility & Petroleum Storage Transfer Units)		
							lb/hour	lb/year	tons/year
Valves	Gas/Vapor		5658	8760	0.00992000	0.00002866	0.039	343.91	0.172
	Light Oil		3431	8760	0.00550000	0.00009480	0.466	4083.44	2.042
	Heavy Oil		200	8760	0.00001900	-	0.000	1.37	0.001
	Water/Light Oil		0	8760	0.00021600	-	0.000	0.00	0.000
Pump Seals	Gas/Vapor		0	8760	0.00529000	0.00014330	0.000	0.00	0.000
	Light Oil		35.2	8760	0.02866000	0.00119049	0.002	15.06	0.008
	Heavy Oil		0	8760	0.00113000	-	0.000	0.00	0.000
	Water/Light Oil		0	8760	0.00005300	-	0.000	0.00	0.000
Connectors	Gas/Vapor		16805	8760	0.00044000	0.00009259	0.006	52.83	0.026
	Light Oil		9749	8760	0.00046300	0.00001764	0.119	1042.27	0.521
	Heavy Oil		0	8760	0.00001700	-	0.000	0.00	0.000
	Water/Light Oil		1400	8760	0.00024300	-	0.014	122.26	0.061
Flanges	Gas/Vapor		1569	8760	0.00086000	0.00009259	0.001	11.53	0.006
	Light Oil		1339	8760	0.00024300	0.00001764	0.011	97.57	0.049
	Heavy Oil		0	8760	0.00000086	-	0.000	0.00	0.000
	Water/Light Oil		0	8760	0.00000620	-	0.000	0.00	0.000
Open-ended Lines	Gas/Vapor		0	8760	0.00441000	-	0.000	0.00	0.000
	Light Oil		0	8760	0.00309000	-	0.000	0.00	0.000
	Heavy Oil		0	8760	0.00030900	-	0.000	0.00	0.000
	Water/Light Oil		0	8760	0.00055000	-	0.000	0.00	0.000
Other:	Gas/Vapor		0	8760	0.01940000	0.00026455	0.000	0.00	0.000
	Light Oil		0	8760	0.01650000	0.00028660	0.000	0.00	0.000
	Heavy Oil		0	8760	0.00006800	-	0.000	0.00	0.000
	Water/Light Oil		0	8760	0.03090000	-	0.000	0.00	0.000

Emission Component	lb/hr	lb/year	TPY
Total HAPs	0.66	5770.24	2.89

XTO Energy, Inc.
Cowboy CDP
FUGITIVE EMISSIONS - HAPs

Natural Gas Processing Facility Uncontrolled VOC Emissions

Component Type	Service	Control (%)	Estimated Components Count	Hours	Factors	Total HAPs Weight %[1]	Emissions		
							lb/hour	lb/year	tons/year
Valves	Gas/Vapor		5499	8760	0.00992000	0.07%	0.039	342.76	0.171
	Light Oil		2042	8760	0.00550000	4.10%	0.461	4036.11	2.018
	Heavy Oil		200	8760	0.00001900	4.10%	0.000	1.37	0.001
	Water/Light Oil		0	8760	0.00021600	4.10%	0.000	0.00	0.000
Pump Seals	Gas/Vapor		0	8760	0.00529000	0.07%	0.000	0.00	0.000
	Light Oil		0	8760	0.02866000	4.10%	0.000	0.00	0.000
	Heavy Oil		0	8760	0.00113000	4.10%	0.000	0.00	0.000
	Water/Light Oil		0	8760	0.00005300	4.10%	0.000	0.00	0.000
Connectors	Gas/Vapor		16497	8760	0.00044000	0.07%	0.005	45.61	0.023
	Light Oil		6126	8760	0.00046300	4.10%	0.116	1019.30	0.510
	Heavy Oil		0	8760	0.00001700	4.10%	0.000	0.00	0.000
	Water/Light Oil		1400	8760	0.00024300	4.10%	0.014	122.26	0.061
Flanges	Gas/Vapor		1400	8760	0.00086000	0.07%	0.001	7.57	0.004
	Light Oil		1100	8760	0.00024300	4.10%	0.011	96.06	0.048
	Heavy Oil		0	8760	0.00000086	4.10%	0.000	0.00	0.000
	Water/Light Oil		0	8760	0.00000620	4.10%	0.000	0.00	0.000
Open-ended Lines	Gas/Vapor		0	8760	0.00441000	0.07%	0.000	0.00	0.000
	Light Oil		0	8760	0.00309000	4.10%	0.000	0.00	0.000
	Heavy Oil		0	8760	0.00030900	4.10%	0.000	0.00	0.000
	Water/Light Oil		0	8760	0.00055000	4.10%	0.000	0.00	0.000
Other:	Gas/Vapor		0	8760	0.01940000	0.07%	0.000	0.00	0.000
	Light Oil		0	8760	0.01650000	4.10%	0.000	0.00	0.000
	Heavy Oil		0	8760	0.00006800	4.10%	0.000	0.00	0.000
	Water/Light Oil		0	8760	0.03090000	4.10%	0.000	0.00	0.000

Emission Component	lb/hr	lb/year	TPY
Total HAPs	0.65	5671.03	2.84

Notes:

[1] **Gas/Vapor analysis based on inlet gas. Liquid analysis based on stabilized crude oil.**

XTO Energy, Inc.
Cowboy CDP
FUGITIVE EMISSIONS - HAPs

Petroleum Storage Transfer Unit Uncontrolled VOC emissions

Component Type	Service	Control (%)	Estimated Components Count	Hours	Factors	Total HAPs Weight %[1]	Emissions		
							lb/hour	lb/year	tons/year
Valves	Gas/Vapor		159	8760	0.00002866	2.89%	0.000	1.15	0.001
	Light Oil		1389	8760	0.00009480	4.10%	0.005	47.33	0.024
	Heavy Oil		0	8760		4.10%	0.000	0.00	0.000
	Water/Light Oil		0	8760		4.10%	0.000	0.00	0.000
Pump Seals	Gas/Vapor		0	8760	0.00014330	2.89%	0.000	0.00	0.000
	Light Oil		35	8760	0.00119049	4.10%	0.002	15.06	0.008
	Heavy Oil		0	8760		4.10%	0.000	0.00	0.000
	Water/Light Oil		0	8760		4.10%	0.000	0.00	0.000
Connectors	Gas/Vapor		308	8760	0.00009259	2.89%	0.001	7.22	0.004
	Light Oil		3623	8760	0.00001764	4.10%	0.003	22.97	0.011
	Heavy Oil		0	8760		4.10%	0.000	0.00	0.000
	Water/Light Oil		0	8760		4.10%	0.000	0.00	0.000
Flanges	Gas/Vapor		169	8760	0.00009259	2.89%	0.000	3.97	0.002
	Light Oil		239	8760	0.00001764	4.10%	0.000	1.51	0.001
	Heavy Oil		0	8760		4.10%	0.000	0.00	0.000
	Water/Light Oil		0	8760		4.10%	0.000	0.00	0.000
Open-ended Lines	Gas/Vapor		0	8760		2.89%	0.000	0.00	0.000
	Light Oil		0	8760		4.10%	0.000	0.00	0.000
	Heavy Oil		0	8760		4.10%	0.000	0.00	0.000
	Water/Light Oil		0	8760		4.10%	0.000	0.00	0.000
Other:	Gas/Vapor		0	8760	0.00026455	2.89%	0.000	0.00	0.000
	Light Oil		0	8760	0.00028660	4.10%	0.000	0.00	0.000
	Heavy Oil		0	8760		4.10%	0.000	0.00	0.000
	Water/Light Oil		0	8760		4.10%	0.000	0.00	0.000

Emission Component	lb/hr	lb/year	TPY
Total HAPs	0.011	99.21	0.050

Notes:

[1] **Gas/Vapor analysis based on slop oil tank vapors. Liquid analysis based on stabilized crude oil.**

XTO Energy, Inc.
Cowboy CDP
FUGITIVE GREENHOUSE GAS EMISSIONS

Uncontrolled Emissions

Component Type	Service	Estimated Components Count	Hours	Factors	Total CH4 Weight %	Total CO2 Weight %	CH4 Emissions[1] tons/year	CO2 Emissions[2] tons/year
Valves	Gas/Vapor	5658	8760	0.00992070	55.11%	0.23%	110.37	0.47
	Light Oil	3431	8760	0.00550000	0.00%	0.00%	0.00	0.00
	Heavy Oil	200	8760	0.00001900	0.00%	0.00%	0.00	0.00
	Water/Light Oil	0	8760	0.00021600	0.00%	0.00%	0.00	0.00
Pump Seals	Gas/Vapor	0	8760	0.00529000	55.11%	0.23%	0.00	0.00
	Light Oil	35	8760	0.02866000	0.00%	0.00%	0.00	0.00
	Heavy Oil	0	8760	0.00113000	0.00%	0.00%	0.00	0.00
	Water/Light Oil	0	8760	0.00005300	0.00%	0.00%	0.00	0.00
Connectors	Gas/Vapor	16805	8760	0.00044000	55.11%	0.23%	14.54	0.06
	Light Oil	9749	8760	0.00046300	0.00%	0.00%	0.00	0.00
	Heavy Oil	0	8760	0.00001700	0.00%	0.00%	0.00	0.00
	Water/Light Oil	1400	8760	0.00024300	0.00%	0.00%	0.00	0.00
Flanges	Gas/Vapor	1569	8760	0.00086000	55.11%	0.23%	2.65	0.01
	Light Oil	1339	8760	0.00024300	0.00%	0.00%	0.00	0.00
	Heavy Oil	0	8760	0.00000086	0.00%	0.00%	0.00	0.00
	Water/Light Oil	0	8760	0.00000620	0.00%	0.00%	0.00	0.00
Open-ended Lines	Gas/Vapor	0	8760	0.00441000	55.11%	0.23%	0.00	0.00
	Light Oil	0	8760	0.00309000	0.00%	0.00%	0.00	0.00
	Heavy Oil	0	8760	0.00030900	0.00%	0.00%	0.00	0.00
	Water/Light Oil	0	8760	0.00055000	0.00%	0.00%	0.00	0.00
Other:	Gas/Vapor	0	8760	0.01940000	55.11%	0.23%	0.00	0.00
	Light Oil	0	8760	0.01650000	0.00%	0.00%	0.00	0.00
	Heavy Oil	0	8760	0.00006800	0.00%	0.00%	0.00	0.00
	Water/Light Oil	0	8760	0.03090000	0.00%	0.00%	0.00	0.00

Emission Component	CH_4 TPY	CO_2 TPY
Uncontrolled Emissions	127.56	0.54

Notes:

[1] **CH4 emissions were calculated as follow: TOC lb/hr * CH4 weight % = CH4 lb/hr.**

[2] **CO2 emissions are based ratio of CH4 weight % to CO2 weight % per Exhibit 6.1 of API Compendium of Greenhouse Gas Emission Methodologies for the Oil and Natural Gas Industry; August 2009.**

Not changing as a result of this application

XTO Energy, Inc.

Cowboy CDP

Truck Loading Losses - Slop Oil

Truck Loading Losses Calculations

Average BOPD	**210**
Average BOPY	**5704**

LL= 12.46 * SPM/T * (1-EFF/100)

Saturation Factor (S) =	0.6
Average True Vapor Pressure of liquid loaded (P)[a] =	6.55
Maximum True Vapor Pressure of liquid loaded (P)[a] =	7.72
Average Temperature of liquid loaded in Rankin (T) =	535.8
Maximum Temperature of liquid loaded in Rankin (T) =	501.3
Molecular Weight (M)[a] =	54.55
Uncontrolled LL-Average (lb Total HC / bbl Throughput) =	0.2094
Uncontrolled LL-Maximum (lb Total HC / bbl Throughput) =	0.2638
Uncontrolled LL-Average (lb VOC / bbl Throughput) =	**0.2016**
Uncontrolled LL-Maximum (lb VOC / bbl Throughput) =	**0.2540**
Estimated Throughput (bbls/Year) =	5704
Truck Loading Rate (bbls/hour) =	210
Estimated # of Loads (Approximately 1 hr/Load) =	27

Total Uncontrolled Loading Emissions[b]

	lb/hr	TPY
Total Hydrocarbon Emissions	55.40	0.60
Total VOC Emissions	53.34	0.58
Total HAP Emissions	1.60	0.02

Uncollected Emissions Released at Rack[c]

	lb/hr	TPY
Total VOC Emissions	0.69	0.01
Total HAP Emissions	0.02	0.00

XTO Energy, Inc.

Cowboy CDP

Truck Loading Losses - Slop Oil

Truck Loading Losses Calculations

Component	Total Uncontrolled Speciated Vapors		Uncollected Emissions Released at Rack[c]		Uncontrolled Speciated Vapors Collected to Combustor[d]	
	lb / hr	ton / year	lb / hr	ton / year	lb / hr	ton / year
Water	0.00	0.00	0.00	0.00	0.00	0.00
Hydrogen Sulfide	0.00	0.00	0.00	0.00	0.00	0.00
Nitrogen	0.00	0.00	0.00	0.00	0.00	0.00
Carbon Dioxide	0.02	0.00	0.00	0.00	0.02	0.00
Methane	0.03	0.00	0.00	0.00	0.03	0.00
Ethane	2.02	0.02	0.03	0.00	1.99	0.02
Propane	18.12	0.20	0.24	0.00	17.88	0.19
Iso-butane	5.40	0.06	0.07	0.00	5.33	0.06
N-butane	14.13	0.15	0.18	0.00	13.94	0.15
Iso-pentane	4.25	0.05	0.06	0.00	4.19	0.05
N-pentane	4.57	0.05	0.06	0.00	4.51	0.05
Cyclopentanes	0.00	0.00	0.00	0.00	0.00	0.00
Other Hexanes	1.81	0.02	0.02	0.00	1.78	0.02
n-Hexane	1.05	0.01	0.01	0.00	1.04	0.01
Methylcyclopentane	0.72	0.01	0.01	0.00	0.71	0.01
Benzene	0.33	0.00	0.00	0.00	0.32	0.00
Cyclohexane	1.06	0.01	0.01	0.00	1.05	0.01
2,2,4 Trimethylpentane	0.00	0.00	0.00	0.00	0.00	0.00
Other Heptanes	0.36	0.00	0.00	0.00	0.36	0.00
Methylcyclohexane	0.68	0.01	0.01	0.00	0.67	0.01
n-Heptane	0.41	0.00	0.01	0.00	0.40	0.00
Toluene	0.19	0.00	0.00	0.00	0.18	0.00
Octanes	0.19	0.00	0.00	0.00	0.19	0.00
Ethylbenzene	0.00	0.00	0.00	0.00	0.00	0.00
M&P-Xylene	0.03	0.00	0.00	0.00	0.03	0.00
Nonanes	0.04	0.00	0.00	0.00	0.04	0.00
Decanes	0.01	0.00	0.00	0.00	0.01	0.00
Undecanes Plus	0.00	0.00	0.00	0.00	0.00	0.00
Total	55.40	0.60	0.72	0.008	54.68	0.59
Total VOC	53.34	0.58	0.69	0.007	52.65	0.57
Total HAP	1.60	0.02	0.02	0.00	1.58	0.02

[a] Molecular Weight and VOC/HAP weight percent were obtained from Promax

[b] Loading emissions include total hydrocarbons as calculated using AP-42, Section 5.2.

[c] 98.7% of the vapors are collected and routed to the combustor. The remaining 1.3% is illustrated as truck loading emissions.

[d] The component speciation was obtained from Promax (Slop Tank W&B) and multiplied by the total hydrocarbon emissions. (VOC = 55.4 lb/hr * 98. 7% = 54.68 lb/hr)

XTO Energy, Inc.
Cowboy CDP
Generators (GEN1 - GEN4)

Uncontrolled Emissions Calculations

					Manufacturer's Data g/hp-hr				AP-42 Factors lb/MMBtu				lb/hr									tpy								
Source ID	Unit Description	Yearly Operating Hours	Rated HP	MMbtu/hp-hr[1]	NOx	CO	VOC[2]	HCHO	SO_2[3]	$PM_{10\ \&\ 2.5}$[4]	Hexane	Aceta-ldehyde	NOx	CO	VOC	HCHO	SO_2	$PM_{10\ \&\ 2.5}$	Hexane	Aceta-ldehyde	HAPs	NOx	CO	VOC	HCHO	SO_2	$PM_{10\ \&\ 2.5}$	Hexane	Aceta-ldehyde	HAPs
GEN1	Caterpillar G3520H Emergency Generator	100	3448	0.005861	0.50	1.88	0.65	0.26	0.00216	0.01006	0.00111	0.00836	3.80	14.29	5.11	1.98	0.04	0.20	0.02	0.17	2.17	0.19	0.71	0.26	0.10	0.00	0.01	0.00	0.01	0.11
GEN2	Caterpillar G3520H Emergency Generator	100	3448	0.005861	0.50	1.88	0.65	0.26	0.00216	0.01006	0.00111	0.00836	3.80	14.29	5.11	1.98	0.04	0.20	0.02	0.17	2.17	0.19	0.71	0.26	0.10	0.00	0.01	0.00	0.01	0.11
GEN3	Caterpillar G3520H Emergency Generator	100	3448	0.005861	0.50	1.88	0.65	0.26	0.00216	0.01006	0.00111	0.00836	3.80	14.29	5.11	1.98	0.04	0.20	0.02	0.17	2.17	0.19	0.71	0.26	0.10	0.00	0.01	0.00	0.01	0.11
GEN4	Caterpillar G3520H Emergency Generator	100	3448	0.005861	0.50	1.88	0.65	0.26	0.00216	0.01006	0.00111	0.00836	3.80	14.29	5.11	1.98	0.04	0.20	0.02	0.17	2.17	0.19	0.71	0.26	0.10	0.00	0.01	0.00	0.01	0.11

[1]Fuel Consumption Rate @ 100% Load from the Gas Engine Rating Pro Report

[2]Emission Factor Includes HCHO

[3]SO_2 Emissions were calculated based on 0.75 gr S/100 scf

[4]PM Emission Factor = Sum of all PM factors in AP-42.

Total Emissions Per Pollutant (TPY)	NOx	CO	VOC	HCHO	SO_2	$PM_{10\ \&\ 2.5}$	Hexane	Aceta-ldehyde	HAPs
	0.76	**2.86**	**1.02**	**0.40**	**0.0087**	**0.041**	**0.0045**	**0.034**	**0.43**

XTO Energy, Inc.
Cowboy CDP
Greenhouse Gas Emissions - Generators (GEN1 - GEN4)

Emission unit number(s):	GEN1-GEN4		
Source description:	Emergency Generators		
Fuel Consumption			
Input heat rate:	20.21	MMBtu/hr	Fired Capacity
Fuel heat value (LHV):	1171	Btu/scf	Field Gas
Fuel rate:	17251.7	scf/hr	Input heat rate / fuel heat value
Annual fuel usage:	151.1	MMscf/yr	8760 hrs/yr operation
Hours per year:	100	hrs/yr each	
Exhaust Parameters			
Heat Rate:	20208.728	MBtu/hr	
Exhaust temp (Tstk):	736	°F	Manufacturer
Stack diameter:	1.00	ft	Manufacturer
Stack height:	14	ft	Manufacturer
Exhaust velocity:	331.40	ft/sec	Manufacturer

Emission Rates

Engine Output: 3448 horsepower

GHG Emissions	CO_2	CH4	CH_4 as CO_2e	N_2O	N_2O as CO_2e	Total CO_2e	
	413	0.002	0.055	0.0002	0.066		lb/MMbtu
	3139.45	0.045	1.11	0.004	1.33	3141.89	lb/hr
	156.97	0.00	0.06	0.00	0.07	157.09	tpy (8760 hrs)

1 CO2 factor provided by engine manufacturer

2 40 CFR 98 Emission Factors. Global warming potential of 25 for CH4 and 298 for N20.

XTO Energy, Inc.

Cowboy CDP

BURNER CALCULATIONS

CRITERIA & REGULATED POLLUTANTS

					Manufacturer's Data (NOx, CO, VOC) and AP-42 Factors (SO2, PM)[1,2]					lb/hr[1,3]					tpy[2,3]				
Source ID	Source Description	Fuel Gas LHV Design Case (BTU/SCF)	Operating Hours	Burner Design Case (MMBTU/Hr)	NOx (lb/MMBtu)	CO (lb/MMBtu)	VOC (lb/MMBtu)	SO_2 (lb/MMscf)	$PM_{10 \& 2.5}$ (lb/MMscf)	NOx	CO	VOC	SO_2	$PM_{10 \& 2.5}$	NOx	CO	VOC	SO_2	$PM_{10 \& 2.5}$
SHTR1	Stabilization Hot Oil Heater (58.93 MMBtu/hr)	993.0	8760	58.93	0.0267	0.0163	0.0064	2.25	7.6	1.89	1.15	0.45	0.15	0.53	8.27	5.05	1.98	0.68	2.31
SHTR2	Stabilization Hot Oil Heater (58.93 MMBtu/hr)	993.0	8760	58.93	0.0267	0.0163	0.0064	2.25	7.6	1.89	1.15	0.45	0.16	0.53	8.27	5.05	1.98	0.68	2.31
SHTR3	Stabilization Hot Oil Heater (58.93 MMBtu/hr)	993.0	8760	58.93	0.0267	0.0163	0.0064	2.25	7.6	1.89	1.15	0.45	0.16	0.53	8.27	5.05	1.98	0.68	2.31
SHTR4	Stabilization Hot Oil Heater (58.93 MMBtu/hr)	993.0	8760	58.93	0.0267	0.0163	0.0064	2.25	7.6	1.97	1.20	0.47	0.16	0.55	6.89	4.21	1.65	0.57	1.92
SHTR5	Stabilization Hot Oil Heater (58.93 MMBtu/hr)	993.0	8760	58.93	0.0267	0.0163	0.0064	2.25	7.6	1.97	1.20	0.47	0.16	0.55	6.89	4.21	1.65	0.57	1.92
SHTR6	Stabilization Hot Oil Heater (58.93 MMBtu/hr)	993.0	8760	58.93	0.0267	0.0163	0.0064	2.25	7.6	1.97	1.20	0.47	0.16	0.55	6.89	4.21	1.65	0.57	1.92
SHTR7	Stabilization Hot Oil Heater w/ SCR catalyst (58.93 MMBtu/hr)	993.0	8760	58.93	0.0067	0.0163	0.0064	2.25	7.6	0.49	1.20	0.47	0.16	0.55	1.73	4.21	1.65	0.57	1.92
SHTR8	Stabilization Hot Oil Heater w/ SCR catalyst (58.93 MMBtu/hr)	993.0	8760	58.93	0.0067	0.0163	0.0064	2.25	7.6	0.49	1.20	0.47	0.16	0.55	1.73	4.21	1.65	0.57	1.92
CHTR1	Cryo Hot Oil Heater (94.54 MMBtu/hr)	993.0	8760	94.54	0.0334	0.0163	0.0064	2.25	7.6	3.95	1.93	0.76	0.26	0.88	13.83	6.75	2.65	0.91	3.09
CHTR2	Cryo Hot Oil Heater (94.54 MMBtu/hr)	993.0	8760	94.54	0.0334	0.0163	0.0064	2.25	7.6	3.95	1.93	0.76	0.26	0.88	13.83	6.75	2.65	0.91	3.09
CHTR3	Cryo Hot Oil Heater w/ SCR Catalyst (94.54 MMBtu/hr)	993.0	8760	94.54	0.0067	0.0163	0.0064	2.25	7.6	0.79	1.93	0.76	0.26	0.88	2.77	6.75	2.65	0.91	3.09
CHTR4	Cryo Hot Oil Heater w/ SCR Catalyst (94.54 MMBtu/hr)	993.0	8760	94.54	0.0067	0.0163	0.0064	2.25	7.6	0.79	1.93	0.76	0.26	0.88	2.77	6.75	2.65	0.91	3.09
RHTR1	Regen Heater (35.25 MMBtu/hr)	993.0	8760	35.25	0.0267	0.0163	0.0064	2.25	7.6	1.18	0.72	0.28	0.10	0.33	4.12	2.52	0.99	0.34	1.15
RHTR2	Regen Heater (35.25 MMBtu/hr)	993.0	8760	35.25	0.0267	0.0163	0.0064	2.25	7.6	1.18	0.72	0.28	0.10	0.33	4.12	2.52	0.99	0.34	1.15
RHTR3	Regen Heater (35.25 MMBtu/hr)	993.0	8760	35.25	0.0267	0.0163	0.0064	2.25	7.6	1.18	0.72	0.28	0.10	0.33	4.12	2.52	0.99	0.34	1.15
RHTR4	Regen Heater (35.25 MMBtu/hr)	993.0	8760	35.25	0.0267	0.0163	0.0064	2.25	7.6	1.18	0.72	0.28	0.10	0.33	4.12	2.52	0.99	0.34	1.15

[1] NOx, CO, and VOC factors were provided by the equipment manufacturers. lb/hr emissions have a 25% safety factor added to NOx, CO, VOC, SO2 and PM10 & 2.5.

[2] SO2 and PM emission factors were adjusted based on site heat content versus the AP-42 value of 1,020 Btu/scf. SO2 factor was adjusted to 7500 gr/MMscf (0.75 gr/100 scf).

[3] 20% safety factor was added to SHTR1,SHTR2,SHTR3 annual emissions for NOx, CO, VOC, SO2 and PM10 & 2.5. The heaters may run on rich gas while Cryo is down.

	NOx	CO	VOC	SO_2	$PM_{10 \& 2.5}$
Total (tpy)	**98.64**	**73.25**	**28.76**	**9.91**	**33.48**

XTO Energy, Inc.

Cowboy CDP

BURNER CALCULATIONS

HAZARDOUS AIR POLLUTANTS (HAPs)

					AP-42 Factors[1] lb/MMSCF				AP-42 & eng calc[3] lb/MMSCF	lb/hr[2]					tpy[2]				
Source ID	Source Description	Fuel Gas LHV Design Case (BTU/SCF)	Operating Hours	Burner Design Case (MMBTU/Hr)	Benzene	Toluene	Dichloro benzene	HCHO	N-Hexane	Benzene	Toluene	Dichloro benzene	HCHO	N-Hexane	Benzene	Toluene	Dichloro benzene	HCHO	N-Hexane
SHTR1	Stabilization Hot Oil Heater (58.93 MMBtu/hr)	993.0	8760	58.93	0.0021	0.0034	0.0021	0.0750	1.8000	0.00	0.00	0.00	0.01	0.12	0.00	0.00	0.00	0.02	0.55
SHTR2	Stabilization Hot Oil Heater (58.93 MMBtu/hr)	993.0	8760	58.93	0.0021	0.0034	0.0021	0.0750	1.8000	0.00	0.00	0.00	0.01	0.12	0.00	0.00	0.00	0.02	0.55
SHTR3	Stabilization Hot Oil Heater (58.93 MMBtu/hr)	993.0	8760	58.93	0.0021	0.0034	0.0021	0.0750	1.8000	0.00	0.00	0.00	0.01	0.12	0.00	0.00	0.00	0.02	0.55
SHTR4	Stabilization Hot Oil Heater (58.93 MMBtu/hr)	993.0	8760	58.93	0.0021	0.0034	0.0021	0.0750	0.4542	0.00	0.00	0.00	0.00	0.03	0.00	0.00	0.00	0.02	0.11
SHTR5	Stabilization Hot Oil Heater (58.93 MMBtu/hr)	993.0	8760	58.93	0.0021	0.0034	0.0021	0.0750	0.4542	0.00	0.00	0.00	0.00	0.03	0.00	0.00	0.00	0.02	0.11
SHTR6	Stabilization Hot Oil Heater (58.93 MMBtu/hr)	993.0	8760	58.93	0.0021	0.0034	0.0021	0.0750	0.4542	0.00	0.00	0.00	0.00	0.03	0.00	0.00	0.00	0.02	0.11
SHTR7	Stabilization Hot Oil Heater w/ SCR catalyst (58.93 MMBtu/hr)	993.0	8760	58.93	0.0021	0.0034	0.0021	0.0750	0.4542	0.00	0.00	0.00	0.00	0.03	0.00	0.00	0.00	0.02	0.11
SHTR8	Stabilization Hot Oil Heater w/ SCR catalyst (58.93 MMBtu/hr)	993.0	8760	58.93	0.0021	0.0034	0.0021	0.0750	0.4542	0.00	0.00	0.00	0.00	0.03	0.00	0.00	0.00	0.02	0.11
CHTR1	Cryo Hot Oil Heater (94.54 MMBtu/hr)	993.0	8760	94.54	0.0021	0.0034	0.0021	0.0750	0.4542	0.00	0.00	0.00	0.01	0.04	0.00	0.00	0.00	0.03	0.18
CHTR2	Cryo Hot Oil Heater (94.54 MMBtu/hr)	993.0	8760	94.54	0.0021	0.0034	0.0021	0.0750	0.4542	0.00	0.00	0.00	0.01	0.04	0.00	0.00	0.00	0.03	0.18
CHTR3	Cryo Hot Oil Heater w/ SCR Catalyst (94.54 MMBtu/hr)	993.0	8760	94.54	0.0021	0.0034	0.0021	0.0750	0.4542	0.00	0.00	0.00	0.01	0.04	0.00	0.00	0.00	0.03	0.18
CHTR4	Cryo Hot Oil Heater w/ SCR Catalyst (94.54 MMBtu/hr)	993.0	8760	94.54	0.0021	0.0034	0.0021	0.0750	0.4542	0.00	0.00	0.00	0.01	0.04	0.00	0.00	0.00	0.03	0.18
RHTR1	Regen Heater (35.25 MMBtu/hr)	993.0	8760	35.25	0.0021	0.0034	0.0021	0.0750	0.4542	0.00	0.00	0.00	0.00	0.02	0.00	0.00	0.00	0.01	0.07
RHTR2	Regen Heater (35.25 MMBtu/hr)	993.0	8760	35.25	0.0021	0.0034	0.0021	0.0750	0.4542	0.00	0.00	0.00	0.00	0.02	0.00	0.00	0.00	0.01	0.07
RHTR3	Regen Heater (35.25 MMBtu/hr)	993.0	8760	35.25	0.0021	0.0034	0.0021	0.0750	0.4542	0.00	0.00	0.00	0.00	0.02	0.00	0.00	0.00	0.01	0.07
RHTR4	Regen Heater (35.25 MMBtu/hr)	993.0	8760	35.25	0.0021	0.0034	0.0021	0.0750	0.4542	0.00	0.00	0.00	0.00	0.02	0.00	0.00	0.00	0.01	0.07

[1] **Source: AP-42 Table 1.4-1, 1.4-2, & 1.4-3**

[2] **20% safety factor was added to SHTR1,SHTR2,SHTR3 annual emissions for all HAPs. The heaters may run on rich gas while Cryo is down.**

[3] **SHTR4-8, CHTR1-4, and RHTR1-4 will burn residue gas with minimal to no Hexane, therefore Hexane lb/MMscf factor was calculated from fuel gas 0.01 mol percent Hexane. SHTR1-3 may burn rich gas while the Cryo is down so these are permitted with AP-42 factors for Hexane.**

C6 EF Calc $\frac{0.01 \text{ lbmol C6H14}}{100 \text{ lbmol fuel gas}} \times \frac{86.178 \text{ lbs C6H14}}{1 \text{ lbmol C6}} \times \frac{1 \text{ lbmol fuel gas}}{379.5 \text{ scf fuel gas}} \times \frac{10^6 \text{ scf fuel gas}}{1 \text{ MMscf fuel gas}} \times \frac{0.02 \text{ (1- 98\%DRE)}}{} = \frac{0.45 \text{ lbs C6H14}}{\text{MMSCF}}$

Total Individual HAPS (tpy)	Benzene	Toluene	Dichloro benzene	HCHO	N-Hexane
	0.0093	**0.015**	**0.0093**	**0.33**	**3.23**

Total Combined HAPS (tpy)	**3.59**

XTO Energy, Inc.
Cowboy CDP
HEATERS - EXHAUST STACK FLOW & FUEL CONSUMPTION RATES

Exhaust Stack and Fuel Consumption Data

Source	Stabilization Heaters (Design Case)
Burner Rating (btu/hr)	58,930,000
Heating Value (btu/scf)	993.0
Stack Temperature (°F)	488
Stack Diameter (ft)	4.0
Stack Height (ft)	33.0
Fuel Consumption (scf/hr)	59345
Fuel Consumption (scf/day)	1424290
Fuel Consumption (mmscf/year)	519.9
Air Injection Rate (scf/hr)	811845.3
Total exhaust flow rate @ STP (scf/hr)	871190.74
Total exhaust flow rate @ STP (scf/sec)	242.0
Total exhaust flow rate @ 488 °F (acf/hr)	1588247.7
Total exhaust flow rate @ 488 °F (acf/sec)	441.2
Exhaust Stack Exit Velocity @ STP (ft/sec)	19.3
Exhaust Stack Exit Velocity @ 488 °F (ft/sec)	35.1
Source	Cryogenic Heaters (Design Case)
Burner Rating (btu/hr)	94,540,000
Heating Value (btu/scf)	993.0
Stack Temperature (°F)	599
Stack Diameter (ft)	4.0
Stack Height (ft)	76.9
Fuel Consumption (scf/hr)	95206
Fuel Consumption (scf/day)	2284955
Fuel Consumption (mmscf/year)	834.0
Air Injection Rate (scf/hr)	1354787.7
Total exhaust flow rate @ STP (scf/hr)	1449994.16
Total exhaust flow rate @ STP (scf/sec)	402.8
Total exhaust flow rate @ 599 °F (acf/hr)	2952968.9
Total exhaust flow rate @ 599 °F (acf/sec)	820.3
Exhaust Stack Exit Velocity @ STP (ft/sec)	32.1
Exhaust Stack Exit Velocity @ 599 °F (ft/sec)	65.3
Source	Regeneration Heaters (Design Case)
Burner Rating (btu/hr)	35,250,000
Heating Value (btu/scf)	993.0
Stack Temperature (°F)	470
Stack Diameter (ft)	2.7
Stack Height (ft)	28.7
Fuel Consumption (scf/hr)	35498
Fuel Consumption (scf/day)	851964
Fuel Consumption (mmscf/year)	311.0
Air Injection Rate (scf/hr)	552001.5
Total exhaust flow rate @ STP (scf/hr)	587500.00
Total exhaust flow rate @ STP (scf/sec)	163.2
Total exhaust flow rate @ 470 °F (acf/hr)	1050721.2
Total exhaust flow rate @ 470 °F (acf/sec)	291.9
Exhaust Stack Exit Velocity @ STP (ft/sec)	29.2
Exhaust Stack Exit Velocity @ 470 °F (ft/sec)	52.3

XTO Energy, Inc.
Cowboy CDP
Greenhouse Gas Emissions - Stabilizer Heaters

Emission unit number(s): SHTR1,SHTR2,SHTR3,SHTR4,SHTR5,SHTR6,SHTR7,SHTR8,
Source description: Stabilization Hot Oil Heater (58.93 MMBtu/hr)

Fuel Consumption

Input heat rate:	58.93	MMBtu/hr	Capacity
Fuel heat value:	993	Btu/scf	Field Gas
Fuel rate:	59,345	scf/hr	Input heat rate / fuel heat value
Annual fuel usage:	519.9	MMscf/yr	8760 hrs/yr operation
Hours per year:	8760	hrs/yr	

Exhaust Parameters

Heat Rate:	58,930	MBtu/hr	
Exhaust temp (Tstk):	488	°F	Manufacturer
Stack diameter:	4.00	ft	Manufacturer
Stack height:	33	ft	Manufacturer
Exhaust velocity:	35.1	ft/sec	Manufacturer

Emission Rates
Uncontrolled Heater Emissions

GHG Emissions	CO_2	CH4	CH_4 as CO_2e	N_2O	N_2O as CO_2e	Total CO_2e	
	117.00	0.002	0.055	0.0002	0.066		lb/MMbtu
	6,895	0.130	3.25	0.013	3.87	6,902	lb/hr
	30,199	0.57	14.23	0.06	16.96	30,230	tpy (8760 hrs)

1 40 CFR 98 Emission Factors. Global warming potential of 25 for CH4 and 298 for N20.

XTO Energy, Inc.
Cowboy CDP
Greenhouse Gas Emissions - Cryo Heaters

Emission unit number(s): CHTR1,CHTR2,CHTR3,CHTR4
Source description: Cryo Hot Oil Heater (94.54 MMBtu/hr)

Fuel Consumption

Input heat rate:	94.54	MMBtu/hr	Capacity
Fuel heat value:	993	Btu/scf	Field Gas
Fuel rate:	95,206	scf/hr	Input heat rate / fuel heat value
Annual fuel usage:	834.0	MMscf/yr	8760 hrs/yr operation
Hours per year:	8760	hrs/yr	

Exhaust Parameters

Heat Rate:	94,540	MBtu/hr	
Exhaust temp (Tstk):	599	°F	Manufacturer
Stack diameter:	4.00	ft	Manufacturer
Stack height:	76.875	ft	Manufacturer
Exhaust velocity:	65.3	ft/sec	Manufacturer

Emission Rates
Uncontrolled Heater Emissions

GHG Emissions	CO_2	CH4	CH_4 as CO_2e	N_2O	N_2O as CO_2e	Total CO_2e	
	117.00	0.002	0.055	0.0002	0.066		lb/MMbtu
	11,061	0.208	5.21	0.021	6.21	11,072	lb/hr
	48,447	0.91	22.83	0.09	27.21	48,497	tpy (8760 hrs)

1 40 CFR 98 Emission Factors. Global warming potential of 25 for CH4 and 298 for N20.

XTO Energy, Inc.
Cowboy CDP
Greenhouse Gas Emissions - Regen Heaters

Emission unit number(s): RHTR1,RHTR2,RHTR3,RHTR4
Source description: Regen Heater (35.25 MMBtu/hr)

Fuel Consumption

Input heat rate:	35.25	MMBtu/hr	Capacity
Fuel heat value:	993	Btu/scf	Field Gas
Fuel rate:	35,498	scf/hr	Input heat rate / fuel heat value
Annual fuel usage:	311.0	MMscf/yr	8760 hrs/yr operation
Hours per year:	8760	hrs/yr	

Exhaust Parameters

Heat Rate:	35,250	MBtu/hr	
Exhaust temp (Tstk):	470	°F	Manufacturer
Stack diameter:	2.67	ft	Manufacturer
Stack height:	28.7	ft	Manufacturer
Exhaust velocity:	52.3	ft/sec	Manufacturer

Emission Rates
Uncontrolled Heater Emissions

GHG Emissions	CO_2	CH4	CH_4 as CO_2e	N_2O	N_2O as CO_2e	Total CO_2e	
	117.00	0.002	0.055	0.0002	0.066		lb/MMbtu
	4,124	0.078	1.94	0.008	2.32	4,128	lb/hr
	18,064	0.34	8.51	0.03	10.15	18,082	tpy (8760 hrs)

1 40 CFR 98 Emission Factors. Global warming potential of 25 for CH4 and 298 for N20.

XTO Energy, Inc.
Cowboy CDP
DUAL TIP FLARE PILOT/PURGE GAS HOURLY EMISSIONS (COMBINED BETWEEN ALL FLARES)

DUAL TIP 20 MMSCFD FLARES - HOURLY (FL1 - FL3)

Maximum Hourly Emission Rates and Composition to Flare[a,b]

Component	Pilot Fuel (Per Flare)	L.P. Cryo Flare Header Purge Gas	H.P. Cryo Flare Header Purge Gas	L.P. Backup Flare Header Purge Gas	H.P. Backup Flare Header Purge Gas	L.P. Stab Flare Header Purge Gas	H.P. Stab Flare Header Purge Gas	Total	Destruction Efficiency	Exhaust Stream (controlled)
	(lb/hr)	(lb/hr)	(lb/hr)	(lb/hr)	(lb/hr)	(lb/hr)	(lb/hr)	(lb/hr)	(%)	(lb/hr)
Water	0.00	0.01	0.02	0.01	0.02	0.00	0.01	0.07	0%	**0.07**
Hydrogen Sulfide	0.00	0.00	0.00	0.00	0.00	0.00	0.00	0.00	98%	**0.00**
Nitrogen	0.29	0.89	1.28	0.89	1.28	0.34	0.94	5.93	0%	**5.93**
Carbon Dioxide	0.07	0.20	0.29	0.20	0.29	0.08	0.21	1.32	0%	**1.32**
Methane	15.54	47.24	67.91	47.24	67.91	17.87	49.73	313.43	98%	**6.27**
Ethane	5.83	17.73	25.48	17.73	25.48	6.71	18.66	117.63	98%	**2.35**
Propane	4.19	12.74	18.32	12.74	18.32	4.82	13.42	84.56	98%	**1.69**
Iso-butane	0.55	1.69	2.42	1.69	2.42	0.64	1.77	11.18	98%	**0.22**
N-butane	1.24	3.78	5.43	3.78	5.43	1.43	3.98	25.07	98%	**0.50**
Iso-pentane	0.20	0.60	0.86	0.60	0.86	0.23	0.63	3.99	98%	**0.08**
N-pentane	0.18	0.55	0.80	0.55	0.80	0.21	0.58	3.68	98%	**0.07**
Cyclopentanes	0.00	0.00	0.00	0.00	0.00	0.00	0.00	0.00	98%	**0.00**
Other Hexanes	0.04	0.13	0.18	0.13	0.18	0.05	0.13	0.85	98%	**0.02**
n-Hexane	0.02	0.06	0.08	0.06	0.08	0.02	0.06	0.37	98%	**0.01**
Methylcyclopentane	0.01	0.03	0.04	0.03	0.04	0.01	0.03	0.20	98%	**0.00**
Benzene	0.00	0.01	0.01	0.01	0.01	0.00	0.01	0.04	98%	**0.00**
Cyclohexane	0.01	0.03	0.04	0.03	0.04	0.01	0.03	0.20	98%	**0.00**
2,2,4 Trimethylpentane	0.00	0.00	0.00	0.00	0.00	0.00	0.00	0.00	98%	**0.00**
Other Heptanes	0.00	0.01	0.02	0.01	0.02	0.00	0.01	0.08	98%	**0.00**
Methylcyclohexane	0.00	0.01	0.02	0.01	0.02	0.00	0.01	0.08	98%	**0.00**
n-Heptane	0.00	0.00	0.01	0.00	0.01	0.00	0.00	0.03	98%	**0.00**
Toluene	0.00	0.00	0.00	0.00	0.00	0.00	0.00	0.00	98%	**0.00**
Octanes	0.00	0.00	0.01	0.00	0.01	0.00	0.00	0.03	98%	**0.00**
Ethylbenzene	0.00	0.00	0.00	0.00	0.00	0.00	0.00	0.00	98%	**0.00**
M&P-Xylene	0.00	0.00	0.00	0.00	0.00	0.00	0.00	0.00	98%	**0.00**
Nonanes	0.00	0.00	0.00	0.00	0.00	0.00	0.00	0.00	98%	**0.00**
Decanes	0.00	0.00	0.00	0.00	0.00	0.00	0.00	0.00	98%	**0.00**
Undecanes Plus	0.00	0.00	0.00	0.00	0.00	0.00	0.00	0.00	98%	**0.00**
Total	**28.20**	**85.72**	**123.22**	**85.72**	**123.22**	**32.43**	**90.23**	**568.73**	**--**	**18.55**
Total VOC	**6.46**	**19.65**	**28.24**	**19.65**	**28.24**	**7.43**	**20.68**	**130.36**	**--**	**2.61**
Total HAP	**0.020**	**0.061**	**0.088**	**0.061**	**0.088**	**0.023**	**0.065**	**0.41**	**--**	**0.0082**
Heating Value (Btu/scf)	1171.41	1171.41	1171.41	1171.41	1171.41	1171.41	1171.41	**1,171.41**		
Molecular Weight	21.40	21.40	21.40	21.40	21.40	21.40	21.40	**--**		
SO2 Emissions (lb/hr)	0.007	0.020	0.029	0.020	0.029	0.008	0.021	**0.13**		
Volumetric Flow (scf/hr)[c]	500.00	1,520.00	2,185.00	1,520.00	2,185.00	575.00	1,600.00	**10,085.00**		
Heat Release (MMBtu/hr)	0.59	1.78	2.56	1.78	2.56	0.67	1.87	**11.81**		

Criteria Pollutant Emissions Cryo Flare [b]

Component	Emission Rate (lb/hr)	Emission Factor	Emission Factor Units
NO_X	0.68	0.138	lb/MMBtu
CO	1.36	0.2755	lb/MMBtu
SO_2	0.056	--	--
PM_{10}	0.037	7.60	lb/MMscf
$PM_{2.5}$	0.037	7.60	lb/MMscf
H_2S	0.00	--	--

Flare DRE	98.00	%

Criteria Pollutant Emissions Stab Flare [b]

Component	Emission Rate (lb/hr)	Emission Factor	Emission Factor Units
NO_X	0.43	0.138	lb/MMBtu
CO	0.86	0.2755	lb/MMBtu
SO_2	0.036	--	--
PM_{10}	0.023	7.60	lb/MMscf
$PM_{2.5}$	0.023	7.60	lb/MMscf
H_2S	0.00	--	--

Criteria Pollutant Emissions Backup Flare [b]

Component	Emission Rate (lb/hr)	Emission Factor	Emission Factor Units
NO_X	0.68	0.138	lb/MMBtu
CO	1.36	0.2755	lb/MMBtu
SO_2	0.056	--	--
PM_{10}	0.037	7.60	lb/MMscf
$PM_{2.5}$	0.037	7.60	lb/MMscf
H_2S	0.00	--	--

Footnotes:

[a] Uncontrolled stream properties determined via ProMax.

[b] Flare CO and NOx emission factors from TCEQ Air Permit Techincal Guidance for Chemical Sources. PM and PM2.5 emission factors from AP-42, Table 1.4-1 and 1.4-2, July 1998. SO2 emissions assume 100% conversion of H2S to SO2.

[C] Flare purge gas flowrates were based on engineering judgement.

XTO Energy, Inc.
Cowboy CDP
DUAL TIP FLARE PILOT/PURGE GAS ANNUAL EMISSIONS (COMBINED BETWEEN ALL FLARES)

DUAL TIP 20 MMSCFD FLARES - ANNUAL (FL1 - FL3)

Annual Emission Rates and Composition to Flare[a,b]

Component	Pilot Fuel (Per Flare)	L.P. Cryo Flare Header Purge Gas	H.P. Cryo Flare Header Purge Gas	L.P. Backup Flare Header Purge Gas	H.P. Backup Flare Header Purge Gas	L.P. Stab Flare Header Purge Gas	H.P. Stab Flare Header Purge Gas	Total	Destruction Efficiency	Exhaust Stream (controlled)
	(ton/yr)	(ton/yr)	(ton/yr)	(ton/yr)	(ton/yr)	(ton/yr)	(ton/yr)	(ton/yr)	(%)	(ton/yr)
Water	0.02	0.05	0.07	0.05	0.07	0.02	0.05	0.31	0%	**0.31**
Hydrogen Sulfide	0.00	0.00	0.00	0.00	0.00	0.00	0.00	0.00	98%	**0.00**
Nitrogen	1.29	3.91	5.62	3.91	5.62	1.48	4.12	25.96	0%	**25.96**
Carbon Dioxide	0.29	0.87	1.25	0.87	1.25	0.33	0.92	5.79	0%	**5.79**
Methane	68.06	206.91	297.43	206.91	297.43	78.27	217.80	1372.81	98%	**27.46**
Ethane	25.54	77.65	111.62	77.65	111.62	29.37	81.74	515.20	98%	**10.30**
Propane	18.36	55.82	80.25	55.82	80.25	21.12	58.76	370.38	98%	**7.41**
Iso-butane	2.43	7.38	10.61	7.38	10.61	2.79	7.77	48.98	98%	**0.98**
N-butane	5.44	16.55	23.79	16.55	23.79	6.26	17.42	109.80	98%	**2.20**
Iso-pentane	0.87	2.63	3.78	2.63	3.78	1.00	2.77	17.47	98%	**0.35**
N-pentane	0.80	2.43	3.49	2.43	3.49	0.92	2.56	16.12	98%	**0.32**
Cyclopentanes	0.00	0.00	0.00	0.00	0.00	0.00	0.00	0.00	98%	**0.00**
Other Hexanes	0.18	0.56	0.80	0.56	0.80	0.21	0.59	3.71	98%	**0.07**
n-Hexane	0.08	0.24	0.35	0.24	0.35	0.09	0.25	1.60	98%	**0.03**
Methylcyclopentane	0.04	0.13	0.19	0.13	0.19	0.05	0.14	0.88	98%	**0.02**
Benzene	0.01	0.03	0.04	0.03	0.04	0.01	0.03	0.18	98%	**0.00**
Cyclohexane	0.04	0.13	0.19	0.13	0.19	0.05	0.14	0.88	98%	**0.02**
2,2,4 Trimethylpentane	0.00	0.00	0.00	0.00	0.00	0.00	0.00	0.00	98%	**0.00**
Other Heptanes	0.02	0.05	0.08	0.05	0.08	0.02	0.06	0.35	98%	**0.01**
Methylcyclohexane	0.02	0.05	0.07	0.05	0.07	0.02	0.05	0.34	98%	**0.01**
n-Heptane	0.01	0.02	0.03	0.02	0.03	0.01	0.02	0.12	98%	**0.00**
Toluene	0.00	0.00	0.00	0.00	0.00	0.00	0.00	0.00	98%	**0.00**
Octanes	0.01	0.02	0.03	0.02	0.03	0.01	0.02	0.13	98%	**0.00**
Ethylbenzene	0.00	0.00	0.00	0.00	0.00	0.00	0.00	0.00	98%	**0.00**
M&P-Xylene	0.00	0.00	0.00	0.00	0.00	0.00	0.00	0.00	98%	**0.00**
Nonanes	0.00	0.00	0.00	0.00	0.00	0.00	0.00	0.00	98%	**0.00**
Decanes	0.00	0.00	0.00	0.00	0.00	0.00	0.00	0.00	98%	**0.00**
Undecanes Plus	0.00	0.00	0.00	0.00	0.00	0.00	0.00	0.00	98%	**0.00**
Total	**123.50**	**375.45**	**539.70**	**375.45**	**539.70**	**142.03**	**395.21**	**2491.03**	**--**	**81.24**
Total VOC	**28.31**	**86.05**	**123.70**	**86.05**	**123.70**	**32.55**	**90.58**	**570.96**	**--**	**11.42**
Total HAP	**0.089**	**0.27**	**0.39**	**0.27**	**0.39**	**0.10**	**0.28**	**1.79**	**--**	**0.04**
Heating Value (Btu/scf)	1,171.41	1,171.41	1,171.41	1,171.41	1,171.41	1,171.41	1,171.41	**1,171.41**		
Molecular Weight	21.40	21.40	21.40	21.40	21.40	21.40	21.40	**--**		
SO2 Emissions (lb/hr)	0.029	0.089	0.13	0.089	0.13	0.034	0.094	**0.59**		
Volumetric Flow (scf/year)	4,380,000	13,315,200	19,140,600	13,315,200	19,140,600	5,037,000	14,016,000	**88,344,600**		
Heat Release (MMBtu/hr)	5,130.76	15,597.50	22,421.41	15,597.50	22,421.41	5,900.37	16,418.42	**103,487.38**		

Criteria Pollutant Emissions Cryo Flare [b]

Component	Emission Rate	Emission Factor	Emission Factor Units
	ton/yr		
NO_X	2.98	0.138	lb/MMBtu
CO	5.94	0.5496	lb/MMBtu
SO_2	0.25	--	--
PM_{10}	0.16	7.60	lb/MMscf
$PM_{2.5}$	0.16	7.60	lb/MMscf
H_2S	0.00	--	--

Flare DRE	98.00	%

Criteria Pollutant Emissions Stab Flare [b]

Component	Emission Rate	Emission Factor	Emission Factor Units
	ton/yr		
NO_X	1.89	0.138	lb/MMBtu
CO	3.78	0.5496	lb/MMBtu
SO_2	0.16	--	--
PM_{10}	0.10	7.60	lb/MMscf
$PM_{2.5}$	0.10	7.60	lb/MMscf
H_2S	0.00	--	--

Footnotes:

[a] Uncontrolled stream properties determined via ProMax.

[b] Flare CO and NOx emission factors from TCEQ Air Permit Techincal Guidance for Chemical Sources. PM and PM2.5 emission factors from AP-42, Table 1.4-1 and 1.4-2, July 1998. SO2 emissions assume 100% conversion of H2S to SO2.

XTO Energy, Inc.
Cowboy CDP
DUAL TIP FLARE CRYO SSM HOURLY EMISSIONS (COMBINED BETWEEN ALL FLARES)

DUAL TIP 20 MMSCFD FLARES - HOURLY (FL1 - FL3CRYO-SSM)

Maximum Hourly CRYO-SSM Emission Rates and Composition to Flare[a,b]

Component	CRYO Blowdown SSM Gas	Total	Destruction Efficiency	Exhaust Stream (controlled)
	(lb/hr)	(lb/hr)	(%)	(lb/hr)
Water	14	14	0%	**14.24**
Hydrogen Sulfide	0	0	98%	**0.00**
Nitrogen	1175	1175	0%	**1175.20**
Carbon Dioxide	262	262	0%	**262.09**
Methane	62157	62157	98%	**1243.14**
Ethane	23327	23327	98%	**466.54**
Propane	16770	16770	98%	**335.39**
Iso-butane	2218	2218	98%	**44.36**
N-butane	4972	4972	98%	**99.43**
Iso-pentane	791	791	98%	**15.82**
N-pentane	730	730	98%	**14.60**
Cyclopentanes	0	0	98%	**0.00**
Other Hexanes	168	168	98%	**3.36**
n-Hexane	73	73	98%	**1.45**
Methylcyclopentane	40	40	98%	**0.80**
Benzene	8	8	98%	**0.16**
Cyclohexane	40	40	98%	**0.80**
2,2,4 Trimethylpentane	0	0	98%	**0.00**
Other Heptanes	16	16	98%	**0.32**
Methylcyclohexane	16	16	98%	**0.31**
n-Heptane	5	5	98%	**0.11**
Toluene	0	0	98%	**0.00**
Octanes	6	6	98%	**0.12**
Ethylbenzene	0	0	98%	**0.00**
M&P-Xylene	0	0	98%	**0.00**
Nonanes	0	0	98%	**0.00**
Decanes	0	0	98%	**0.00**
Undecanes Plus	0	0	98%	**0.00**
Total	**112787**	**112787**	**--**	**3678.24**
Total VOC	**25851**	**25851**	**--**	**517.03**
Total HAP	**81**	**81**	**--**	**1.62**
Heating Value (Btu/scf)	1,171.41	**1,171.41**		
Molecular Weight	21.40	**--**		
SO2 Emissions (lb/hr)	0.00	**0.00**		
Volumetric Flow (scf/hr)	2,000,000	**2,000,000**		
Heat Release (MMBtu/hr)	2,342.81	**2,342.81**		

Criteria Pollutant Emissions from Flare [b]

Component	Emission Rate	Emission Factor	Emission Factor Units
	(lb/hr)		
NO_X	323.31	0.138	lb/MMBtu
CO	645.44	0.2755	lb/MMBtu
SO_2	0.00	--	--
PM_{10}	54.81	7.60	lb/MMscf
$PM_{2.5}$	54.81	7.60	lb/MMscf
H_2S	0.00	--	--

Flare DRE	98.00	%
CRYO-SSM Flare Time	1	blowdown/hr
	2	hrs/day
	40	hrs/year

Footnotes:

[a] Uncontrolled stream properties determined via ProMax.

[b] Flare CO and NOx emission factors from TCEQ Air Permit Techincal Guidance for Chemical Sources. PM and PM2.5 emission factors from AP-42, Table 1.4-1 and 1.4-2, July 1998. SO2 emissions assume 100% conversion of H2S to SO2.

XTO Energy, Inc.
Cowboy CDP
DUAL TIP FLARE CRYO SSM ANNUAL EMISSIONS (COMBINED BETWEEN ALL FLARES)

DUAL TIP 20 MMSCFD FLARES - ANNUAL (FL1 - FL3CRYO-SSM)

Annual Emission CRYO-SSM Rates and Composition to Flare[a,b]

Component	CRYO Blowdown SSM Gas	Total	Destruction Efficiency	Exhaust Stream (controlled)
	(ton/yr)	ton/yr	(%)	(ton/yr)
Water	0.28	0.28	0%	**0.28**
Hydrogen Sulfide	0.00	0.00	98%	**0.00**
Nitrogen	23.50	23.50	0%	**23.50**
Carbon Dioxide	5.24	5.24	0%	**5.24**
Methane	1243.14	1243.14	98%	**24.86**
Ethane	466.54	466.54	98%	**9.33**
Propane	335.39	335.39	98%	**6.71**
Iso-butane	44.36	44.36	98%	**0.89**
N-butane	99.43	99.43	98%	**1.99**
Iso-pentane	15.82	15.82	98%	**0.32**
N-pentane	14.60	14.60	98%	**0.29**
Cyclopentanes	0.00	0.00	98%	**0.00**
Other Hexanes	3.36	3.36	98%	**0.07**
n-Hexane	1.45	1.45	98%	**0.03**
Methylcyclopentane	0.80	0.80	98%	**0.02**
Benzene	0.16	0.16	98%	**0.00**
Cyclohexane	0.80	0.80	98%	**0.02**
2,2,4 Trimethylpentane	0.00	0.00	98%	**0.00**
Other Heptanes	0.32	0.32	98%	**0.01**
Methylcyclohexane	0.31	0.31	98%	**0.01**
n-Heptane	0.11	0.11	98%	**0.00**
Toluene	0.00	0.00	98%	**0.00**
Octanes	0.12	0.12	98%	**0.00**
Ethylbenzene	0.00	0.00	98%	**0.00**
M&P-Xylene	0.00	0.00	98%	**0.00**
Nonanes	0.00	0.00	98%	**0.00**
Decanes	0.00	0.00	98%	**0.00**
Undecanes Plus	0.00	0.00	98%	**0.00**
Total	**2255.74**	**2255.74**	--	**73.56**
Total VOC	**517.03**	**517.03**	--	**10.34**
Total HAP	**1.62**	**0.00**	--	**0.03**
Heating Value (Btu/scf)	1,171.41	**1,171.41**		
Molecular Weight	21.40	--		
SO2 Emissions (lb/hr)	0.022	**0.022**		
Volumetric Flow (scf/year)	80,000,000	**80,000,000**		
Heat Release (MMBtu/hr)	93,712.46	**93,712.46**		

Criteria Pollutant Emissions from Flare [b]

Component	Emission Rate	Emission Factor	Emission Factor Units
	ton/yr		
NO_X	6.47	0.138	lb/MMBtu
CO	12.91	0.5496	lb/MMBtu
SO_2	0.00	--	--
PM_{10}	0.30	7.60	lb/MMscf
$PM_{2.5}$	0.30	7.60	lb/MMscf
H_2S	0.00	--	--

Flare DRE	98.00	%
CRYO-SSM Flare Time	1.00	blowdown/hr
	2.00	hrs/day
	40.00	hrs/year
	4,000,000	MMscfd

Footnotes:

[a] Uncontrolled stream properties determined via ProMax.

[b] Flare CO and NOx emission factors from TCEQ Air Permit Techincal Guidance for Chemical Sources. PM and PM2.5 emission factors from AP-42, Table 1.4-1 and 1.4-2, July 1998. SO2 emissions assume 100% conversion of H2S to SO2.

XTO Energy, Inc.
Cowboy CDP
DUAL TIP FLARE OVERHEAD SSM HOURLY EMISSIONS (COMBINED BETWEEN ALL FLARES)

DUAL TIP 20 MMSCFD FLARES - HOURLY (FL1 - FL3OVHD-SSM)

Maximum Hourly OVHD-SSM Emission Rates and Composition to Flare[a,b]

Component	Stabilizer Overhead SSM Gas	Total	Destruction Efficiency	Exhaust Stream (controlled)
	(lb/hr)	(lb/hr)	(%)	(lb/hr)
Water	208.88	208.88	0%	**208.88**
Hydrogen Sulfide	0.00	0.00	98%	**0.00**
Nitrogen	0.00	0.00	0%	**0.00**
Carbon Dioxide	28.99	28.99	0%	**28.99**
Methane	4.23	4.23	98%	**0.08**
Ethane	5800.12	5800.12	98%	**116.00**
Propane	36556.16	36556.16	98%	**731.12**
Iso-butane	4472.30	4472.30	98%	**89.45**
N-butane	7658.06	7658.06	98%	**153.16**
Iso-pentane	1463.95	1463.95	98%	**29.28**
N-pentane	1435.43	1435.43	98%	**28.71**
Cyclopentanes	0.00	0.00	98%	**0.00**
Other Hexanes	647.19	647.19	98%	**12.94**
n-Hexane	340.63	340.63	98%	**6.81**
Methylcyclopentane	266.13	266.13	98%	**5.32**
Benzene	257.30	257.30	98%	**5.15**
Cyclohexane	498.99	498.99	98%	**9.98**
2,2,4 Trimethylpentane	0.00	0.00	98%	**0.00**
Other Heptanes	118.82	118.82	98%	**2.38**
Methylcyclohexane	323.42	323.42	98%	**6.47**
n-Heptane	198.04	198.04	98%	**3.96**
Toluene	157.82	157.82	98%	**3.16**
Octanes	150.51	150.51	98%	**3.01**
Ethylbenzene	0.00	0.00	98%	**0.00**
M&P-Xylene	27.98	27.98	98%	**0.56**
Nonanes	50.70	50.70	98%	**1.01**
Decanes	18.75	18.75	98%	**0.37**
Undecanes Plus	34.97	34.97	98%	**0.70**
Total	**60719.35**	**60719.35**	--	**1447.50**
Total VOC	**54677.13**	**54677.13**	--	**1093.54**
Total HAP	**783.72**	**783.72**	--	**15.67**
Heating Value (Btu/scf)	2,399.81	**2,399.81**		
Molecular Weight	46.08	--		
SO2 Emissions (lb/hr)	0.00	**0.00**		
Volumetric Flow (scf/hr)	500,000.00	**500,000.00**		
Heat Release (MMBtu/hr)	1,199.91	**1,199.91**		

Criteria Pollutant Emissions from Flare [b]

Component	Emission Rate	Emission Factor	Emission Factor Units
	(lb/hr)		
NO_X	165.59	0.138	lb/MMBtu
CO	330.57	0.2755	lb/MMBtu
SO_2	0.00	--	--
PM_{10}	8.94	7.60	lb/MMscf
$PM_{2.5}$	8.94	7.60	lb/MMscf
H_2S	0.00	--	--

Flare DRE	98.00	%
OVHD-SSM Flare Time	1.00	blowdown/hr
	2.00	hrs/day
	40.00	hrs/year

Footnotes:

[a] Uncontrolled stream properties determined via ProMax.

[b] Flare CO and NOx emission factors from TCEQ Air Permit Techincal Guidance for Chemical Sources. PM and PM2.5 emission factors from AP-42, Table 1.4-1 and 1.4-2, July 1998. SO2 emissions assume 100% conversion of H2S to SO2.

XTO Energy, Inc.
Cowboy CDP
DUAL TIP FLARE OVERHEAD SSM ANNUAL EMISSIONS (COMBINED BETWEEN ALL FLARES)

DUAL TIP 20 MMSCFD FLARES - ANNUAL (FL1 - FL3OVHD-MSS)

Annual Emission OVHD-SSM Rates and Composition to Flare[a,b]

Component	Stabilizer Overhead SSM Gas	Total	Destruction Efficiency	Exhaust Stream (controlled)
	(ton/yr)	ton/yr	(%)	(ton/yr)
Water	4.18	4.18	0%	**4.18**
Hydrogen Sulfide	0.00	0.00	98%	**0.00**
Nitrogen	0.00	0.00	0%	**0.00**
Carbon Dioxide	0.58	0.58	0%	**0.58**
Methane	0.08	0.08	98%	**0.00**
Ethane	116.00	116.00	98%	**2.32**
Propane	731.12	731.12	98%	**14.62**
Iso-butane	89.45	89.45	98%	**1.79**
N-butane	153.16	153.16	98%	**3.06**
Iso-pentane	29.28	29.28	98%	**0.59**
N-pentane	28.71	28.71	98%	**0.57**
Cyclopentanes	0.00	0.00	98%	**0.00**
Other Hexanes	12.94	12.94	98%	**0.26**
n-Hexane	6.81	6.81	98%	**0.14**
Methylcyclopentane	5.32	5.32	98%	**0.11**
Benzene	5.15	5.15	98%	**0.10**
Cyclohexane	9.98	9.98	98%	**0.20**
2,2,4 Trimethylpentane	0.00	0.00	98%	**0.00**
Other Heptanes	2.38	2.38	98%	**0.05**
Methylcyclohexane	6.47	6.47	98%	**0.13**
n-Heptane	3.96	3.96	98%	**0.08**
Toluene	3.16	3.16	98%	**0.06**
Octanes	3.01	3.01	98%	**0.06**
Ethylbenzene	0.00	0.00	98%	**0.00**
M&P-Xylene	0.56	0.56	98%	**0.01**
Nonanes	1.01	1.01	98%	**0.02**
Decanes	0.37	0.37	98%	**0.01**
Undecanes Plus	0.70	0.70	98%	**0.01**
Total	**1214.39**	**1214.39**	**--**	**28.95**
Total VOC	**1093.54**	**1093.54**	**--**	**21.87**
Total HAP	**15.67**	**0.56**	**--**	**0.31**
Heating Value (Btu/scf)	2,399.81	**2,399.81**		
Molecular Weight	46.08	**--**		
SO2 Emissions (lb/hr)	0.022	**0.022**		
Volumetric Flow (scf/year)	20,000,000	**20,000,000**		
Heat Release (MMBtu/hr)	47,996.26	**47,996.26**		

Criteria Pollutant Emissions from Flare [b]

Component	Emission Rate	Emission Factor	Emission Factor Units
	ton/yr		
NO_X	3.31	0.138	lb/MMBtu
CO	6.61	0.5496	lb/MMBtu
SO_2	0.00	--	--
PM_{10}	0.08	7.60	lb/MMscf
$PM_{2.5}$	0.08	7.60	lb/MMscf
H_2S	0.00	--	--

Flare DRE	98.00	%
OVHD-MSS Flare Time	1.00	blowdown/hr
	2.00	hrs/day
	40.00	hrs/year

Footnotes:

[a] Uncontrolled stream properties determined via ProMax.

[b] Flare CO and NOx emission factors from TCEQ Air Permit Techincal Guidance for Chemical Sources. PM and PM2.5 emission factors from AP-42, Table 1.4-1 and 1.4-2, July 1998. SO2 emissions assume 100% conversion of H2S to SO2.

XTO Energy, Inc.

Cowboy CDP

PILOT/PURGE GAS COMBUSTION (FL1-FL3) - GHG EMISSIONS SUMMARY

Flare Emissions Summary Table - Normal Operations

1) $E_{a,CH4} = V_a * X_{CH4} * [(1-\eta)* Z_L + Z_U$ = **353.38** **SCF/Yr**

Va = **88,344,600.00**
X_{CH4} = **0.0002**
N = **0.98**
Z_L = **1.00**
Z_U = **0.00**

Source	Annual Volume
FL1-FL3 Purge	88344600
	88344600.00

2) $E_{a,CO2}$ (uncombusted) = $V_a * X_{CO2}$ = **44,172.30** **SCF/Yr**

Va = **88,344,600.00**
X_{CO2} = **0.000500**

3) $E_{a,CO2}$ (combusted) = Σ (η * Va * Yj * Rj * Z_L)

N = **0.98**

			Rj =	**$E_{a,CO2}$ =**
V_a =	**88,344,600.00**			
Y_J=	**Methane**	0.0002	1	17,315.54
	Ethane	0.1464	2	25,349,952.90
	Propane	0.6292	3	163,424,081.62
	Butane	0.1584	4	54,855,635.79
	Pentane +	0.0565	5	24,458,202.51
Z_L =	**1.00**			**268,105,188.36** **SCF/Yr**

3) $E_{s,n} = \frac{E_{a,n} * (459.67 + T_s) * P_a}{(459.67 + T_a) * P_s}$

$E_{a,n}$(CH4) = 353.38 = **318.11** **SCF/Yr**
$E_{a,n}$(CO2) = 268,149,360.66 = **241,389,919.40** **SCF/Yr**
Ts = 60° F
Ta = 93.7° F Roswell, AP-42
Ps = 13.28
Pa = 12.73 Roswell, AP-42

4) $Mass_{s,i} = E_{s,i} * \rho_i * 10^3$

$E_{s,i}$ (CH4) = 318.11
$E_{s,i}$ (CO2) = 241,389,919.40

p_i (CH4) =	0.0192	kg/ft3	=	0.01	metric tons
p_i (CO2) =	0.0526	kg/ft3	=	12697.11	metric tons

5) $CO_2e = CO_2 + (CH_4 X GWP)$

			short tons	CO_2e
CO2 =	12697.11	=	13996.16	13996.16
CH4 =	0.01	=	0.01	0.17
CH4 GWP =	25			**13996.33**

XTO Energy, Inc.

Cowboy CDP

OVERHEAD GAS COMBUSTION (FL1-FL3OVHD-SSM) - GHG EMISSIONS SUMMARY

Flare Emissions Summary Table - Normal Operations

1) $E_{a,CH4} = V_a * X_{CH4} * [(1-\eta)* Z_L + Z_U$ = **80.00** **SCF/Yr**

Va =	**20,000,000.00**
X_{CH4} =	**0.0002**
N =	**0.98**
Z_L =	**1.00**
Z_U =	**0.00**

Source	Annual Volume
FL1-FL3 MSS	20000000
	20000000.00

2) $E_{a,CO2}$ (uncombusted) = $V_a * X_{CO2}$ = **10,000.00** **SCF/Yr**

Va =	**20,000,000.00**
X_{CO2} =	**0.000500**

3) $E_{a,CO2}$ (combusted) = $\Sigma (\eta * Va * Yj * Rj * Z_L)$

N =	**0.98**			
V_a =	**20,000,000.00**		**Rj =**	**$E_{a,CO2}$ =**
Y_J=	**Methane**	0.0002	1	3,920.00
	Ethane	0.1464	2	5,738,880.00
	Propane	0.6292	3	36,996,960.00
	Butane	0.1584	4	12,418,560.00
	Pentane +	0.0565	5	5,537,000.00
Z_L =	**1.00**			**60,695,320.00** **SCF/Yr**

3) $E_{s,n} = \frac{E_{a,n} * (459.67 + T_s) * P_a}{(459.67 + T_a) * P_s}$

$E_{a,n}$(CH4) =	80.00		=	**72.02**	**SCF/Yr**
$E_{a,n}$(CO2) =	60,705,320.00		=	**54,647,351.26**	**SCF/Yr**
Ts =	60° F				
Ta =	93.7° F	Roswell, AP-42			
Ps =	13.28				
Pa =	12.73	Roswell, AP-42			

4) $Mass_{s,i} = E_{s,i} * \rho_i * 10^3$

$E_{s,i}$ (CH4) =	72.02				
$E_{s,i}$ (CO2) =	54,647,351.26				
p_i (CH4) =	0.0192	kg/ft3	=	0.00	metric tons
p_i (CO2) =	0.0526	kg/ft3	=	2874.45	metric tons

5) $CO_2e = CO_2 + (CH_4 X GWP)$

			short tons	CO_2e
CO2 =	2874.45	=	3168.54	3168.54
CH4 =	0.00	=	0.00	0.04
CH4 GWP =	25			**3168.58**

XTO Energy, Inc.

Cowboy CDP

CRYO GAS COMBUSTION (FL1-FL3CRYO-MSS) - GHG EMISSIONS SUMMARY

Flare Emissions Summary Table - Normal Operations

1) $E_{a,CH4} = V_a * X_{CH4} * [(1-\eta)* Z_L + Z_U$ = **1,176,260.24** **SCF/Yr**

Va =	**80,000,000.00**
X_{CH4} =	**0.7352**
N =	**0.98**
Z_L =	**1.00**
Z_U =	**0.00**

Source	Annual Volume
FL1-FL3 MSS	80,000,000
	80000000.00

2) $E_{a,CO2}$ (uncombusted) = $V_a * X_{CO2}$ = **90,399.10** **SCF/Yr**

Va =	**80,000,000.00**
X_{CO2} =	**0.001130**

3) $E_{a,CO2}$ (combusted) = $\Sigma (\eta * Va * Yj * Rj * Z_L)$

N =	**0.98**			
V_a =	**80,000,000.00**		**Rj =**	**$E_{a,CO2}$ =**
Y_J=	**Methane**	0.7352	1	57,636,751.63
	Ethane	0.1472	2	23,080,729.19
	Propane	0.0722	3	16,971,862.28
	Butane	0.0145	4	4,540,882.59
	Pentane +	0.0048	5	1,885,501.14
Z_L =	**1.00**			**104,115,726.84** **SCF/Yr**

3) $E_{s,n} = \frac{E_{a,n} * (459.67 + T_s) * P_a}{(459.67 + T_a) * P_s}$

$E_{a,n}$(CH4) =	1,176,260.24		=	**1,058,877.65**	**SCF/Yr**
$E_{a,n}$(CO2) =	104,206,125.94		=	**93,807,079.31**	**SCF/Yr**
Ts =	60° F				
Ta =	93.7° F	Roswell, AP-42			
Ps =	13.28				
Pa =	12.73	Roswell, AP-42			

4) $Mass_{s,i} = E_{s,i} * \rho_i * 10^3$

$E_{s,i}$ (CH4) =	1,058,877.65				
$E_{s,i}$ (CO2) =	93,807,079.31				
p_i (CH4) =	0.0192	kg/ft3	=	20.33	metric tons
p_i (CO2) =	0.0526	kg/ft3	=	4934.25	metric tons

5) $CO_2e = CO_2 + (CH_4 X GWP)$

			short tons	CO_2e
CO2 =	4934.25	=	5439.08	5439.08
CH4 =	20.33	=	22.41	560.26
CH4 GWP =	25			**5999.34**

XTO ENERGY INC.
Cowboy CDP
COMBUSTOR HOURLY EMISSIONS

COMBUSTOR - HOURLY (EPN: ECD1)

Maximum Hourly Emission Rates and Composition to Combustor[a,b]

Component	Pilot Fuel	Slop Oil Tank (SOTK1)		Gunbarrel (GBS1)		PW Tanks (53-54)		Slop Oil Truck Loading (SOTL)	Total	Destruction Efficiency	Flare Exhaust (controlled)
		W&B Losses	Flashing Losses	W&B Losses	Flashing Losses	W&B Losses	Flashing Losses				
	(lb/hr)	(lb/hr)	(lb/hr)	(lb/hr)	(lb/hr)	(lb/hr)	(lb/hr)	(lb/hr)	(lb/hr)	(%)	(lb/hr)
Water	0.00	0.00	0.02	1.98	0.29	1.68	0.03	0.00	4.00	0%	**4.00**
Hydrogen Sulfide	0.00	0.00	0.00	0.00	0.00	0.00	0.00	0.00	0.00	99%	**0.00**
Nitrogen	0.29	0.00	0.00	0.00	0.00	0.00	0.00	0.00	0.30	99%	**0.00**
Carbon Dioxide	0.07	0.00	0.02	0.04	0.17	0.72	0.02	0.02	1.06	0%	**1.06**
Methane	15.54	0.00	0.09	0.00	0.02	0.00	0.00	0.03	15.68	99%	**0.16**
Ethane	5.83	0.03	1.67	0.00	0.33	0.10	0.04	1.99	9.99	99%	**0.10**
Propane	4.19	0.23	18.71	0.01	4.12	0.91	0.46	17.88	46.50	99%	**0.47**
Iso-butane	0.55	0.07	6.22	0.00	1.58	0.22	0.18	5.33	14.15	99%	**0.14**
N-butane	1.24	0.18	15.77	0.00	4.10	0.83	0.46	13.94	36.52	99%	**0.37**
Iso-pentane	0.20	0.05	4.51	0.00	1.45	0.20	0.16	4.19	10.76	99%	**0.11**
N-pentane	0.18	0.06	4.79	0.00	1.69	0.10	0.19	4.51	11.52	99%	**0.12**
Cyclopentanes	0.00	0.00	0.00	0.00	0.00	0.00	0.00	0.00	0.00	99%	**0.00**
Other Hexanes	0.04	0.02	1.74	0.00	0.71	0.06	0.08	1.78	4.44	99%	**0.04**
n-Hexane	0.02	0.01	0.97	0.00	0.43	0.02	0.05	1.04	2.53	99%	**0.03**
Methylcyclopentane	0.01	0.01	0.74	0.00	0.31	0.09	0.03	0.71	1.90	99%	**0.02**
Benzene	0.00	0.00	0.48	0.00	0.04	0.24	0.00	0.32	1.09	99%	**0.01**
Cyclohexane	0.01	0.01	1.13	0.00	0.46	0.32	0.05	1.05	3.04	99%	**0.03**
2,2,4 Trimethylpentane	0.00	0.00	0.00	0.00	0.00	0.00	0.00	0.00	0.00	99%	**0.00**
Other Heptanes	0.00	0.00	0.36	0.00	0.17	0.01	0.02	0.36	0.93	99%	**0.01**
Methylcyclohexane	0.00	0.01	0.62	0.00	0.30	0.09	0.03	0.67	1.73	99%	**0.02**
n-Heptane	0.00	0.01	0.40	0.00	0.20	0.01	0.02	0.40	1.04	99%	**0.01**
Toluene	0.00	0.00	0.26	0.00	0.06	0.38	0.01	0.18	0.88	99%	**0.01**
Octanes	0.00	0.00	0.21	0.00	0.11	0.00	0.01	0.19	0.53	99%	**0.01**
Ethylbenzene	0.00	0.00	0.00	0.00	0.00	0.01	0.00	0.00	0.02	99%	**0.00**
M&P-Xylene	0.00	0.00	0.05	0.00	0.02	0.14	0.00	0.03	0.25	99%	**0.00**
Nonanes	0.00	0.00	0.05	0.00	0.03	0.00	0.00	0.04	0.12	99%	**0.00**
Decanes	0.00	0.00	0.01	0.00	0.01	0.00	0.00	0.01	0.03	99%	**0.00**
Undecanes Plus	0.00	0.00	0.00	0.00	0.00	0.00	0.00	0.00	0.00	99%	**0.00**
Total	**28.20**	**0.69**	**58.83**	**2.04**	**16.59**	**6.12**	**1.84**	**54.68**	**169.00**	**--**	**6.69**
Total VOC	**6.46**	**0.66**	**57.04**	**0.02**	**15.78**	**3.61**	**1.75**	**52.65**	**137.98**	**--**	**1.38**
Total HAP	**0.02**	**0.02**	**1.76**	**0.00**	**0.54**	**0.79**	**0.06**	**1.58**	**4.77**	**--**	**0.05**
Heating Value (Btu/scf)	1,171.41	3,061.07	3,072.55	62.16	3,026.17	1,204.88	3,026.17	3,061.07	**2,586.21**		
Molecular Weight	21.40	54.55	54.81	18.36	55.60	35.69	55.60	59.05	**--**		
SO2 Emissions (lb/hr)	0.00	0.00	0.00	0.00	0.00	0.00	0.00	0.00	**0.00**		
Volumetric Flow (scf/hr)	180.00	4.80	407.36	42.18	113.20	65.12	12.58	411.39	**1,236.64**		
Heat Release (MMBtu/hr)	0.21	0.01	1.25	0.00	0.34	0.08	0.04	1.26	**3.20**		

Criteria Pollutant Emissions from ECD [b]

Component	Emission Rate (lb/hr)	Emission Factor	Emission Factor Units
NO_X	0.44	0.138	lb/MMBtu
CO	0.88	0.2755	lb/MMBtu
SO_2	0.00	--	--
PM_{10}	0.02	7.60	lb/MMscf
$PM_{2.5}$	0.02	7.60	lb/MMscf
H_2S	0.00	--	--

Combustor DRE	99.00	%

Criteria Pollutant Emissions from Pilot Fuel

Component	Emission Rate (lb/hr)	Emission Factor	Emission Factor Units
NO_X	0.03	0.138	lb/MMBtu
CO	0.06	0.2755	lb/MMBtu
SO_2	0.00	--	--
PM_{10}	0.002	7.60	lb/MMscf
$PM_{2.5}$	0.002	7.60	lb/MMscf
H_2S	0.00	--	--

Footnotes:

[a] Uncontrolled stream properties determined via ProMax.

[b] Flare CO and NOx emission factors from TCEQ Air Permit Techincal Guidance for Chemical Sources. PM and PM2.5 emission factors from AP-42, Table 1.4-1 and 1.4-2, July 1998. SO2 emissions assume 100% conversion of H2S to SO2.

XTO Energy, Inc.
Cowboy CDP
COMBUSTOR ANNUAL EMISSIONS

COMBUSTOR - ANNUAL (EPN: ECD1)

Annual Emission Rates and Composition to Combustor[a,b]

Component	Pilot Fuel[c]	Slop Oil Tank (SOTK1)		Gunbarrel (GBS1)		PW Tanks (53-54)		Slop Oil Truck Loading (SOTL)	Total	Destruction Efficiency	Exhaust Stream (controlled)
		W&B Losses	Flashing Losses	W&B Losses	Flashing Losses	W&B Losses	Flashing Losses				
	(ton/yr)	(ton/yr)	(ton/yr)	(ton/yr)	(ton/yr)	(ton/yr)	(ton/yr)	(ton/yr)	(ton/yr)	(%)	(ton/yr)
Water	0.02	0.00	0.07	8.66	1.26	7.36	0.14	0.00	17.51	0%	**17.51**
Hydrogen Sulfide	0.00	0.00	0.00	0.00	0.00	0.00	0.00	0.00	0.00	99%	**0.00**
Nitrogen	1.29	0.00	0.00	0.00	0.01	0.00	0.00	0.00	1.30	99%	**0.01**
Carbon Dioxide	0.29	0.00	0.08	0.17	0.75	3.17	0.08	0.00	4.55	0%	**4.55**
Methane	68.06	0.00	0.38	0.00	0.08	0.02	0.01	0.00	68.54	99%	**0.69**
Ethane	25.54	0.11	7.33	0.02	1.43	0.45	0.16	0.02	35.07	99%	**0.35**
Propane	18.36	0.99	81.96	0.05	18.04	3.97	2.00	0.19	125.56	99%	**1.26**
Iso-butane	2.43	0.29	27.26	0.01	6.93	0.98	0.77	0.06	38.72	99%	**0.39**
N-butane	5.44	0.77	69.07	0.02	17.94	3.62	1.99	0.15	99.01	99%	**0.99**
Iso-pentane	0.87	0.23	19.74	0.00	6.35	0.85	0.71	0.05	28.79	99%	**0.29**
N-pentane	0.80	0.25	20.99	0.00	7.39	0.45	0.82	0.05	30.74	99%	**0.31**
Cyclopentanes	0.00	0.00	0.00	0.00	0.00	0.00	0.00	0.00	0.00	99%	**0.00**
Other Hexanes	0.18	0.10	7.63	0.00	3.11	0.24	0.35	0.02	11.64	99%	**0.12**
n-Hexane	0.08	0.06	4.26	0.00	1.86	0.07	0.21	0.01	6.55	99%	**0.07**
Methylcyclopentane	0.04	0.04	3.24	0.00	1.34	0.41	0.15	0.01	5.22	99%	**0.05**
Benzene	0.01	0.02	2.08	0.00	0.17	1.07	0.02	0.00	3.37	99%	**0.03**
Cyclohexane	0.04	0.06	4.96	0.00	2.03	1.38	0.23	0.01	8.71	99%	**0.09**
2,2,4 Trimethylpentane	0.00	0.00	0.00	0.00	0.00	0.00	0.00	0.00	0.00	99%	**0.00**
Other Heptanes	0.02	0.02	1.60	0.00	0.76	0.04	0.08	0.00	2.52	99%	**0.03**
Methylcyclohexane	0.02	0.04	2.73	0.00	1.33	0.38	0.15	0.01	4.65	99%	**0.05**
n-Heptane	0.01	0.02	1.76	0.00	0.87	0.02	0.10	0.00	2.79	99%	**0.03**
Toluene	0.00	0.01	1.12	0.00	0.25	1.65	0.03	0.00	3.07	99%	**0.03**
Octanes	0.01	0.01	0.92	0.00	0.50	0.01	0.06	0.00	1.50	99%	**0.02**
Ethylbenzene	0.00	0.00	0.02	0.00	0.01	0.05	0.00	0.00	0.09	99%	**0.00**
M&P-Xylene	0.00	0.00	0.21	0.00	0.09	0.62	0.01	0.00	0.94	99%	**0.01**
Nonanes	0.00	0.00	0.21	0.00	0.12	0.00	0.01	0.00	0.35	99%	**0.00**
Decanes	0.00	0.00	0.05	0.00	0.03	0.00	0.00	0.00	0.08	99%	**0.00**
Undecanes Plus	0.00	0.00	0.00	0.00	0.00	0.00	0.00	0.00	0.00	99%	**0.00**
Total	**123.50**	**3.02**	**257.68**	**8.94**	**72.65**	**26.82**	**8.07**	**0.59**	**501.28**	**--**	**26.86**
Total VOC	**28.31**	**2.91**	**249.82**	**0.09**	**69.12**	**15.81**	**7.68**	**0.57**	**374.30**	**--**	**3.74**
Total HAP	**0.09**	**0.09**	**7.70**	**0.00**	**2.39**	**3.46**	**0.27**	**0.02**	**14.01**	**--**	**0.14**
Heating Value (Btu/scf)	1,171.41	3,061.07	3,072.55	62.16	3,026.17	1,204.88	3,026.17	3,061.07	**2350.59**		
Molecular Weight	21.40	54.55	54.81	18.36	55.60	35.69	55.60	59.05	**--**		
SO2 Emissions (tpy)	0.00	0.00	0.00	0.00	0.00	0.00	0.00	0.00	**0.00**		
Volumetric Flow (scf/yr)	1,576,800.00	42,081.68	3,568,481.40	369,526.66	991,646.93	570,418.02	110,182.99	11,175.11	**7,240,312.79**		
Heat Release (MMBtu/yr)	1,847.07	128.81	10,964.34	22.97	3,000.90	687.29	333.43	34.21	**17,019.02**		

Criteria Pollutant Emissions from ECD[b]

Component	Emission Rate	Emission Factor	Emission Factor Units
	(ton/yr)		
NO_X	1.17	0.14	lb/MMBtu
CO	2.34	0.28	lb/MMBtu
SO_2	0.00	--	--
PM_{10}	0.028	7.60	lb/MMscf
$PM_{2.5}$	0.028	7.60	lb/MMscf
H_2S	0.00	--	--

Combustor DRE	99.00	%

Footnotes:

[a] Uncontrolled stream properties determined via ProMax.

[b] Flare CO and NOx emission factors from TCEQ Air Permit Techincal Guidance for Chemical Sources. PM and PM2.5 emission factors from AP-42, Table 1.4-1 and 1.4-2, July 1998. SO2 emissions assume 100% conversion of H2S to SO2.

XTO Energy, Inc.

Cowboy CDP

COMBUSTOR (ECD1) GHG EMISSIONS SUMMARY

Flare Emissions Summary Table - Normal Operations

1) $E_{a,CH4} = V_a * X_{CH4} * [(1- \eta)* Z_L + Z_U$ = **117.74** **SCF/Yr**

Va = **7,240,312.79**
X_{CH4} = **0.0016**
N = **0.99**
Z_L = **1.00**
Z_U = **0.00**

Source	Annual Volume
ECD1	7240313
	7240312.79

2) $E_{a,CO2}$ (uncombusted) = $V_a * X_{CO2}$ = **36.00** **SCF/Yr**

Va = **7,240,312.79**
X_{CO2} = **0.000005**

3) $E_{a,CO2}$ (combusted) = $\Sigma (\eta * Va * Yj * Rj * Z_L)$

N =	**0.99**				
V_a =	**7,240,312.79**		**Rj =**	**$E_{a,CO2}$ =**	
Y_J=	**Methane**	0.0016	1	11,656.01	
	Ethane	0.0661	2	947,571.22	
	Propane	0.4045	3	8,697,207.64	
	Butane	0.3307	4	9,482,057.09	
	Pentane +	0.0000	5	422.24	
Z_L =	**1.00**			**19,138,914.21**	**SCF/Yr**

3) $E_{s,n} = \frac{E_{a,n} * (459.67 + T_s) * P_a}{(459.67 + T_a) * P_s}$

$E_{a,n}$(CH4) =	117.74	=	**105.99**	**SCF/Yr**
$E_{a,n}$(CO2) =	19,138,950.20	=	**17,229,016.08**	**SCF/Yr**
Ts =	60° F			
Ta =	93.7° F	Roswell, AP-42		
Ps =	13.28			
Pa =	12.73	Roswell, AP-42		

4) $Mass_{s,i} = E_{s,i} * \rho_i * 10^3$

$E_{s,i}$ (CH4) =	105.99				
$E_{s,i}$ (CO2) =	17,229,016.08				
p_i (CH4) =	0.0192	kg/ft3	=	0.00	metric tons
p_i (CO2) =	0.0526	kg/ft3	=	906.25	metric tons

5) $CO_2e = CO_2 + (CH_4 X GWP)$

			short tons	CO_2e
CO2 =	906.25	=	998.97	998.97
CH4 =	0.00	=	0.00	0.06
CH4 GWP =	25			**999.02**

XTO ENERGY INC.
Cowboy CDP
THERMAL OXIDIZER HOURLY EMISSIONS (PER UNIT)

THERMAL OXIDIZERS - HOURLY (EPNS: TO1-TO4)

Maximum Hourly Emission Rates and Composition to Thermal Oxidizer[a,b]

Component	TO Assist Fuel	Amine Flash Gas	Amine Reboiler Still Vent	Total	Destruction Efficiency	Exhaust Stream (controlled)
	(lb/hr)	(lb/hr)	(lb/hr)	(lb/hr)	(%)	(lb/hr)
Hydrogen Sulfide	0.00	0.00	0.47	0.47	99%	**0.00**
N2	25.10	2.12	0.03	27.25	0%	**27.25**
Carbon Dioxide	0.00	72.79	24180.07	24252.86	0%	**24252.86**
Methane	658.66	129.51	5.37	793.54	99%	**7.94**
Ethane	257.75	56.10	3.72	317.57	99%	**3.18**
Propane	29.81	27.90	1.52	59.23	99%	**0.59**
i-Butane	0.00	2.41	0.10	2.51	99%	**0.03**
n-Butane	0.00	8.18	0.49	8.67	99%	**0.09**
i-Pentane	0.00	0.75	0.03	0.78	99%	**0.01**
n-Pentane	0.00	0.90	0.04	0.94	99%	**0.01**
n-Hexane	0.00	0.35	0.01	0.36	99%	**0.00**
Benzene	0.00	0.35	0.01	0.36	99%	**0.00**
Toluene	0.00	0.35	0.01	0.36	99%	**0.00**
Ethylbenzene	0.00	0.35	0.01	0.36	99%	**0.00**
Xylene	0.00	0.35	0.01	0.36	99%	**0.00**
Water	0.00	8.21	700.92	709.13	99%	**7.09**
MDEA	0.00	0.00	0.00	0.00	99%	**0.00**
Piperazine	0.00	0.00	0.00	0.00	99%	**0.00**
O2	0.00	0.00	0.00	0.00	99%	**0.00**
Total	**971.32**	**310.62**	**24892.81**	**26174.75**	**--**	**24299.06**
Total VOC	**29.81**	**41.88**	**2.24**	**73.92**	**--**	**0.72**
Total HAP	**0.00**	**1.74**	**0.06**	**1.80**	**--**	**0.02**
Heating Value (Btu/scf)	1,030.84	962.33	1.07	**100.89**		
Molecular Weight	18.97	23.85	26.00	**--**		
SO2 Emissions (lb/hr)	0.00	0.00	0.88	**0.88**		
Volumetric Flow (scf/hr)	19,430.00	4,920.46	223,460.74	**247,811.20**		
Heat Release (MMBtu/hr)	20.03	4.74	0.24	**25.00**		

Criteria Pollutant Emissions from TO [b]

Component	Emission Rate (lb/hr)	Emission Factor	Emission Factor Units
NO_X	3.56	--	--
CO	2.17	--	--
SO_2	0.88	--	--
PM_{10}	0.19	7.60	lb/MMscf
$PM_{2.5}$	0.19	7.60	lb/MMscf
H_2S	0.00	--	--
CO2e	24451.25	--	--
Thermal Oxidizer DRE	99.00	%	

Criteria Pollutant Emissions from Assist Gas

Component	Emission Rate (lb/hr)	Emission Factor	Emission Factor Units
NO_X	0.28	0.068	lb/MMBtu
CO	0.17	--	--
SO_2	0.00	--	--
PM_{10}	0.15	7.60	lb/MMscf
$PM_{2.5}$	0.15	7.60	lb/MMscf
H_2S	0.00	--	--

Calculation Factors:

NO2 MW	46.0100	lb/lb-mole
CO MW	28.0000	lb/lb-mole
CO2 MW	44.0100	lb/lb-mole
H2O MW	18.0150	lb/lb-mole
N2 MW	28.0134	lb/lb-mole
SO2 MW	64.0660	lb/lb-mole
O2 MW	31.9980	lb/lb-mole

Total lb-Mol/hr 1547.26 Zeeco Specifications

PV=nRT

T =	1700	F	Normal Operating Temp
	50,226	lb/hr	Max Design Flowrate
n =	1,547	lbmol/hr	Max Design Flowrate
P =	12.73	psia	Roswell Atmospheric Pressure
R =	10.73	psi ft3 lbmol/°R	Gas Constant
V =	2,817,002	ft3/hr	
	782.5	ft3/sec	

Velocity = Flow Rate/Area

Flow rate =	783	ft3/sec
Inside Diameter =	4.1	feet
Area =	13.4	ft2
Velocity =	58.6	ft/sec

Manufacturer's Guaranteed Outlet Concentration

Pollutant	(ppmv)
NOx	50
CO	50

Notes:

[a] Uncontrolled stream properties determined via ProMax.

[b] TO and NOx CO exhuast emissions gaurantee provided by ZEECO. PM and PM2.5 emission factors from AP-42, Table 1.4-1 and 1.4-2, July 1998. SO2 emissions assume 100% conversion of H2S to SO2.

XTO Energy, Inc.
Cowboy CDP
THERMAL OXIDIZER ANNUAL EMISSIONS (PER UNIT)

THERMAL OXIDIZER - ANNUAL (EPNS: TO1-TO4)

Annual Emission Rates and Composition to Thermal Oxidizer[a,b]

Component	TO Assist Fuel	Amine Flash Gas	Amine Reboiler Still Vent	Total	Destruction Efficiency	Exhaust Stream (controlled)
	(ton/yr)	(ton/yr)	(ton/yr)	(ton/yr)	(%)	(ton/yr)
Hydrogen Sulfide	0.00	0.012	2.04	2.06	99%	**0.02**
N2	109.95	9.28	0.13	119.37	0%	**119.37**
Carbon Dioxide	0.00	318.82	105908.71	106227.53	0%	**106227.53**
Methane	2884.92	567.26	23.52	3475.70	99%	**34.76**
Ethane	1128.94	245.73	16.29	1390.97	99%	**13.91**
Propane	130.55	122.22	6.66	259.43	99%	**2.59**
i-Butane	0.00	10.56	0.42	10.98	99%	**0.11**
n-Butane	0.00	35.82	2.16	37.98	99%	**0.38**
i-Pentane	0.00	3.28	0.12	3.40	99%	**0.03**
n-Pentane	0.00	3.93	0.18	4.10	99%	**0.04**
n-Hexane	0.00	1.52	0.052	1.57	99%	**0.02**
Benzene	0.00	1.52	0.052	1.57	99%	**0.02**
Toluene	0.00	1.52	0.052	1.57	99%	**0.02**
Ethylbenzene	0.00	1.52	0.052	1.57	99%	**0.02**
Xylene	0.00	1.52	0.052	1.57	99%	**0.02**
Water	0.00	35.96	3070.02	3105.98	99%	**31.06**
MDEA	0.00	0.01	0.00	0.01	99%	**0.00**
Piperazine	0.00	0.00	0.00	0.00	99%	**0.00**
O2	0.00	0.00	0.00	0.00	99%	**0.00**
Total	**4254.36**	**1360.50**	**109030.53**	**114645.38**	--	**106429.88**
Total VOC	**130.55**	**183.42**	**9.80**	**323.77**	--	**3.24**
Total HAP	**0.00**	**7.61**	**0.26**	**7.87**	--	**0.079**
Heating Value (Btu/scf)	1,030.84	962.33	1.07	**100.89**		
Molecular Weight	16.81	23.85	26.00	--		
SO2 Emissions (tpy)	0.00	0.022	3.84	**3.87**		
Volumetric Flow (scf/yr)	170,206,800.0	43,103,237.4	1,957,516,073.9	**2,170,826,111.31**		
Heat Release (MMBtu/yr)	175,455.74	41,479.64	2,084.99	**219,020.38**		

Criteria Pollutant Emissions from TO [b]

Component	Emission Rate	Emission Factor	Emission Factor Units
	(ton/yr)		
NO_X	15.59	--	lb/MMBtu
CO	9.49	--	--
SO_2	3.87	--	--
PM_{10}	0.82	7.60	lb/MMscf
$PM_{2.5}$	0.82	7.60	lb/MMscf
H_2S	0.021	--	--
CO2e	107096.46	--	--

Thermal Oxidizer DRE	99.00	%

Calculation Factors:

NO2 MW	46.0100 lb/lb-mole
CO MW	28.0000 lb/lb-mole

Manufacturers Guaranteed Outlet Concentration

Pollutant	(ppmv)
NOx	50
CO	50

Footnotes:

[a] Uncontrolled stream properties determined via ProMax.

[b] TO CO and NOx exhuast emissions gaurantee provided by ZEECO. PM and PM2.5 emission factors from AP-42, Table 1.4-1 and 1.4-2, July 1998. SO2 emissions assume 100% conversion of H2S to SO2.

XTO Energy, Inc.
Cowboy CDP
Produced Water Loading

Truck Loading Losses Calculations

Average BWPD	**4195**
Average BWPY	**1531191**

LL= 12.46 * SPM/T * (1-EFF/100)

Saturation Factor (S) =	0.6
Average True Vapor Pressure of liquid loaded (P) =	11.74
Maximum True Vapor Pressure of liquid loaded (P) =	13.20
Average Temperature of liquid loaded in Rankin (T) =	507.6
Maximum Temperature of liquid loaded in Rankin (T) =	550.0
Molecular Weight (M) =	35.69
Control Efficiency * Collection Efficiency (EFF)=	0
LL-Average (lb Total HC / bbl Throughput) =	0.2592
LL-Maximum (lb Total HC / bbl Throughput) =	0.2689
LL-Average (lb VOC / bbl Throughput) =	**5.6750**
LL-Maximum (lb VOC / bbl Throughput) =	**5.8860**
Estimated Throughput (bbls/Year) =	1531191
Truck Loading Rate (bbls/hour) =	210
Estimated # of Loads (Approximately 1 hr/Load) =	7291

	lb/hr	TPY
Total VOC Emissions	1236.06	4344.77
Total HAP Emissions	3.47	12.20

[1]Molecular Weight and VOC weight % were obtained from Promax

XTO Energy, Inc.
Cowboy CDP
ROAD EMISSIONS (this unit is exempt)

PM_{30} (Total) Emissions $E = k(s/12)^a(W/3)^b$	
a	0.7
b	0.45
k	4.9
Silt Loading	4.8
Vehicle Weight (tons)	28
E-Hourly (lbs/VMT)	7.05
Rain Days	70
E-Annual (lbs/VMT)	5.70
Truckloads per year	27
Driving Distance Per Load (ft)	3000
Annual Distance (miles)	15
Control Efficiency - 15 MPH Limit	0.57
Control Efficiency - Base Course	0.60
Emissions (lbs/hr)	2.76
Emissions (tpy)	0.0076

PM_{10} Emissions $E = k(s/12)^a(W/3)^b$	
a	0.9
b	0.45
k	1.5
Silt Loading	4.8
Vehicle Weight (tons)	28
E-Hourly (lbs/VMT)	1.80
Rain Days	70
E-Annual (lbs/VMT)	1.45
Truckloads per year	27
Driving Distance Per Load (ft)	3000
Annual Distance (miles)	15
Control Efficiency - 15 MPH Limit	0.57
Control Efficiency - Base Course	0.60
Emissions (lbs/hr)	0.70
Emissions (tpy)	0.0019

$PM_{2.5}$ Emissions $E = k(s/12)^a(W/3)^b$	
a	0.9
b	0.45
k	0.15
Silt Loading	4.8
Vehicle Weight (tons)	28
E-Hourly (lbs/VMT)	0.18
Rain Days	70
E-Annual (lbs/VMT)	0.15
Truckloads per year	27
Driving Distance Per Load (ft)	3000
Annual Distance (miles)	15
Control Efficiency - 15 MPH Limit	0.57
Control Efficiency - Base Course	0.60
Emissions (lbs/hr)	0.070
Emissions (tpy)	0.00019

Notes:
Emissions (lbs/hr) = Driving Distance (ft)/ 5280 * E (lbs/VMT) * 4 * (1-control efficiency).
Emissions (tpy) = Annual Distance * E / 2000

References:
EPA. "Compilation of Air Pollutant Emission Factors, Volume 1: Stationary Point and Area Sources," AP-42, Section 13.2.1
WRAP Fugitive Dust Handbook; September 7, 2006

Section 7

Information Used to Determine Emissions

Information Used to Determine Emissions shall include the following:

- ☒ If manufacturer data are used, include specifications for emissions units and control equipment, including control efficiencies specifications and sufficient engineering data for verification of control equipment operation, including design drawings, test reports, and design parameters that affect normal operation.
- ☐ If test data are used, include a copy of the complete test report. If the test data are for an emissions unit other than the one being permitted, the emission units must be identical. Test data may not be used if any difference in operating conditions of the unit being permitted and the unit represented in the test report significantly effect emission rates.
- ☒ If the most current copy of AP-42 is used, reference the section and date located at the bottom of the page. Include a copy of the page containing the emissions factors, and clearly mark the factors used in the calculations.
- ☐ If an older version of AP-42 is used, include a complete copy of the section.
- ☒ If an EPA document or other material is referenced, include a complete copy.
- ☐ Fuel specifications sheet.
- ☒ If computer models are used to estimate emissions, include an input summary (if available) and a detailed report, and a disk containing the input file(s) used to run the model. For tank-flashing emissions, include a discussion of the method used to estimate tank-flashing emissions, relative thresholds (i.e., permit or major source (NSPS, PSD or Title V)), accuracy of the model, the input and output from simulation models and software, all calculations, documentation of any assumptions used, descriptions of sampling methods and conditions, copies of any lab sample analysis.

Supporting Information Related to Proposed Changes

The following documents are attached to support the calculation of the proposed changes:

- ProMax CDP Simulation.
  - IFR1 through IFR14
- Protocol for Equipment Leak Emission Estimates, Table 2-3 and Table 2-4.
  - FUG
- TCEQ Air Permit Techincal Guidance for Chemical Sources, AP-42 Table 1.4-1 and 1.4-2
  - Fl-3's pilot and purge emissions

Supporting Information from Previous Application

The Cowboy CDP gas inlet and NGL inlet streams, labeled as “193H W gas” and “193 W NGL” in the CDP HYSYS model respectively, were determined from reservoir fluid study conducted on a well fluid sample taken from a representative formation in the Delaware Basin. The laboratory report is included as confidential information in Tab 24. The analysis was conducted to determine the type and character of the reservoir fluid, the compositional analyses of the separator gas, the separator hydrocarbon liquid, and the mathematically recombined wellstream fluid. The representative analysis was input into HYSYS as inlet composition of gas and hydrocarbon liquid to simulate the well fluids flowing into the surrounding batteries. XTO Energy then modeled the gas leaving the battery flowing into a compressor station and used the NGL and Gas sales lines from the HYSYS compressor station model as the inlet feeds to Cowboy CDP. Utilizing the CDP HYSYS model, the gas and NGL inlets were used as inputs for the cryogenic gas plant and NGL stabilization processes at the Cowboy facility. The HYSYS simulation results are provided in Section 7. The following HYSYS streams were taken directly from the confidential reservoir fluid study and are included as confidential information in Tab 24:

- “HC Gas” – “Separator gas” from the first-stage separator of the well fluid sample.
- “HC liq” – “Separator HC liquid” from the first-stage separator of the well fluid sample.

The Cowboy CDP oil inlet streams, labeled as "14 RVP" in the CDP HYSYS model, was determined from reservoir fluid study conducted on a well fluid sample taken from a representative formation in the Delaware Basin. The laboratory report is included as confidential information in Tab 24 of the HUSKY CDP XTO Energy PSD Major Source Air Quality Permit Application. The analysis was conducted to determine the type and character of the reservoir fluid, the compositional analyses of the separator gas, the separator hydrocarbon liquid, and the mathematically recombined wellstream fluid. The representative analysis was input into generic HYSYS tank battery model as inlet separator gas and hydrocarbon liquid. The oil inlet in the CDP HYSYS model, 14 RVP, was the sales oil leaving the battery (conservatively modeled to 14 RVP oil).

Crude oil samples taken from the stabilizer outlet and plant inlet were combined together in ProMax to simulate the inlet composition to the IFR tanks. Flowrates were conservatively estimated to combine the unstabilized crude with stabilized crude to determine the maximum allowable emissions.

XTO used process stream compositions generated by the HYSYS process simulation as input compositions in a ProMax simulation for the CDP, in order to simulate tank emissions and consolidate all relevant streams into one model. ProMax and HYSYS simulation results are provided in this section.

The following HYSYS process streams were extracted from the HYSYS report and used in ProMax CDP simulation:

- "Gas Inlet" –Used for fugitive VOC/HAP speciation.
- "To slop oil" – Used for Drain Vessel oil that is sent to the slop tank
- "To GB2" – Used for Drain Vessel water that is sent to the gunbarrel
- "WiO2" – Used for Surge Vessel water that is sent to the gunbarrel
- "Oil OVHD" – Used for gas composition of the stabilizer overhead gas MSS events (process purge gas flaring).
- "Gas Inlet" – Used for Pilot Fuel, LP Header Purge Gas Cryo, HP Header Purge Gas Cryo, LP Header Purge Gas Stabilizer, HP Header Purge Gas Stabilizer

The following HYSYS process streams were extracted from the HYSYS report and used in ProMax Amine simulation:

- "Gas Int" – Used for Inlet Gas composition into Promax Amine Model
- "Residue Gas" – Used for TO Assist Fuel

The following supplemental documents are provided in support of the calculations from previous application:

- HYSYS Simulation
- Promax Amine Unit Simulation
- Heater Manufacturer Data
- Thermal Oxidizer Manufacturer Data
- Flare Manufacturer Data
- Enclosed Combustor Manufacturer Data
- Generator Manufacturer Data
- AP-42 and Other Emissions Guidance as Noted
- Confidential PVT Analysis

Supporting Information Related to Proposed Changes

Process Streams		26	27	29	32
Composition	Status:	Solved	Solved	Solved	Solved
Phase: **Total**	From Block:	50K BBL TANKS	50K BBL TANKS	50K BBL TANKS	MIX-106
	To Block:	MIX-106	MIX-106	MIX-106	--
Mole Fraction			%	%	%
Water			0.0150002	0.000827494	0.00485650
Hydrogen Sulfide			0	0	0
Nitrogen, Atomic			0	0	0
Carbon Dioxide			0.00100001	0.137669	0.0988170
Methane			0	0	0
Ethane			0.255003	21.8501	15.7110
Propane			1.25201	25.8167	18.8335
Isobutane			1.21801	8.81587	6.65595
Butane			4.83005	23.6133	18.2736
Isopentane			3.25303	5.95810	5.18910
Pentane			4.66105	6.28457	5.82303
Cyclopentane			0	0	0
i-C6			3.62804	1.97424	2.44438
n-Hexane			2.84403	1.09401	1.59150
Methylcyclopentane			2.22902	0.778774	1.19105
Benzene			2.09702	0.499749	0.953821
Cyclohexane			4.91405	1.20662	2.26057
2,2,4-Trimethylpentane			0	0	0
i-C7			1.91602	0.313511	0.769072
Methylcyclohexane			5.78906	0.663336	2.12048
n-Heptane			3.84704	0.430377	1.40167
Toluene			3.45803	0.238499	1.15375
Octane			6.98707	0.211754	2.13784
Ethylbenzene			0.190002	0.00421649	0.0570316
m-Xylene			2.19602	0.0425314	0.654726
Nonane			6.47506	0.0520803	1.87801
Decane			5.86906	0.0131471	1.67787
Undecanes Plus			32.0753	3.62125E-06	9.11838
Molar Flow		lbmol/h	lbmol/h	lbmol/h	lbmol/h
Water		0	2.35094E-06	3.26519E-07	2.67746E-06
Hydrogen Sulfide		0	0	0	0
Nitrogen, Atomic		0	0	0	0
Carbon Dioxide		0	1.56730E-07	5.43226E-05	5.44793E-05
Methane		0	0	0	0
Ethane		0	3.99660E-05	0.00862176	0.00866173
Propane		0	0.000196225	0.0101870	0.0103832
Isobutane		0	0.000190897	0.00347863	0.00366953
Butane		0	0.000757004	0.00931752	0.0100745
Isopentane		0	0.000509841	0.00235099	0.00286083
Pentane		0	0.000730517	0.00247981	0.00321033
Cyclopentane		0	0	0	0
i-C6		0	0.000568615	0.000779010	0.00134762
n-Hexane		0	0.000445739	0.000431682	0.000877421
Methylcyclopentane		0	0.000349350	0.000307295	0.000656645
Benzene		0	0.000328662	0.000197195	0.000525857
Cyclohexane		0	0.000770169	0.000476119	0.00124629
2,2,4-Trimethylpentane		0	0	0	0
i-C7		0	0.000300294	0.000123708	0.000424001
Methylcyclohexane		0	0.000907308	0.000261744	0.00116905
n-Heptane		0	0.000602939	0.000169822	0.000772760
Toluene		0	0.000541971	9.41086E-05	0.000636080
Octane		0	0.00109507	8.35553E-05	0.00117862
Ethylbenzene		0	2.97786E-05	1.66378E-06	3.14424E-05
m-Xylene		0	0.000344178	1.67823E-05	0.000360961
Nonane		0	0.00101482	2.05502E-05	0.00103537
Decane		0	0.000919846	5.18767E-06	0.000925034
Undecanes Plus		0	0.00502710	1.42890E-09	0.00502710

Mass Fraction		%	%	%
Water		0.00180123	0.000284521	0.00109160
Hydrogen Sulfide		0	0	0
Nitrogen, Atomic		0	0	0
Carbon Dioxide		0.000293348	0.115636	0.0542595
Methane		0	0	0
Ethane		0.0511089	12.5395	5.89415
Propane		0.367990	21.7273	10.3615
Isobutane		0.471874	9.77949	4.82670
Butane		1.87122	26.1944	13.2515
Isopentane		1.56441	8.20437	4.67110
Pentane		2.24153	8.65392	5.24175
Cyclopentane		0	0	0
i-C6		2.08395	3.24707	2.62815
n-Hexane		1.63361	1.79933	1.71115
Methylcyclopentane		1.25040	1.25090	1.25064
Benzene		1.09182	0.745036	0.929569
Cyclohexane		2.75661	1.93813	2.37366
2,2,4-Trimethylpentane		0	0	0
i-C7		1.27970	0.599567	0.961481
Methylcyclohexane		3.78870	1.24306	2.59765
n-Heptane		2.56942	0.823065	1.75234
Toluene		2.12375	0.419407	1.32632
Octane		5.31988	0.461651	3.04683
Ethylbenzene		0.134453	0.00854361	0.0755430
m-Xylene		1.55400	0.0861786	0.867238
Nonane		5.53543	0.127484	3.00517
Decane		5.56609	0.0357015	2.97854
Undecanes Plus		56.7420	1.83429E-05	30.1937
Mass Flow	**lb/h**	**lb/h**	**lb/h**	**lb/h**
Water	0	4.23529E-05	5.88233E-06	4.82352E-05
Hydrogen Sulfide	0	0	0	0
Nitrogen, Atomic	0	0	0	0
Carbon Dioxide	0	6.89759E-06	0.00239071	0.00239761
Methane	0	0	0	0
Ethane	0	0.00120174	0.259248	0.260450
Propane	0	0.00865268	0.449200	0.457853
Isobutane	0	0.0110953	0.202186	0.213281
Butane	0	0.0439987	0.541555	0.585554
Isopentane	0	0.0367844	0.169621	0.206406
Pentane	0	0.0527059	0.178915	0.231621
Cyclopentane	0	0	0	0
i-C6	0	0.0490006	0.0671314	0.116132
n-Hexane	0	0.0384117	0.0372003	0.0756120
Methylcyclopentane	0	0.0294011	0.0258618	0.0552629
Benzene	0	0.0256724	0.0154032	0.0410756
Cyclohexane	0	0.0648170	0.0400699	0.104887
2,2,4-Trimethylpentane	0	0	0	0
i-C7	0	0.0300900	0.0123957	0.0424858
Methylcyclohexane	0	0.0890850	0.0256996	0.114785
n-Heptane	0	0.0604156	0.0170164	0.0774321
Toluene	0	0.0499363	0.00867102	0.0586074
Octane	0	0.125088	0.00954440	0.134633
Ethylbenzene	0	0.00316145	0.000176635	0.00333808
m-Xylene	0	0.0365397	0.00178170	0.0383214
Nonane	0	0.130156	0.00263567	0.132792
Decane	0	0.130877	0.000738111	0.131615
Undecanes Plus	0	1.33419	3.79230E-07	1.33419

Process Streams		26	27	29	32
Properties	**Status:**	Solved	Solved	Solved	Solved
Phase: **Total**	**From Block:**	**50K BBL TANKS**	**50K BBL TANKS**	**50K BBL TANKS**	**MIX-106**
	To Block:	**MIX-106**	**MIX-106**	**MIX-106**	**--**
Property	**Units**				
Temperature	°F	76.1031	76.1031	76.1031	87.7847
Pressure	psig	0.15	0.15	0.15	0.15
Mole Fraction Vapor	%		0	99.9940	67.6596
Mole Fraction Light Liquid	%		100	0.00599122	32.3404
Mole Fraction Heavy Liquid	%		0	0	0
Phase Mole Fraction	%		100	100	100
Molecular Weight	lb/lbmol		150.026	52.3952	80.1498
Mass Density	lb/ft^3		48.8477	0.119757	0.263679
Molar Flow	lbmol/h	0	0.0156728	0.0394588	0.0551316
Mass Flow	lb/h	0	2.35133	2.06745	4.41878
Vapor Volumetric Flow	ft^3/h	0	0.0481361	17.2636	16.7582
Liquid Volumetric Flow	gpm	0	0.00600138	2.15235	2.08933
Std Vapor Volumetric Flow	MMSCFD	0	0.000142742	0.000359375	0.000502117
Std Liquid Volumetric Flow	sgpm	0	0.00597682	0.00764613	0.0136230
Compressibility			0.00688011	0.980077	0.666394
Specific Gravity			0.783207		
API Gravity			47.5215		
Enthalpy	Btu/h		-1910.07	-1970.72	-3880.79
Mass Enthalpy	Btu/lb		-812.335	-953.215	-878.249
Mass Cp	Btu/(lb*°F)		0.470611	0.398473	0.448550
Ideal Gas CpCv Ratio			1.03762	1.10602	1.06853
Dynamic Viscosity	cP		1.19496		
Kinematic Viscosity	cSt		1.52717		
Thermal Conductivity	Btu/(h*ft*°F)		0.0715409		
Surface Tension	lbf/ft		0.00176512?		
Net Ideal Gas Heating Value	Btu/ft^3		7401.08	2715.40	4047.44
Net Liquid Heating Value	Btu/lb		18573.1	19512.2	19012.5
Gross Ideal Gas Heating Value	Btu/ft^3		7911.89	2943.51	4355.92
Gross Liquid Heating Value	Btu/lb		19865.3	21164.8	20473.3

Process Streams		26	27	29	32
Composition	**Status:**	Solved	Solved	Solved	Solved
Phase: **Vapor**	**From Block:**	**50K BBL TANKS**	**50K BBL TANKS**	**50K BBL TANKS**	**MIX-106**
	To Block:	**MIX-106**	**MIX-106**	**MIX-106**	**--**
Mole Fraction				**%**	**%**
Water				0.000827543	0.00708983
Hydrogen Sulfide				0	0
Nitrogen, Atomic				0	0
Carbon Dioxide				0.137677	0.145349
Methane				0	0
Ethane				21.8513	22.9462
Propane				25.8181	26.7229
Isobutane				8.81627	8.91335
Butane				23.6142	23.4646
Isopentane				5.95811	5.55390
Pentane				6.28446	5.72718
Cyclopentane				0	0
i-C6				1.97399	1.66466
n-Hexane				1.09378	0.883275
Methylcyclopentane				0.778616	0.667630
Benzene				0.499648	0.537350
Cyclohexane				1.20625	1.02680
2,2,4-Trimethylpentane				0	0
i-C7				0.313352	0.266073
Methylcyclohexane				0.662821	0.547089
n-Heptane				0.430042	0.360279
Toluene				0.238293	0.243313
Octane				0.211186	0.199584
Ethylbenzene				0.00420340	0.00411040
m-Xylene				0.0423849	0.0425353
Nonane				0.0516190	0.0588995
Decane				0.0127911	0.0178108
Undecanes Plus				7.87931E-09	8.02220E-06
Molar Flow				**lbmol/h**	**lbmol/h**
Water				3.26519E-07	2.64463E-06
Hydrogen Sulfide				0	0
Nitrogen, Atomic				0	0
Carbon Dioxide				5.43226E-05	5.42179E-05
Methane				0	0
Ethane				0.00862175	0.00855932
Propane				0.0101869	0.00996813
Isobutane				0.00347858	0.00332484
Butane				0.00931732	0.00875272
Isopentane				0.00235086	0.00207170
Pentane				0.00247962	0.00213634
Cyclopentane				0	0
i-C6				0.000778865	0.000620947
n-Hexane				0.000431566	0.000329477
Methylcyclopentane				0.000307214	0.000249038
Benzene				0.000197143	0.000200441
Cyclohexane				0.000475941	0.000383013
2,2,4-Trimethylpentane				0	0
i-C7				0.000123638	9.92498E-05
Methylcyclohexane				0.000261525	0.000204074
n-Heptane				0.000169679	0.000134390
Toluene				9.40217E-05	9.07600E-05
Octane				8.33263E-05	7.44484E-05
Ethylbenzene				1.65851E-06	1.53325E-06
m-Xylene				1.67235E-05	1.58664E-05
Nonane				2.03670E-05	2.19706E-05
Decane				5.04691E-06	6.64373E-06
Undecanes Plus				3.10889E-12	2.99242E-09

Mass Fraction	%	%
Water	0.000284551	0.00247936
Hydrogen Sulfide	0	0
Nitrogen, Atomic	0	0
Carbon Dioxide	0.115648	0.124172
Methane	0	0
Ethane	12.5408	13.3935
Propane	21.7294	22.8740
Isobutane	9.78037	10.0565
Butane	26.1965	26.4740
Isopentane	8.20476	7.77840
Pentane	8.65417	8.02109
Cyclopentane	0	0
i-C6	3.24680	2.78466
n-Hexane	1.79904	1.47755
Methylcyclopentane	1.25070	1.09069
Benzene	0.744920	0.814775
Cyclohexane	1.93761	1.67745
2,2,4-Trimethylpentane	0	0
i-C7	0.599290	0.517535
Methylcyclohexane	1.24215	1.04273
n-Heptane	0.822461	0.700774
Toluene	0.419064	0.435180
Octane	0.460434	0.442552
Ethylbenzene	0.00851747	0.00847089
m-Xylene	0.0858856	0.0876586
Nonane	0.126361	0.146639
Decane	0.0347364	0.0491921
Undecanes Plus	3.99132E-08	4.13293E-05
Mass Flow	**lb/h**	**lb/h**
Water	5.88232E-06	4.76438E-05
Hydrogen Sulfide	0	0
Nitrogen, Atomic	0	0
Carbon Dioxide	0.00239071	0.00238610
Methane	0	0
Ethane	0.259248	0.257371
Propane	0.449198	0.439551
Isobutane	0.202183	0.193247
Butane	0.541543	0.508728
Isopentane	0.169611	0.149471
Pentane	0.178902	0.154134
Cyclopentane	0	0
i-C6	0.0671190	0.0535103
n-Hexane	0.0371904	0.0283928
Methylcyclopentane	0.0258550	0.0209589
Benzene	0.0153992	0.0156568
Cyclohexane	0.0400550	0.0322342
2,2,4-Trimethylpentane	0	0
i-C7	0.0123887	0.00994502
Methylcyclohexane	0.0256781	0.0200372
n-Heptane	0.0170022	0.0134662
Toluene	0.00866301	0.00836248
Octane	0.00951824	0.00850413
Ethylbenzene	0.000176076	0.000162778
m-Xylene	0.00177545	0.00168446
Nonane	0.00261217	0.00281784
Decane	0.000718082	0.000945281
Undecanes Plus	8.25099E-10	7.94189E-07

Process Streams		26	27	29	32
Properties	Status:	Solved	Solved	Solved	Solved
Phase: **Vapor**	From Block:	50K BBL TANKS	50K BBL TANKS	50K BBL TANKS	MIX-106
	To Block:	MIX-106	MIX-106	MIX-106	--
Property	**Units**				
Temperature	°F			76.1031	87.7847
Pressure	psig			0.15	0.15
Mole Fraction Vapor	%			100	100
Mole Fraction Light Liquid	%			0	0
Mole Fraction Heavy Liquid	%			0	0
Phase Mole Fraction	%			99.9940	67.6596
Molecular Weight	lb/lbmol			52.3928	51.5153
Mass Density	lb/ft^3			0.119745	0.115025
Molar Flow	lbmol/h			0.0394564	0.0373018
Mass Flow	lb/h			2.06723	1.92161
Vapor Volumetric Flow	ft^3/h			17.2636	16.7060
Liquid Volumetric Flow	gpm			2.15235	2.08283
Std Vapor Volumetric Flow	MMSCFD			0.000359354	0.000339730
Std Liquid Volumetric Flow	sgpm			0.00764551	0.00717530
Compressibility				0.980135	0.981856
Specific Gravity				1.80899	1.77869
API Gravity					
Enthalpy	Btu/h			-1970.54	-1833.85
Mass Enthalpy	Btu/lb			-953.225	-954.328
Mass Cp	Btu/(lb*°F)			0.398462	0.405791
Ideal Gas CpCv Ratio				1.10603	1.10580
Dynamic Viscosity	cP			0.00788371	0.00809693
Kinematic Viscosity	cSt			4.11010	4.39447
Thermal Conductivity	Btu/(h*ft*°F)			0.00966230	0.0101338
Surface Tension	lbf/ft				
Net Ideal Gas Heating Value	Btu/ft^3			2715.28	2671.88
Net Liquid Heating Value	Btu/lb			19512.2	19526.9
Gross Ideal Gas Heating Value	Btu/ft^3			2943.39	2896.93
Gross Liquid Heating Value	Btu/lb			21164.9	21185.1

Process Streams	26	27	29	32
Composition Status:	Solved	Solved	Solved	Solved
Phase: **Nonspecific Liquid** From Block:	50K BBL TANKS	50K BBL TANKS	50K BBL TANKS	MIX-106
To Block:	MIX-106	MIX-106	MIX-106	--
Mole Fraction		%	%	%
Water		0.0150002	1.27896E-05	0.000184139
Hydrogen Sulfide		0	0	0
Nitrogen, Atomic		0	0	0
Carbon Dioxide		0.00100001	0.00169065	0.00146640
Methane		0	0	0
Ethane		0.255003	0.615145	0.574343
Propane		1.25201	2.56781	2.32789
Isobutane		1.21801	2.16073	1.93325
Butane		4.83005	8.71140	7.41345
Isopentane		3.25303	5.70001	4.42592
Pentane		4.66105	8.02559	6.02357
Cyclopentane		0	0	0
i-C6		3.62804	6.13247	4.07564
n-Hexane		2.84403	4.88553	3.07319
Methylcyclopentane		2.22902	3.41980	2.28610
Benzene		2.09702	2.17536	1.82512
Cyclohexane		4.91405	7.52230	4.84176
2,2,4-Trimethylpentane		0	0	0
i-C7		1.91602	2.96304	1.82140
Methylcyclohexane		5.78906	9.25703	5.41217
n-Heptane		3.84704	6.02495	3.58036
Toluene		3.45803	3.67621	3.05848
Octane		6.98707	9.68584	6.19288
Ethylbenzene		0.190002	0.222681	0.167748
m-Xylene		2.19602	2.48745	1.93549
Nonane		6.47506	7.75009	5.68377
Decane		5.86906	5.95456	5.15087
Undecanes Plus		32.0753	0.0603110	28.1950
Molar Flow		lbmol/h	lbmol/h	lbmol/h
Water		2.35094E-06	3.02353E-13	3.28316E-08
Hydrogen Sulfide		0	0	0
Nitrogen, Atomic		0	0	0
Carbon Dioxide		1.56730E-07	3.99680E-11	2.61457E-07
Methane		0	0	0
Ethane		3.99660E-05	1.45424E-08	0.000102404
Propane		0.000196225	6.07047E-08	0.000415057
Isobutane		0.000190897	5.10811E-08	0.000344695
Butane		0.000757004	2.05943E-07	0.00132180
Isopentane		0.000509841	1.34752E-07	0.000789131
Pentane		0.000730517	1.89730E-07	0.00107399
Cyclopentane		0	0	0
i-C6		0.000568615	1.44975E-07	0.000726678
n-Hexane		0.000445739	1.15497E-07	0.000547944
Methylcyclopentane		0.000349350	8.08461E-08	0.000407607
Benzene		0.000328662	5.14267E-08	0.000325415
Cyclohexane		0.000770169	1.77832E-07	0.000863275
2,2,4-Trimethylpentane		0	0	0
i-C7		0.000300294	7.00480E-08	0.000324752
Methylcyclohexane		0.000907308	2.18842E-07	0.000964977
n-Heptane		0.000602939	1.42434E-07	0.000638370
Toluene		0.000541971	8.69079E-08	0.000545320
Octane		0.00109507	2.28979E-07	0.00110418
Ethylbenzene		2.97786E-05	5.26431E-09	2.99091E-05
m-Xylene		0.000344178	5.88047E-08	0.000345094
Nonane		0.00101482	1.83217E-07	0.00101340
Decane		0.000919846	1.40769E-07	0.000918390
Undecanes Plus		0.00502710	1.42579E-09	0.00502710

Mass Fraction	%	%	%
Water	0.00180123	2.50610E-06	2.36857E-05
Hydrogen Sulfide	0	0	0
Nitrogen, Atomic	0	0	0
Carbon Dioxide	0.000293348	0.000809287	0.000460785
Methane	0	0	0
Ethane	0.0511089	0.201186	0.123307
Propane	0.367990	1.23157	0.732918
Isobutane	0.471874	1.36598	0.802286
Butane	1.87122	5.50721	3.07653
Isopentane	1.56441	4.47308	2.27998
Pentane	2.24153	6.29807	3.10300
Cyclopentane	0	0	0
i-C6	2.08395	5.74805	2.50771
n-Hexane	1.63361	4.57927	1.89091
Methylcyclopentane	1.25040	3.13044	1.37372
Benzene	1.09182	1.84820	1.01790
Cyclohexane	2.75661	6.88581	2.90941
2,2,4-Trimethylpentane	0	0	0
i-C7	1.27970	3.22935	1.30311
Methylcyclohexane	3.78870	9.88606	3.79419
n-Heptane	2.56942	6.56647	2.56154
Toluene	2.12375	3.68420	2.01207
Octane	5.31988	12.0341	5.05086
Ethylbenzene	0.134453	0.257138	0.127156
m-Xylene	1.55400	2.87235	1.46714
Nonane	5.53543	10.8114	5.20486
Decane	5.56609	9.21510	5.23273
Undecanes Plus	56.7420	0.174100	53.4282
Mass Flow	**lb/h**	**lb/h**	**lb/h**
Water	4.23529E-05	5.44698E-12	5.91471E-07
Hydrogen Sulfide	0	0	0
Nitrogen, Atomic	0	0	0
Carbon Dioxide	6.89759E-06	1.75897E-09	1.15066E-05
Methane	0	0	0
Ethane	0.00120174	4.37276E-07	0.00307919
Propane	0.00865268	2.67681E-06	0.0183022
Isobutane	0.0110953	2.96894E-06	0.0200344
Butane	0.0439987	1.19699E-05	0.0768261
Isopentane	0.0367844	9.72217E-06	0.0569349
Pentane	0.0527059	1.36888E-05	0.0774870
Cyclopentane	0	0	0
i-C6	0.0490006	1.24933E-05	0.0626217
n-Hexane	0.0384117	9.95298E-06	0.0472192
Methylcyclopentane	0.0294011	6.80397E-06	0.0343040
Benzene	0.0256724	4.01704E-06	0.0254188
Cyclohexane	0.0648170	1.49662E-05	0.0726528
2,2,4-Trimethylpentane	0	0	0
i-C7	0.0300900	7.01894E-06	0.0325407
Methylcyclohexane	0.0890850	2.14872E-05	0.0947473
n-Heptane	0.0604156	1.42721E-05	0.0639659
Toluene	0.0499363	8.00756E-06	0.0502449
Octane	0.125088	2.61559E-05	0.126128
Ethylbenzene	0.00316145	5.58886E-07	0.00317530
m-Xylene	0.0365397	6.24301E-06	0.0366369
Nonane	0.130156	2.34985E-05	0.129974
Decane	0.130877	2.00289E-05	0.130670
Undecanes Plus	1.33419	3.78405E-07	1.33419

Process Streams		26	27	29	32
Properties	**Status:**	Solved	Solved	Solved	Solved
Phase: **Nonspecific Liquid**	**From Block:**	**50K BBL TANKS**	**50K BBL TANKS**	**50K BBL TANKS**	**MIX-106**
	To Block:	**MIX-106**	**MIX-106**	**MIX-106**	**--**
Property	**Units**				
Temperature	°F		76.1031	76.1031	87.7847
Pressure	psig		0.15	0.15	0.15
Mole Fraction Vapor	%		0	0	0
Mole Fraction Light Liquid	%		100	100	100
Mole Fraction Heavy Liquid	%		0	0	0
Phase Mole Fraction	%		100	0.00599122	32.3404
Molecular Weight	lb/lbmol		150.026	91.9387	140.056
Mass Density	lb/ft^3		48.8477	43.7534	47.8555
Molar Flow	lbmol/h		0.0156728	2.36406E-06	0.0178298
Mass Flow	lb/h		2.35133	0.000217349	2.49717
Vapor Volumetric Flow	ft^3/h		0.0481361	4.96758E-06	0.0521814
Liquid Volumetric Flow	gpm		0.00600138	6.19334E-07	0.00650573
Std Vapor Volumetric Flow	MMSCFD		0.000142742	2.15310E-08	0.000162387
Std Liquid Volumetric Flow	sgpm		0.00597682	6.18150E-07	0.00644765
Compressibility			0.00688011	0.00470714	0.00641614
Specific Gravity			0.783207	0.701528	0.767300
API Gravity			47.5215	67.8908	49.8909
Enthalpy	Btu/h		-1910.07	-0.186635	-2046.94
Mass Enthalpy	Btu/lb		-812.335	-858.688	-819.705
Mass Cp	Btu/(lb*°F)		0.470611	0.497747	0.481454
Ideal Gas CpCv Ratio			1.03762	1.06238	1.03946
Dynamic Viscosity	cP		1.19496	0.405303	0.899419
Kinematic Viscosity	cSt		1.52717	0.578292	1.17330
Thermal Conductivity	Btu/(h*ft*°F)		0.0715409	0.0692066	0.0700308
Surface Tension	lbf/ft		0.00176512?	0.00138226?	0.00166244?
Net Ideal Gas Heating Value	Btu/ft^3		7401.08	4623.51	6925.26
Net Liquid Heating Value	Btu/lb		18573.1	18945.8	18616.6
Gross Ideal Gas Heating Value	Btu/ft^3		7911.89	4972.76	7408.29
Gross Liquid Heating Value	Btu/lb		19865.3	20387.7	19925.5

Process Streams	1	3	4	25
Composition Status:	Solved	Solved	Solved	Solved
Phase: **Total** From Block:	100K BBL TANKS	100K BBL TANKS	100K BBL TANKS	MIX-101
To Block:	MIX-101	MIX-101	MIX-101	--
Mole Fraction		%	%	%
Water		0.0150002	0.000826927	0.00183857
Hydrogen Sulfide		0	0	0
Nitrogen, Atomic		0	0	0
Carbon Dioxide		0.00100001	0.137687	0.127930
Methane		0	0	0
Ethane		0.255003	21.8545	20.3127
Propane		1.25201	25.8185	24.0650
Isobutane		1.21801	8.81572	8.27341
Butane		4.83005	23.6122	22.2716
Isopentane		3.25303	5.95719	5.76418
Pentane		4.66105	6.28336	6.16756
Cyclopentane		0	0	0
i-C6		3.62804	1.97367	2.09176
n-Hexane		2.84403	1.09364	1.21858
Methylcyclopentane		2.22902	0.778517	0.882050
Benzene		2.09702	0.499553	0.613575
Cyclohexane		4.91405	1.20618	1.47084
2,2,4-Trimethylpentane		0	0	0
i-C7		1.91602	0.313378	0.427770
Methylcyclohexane		5.78906	0.663045	1.02892
n-Heptane		3.84704	0.430173	0.674058
Toluene		3.45803	0.238376	0.468186
Octane		6.98707	0.211618	0.695230
Ethylbenzene		0.190002	0.00421375	0.0174747
m-Xylene		2.19602	0.0425032	0.196215
Nonane		6.47506	0.0520456	0.510501
Decane		5.86906	0.0131401	0.431118
Undecanes Plus		32.0753	3.61377E-06	2.28944
Mass Fraction		%	%	%
Water		0.00180123	0.000284341	0.000557979
Hydrogen Sulfide		0	0	0
Nitrogen, Atomic		0	0	0
Carbon Dioxide		0.000293348	0.115656	0.0948455
Methane		0	0	0
Ethane		0.0511089	12.5427	10.2893
Propane		0.367990	21.7299	17.8763
Isobutane		0.471874	9.77981	8.10071
Butane		1.87122	26.1944	21.8067
Isopentane		1.56441	8.20354	7.00588
Pentane		2.24153	8.65270	7.49616
Cyclopentane		0	0	0
i-C6		2.08395	3.24631	3.03662
n-Hexane		1.63361	1.79883	1.76903
Methylcyclopentane		1.25040	1.25055	1.25053
Benzene		1.09182	0.744782	0.807386
Cyclohexane		2.75661	1.93752	2.08528
2,2,4-Trimethylpentane		0	0	0
i-C7		1.27970	0.599344	0.722076
Methylcyclohexane		3.78870	1.24258	1.70188
n-Heptane		2.56942	0.822716	1.13781
Toluene		2.12375	0.419213	0.726700
Octane		5.31988	0.461380	1.33783
Ethylbenzene		0.134453	0.00853848	0.0312528
m-Xylene		1.55400	0.0861259	0.350921
Nonane		5.53543	0.127406	1.10298
Decane		5.56609	0.0356843	1.03334
Undecanes Plus		56.7420	1.83059E-05	10.2359

Mass Flow	lb/h	lb/h	lb/h	lb/h
Water	0	3.38286E-05	2.42626E-05	5.80913E-05
Hydrogen Sulfide	0	0	0	0
Nitrogen, Atomic	0	0	0	0
Carbon Dioxide	0	5.50933E-06	0.00986887	0.00987438
Methane	0	0	0	0
Ethane	0	0.000959869	1.07026	1.07122
Propane	0	0.00691118	1.85420	1.86111
Isobutane	0	0.00886220	0.834505	0.843367
Butane	0	0.0351432	2.23515	2.27030
Isopentane	0	0.0293809	0.700003	0.729384
Pentane	0	0.0420979	0.738329	0.780427
Cyclopentane	0	0	0	0
i-C6	0	0.0391384	0.277005	0.316144
n-Hexane	0	0.0306807	0.153493	0.184174
Methylcyclopentane	0	0.0234836	0.106709	0.130193
Benzene	0	0.0205054	0.0635517	0.0840571
Cyclohexane	0	0.0517715	0.165327	0.217099
2,2,4-Trimethylpentane	0	0	0	0
i-C7	0	0.0240339	0.0511416	0.0751755
Methylcyclohexane	0	0.0711551	0.106028	0.177184
n-Heptane	0	0.0482559	0.0702018	0.118458
Toluene	0	0.0398858	0.0357711	0.0756569
Octane	0	0.0999120	0.0393692	0.139281
Ethylbenzene	0	0.00252515	0.000728583	0.00325373
m-Xylene	0	0.0291854	0.00734906	0.0365345
Nonane	0	0.103960	0.0108715	0.114832
Decane	0	0.104536	0.00304492	0.107581
Undecanes Plus	0	1.06566	1.56203E-06	1.06566
Std Vapor Volumetric Flow	**MMSCFD**	**MMSCFD**	**MMSCFD**	**MMSCFD**
Water	0	1.71021E-08	1.22660E-08	2.93680E-08
Hydrogen Sulfide	0	0	0	0
Nitrogen, Atomic	0	0	0	0
Carbon Dioxide	0	1.14014E-09	2.04233E-06	2.04347E-06
Methane	0	0	0	0
Ethane	0	2.90735E-07	0.000324171	0.000324462
Propane	0	1.42745E-06	0.000382971	0.000384398
Isobutane	0	1.38869E-06	0.000130765	0.000132154
Butane	0	5.50686E-06	0.000350244	0.000355750
Isopentane	0	3.70887E-06	8.83640E-05	9.20729E-05
Pentane	0	5.31418E-06	9.32021E-05	9.85163E-05
Cyclopentane	0	0	0	0
i-C6	0	4.13642E-06	2.92758E-05	3.34123E-05
n-Hexane	0	3.24255E-06	1.62222E-05	1.94648E-05
Methylcyclopentane	0	2.54137E-06	1.15479E-05	1.40892E-05
Benzene	0	2.39087E-06	7.40995E-06	9.80082E-06
Cyclohexane	0	5.60264E-06	1.78915E-05	2.34941E-05
2,2,4-Trimethylpentane	0	0	0	0
i-C7	0	2.18450E-06	4.64839E-06	6.83290E-06
Methylcyclohexane	0	6.60026E-06	9.83507E-06	1.64353E-05
n-Heptane	0	4.38611E-06	6.38082E-06	1.07669E-05
Toluene	0	3.94260E-06	3.53587E-06	7.47847E-06
Octane	0	7.96614E-06	3.13897E-06	1.11051E-05
Ethylbenzene	0	2.16626E-07	6.25032E-08	2.79129E-07
m-Xylene	0	2.50374E-06	6.30457E-07	3.13420E-06
Nonane	0	7.38239E-06	7.72001E-07	8.15439E-06
Decane	0	6.69147E-06	1.94909E-07	6.88638E-06
Undecanes Plus	0	3.65699E-05	5.36036E-11	3.65700E-05

Process Streams		1	3	4	25
Properties	**Status:**	Solved	Solved	Solved	Solved
Phase: **Total**	**From Block:**	100K BBL TANKS	100K BBL TANKS	100K BBL TANKS	MIX-101
	To Block:	MIX-101	MIX-101	MIX-101	--
Property	**Units**				
Temperature	°F	93.58	93.58	93.58	95.0384
Pressure	psig	0.15	0.15	0.15	0.15
Molecular Weight	lb/lbmol		150.026	52.3925	59.3613
Molar Flow	lbmol/h	0	0.0125184	0.162866	0.175384
Std Vapor Volumetric Flow	MMSCFD	0	0.000114013	0.00148332	0.00159733
Std Liquid Volumetric Flow	sgpm	0	0.00477388	0.0315587	0.0363326
Net Ideal Gas Heating Value	Btu/ft^3		7401.08	2715.26	3049.72
Gross Ideal Gas Heating Value	Btu/ft^3		7911.89	2943.37	3298.01

Process Streams		1	3	4	25
Composition	**Status:**	Solved	Solved	Solved	Solved
Phase: **Vapor**	**From Block:**	100K BBL TANKS	100K BBL TANKS	100K BBL TANKS	MIX-101
	To Block:	MIX-101	MIX-101	MIX-101	--
Mole Fraction				%	%
Water				0.000826927	0.00198544
Hydrogen Sulfide				0	0
Nitrogen, Atomic				0	0
Carbon Dioxide				0.137687	0.138323
Methane				0	0
Ethane				21.8545	21.9377
Propane				25.8185	25.8704
Isobutane				8.81572	8.81080
Butane				23.6122	23.5527
Isopentane				5.95719	5.89823
Pentane				6.28336	6.20627
Cyclopentane				0	0
i-C6				1.97367	1.93017
n-Hexane				1.09364	1.06103
Methylcyclopentane				0.778517	0.769466
Benzene				0.499553	0.536253
Cyclohexane				1.20618	1.19746
2,2,4-Trimethylpentane				0	0
i-C7				0.313378	0.314625
Methylcyclohexane				0.663045	0.663953
n-Heptane				0.430173	0.434892
Toluene				0.238376	0.272218
Octane				0.211618	0.245560
Ethylbenzene				0.00421375	0.00507695
m-Xylene				0.0425032	0.0525983
Nonane				0.0520456	0.0761662
Decane				0.0131401	0.0241094
Undecanes Plus				3.61377E-06	1.35878E-05

Mass Fraction	%	%
Water	0.000284341	0.000682751
Hydrogen Sulfide	0	0
Nitrogen, Atomic	0	0
Carbon Dioxide	0.115656	0.116200
Methane	0	0
Ethane	12.5427	12.5914
Propane	21.7299	21.7752
Isobutane	9.77981	9.77511
Butane	26.1944	26.1305
Isopentane	8.20354	8.12297
Pentane	8.65270	8.54721
Cyclopentane	0	0
i-C6	3.24631	3.17500
n-Hexane	1.79883	1.74532
Methylcyclopentane	1.25055	1.23611
Benzene	0.744782	0.799560
Cyclohexane	1.93752	1.92367
2,2,4-Trimethylpentane	0	0
i-C7	0.599344	0.601775
Methylcyclohexane	1.24258	1.24437
n-Heptane	0.822716	0.831806
Toluene	0.419213	0.478764
Octane	0.461380	0.535421
Ethylbenzene	0.00853848	0.0102884
m-Xylene	0.0861259	0.106590
Nonane	0.127406	0.186467
Decane	0.0356843	0.0654787
Undecanes Plus	1.83059E-05	6.88357E-05
Mass Flow	**lb/h**	**lb/h**
Water	2.42626E-05	5.79729E-05
Hydrogen Sulfide	0	0
Nitrogen, Atomic	0	0
Carbon Dioxide	0.00986887	0.00986661
Methane	0	0
Ethane	1.07026	1.06915
Propane	1.85420	1.84895
Isobutane	0.834505	0.830013
Butane	2.23515	2.21876
Isopentane	0.700003	0.689729
Pentane	0.738329	0.725750
Cyclopentane	0	0
i-C6	0.277005	0.269592
n-Hexane	0.153493	0.148197
Methylcyclopentane	0.106709	0.104959
Benzene	0.0635517	0.0678913
Cyclohexane	0.165327	0.163340
2,2,4-Trimethylpentane	0	0
i-C7	0.0511416	0.0510972
Methylcyclohexane	0.106028	0.105661
n-Heptane	0.0702018	0.0706294
Toluene	0.0357711	0.0406522
Octane	0.0393692	0.0454631
Ethylbenzene	0.000728583	0.000873599
m-Xylene	0.00734906	0.00905067
Nonane	0.0108715	0.0158331
Decane	0.00304492	0.00555985
Undecanes Plus	1.56203E-06	5.84490E-06

Std Vapor Volumetric Flow	MMSCFD	MMSCFD
Water	1.22660E-08	2.93082E-08
Hydrogen Sulfide	0	0
Nitrogen, Atomic	0	0
Carbon Dioxide	2.04233E-06	2.04186E-06
Methane	0	0
Ethane	0.000324171	0.000323835
Propane	0.000382971	0.000381887
Isobutane	0.000130765	0.000130061
Butane	0.000350244	0.000347675
Isopentane	8.83640E-05	8.70671E-05
Pentane	9.32021E-05	9.16143E-05
Cyclopentane	0	0
i-C6	2.92758E-05	2.84924E-05
n-Hexane	1.62222E-05	1.56625E-05
Methylcyclopentane	1.15479E-05	1.13585E-05
Benzene	7.40995E-06	7.91594E-06
Cyclohexane	1.78915E-05	1.76764E-05
2,2,4-Trimethylpentane	0	0
i-C7	4.64839E-06	4.64436E-06
Methylcyclohexane	9.83507E-06	9.80098E-06
n-Heptane	6.38082E-06	6.41969E-06
Toluene	3.53587E-06	4.01836E-06
Octane	3.13897E-06	3.62484E-06
Ethylbenzene	6.25032E-08	7.49437E-08
m-Xylene	6.30457E-07	7.76433E-07
Nonane	7.72001E-07	1.12433E-06
Decane	1.94909E-07	3.55893E-07
Undecanes Plus	5.36036E-11	2.00577E-10

Process Streams		1	3	4	25
Properties	Status:	Solved	Solved	Solved	Solved
Phase: Vapor	From Block:	100K BBL TANKS	100K BBL TANKS	100K BBL TANKS	MIX-101
	To Block:	MIX-101	MIX-101	MIX-101	--
Property	Units				
Temperature	°F			93.58	95.0384
Pressure	psig			0.15	0.15
Molecular Weight	lb/lbmol			52.3925	52.3885
Molar Flow	lbmol/h			0.162866	0.162079
Std Vapor Volumetric Flow	MMSCFD			0.00148332	0.00147616
Std Liquid Volumetric Flow	sgpm			0.0315587	0.0314021
Net Ideal Gas Heating Value	Btu/ft^3			2715.26	2714.72
Gross Ideal Gas Heating Value	Btu/ft^3			2943.37	2942.68

Process Streams	1	3	4	25
Composition Status:	Solved	Solved	Solved	Solved
Phase: **Light Liquid** From Block:	100K BBL TANKS	100K BBL TANKS	100K BBL TANKS	MIX-101
To Block:	MIX-101	MIX-101	MIX-101	--
Mole Fraction		%		%
Water		0.0150002		4.93651E-05
Hydrogen Sulfide		0		0
Nitrogen, Atomic		0		0
Carbon Dioxide		0.00100001		0.00132729
Methane		0		0
Ethane		0.255003		0.517480
Propane		1.25201		2.07227
Isobutane		1.21801		1.72687
Butane		4.83005		6.66430
Isopentane		3.25303		4.13111
Pentane		4.66105		5.69596
Cyclopentane		0		0
i-C6		3.62804		4.06022
n-Hexane		2.84403		3.13790
Methylcyclopentane		2.22902		2.25356
Benzene		2.09702		1.55552
Cyclohexane		4.91405		4.80108
2,2,4-Trimethylpentane		0		0
i-C7		1.91602		1.80612
Methylcyclohexane		5.78906		5.47507
n-Heptane		3.84704		3.58761
Toluene		3.45803		2.85550
Octane		6.98707		6.17318
Ethylbenzene		0.190002		0.168506
m-Xylene		2.19602		1.94577
Nonane		6.47506		5.80164
Decane		5.86906		5.38935
Undecanes Plus		32.0753		30.1796
Mass Fraction		%		%
Water		0.00180123		6.16279E-06
Hydrogen Sulfide		0		0
Nitrogen, Atomic		0		0
Carbon Dioxide		0.000293348		0.000404791
Methane		0		0
Ethane		0.0511089		0.107828
Propane		0.367990		0.633225
Isobutane		0.471874		0.695533
Butane		1.87122		2.68419
Isopentane		1.56441		2.06544
Pentane		2.24153		2.84782
Cyclopentane		0		0
i-C6		2.08395		2.42465
n-Hexane		1.63361		1.87387
Methylcyclopentane		1.25040		1.31429
Benzene		1.09182		0.841994
Cyclohexane		2.75661		2.80001
2,2,4-Trimethylpentane		0		0
i-C7		1.27970		1.25412
Methylcyclohexane		3.78870		3.72526
n-Heptane		2.56942		2.49114
Toluene		2.12375		1.82322
Octane		5.31988		4.88652
Ethylbenzene		0.134453		0.123969
m-Xylene		1.55400		1.43150
Nonane		5.53543		5.15634
Decane		5.56609		5.31377
Undecanes Plus		56.7420		55.5049

Mass Flow	lb/h	lb/h
Water	3.38286E-05	1.18322E-07
Hydrogen Sulfide	0	0
Nitrogen, Atomic	0	0
Carbon Dioxide	5.50933E-06	7.77172E-06
Methane	0	0
Ethane	0.000959869	0.00207022
Propane	0.00691118	0.0121575
Isobutane	0.00886220	0.0133538
Butane	0.0351432	0.0515348
Isopentane	0.0293809	0.0396552
Pentane	0.0420979	0.0546763
Cyclopentane	0	0
i-C6	0.0391384	0.0465517
n-Hexane	0.0306807	0.0359771
Methylcyclopentane	0.0234836	0.0252334
Benzene	0.0205054	0.0161658
Cyclohexane	0.0517715	0.0537584
2,2,4-Trimethylpentane	0	0
i-C7	0.0240339	0.0240783
Methylcyclohexane	0.0711551	0.0715226
n-Heptane	0.0482559	0.0478284
Toluene	0.0398858	0.0350047
Octane	0.0999120	0.0938182
Ethylbenzene	0.00252515	0.00238014
m-Xylene	0.0291854	0.0274838
Nonane	0.103960	0.0989985
Decane	0.104536	0.102021
Undecanes Plus	1.06566	1.06566
Std Vapor Volumetric Flow	**MMSCFD**	**MMSCFD**
Water	1.71021E-08	5.98175E-11
Hydrogen Sulfide	0	0
Nitrogen, Atomic	0	0
Carbon Dioxide	1.14014E-09	1.60833E-09
Methane	0	0
Ethane	2.90735E-07	6.27050E-07
Propane	1.42745E-06	2.51104E-06
Isobutane	1.38869E-06	2.09251E-06
Butane	5.50686E-06	8.07539E-06
Isopentane	3.70887E-06	5.00582E-06
Pentane	5.31418E-06	6.90201E-06
Cyclopentane	0	0
i-C6	4.13642E-06	4.91992E-06
n-Hexane	3.24255E-06	3.80231E-06
Methylcyclopentane	2.54137E-06	2.73073E-06
Benzene	2.39087E-06	1.88488E-06
Cyclohexane	5.60264E-06	5.81765E-06
2,2,4-Trimethylpentane	0	0
i-C7	2.18450E-06	2.18854E-06
Methylcyclohexane	6.60026E-06	6.63435E-06
n-Heptane	4.38611E-06	4.34725E-06
Toluene	3.94260E-06	3.46011E-06
Octane	7.96614E-06	7.48027E-06
Ethylbenzene	2.16626E-07	2.04186E-07
m-Xylene	2.50374E-06	2.35777E-06
Nonane	7.38239E-06	7.03006E-06
Decane	6.69147E-06	6.53048E-06
Undecanes Plus	3.65699E-05	3.65698E-05

Process Streams		1	3	4	25
Properties	**Status:**	Solved	Solved	Solved	Solved
Phase: **Light Liquid**	**From Block:**	100K BBL TANKS	100K BBL TANKS	100K BBL TANKS	MIX-101
	To Block:	MIX-101	MIX-101	MIX-101	--
Property	**Units**				
Temperature	°F		93.58		95.0384
Pressure	psig		0.15		0.15
Molecular Weight	lb/lbmol		150.026		144.306
Molar Flow	lbmol/h		0.0125184		0.0133047
Std Vapor Volumetric Flow	MMSCFD		0.000114013		0.000121174
Std Liquid Volumetric Flow	sgpm		0.00477388		0.00493044
Net Ideal Gas Heating Value	Btu/ft^3		7401.08		7130.83
Gross Ideal Gas Heating Value	Btu/ft^3		7911.89		7626.75

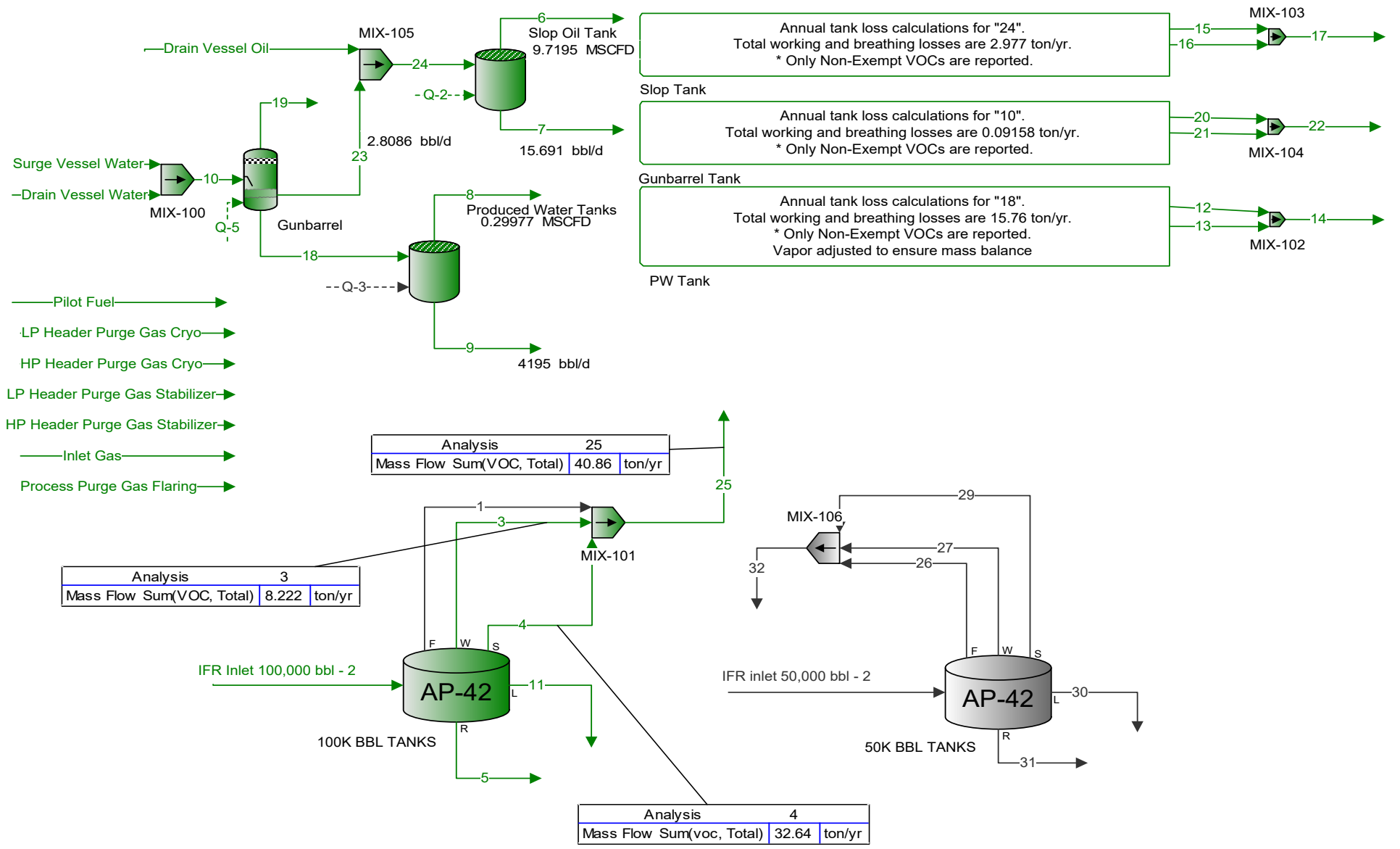
Drain Vessel Oil
MIX-105
24
6
Slop Oil Tank
9.7195 MSCFD
Q-2
7
15.691 bbl/d
19
23
2.8086 bbl/d
Surge Vessel Water
Drain Vessel Water
10
MIX-100
Q-5
Gunbarrel
18
8
Produced Water Tanks
0.29977 MSCFD
Q-3
9
4195 bbl/d
Annual tank loss calculations for "24".
Total working and breathing losses are 2.977 ton/yr.
* Only Non-Exempt VOCs are reported.
Slop Tank
Annual tank loss calculations for "10".
Total working and breathing losses are 0.09158 ton/yr.
* Only Non-Exempt VOCs are reported.
Gunbarrel Tank
Annual tank loss calculations for "18".
Total working and breathing losses are 15.76 ton/yr.
* Only Non-Exempt VOCs are reported.
Vapor adjusted to ensure mass balance
PW Tank
15
16
MIX-103
17
20
21
MIX-104
22
12
13
MIX-102
14
Pilot Fuel
LP Header Purge Gas Cryo
HP Header Purge Gas Cryo
LP Header Purge Gas Stabilizer
HP Header Purge Gas Stabilizer
Inlet Gas
Process Purge Gas Flaring
Analysis 25
Mass Flow Sum(VOC, Total) 40.86 ton/yr
25
1
3
MIX-101
Analysis 3
Mass Flow Sum(VOC, Total) 8.222 ton/yr
4
IFR Inlet 100,000 bbl - 2
AP-42
11
100K BBL TANKS
5
Analysis 4
Mass Flow Sum(voc, Total) 32.64 ton/yr
29
MIX-106
27
26
32
IFR inlet 50,000 bbl - 2
AP-42
30
50K BBL TANKS
31

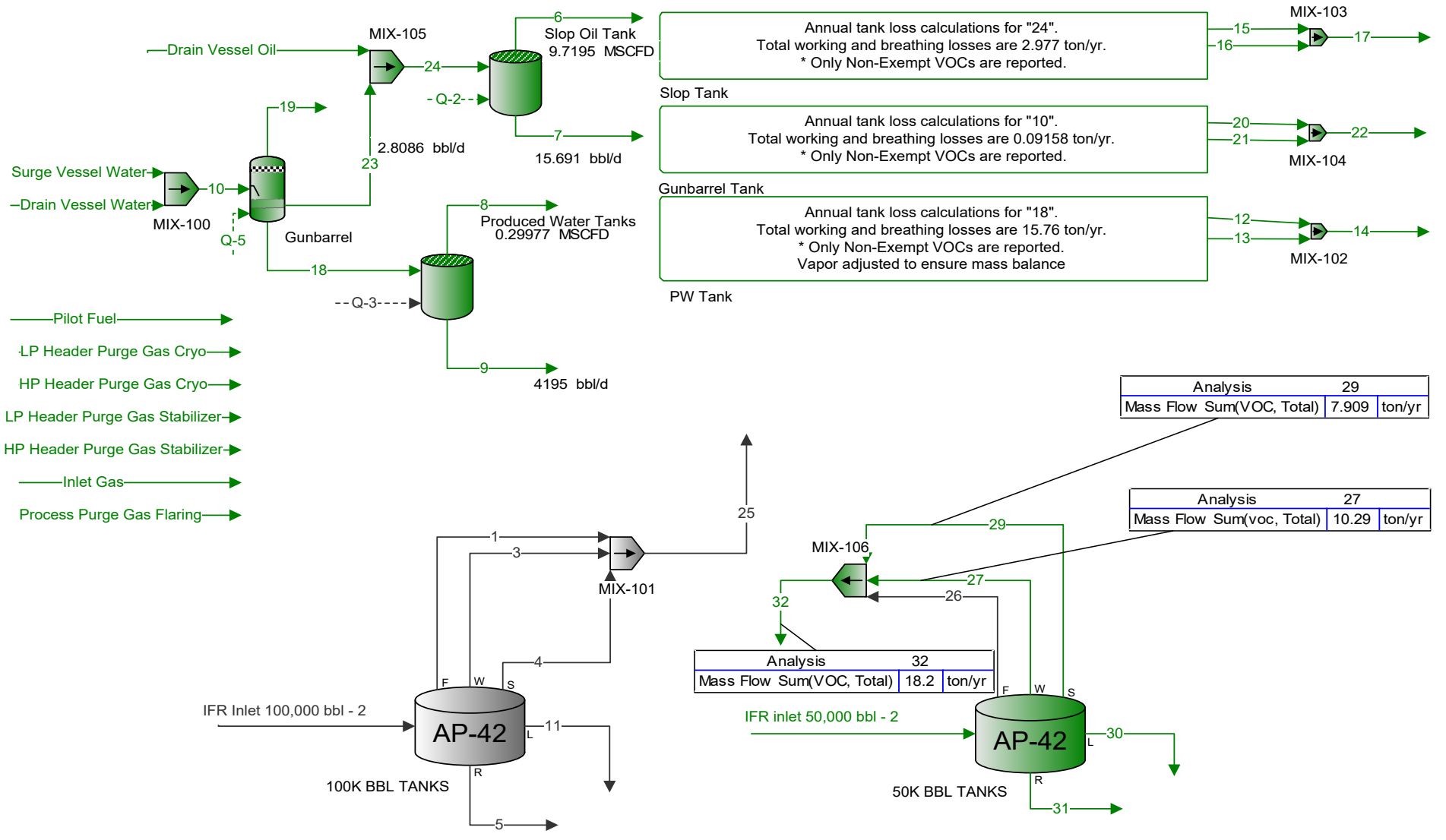

Analysis	29	
Mass Flow Sum(VOC, Total)	7.909	ton/yr

Analysis	27	
Mass Flow Sum(voc, Total)	10.29	ton/yr

Analysis	32	
Mass Flow Sum(VOC, Total)	18.2	ton/yr

United States
Environmental Protection
Agency

Office of Air Quality
Planning and Standards
Research Triangle Park NC 27711

EPA-453/R-95-017
November 1995

Air

EPA

Protocol for Equipment Leak Emission Estimates

TABLE 2-3. MARKETING TERMINAL AVERAGE EMISSION FACTORS

Equipment type	Service	Emission factor (kg/hr/source)[a]
Valves	Gas	1.3E-05
	Light Liquid	4.3E-05
Pump seals	Gas	6.5E-05
	Light Liquid	5.4E-04
Others (compressors and others)[b]	Gas	1.2E-04
	Light Liquid	1.3E-04
Fittings (connectors and flanges)[c]	Gas	4.2E-05
	Light Liquid	8.0E-06

[a]These factors are for total organic compound emission rates (including non-VOC's such as methane and ethane).

[b]The "other" equipment type should be applied for any equipment type other than fittings, pumps, or valves.

[c]"Fittings" were not identified as flanges or non-flanged connectors; therefore, the fitting emissions were estimated by averaging the estimates from the connector and the flange correlation equations.

Supporting Information from Previous Application

October 5, 2020

FESCO, Ltd.
1100 FESCO Avenue - Alice, Texas 78332

For: XTO Energy Inc.
6401 N. Holiday Hill Road
Midland, Texas 79707

Sample: Cowboy CDP - 1200 Stabalizer Outlet
Hydrocarbon Liquid
Sampled @ 34 psig & 109 °F

Date Sampled: 07/15/2020 Job Number: 202162.022

CHROMATOGRAPH EXTENDED ANALYSIS - GPA 2186-M

COMPONENT	MOL %	LIQ VOL %	WT %
Nitrogen	0.000	0.000	0.000
Carbon Dioxide	0.000	0.000	0.000
Methane	0.000	0.000	0.000
Ethane	0.000	0.000	0.000
Propane	1.910	0.825	0.523
Isobutane	0.902	0.463	0.326
n-Butane	3.552	1.756	1.282
2,2 Dimethylpropane	0.042	0.025	0.019
Isopentane	2.286	1.311	1.024
n-Pentane	3.499	1.989	1.568
2,2 Dimethylbutane	0.048	0.032	0.026
Cyclopentane	0.000	0.000	0.000
2,3 Dimethylbutane	0.293	0.188	0.157
2 Methylpentane	1.575	1.025	0.843
3 Methylpentane	0.900	0.576	0.481
n-Hexane	2.711	1.748	1.451
Heptanes Plus	82.282	90.062	92.299
Totals:	100.000	100.000	100.000

Characteristics of Heptanes Plus:

Specific Gravity ----------	0.8199	(Water=1)
°API Gravity ----------	41.09	@ 60°F
Molecular Weight ----------	180.6	
Vapor Volume ----------	14.05	CF/Gal
Weight ----------	6.83	Lbs/Gal

Characteristics of Total Sample:

Specific Gravity ----------	0.8000	(Water=1)
°API Gravity ----------	45.38	@ 60°F
Molecular Weight----------	161.0	
Vapor Volume ----------	15.38	CF/Gal
Weight ----------	6.67	Lbs/Gal

Base Conditions: 15.025 PSI & 60 °F

Certified: FESCO, Ltd. - Alice, Texas

Sampled By: (24) DF
Analyst: DLD
Processor: DJV
Cylinder ID: PL-37552

David Dannhaus 361-661-7015

FESCO, Ltd. Job Number: 202162.022

TANKS DATA INPUT REPORT - GPA 2186-M

COMPONENT	Mol %	LiqVol %	Wt %
Carbon Dioxide	0.000	0.000	0.000
Nitrogen	0.000	0.000	0.000
Methane	0.000	0.000	0.000
Ethane	0.000	0.000	0.000
Propane	1.910	0.825	0.523
Isobutane	0.902	0.463	0.326
n-Butane	3.594	1.781	1.301
Isopentane	2.286	1.311	1.024
n-Pentane	3.499	1.989	1.568
Other C-6's	2.816	1.821	1.507
Heptanes	10.772	6.878	6.224
Octanes	13.944	9.927	9.236
Nonanes	7.218	6.062	5.682
Decanes Plus	45.241	64.193	68.001
Benzene	0.614	0.269	0.298
Toluene	1.568	0.823	0.897
E-Benzene	0.381	0.230	0.251
Xylenes	1.886	1.142	1.244
n-Hexane	2.711	1.748	1.451
2,2,4 Trimethylpentane	0.659	0.537	0.467
Totals:	100.000	100.000	100.000

Characteristics of Total Sample:

Specific Gravity ----------	0.8000	(Water=1)
°API Gravity ----------	45.38	@ 60°F
Molecular Weight----------	161.0	
Vapor Volume ----------	15.38	CF/Gal
Weight ----------	6.67	Lbs/Gal

Characteristics of Decanes (C10) Plus:

Specific Gravity ----------	0.8474	(Water=1)
Molecular Weight----------	242.0	

Characteristics of Atmospheric Sample:

°API Gravity ----------	------	@ 60°F
Reid Vapor Pressure Equivalent (D-6377)----------	------	psi

QUALITY CONTROL CHECK			
	Sampling Conditions	Test Samples	
Cylinder Number	------	------	------
Pressure, PSIG	------	------	------
Temperature, °F	------	------	------

* Sample used for analysis

FESCO, Ltd. Job Number: 202162.022

TOTAL EXTENDED REPORT - GPA 2186-M

COMPONENT	Mol %	LiqVol %	Wt %
Nitrogen	0.000	0.000	0.000
Carbon Dioxide	0.000	0.000	0.000
Methane	0.000	0.000	0.000
Ethane	0.000	0.000	0.000
Propane	1.910	0.825	0.523
Isobutane	0.902	0.463	0.326
n-Butane	3.552	1.756	1.282
2,2 Dimethylpropane	0.042	0.025	0.019
Isopentane	2.286	1.311	1.024
n-Pentane	3.499	1.989	1.568
2,2 Dimethylbutane	0.048	0.032	0.026
Cyclopentane	0.000	0.000	0.000
2,3 Dimethylbutane	0.293	0.188	0.157
2 Methylpentane	1.575	1.025	0.843
3 Methylpentane	0.900	0.576	0.481
n-Hexane	2.711	1.748	1.451
Methylcyclopentane	1.730	0.960	0.904
Benzene	0.614	0.269	0.298
Cyclohexane	2.998	1.600	1.567
2-Methylhexane	0.842	0.614	0.524
3-Methylhexane	0.981	0.706	0.610
2,2,4 Trimethylpentane	0.659	0.537	0.467
Other C-7's	1.549	1.064	0.954
n-Heptane	2.672	1.933	1.663
Methylcyclohexane	4.945	3.117	3.016
Toluene	1.568	0.823	0.897
Other C-8's	6.607	4.889	4.523
n-Octane	2.392	1.922	1.697
E-Benzene	0.381	0.230	0.251
M & P Xylenes	1.450	0.882	0.956
O-Xylene	0.436	0.260	0.287
Other C-9's	5.498	4.543	4.311
n-Nonane	1.721	1.518	1.371
Other C-10's	5.472	4.969	4.801
n-decane	1.374	1.322	1.214
Undecanes(11)	5.383	5.016	4.915
Dodecanes(12)	4.039	4.066	4.039
Tridecanes(13)	3.939	4.251	4.282
Tetradecanes(14)	3.235	3.740	3.818
Pentadecanes(15)	2.837	3.514	3.630
Hexadecanes(16)	2.049	2.711	2.825
Heptadecanes(17)	1.820	2.548	2.680
Octadecanes(18)	1.665	2.454	2.597
Nonadecanes(19)	1.474	2.262	2.407
Eicosanes(20)	1.140	1.819	1.948
Heneicosanes(21)	0.949	1.594	1.716
Docosanes(22)	0.854	1.495	1.619
Tricosanes(23)	0.749	1.359	1.480
Tetracosanes(24)	0.637	1.196	1.309
Pentacosanes(25)	0.670	1.306	1.436
Hexacosanes(26)	0.483	0.975	1.077
Heptacosanes(27)	0.506	1.059	1.175
Octacosanes(28)	0.487	1.056	1.175
Nonacosanes(29)	0.371	0.830	0.927
Triacontanes(30)	0.329	0.759	0.850
Hentriacontanes Plus(31+)	4.777	13.892	16.082
Total	100.000	100.000	100.000

October 5, 2020

FESCO, Ltd.
1100 FESCO Avenue - Alice, Texas 78332

For: XTO Energy Inc.
6401 N. Holiday Hill Road
Midland, Texas 79707

Sample: Cowboy CDP - Plant Inlet (Sample No. 2)
Hydrocarbon Liquid
Sampled @ 15 psig & 94 °F

Date Sampled: 07/15/2020 Job Number: 202162.012

CHROMATOGRAPH EXTENDED ANALYSIS - GPA 2186-M

COMPONENT	MOL %	LIQ VOL %	WT %
Nitrogen	0.029	0.005	0.005
Carbon Dioxide	0.000	0.000	0.000
Methane	0.034	0.009	0.003
Ethane	0.395	0.164	0.073
Propane	2.148	0.919	0.582
Isobutane	0.929	0.472	0.331
n-Butane	3.668	1.796	1.309
2,2 Dimethylpropane	0.049	0.029	0.022
Isopentane	2.315	1.315	1.026
n-Pentane	3.480	1.959	1.541
2,2 Dimethylbutane	0.041	0.026	0.022
Cyclopentane	0.000	0.000	0.000
2,3 Dimethylbutane	0.000	0.000	0.000
2 Methylpentane	1.753	1.130	0.927
3 Methylpentane	0.837	0.530	0.443
n-Hexane	2.485	1.587	1.315
Heptanes Plus	81.837	90.059	92.402
Totals:	100.000	100.000	100.000

Characteristics of Heptanes Plus:

Specific Gravity	0.8224	(Water=1)
°API Gravity	40.56	@ 60°F
Molecular Weight	183.9	
Vapor Volume	13.84	CF/Gal
Weight	6.85	Lbs/Gal

Characteristics of Total Sample:

Specific Gravity	0.8016	(Water=1)
°API Gravity	45.03	@ 60°F
Molecular Weight	162.9	
Vapor Volume	15.23	CF/Gal
Weight	6.68	Lbs/Gal

Base Conditions: 15.025 PSI & 60 °F

Certified: FESCO, Ltd. - Alice, Texas

Sampled By: (24) DF
Analyst: DLD
Processor: DJV
Cylinder ID: PL-32699

David Dannhaus 361-661-7015

FESCO, Ltd. Job Number: 202162.012

TANKS DATA INPUT REPORT - GPA 2186-M

COMPONENT	Mol %	LiqVol %	Wt %
Carbon Dioxide	0.000	0.000	0.000
Nitrogen	0.029	0.005	0.005
Methane	0.034	0.009	0.003
Ethane	0.395	0.164	0.073
Propane	2.148	0.919	0.582
Isobutane	0.929	0.472	0.331
n-Butane	3.717	1.825	1.331
Isopentane	2.315	1.315	1.026
n-Pentane	3.480	1.959	1.541
Other C-6's	2.630	1.686	1.391
Heptanes	10.319	6.481	5.869
Octanes	12.967	9.118	8.474
Nonanes	6.740	5.603	5.243
Decanes Plus	46.596	65.864	69.662
Benzene	0.730	0.317	0.350
Toluene	1.725	0.897	0.976
E-Benzene	0.328	0.197	0.214
Xylenes	1.833	1.099	1.195
n-Hexane	2.485	1.587	1.315
2,2,4 Trimethylpentane	0.598	0.483	0.420
Totals:	100.000	100.000	100.000

Characteristics of Total Sample:

Specific Gravity ----------	0.8016	(Water=1)
°API Gravity ----------	45.03	@ 60°F
Molecular Weight----------	162.9	
Vapor Volume ----------	15.23	CF/Gal
Weight ----------	6.68	Lbs/Gal

Characteristics of Decanes (C10) Plus:

Specific Gravity ----------	0.8478	(Water=1)
Molecular Weight----------	243.5	

Characteristics of Atmospheric Sample:

°API Gravity ----------	------	@ 60°F
Reid Vapor Pressure Equivalent (D-6377)----------	------	psi

QUALITY CONTROL CHECK			
	Sampling Conditions	Test Samples	
Cylinder Number	------	------	------
Pressure, PSIG	------	------	------
Temperature, °F	------	------	------

* Sample used for analysis

FESCO, Ltd. Job Number: 202162.012

TOTAL EXTENDED REPORT - GPA 2186-M

COMPONENT	Mol %	LiqVol %	Wt %
Nitrogen	0.029	0.005	0.005
Carbon Dioxide	0.000	0.000	0.000
Methane	0.034	0.009	0.003
Ethane	0.395	0.164	0.073
Propane	2.148	0.919	0.582
Isobutane	0.929	0.472	0.331
n-Butane	3.668	1.796	1.309
2,2 Dimethylpropane	0.049	0.029	0.022
Isopentane	2.315	1.315	1.026
n-Pentane	3.480	1.959	1.541
2,2 Dimethylbutane	0.041	0.026	0.022
Cyclopentane	0.000	0.000	0.000
2,3 Dimethylbutane	0.000	0.000	0.000
2 Methylpentane	1.753	1.130	0.927
3 Methylpentane	0.837	0.530	0.443
n-Hexane	2.485	1.587	1.315
Methylcyclopentane	1.675	0.921	0.866
Benzene	0.730	0.317	0.350
Cyclohexane	3.099	1.639	1.601
2-Methylhexane	0.821	0.592	0.505
3-Methylhexane	0.874	0.623	0.538
2,2,4 Trimethylpentane	0.598	0.483	0.420
Other C-7's	1.448	0.986	0.882
n-Heptane	2.402	1.721	1.478
Methylcyclohexane	4.792	2.992	2.889
Toluene	1.725	0.897	0.976
Other C-8's	6.021	4.412	4.074
n-Octane	2.155	1.714	1.511
E-Benzene	0.328	0.197	0.214
M & P Xylenes	1.396	0.841	0.910
O-Xylene	0.437	0.258	0.285
Other C-9's	5.182	4.241	4.016
n-Nonane	1.558	1.361	1.227
Other C-10's	5.165	4.646	4.480
n-decane	1.283	1.223	1.121
Undecanes(11)	5.285	4.877	4.769
Dodecanes(12)	3.973	3.960	3.927
Tridecanes(13)	3.972	4.245	4.267
Tetradecanes(14)	3.299	3.777	3.848
Pentadecanes(15)	2.933	3.597	3.709
Hexadecanes(16)	2.133	2.795	2.907
Heptadecanes(17)	1.937	2.684	2.818
Octadecanes(18)	1.823	2.659	2.808
Nonadecanes(19)	1.647	2.503	2.659
Eicosanes(20)	1.285	2.030	2.169
Heneicosanes(21)	1.107	1.840	1.977
Docosanes(22)	1.037	1.796	1.941
Tricosanes(23)	0.942	1.692	1.839
Tetracosanes(24)	0.844	1.571	1.715
Pentacosanes(25)	0.855	1.650	1.810
Hexacosanes(26)	0.611	1.222	1.346
Heptacosanes(27)	0.645	1.339	1.482
Octacosanes(28)	0.598	1.283	1.425
Nonacosanes(29)	0.466	1.032	1.150
Triacontanes(30)	0.443	1.011	1.130
Hentriacontanes Plus(31+)	4.317	12.433	14.365
Total	100.000	100.000	100.000

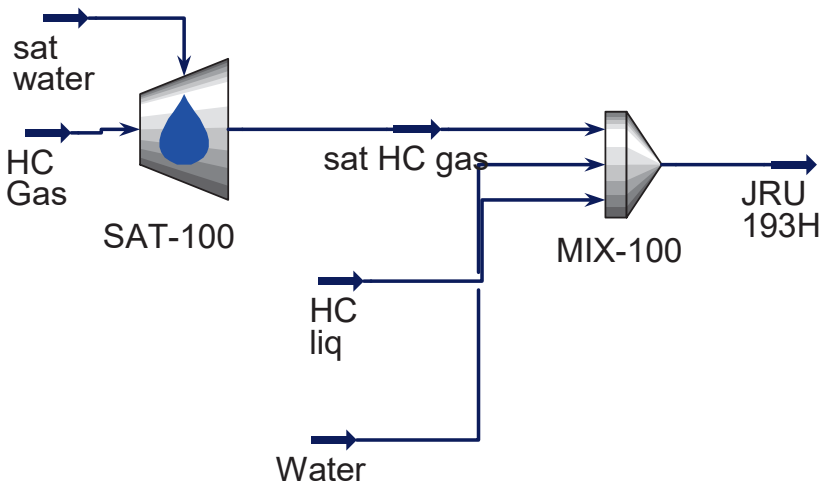
sat
water
HC
Gas
SAT-100
sat HC gas
MIX-100
JRU
193H
HC
liq
Water

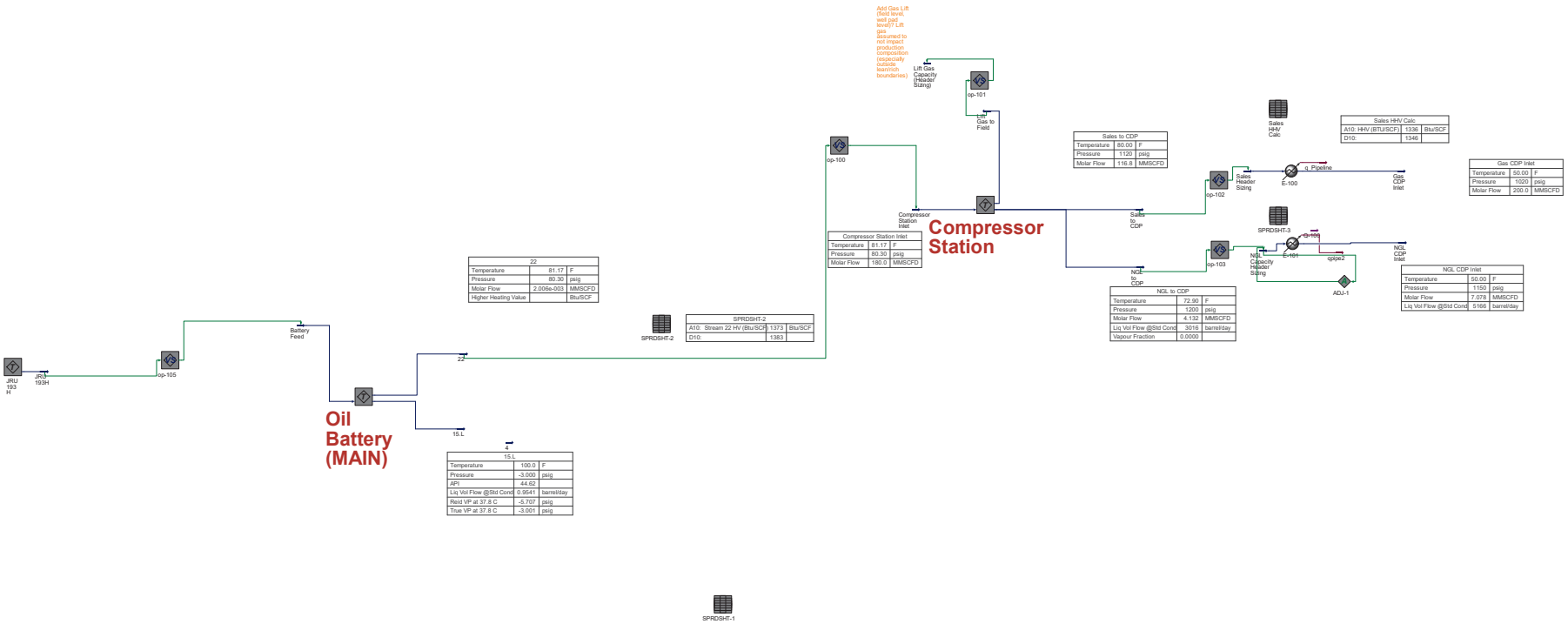

Compressor Station Inlet		
Temperature	81.17	F
Pressure	80.30	psig
Molar Flow	180.0	MMSCFD

22		
Temperature	81.17	F
Pressure	80.30	psig
Molar Flow	2.006e-003	MMSCFD
Higher Heating Value		Btu/SCF

SPRDSHT-2		
A10: Stream 22 HV (Btu/SCF)	1373	Btu/SCF
D10:	1383	

15.L		
Temperature	100.0	F
Pressure	-3.000	psig
API	44.62	
Liq Vol Flow @Std Cond	0.9541	barrel/day
Reid VP at 37.8 C	-5.707	psig
True VP at 37.8 C	-3.001	psig

Sales to CDP		
Temperature	80.00	F
Pressure	1120	psig
Molar Flow	116.8	MMSCFD

NGL to CDP		
Temperature	72.90	F
Pressure	1200	psig
Molar Flow	4.132	MMSCFD
Liq Vol Flow @Std Cond	3016	barrel/day
Vapour Fraction	0.0000	

Sales HHV Calc		
A10: HHV (BTU/SCF)	1336	Btu/SCF
D10:	1346	

Gas CDP Inlet		
Temperature	50.00	F
Pressure	1020	psig
Molar Flow	200.0	MMSCFD

NGL CDP Inlet		
Temperature	50.00	F
Pressure	1150	psig
Molar Flow	7.078	MMSCFD
Liq Vol Flow @Std Cond	5166	barrel/day

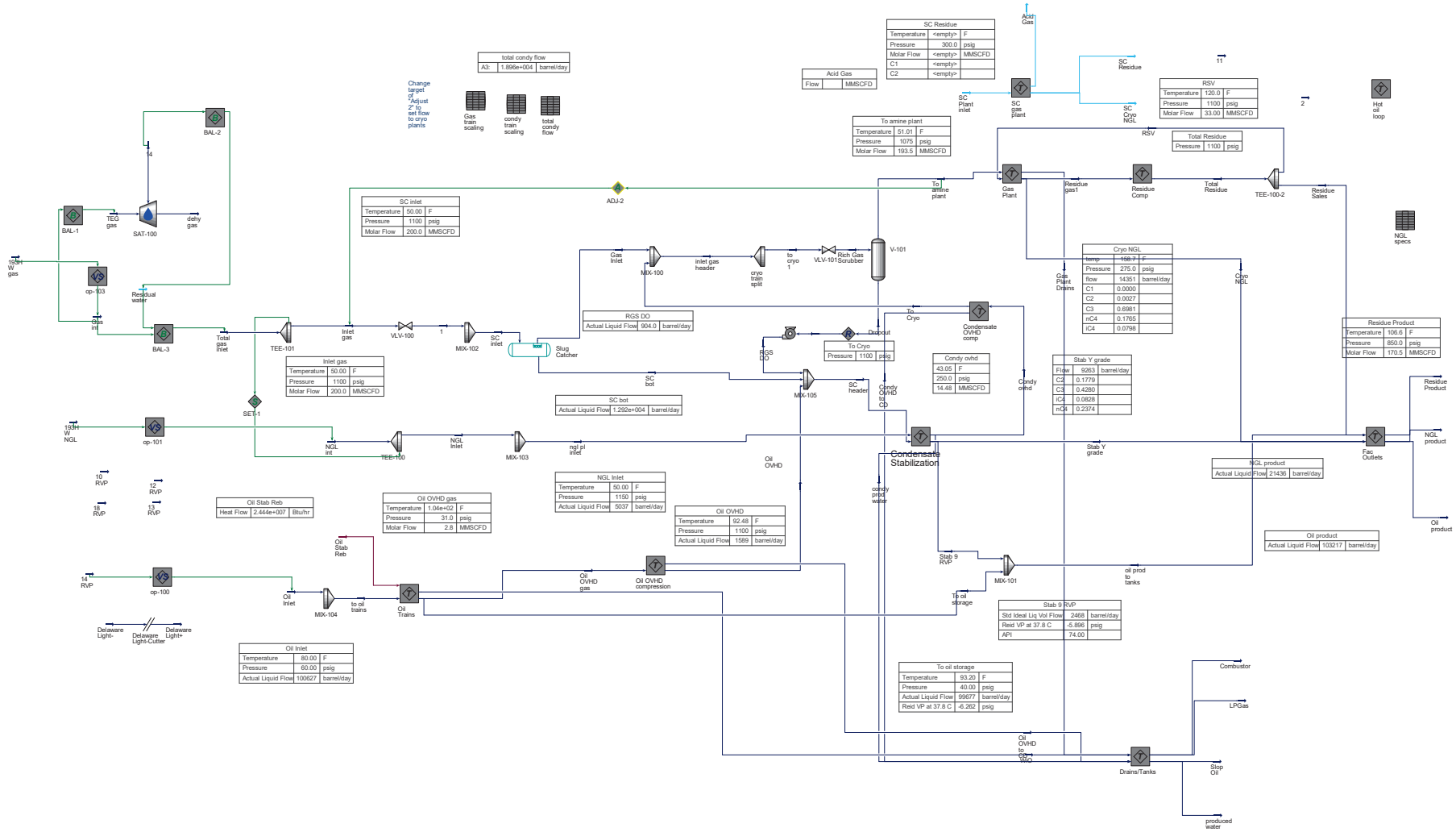

SC Residue
Temperature <empty> F
Pressure 300.0 psig
Molar Flow <empty> MMSCFD
C1 <empty>
C2 <empty>
Acid Gas
Flow MMSCFD
total condy flow
A3: 1.896e+004 barrel/day
Change target of "Adjust 2" to set flow to cryo plants
Gas train scaling
condy train scaling
total condy flow
Acid Gas
SC Plant inlet
SC gas plant
SC Residue
SC Cryo NGL
RSV
Temperature 120.0 F
Pressure 1100 psig
Molar Flow 33.00 MMSCFD
Hot oil loop
To amine plant
Temperature 51.01 F
Pressure 1075 psig
Molar Flow 193.5 MMSCFD
Total Residue
Pressure 1100 psig
BAL-2
BAL-1
TEG gas
SAT-100
dehy gas
ADJ-2
SC inlet
Temperature 50.00 F
Pressure 1100 psig
Molar Flow 200.0 MMSCFD
To amine plant
Gas Plant
Residue gas1
Residue Comp
Total Residue
TEE-100-2
Residue Sales
NGL specs
Cryo NGL
temp 158.7 F
Pressure 275.0 psig
flow 14351 barrel/day
C1 0.0000
C2 0.0027
C3 0.6981
nC4 0.1765
iC4 0.0798
Gas Inlet
MIX-100
inlet gas header
cryo train split
to cryo 1
VLV-101
Rich Gas Scrubber
V-101
Gas Plant Drains
Cryo NGL
RGS DO
Actual Liquid Flow 904.0 barrel/day
Condensate OVHD comp
To Cryo
Pressure 1100 psig
Condy ovhd
43.05 F
250.0 psig
14.48 MMSCFD
Stab Y grade
Flow 9263 barrel/day
C2 0.1779
C3 0.4280
iC4 0.0828
nC4 0.2374
Residue Product
Temperature 106.6 F
Pressure 850.0 psig
Molar Flow 170.5 MMSCFD
Residual water
Gas int
BAL-3
Total gas inlet
TEE-101
Inlet gas
VLV-100
MIX-102
SC inlet
Slug Catcher
Inlet gas
Temperature 50.00 F
Pressure 1100 psig
Molar Flow 200.0 MMSCFD
SC bot
MIX-105
SC header
Condy OVHD to CD
SC bot
Actual Liquid Flow 1.292e+004 barrel/day
SET-1
Condensate Stabilization
Stab Y grade
Fac Outlets
NGL product
Actual Liquid Flow 21436 barrel/day
NGL product
Oil product
Actual Liquid Flow 103217 barrel/day
Oil product
Oil OVHD
NGL int
TEE-100
NGL Inlet
MIX-103
ngl pl inlet
NGL Inlet
Temperature 50.00 F
Pressure 1150 psig
Actual Liquid Flow 5037 barrel/day
Oil Stab Reb
Heat Flow 2.444e+007 Btu/hr
Oil OVHD gas
Temperature 1.04e+02 F
Pressure 31.0 psig
Molar Flow 2.8 MMSCFD
Oil OVHD
Temperature 92.48 F
Pressure 1100 psig
Actual Liquid Flow 1589 barrel/day
condy prod water
Oil Stab Reb
Oil OVHD gas
Oil OVHD compression
Stab 9 RVP
MIX-101
oil prod to tanks
To oil storage
Stab 9 RVP
Std Ideal Liq Vol Flow 2468 barrel/day
Reid VP at 37.8 C -5.896 psig
API 74.00
Oil Inlet
MIX-104
to oil trains
Oil Trains
Delaware Light-
Delaware Light-Cutter
Delaware Light+
Oil Inlet
Temperature 80.00 F
Pressure 60.00 psig
Actual Liquid Flow 100627 barrel/day
To oil storage
Temperature 93.20 F
Pressure 40.00 psig
Actual Liquid Flow 99677 barrel/day
Reid VP at 37.8 C -6.262 psig
Combustor
LPGas
Oil OVHD to oil cap WO
Drains/Tanks
Slop Oil
produced water

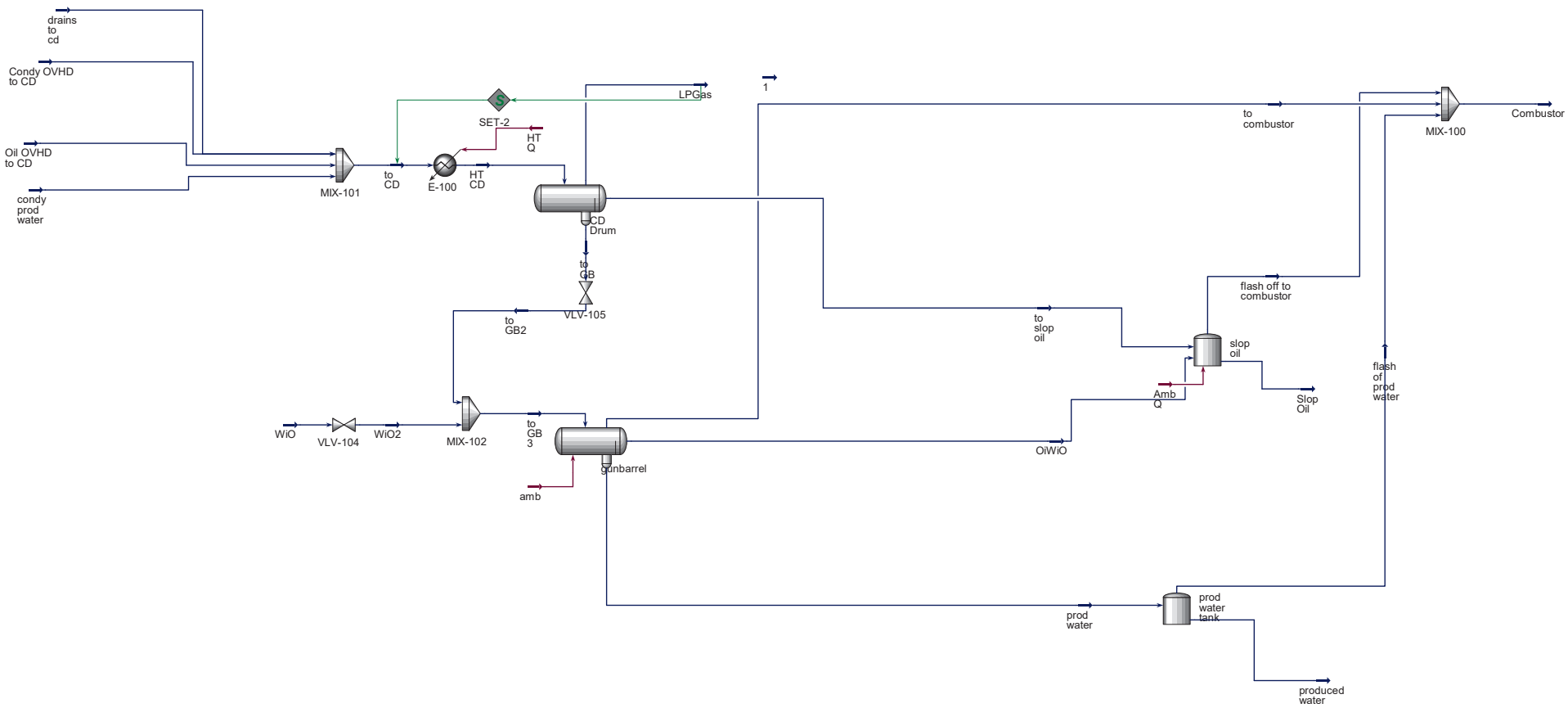
drains
to
cd
Condy OVHD
to CD
Oil OVHD
to CD
condy
prod
water
MIX-101
to
CD
E-100
HT
CD
SET-2
HT
Q
LPGas
CD
Drum
to
GB
VLV-105
to
GB2
1
to
combustor
MIX-100
Combustor
flash off to
combustor
to
slop
oil
slop
oil
Amb
Q
Slop
Oil
flash
of
prod
water
WiO
VLV-104
WiO2
MIX-102
to
GB
3
Gunbarrel
amb
OiWiO
prod
water
prod
water
tank
produced
water

XTO ENERGY INC.
Cowboy CDP
PROCESS SIMULATION COMPONENTS

PROCESS SIMULATION COMPONENTS - INLET GAS

HYSYS PROCESS STREAM NAME:	Gas Int
HYSYS COMPONENTS	
Component	Mole Frac
Oxygen	0.00000
H2S	0.00000
Nitrogen	0.01480
CO2	0.00112
Methane	0.70205
Ethane	0.15319
Propane	0.08529
i-Butane	0.00984
n-Butane	0.02370
22-Mpropane	0.00011
i-Pentane	0.00377
n-Pentane	0.00378
22-Mbutane	0.00002
Cyclopentane	0.00000
23-Mbutane	0.00012
2-Mpentane	0.00042
3-Mpentane	0.00021
n-Hexane	0.00046
Hexanes*	0.00000
Mcyclopentan	0.00027
Benzene	0.00006
Cyclohexane	0.00028
2-Mhexane	0.00004
3-Mhexane	0.00003
224-Mpentane	0.00000
n-Heptane	0.00006
Heptanes*	0.00007
Mcyclohexane	0.00012
Toluene	0.00002
n-Octane	0.00000
Octanes*	0.00003
E-Benzene	0.00000
m-Xylene	0.00000
o-Xylene	0.00000
p-Xylene	0.00000
Nonanes*	0.00000
Decanes*	0.00000
Undecanes_3*	0.00000
Dodecanes_3*	0.00000
Triadecanes_3*	0.00000
Tetradecanes_3*	0.00000
Pentadecanes_3*	0.00000
Hexadecanes_3*	0.00000
Heptadecanes_3*	0.00000
Octadecanes_3*	0.00000
Nonadecanes_3*	0.00000
eicosanes_3*	0.00000
Heneicosanes_3*	0.00000
Dodocosanes_3*	0.00000
Triacosanes_3*	0.00000
Tetracosanes_3*	0.00000
Pentacosanes_3*	0.00000
Hexacosanes_3*	0.00000
Heptacosanes_3*	0.00000
Octacosanes_3*	0.00000
Nonacosanes_3*	0.00000
Triacontanes*	0.00000
C31+_2*	0.00000
H2O	0.00015
NC30*	0.00000
n-Nonane	0.00000
n-Decane	0.00000
NC31-35*	0.00000
TexaTherm	0.00000
NC31-35_1*	0.00000
CO	0.00000
TOTALS	1.000

PROMAX PROCESS STREAM NAME:	Inlet Gas AMINE	
PROMAX COMPONENTS		
Component	Mole Frac	WT%
Hydrogen Sulfide	0.000	0.00
N2	0.015	1.82
Carbon Dioxide	0.001	0.22
Methane	0.702	49.42
Ethane	0.153	20.21
Propane	0.085	16.50
i-Butane	0.010	2.51
n-Butane	0.024	6.04
i-Pentane	0.004	1.23
n-Pentane	0.004	1.20
n-Hexane	0.002	0.83
Water	0.000	0.01
MDEA	0.000	0.00
Piperazine	0.000	0.00
O2	0.000	0.00
Total	1.00000	

Specific Gravity	
Molecular Weight (lb/lbmol)	
VOC WT%	11.82
HAP WT%	0.826

EXXONMOBIL TECHNICAL COM Bedford, MA USA	Case Name:	Cowboy CDP CSH V6.4 winter-conservative.hsc
	Unit Set:	CSH 5b1
	Date/Time:	Tue Mar 10 15:37:37 2020

Material Stream: Gas int

Fluid Package: Peng Robinson

Property Package: Peng-Robinson

CONDITIONS

	Overall	Vapour Phase	Liquid Phase		
Vapour / Phase Fraction	0.9008	0.9008	0.9992		
Temperature: (F)	50.00	50.00	50.00		
Pressure: (psig)	1150 *	1150	1150		
Molar Flow (MMSCFD)	200.0	180.2	19.85		
Mass Flow (lb/hr)	5.006e+005	4.291e+005	7.145e+004		
Std Ideal Liq Vol Flow (barrel/day)	9.490e+004	8.363e+004	1.127e+004		
Molar Enthalpy (Btu/lbmole)	-3.667e+004	-3.575e+004	-4.500e+004		
Molar Entropy (Btu/lbmole-F)	33.47	34.06	28.14		
Heat Flow (Btu/hr)	-8.053e+008	-7.072e+008	-9.807e+007		
Liq Vol Flow @Std Cond (barrel/day)	3.538e+007 *	3.188e+007	8.511e+005		

PROPERTIES

	Overall	Vapour Phase	Liquid Phase		
Molecular Weight	22.79	21.69	32.79		
Molar Density (lbmole/ft3)	0.3535	0.3353	0.6972		
Mass Density (lb/ft3)	8.058	7.274	22.86		
Act. Volume Flow (barrel/day)	2.655e+005	2.522e+005	1.336e+004		
Mass Enthalpy (Btu/lb)	-1609	-1648	-1373		
Mass Entropy (Btu/lb-F)	1.469	1.570	0.8583		
Heat Capacity (Btu/lbmole-F)	19.52	18.82	25.92		
Mass Heat Capacity (Btu/lb-F)	0.8565	0.8674	0.7907		
LHV Molar Basis (Std) (Btu/SCF)	---	---	---		
LHV Mass Basis (Std) (Btu/lb)	---	---	---		
Phase Fraction [Vol. Basis]	0.8813	0.8813	0.1187		
Phase Fraction [Mass Basis]	0.8573	0.8573	0.1427		
Partial Pressure of CO2 (psig)	-13.38	---	---		
Cost Based on Flow (Cost/s)	0.0000	0.0000	0.0000		
Act. Gas Flow (ACFM)	983.2	983.2	---		
Avg. Liq. Density (lbmole/ft3)	0.9892	1.011	0.8267		
Specific Heat (Btu/lbmole-F)	19.52	18.82	25.92		
Std. Gas Flow (MMSCFD)	199.6	179.8	19.81		
Std. Ideal Liq. Mass Density (lb/ft3)	22.55	21.93	27.10		
Act. Liq. Flow (barrel/day)	1.336e+004	---	1.336e+004		
Z Factor	---	0.6350	0.3054		
Watson K	17.59	17.87	15.93		
User Property	---	---	---		
Cp/(Cp - R)	1.113	1.118	1.083		
Cp/Cv	2.058	2.193	1.083		
Heat of Vap. (Btu/lbmole)	3032	---	---		
Kinematic Viscosity (cSt)	---	0.1319	0.1654		
Liq. Mass Density (Std. Cond) (lb/ft3)	6.047e-002	5.753e-002	0.3589		
Liq. Vol. Flow (Std. Cond) (barrel/day)	3.538e+007	3.188e+007	8.511e+005		
Liquid Fraction	9.924e-002	0.0000	1.000		
Molar Volume (ft3/lbmole)	2.829	2.982	1.434		
Mass Heat of Vap. (Btu/lb)	133.0	---	---		
Phase Fraction [Molar Basis]	0.9008	0.9008	0.0992		
Surface Tension (dyne/cm)	4.646	---	4.646		
Thermal Conductivity (Btu/hr-ft-F)	---	2.373e-002	4.825e-002		
Viscosity (cP)	---	1.536e-002	6.055e-002		
Cv (Semi-Ideal) (Btu/lbmole-F)	17.54	16.83	23.94		
Mass Cv (Semi-Ideal) (Btu/lb-F)	0.7694	0.7759	0.7302		

Licensed to: EXXONMOBIL TECHNICAL COM

* Specified by user.

Material Stream: Gas int (continued)

Fluid Package: Peng Robinson
Property Package: Peng-Robinson

PROPERTIES

		Overall	Vapour Phase	Liquid Phase		
Cv	(Btu/lbmole-F)	9.486	8.579	23.94		
Mass Cv	(Btu/lb-F)	0.4162	0.3955	0.7302		
Cv (Ent. Method)	(Btu/lbmole-F)	16.67	8.579	---		
Mass Cv (Ent. Method)	(Btu/lb-F)	0.7312	0.3955	---		
Cp/Cv (Ent. Method)		1.171	2.193	---		
Liq. Vol. Flow - Sum(Std. Cond)	(barrel/day)	3.274e+007	3.188e+007	8.511e+005		
Partial Pressure of H2S	(psig)	-14.70	---	---		
Reid VP at 37.8 C	(psig)	---	---	793.5		
True VP at 37.8 C	(psig)	---	---	1342		
Viscosity Index		---	---	---		
HHV Molar Basis (Std)	(Btu/SCF)	---	---	---		
HHV Mass Basis (Std)	(Btu/lb)	---	---	---		
CO2 Loading		---	---	---		
CO2 Apparent Mole Conc.	(lbmole/ft3)	---	---	7.020e-004		
CO2 Apparent Wt. Conc.	(lbmol/lb)	---	---	3.071e-005		
Phase Fraction [Act. Vol. Basis]		0.9497	0.9497	5.032e-002		
Mass Exergy	(Btu/lb)	189.1	---	---		
Ideal Gas Cp/Cv		1.236	1.246	1.170		
Ideal Gas Cp	(Btu/lbmole-F)	10.42	10.06	13.65		
Mass Ideal Gas Cp	(Btu/lb-F)	0.4570	0.4638	0.4163		
Bubble Point Pressure	(psig)	---	---	---		

COMPOSITION

Overall Phase

Vapour Fraction 0.9008

COMPONENTS	MOLAR FLOW (lbmole/hr)	MOLE FRACTION	MASS FLOW (lb/hr)	MASS FRACTION	LIQUID VOLUME FLOW (barrel/day)	LIQUID VOLUME FRACTION
Oxygen	0.0000	0.0000	0.0000	0.0000	0.0000	0.0000
H2S	0.0000	0.0000	0.0000	0.0000	0.0000	0.0000
Nitrogen	325.0274	0.0148	9105.0887	0.0182	773.1458	0.0081
CO2	24.5967	0.0011	1082.5034	0.0022	89.8075	0.0009
Methane	15419.3477	0.7021	247373.6351	0.4942	56574.9325	0.5961
Ethane	3364.6347	0.1532	101175.2871	0.2021	19477.1345	0.2052
Propane	1873.3000	0.0853	82607.7728	0.1650	11163.5572	0.1176
i-Butane	216.0993	0.0098	12560.6881	0.0251	1530.4429	0.0161
n-Butane	520.4831	0.0237	30252.8769	0.0604	3551.7776	0.0374
22-Mpropane	2.3499	0.0001	169.5466	0.0003	19.4919	0.0002
i-Pentane	82.7942	0.0038	5973.7432	0.0119	656.0912	0.0069
n-Pentane	83.0138	0.0038	5989.5886	0.0120	651.2640	0.0069
22-Mbutane	0.3997	0.0000	34.4453	0.0001	3.6143	0.0000
Cyclopentane	0.0000	0.0000	0.0000	0.0000	0.0000	0.0000
23-Mbutane	2.5914	0.0001	223.3268	0.0004	22.9892	0.0002
2-Mpentane	9.3336	0.0004	804.3548	0.0016	83.8923	0.0009
3-Mpentane	4.6119	0.0002	397.4459	0.0008	40.7587	0.0004
n-Hexane	10.0144	0.0005	863.0254	0.0017	89.1752	0.0009
Hexanes*	0.0000	0.0000	0.0000	0.0000	0.0000	0.0000
Mcyclopentan	6.0174	0.0003	506.4411	0.0010	46.1092	0.0005
Benzene	1.2760	0.0001	99.6657	0.0002	7.7357	0.0001
Cyclohexane	6.1931	0.0003	521.2159	0.0010	45.6482	0.0005
2-Mhexane	0.8192	0.0000	82.0845	0.0002	8.2468	0.0001
3-Mhexane	0.7401	0.0000	74.1621	0.0001	7.3573	0.0001

Licensed to: EXXONMOBIL TECHNICAL COM
* Specified by user.

Material Stream: Gas int (continued)

Fluid Package: Peng Robinson
Property Package: Peng-Robinson

COMPOSITION

Overall Phase (continued)

Vapour Fraction 0.9008

COMPONENTS	MOLAR FLOW (lbmole/hr)	MOLE FRACTION	MASS FLOW (lb/hr)	MASS FRACTION	LIQUID VOLUME FLOW (barrel/day)	LIQUID VOLUME FRACTION
224-Mpentane	0.0000	0.0000	0.0000	0.0000	0.0000	0.0000
n-Heptane	1.2408	0.0001	124.3371	0.0002	12.3958	0.0001
Heptanes*	1.4341	0.0001	137.6725	0.0003	12.9928	0.0001
Mcyclohexane	2.5475	0.0001	250.1403	0.0005	22.1738	0.0002
Toluene	0.3909	0.0000	36.0193	0.0001	2.8347	0.0000
n-Octane	0.0993	0.0000	11.3394	0.0000	1.1007	0.0000
Octanes*	0.6808	0.0000	72.8464	0.0001	6.6729	0.0001
E-Benzene	0.0067	0.0000	0.7111	0.0000	0.0560	0.0000
m-Xylene	0.0117	0.0000	1.2451	0.0000	0.0983	0.0000
o-Xylene	0.0122	0.0000	1.2940	0.0000	0.1003	0.0000
p-Xylene	0.0119	0.0000	1.2614	0.0000	0.0999	0.0000
Nonanes*	0.0591	0.0000	7.1483	0.0000	0.6386	0.0000
Decanes*	0.0050	0.0000	0.6710	0.0000	0.0589	0.0000
Undecanes_3*	0.0003	0.0000	0.0507	0.0000	0.0044	0.0000
Dodecanes_3*	0.0000	0.0000	0.0028	0.0000	0.0002	0.0000
Triadecanes_3*	0.0000	0.0000	0.0001	0.0000	0.0000	0.0000
Tetradecanes_3*	0.0000	0.0000	0.0000	0.0000	0.0000	0.0000
Pentadecanes_3*	0.0000	0.0000	0.0000	0.0000	0.0000	0.0000
Hexadecanes_3*	0.0000	0.0000	0.0000	0.0000	0.0000	0.0000
Heptadecanes_3*	0.0000	0.0000	0.0000	0.0000	0.0000	0.0000
Octadecanes_3*	0.0000	0.0000	0.0000	0.0000	0.0000	0.0000
Nonadecanes_3*	0.0000	0.0000	0.0000	0.0000	0.0000	0.0000
eicosanes_3*	0.0000	0.0000	0.0000	0.0000	0.0000	0.0000
Heneicosanes_3*	0.0000	0.0000	0.0000	0.0000	0.0000	0.0000
Dodocosanes_3*	0.0000	0.0000	0.0000	0.0000	0.0000	0.0000
Triacosanes_3*	0.0000	0.0000	0.0000	0.0000	0.0000	0.0000
Tetracosanes_3*	0.0000	0.0000	0.0000	0.0000	0.0000	0.0000
Pentacosanes_3*	0.0000	0.0000	0.0000	0.0000	0.0000	0.0000
Hexacosanes_3*	0.0000	0.0000	0.0000	0.0000	0.0000	0.0000
Heptacosanes_3*	0.0000	0.0000	0.0000	0.0000	0.0000	0.0000
Octacosanes_3*	0.0000	0.0000	0.0000	0.0000	0.0000	0.0000
Nonacosanes_3*	0.0000	0.0000	0.0000	0.0000	0.0000	0.0000
Triacontanes*	0.0000	0.0000	0.0000	0.0000	0.0000	0.0000
C31+_2*	0.0000	0.0000	0.0000	0.0000	0.0000	0.0000
H2O	0.7950	0.0000	14.3221	0.0000	0.9826	0.0000
NC30*	0.0000	0.0000	0.0000	0.0000	0.0000	0.0000
n-Nonane	0.0000	0.0000	0.0000	0.0000	0.0000	0.0000
n-Decane	0.0000	0.0000	0.0000	0.0000	0.0000	0.0000
NC31-35*	0.0000	0.0000	0.0000	0.0000	0.0000	0.0000
TexaTherm	0.0000	0.0000	0.0000	0.0000	0.0000	0.0000
NC31-35_1*	0.0000	0.0000	0.0000	0.0000	0.0000	0.0000
CO	0.0000	0.0000	0.0000	0.0000	0.0000	0.0000
TEGlycol	0.0000	0.0000	0.0000	0.0000	0.0000	0.0000
SO2	0.0000	0.0000	0.0000	0.0000	0.0000	0.0000
C10+ (SS1H)*	0.0000	0.0000	0.0000	0.0000	0.0000	0.0000
464H C7+*	0.0000	0.0000	0.0000	0.0000	0.0000	0.0000
474Y c7+*	0.0000	0.0000	0.0000	0.0000	0.0000	0.0000
Total	21960.9387	1.0000	500555.9597	1.0000	94903.3818	1.0000

Licensed to: EXXONMOBIL TECHNICAL COM
* Specified by user.

Material Stream: Gas int (continued)

Fluid Package: Peng Robinson
Property Package: Peng-Robinson

COMPOSITION

Vapour Phase

Phase Fraction 0.9008

COMPONENTS	MOLAR FLOW (lbmole/hr)	MOLE FRACTION	MASS FLOW (lb/hr)	MASS FRACTION	LIQUID VOLUME FLOW (barrel/day)	LIQUID VOLUME FRACTION
Oxygen	0.0000	0.0000	0.0000	0.0000	0.0000	0.0000
H2S	0.0000	0.0000	0.0000	0.0000	0.0000	0.0000
Nitrogen	314.3313	0.0159	8805.4534	0.0205	747.7027	0.0089
CO2	22.4022	0.0011	985.9228	0.0023	81.7949	0.0010
Methane	14509.8332	0.7335	232782.2333	0.5425	53237.8445	0.6366
Ethane	2913.3313	0.1473	87604.4961	0.2042	16864.6376	0.2016
Propane	1441.6125	0.0729	63571.4481	0.1481	8591.0015	0.1027
i-Butane	146.5501	0.0074	8518.1675	0.0199	1037.8865	0.0124
n-Butane	331.0336	0.0167	19241.1983	0.0448	2258.9738	0.0270
22-Mpropane	1.4212	0.0001	102.5452	0.0002	11.7891	0.0001
i-Pentane	43.5355	0.0022	3141.1591	0.0073	344.9909	0.0041
n-Pentane	40.4254	0.0020	2916.7608	0.0068	317.1472	0.0038
22-Mbutane	0.1679	0.0000	14.4722	0.0000	1.5185	0.0000
Cyclopentane	0.0000	0.0000	0.0000	0.0000	0.0000	0.0000
23-Mbutane	1.0318	0.0001	88.9179	0.0002	9.1532	0.0001
2-Mpentane	3.6008	0.0002	310.3084	0.0007	32.3644	0.0004
3-Mpentane	1.7123	0.0001	147.5608	0.0003	15.1326	0.0002
n-Hexane	3.4653	0.0002	298.6358	0.0007	30.8576	0.0004
Hexanes*	0.0000	0.0000	0.0000	0.0000	0.0000	0.0000
Mcyclopentan	2.0242	0.0001	170.3645	0.0004	15.5109	0.0002
Benzene	0.4372	0.0000	34.1498	0.0001	2.6506	0.0000
Cyclohexane	2.0066	0.0001	168.8769	0.0004	14.7903	0.0002
2-Mhexane	0.2135	0.0000	21.3970	0.0000	2.1497	0.0000
3-Mhexane	0.1892	0.0000	18.9572	0.0000	1.8807	0.0000
224-Mpentane	0.0000	0.0000	0.0000	0.0000	0.0000	0.0000
n-Heptane	0.2885	0.0000	28.9140	0.0001	2.8826	0.0000
Heptanes*	0.3552	0.0000	34.1025	0.0001	3.2184	0.0000
Mcyclohexane	0.6159	0.0000	60.4743	0.0001	5.3608	0.0001
Toluene	0.0897	0.0000	8.2692	0.0000	0.6508	0.0000
n-Octane	0.0148	0.0000	1.6872	0.0000	0.1638	0.0000
Octanes*	0.1194	0.0000	12.7746	0.0000	1.1702	0.0000
E-Benzene	0.0009	0.0000	0.0948	0.0000	0.0075	0.0000
m-Xylene	0.0016	0.0000	0.1682	0.0000	0.0133	0.0000
o-Xylene	0.0016	0.0000	0.1706	0.0000	0.0132	0.0000
p-Xylene	0.0016	0.0000	0.1718	0.0000	0.0136	0.0000
Nonanes*	0.0066	0.0000	0.7930	0.0000	0.0708	0.0000
Decanes*	0.0004	0.0000	0.0483	0.0000	0.0042	0.0000
Undecanes_3*	0.0000	0.0000	0.0024	0.0000	0.0002	0.0000
Dodecanes_3*	0.0000	0.0000	0.0001	0.0000	0.0000	0.0000
Triadecanes_3*	0.0000	0.0000	0.0000	0.0000	0.0000	0.0000
Tetradecanes_3*	0.0000	0.0000	0.0000	0.0000	0.0000	0.0000
Pentadecanes_3*	0.0000	0.0000	0.0000	0.0000	0.0000	0.0000
Hexadecanes_3*	0.0000	0.0000	0.0000	0.0000	0.0000	0.0000
Heptadecanes_3*	0.0000	0.0000	0.0000	0.0000	0.0000	0.0000
Octadecanes_3*	0.0000	0.0000	0.0000	0.0000	0.0000	0.0000
Nonadecanes_3*	0.0000	0.0000	0.0000	0.0000	0.0000	0.0000
eicosanes_3*	0.0000	0.0000	0.0000	0.0000	0.0000	0.0000
Heneicosanes_3*	0.0000	0.0000	0.0000	0.0000	0.0000	0.0000

Licensed to: EXXONMOBIL TECHNICAL COM
* Specified by user.

Material Stream: Gas int (continued)

Fluid Package: Peng Robinson
Property Package: Peng-Robinson

COMPOSITION

Vapour Phase (continued)

Phase Fraction 0.9008

COMPONENTS	MOLAR FLOW (lbmole/hr)	MOLE FRACTION	MASS FLOW (lb/hr)	MASS FRACTION	LIQUID VOLUME FLOW (barrel/day)	LIQUID VOLUME FRACTION
Dodocosanes_3*	0.0000	0.0000	0.0000	0.0000	0.0000	0.0000
Triacosanes_3*	0.0000	0.0000	0.0000	0.0000	0.0000	0.0000
Tetracosanes_3*	0.0000	0.0000	0.0000	0.0000	0.0000	0.0000
Pentacosanes_3*	0.0000	0.0000	0.0000	0.0000	0.0000	0.0000
Hexacosanes_3*	0.0000	0.0000	0.0000	0.0000	0.0000	0.0000
Heptacosanes_3*	0.0000	0.0000	0.0000	0.0000	0.0000	0.0000
Octacosanes_3*	0.0000	0.0000	0.0000	0.0000	0.0000	0.0000
Nonacosanes_3*	0.0000	0.0000	0.0000	0.0000	0.0000	0.0000
Triacontanes*	0.0000	0.0000	0.0000	0.0000	0.0000	0.0000
C31+_2*	0.0000	0.0000	0.0000	0.0000	0.0000	0.0000
H2O	0.7209	0.0000	12.9871	0.0000	0.8911	0.0000
NC30*	0.0000	0.0000	0.0000	0.0000	0.0000	0.0000
n-Nonane	0.0000	0.0000	0.0000	0.0000	0.0000	0.0000
n-Decane	0.0000	0.0000	0.0000	0.0000	0.0000	0.0000
NC31-35*	0.0000	0.0000	0.0000	0.0000	0.0000	0.0000
TexaTherm	0.0000	0.0000	0.0000	0.0000	0.0000	0.0000
NC31-35_1*	0.0000	0.0000	0.0000	0.0000	0.0000	0.0000
CO	0.0000	0.0000	0.0000	0.0000	0.0000	0.0000
TEGlycol	0.0000	0.0000	0.0000	0.0000	0.0000	0.0000
SO2	0.0000	0.0000	0.0000	0.0000	0.0000	0.0000
C10+ (SS1H)*	0.0000	0.0000	0.0000	0.0000	0.0000	0.0000
464H C7+*	0.0000	0.0000	0.0000	0.0000	0.0000	0.0000
474Y c7+*	0.0000	0.0000	0.0000	0.0000	0.0000	0.0000
Total	19781.5420	1.0000	429103.6833	1.0000	83634.2377	1.0000

Liquid Phase

Phase Fraction 9.924e-002

COMPONENTS	MOLAR FLOW (lbmole/hr)	MOLE FRACTION	MASS FLOW (lb/hr)	MASS FRACTION	LIQUID VOLUME FLOW (barrel/day)	LIQUID VOLUME FRACTION
Oxygen	0.0000	0.0000	0.0000	0.0000	0.0000	0.0000
H2S	0.0000	0.0000	0.0000	0.0000	0.0000	0.0000
Nitrogen	10.6962	0.0049	299.6353	0.0042	25.4431	0.0023
CO2	2.1945	0.0010	96.5806	0.0014	8.0126	0.0007
Methane	909.5145	0.4173	14591.4018	0.2042	3337.0879	0.2961
Ethane	451.3034	0.2071	13570.7910	0.1899	2612.4969	0.2318
Propane	431.6876	0.1981	19036.3247	0.2664	2572.5557	0.2283
i-Butane	69.5492	0.0319	4042.5206	0.0566	492.5564	0.0437
n-Butane	189.4495	0.0869	11011.6786	0.1541	1292.8038	0.1147
22-Mpropane	0.9286	0.0004	67.0013	0.0009	7.7028	0.0007
i-Pentane	39.2587	0.0180	2832.5841	0.0396	311.1003	0.0276
n-Pentane	42.5884	0.0195	3072.8278	0.0430	334.1168	0.0296
22-Mbutane	0.2318	0.0001	19.9731	0.0003	2.0957	0.0002
Cyclopentane	0.0000	0.0000	0.0000	0.0000	0.0000	0.0000
23-Mbutane	1.5597	0.0007	134.4089	0.0019	13.8360	0.0012
2-Mpentane	5.7328	0.0026	494.0464	0.0069	51.5279	0.0046
3-Mpentane	2.8996	0.0013	249.8851	0.0035	25.6261	0.0023
n-Hexane	6.5491	0.0030	564.3896	0.0079	58.3176	0.0052
Hexanes*	0.0000	0.0000	0.0000	0.0000	0.0000	0.0000
Mcyclopentan	3.9932	0.0018	336.0766	0.0047	30.5983	0.0027

* Specified by user.

Material Stream: Gas int (continued)

Fluid Package: Peng Robinson
Property Package: Peng-Robinson

COMPOSITION

Liquid Phase (continued)

Phase Fraction 9.924e-002

COMPONENTS	MOLAR FLOW (lbmole/hr)	MOLE FRACTION	MASS FLOW (lb/hr)	MASS FRACTION	LIQUID VOLUME FLOW (barrel/day)	LIQUID VOLUME FRACTION
Benzene	0.8388	0.0004	65.5159	0.0009	5.0851	0.0005
Cyclohexane	4.1865	0.0019	352.3391	0.0049	30.8579	0.0027
2-Mhexane	0.6056	0.0003	60.6875	0.0008	6.0971	0.0005
3-Mhexane	0.5509	0.0003	55.2049	0.0008	5.4767	0.0005
224-Mpentane	0.0000	0.0000	0.0000	0.0000	0.0000	0.0000
n-Heptane	0.9523	0.0004	95.4231	0.0013	9.5132	0.0008
Heptanes*	1.0788	0.0005	103.5700	0.0014	9.7744	0.0009
Mcyclohexane	1.9316	0.0009	189.6660	0.0027	16.8130	0.0015
Toluene	0.3012	0.0001	27.7501	0.0004	2.1839	0.0002
n-Octane	0.0845	0.0000	9.6521	0.0001	0.9369	0.0001
Octanes*	0.5614	0.0003	60.0718	0.0008	5.5027	0.0005
E-Benzene	0.0058	0.0000	0.6164	0.0000	0.0485	0.0000
m-Xylene	0.0101	0.0000	1.0768	0.0000	0.0851	0.0000
o-Xylene	0.0106	0.0000	1.1234	0.0000	0.0871	0.0000
p-Xylene	0.0103	0.0000	1.0895	0.0000	0.0863	0.0000
Nonanes*	0.0525	0.0000	6.3553	0.0001	0.5678	0.0001
Decanes*	0.0046	0.0000	0.6227	0.0000	0.0546	0.0000
Undecanes_3*	0.0003	0.0000	0.0483	0.0000	0.0042	0.0000
Dodecanes_3*	0.0000	0.0000	0.0027	0.0000	0.0002	0.0000
Triadecanes_3*	0.0000	0.0000	0.0001	0.0000	0.0000	0.0000
Tetradecanes_3*	0.0000	0.0000	0.0000	0.0000	0.0000	0.0000
Pentadecanes_3*	0.0000	0.0000	0.0000	0.0000	0.0000	0.0000
Hexadecanes_3*	0.0000	0.0000	0.0000	0.0000	0.0000	0.0000
Heptadecanes_3*	0.0000	0.0000	0.0000	0.0000	0.0000	0.0000
Octadecanes_3*	0.0000	0.0000	0.0000	0.0000	0.0000	0.0000
Nonadecanes_3*	0.0000	0.0000	0.0000	0.0000	0.0000	0.0000
eicosanes_3*	0.0000	0.0000	0.0000	0.0000	0.0000	0.0000
Heneicosanes_3*	0.0000	0.0000	0.0000	0.0000	0.0000	0.0000
Dodocosanes_3*	0.0000	0.0000	0.0000	0.0000	0.0000	0.0000
Triacosanes_3*	0.0000	0.0000	0.0000	0.0000	0.0000	0.0000
Tetracosanes_3*	0.0000	0.0000	0.0000	0.0000	0.0000	0.0000
Pentacosanes_3*	0.0000	0.0000	0.0000	0.0000	0.0000	0.0000
Hexacosanes_3*	0.0000	0.0000	0.0000	0.0000	0.0000	0.0000
Heptacosanes_3*	0.0000	0.0000	0.0000	0.0000	0.0000	0.0000
Octacosanes_3*	0.0000	0.0000	0.0000	0.0000	0.0000	0.0000
Nonacosanes_3*	0.0000	0.0000	0.0000	0.0000	0.0000	0.0000
Triacontanes*	0.0000	0.0000	0.0000	0.0000	0.0000	0.0000
C31+_2*	0.0000	0.0000	0.0000	0.0000	0.0000	0.0000
H2O	0.0741	0.0000	1.3350	0.0000	0.0916	0.0000
NC30*	0.0000	0.0000	0.0000	0.0000	0.0000	0.0000
n-Nonane	0.0000	0.0000	0.0000	0.0000	0.0000	0.0000
n-Decane	0.0000	0.0000	0.0000	0.0000	0.0000	0.0000
NC31-35*	0.0000	0.0000	0.0000	0.0000	0.0000	0.0000
TexaTherm	0.0000	0.0000	0.0000	0.0000	0.0000	0.0000
NC31-35_1*	0.0000	0.0000	0.0000	0.0000	0.0000	0.0000
CO	0.0000	0.0000	0.0000	0.0000	0.0000	0.0000
TEGlycol	0.0000	0.0000	0.0000	0.0000	0.0000	0.0000
SO2	0.0000	0.0000	0.0000	0.0000	0.0000	0.0000

Licensed to: EXXONMOBIL TECHNICAL COM
* Specified by user.

Material Stream: Gas int (continued)

Fluid Package: Peng Robinson
Property Package: Peng-Robinson

COMPOSITION

Liquid Phase (continued)

Phase Fraction 9.924e-002

COMPONENTS	MOLAR FLOW (lbmole/hr)	MOLE FRACTION	MASS FLOW (lb/hr)	MASS FRACTION	LIQUID VOLUME FLOW (barrel/day)	LIQUID VOLUME FRACTION
C10+ (SS1H)*	0.0000	0.0000	0.0000	0.0000	0.0000	0.0000
464H C7+*	0.0000	0.0000	0.0000	0.0000	0.0000	0.0000
474Y c7+*	0.0000	0.0000	0.0000	0.0000	0.0000	0.0000
Total	2179.3967	1.0000	71452.2765	1.0000	11269.1442	1.0000

Licensed to: EXXONMOBIL TECHNICAL COM
* Specified by user.

XTO ENERGY INC.
Cowboy CDP
PROCESS SIMULATION COMPONENTS

PROCESS SIMULATION COMPONENTS - INLET GAS

HYSYS PROCESS STREAM NAME:	Gas Inlet
HYSYS COMPONENTS	
Component	**Mole Frac**
Oxygen	0.000
H2S	0.000
Nitrogen	0.016
CO2	0.001
Methane	0.735
Ethane	0.147
Propane	0.072
i-Butane	0.007
n-Butane	0.016
22-Mpropane	0.000
i-Pentane	0.002
n-Pentane	0.002
22-Mbutane	0.000
Cyclopentane	0.000
23-Mbutane	0.000
2-Mpentane	0.000
3-Mpentane	0.000
n-Hexane	0.000
Hexanes*	0.000
Mcyclopentan	0.000
Benzene	0.000
Cyclohexane	0.000
2-Mhexane	0.000
3-Mhexane	0.000
224-Mpentane	0.000
n-Heptane	0.000
Heptanes*	0.000
Mcyclohexane	0.000
Toluene	0.000
n-Octane	0.000
Octanes*	0.000
E-Benzene	0.000
m-Xylene	0.000
o-Xylene	0.000
p-Xylene	0.000
Nonanes*	0.000
Decanes*	0.000
Undecanes_3*	0.000
Dodecanes_3*	0.000
Triadecanes_3*	0.000
Tetradecanes_3*	0.000
Pentadecanes_3*	0.000
Hexadecanes_3*	0.000
Heptadecanes_3*	0.000
Octadecanes_3*	0.000
Nonadecanes_3*	0.000
eicosanes_3*	0.000
Heneicosanes_3*	0.000
Dodocosanes_3*	0.000
Triacosanes_3*	0.000
Tetracosanes_3*	0.000
Pentacosanes_3*	0.000
Hexacosanes_3*	0.000
Heptacosanes_3*	0.000
Octacosanes_3*	0.000
Nonacosanes_3*	0.000
Triacontanes*	0.000
C31+_2*	0.000
H2O	0.000
NC30*	0.000
n-Nonane	0.000
n-Decane	0.000
NC31-35*	0.000
TexaTherm	0.000
NC31-35_1*	0.000
CO	0.000
TOTALS	1.000

PROMAX PROCESS STREAM NAME:	Inlet Gas	
PROMAX COMPONENTS		
Component	**Mole Frac**	**WT%**
Water	0.00015	0.01
Hydrogen Sulfide	0.00000	0.00
Nitrogen	0.01592	1.04
Carbon Dioxide	0.00113	0.23
Methane	0.73517	55.11
Ethane	0.14720	20.68
Propane	0.07216	14.87
Iso-butane	0.00724	1.97
N-butane	0.01623	4.41
Iso-pentane	0.00208	0.70
N-pentane	0.00192	0.65
Cyclopentanes	0.00000	0.00
Other Hexanes	0.00037	0.15
n-Hexane	0.00016	0.06
Methylcyclopentane	0.00009	0.04
Benzene	0.00002	0.01
Cyclohexane	0.00009	0.04
2,2,4 Trimethylpentane	0.00000	0.00
Other Heptanes	0.00003	0.01
Methylcyclohexane	0.00003	0.01
n-Heptane	0.00001	0.00
Toluene	0.00000	0.00
Octanes	0.00001	0.01
Ethylbenzene	0.00000	0.00
M&P-Xylene	0.00000	0.00
Nonanes	0.00000	0.00
Decanes	0.00000	0.00
Undecanes	0.00000	0.00
Total	1.000	100.000

Characteristics of Undecanes Plus	
Specific Gravity	0.8661
Molecular Weight (lb/lbmol)	262.912
VOC WT%	22.92
HAP WT%	0.072

EXXONMOBIL TECHNICAL COM Bedford, MA USA	Case Name:	Cowboy CDP CSH V6.4 winter-conservative.hsc
	Unit Set:	CSH 5b1
	Date/Time:	Tue Mar 10 09:19:39 2020

Material Stream: Gas Inlet

Fluid Package: Peng Robinson

Property Package: Peng-Robinson

CONDITIONS

	Overall	Vapour Phase	Liquid Phase		
Vapour / Phase Fraction	1.0000	1.0000	0.0000		
Temperature: (F)	50.00	50.00	50.00		
Pressure: (psig)	1100 *	1100	1100		
Molar Flow (MMSCFD)	180.4	180.4	0.0000		
Mass Flow (lb/hr)	4.283e+005	4.283e+005	0.0000		
Std Ideal Liq Vol Flow (barrel/day)	8.364e+004	8.364e+004	0.0000		
Molar Enthalpy (Btu/lbmole)	-3.564e+004	-3.564e+004	-4.558e+004		
Molar Entropy (Btu/lbmole-F)	34.27	34.27	27.85		
Heat Flow (Btu/hr)	-7.061e+008	-7.061e+008	0.0000		
Liq Vol Flow @Std Cond (barrel/day)	3.193e+007 *	3.193e+007	0.0000		

PROPERTIES

	Overall	Vapour Phase	Liquid Phase		
Molecular Weight	21.62	21.62	33.55		
Molar Density (lbmole/ft3)	0.3133	0.3133	0.7119		
Mass Density (lb/ft3)	6.774	6.774	23.89		
Act. Volume Flow (barrel/day)	2.703e+005	2.703e+005	0.0000		
Mass Enthalpy (Btu/lb)	-1648	-1648	-1358		
Mass Entropy (Btu/lb-F)	1.585	1.585	0.8301		
Heat Capacity (Btu/lbmole-F)	18.04	18.04	25.91		
Mass Heat Capacity (Btu/lb-F)	0.8343	0.8343	0.7722		
LHV Molar Basis (Std) (Btu/SCF)	---	---	---		
LHV Mass Basis (Std) (Btu/lb)	---	---	---		
Phase Fraction [Vol. Basis]	1.000	1.000	---		
Phase Fraction [Mass Basis]	1.000	1.000	0.0000		
Partial Pressure of CO2 (psig)	-13.43	---	---		
Cost Based on Flow (Cost/s)	0.0000	0.0000	0.0000		
Act. Gas Flow (ACFM)	1054	1054	---		
Avg. Liq. Density (lbmole/ft3)	1.012	1.012	0.8170		
Specific Heat (Btu/lbmole-F)	18.04	18.04	25.91		
Std. Gas Flow (MMSCFD)	180.1	180.1	0.0000		
Std. Ideal Liq. Mass Density (lb/ft3)	21.89	21.89	27.41		
Act. Liq. Flow (barrel/day)	---	---	---		
Z Factor	---	0.6506	0.2863		
Watson K	17.89	17.89	15.83		
User Property	---	---	---		
Cp/(Cp - R)	1.124	1.124	1.083		
Cp/Cv	2.116	2.116	1.083		
Heat of Vap. (Btu/lbmole)	2615	---	---		
Kinematic Viscosity (cSt)	0.1372	0.1372	0.1694		
Liq. Mass Density (Std. Cond) (lb/ft3)	5.734e-002	5.734e-002	22.83		
Liq. Vol. Flow (Std. Cond) (barrel/day)	3.193e+007	3.193e+007	0.0000		
Liquid Fraction	0.0000	0.0000	1.000		
Molar Volume (ft3/lbmole)	3.192	3.192	1.405		
Mass Heat of Vap. (Btu/lb)	120.9	---	---		
Phase Fraction [Molar Basis]	1.0000	1.0000	0.0000		
Surface Tension (dyne/cm)	---	---	4.888		
Thermal Conductivity (Btu/hr-ft-F)	2.300e-002	2.300e-002	4.862e-002		
Viscosity (cP)	1.489e-002	1.489e-002	6.480e-002		
Cv (Semi-Ideal) (Btu/lbmole-F)	16.05	16.05	23.93		
Mass Cv (Semi-Ideal) (Btu/lb-F)	0.7424	0.7424	0.7130		

Licensed to: EXXONMOBIL TECHNICAL COM

* Specified by user.

Material Stream: Gas Inlet (continued)

Fluid Package: Peng Robinson
Property Package: Peng-Robinson

PROPERTIES

	Overall	Vapour Phase	Liquid Phase		
Cv (Btu/lbmole-F)	8.525	8.525	23.93		
Mass Cv (Btu/lb-F)	0.3943	0.3943	0.7130		
Cv (Ent. Method) (Btu/lbmole-F)	8.526	8.526	---		
Mass Cv (Ent. Method) (Btu/lb-F)	0.3943	0.3943	---		
Cp/Cv (Ent. Method)	2.116	2.116	---		
Liq. Vol. Flow - Sum(Std. Cond) (barrel/day)	3.193e+007	3.193e+007	0.0000		
Partial Pressure of H2S (psig)	-14.70	---	---		
Reid VP at 37.8 C (psig)	---	---	745.1		
True VP at 37.8 C (psig)	---	---	1296		
Viscosity Index	---	---	---		
HHV Molar Basis (Std) (Btu/SCF)	---	---	---		
HHV Mass Basis (Std) (Btu/lb)	---	---	---		
CO2 Loading	---	---	---		
CO2 Apparent Mole Conc. (lbmole/ft3)	---	---	---		
CO2 Apparent Wt. Conc. (lbmol/lb)	---	---	---		
Phase Fraction [Act. Vol. Basis]	1.000	1.000	0.0000		
Mass Exergy (Btu/lb)	199.5	---	---		
Ideal Gas Cp/Cv	1.247	1.247	1.167		
Ideal Gas Cp (Btu/lbmole-F)	10.04	10.04	13.90		
Mass Ideal Gas Cp (Btu/lb-F)	0.4643	0.4643	0.4142		
Bubble Point Pressure (psig)	---	---	---		
CO2E-AR4[Gas] (lb/hr)	5.842e+006	5.842e+006	0.0000		
CO2E-SAR[Gas] (lb/hr)	4.907e+006	4.907e+006	0.0000		
CO2E-US[Gas] (lb/hr)	4.907e+006	4.907e+006	0.0000		
HC Dew Point[Gas] (F)	50.01	50.01	190.9		
HHV Mass Basis[Gas] (Btu/lb)	2.248e+004	2.248e+004	2.192e+004		
HHV Molar Basis[Gas] (Btu/lbmole)	4.861e+005	4.861e+005	7.355e+005		
HHV Vol. Basis[Gas] (MMBtu/gal)	1.722e-004	1.722e-004	2.624e-004		
LHV Mass Basis[Gas] (Btu/lb)	2.041e+004	2.041e+004	2.008e+004		
LHV Molar Basis[Gas] (Btu/lbmole)	4.413e+005	4.413e+005	6.739e+005		
LHV Vol. Basis[Gas] (MMBtu/gal)	1.563e-004	1.563e-004	2.404e-004		
Mass Density (Std. Cond)[Gas] (lb/ft3)	5.731e-002	5.731e-002	8.953e-002		
Water Content[Gas] (lb/MMSCF)	7.032	7.032	6.435		
Water Dew Point[Gas] (F)	37.33	37.33	35.81		
Wobbe Index[Gas] (MMBtu/gal)	1.990e-004	1.990e-004	2.425e-004		

COMPOSITION

Overall Phase

Vapour Fraction 1.0000

COMPONENTS	MOLAR FLOW (lbmole/hr)	MOLE FRACTION	MASS FLOW (lb/hr)	MASS FRACTION	LIQUID VOLUME FLOW (barrel/day)	LIQUID VOLUME FRACTION
Oxygen	0.0000	0.0000	0.0000	0.0000	0.0000	0.0000
H2S	0.0000	0.0000	0.0000	0.0000	0.0000	0.0000
Nitrogen	315.3253	0.0159	8833.3007	0.0206	750.0673	0.0090
CO2	22.4726	0.0011	989.0232	0.0023	82.0521	0.0010
Methane	14562.7148	0.7352	233630.6163	0.5454	53431.8717	0.6389
Ethane	2915.7957	0.1472	87678.6010	0.2047	16878.9035	0.2018
Propane	1429.3947	0.0722	63032.6777	0.1472	8518.1924	0.1018
i-Butane	143.3569	0.0072	8332.5659	0.0195	1015.2721	0.0121
n-Butane	321.4514	0.0162	18684.2381	0.0436	2193.5850	0.0262
22-Mpropane	1.3711	0.0001	98.9286	0.0002	11.3733	0.0001

Licensed to: EXXONMOBIL TECHNICAL COM
* Specified by user.

Material Stream: Gas Inlet (continued)

Fluid Package: Peng Robinson
Property Package: Peng-Robinson

COMPOSITION

Overall Phase (continued)

Vapour Fraction 1.0000

COMPONENTS	MOLAR FLOW (lbmole/hr)	MOLE FRACTION	MASS FLOW (lb/hr)	MASS FRACTION	LIQUID VOLUME FLOW (barrel/day)	LIQUID VOLUME FRACTION
i-Pentane	41.2817	0.0021	2978.5436	0.0070	327.1309	0.0039
n-Pentane	37.9670	0.0019	2739.3848	0.0064	297.8606	0.0036
22-Mbutane	0.1549	0.0000	13.3488	0.0000	1.4007	0.0000
Cyclopentane	0.0000	0.0000	0.0000	0.0000	0.0000	0.0000
23-Mbutane	0.9444	0.0000	81.3907	0.0002	8.3783	0.0001
2-Mpentane	3.2825	0.0002	282.8856	0.0007	29.5043	0.0004
3-Mpentane	1.5539	0.0001	133.9124	0.0003	13.7329	0.0002
n-Hexane	3.1176	0.0002	268.6703	0.0006	27.7613	0.0003
Hexanes*	0.0000	0.0000	0.0000	0.0000	0.0000	0.0000
Mcyclopentan	1.8170	0.0001	152.9251	0.0004	13.9231	0.0002
Benzene	0.3936	0.0000	30.7423	0.0001	2.3861	0.0000
Cyclohexane	1.7924	0.0001	150.8526	0.0004	13.2117	0.0002
2-Mhexane	0.1857	0.0000	18.6047	0.0000	1.8692	0.0000
3-Mhexane	0.1642	0.0000	16.4506	0.0000	1.6320	0.0000
224-Mpentane	0.0000	0.0000	0.0000	0.0000	0.0000	0.0000
n-Heptane	0.2477	0.0000	24.8225	0.0001	2.4747	0.0000
Heptanes*	0.3073	0.0000	29.5023	0.0001	2.7843	0.0000
Mcyclohexane	0.5319	0.0000	52.2288	0.0001	4.6298	0.0001
Toluene	0.0770	0.0000	7.0990	0.0000	0.5587	0.0000
n-Octane	0.0121	0.0000	1.3813	0.0000	0.1341	0.0000
Octanes*	0.0995	0.0000	10.6444	0.0000	0.9751	0.0000
E-Benzene	0.0007	0.0000	0.0770	0.0000	0.0061	0.0000
m-Xylene	0.0013	0.0000	0.1368	0.0000	0.0108	0.0000
o-Xylene	0.0013	0.0000	0.1384	0.0000	0.0107	0.0000
p-Xylene	0.0013	0.0000	0.1397	0.0000	0.0111	0.0000
Nonanes*	0.0052	0.0000	0.6316	0.0000	0.0564	0.0000
Decanes*	0.0003	0.0000	0.0370	0.0000	0.0032	0.0000
Undecanes_3*	0.0000	0.0000	0.0018	0.0000	0.0002	0.0000
Dodecanes_3*	0.0000	0.0000	0.0001	0.0000	0.0000	0.0000
Triadecanes_3*	0.0000	0.0000	0.0000	0.0000	0.0000	0.0000
Tetradecanes_3*	0.0000	0.0000	0.0000	0.0000	0.0000	0.0000
Pentadecanes_3*	0.0000	0.0000	0.0000	0.0000	0.0000	0.0000
Hexadecanes_3*	0.0000	0.0000	0.0000	0.0000	0.0000	0.0000
Heptadecanes_3*	0.0000	0.0000	0.0000	0.0000	0.0000	0.0000
Octadecanes_3*	0.0000	0.0000	0.0000	0.0000	0.0000	0.0000
Nonadecanes_3*	0.0000	0.0000	0.0000	0.0000	0.0000	0.0000
eicosanes_3*	0.0000	0.0000	0.0000	0.0000	0.0000	0.0000
Heneicosanes_3*	0.0000	0.0000	0.0000	0.0000	0.0000	0.0000
Dodocosanes_3*	0.0000	0.0000	0.0000	0.0000	0.0000	0.0000
Triacosanes_3*	0.0000	0.0000	0.0000	0.0000	0.0000	0.0000
Tetracosanes_3*	0.0000	0.0000	0.0000	0.0000	0.0000	0.0000
Pentacosanes_3*	0.0000	0.0000	0.0000	0.0000	0.0000	0.0000
Hexacosanes_3*	0.0000	0.0000	0.0000	0.0000	0.0000	0.0000
Heptacosanes_3*	0.0000	0.0000	0.0000	0.0000	0.0000	0.0000
Octacosanes_3*	0.0000	0.0000	0.0000	0.0000	0.0000	0.0000
Nonacosanes_3*	0.0000	0.0000	0.0000	0.0000	0.0000	0.0000
Triacontanes*	0.0000	0.0000	0.0000	0.0000	0.0000	0.0000
C31+_2*	0.0000	0.0000	0.0000	0.0000	0.0000	0.0000

Licensed to: EXXONMOBIL TECHNICAL COM
* Specified by user.

Material Stream: Gas Inlet (continued)

Fluid Package: Peng Robinson
Property Package: Peng-Robinson

COMPOSITION

Overall Phase (continued)

Vapour Fraction 1.0000

COMPONENTS	MOLAR FLOW (lbmole/hr)	MOLE FRACTION	MASS FLOW (lb/hr)	MASS FRACTION	LIQUID VOLUME FLOW (barrel/day)	LIQUID VOLUME FRACTION
H2O	2.9397	0.0001	52.9599	0.0001	3.6336	0.0000
NC30*	0.0000	0.0000	0.0000	0.0000	0.0000	0.0000
n-Nonane	0.0000	0.0000	0.0000	0.0000	0.0000	0.0000
n-Decane	0.0000	0.0000	0.0000	0.0000	0.0000	0.0000
NC31-35*	0.0000	0.0000	0.0000	0.0000	0.0000	0.0000
TexaTherm	0.0000	0.0000	0.0000	0.0000	0.0000	0.0000
NC31-35_1*	0.0000	0.0000	0.0000	0.0000	0.0000	0.0000
CO	0.0000	0.0000	0.0000	0.0000	0.0000	0.0000
TEGlycol	0.0000	0.0000	0.0000	0.0000	0.0000	0.0000
SO2	0.0000	0.0000	0.0000	0.0000	0.0000	0.0000
C10+ (SS1H)*	0.0000	0.0000	0.0000	0.0000	0.0000	0.0000
464H C7+*	0.0000	0.0000	0.0000	0.0000	0.0000	0.0000
474Y c7+*	0.0000	0.0000	0.0000	0.0000	0.0000	0.0000
Total	19808.7630	1.0000	428327.4632	1.0000	83635.3974	1.0000

Vapour Phase

Phase Fraction 1.000

COMPONENTS	MOLAR FLOW (lbmole/hr)	MOLE FRACTION	MASS FLOW (lb/hr)	MASS FRACTION	LIQUID VOLUME FLOW (barrel/day)	LIQUID VOLUME FRACTION
Oxygen	0.0000	0.0000	0.0000	0.0000	0.0000	0.0000
H2S	0.0000	0.0000	0.0000	0.0000	0.0000	0.0000
Nitrogen	315.3253	0.0159	8833.3007	0.0206	750.0673	0.0090
CO2	22.4726	0.0011	989.0232	0.0023	82.0521	0.0010
Methane	14562.7148	0.7352	233630.6163	0.5454	53431.8717	0.6389
Ethane	2915.7957	0.1472	87678.6010	0.2047	16878.9035	0.2018
Propane	1429.3947	0.0722	63032.6777	0.1472	8518.1924	0.1018
i-Butane	143.3569	0.0072	8332.5659	0.0195	1015.2721	0.0121
n-Butane	321.4514	0.0162	18684.2381	0.0436	2193.5850	0.0262
22-Mpropane	1.3711	0.0001	98.9286	0.0002	11.3733	0.0001
i-Pentane	41.2817	0.0021	2978.5436	0.0070	327.1309	0.0039
n-Pentane	37.9670	0.0019	2739.3848	0.0064	297.8606	0.0036
22-Mbutane	0.1549	0.0000	13.3488	0.0000	1.4007	0.0000
Cyclopentane	0.0000	0.0000	0.0000	0.0000	0.0000	0.0000
23-Mbutane	0.9444	0.0000	81.3907	0.0002	8.3783	0.0001
2-Mpentane	3.2825	0.0002	282.8856	0.0007	29.5043	0.0004
3-Mpentane	1.5539	0.0001	133.9124	0.0003	13.7329	0.0002
n-Hexane	3.1176	0.0002	268.6703	0.0006	27.7613	0.0003
Hexanes*	0.0000	0.0000	0.0000	0.0000	0.0000	0.0000
Mcyclopentan	1.8170	0.0001	152.9251	0.0004	13.9231	0.0002
Benzene	0.3936	0.0000	30.7423	0.0001	2.3861	0.0000
Cyclohexane	1.7924	0.0001	150.8526	0.0004	13.2117	0.0002
2-Mhexane	0.1857	0.0000	18.6047	0.0000	1.8692	0.0000
3-Mhexane	0.1642	0.0000	16.4506	0.0000	1.6320	0.0000
224-Mpentane	0.0000	0.0000	0.0000	0.0000	0.0000	0.0000
n-Heptane	0.2477	0.0000	24.8225	0.0001	2.4747	0.0000
Heptanes*	0.3073	0.0000	29.5023	0.0001	2.7843	0.0000
Mcyclohexane	0.5319	0.0000	52.2288	0.0001	4.6298	0.0001
Toluene	0.0770	0.0000	7.0990	0.0000	0.5587	0.0000
n-Octane	0.0121	0.0000	1.3813	0.0000	0.1341	0.0000

Licensed to: EXXONMOBIL TECHNICAL COM
* Specified by user.

Material Stream: Gas Inlet (continued)

Fluid Package: Peng Robinson
Property Package: Peng-Robinson

COMPOSITION

Vapour Phase (continued)

Phase Fraction 1.000

COMPONENTS	MOLAR FLOW (lbmole/hr)	MOLE FRACTION	MASS FLOW (lb/hr)	MASS FRACTION	LIQUID VOLUME FLOW (barrel/day)	LIQUID VOLUME FRACTION
Octanes*	0.0995	0.0000	10.6444	0.0000	0.9751	0.0000
E-Benzene	0.0007	0.0000	0.0770	0.0000	0.0061	0.0000
m-Xylene	0.0013	0.0000	0.1368	0.0000	0.0108	0.0000
o-Xylene	0.0013	0.0000	0.1384	0.0000	0.0107	0.0000
p-Xylene	0.0013	0.0000	0.1397	0.0000	0.0111	0.0000
Nonanes*	0.0052	0.0000	0.6316	0.0000	0.0564	0.0000
Decanes*	0.0003	0.0000	0.0370	0.0000	0.0032	0.0000
Undecanes_3*	0.0000	0.0000	0.0018	0.0000	0.0002	0.0000
Dodecanes_3*	0.0000	0.0000	0.0001	0.0000	0.0000	0.0000
Triadecanes_3*	0.0000	0.0000	0.0000	0.0000	0.0000	0.0000
Tetradecanes_3*	0.0000	0.0000	0.0000	0.0000	0.0000	0.0000
Pentadecanes_3*	0.0000	0.0000	0.0000	0.0000	0.0000	0.0000
Hexadecanes_3*	0.0000	0.0000	0.0000	0.0000	0.0000	0.0000
Heptadecanes_3*	0.0000	0.0000	0.0000	0.0000	0.0000	0.0000
Octadecanes_3*	0.0000	0.0000	0.0000	0.0000	0.0000	0.0000
Nonadecanes_3*	0.0000	0.0000	0.0000	0.0000	0.0000	0.0000
eicosanes_3*	0.0000	0.0000	0.0000	0.0000	0.0000	0.0000
Heneicosanes_3*	0.0000	0.0000	0.0000	0.0000	0.0000	0.0000
Dodocosanes_3*	0.0000	0.0000	0.0000	0.0000	0.0000	0.0000
Triacosanes_3*	0.0000	0.0000	0.0000	0.0000	0.0000	0.0000
Tetracosanes_3*	0.0000	0.0000	0.0000	0.0000	0.0000	0.0000
Pentacosanes_3*	0.0000	0.0000	0.0000	0.0000	0.0000	0.0000
Hexacosanes_3*	0.0000	0.0000	0.0000	0.0000	0.0000	0.0000
Heptacosanes_3*	0.0000	0.0000	0.0000	0.0000	0.0000	0.0000
Octacosanes_3*	0.0000	0.0000	0.0000	0.0000	0.0000	0.0000
Nonacosanes_3*	0.0000	0.0000	0.0000	0.0000	0.0000	0.0000
Triacontanes*	0.0000	0.0000	0.0000	0.0000	0.0000	0.0000
C31+_2*	0.0000	0.0000	0.0000	0.0000	0.0000	0.0000
H2O	2.9397	0.0001	52.9599	0.0001	3.6336	0.0000
NC30*	0.0000	0.0000	0.0000	0.0000	0.0000	0.0000
n-Nonane	0.0000	0.0000	0.0000	0.0000	0.0000	0.0000
n-Decane	0.0000	0.0000	0.0000	0.0000	0.0000	0.0000
NC31-35*	0.0000	0.0000	0.0000	0.0000	0.0000	0.0000
TexaTherm	0.0000	0.0000	0.0000	0.0000	0.0000	0.0000
NC31-35_1*	0.0000	0.0000	0.0000	0.0000	0.0000	0.0000
CO	0.0000	0.0000	0.0000	0.0000	0.0000	0.0000
TEGlycol	0.0000	0.0000	0.0000	0.0000	0.0000	0.0000
SO2	0.0000	0.0000	0.0000	0.0000	0.0000	0.0000
C10+ (SS1H)*	0.0000	0.0000	0.0000	0.0000	0.0000	0.0000
464H C7+*	0.0000	0.0000	0.0000	0.0000	0.0000	0.0000
474Y c7+*	0.0000	0.0000	0.0000	0.0000	0.0000	0.0000
Total	19808.7630	1.0000	428327.4632	1.0000	83635.3974	1.0000

Liquid Phase

Phase Fraction 0.0000

COMPONENTS	MOLAR FLOW (lbmole/hr)	MOLE FRACTION	MASS FLOW (lb/hr)	MASS FRACTION	LIQUID VOLUME FLOW (barrel/day)	LIQUID VOLUME FRACTION
Oxygen	0.0000	0.0000	0.0000	0.0000	0.0000	0.0000
H2S	0.0000	0.0000	0.0000	0.0000	0.0000	0.0000

Licensed to: EXXONMOBIL TECHNICAL COM
* Specified by user.

Material Stream: Gas Inlet (continued)

Fluid Package: Peng Robinson
Property Package: Peng-Robinson

COMPOSITION

Liquid Phase (continued)

Phase Fraction 0.0000

COMPONENTS	MOLAR FLOW (lbmole/hr)	MOLE FRACTION	MASS FLOW (lb/hr)	MASS FRACTION	LIQUID VOLUME FLOW (barrel/day)	LIQUID VOLUME FRACTION
Nitrogen	0.0000	0.0045	0.0000	0.0037	0.0000	0.0020
CO2	0.0000	0.0010	0.0000	0.0013	0.0000	0.0007
Methane	0.0000	0.3972	0.0000	0.1899	0.0000	0.2786
Ethane	0.0000	0.2084	0.0000	0.1867	0.0000	0.2305
Propane	0.0000	0.2062	0.0000	0.2709	0.0000	0.2348
i-Butane	0.0000	0.0338	0.0000	0.0585	0.0000	0.0457
n-Butane	0.0000	0.0925	0.0000	0.1601	0.0000	0.1206
22-Mpropane	0.0000	0.0005	0.0000	0.0010	0.0000	0.0007
i-Pentane	0.0000	0.0193	0.0000	0.0415	0.0000	0.0292
n-Pentane	0.0000	0.0209	0.0000	0.0450	0.0000	0.0314
22-Mbutane	0.0000	0.0001	0.0000	0.0003	0.0000	0.0002
Cyclopentane	0.0000	0.0000	0.0000	0.0000	0.0000	0.0000
23-Mbutane	0.0000	0.0008	0.0000	0.0020	0.0000	0.0013
2-Mpentane	0.0000	0.0028	0.0000	0.0072	0.0000	0.0048
3-Mpentane	0.0000	0.0014	0.0000	0.0036	0.0000	0.0024
n-Hexane	0.0000	0.0032	0.0000	0.0082	0.0000	0.0055
Hexanes*	0.0000	0.0000	0.0000	0.0000	0.0000	0.0000
Mcyclopentan	0.0000	0.0020	0.0000	0.0049	0.0000	0.0029
Benzene	0.0000	0.0004	0.0000	0.0010	0.0000	0.0005
Cyclohexane	0.0000	0.0020	0.0000	0.0051	0.0000	0.0029
2-Mhexane	0.0000	0.0003	0.0000	0.0009	0.0000	0.0006
3-Mhexane	0.0000	0.0003	0.0000	0.0008	0.0000	0.0005
224-Mpentane	0.0000	0.0000	0.0000	0.0000	0.0000	0.0000
n-Heptane	0.0000	0.0005	0.0000	0.0014	0.0000	0.0009
Heptanes*	0.0000	0.0005	0.0000	0.0015	0.0000	0.0009
Mcyclohexane	0.0000	0.0009	0.0000	0.0027	0.0000	0.0016
Toluene	0.0000	0.0001	0.0000	0.0004	0.0000	0.0002
n-Octane	0.0000	0.0000	0.0000	0.0001	0.0000	0.0001
Octanes*	0.0000	0.0003	0.0000	0.0009	0.0000	0.0005
E-Benzene	0.0000	0.0000	0.0000	0.0000	0.0000	0.0000
m-Xylene	0.0000	0.0000	0.0000	0.0000	0.0000	0.0000
o-Xylene	0.0000	0.0000	0.0000	0.0000	0.0000	0.0000
p-Xylene	0.0000	0.0000	0.0000	0.0000	0.0000	0.0000
Nonanes*	0.0000	0.0000	0.0000	0.0001	0.0000	0.0001
Decanes*	0.0000	0.0000	0.0000	0.0000	0.0000	0.0000
Undecanes_3*	0.0000	0.0000	0.0000	0.0000	0.0000	0.0000
Dodecanes_3*	0.0000	0.0000	0.0000	0.0000	0.0000	0.0000
Triadecanes_3*	0.0000	0.0000	0.0000	0.0000	0.0000	0.0000
Tetradecanes_3*	0.0000	0.0000	0.0000	0.0000	0.0000	0.0000
Pentadecanes_3*	0.0000	0.0000	0.0000	0.0000	0.0000	0.0000
Hexadecanes_3*	0.0000	0.0000	0.0000	0.0000	0.0000	0.0000
Heptadecanes_3*	0.0000	0.0000	0.0000	0.0000	0.0000	0.0000
Octadecanes_3*	0.0000	0.0000	0.0000	0.0000	0.0000	0.0000
Nonadecanes_3*	0.0000	0.0000	0.0000	0.0000	0.0000	0.0000
eicosanes_3*	0.0000	0.0000	0.0000	0.0000	0.0000	0.0000
Heneicosanes_3*	0.0000	0.0000	0.0000	0.0000	0.0000	0.0000
Dodocosanes_3*	0.0000	0.0000	0.0000	0.0000	0.0000	0.0000
Triacosanes_3*	0.0000	0.0000	0.0000	0.0000	0.0000	0.0000

Licensed to: EXXONMOBIL TECHNICAL COM
* Specified by user.

Material Stream: Gas Inlet (continued)

Fluid Package: Peng Robinson
Property Package: Peng-Robinson

COMPOSITION

Liquid Phase (continued)

Phase Fraction 0.0000

COMPONENTS	MOLAR FLOW (lbmole/hr)	MOLE FRACTION	MASS FLOW (lb/hr)	MASS FRACTION	LIQUID VOLUME FLOW (barrel/day)	LIQUID VOLUME FRACTION
Tetracosanes_3*	0.0000	0.0000	0.0000	0.0000	0.0000	0.0000
Pentacosanes_3*	0.0000	0.0000	0.0000	0.0000	0.0000	0.0000
Hexacosanes_3*	0.0000	0.0000	0.0000	0.0000	0.0000	0.0000
Heptacosanes_3*	0.0000	0.0000	0.0000	0.0000	0.0000	0.0000
Octacosanes_3*	0.0000	0.0000	0.0000	0.0000	0.0000	0.0000
Nonacosanes_3*	0.0000	0.0000	0.0000	0.0000	0.0000	0.0000
Triacontanes*	0.0000	0.0000	0.0000	0.0000	0.0000	0.0000
C31+_2*	0.0000	0.0000	0.0000	0.0000	0.0000	0.0000
H2O	0.0000	0.0001	0.0000	0.0001	0.0000	0.0000
NC30*	0.0000	0.0000	0.0000	0.0000	0.0000	0.0000
n-Nonane	0.0000	0.0000	0.0000	0.0000	0.0000	0.0000
n-Decane	0.0000	0.0000	0.0000	0.0000	0.0000	0.0000
NC31-35*	0.0000	0.0000	0.0000	0.0000	0.0000	0.0000
TexaTherm	0.0000	0.0000	0.0000	0.0000	0.0000	0.0000
NC31-35_1*	0.0000	0.0000	0.0000	0.0000	0.0000	0.0000
CO	0.0000	0.0000	0.0000	0.0000	0.0000	0.0000
TEGlycol	0.0000	0.0000	0.0000	0.0000	0.0000	0.0000
SO2	0.0000	0.0000	0.0000	0.0000	0.0000	0.0000
C10+ (SS1H)*	0.0000	0.0000	0.0000	0.0000	0.0000	0.0000
464H C7+*	0.0000	0.0000	0.0000	0.0000	0.0000	0.0000
474Y c7+*	0.0000	0.0000	0.0000	0.0000	0.0000	0.0000
Total	0.0000	1.0000	0.0000	1.0000	0.0000	1.0000

Licensed to: EXXONMOBIL TECHNICAL COM
* Specified by user.

XTO ENERGY INC.
Cowboy CDP
PROCESS SIMULATION COMPONENTS

PROCESS SIMULATION COMPONENTS - DRAIN VESSEL OUTLET OIL

HYSYS PROCESS STREAM NAME:	To slop oil
HYSYS COMPONENTS	
Component	**Mole Frac**
Oxygen	0.000
H2S	0.000
Nitrogen	0.000
CO2	0.000
Methane	0.002
Ethane	0.023
Propane	0.194
i-Butane	0.058
n-Butane	0.166
22-Mpropane	0.001
i-Pentane	0.058
n-Pentane	0.073
22-Mbutane	0.001
Cyclopentane	0.000
23-Mbutane	0.007
2-Mpentane	0.021
3-Mpentane	0.012
n-Hexane	0.031
Hexanes*	0.000
Mcyclopentan	0.024
Benzene	0.020
Cyclohexane	0.049
2-Mhexane	0.008
3-Mhexane	0.008
224-Mpentane	0.000
n-Heptane	0.031
Heptanes*	0.003
Mcyclohexane	0.050
Toluene	0.028
n-Octane	0.042
Octanes*	0.004
E-Benzene	0.001
m-Xylene	0.006
o-Xylene	0.003
p-Xylene	0.006
Nonanes*	0.001
Decanes*	0.000
Undecanes_3*	0.011
Dodecanes_3*	0.004
Triadecanes_3*	0.002
Tetradecanes_3*	0.001
Pentadecanes_3*	0.000
Hexadecanes_3*	0.000
Heptadecanes_3*	0.000
Octadecanes_3*	0.000
Nonadecanes_3*	0.000
eicosanes_3*	0.000
Heneicosanes_3*	0.000
Dodocosanes_3*	0.000
Triacosanes_3*	0.000
Tetracosanes_3*	0.000
Pentacosanes_3*	0.000
Hexacosanes_3*	0.000
Heptacosanes_3*	0.000
Octacosanes_3*	0.000
Nonacosanes_3*	0.000
Triacontanes*	0.000
C31+_2*	0.000
H2O	0.000
NC30*	0.000
n-Nonane	0.029
n-Decane	0.019
NC31-35*	0.000
TexaTherm	0.000
NC31-35_1*	0.000
CO	0.000
TOTALS	1.000

Promax PROCESS STREAM NAME:	Drain Vessel Oil
PROMAX COMPONENTS	
Component	**Mole Frac**
Water	0.0002971
Hydrogen Sulfide	0.0000000
Nitrogen	0.0000069
Carbon Dioxide	0.0001589
Methane	0.0021530
Ethane	0.0231583
Propane	0.1937441
Iso-butane	0.0580180
N-butane	0.1661328
Iso-pentane	0.0580547
N-pentane	0.0729616
Cyclopentanes	0.0000000
Other Hexanes	0.0417720
n-Hexane	0.0313494
Methylcyclopentane	0.0244580
Benzene	0.0204093
Cyclohexane	0.0488517
2,2,4 Trimethylpentane	0.0000000
Other Heptanes	0.0194914
Methylcyclohexane	0.0503883
n-Heptane	0.0307889
Toluene	0.0280248
Octanes	0.0463735
Ethylbenzene	0.0013415
M&P-Xylene	0.0142718
Nonanes	0.0300359
Decanes	0.0191314
Undecanes	0.0186267
Total	1.000

Characteristics of Undecanes Plus	
Specific Gravity	0.8661
Molecular Weight (lb/lbmol)	262.912

EXXONMOBIL TECHNICAL COM Bedford, MA USA	Case Name:	Cowboy CDP CSH V6.4 winter-conservative.hsc
	Unit Set:	CSH 5b1
	Date/Time:	Wed Mar 18 18:25:10 2020

Material Stream: to slop oil

Fluid Package: Peng Robinson

Property Package: Peng-Robinson

CONDITIONS

	Overall	Liquid Phase
Vapour / Phase Fraction	0.0000	1.0000
Temperature: (F)	60.00	60.00
Pressure: (psig)	30.00	30.00
Molar Flow (MMSCFD)	6.294e-003	6.294e-003
Mass Flow (lb/hr)	51.67	51.67
Std Ideal Liq Vol Flow (barrel/day)	5.422	5.422
Molar Enthalpy (Btu/lbmole)	-6.923e+004	-6.923e+004
Molar Entropy (Btu/lbmole-F)	12.48	12.48
Heat Flow (Btu/hr)	-4.785e+004	-4.785e+004
Liq Vol Flow @Std Cond (barrel/day)	5.303 *	5.303

PROPERTIES

	Overall	Liquid Phase
Molecular Weight	74.77	74.77
Molar Density (lbmole/ft3)	0.5566	0.5566
Mass Density (lb/ft3)	41.61	41.61
Act. Volume Flow (barrel/day)	5.308	5.308
Mass Enthalpy (Btu/lb)	-926.0	-926.0
Mass Entropy (Btu/lb-F)	0.1670	0.1670
Heat Capacity (Btu/lbmole-F)	36.84	36.84
Mass Heat Capacity (Btu/lb-F)	0.4928	0.4928
LHV Molar Basis (Std) (Btu/SCF)	---	---
LHV Mass Basis (Std) (Btu/lb)	---	---
Phase Fraction [Vol. Basis]	0.0000	1.000
Phase Fraction [Mass Basis]	0.0000	1.000
Partial Pressure of CO2 (psig)	-14.70	---
Cost Based on Flow (Cost/s)	0.0000	0.0000
Act. Gas Flow (ACFM)	---	---
Avg. Liq. Density (lbmole/ft3)	0.5449	0.5449
Specific Heat (Btu/lbmole-F)	36.84	36.84
Std. Gas Flow (MMSCFD)	6.282e-003	6.282e-003
Std. Ideal Liq. Mass Density (lb/ft3)	40.74	40.74
Act. Liq. Flow (barrel/day)	5.308	5.308
Z Factor	1.440e-002	1.440e-002
Watson K	12.66	12.66
User Property	---	---
Cp/(Cp - R)	1.057	1.057
Cp/Cv	1.057	1.057
Heat of Vap. (Btu/lbmole)	1.884e+004	---
Kinematic Viscosity (cSt)	0.4850	0.4850
Liq. Mass Density (Std. Cond) (lb/ft3)	41.65	41.65
Liq. Vol. Flow (Std. Cond) (barrel/day)	5.303	5.303
Liquid Fraction	1.000	1.000
Molar Volume (ft3/lbmole)	1.797	1.797
Mass Heat of Vap. (Btu/lb)	252.0	---
Phase Fraction [Molar Basis]	0.0000	1.0000
Surface Tension (dyne/cm)	16.35	16.35
Thermal Conductivity (Btu/hr-ft-F)	6.326e-002	6.326e-002
Viscosity (cP)	0.3233	0.3233
Cv (Semi-Ideal) (Btu/lbmole-F)	34.86	34.86
Mass Cv (Semi-Ideal) (Btu/lb-F)	0.4662	0.4662

Licensed to: EXXONMOBIL TECHNICAL COM

* Specified by user.

Material Stream: to slop oil (continued)

Fluid Package: Peng Robinson
Property Package: Peng-Robinson

PROPERTIES

		Overall	Liquid Phase			
Cv	(Btu/lbmole-F)	34.86	34.86			
Mass Cv	(Btu/lb-F)	0.4662	0.4662			
Cv (Ent. Method)	(Btu/lbmole-F)	---	---			
Mass Cv (Ent. Method)	(Btu/lb-F)	---	---			
Cp/Cv (Ent. Method)		---	---			
Liq. Vol. Flow - Sum(Std. Cond)	(barrel/day)	5.303	5.303			
Partial Pressure of H2S	(psig)	-14.70	---			
Reid VP at 37.8 C	(psig)	41.53	41.53			
True VP at 37.8 C	(psig)	57.26	57.26			
Viscosity Index		-9.130	---			
HHV Molar Basis (Std)	(Btu/SCF)	---	---			
HHV Mass Basis (Std)	(Btu/lb)	---	---			
CO2 Loading		---	---			
CO2 Apparent Mole Conc.	(lbmole/ft3)	8.845e-005	8.845e-005			
CO2 Apparent Wt. Conc.	(lbmol/lb)	2.125e-006	2.125e-006			
Phase Fraction [Act. Vol. Basis]		0.0000	1.000			
Mass Exergy	(Btu/lb)	3.927	---			
Ideal Gas Cp/Cv		1.079	1.079			
Ideal Gas Cp	(Btu/lbmole-F)	27.12	27.12			
Mass Ideal Gas Cp	(Btu/lb-F)	0.3628	0.3628			
Bubble Point Pressure	(psig)	30.00	---			

COMPOSITION

Overall Phase

Vapour Fraction 0.0000

COMPONENTS	MOLAR FLOW (lbmole/hr)	MOLE FRACTION	MASS FLOW (lb/hr)	MASS FRACTION	LIQUID VOLUME FLOW (barrel/day)	LIQUID VOLUME FRACTION
Oxygen	0.0000	0.0000	0.0000	0.0000	0.0000	0.0000
H2S	0.0000	0.0000	0.0000	0.0000	0.0000	0.0000
Nitrogen	0.0000	0.0000	0.0001	0.0000	0.0000	0.0000
CO2	0.0001	0.0002	0.0048	0.0001	0.0004	0.0001
Methane	0.0015	0.0022	0.0239	0.0005	0.0055	0.0010
Ethane	0.0160	0.0232	0.4813	0.0093	0.0927	0.0171
Propane	0.1339	0.1937	5.9047	0.1143	0.7980	0.1472
i-Butane	0.0401	0.0580	2.3307	0.0451	0.2840	0.0524
n-Butane	0.1148	0.1661	6.6738	0.1292	0.7835	0.1445
22-Mpropane	0.0008	0.0012	0.0600	0.0012	0.0069	0.0013
i-Pentane	0.0401	0.0581	2.8949	0.0560	0.3179	0.0586
n-Pentane	0.0504	0.0730	3.6383	0.0704	0.3956	0.0730
22-Mbutane	0.0004	0.0006	0.0376	0.0007	0.0039	0.0007
Cyclopentane	0.0000	0.0000	0.0000	0.0000	0.0000	0.0000
23-Mbutane	0.0048	0.0069	0.4131	0.0080	0.0425	0.0078
2-Mpentane	0.0144	0.0208	1.2418	0.0240	0.1295	0.0239
3-Mpentane	0.0084	0.0122	0.7237	0.0140	0.0742	0.0137
n-Hexane	0.0217	0.0313	1.8672	0.0361	0.1929	0.0356
Hexanes*	0.0000	0.0000	0.0000	0.0000	0.0000	0.0000
Mcyclopentan	0.0169	0.0245	1.4226	0.0275	0.1295	0.0239
Benzene	0.0141	0.0204	1.1018	0.0213	0.0855	0.0158
Cyclohexane	0.0338	0.0489	2.8415	0.0550	0.2489	0.0459
2-Mhexane	0.0058	0.0084	0.5791	0.0112	0.0582	0.0107
3-Mhexane	0.0053	0.0077	0.5348	0.0103	0.0531	0.0098

Licensed to: EXXONMOBIL TECHNICAL COM
* Specified by user.

Material Stream: to slop oil (continued)

Fluid Package: Peng Robinson
Property Package: Peng-Robinson

COMPOSITION

Overall Phase (continued)

Vapour Fraction 0.0000

COMPONENTS	MOLAR FLOW (lbmole/hr)	MOLE FRACTION	MASS FLOW (lb/hr)	MASS FRACTION	LIQUID VOLUME FLOW (barrel/day)	LIQUID VOLUME FRACTION
224-Mpentane	0.0000	0.0000	0.0000	0.0000	0.0000	0.0000
n-Heptane	0.0213	0.0308	2.1323	0.0413	0.2126	0.0392
Heptanes*	0.0024	0.0034	0.2261	0.0044	0.0213	0.0039
Mcyclohexane	0.0348	0.0504	3.4194	0.0662	0.3031	0.0559
Toluene	0.0194	0.0280	1.7847	0.0345	0.1405	0.0259
n-Octane	0.0292	0.0423	3.3368	0.0646	0.3239	0.0597
Octanes*	0.0028	0.0041	0.3039	0.0059	0.0278	0.0051
E-Benzene	0.0009	0.0013	0.0984	0.0019	0.0077	0.0014
m-Xylene	0.0038	0.0055	0.4069	0.0079	0.0321	0.0059
o-Xylene	0.0022	0.0032	0.2352	0.0046	0.0182	0.0034
p-Xylene	0.0038	0.0055	0.4052	0.0078	0.0321	0.0059
Nonanes*	0.0009	0.0012	0.1044	0.0020	0.0093	0.0017
Decanes*	0.0002	0.0003	0.0300	0.0006	0.0026	0.0005
Undecanes_3*	0.0078	0.0113	1.1432	0.0221	0.0988	0.0182
Dodecanes_3*	0.0030	0.0043	0.4762	0.0092	0.0406	0.0075
Triadecanes_3*	0.0014	0.0021	0.2523	0.0049	0.0212	0.0039
Tetradecanes_3*	0.0005	0.0007	0.0917	0.0018	0.0076	0.0014
Pentadecanes_3*	0.0002	0.0002	0.0316	0.0006	0.0026	0.0005
Hexadecanes_3*	0.0000	0.0001	0.0089	0.0002	0.0007	0.0001
Heptadecanes_3*	0.0000	0.0000	0.0030	0.0001	0.0002	0.0000
Octadecanes_3*	0.0000	0.0000	0.0013	0.0000	0.0001	0.0000
Nonadecanes_3*	0.0000	0.0000	0.0006	0.0000	0.0000	0.0000
eicosanes_3*	0.0000	0.0000	0.0002	0.0000	0.0000	0.0000
Heneicosanes_3*	0.0000	0.0000	0.0001	0.0000	0.0000	0.0000
Dodocosanes_3*	0.0000	0.0000	0.0000	0.0000	0.0000	0.0000
Triacosanes_3*	0.0000	0.0000	0.0000	0.0000	0.0000	0.0000
Tetracosanes_3*	0.0000	0.0000	0.0000	0.0000	0.0000	0.0000
Pentacosanes_3*	0.0000	0.0000	0.0000	0.0000	0.0000	0.0000
Hexacosanes_3*	0.0000	0.0000	0.0000	0.0000	0.0000	0.0000
Heptacosanes_3*	0.0000	0.0000	0.0000	0.0000	0.0000	0.0000
Octacosanes_3*	0.0000	0.0000	0.0000	0.0000	0.0000	0.0000
Nonacosanes_3*	0.0000	0.0000	0.0000	0.0000	0.0000	0.0000
Triacontanes*	0.0000	0.0000	0.0000	0.0000	0.0000	0.0000
C31+_2*	0.0000	0.0000	0.0000	0.0000	0.0000	0.0000
H2O	0.0002	0.0003	0.0037	0.0001	0.0003	0.0000
NC30*	0.0000	0.0000	0.0000	0.0000	0.0000	0.0000
n-Nonane	0.0199	0.0288	2.5519	0.0494	0.2426	0.0447
n-Decane	0.0130	0.0188	1.8495	0.0358	0.1728	0.0319
NC31-35*	0.0000	0.0000	0.0000	0.0000	0.0000	0.0000
TexaTherm	0.0000	0.0000	0.0000	0.0000	0.0000	0.0000
NC31-35_1*	0.0000	0.0000	0.0000	0.0000	0.0000	0.0000
CO	0.0000	0.0000	0.0000	0.0000	0.0000	0.0000
TEGlycol	0.0000	0.0000	0.0000	0.0000	0.0000	0.0000
SO2	0.0000	0.0000	0.0000	0.0000	0.0000	0.0000
C10+ (SS1H)*	0.0000	0.0000	0.0000	0.0000	0.0000	0.0000
464H C7+*	0.0000	0.0000	0.0000	0.0000	0.0000	0.0000
474Y c7+*	0.0000	0.0000	0.0000	0.0000	0.0000	0.0000
Total	0.6911	1.0000	51.6730	1.0000	5.4219	1.0000

Licensed to: EXXONMOBIL TECHNICAL COM
* Specified by user.

Material Stream: to slop oil (continued)

Fluid Package: Peng Robinson
Property Package: Peng-Robinson

COMPOSITION

Liquid Phase

Phase Fraction 1.000

COMPONENTS	MOLAR FLOW (lbmole/hr)	MOLE FRACTION	MASS FLOW (lb/hr)	MASS FRACTION	LIQUID VOLUME FLOW (barrel/day)	LIQUID VOLUME FRACTION
Oxygen	0.0000	0.0000	0.0000	0.0000	0.0000	0.0000
H2S	0.0000	0.0000	0.0000	0.0000	0.0000	0.0000
Nitrogen	0.0000	0.0000	0.0001	0.0000	0.0000	0.0000
CO2	0.0001	0.0002	0.0048	0.0001	0.0004	0.0001
Methane	0.0015	0.0022	0.0239	0.0005	0.0055	0.0010
Ethane	0.0160	0.0232	0.4813	0.0093	0.0927	0.0171
Propane	0.1339	0.1937	5.9047	0.1143	0.7980	0.1472
i-Butane	0.0401	0.0580	2.3307	0.0451	0.2840	0.0524
n-Butane	0.1148	0.1661	6.6738	0.1292	0.7835	0.1445
22-Mpropane	0.0008	0.0012	0.0600	0.0012	0.0069	0.0013
i-Pentane	0.0401	0.0581	2.8949	0.0560	0.3179	0.0586
n-Pentane	0.0504	0.0730	3.6383	0.0704	0.3956	0.0730
22-Mbutane	0.0004	0.0006	0.0376	0.0007	0.0039	0.0007
Cyclopentane	0.0000	0.0000	0.0000	0.0000	0.0000	0.0000
23-Mbutane	0.0048	0.0069	0.4131	0.0080	0.0425	0.0078
2-Mpentane	0.0144	0.0208	1.2418	0.0240	0.1295	0.0239
3-Mpentane	0.0084	0.0122	0.7237	0.0140	0.0742	0.0137
n-Hexane	0.0217	0.0313	1.8672	0.0361	0.1929	0.0356
Hexanes*	0.0000	0.0000	0.0000	0.0000	0.0000	0.0000
Mcyclopentan	0.0169	0.0245	1.4226	0.0275	0.1295	0.0239
Benzene	0.0141	0.0204	1.1018	0.0213	0.0855	0.0158
Cyclohexane	0.0338	0.0489	2.8415	0.0550	0.2489	0.0459
2-Mhexane	0.0058	0.0084	0.5791	0.0112	0.0582	0.0107
3-Mhexane	0.0053	0.0077	0.5348	0.0103	0.0531	0.0098
224-Mpentane	0.0000	0.0000	0.0000	0.0000	0.0000	0.0000
n-Heptane	0.0213	0.0308	2.1323	0.0413	0.2126	0.0392
Heptanes*	0.0024	0.0034	0.2261	0.0044	0.0213	0.0039
Mcyclohexane	0.0348	0.0504	3.4194	0.0662	0.3031	0.0559
Toluene	0.0194	0.0280	1.7847	0.0345	0.1405	0.0259
n-Octane	0.0292	0.0423	3.3368	0.0646	0.3239	0.0597
Octanes*	0.0028	0.0041	0.3039	0.0059	0.0278	0.0051
E-Benzene	0.0009	0.0013	0.0984	0.0019	0.0077	0.0014
m-Xylene	0.0038	0.0055	0.4069	0.0079	0.0321	0.0059
o-Xylene	0.0022	0.0032	0.2352	0.0046	0.0182	0.0034
p-Xylene	0.0038	0.0055	0.4052	0.0078	0.0321	0.0059
Nonanes*	0.0009	0.0012	0.1044	0.0020	0.0093	0.0017
Decanes*	0.0002	0.0003	0.0300	0.0006	0.0026	0.0005
Undecanes_3*	0.0078	0.0113	1.1432	0.0221	0.0988	0.0182
Dodecanes_3*	0.0030	0.0043	0.4762	0.0092	0.0406	0.0075
Triadecanes_3*	0.0014	0.0021	0.2523	0.0049	0.0212	0.0039
Tetradecanes_3*	0.0005	0.0007	0.0917	0.0018	0.0076	0.0014
Pentadecanes_3*	0.0002	0.0002	0.0316	0.0006	0.0026	0.0005
Hexadecanes_3*	0.0000	0.0001	0.0089	0.0002	0.0007	0.0001
Heptadecanes_3*	0.0000	0.0000	0.0030	0.0001	0.0002	0.0000
Octadecanes_3*	0.0000	0.0000	0.0013	0.0000	0.0001	0.0000
Nonadecanes_3*	0.0000	0.0000	0.0006	0.0000	0.0000	0.0000
eicosanes_3*	0.0000	0.0000	0.0002	0.0000	0.0000	0.0000
Heneicosanes_3*	0.0000	0.0000	0.0001	0.0000	0.0000	0.0000

Licensed to: EXXONMOBIL TECHNICAL COM
* Specified by user.

Material Stream: to slop oil (continued)

Fluid Package: Peng Robinson
Property Package: Peng-Robinson

COMPOSITION

Liquid Phase (continued)

Phase Fraction 1.000

COMPONENTS	MOLAR FLOW (lbmole/hr)	MOLE FRACTION	MASS FLOW (lb/hr)	MASS FRACTION	LIQUID VOLUME FLOW (barrel/day)	LIQUID VOLUME FRACTION
Dodocosanes_3*	0.0000	0.0000	0.0000	0.0000	0.0000	0.0000
Triacosanes_3*	0.0000	0.0000	0.0000	0.0000	0.0000	0.0000
Tetracosanes_3*	0.0000	0.0000	0.0000	0.0000	0.0000	0.0000
Pentacosanes_3*	0.0000	0.0000	0.0000	0.0000	0.0000	0.0000
Hexacosanes_3*	0.0000	0.0000	0.0000	0.0000	0.0000	0.0000
Heptacosanes_3*	0.0000	0.0000	0.0000	0.0000	0.0000	0.0000
Octacosanes_3*	0.0000	0.0000	0.0000	0.0000	0.0000	0.0000
Nonacosanes_3*	0.0000	0.0000	0.0000	0.0000	0.0000	0.0000
Triacontanes*	0.0000	0.0000	0.0000	0.0000	0.0000	0.0000
C31+_2*	0.0000	0.0000	0.0000	0.0000	0.0000	0.0000
H2O	0.0002	0.0003	0.0037	0.0001	0.0003	0.0000
NC30*	0.0000	0.0000	0.0000	0.0000	0.0000	0.0000
n-Nonane	0.0199	0.0288	2.5519	0.0494	0.2426	0.0447
n-Decane	0.0130	0.0188	1.8495	0.0358	0.1728	0.0319
NC31-35*	0.0000	0.0000	0.0000	0.0000	0.0000	0.0000
TexaTherm	0.0000	0.0000	0.0000	0.0000	0.0000	0.0000
NC31-35_1*	0.0000	0.0000	0.0000	0.0000	0.0000	0.0000
CO	0.0000	0.0000	0.0000	0.0000	0.0000	0.0000
TEGlycol	0.0000	0.0000	0.0000	0.0000	0.0000	0.0000
SO2	0.0000	0.0000	0.0000	0.0000	0.0000	0.0000
C10+ (SS1H)*	0.0000	0.0000	0.0000	0.0000	0.0000	0.0000
464H C7+*	0.0000	0.0000	0.0000	0.0000	0.0000	0.0000
474Y c7+*	0.0000	0.0000	0.0000	0.0000	0.0000	0.0000
Total	0.6911	1.0000	51.6730	1.0000	5.4219	1.0000

Licensed to: EXXONMOBIL TECHNICAL COM
* Specified by user.

XTO ENERGY INC.
Cowboy CDP
PROCESS SIMULATION COMPONENTS

PROCESS SIMULATION COMPONENTS - DRAIN VESSEL OUTLET WATER

HYSYS PROCESS STREAM NAME:	To GB2
HYSYS COMPONENTS	
Component	**Mole Frac**
Oxygen	0.0000
H2S	0.0000
Nitrogen	0.0000
CO2	0.0000
Methane	0.0000
Ethane	0.0000
Propane	0.0000
i-Butane	0.0000
n-Butane	0.0000
22-Mpropane	0.0000
i-Pentane	0.0000
n-Pentane	0.0000
22-Mbutane	0.0000
Cyclopentane	0.0000
23-Mbutane	0.0000
2-Mpentane	0.0000
3-Mpentane	0.0000
n-Hexane	0.0000
Hexanes*	0.0000
Mcyclopentan	0.0000
Benzene	0.0000
Cyclohexane	0.0000
2-Mhexane	0.0000
3-Mhexane	0.0000
224-Mpentane	0.0000
n-Heptane	0.0000
Heptanes*	0.0000
Mcyclohexane	0.0000
Toluene	0.0000
n-Octane	0.0000
Octanes*	0.0000
E-Benzene	0.0000
m-Xylene	0.0000
o-Xylene	0.0000
p-Xylene	0.0000
Nonanes*	0.0000
Decanes*	0.0000
Undecanes_3*	0.0000
Dodecanes_3*	0.0000
Triadecanes_3*	0.0000
Tetradecanes_3*	0.0000
Pentadecanes_3*	0.0000
Hexadecanes_3*	0.0000
Heptadecanes_3*	0.0000
Octadecanes_3*	0.0000
Nonadecanes_3*	0.0000
eicosanes_3*	0.0000
Heneicosanes_3*	0.0000
Dodocosanes_3*	0.0000
Triacosanes_3*	0.0000
Tetracosanes_3*	0.0000
Pentacosanes_3*	0.0000
Hexacosanes_3*	0.0000
Heptacosanes_3*	0.0000
Octacosanes_3*	0.0000
Nonacosanes_3*	0.0000
Triacontanes*	0.0000
C31+_2*	0.0000
H2O	0.9998
NC30*	0.0000
n-Nonane	0.0000
n-Decane	0.0000
NC31-35*	0.0000
TexaTherm	0.0000
NC31-35_1*	0.0000
CO	0.0000
TOTALS	1.000

Promax PROCESS STREAM NAME:	Drain Vessel Water
PROMAX COMPONENTS	
Component	**Mole Frac**
Water	0.9997937
Hydrogen Sulfide	0.0000000
Nitrogen	0.0000001
Carbon Dioxide	0.0000061
Methane	0.0000004
Ethane	0.0000046
Propane	0.0000388
Iso-butane	0.0000116
N-butane	0.0000333
Iso-pentane	0.0000116
N-pentane	0.0000146
Cyclopentanes	0.0000000
Other Hexanes	0.0000084
n-Hexane	0.0000063
Methylcyclopentane	0.0000049
Benzene	0.0000041
Cyclohexane	0.0000098
2,2,4 Trimethylpentane	0.0000000
Other Heptanes	0.0000039
Methylcyclohexane	0.0000101
n-Heptane	0.0000062
Toluene	0.0000056
Octanes	0.0000093
Ethylbenzene	0.0000003
M&P-Xylene	0.0000029
Nonanes	0.0000060
Decanes	0.0000038
Undecanes	0.0000037
Total	1.000

Characteristics of Undecanes Plus	
Specific Gravity	0.8661
Molecular Weight (lb/lbmol)	262.912

EXXONMOBIL TECHNICAL COM Bedford, MA USA	Case Name:	Cowboy CDP CSH V6.4 winter-conservative.hsc
	Unit Set:	CSH 5b1
	Date/Time:	Thu Mar 19 09:14:51 2020

Material Stream: to GB2

Fluid Package: Peng Robinson

Property Package: Peng-Robinson

CONDITIONS

	Overall	Vapour Phase	Liquid Phase	Aqueous Phase
Vapour / Phase Fraction	0.0001	0.0001	0.0001	0.9998
Temperature: (F)	60.05	60.05	60.05	60.05
Pressure: (psig)	0.2500	0.2500	0.2500	0.2500
Molar Flow (MMSCFD)	0.3176	2.143e-005	4.270e-005	0.3176
Mass Flow (lb/hr)	628.7	0.1209	0.4027	628.2
Std Ideal Liq Vol Flow (barrel/day)	43.15	1.507e-002	3.982e-002	43.10
Molar Enthalpy (Btu/lbmole)	-1.234e+005	-5.216e+004	-7.444e+004	-1.234e+005
Molar Entropy (Btu/lbmole-F)	12.23	38.28	8.324	12.23
Heat Flow (Btu/hr)	-4.302e+006	-122.8	-349.0	-4.302e+006
Liq Vol Flow @Std Cond (barrel/day)	42.41 *	1.475e-002	3.928e-002	42.38

PROPERTIES

	Overall	Vapour Phase	Liquid Phase	Aqueous Phase
Molecular Weight	18.03	51.37	85.89	18.02
Molar Density (lbmole/ft3)	3.234	2.746e-003	0.5098	3.515
Mass Density (lb/ft3)	58.29	0.1411	43.79	63.33
Act. Volume Flow (barrel/day)	46.11	3.663	3.931e-002	42.40
Mass Enthalpy (Btu/lb)	-6843	-1015	-866.7	-6848
Mass Entropy (Btu/lb-F)	0.6786	0.7451	9.692e-002	0.6789
Heat Capacity (Btu/lbmole-F)	18.57	20.12	40.58	18.57
Mass Heat Capacity (Btu/lb-F)	1.030	0.3917	0.4725	1.031
LHV Molar Basis (Std) (Btu/SCF)	---	---	---	2.291e-008
LHV Mass Basis (Std) (Btu/lb)	---	---	---	4.826e-007
Phase Fraction [Vol. Basis]	3.492e-004	3.492e-004	9.228e-004	0.9987
Phase Fraction [Mass Basis]	1.923e-004	1.923e-004	6.405e-004	0.9992
Partial Pressure of CO2 (psig)	-14.56	---	---	---
Cost Based on Flow (Cost/s)	0.0000	0.0000	0.0000	0.0000
Act. Gas Flow (ACFM)	1.428e-002	1.428e-002	---	---
Avg. Liq. Density (lbmole/ft3)	3.455	0.6676	0.5033	3.458
Specific Heat (Btu/lbmole-F)	18.57	20.12	40.58	18.57
Std. Gas Flow (MMSCFD)	0.3170	2.139e-005	4.262e-005	0.3170
Std. Ideal Liq. Mass Density (lb/ft3)	62.27	34.29	43.22	62.30
Act. Liq. Flow (barrel/day)	42.44	---	3.931e-002	42.40
Z Factor	---	0.9759	5.256e-003	7.623e-004
Watson K	12.58	14.00	12.28	8.520
User Property	---	---	---	---
Cp/(Cp - R)	1.120	1.109	1.051	1.120
Cp/Cv	1.000	1.120	1.335	1.141
Heat of Vap. (Btu/lbmole)	2.176e+004	---	---	---
Kinematic Viscosity (cSt)	---	3.354	0.6102	1.103
Liq. Mass Density (Std. Cond) (lb/ft3)	63.37	35.04	43.82	63.35
Liq. Vol. Flow (Std. Cond) (barrel/day)	42.41	1.475e-002	3.928e-002	42.38
Liquid Fraction	0.9999	0.0000	1.000	1.000
Molar Volume (ft3/lbmole)	0.3093	364.2	1.961	0.2845
Mass Heat of Vap. (Btu/lb)	1207	---	---	---
Phase Fraction [Molar Basis]	0.0001	0.0001	0.0001	0.9998
Surface Tension (dyne/cm)	---	---	19.31	73.72
Thermal Conductivity (Btu/hr-ft-F)	---	9.072e-003	6.677e-002	0.3445
Viscosity (cP)	---	7.579e-003	0.4280	1.119
Cv (Semi-Ideal) (Btu/lbmole-F)	16.59	18.14	38.59	16.58
Mass Cv (Semi-Ideal) (Btu/lb-F)	0.9201	0.3531	0.4493	0.9205

Licensed to: EXXONMOBIL TECHNICAL COM

* Specified by user.

Material Stream: to GB2 (continued)

Fluid Package: Peng Robinson
Property Package: Peng-Robinson

PROPERTIES

	Overall	Vapour Phase	Liquid Phase	Aqueous Phase
Cv (Btu/lbmole-F)	18.57	17.97	30.39	16.28
Mass Cv (Btu/lb-F)	1.030	0.3498	0.3538	0.9037
Cv (Ent. Method) (Btu/lbmole-F)	---	---	35.34	17.73
Mass Cv (Ent. Method) (Btu/lb-F)	---	---	0.4114	0.9839
Cp/Cv (Ent. Method)	---	---	1.148	1.048
Liq. Vol. Flow - Sum(Std. Cond) (barrel/day)	42.44	1.475e-002	3.928e-002	42.38
Partial Pressure of H2S (psig)	-14.70	---	---	---
Reid VP at 37.8 C (psig)	57.13	125.9	8.717	-13.54
True VP at 37.8 C (psig)	56.09	164.0	12.14	-13.54
Viscosity Index	4.562	---	---	---
HHV Molar Basis (Std) (Btu/SCF)	---	---	---	46.46
HHV Mass Basis (Std) (Btu/lb)	---	---	---	978.7
CO2 Loading	---	---	---	---
CO2 Apparent Mole Conc. (lbmole/ft3)	1.982e-005	---	7.319e-005	1.939e-005
CO2 Apparent Wt. Conc. (lbmol/lb)	3.399e-007	---	1.672e-006	3.062e-007
Phase Fraction [Act. Vol. Basis]	7.946e-002	7.946e-002	8.526e-004	0.9197
Mass Exergy (Btu/lb)	0.2848	---	---	---
Ideal Gas Cp/Cv	1.330	1.111	1.070	1.330
Ideal Gas Cp (Btu/lbmole-F)	8.012	19.94	30.49	8.008
Mass Ideal Gas Cp (Btu/lb-F)	0.4444	0.3881	0.3550	0.4445
Bubble Point Pressure (psig)	28.16	---	---	---

COMPOSITION

Overall Phase

Vapour Fraction 0.0001

COMPONENTS	MOLAR FLOW (lbmole/hr)	MOLE FRACTION	MASS FLOW (lb/hr)	MASS FRACTION	LIQUID VOLUME FLOW (barrel/day)	LIQUID VOLUME FRACTION
Oxygen	0.0000	0.0000	0.0000	0.0000	0.0000	0.0000
H2S	0.0000	0.0000	0.0000	0.0000	0.0000	0.0000
Nitrogen	0.0000	0.0000	0.0001	0.0000	0.0000	0.0000
CO2	0.0002	0.0000	0.0094	0.0000	0.0008	0.0000
Methane	0.0000	0.0000	0.0002	0.0000	0.0001	0.0000
Ethane	0.0002	0.0000	0.0049	0.0000	0.0009	0.0000
Propane	0.0014	0.0000	0.0596	0.0001	0.0081	0.0002
i-Butane	0.0004	0.0000	0.0235	0.0000	0.0029	0.0001
n-Butane	0.0012	0.0000	0.0674	0.0001	0.0079	0.0002
22-Mpropane	0.0000	0.0000	0.0006	0.0000	0.0001	0.0000
i-Pentane	0.0004	0.0000	0.0292	0.0000	0.0032	0.0001
n-Pentane	0.0005	0.0000	0.0368	0.0001	0.0040	0.0001
22-Mbutane	0.0000	0.0000	0.0004	0.0000	0.0000	0.0000
Cyclopentane	0.0000	0.0000	0.0000	0.0000	0.0000	0.0000
23-Mbutane	0.0000	0.0000	0.0042	0.0000	0.0004	0.0000
2-Mpentane	0.0001	0.0000	0.0125	0.0000	0.0013	0.0000
3-Mpentane	0.0001	0.0000	0.0073	0.0000	0.0007	0.0000
n-Hexane	0.0002	0.0000	0.0189	0.0000	0.0019	0.0000
Hexanes*	0.0000	0.0000	0.0000	0.0000	0.0000	0.0000
Mcyclopentan	0.0002	0.0000	0.0144	0.0000	0.0013	0.0000
Benzene	0.0001	0.0000	0.0111	0.0000	0.0009	0.0000
Cyclohexane	0.0003	0.0000	0.0287	0.0000	0.0025	0.0001
2-Mhexane	0.0001	0.0000	0.0058	0.0000	0.0006	0.0000
3-Mhexane	0.0001	0.0000	0.0054	0.0000	0.0005	0.0000

Licensed to: EXXONMOBIL TECHNICAL COM
* Specified by user.

Material Stream: to GB2 (continued)

Fluid Package: Peng Robinson
Property Package: Peng-Robinson

COMPOSITION

Overall Phase (continued)

Vapour Fraction 0.0001

COMPONENTS	MOLAR FLOW (lbmole/hr)	MOLE FRACTION	MASS FLOW (lb/hr)	MASS FRACTION	LIQUID VOLUME FLOW (barrel/day)	LIQUID VOLUME FRACTION
224-Mpentane	0.0000	0.0000	0.0000	0.0000	0.0000	0.0000
n-Heptane	0.0002	0.0000	0.0215	0.0000	0.0021	0.0000
Heptanes*	0.0000	0.0000	0.0023	0.0000	0.0002	0.0000
Mcyclohexane	0.0004	0.0000	0.0345	0.0001	0.0031	0.0001
Toluene	0.0002	0.0000	0.0180	0.0000	0.0014	0.0000
n-Octane	0.0003	0.0000	0.0337	0.0001	0.0033	0.0001
Octanes*	0.0000	0.0000	0.0031	0.0000	0.0003	0.0000
E-Benzene	0.0000	0.0000	0.0010	0.0000	0.0001	0.0000
m-Xylene	0.0000	0.0000	0.0041	0.0000	0.0003	0.0000
o-Xylene	0.0000	0.0000	0.0024	0.0000	0.0002	0.0000
p-Xylene	0.0000	0.0000	0.0041	0.0000	0.0003	0.0000
Nonanes*	0.0000	0.0000	0.0011	0.0000	0.0001	0.0000
Decanes*	0.0000	0.0000	0.0003	0.0000	0.0000	0.0000
Undecanes_3*	0.0001	0.0000	0.0115	0.0000	0.0010	0.0000
Dodecanes_3*	0.0000	0.0000	0.0048	0.0000	0.0004	0.0000
Triadecanes_3*	0.0000	0.0000	0.0025	0.0000	0.0002	0.0000
Tetradecanes_3*	0.0000	0.0000	0.0009	0.0000	0.0001	0.0000
Pentadecanes_3*	0.0000	0.0000	0.0003	0.0000	0.0000	0.0000
Hexadecanes_3*	0.0000	0.0000	0.0001	0.0000	0.0000	0.0000
Heptadecanes_3*	0.0000	0.0000	0.0000	0.0000	0.0000	0.0000
Octadecanes_3*	0.0000	0.0000	0.0000	0.0000	0.0000	0.0000
Nonadecanes_3*	0.0000	0.0000	0.0000	0.0000	0.0000	0.0000
eicosanes_3*	0.0000	0.0000	0.0000	0.0000	0.0000	0.0000
Heneicosanes_3*	0.0000	0.0000	0.0000	0.0000	0.0000	0.0000
Dodocosanes_3*	0.0000	0.0000	0.0000	0.0000	0.0000	0.0000
Triacosanes_3*	0.0000	0.0000	0.0000	0.0000	0.0000	0.0000
Tetracosanes_3*	0.0000	0.0000	0.0000	0.0000	0.0000	0.0000
Pentacosanes_3*	0.0000	0.0000	0.0000	0.0000	0.0000	0.0000
Hexacosanes_3*	0.0000	0.0000	0.0000	0.0000	0.0000	0.0000
Heptacosanes_3*	0.0000	0.0000	0.0000	0.0000	0.0000	0.0000
Octacosanes_3*	0.0000	0.0000	0.0000	0.0000	0.0000	0.0000
Nonacosanes_3*	0.0000	0.0000	0.0000	0.0000	0.0000	0.0000
Triacontanes*	0.0000	0.0000	0.0000	0.0000	0.0000	0.0000
C31+_2*	0.0000	0.0000	0.0000	0.0000	0.0000	0.0000
H2O	34.8691	0.9998	628.1761	0.9992	43.0993	0.9987
NC30*	0.0000	0.0000	0.0000	0.0000	0.0000	0.0000
n-Nonane	0.0002	0.0000	0.0258	0.0000	0.0025	0.0001
n-Decane	0.0001	0.0000	0.0187	0.0000	0.0017	0.0000
NC31-35*	0.0000	0.0000	0.0000	0.0000	0.0000	0.0000
TexaTherm	0.0000	0.0000	0.0000	0.0000	0.0000	0.0000
NC31-35_1*	0.0000	0.0000	0.0000	0.0000	0.0000	0.0000
CO	0.0000	0.0000	0.0000	0.0000	0.0000	0.0000
TEGlycol	0.0000	0.0000	0.0000	0.0000	0.0000	0.0000
SO2	0.0000	0.0000	0.0000	0.0000	0.0000	0.0000
C10+ (SS1H)*	0.0000	0.0000	0.0000	0.0000	0.0000	0.0000
464H C7+*	0.0000	0.0000	0.0000	0.0000	0.0000	0.0000
474Y c7+*	0.0000	0.0000	0.0000	0.0000	0.0000	0.0000
Total	34.8762	1.0000	628.7074	1.0000	43.1549	1.0000

Licensed to: EXXONMOBIL TECHNICAL COM
* Specified by user.

Material Stream: to GB2 (continued)

Fluid Package: Peng Robinson
Property Package: Peng-Robinson

COMPOSITION

Vapour Phase

Phase Fraction 6.748e-005

COMPONENTS	MOLAR FLOW (lbmole/hr)	MOLE FRACTION	MASS FLOW (lb/hr)	MASS FRACTION	LIQUID VOLUME FLOW (barrel/day)	LIQUID VOLUME FRACTION
Oxygen	0.0000	0.0000	0.0000	0.0000	0.0000	0.0000
H2S	0.0000	0.0000	0.0000	0.0000	0.0000	0.0000
Nitrogen	0.0000	0.0008	0.0001	0.0004	0.0000	0.0003
CO2	0.0000	0.0088	0.0009	0.0075	0.0001	0.0050
Methane	0.0000	0.0063	0.0002	0.0020	0.0001	0.0036
Ethane	0.0002	0.0642	0.0045	0.0376	0.0009	0.0580
Propane	0.0011	0.4491	0.0466	0.3855	0.0063	0.4180
i-Butane	0.0002	0.0969	0.0133	0.1097	0.0016	0.1072
n-Butane	0.0005	0.2303	0.0315	0.2606	0.0037	0.2454
22-Mpropane	0.0000	0.0014	0.0002	0.0020	0.0000	0.0018
i-Pentane	0.0001	0.0428	0.0073	0.0601	0.0008	0.0529
n-Pentane	0.0001	0.0420	0.0071	0.0590	0.0008	0.0514
22-Mbutane	0.0000	0.0002	0.0000	0.0004	0.0000	0.0003
Cyclopentane	0.0000	0.0000	0.0000	0.0000	0.0000	0.0000
23-Mbutane	0.0000	0.0020	0.0004	0.0034	0.0000	0.0028
2-Mpentane	0.0000	0.0055	0.0011	0.0093	0.0001	0.0078
3-Mpentane	0.0000	0.0029	0.0006	0.0048	0.0001	0.0039
n-Hexane	0.0000	0.0059	0.0012	0.0099	0.0001	0.0082
Hexanes*	0.0000	0.0000	0.0000	0.0000	0.0000	0.0000
Mcyclopentan	0.0000	0.0043	0.0009	0.0071	0.0001	0.0052
Benzene	0.0000	0.0035	0.0006	0.0053	0.0000	0.0033
Cyclohexane	0.0000	0.0069	0.0014	0.0114	0.0001	0.0080
2-Mhexane	0.0000	0.0007	0.0002	0.0013	0.0000	0.0011
3-Mhexane	0.0000	0.0006	0.0001	0.0012	0.0000	0.0009
224-Mpentane	0.0000	0.0000	0.0000	0.0000	0.0000	0.0000
n-Heptane	0.0000	0.0018	0.0004	0.0036	0.0000	0.0029
Heptanes*	0.0000	0.0002	0.0001	0.0005	0.0000	0.0003
Mcyclohexane	0.0000	0.0033	0.0008	0.0063	0.0001	0.0045
Toluene	0.0000	0.0014	0.0003	0.0024	0.0000	0.0015
n-Octane	0.0000	0.0008	0.0002	0.0017	0.0000	0.0014
Octanes*	0.0000	0.0001	0.0000	0.0002	0.0000	0.0002
E-Benzene	0.0000	0.0000	0.0000	0.0000	0.0000	0.0000
m-Xylene	0.0000	0.0001	0.0000	0.0001	0.0000	0.0001
o-Xylene	0.0000	0.0000	0.0000	0.0001	0.0000	0.0000
p-Xylene	0.0000	0.0001	0.0000	0.0001	0.0000	0.0001
Nonanes*	0.0000	0.0000	0.0000	0.0000	0.0000	0.0000
Decanes*	0.0000	0.0000	0.0000	0.0000	0.0000	0.0000
Undecanes_3*	0.0000	0.0000	0.0000	0.0000	0.0000	0.0000
Dodecanes_3*	0.0000	0.0000	0.0000	0.0000	0.0000	0.0000
Triadecanes_3*	0.0000	0.0000	0.0000	0.0000	0.0000	0.0000
Tetradecanes_3*	0.0000	0.0000	0.0000	0.0000	0.0000	0.0000
Pentadecanes_3*	0.0000	0.0000	0.0000	0.0000	0.0000	0.0000
Hexadecanes_3*	0.0000	0.0000	0.0000	0.0000	0.0000	0.0000
Heptadecanes_3*	0.0000	0.0000	0.0000	0.0000	0.0000	0.0000
Octadecanes_3*	0.0000	0.0000	0.0000	0.0000	0.0000	0.0000
Nonadecanes_3*	0.0000	0.0000	0.0000	0.0000	0.0000	0.0000
eicosanes_3*	0.0000	0.0000	0.0000	0.0000	0.0000	0.0000
Heneicosanes_3*	0.0000	0.0000	0.0000	0.0000	0.0000	0.0000

Licensed to: EXXONMOBIL TECHNICAL COM
* Specified by user.

Material Stream: to GB2 (continued)

Fluid Package: Peng Robinson
Property Package: Peng-Robinson

COMPOSITION

Vapour Phase (continued)

Phase Fraction 6.748e-005

COMPONENTS	MOLAR FLOW (lbmole/hr)	MOLE FRACTION	MASS FLOW (lb/hr)	MASS FRACTION	LIQUID VOLUME FLOW (barrel/day)	LIQUID VOLUME FRACTION
Dodocosanes_3*	0.0000	0.0000	0.0000	0.0000	0.0000	0.0000
Triacosanes_3*	0.0000	0.0000	0.0000	0.0000	0.0000	0.0000
Tetracosanes_3*	0.0000	0.0000	0.0000	0.0000	0.0000	0.0000
Pentacosanes_3*	0.0000	0.0000	0.0000	0.0000	0.0000	0.0000
Hexacosanes_3*	0.0000	0.0000	0.0000	0.0000	0.0000	0.0000
Heptacosanes_3*	0.0000	0.0000	0.0000	0.0000	0.0000	0.0000
Octacosanes_3*	0.0000	0.0000	0.0000	0.0000	0.0000	0.0000
Nonacosanes_3*	0.0000	0.0000	0.0000	0.0000	0.0000	0.0000
Triacontanes*	0.0000	0.0000	0.0000	0.0000	0.0000	0.0000
C31+_2*	0.0000	0.0000	0.0000	0.0000	0.0000	0.0000
H2O	0.0000	0.0167	0.0007	0.0059	0.0000	0.0032
NC30*	0.0000	0.0000	0.0000	0.0000	0.0000	0.0000
n-Nonane	0.0000	0.0002	0.0001	0.0004	0.0000	0.0003
n-Decane	0.0000	0.0000	0.0000	0.0001	0.0000	0.0001
NC31-35*	0.0000	0.0000	0.0000	0.0000	0.0000	0.0000
TexaTherm	0.0000	0.0000	0.0000	0.0000	0.0000	0.0000
NC31-35_1*	0.0000	0.0000	0.0000	0.0000	0.0000	0.0000
CO	0.0000	0.0000	0.0000	0.0000	0.0000	0.0000
TEGlycol	0.0000	0.0000	0.0000	0.0000	0.0000	0.0000
SO2	0.0000	0.0000	0.0000	0.0000	0.0000	0.0000
C10+ (SS1H)*	0.0000	0.0000	0.0000	0.0000	0.0000	0.0000
464H C7+*	0.0000	0.0000	0.0000	0.0000	0.0000	0.0000
474Y c7+*	0.0000	0.0000	0.0000	0.0000	0.0000	0.0000
Total	0.0024	1.0000	0.1209	1.0000	0.0151	1.0000

Liquid Phase

Phase Fraction 1.344e-004

COMPONENTS	MOLAR FLOW (lbmole/hr)	MOLE FRACTION	MASS FLOW (lb/hr)	MASS FRACTION	LIQUID VOLUME FLOW (barrel/day)	LIQUID VOLUME FRACTION
Oxygen	0.0000	0.0000	0.0000	0.0000	0.0000	0.0000
H2S	0.0000	0.0000	0.0000	0.0000	0.0000	0.0000
Nitrogen	0.0000	0.0000	0.0000	0.0000	0.0000	0.0000
CO2	0.0000	0.0001	0.0000	0.0001	0.0000	0.0001
Methane	0.0000	0.0000	0.0000	0.0000	0.0000	0.0000
Ethane	0.0000	0.0023	0.0003	0.0008	0.0001	0.0016
Propane	0.0003	0.0630	0.0130	0.0324	0.0018	0.0442
i-Butane	0.0002	0.0377	0.0103	0.0255	0.0013	0.0315
n-Butane	0.0006	0.1318	0.0359	0.0892	0.0042	0.1059
22-Mpropane	0.0000	0.0011	0.0004	0.0009	0.0000	0.0011
i-Pentane	0.0003	0.0650	0.0220	0.0546	0.0024	0.0606
n-Pentane	0.0004	0.0876	0.0296	0.0736	0.0032	0.0809
22-Mbutane	0.0000	0.0008	0.0003	0.0008	0.0000	0.0009
Cyclopentane	0.0000	0.0000	0.0000	0.0000	0.0000	0.0000
23-Mbutane	0.0000	0.0093	0.0038	0.0093	0.0004	0.0097
2-Mpentane	0.0001	0.0283	0.0114	0.0284	0.0012	0.0299
3-Mpentane	0.0001	0.0167	0.0067	0.0167	0.0007	0.0173
n-Hexane	0.0002	0.0437	0.0177	0.0438	0.0018	0.0458
Hexanes*	0.0000	0.0000	0.0000	0.0000	0.0000	0.0000
Mcyclopentan	0.0002	0.0342	0.0135	0.0336	0.0012	0.0309

Licensed to: EXXONMOBIL TECHNICAL COM
* Specified by user.

Material Stream: to GB2 (continued)

Fluid Package: Peng Robinson
Property Package: Peng-Robinson

COMPOSITION

Liquid Phase (continued)

Phase Fraction 1.344e-004

COMPONENTS	MOLAR FLOW (lbmole/hr)	MOLE FRACTION	MASS FLOW (lb/hr)	MASS FRACTION	LIQUID VOLUME FLOW (barrel/day)	LIQUID VOLUME FRACTION
Benzene	0.0001	0.0286	0.0105	0.0261	0.0008	0.0204
Cyclohexane	0.0003	0.0693	0.0273	0.0679	0.0024	0.0601
2-Mhexane	0.0001	0.0121	0.0057	0.0141	0.0006	0.0144
3-Mhexane	0.0001	0.0112	0.0053	0.0131	0.0005	0.0131
224-Mpentane	0.0000	0.0000	0.0000	0.0000	0.0000	0.0000
n-Heptane	0.0002	0.0449	0.0211	0.0524	0.0021	0.0528
Heptanes*	0.0000	0.0050	0.0022	0.0055	0.0002	0.0053
Mcyclohexane	0.0003	0.0734	0.0338	0.0839	0.0030	0.0752
Toluene	0.0002	0.0410	0.0177	0.0440	0.0014	0.0350
n-Octane	0.0003	0.0625	0.0335	0.0832	0.0033	0.0816
Octanes*	0.0000	0.0061	0.0030	0.0075	0.0003	0.0070
E-Benzene	0.0000	0.0020	0.0010	0.0025	0.0001	0.0020
m-Xylene	0.0000	0.0082	0.0041	0.0102	0.0003	0.0081
o-Xylene	0.0000	0.0048	0.0024	0.0059	0.0002	0.0046
p-Xylene	0.0000	0.0082	0.0041	0.0101	0.0003	0.0081
Nonanes*	0.0000	0.0019	0.0011	0.0026	0.0001	0.0024
Decanes*	0.0000	0.0005	0.0003	0.0008	0.0000	0.0007
Undecanes_3*	0.0001	0.0167	0.0115	0.0287	0.0010	0.0251
Dodecanes_3*	0.0000	0.0064	0.0048	0.0119	0.0004	0.0103
Triadecanes_3*	0.0000	0.0031	0.0025	0.0063	0.0002	0.0054
Tetradecanes_3*	0.0000	0.0010	0.0009	0.0023	0.0001	0.0019
Pentadecanes_3*	0.0000	0.0003	0.0003	0.0008	0.0000	0.0007
Hexadecanes_3*	0.0000	0.0001	0.0001	0.0002	0.0000	0.0002
Heptadecanes_3*	0.0000	0.0000	0.0000	0.0001	0.0000	0.0001
Octadecanes_3*	0.0000	0.0000	0.0000	0.0000	0.0000	0.0000
Nonadecanes_3*	0.0000	0.0000	0.0000	0.0000	0.0000	0.0000
eicosanes_3*	0.0000	0.0000	0.0000	0.0000	0.0000	0.0000
Heneicosanes_3*	0.0000	0.0000	0.0000	0.0000	0.0000	0.0000
Dodocosanes_3*	0.0000	0.0000	0.0000	0.0000	0.0000	0.0000
Triacosanes_3*	0.0000	0.0000	0.0000	0.0000	0.0000	0.0000
Tetracosanes_3*	0.0000	0.0000	0.0000	0.0000	0.0000	0.0000
Pentacosanes_3*	0.0000	0.0000	0.0000	0.0000	0.0000	0.0000
Hexacosanes_3*	0.0000	0.0000	0.0000	0.0000	0.0000	0.0000
Heptacosanes_3*	0.0000	0.0000	0.0000	0.0000	0.0000	0.0000
Octacosanes_3*	0.0000	0.0000	0.0000	0.0000	0.0000	0.0000
Nonacosanes_3*	0.0000	0.0000	0.0000	0.0000	0.0000	0.0000
Triacontanes*	0.0000	0.0000	0.0000	0.0000	0.0000	0.0000
C31+_2*	0.0000	0.0000	0.0000	0.0000	0.0000	0.0000
H2O	0.0000	0.0003	0.0000	0.0001	0.0000	0.0000
NC30*	0.0000	0.0000	0.0000	0.0000	0.0000	0.0000
n-Nonane	0.0002	0.0428	0.0257	0.0639	0.0024	0.0614
n-Decane	0.0001	0.0280	0.0187	0.0464	0.0017	0.0438
NC31-35*	0.0000	0.0000	0.0000	0.0000	0.0000	0.0000
TexaTherm	0.0000	0.0000	0.0000	0.0000	0.0000	0.0000
NC31-35_1*	0.0000	0.0000	0.0000	0.0000	0.0000	0.0000
CO	0.0000	0.0000	0.0000	0.0000	0.0000	0.0000
TEGlycol	0.0000	0.0000	0.0000	0.0000	0.0000	0.0000
SO2	0.0000	0.0000	0.0000	0.0000	0.0000	0.0000

Licensed to: EXXONMOBIL TECHNICAL COM
* Specified by user.

Material Stream: to GB2 (continued)

Fluid Package: Peng Robinson
Property Package: Peng-Robinson

COMPOSITION

Liquid Phase (continued)

Phase Fraction 1.344e-004

COMPONENTS	MOLAR FLOW (lbmole/hr)	MOLE FRACTION	MASS FLOW (lb/hr)	MASS FRACTION	LIQUID VOLUME FLOW (barrel/day)	LIQUID VOLUME FRACTION
C10+ (SS1H)*	0.0000	0.0000	0.0000	0.0000	0.0000	0.0000
464H C7+*	0.0000	0.0000	0.0000	0.0000	0.0000	0.0000
474Y c7+*	0.0000	0.0000	0.0000	0.0000	0.0000	0.0000
Total	0.0047	1.0000	0.4027	1.0000	0.0398	1.0000

Aqueous Phase

Phase Fraction 0.9998

COMPONENTS	MOLAR FLOW (lbmole/hr)	MOLE FRACTION	MASS FLOW (lb/hr)	MASS FRACTION	LIQUID VOLUME FLOW (barrel/day)	LIQUID VOLUME FRACTION
Oxygen	0.0000	0.0000	0.0000	0.0000	0.0000	0.0000
H2S	0.0000	0.0000	0.0000	0.0000	0.0000	0.0000
Nitrogen	0.0000	0.0000	0.0000	0.0000	0.0000	0.0000
CO2	0.0002	0.0000	0.0085	0.0000	0.0007	0.0000
Methane	0.0000	0.0000	0.0000	0.0000	0.0000	0.0000
Ethane	0.0000	0.0000	0.0000	0.0000	0.0000	0.0000
Propane	0.0000	0.0000	0.0000	0.0000	0.0000	0.0000
i-Butane	0.0000	0.0000	0.0000	0.0000	0.0000	0.0000
n-Butane	0.0000	0.0000	0.0000	0.0000	0.0000	0.0000
22-Mpropane	0.0000	0.0000	0.0000	0.0000	0.0000	0.0000
i-Pentane	0.0000	0.0000	0.0000	0.0000	0.0000	0.0000
n-Pentane	0.0000	0.0000	0.0000	0.0000	0.0000	0.0000
22-Mbutane	0.0000	0.0000	0.0000	0.0000	0.0000	0.0000
Cyclopentane	0.0000	0.0000	0.0000	0.0000	0.0000	0.0000
23-Mbutane	0.0000	0.0000	0.0000	0.0000	0.0000	0.0000
2-Mpentane	0.0000	0.0000	0.0000	0.0000	0.0000	0.0000
3-Mpentane	0.0000	0.0000	0.0000	0.0000	0.0000	0.0000
n-Hexane	0.0000	0.0000	0.0000	0.0000	0.0000	0.0000
Hexanes*	0.0000	0.0000	0.0000	0.0000	0.0000	0.0000
Mcyclopentan	0.0000	0.0000	0.0000	0.0000	0.0000	0.0000
Benzene	0.0000	0.0000	0.0000	0.0000	0.0000	0.0000
Cyclohexane	0.0000	0.0000	0.0000	0.0000	0.0000	0.0000
2-Mhexane	0.0000	0.0000	0.0000	0.0000	0.0000	0.0000
3-Mhexane	0.0000	0.0000	0.0000	0.0000	0.0000	0.0000
224-Mpentane	0.0000	0.0000	0.0000	0.0000	0.0000	0.0000
n-Heptane	0.0000	0.0000	0.0000	0.0000	0.0000	0.0000
Heptanes*	0.0000	0.0000	0.0000	0.0000	0.0000	0.0000
Mcyclohexane	0.0000	0.0000	0.0000	0.0000	0.0000	0.0000
Toluene	0.0000	0.0000	0.0000	0.0000	0.0000	0.0000
n-Octane	0.0000	0.0000	0.0000	0.0000	0.0000	0.0000
Octanes*	0.0000	0.0000	0.0000	0.0000	0.0000	0.0000
E-Benzene	0.0000	0.0000	0.0000	0.0000	0.0000	0.0000
m-Xylene	0.0000	0.0000	0.0000	0.0000	0.0000	0.0000
o-Xylene	0.0000	0.0000	0.0000	0.0000	0.0000	0.0000
p-Xylene	0.0000	0.0000	0.0000	0.0000	0.0000	0.0000
Nonanes*	0.0000	0.0000	0.0000	0.0000	0.0000	0.0000
Decanes*	0.0000	0.0000	0.0000	0.0000	0.0000	0.0000
Undecanes_3*	0.0000	0.0000	0.0000	0.0000	0.0000	0.0000
Dodecanes_3*	0.0000	0.0000	0.0000	0.0000	0.0000	0.0000
Triadecanes_3*	0.0000	0.0000	0.0000	0.0000	0.0000	0.0000

Licensed to: EXXONMOBIL TECHNICAL COM
* Specified by user.

Material Stream: to GB2 (continued)

Fluid Package: Peng Robinson
Property Package: Peng-Robinson

COMPOSITION

Aqueous Phase (continued)

Phase Fraction 0.9998

COMPONENTS	MOLAR FLOW (lbmole/hr)	MOLE FRACTION	MASS FLOW (lb/hr)	MASS FRACTION	LIQUID VOLUME FLOW (barrel/day)	LIQUID VOLUME FRACTION
Tetradecanes_3*	0.0000	0.0000	0.0000	0.0000	0.0000	0.0000
Pentadecanes_3*	0.0000	0.0000	0.0000	0.0000	0.0000	0.0000
Hexadecanes_3*	0.0000	0.0000	0.0000	0.0000	0.0000	0.0000
Heptadecanes_3*	0.0000	0.0000	0.0000	0.0000	0.0000	0.0000
Octadecanes_3*	0.0000	0.0000	0.0000	0.0000	0.0000	0.0000
Nonadecanes_3*	0.0000	0.0000	0.0000	0.0000	0.0000	0.0000
eicosanes_3*	0.0000	0.0000	0.0000	0.0000	0.0000	0.0000
Heneicosanes_3*	0.0000	0.0000	0.0000	0.0000	0.0000	0.0000
Dodocosanes_3*	0.0000	0.0000	0.0000	0.0000	0.0000	0.0000
Triacosanes_3*	0.0000	0.0000	0.0000	0.0000	0.0000	0.0000
Tetracosanes_3*	0.0000	0.0000	0.0000	0.0000	0.0000	0.0000
Pentacosanes_3*	0.0000	0.0000	0.0000	0.0000	0.0000	0.0000
Hexacosanes_3*	0.0000	0.0000	0.0000	0.0000	0.0000	0.0000
Heptacosanes_3*	0.0000	0.0000	0.0000	0.0000	0.0000	0.0000
Octacosanes_3*	0.0000	0.0000	0.0000	0.0000	0.0000	0.0000
Nonacosanes_3*	0.0000	0.0000	0.0000	0.0000	0.0000	0.0000
Triacontanes*	0.0000	0.0000	0.0000	0.0000	0.0000	0.0000
C31+_2*	0.0000	0.0000	0.0000	0.0000	0.0000	0.0000
H2O	34.8690	1.0000	628.1753	1.0000	43.0993	1.0000
NC30*	0.0000	0.0000	0.0000	0.0000	0.0000	0.0000
n-Nonane	0.0000	0.0000	0.0000	0.0000	0.0000	0.0000
n-Decane	0.0000	0.0000	0.0000	0.0000	0.0000	0.0000
NC31-35*	0.0000	0.0000	0.0000	0.0000	0.0000	0.0000
TexaTherm	0.0000	0.0000	0.0000	0.0000	0.0000	0.0000
NC31-35_1*	0.0000	0.0000	0.0000	0.0000	0.0000	0.0000
CO	0.0000	0.0000	0.0000	0.0000	0.0000	0.0000
TEGlycol	0.0000	0.0000	0.0000	0.0000	0.0000	0.0000
SO2	0.0000	0.0000	0.0000	0.0000	0.0000	0.0000
C10+ (SS1H)*	0.0000	0.0000	0.0000	0.0000	0.0000	0.0000
464H C7+*	0.0000	0.0000	0.0000	0.0000	0.0000	0.0000
474Y c7+*	0.0000	0.0000	0.0000	0.0000	0.0000	0.0000
Total	34.8692	1.0000	628.1838	1.0000	43.1000	1.0000

Licensed to: EXXONMOBIL TECHNICAL COM
* Specified by user.

XTO ENERGY INC.
Cowboy CDP
PROCESS SIMULATION COMPONENTS

PROCESS SIMULATION COMPONENTS - SURGE VESSEL WATER

HYSYS PROCESS STREAM NAME:	WiO2
HYSYS COMPONENTS	
Component	**Mole Frac**
Oxygen	0.0000
H2S	0.0000
Nitrogen	0.0000
CO2	0.0000
Methane	0.0000
Ethane	0.0000
Propane	0.0000
i-Butane	0.0000
n-Butane	0.0000
22-Mpropane	0.0000
i-Pentane	0.0000
n-Pentane	0.0000
22-Mbutane	0.0000
Cyclopentane	0.0000
23-Mbutane	0.0000
2-Mpentane	0.0000
3-Mpentane	0.0000
n-Hexane	0.0000
Hexanes*	0.0000
Mcyclopentan	0.0000
Benzene	0.0000
Cyclohexane	0.0000
2-Mhexane	0.0000
3-Mhexane	0.0000
224-Mpentane	0.0000
n-Heptane	0.0000
Heptanes*	0.0000
Mcyclohexane	0.0000
Toluene	0.0000
n-Octane	0.0000
Octanes*	0.0000
E-Benzene	0.0000
m-Xylene	0.0000
o-Xylene	0.0000
p-Xylene	0.0000
Nonanes*	0.0000
Decanes*	0.0000
Undecanes_3*	0.0000
Dodecanes_3*	0.0000
Triadecanes_3*	0.0000
Tetradecanes_3*	0.0000
Pentadecanes_3*	0.0000
Hexadecanes_3*	0.0000
Heptadecanes_3*	0.0000
Octadecanes_3*	0.0000
Nonadecanes_3*	0.0000
eicosanes_3*	0.0000
Heneicosanes_3*	0.0000
Dodocosanes_3*	0.0000
Triacosanes_3*	0.0000
Tetracosanes_3*	0.0000
Pentacosanes_3*	0.0000
Hexacosanes_3*	0.0000
Heptacosanes_3*	0.0000
Octacosanes_3*	0.0000
Nonacosanes_3*	0.0000
Triacontanes*	0.0000
C31+_2*	0.0000
H2O	0.9998
NC30*	0.0000
n-Nonane	0.0000
n-Decane	0.0000
NC31-35*	0.0000
TexaTherm	0.0000
NC31-35_1*	0.0000
CO	0.0000
TOTALS	100.000

Promax PROCESS STREAM NAME:	Surge Vessel Water
PROMAX COMPONENTS	
Component	**Mole Frac**
Water	0.99979373
Hydrogen Sulfide	0.00000000
Nitrogen	0.00000007
Carbon Dioxide	0.00000613
Methane	0.00000043
Ethane	0.00000464
Propane	0.00003878
Iso-butane	0.00001161
N-butane	0.00003325
Iso-pentane	0.00001162
N-pentane	0.00001460
Cyclopentanes	0.00000000
Other Hexanes	0.00000836
n-Hexane	0.00000628
Methylcyclopentane	0.00000490
Benzene	0.00000409
Cyclohexane	0.00000978
2,2,4 Trimethylpentane	0.00000000
Other Heptanes	0.00000390
Methylcyclohexane	0.00001009
n-Heptane	0.00000616
Toluene	0.00000561
Octanes	0.00000928
Ethylbenzene	0.00000027
M&P-Xylene	0.00000286
Nonanes	0.00000601
Decanes	0.00000383
Undecanes	0.00000373
Total	1.000

Characteristics of Undecanes Plus	
Specific Gravity	0.8661
Molecular Weight (lb/lbmol)	262.912

EXXONMOBIL TECHNICAL COM Bedford, MA USA	Case Name:	Cowboy CDP CSH V6.4 winter-conservative.hsc
	Unit Set:	CSH 5b1
	Date/Time:	Thu Mar 19 09:14:22 2020

Material Stream: WiO2

Fluid Package: Peng Robinson

Property Package: Peng-Robinson

CONDITIONS

	Overall	Vapour Phase	Liquid Phase	Aqueous Phase
Vapour / Phase Fraction	0.0000	0.0000	0.0019	0.9981
Temperature: (F)	79.80	79.80	79.80	79.80
Pressure: (psig)	0.2500	0.2500	0.2500	0.2500
Molar Flow (MMSCFD)	7.297	5.548e-005	1.400e-002	7.283
Mass Flow (lb/hr)	1.464e+004	0.2808	233.4	1.441e+004
Std Ideal Liq Vol Flow (barrel/day)	1009	3.760e-002	20.14	988.5
Molar Enthalpy (Btu/lbmole)	-1.230e+005	-4.830e+004	-1.336e+005	-1.230e+005
Molar Entropy (Btu/lbmole-F)	13.01	41.31	56.44	12.92
Heat Flow (Btu/hr)	-9.858e+007	-294.3	-2.054e+005	-9.837e+007
Liq Vol Flow @Std Cond (barrel/day)	988.6 *	3.566e-002	20.04	972.1

PROPERTIES

	Overall	Vapour Phase	Liquid Phase	Aqueous Phase
Molecular Weight	18.27	46.09	151.8	18.02
Molar Density (lbmole/ft3)	3.389	2.629e-003	0.3241	3.487
Mass Density (lb/ft3)	61.93	0.1212	49.21	62.81
Act. Volume Flow (barrel/day)	1011	9.906	20.27	980.5
Mass Enthalpy (Btu/lb)	-6733	-1048	-880.2	-6828
Mass Entropy (Btu/lb-F)	0.7119	0.8963	0.3718	0.7174
Heat Capacity (Btu/lbmole-F)	18.66	18.66	70.88	18.56
Mass Heat Capacity (Btu/lb-F)	1.021	0.4049	0.4669	1.030
LHV Molar Basis (Std) (Btu/SCF)	---	---	---	6.393e-008
LHV Mass Basis (Std) (Btu/lb)	---	---	---	1.346e-006
Phase Fraction [Vol. Basis]	3.728e-005	3.728e-005	1.996e-002	0.9800
Phase Fraction [Mass Basis]	1.918e-005	1.918e-005	1.594e-002	0.9840
Partial Pressure of CO2 (psig)	-14.67	---	---	---
Cost Based on Flow (Cost/s)	0.0000	0.0000	0.0000	0.0000
Act. Gas Flow (ACFM)	3.862e-002	3.862e-002	---	---
Avg. Liq. Density (lbmole/ft3)	3.396	0.6925	0.3264	3.458
Specific Heat (Btu/lbmole-F)	18.66	18.66	70.88	18.56
Std. Gas Flow (MMSCFD)	7.284	5.538e-005	1.398e-002	7.270
Std. Ideal Liq. Mass Density (lb/ft3)	62.05	31.92	49.55	62.30
Act. Liq. Flow (barrel/day)	1001	---	20.27	980.5
Z Factor	---	0.9821	7.965e-003	7.404e-004
Watson K	11.86	14.80	11.86	8.524
User Property	---	---	---	---
Cp/(Cp - R)	1.119	1.119	1.029	1.120
Cp/Cv	1.000	1.128	1.214	1.148
Heat of Vap. (Btu/lbmole)	2.253e+004	---	---	---
Kinematic Viscosity (cSt)	---	4.251	2.581	0.8544
Liq. Mass Density (Std. Cond) (lb/ft3)	63.31	33.65	49.79	63.35
Liq. Vol. Flow (Std. Cond) (barrel/day)	988.6	3.566e-002	20.04	972.1
Liquid Fraction	1.000	0.0000	1.000	1.000
Molar Volume (ft3/lbmole)	0.2951	380.4	3.085	0.2868
Mass Heat of Vap. (Btu/lb)	1233	---	---	---
Phase Fraction [Molar Basis]	0.0000	0.0000	0.0019	0.9981
Surface Tension (dyne/cm)	---	---	22.30	71.83
Thermal Conductivity (Btu/hr-ft-F)	0.3448	1.020e-002	6.914e-002	0.3544
Viscosity (cP)	0.8955	8.250e-003	2.035	0.8597
Cv (Semi-Ideal) (Btu/lbmole-F)	16.67	16.67	68.89	16.57
Mass Cv (Semi-Ideal) (Btu/lb-F)	0.9126	0.3618	0.4538	0.9200

Licensed to: EXXONMOBIL TECHNICAL COM

* Specified by user.

Material Stream: WiO2 (continued)

Fluid Package: Peng Robinson
Property Package: Peng-Robinson

PROPERTIES

		Overall	Vapour Phase	Liquid Phase	Aqueous Phase
Cv	(Btu/lbmole-F)	18.65	16.55	58.38	16.17
Mass Cv	(Btu/lb-F)	1.021	0.3591	0.3845	0.8974
Cv (Ent. Method)	(Btu/lbmole-F)	---	---	62.28	15.82
Mass Cv (Ent. Method)	(Btu/lb-F)	---	---	0.4103	0.8781
Cp/Cv (Ent. Method)		---	---	1.138	1.173
Liq. Vol. Flow - Sum(Std. Cond)	(barrel/day)	992.2	3.566e-002	20.04	972.1
Partial Pressure of H2S	(psig)	-14.70	---	---	---
Reid VP at 37.8 C	(psig)	-0.6078	208.0	-1.318	-13.72
True VP at 37.8 C	(psig)	5.705	255.3	4.434	-13.72
Viscosity Index		1.705	---	---	---
HHV Molar Basis (Std)	(Btu/SCF)	---	---	---	46.46
HHV Mass Basis (Std)	(Btu/lb)	---	---	---	978.7
CO2 Loading		---	---	---	---
CO2 Apparent Mole Conc.	(lbmole/ft3)	3.393e-006	---	9.387e-006	3.252e-006
CO2 Apparent Wt. Conc.	(lbmol/lb)	5.480e-008	---	1.908e-007	5.177e-008
Phase Fraction [Act. Vol. Basis]		9.802e-003	9.802e-003	2.006e-002	0.9701
Mass Exergy	(Btu/lb)	8.320e-003	---	---	---
Ideal Gas Cp/Cv		1.324	1.120	1.036	1.329
Ideal Gas Cp	(Btu/lbmole-F)	8.115	18.52	56.70	8.022
Mass Ideal Gas Cp	(Btu/lb-F)	0.4441	0.4018	0.3735	0.4453
Bubble Point Pressure	(psig)	0.9793	---	---	---

COMPOSITION

Overall Phase

Vapour Fraction 0.0000

COMPONENTS	MOLAR FLOW (lbmole/hr)	MOLE FRACTION	MASS FLOW (lb/hr)	MASS FRACTION	LIQUID VOLUME FLOW (barrel/day)	LIQUID VOLUME FRACTION
Oxygen	0.0000	0.0000	0.0000	0.0000	0.0000	0.0000
H2S	0.0000	0.0000	0.0000	0.0000	0.0000	0.0000
Nitrogen	0.0000	0.0000	0.0000	0.0000	0.0000	0.0000
CO2	0.0008	0.0000	0.0353	0.0000	0.0029	0.0000
Methane	0.0000	0.0000	0.0003	0.0000	0.0001	0.0000
Ethane	0.0131	0.0000	0.3933	0.0000	0.0757	0.0001
Propane	0.0586	0.0001	2.5848	0.0002	0.3493	0.0003
i-Butane	0.0224	0.0000	1.3000	0.0001	0.1584	0.0002
n-Butane	0.0802	0.0001	4.6622	0.0003	0.5474	0.0005
22-Mpropane	0.0009	0.0000	0.0658	0.0000	0.0076	0.0000
i-Pentane	0.0443	0.0001	3.1942	0.0002	0.3508	0.0003
n-Pentane	0.0585	0.0001	4.2181	0.0003	0.4586	0.0005
22-Mbutane	0.0006	0.0000	0.0544	0.0000	0.0057	0.0000
Cyclopentane	0.0000	0.0000	0.0000	0.0000	0.0000	0.0000
23-Mbutane	0.0087	0.0000	0.7484	0.0001	0.0770	0.0001
2-Mpentane	0.0238	0.0000	2.0472	0.0001	0.2135	0.0002
3-Mpentane	0.0144	0.0000	1.2416	0.0001	0.1273	0.0001
n-Hexane	0.0381	0.0000	3.2834	0.0002	0.3393	0.0003
Hexanes*	0.0000	0.0000	0.0000	0.0000	0.0000	0.0000
Mcyclopentan	0.0307	0.0000	2.5835	0.0002	0.2352	0.0002
Benzene	0.0316	0.0000	2.4700	0.0002	0.1917	0.0002
Cyclohexane	0.0714	0.0001	6.0106	0.0004	0.5264	0.0005
2-Mhexane	0.0135	0.0000	1.3556	0.0001	0.1362	0.0001
3-Mhexane	0.0123	0.0000	1.2288	0.0001	0.1219	0.0001

Licensed to: EXXONMOBIL TECHNICAL COM
* Specified by user.

Material Stream: WiO2 (continued)

Fluid Package: Peng Robinson
Property Package: Peng-Robinson

COMPOSITION

Overall Phase (continued)

Vapour Fraction 0.0000

COMPONENTS	MOLAR FLOW (lbmole/hr)	MOLE FRACTION	MASS FLOW (lb/hr)	MASS FRACTION	LIQUID VOLUME FLOW (barrel/day)	LIQUID VOLUME FRACTION
224-Mpentane	0.0000	0.0000	0.0000	0.0000	0.0000	0.0000
n-Heptane	0.0574	0.0001	5.7500	0.0004	0.5732	0.0006
Heptanes*	0.0000	0.0000	0.0000	0.0000	0.0000	0.0000
Mcyclohexane	0.0856	0.0001	8.4060	0.0006	0.7452	0.0007
Toluene	0.0526	0.0001	4.8466	0.0003	0.3814	0.0004
n-Octane	0.1047	0.0001	11.9644	0.0008	1.1614	0.0012
Octanes*	0.0000	0.0000	0.0000	0.0000	0.0000	0.0000
E-Benzene	0.0029	0.0000	0.3046	0.0000	0.0240	0.0000
m-Xylene	0.0131	0.0000	1.3887	0.0001	0.1097	0.0001
o-Xylene	0.0073	0.0000	0.7795	0.0001	0.0604	0.0001
p-Xylene	0.0131	0.0000	1.3887	0.0001	0.1100	0.0001
Nonanes*	0.0000	0.0000	0.0000	0.0000	0.0000	0.0000
Decanes*	0.0000	0.0000	0.0000	0.0000	0.0000	0.0000
Undecanes_3*	0.0649	0.0001	9.5463	0.0007	0.8254	0.0008
Dodecanes_3*	0.0460	0.0001	7.4008	0.0005	0.6310	0.0006
Triadecanes_3*	0.0491	0.0001	8.5842	0.0006	0.7230	0.0007
Tetradecanes_3*	0.0412	0.0001	7.8253	0.0005	0.6516	0.0006
Pentadecanes_3*	0.0362	0.0000	7.4674	0.0005	0.6152	0.0006
Hexadecanes_3*	0.0258	0.0000	5.7188	0.0004	0.4667	0.0005
Heptadecanes_3*	0.0216	0.0000	5.1181	0.0003	0.4142	0.0004
Octadecanes_3*	0.0204	0.0000	5.1107	0.0003	0.4106	0.0004
Nonadecanes_3*	0.0190	0.0000	4.9899	0.0003	0.3985	0.0004
eicosanes_3*	0.0125	0.0000	3.4275	0.0002	0.2722	0.0003
Heneicosanes_3*	0.0125	0.0000	3.6269	0.0002	0.2860	0.0003
Dodocosanes_3*	0.0101	0.0000	3.0172	0.0002	0.2369	0.0002
Triacosanes_3*	0.0089	0.0000	2.7914	0.0002	0.2180	0.0002
Tetracosanes_3*	0.0077	0.0000	2.4839	0.0002	0.1930	0.0002
Pentacosanes_3*	0.0066	0.0000	2.2093	0.0002	0.1709	0.0002
Hexacosanes_3*	0.0062	0.0000	2.1749	0.0001	0.1674	0.0002
Heptacosanes_3*	0.0061	0.0000	2.1879	0.0001	0.1677	0.0002
Octacosanes_3*	0.0056	0.0000	2.0772	0.0001	0.1586	0.0002
Nonacosanes_3*	0.0050	0.0000	1.8915	0.0001	0.1439	0.0001
Triacontanes*	0.0000	0.0000	0.0000	0.0000	0.0000	0.0000
C31+_2*	0.0887	0.0001	46.5652	0.0032	3.4189	0.0034
H2O	799.7391	0.9981	14407.5306	0.9840	988.5049	0.9800
NC30*	0.0051	0.0000	2.3333	0.0002	0.1738	0.0002
n-Nonane	0.0938	0.0001	12.0289	0.0008	1.1436	0.0011
n-Decane	0.0901	0.0001	12.8176	0.0009	1.1978	0.0012
NC31-35*	0.0000	0.0000	0.0000	0.0000	0.0000	0.0000
TexaTherm	0.0000	0.0000	0.0000	0.0000	0.0000	0.0000
NC31-35_1*	0.0000	0.0000	0.0000	0.0000	0.0000	0.0000
CO	0.0000	0.0000	0.0000	0.0000	0.0000	0.0000
TEGlycol	0.0000	0.0000	0.0000	0.0000	0.0000	0.0000
SO2	0.0000	0.0000	0.0000	0.0000	0.0000	0.0000
C10+ (SS1H)*	0.0000	0.0000	0.0000	0.0000	0.0000	0.0000
464H C7+*	0.0000	0.0000	0.0000	0.0000	0.0000	0.0000
474Y c7+*	0.0000	0.0000	0.0000	0.0000	0.0000	0.0000
Total	801.2824	1.0000	14641.2309	1.0000	1008.6803	1.0000

Licensed to: EXXONMOBIL TECHNICAL COM
* Specified by user.

Material Stream: WiO2 (continued)

Fluid Package: Peng Robinson
Property Package: Peng-Robinson

COMPOSITION

Vapour Phase

Phase Fraction 7.603e-006

COMPONENTS	MOLAR FLOW (lbmole/hr)	MOLE FRACTION	MASS FLOW (lb/hr)	MASS FRACTION	LIQUID VOLUME FLOW (barrel/day)	LIQUID VOLUME FRACTION
Oxygen	0.0000	0.0000	0.0000	0.0000	0.0000	0.0000
H2S	0.0000	0.0000	0.0000	0.0000	0.0000	0.0000
Nitrogen	0.0000	0.0000	0.0000	0.0000	0.0000	0.0000
CO2	0.0000	0.0020	0.0005	0.0019	0.0000	0.0012
Methane	0.0000	0.0012	0.0001	0.0004	0.0000	0.0007
Ethane	0.0017	0.2763	0.0506	0.1803	0.0097	0.2591
Propane	0.0023	0.3769	0.1012	0.3606	0.0137	0.3639
i-Butane	0.0003	0.0559	0.0198	0.0705	0.0024	0.0641
n-Butane	0.0009	0.1432	0.0507	0.1807	0.0060	0.1584
22-Mpropane	0.0000	0.0012	0.0005	0.0018	0.0001	0.0016
i-Pentane	0.0002	0.0307	0.0135	0.0481	0.0015	0.0395
n-Pentane	0.0002	0.0304	0.0134	0.0477	0.0015	0.0387
22-Mbutane	0.0000	0.0002	0.0001	0.0003	0.0000	0.0003
Cyclopentane	0.0000	0.0000	0.0000	0.0000	0.0000	0.0000
23-Mbutane	0.0000	0.0021	0.0011	0.0039	0.0001	0.0030
2-Mpentane	0.0000	0.0051	0.0027	0.0096	0.0003	0.0075
3-Mpentane	0.0000	0.0028	0.0015	0.0052	0.0001	0.0040
n-Hexane	0.0000	0.0059	0.0031	0.0111	0.0003	0.0085
Hexanes*	0.0000	0.0000	0.0000	0.0000	0.0000	0.0000
Mcyclopentan	0.0000	0.0048	0.0024	0.0087	0.0002	0.0059
Benzene	0.0000	0.0050	0.0024	0.0084	0.0002	0.0049
Cyclohexane	0.0001	0.0090	0.0046	0.0164	0.0004	0.0107
2-Mhexane	0.0000	0.0009	0.0005	0.0019	0.0001	0.0014
3-Mhexane	0.0000	0.0008	0.0005	0.0017	0.0000	0.0013
224-Mpentane	0.0000	0.0000	0.0000	0.0000	0.0000	0.0000
n-Heptane	0.0000	0.0028	0.0017	0.0060	0.0002	0.0045
Heptanes*	0.0000	0.0000	0.0000	0.0000	0.0000	0.0000
Mcyclohexane	0.0000	0.0048	0.0029	0.0102	0.0003	0.0068
Toluene	0.0000	0.0024	0.0013	0.0047	0.0001	0.0028
n-Octane	0.0000	0.0016	0.0011	0.0039	0.0001	0.0028
Octanes*	0.0000	0.0000	0.0000	0.0000	0.0000	0.0000
E-Benzene	0.0000	0.0000	0.0000	0.0001	0.0000	0.0001
m-Xylene	0.0000	0.0002	0.0001	0.0004	0.0000	0.0002
o-Xylene	0.0000	0.0001	0.0001	0.0002	0.0000	0.0001
p-Xylene	0.0000	0.0002	0.0001	0.0004	0.0000	0.0002
Nonanes*	0.0000	0.0000	0.0000	0.0000	0.0000	0.0000
Decanes*	0.0000	0.0000	0.0000	0.0000	0.0000	0.0000
Undecanes_3*	0.0000	0.0001	0.0001	0.0002	0.0000	0.0001
Dodecanes_3*	0.0000	0.0000	0.0000	0.0001	0.0000	0.0000
Triadecanes_3*	0.0000	0.0000	0.0000	0.0000	0.0000	0.0000
Tetradecanes_3*	0.0000	0.0000	0.0000	0.0000	0.0000	0.0000
Pentadecanes_3*	0.0000	0.0000	0.0000	0.0000	0.0000	0.0000
Hexadecanes_3*	0.0000	0.0000	0.0000	0.0000	0.0000	0.0000
Heptadecanes_3*	0.0000	0.0000	0.0000	0.0000	0.0000	0.0000
Octadecanes_3*	0.0000	0.0000	0.0000	0.0000	0.0000	0.0000
Nonadecanes_3*	0.0000	0.0000	0.0000	0.0000	0.0000	0.0000
eicosanes_3*	0.0000	0.0000	0.0000	0.0000	0.0000	0.0000
Heneicosanes_3*	0.0000	0.0000	0.0000	0.0000	0.0000	0.0000

Licensed to: EXXONMOBIL TECHNICAL COM
* Specified by user.

Material Stream: WiO2 (continued)

Fluid Package: Peng Robinson
Property Package: Peng-Robinson

COMPOSITION

Vapour Phase (continued)

Phase Fraction 7.603e-006

COMPONENTS	MOLAR FLOW (lbmole/hr)	MOLE FRACTION	MASS FLOW (lb/hr)	MASS FRACTION	LIQUID VOLUME FLOW (barrel/day)	LIQUID VOLUME FRACTION
Dodocosanes_3*	0.0000	0.0000	0.0000	0.0000	0.0000	0.0000
Triacosanes_3*	0.0000	0.0000	0.0000	0.0000	0.0000	0.0000
Tetracosanes_3*	0.0000	0.0000	0.0000	0.0000	0.0000	0.0000
Pentacosanes_3*	0.0000	0.0000	0.0000	0.0000	0.0000	0.0000
Hexacosanes_3*	0.0000	0.0000	0.0000	0.0000	0.0000	0.0000
Heptacosanes_3*	0.0000	0.0000	0.0000	0.0000	0.0000	0.0000
Octacosanes_3*	0.0000	0.0000	0.0000	0.0000	0.0000	0.0000
Nonacosanes_3*	0.0000	0.0000	0.0000	0.0000	0.0000	0.0000
Triacontanes*	0.0000	0.0000	0.0000	0.0000	0.0000	0.0000
C31+_2*	0.0000	0.0000	0.0000	0.0000	0.0000	0.0000
H2O	0.0002	0.0331	0.0036	0.0129	0.0002	0.0066
NC30*	0.0000	0.0000	0.0000	0.0000	0.0000	0.0000
n-Nonane	0.0000	0.0005	0.0004	0.0013	0.0000	0.0009
n-Decane	0.0000	0.0001	0.0001	0.0005	0.0000	0.0003
NC31-35*	0.0000	0.0000	0.0000	0.0000	0.0000	0.0000
TexaTherm	0.0000	0.0000	0.0000	0.0000	0.0000	0.0000
NC31-35_1*	0.0000	0.0000	0.0000	0.0000	0.0000	0.0000
CO	0.0000	0.0000	0.0000	0.0000	0.0000	0.0000
TEGlycol	0.0000	0.0000	0.0000	0.0000	0.0000	0.0000
SO2	0.0000	0.0000	0.0000	0.0000	0.0000	0.0000
C10+ (SS1H)*	0.0000	0.0000	0.0000	0.0000	0.0000	0.0000
464H C7+*	0.0000	0.0000	0.0000	0.0000	0.0000	0.0000
474Y c7+*	0.0000	0.0000	0.0000	0.0000	0.0000	0.0000
Total	0.0061	1.0000	0.2808	1.0000	0.0376	1.0000

Liquid Phase

Phase Fraction 1.919e-003

COMPONENTS	MOLAR FLOW (lbmole/hr)	MOLE FRACTION	MASS FLOW (lb/hr)	MASS FRACTION	LIQUID VOLUME FLOW (barrel/day)	LIQUID VOLUME FRACTION
Oxygen	0.0000	0.0000	0.0000	0.0000	0.0000	0.0000
H2S	0.0000	0.0000	0.0000	0.0000	0.0000	0.0000
Nitrogen	0.0000	0.0000	0.0000	0.0000	0.0000	0.0000
CO2	0.0000	0.0000	0.0020	0.0000	0.0002	0.0000
Methane	0.0000	0.0000	0.0001	0.0000	0.0000	0.0000
Ethane	0.0114	0.0074	0.3427	0.0015	0.0660	0.0033
Propane	0.0563	0.0366	2.4836	0.0106	0.3356	0.0167
i-Butane	0.0220	0.0143	1.2803	0.0055	0.1560	0.0077
n-Butane	0.0793	0.0516	4.6115	0.0198	0.5414	0.0269
22-Mpropane	0.0009	0.0006	0.0653	0.0003	0.0075	0.0004
i-Pentane	0.0441	0.0287	3.1807	0.0136	0.3493	0.0173
n-Pentane	0.0583	0.0379	4.2047	0.0180	0.4572	0.0227
22-Mbutane	0.0006	0.0004	0.0543	0.0002	0.0057	0.0003
Cyclopentane	0.0000	0.0000	0.0000	0.0000	0.0000	0.0000
23-Mbutane	0.0087	0.0056	0.7473	0.0032	0.0769	0.0038
2-Mpentane	0.0237	0.0154	2.0445	0.0088	0.2132	0.0106
3-Mpentane	0.0144	0.0094	1.2401	0.0053	0.1272	0.0063
n-Hexane	0.0381	0.0248	3.2803	0.0141	0.3390	0.0168
Hexanes*	0.0000	0.0000	0.0000	0.0000	0.0000	0.0000
Mcyclopentan	0.0307	0.0199	2.5810	0.0111	0.2350	0.0117

Licensed to: EXXONMOBIL TECHNICAL COM
* Specified by user.

Material Stream: WiO2 (continued)

Fluid Package: Peng Robinson
Property Package: Peng-Robinson

COMPOSITION

Liquid Phase (continued)

Phase Fraction 1.919e-003

COMPONENTS	MOLAR FLOW (lbmole/hr)	MOLE FRACTION	MASS FLOW (lb/hr)	MASS FRACTION	LIQUID VOLUME FLOW (barrel/day)	LIQUID VOLUME FRACTION
Benzene	0.0316	0.0205	2.4676	0.0106	0.1915	0.0095
Cyclohexane	0.0714	0.0464	6.0060	0.0257	0.5260	0.0261
2-Mhexane	0.0135	0.0088	1.3550	0.0058	0.1361	0.0068
3-Mhexane	0.0123	0.0080	1.2284	0.0053	0.1219	0.0061
224-Mpentane	0.0000	0.0000	0.0000	0.0000	0.0000	0.0000
n-Heptane	0.0574	0.0373	5.7483	0.0246	0.5731	0.0285
Heptanes*	0.0000	0.0000	0.0000	0.0000	0.0000	0.0000
Mcyclohexane	0.0856	0.0557	8.4031	0.0360	0.7449	0.0370
Toluene	0.0526	0.0342	4.8453	0.0208	0.3813	0.0189
n-Octane	0.1047	0.0681	11.9633	0.0513	1.1613	0.0577
Octanes*	0.0000	0.0000	0.0000	0.0000	0.0000	0.0000
E-Benzene	0.0029	0.0019	0.3046	0.0013	0.0240	0.0012
m-Xylene	0.0131	0.0085	1.3886	0.0059	0.1097	0.0054
o-Xylene	0.0073	0.0048	0.7795	0.0033	0.0604	0.0030
p-Xylene	0.0131	0.0085	1.3886	0.0059	0.1100	0.0055
Nonanes*	0.0000	0.0000	0.0000	0.0000	0.0000	0.0000
Decanes*	0.0000	0.0000	0.0000	0.0000	0.0000	0.0000
Undecanes_3*	0.0649	0.0422	9.5462	0.0409	0.8254	0.0410
Dodecanes_3*	0.0460	0.0299	7.4007	0.0317	0.6310	0.0313
Triadecanes_3*	0.0491	0.0319	8.5842	0.0368	0.7230	0.0359
Tetradecanes_3*	0.0412	0.0268	7.8253	0.0335	0.6516	0.0324
Pentadecanes_3*	0.0362	0.0236	7.4674	0.0320	0.6152	0.0306
Hexadecanes_3*	0.0258	0.0168	5.7188	0.0245	0.4667	0.0232
Heptadecanes_3*	0.0216	0.0140	5.1181	0.0219	0.4142	0.0206
Octadecanes_3*	0.0204	0.0132	5.1107	0.0219	0.4106	0.0204
Nonadecanes_3*	0.0190	0.0123	4.9899	0.0214	0.3985	0.0198
eicosanes_3*	0.0125	0.0081	3.4275	0.0147	0.2722	0.0135
Heneicosanes_3*	0.0125	0.0081	3.6269	0.0155	0.2860	0.0142
Dodocosanes_3*	0.0101	0.0065	3.0172	0.0129	0.2369	0.0118
Triacosanes_3*	0.0089	0.0058	2.7914	0.0120	0.2180	0.0108
Tetracosanes_3*	0.0077	0.0050	2.4839	0.0106	0.1930	0.0096
Pentacosanes_3*	0.0066	0.0043	2.2093	0.0095	0.1709	0.0085
Hexacosanes_3*	0.0062	0.0041	2.1749	0.0093	0.1674	0.0083
Heptacosanes_3*	0.0061	0.0040	2.1879	0.0094	0.1677	0.0083
Octacosanes_3*	0.0056	0.0036	2.0772	0.0089	0.1586	0.0079
Nonacosanes_3*	0.0050	0.0032	1.8915	0.0081	0.1439	0.0071
Triacontanes*	0.0000	0.0000	0.0000	0.0000	0.0000	0.0000
C31+_2*	0.0887	0.0577	46.5652	0.1995	3.4189	0.1698
H2O	0.0008	0.0005	0.0141	0.0001	0.0010	0.0000
NC30*	0.0051	0.0033	2.3333	0.0100	0.1738	0.0086
n-Nonane	0.0938	0.0610	12.0285	0.0515	1.1435	0.0568
n-Decane	0.0901	0.0586	12.8175	0.0549	1.1978	0.0595
NC31-35*	0.0000	0.0000	0.0000	0.0000	0.0000	0.0000
TexaTherm	0.0000	0.0000	0.0000	0.0000	0.0000	0.0000
NC31-35_1*	0.0000	0.0000	0.0000	0.0000	0.0000	0.0000
CO	0.0000	0.0000	0.0000	0.0000	0.0000	0.0000
TEGlycol	0.0000	0.0000	0.0000	0.0000	0.0000	0.0000
SO2	0.0000	0.0000	0.0000	0.0000	0.0000	0.0000

Licensed to: EXXONMOBIL TECHNICAL COM
* Specified by user.

Material Stream: WiO2 (continued)

Fluid Package: Peng Robinson
Property Package: Peng-Robinson

COMPOSITION

Liquid Phase (continued)

Phase Fraction 1.919e-003

COMPONENTS	MOLAR FLOW (lbmole/hr)	MOLE FRACTION	MASS FLOW (lb/hr)	MASS FRACTION	LIQUID VOLUME FLOW (barrel/day)	LIQUID VOLUME FRACTION
C10+ (SS1H)*	0.0000	0.0000	0.0000	0.0000	0.0000	0.0000
464H C7+*	0.0000	0.0000	0.0000	0.0000	0.0000	0.0000
474Y c7+*	0.0000	0.0000	0.0000	0.0000	0.0000	0.0000
Total	1.5374	1.0000	233.4045	1.0000	20.1363	1.0000

Aqueous Phase

Phase Fraction 0.9981

COMPONENTS	MOLAR FLOW (lbmole/hr)	MOLE FRACTION	MASS FLOW (lb/hr)	MASS FRACTION	LIQUID VOLUME FLOW (barrel/day)	LIQUID VOLUME FRACTION
Oxygen	0.0000	0.0000	0.0000	0.0000	0.0000	0.0000
H2S	0.0000	0.0000	0.0000	0.0000	0.0000	0.0000
Nitrogen	0.0000	0.0000	0.0000	0.0000	0.0000	0.0000
CO2	0.0007	0.0000	0.0328	0.0000	0.0027	0.0000
Methane	0.0000	0.0000	0.0000	0.0000	0.0000	0.0000
Ethane	0.0000	0.0000	0.0000	0.0000	0.0000	0.0000
Propane	0.0000	0.0000	0.0000	0.0000	0.0000	0.0000
i-Butane	0.0000	0.0000	0.0000	0.0000	0.0000	0.0000
n-Butane	0.0000	0.0000	0.0000	0.0000	0.0000	0.0000
22-Mpropane	0.0000	0.0000	0.0000	0.0000	0.0000	0.0000
i-Pentane	0.0000	0.0000	0.0000	0.0000	0.0000	0.0000
n-Pentane	0.0000	0.0000	0.0000	0.0000	0.0000	0.0000
22-Mbutane	0.0000	0.0000	0.0000	0.0000	0.0000	0.0000
Cyclopentane	0.0000	0.0000	0.0000	0.0000	0.0000	0.0000
23-Mbutane	0.0000	0.0000	0.0000	0.0000	0.0000	0.0000
2-Mpentane	0.0000	0.0000	0.0000	0.0000	0.0000	0.0000
3-Mpentane	0.0000	0.0000	0.0000	0.0000	0.0000	0.0000
n-Hexane	0.0000	0.0000	0.0000	0.0000	0.0000	0.0000
Hexanes*	0.0000	0.0000	0.0000	0.0000	0.0000	0.0000
Mcyclopentan	0.0000	0.0000	0.0000	0.0000	0.0000	0.0000
Benzene	0.0000	0.0000	0.0000	0.0000	0.0000	0.0000
Cyclohexane	0.0000	0.0000	0.0000	0.0000	0.0000	0.0000
2-Mhexane	0.0000	0.0000	0.0000	0.0000	0.0000	0.0000
3-Mhexane	0.0000	0.0000	0.0000	0.0000	0.0000	0.0000
224-Mpentane	0.0000	0.0000	0.0000	0.0000	0.0000	0.0000
n-Heptane	0.0000	0.0000	0.0000	0.0000	0.0000	0.0000
Heptanes*	0.0000	0.0000	0.0000	0.0000	0.0000	0.0000
Mcyclohexane	0.0000	0.0000	0.0000	0.0000	0.0000	0.0000
Toluene	0.0000	0.0000	0.0000	0.0000	0.0000	0.0000
n-Octane	0.0000	0.0000	0.0000	0.0000	0.0000	0.0000
Octanes*	0.0000	0.0000	0.0000	0.0000	0.0000	0.0000
E-Benzene	0.0000	0.0000	0.0000	0.0000	0.0000	0.0000
m-Xylene	0.0000	0.0000	0.0000	0.0000	0.0000	0.0000
o-Xylene	0.0000	0.0000	0.0000	0.0000	0.0000	0.0000
p-Xylene	0.0000	0.0000	0.0000	0.0000	0.0000	0.0000
Nonanes*	0.0000	0.0000	0.0000	0.0000	0.0000	0.0000
Decanes*	0.0000	0.0000	0.0000	0.0000	0.0000	0.0000
Undecanes_3*	0.0000	0.0000	0.0000	0.0000	0.0000	0.0000
Dodecanes_3*	0.0000	0.0000	0.0000	0.0000	0.0000	0.0000
Triadecanes_3*	0.0000	0.0000	0.0000	0.0000	0.0000	0.0000

Licensed to: EXXONMOBIL TECHNICAL COM
* Specified by user.

Material Stream: WiO2 (continued)

Fluid Package: Peng Robinson
Property Package: Peng-Robinson

COMPOSITION

Aqueous Phase (continued)

Phase Fraction 0.9981

COMPONENTS	MOLAR FLOW (lbmole/hr)	MOLE FRACTION	MASS FLOW (lb/hr)	MASS FRACTION	LIQUID VOLUME FLOW (barrel/day)	LIQUID VOLUME FRACTION
Tetradecanes_3*	0.0000	0.0000	0.0000	0.0000	0.0000	0.0000
Pentadecanes_3*	0.0000	0.0000	0.0000	0.0000	0.0000	0.0000
Hexadecanes_3*	0.0000	0.0000	0.0000	0.0000	0.0000	0.0000
Heptadecanes_3*	0.0000	0.0000	0.0000	0.0000	0.0000	0.0000
Octadecanes_3*	0.0000	0.0000	0.0000	0.0000	0.0000	0.0000
Nonadecanes_3*	0.0000	0.0000	0.0000	0.0000	0.0000	0.0000
eicosanes_3*	0.0000	0.0000	0.0000	0.0000	0.0000	0.0000
Heneicosanes_3*	0.0000	0.0000	0.0000	0.0000	0.0000	0.0000
Dodocosanes_3*	0.0000	0.0000	0.0000	0.0000	0.0000	0.0000
Triacosanes_3*	0.0000	0.0000	0.0000	0.0000	0.0000	0.0000
Tetracosanes_3*	0.0000	0.0000	0.0000	0.0000	0.0000	0.0000
Pentacosanes_3*	0.0000	0.0000	0.0000	0.0000	0.0000	0.0000
Hexacosanes_3*	0.0000	0.0000	0.0000	0.0000	0.0000	0.0000
Heptacosanes_3*	0.0000	0.0000	0.0000	0.0000	0.0000	0.0000
Octacosanes_3*	0.0000	0.0000	0.0000	0.0000	0.0000	0.0000
Nonacosanes_3*	0.0000	0.0000	0.0000	0.0000	0.0000	0.0000
Triacontanes*	0.0000	0.0000	0.0000	0.0000	0.0000	0.0000
C31+_2*	0.0000	0.0000	0.0000	0.0000	0.0000	0.0000
H2O	799.7381	1.0000	14407.5129	1.0000	988.5037	1.0000
NC30*	0.0000	0.0000	0.0000	0.0000	0.0000	0.0000
n-Nonane	0.0000	0.0000	0.0000	0.0000	0.0000	0.0000
n-Decane	0.0000	0.0000	0.0000	0.0000	0.0000	0.0000
NC31-35*	0.0000	0.0000	0.0000	0.0000	0.0000	0.0000
TexaTherm	0.0000	0.0000	0.0000	0.0000	0.0000	0.0000
NC31-35_1*	0.0000	0.0000	0.0000	0.0000	0.0000	0.0000
CO	0.0000	0.0000	0.0000	0.0000	0.0000	0.0000
TEGlycol	0.0000	0.0000	0.0000	0.0000	0.0000	0.0000
SO2	0.0000	0.0000	0.0000	0.0000	0.0000	0.0000
C10+ (SS1H)*	0.0000	0.0000	0.0000	0.0000	0.0000	0.0000
464H C7+*	0.0000	0.0000	0.0000	0.0000	0.0000	0.0000
474Y c7+*	0.0000	0.0000	0.0000	0.0000	0.0000	0.0000
Total	799.7389	1.0000	14407.5457	1.0000	988.5064	1.0000

Licensed to: EXXONMOBIL TECHNICAL COM
* Specified by user.

XTO ENERGY INC.
Cowboy CDP
PROCESS SIMULATION COMPONENTS

PROCESS SIMULATION COMPONENTS - STABILIZER OVERHEAD GAS

HYSYS PROCESS STREAM NAME:	Oil OVHD Gas
HYSYS COMPONENTS	
Component	Mole Frac
Oxygen	0.000
H2S	0.000
Nitrogen	0.000
CO2	0.001
Methane	0.000
Ethane	0.146
Propane	0.629
i-Butane	0.058
n-Butane	0.100
22-Mpropane	0.001
i-Pentane	0.015
n-Pentane	0.015
22-Mbutane	0.000
Cyclopentane	0.000
23-Mbutane	0.001
2-Mpentane	0.003
3-Mpentane	0.001
n-Hexane	0.003
Hexanes*	0.000
Mcyclopentan	0.002
Benzene	0.002
Cyclohexane	0.005
2-Mhexane	0.000
3-Mhexane	0.000
224-Mpentane	0.000
n-Heptane	0.002
Heptanes*	0.000
Mcyclohexane	0.003
Toluene	0.001
n-Octane	0.001
Octanes*	0.000
E-Benzene	0.000
m-Xylene	0.000
o-Xylene	0.000
p-Xylene	0.000
Nonanes*	0.000
Decanes*	0.000
Undecanes_3*	0.000
Dodecanes_3*	0.000
Triadecanes_3*	0.000
Tetradecanes_3*	0.000
Pentadecanes_3*	0.000
Hexadecanes_3*	0.000
Heptadecanes_3*	0.000
Octadecanes_3*	0.000
Nonadecanes_3*	0.000
eicosanes_3*	0.000
Heneicosanes_3*	0.000
Dodocosanes_3*	0.000
Triacosanes_3*	0.000
Tetracosanes_3*	0.000
Pentacosanes_3*	0.000
Hexacosanes_3*	0.000
Heptacosanes_3*	0.000
Octacosanes_3*	0.000
Nonacosanes_3*	0.000
Triacontanes*	0.000
C31+_2*	0.000
H2O	0.009
NC30*	0.000
n-Nonane	0.000
n-Decane	0.000
NC31-35*	0.000
TexaTherm	0.000
NC31-35_1*	0.000
CO	0.000
TOTALS	100.000

PROMAX PROCESS STREAM NAME:	Process Purge Gas Flaring	
PROMAX COMPONENTS		
Component	Mole Frac	WT%
Water	0.0088	0.34
Hydrogen Sulfide	0.0000	0.00
Nitrogen	0.0000	0.00
Carbon Dioxide	0.0005	0.05
Methane	0.0002	0.01
Ethane	0.1464	9.55
Propane	0.6292	60.21
Iso-butane	0.0584	7.37
N-butane	0.1000	12.61
Iso-pentane	0.0154	2.41
N-pentane	0.0151	2.36
Cyclopentanes	0.0000	0.00
Other Hexanes	0.0057	1.07
n-Hexane	0.0030	0.56
Methylcyclopentane	0.0024	0.44
Benzene	0.0025	0.42
Cyclohexane	0.0045	0.82
2,2,4 Trimethylpentane	0.0000	0.00
Other Heptanes	0.0009	0.20
Methylcyclohexane	0.0025	0.53
n-Heptane	0.0015	0.33
Toluene	0.0013	0.26
Octanes	0.0010	0.25
Ethylbenzene	0.0000	0.00
M&P-Xylene	0.0002	0.05
Nonanes	0.0003	0.08
Decanes	0.0001	0.03
Undecanes	0.0001	0.06
Total	1.000	

Characteristics of Undecanes Plus	
Specific Gravity	0.8661
Molecular Weight (lb/lbmol)	262.912
VOC WT%	90.05
HAP WT%	2.066

EXXONMOBIL TECHNICAL COM Bedford, MA USA	Case Name:	Cowboy CDP CSH V6.4 winter-conservative.hsc
	Unit Set:	CSH 5b1
	Date/Time:	Tue Mar 10 09:18:10 2020

Material Stream: Oil OVHD gas

Fluid Package: Peng Robinson

Property Package: Peng-Robinson

CONDITIONS

	Overall	Vapour Phase
Vapour / Phase Fraction	1.0000	1.0000
Temperature: (F)	104.2	104.2
Pressure: (psig)	31.00	31.00
Molar Flow (MMSCFD)	2.822	2.822
Mass Flow (lb/hr)	1.428e+004	1.428e+004
Std Ideal Liq Vol Flow (barrel/day)	1911	1911
Molar Enthalpy (Btu/lbmole)	-4.624e+004	-4.624e+004
Molar Entropy (Btu/lbmole-F)	39.11	39.11
Heat Flow (Btu/hr)	-1.433e+007	-1.433e+007
Liq Vol Flow @Std Cond (barrel/day)	1857 *	1857

PROPERTIES

	Overall	Vapour Phase
Molecular Weight	46.07	46.07
Molar Density (lbmole/ft3)	7.948e-003	7.948e-003
Mass Density (lb/ft3)	0.3661	0.3661
Act. Volume Flow (barrel/day)	1.667e+005	1.667e+005
Mass Enthalpy (Btu/lb)	-1004	-1004
Mass Entropy (Btu/lb-F)	0.8489	0.8489
Heat Capacity (Btu/lbmole-F)	19.70	19.70
Mass Heat Capacity (Btu/lb-F)	0.4277	0.4277
LHV Molar Basis (Std) (Btu/SCF)	---	---
LHV Mass Basis (Std) (Btu/lb)	---	---
Phase Fraction [Vol. Basis]	1.000	1.000
Phase Fraction [Mass Basis]	1.000	1.000
Partial Pressure of CO2 (psig)	-14.67	---
Cost Based on Flow (Cost/s)	0.0000	0.0000
Act. Gas Flow (ACFM)	649.8	649.8
Avg. Liq. Density (lbmole/ft3)	0.6933	0.6933
Specific Heat (Btu/lbmole-F)	19.70	19.70
Std. Gas Flow (MMSCFD)	2.817	2.817
Std. Ideal Liq. Mass Density (lb/ft3)	31.94	31.94
Act. Liq. Flow (barrel/day)	---	---
Z Factor	0.9501	0.9501
Watson K	14.69	14.69
User Property	---	---
Cp/(Cp - R)	1.112	1.112
Cp/Cv	1.137	1.137
Heat of Vap. (Btu/lbmole)	1.009e+004	---
Kinematic Viscosity (cSt)	1.482	1.482
Liq. Mass Density (Std. Cond) (lb/ft3)	32.85	32.85
Liq. Vol. Flow (Std. Cond) (barrel/day)	1857	1857
Liquid Fraction	0.0000	0.0000
Molar Volume (ft3/lbmole)	125.8	125.8
Mass Heat of Vap. (Btu/lb)	219.0	---
Phase Fraction [Molar Basis]	1.0000	1.0000
Surface Tension (dyne/cm)	---	---
Thermal Conductivity (Btu/hr-ft-F)	1.113e-002	1.113e-002
Viscosity (cP)	8.692e-003	8.692e-003
Cv (Semi-Ideal) (Btu/lbmole-F)	17.71	17.71
Mass Cv (Semi-Ideal) (Btu/lb-F)	0.3846	0.3846

Licensed to: EXXONMOBIL TECHNICAL COM

* Specified by user.

Material Stream: Oil OVHD gas (continued)

Fluid Package: Peng Robinson
Property Package: Peng-Robinson

PROPERTIES

		Overall	Vapour Phase			
Cv	(Btu/lbmole-F)	17.33	17.33			
Mass Cv	(Btu/lb-F)	0.3761	0.3761			
Cv (Ent. Method)	(Btu/lbmole-F)	---	---			
Mass Cv (Ent. Method)	(Btu/lb-F)	---	---			
Cp/Cv (Ent. Method)		---	---			
Liq. Vol. Flow - Sum(Std. Cond)	(barrel/day)	1857	1857			
Partial Pressure of H2S	(psig)	-14.70	---			
Reid VP at 37.8 C	(psig)	182.2	182.2			
True VP at 37.8 C	(psig)	206.2	206.2			
Viscosity Index		---	---			
HHV Molar Basis (Std)	(Btu/SCF)	---	---			
HHV Mass Basis (Std)	(Btu/lb)	---	---			
CO2 Loading		---	---			
CO2 Apparent Mole Conc.	(lbmole/ft3)	---	---			
CO2 Apparent Wt. Conc.	(lbmol/lb)	---	---			
Phase Fraction [Act. Vol. Basis]		1.000	1.000			
Mass Exergy	(Btu/lb)	25.64	---			
Ideal Gas Cp/Cv		1.115	1.115			
Ideal Gas Cp	(Btu/lbmole-F)	19.27	19.27			
Mass Ideal Gas Cp	(Btu/lb-F)	0.4182	0.4182			
Bubble Point Pressure	(psig)	216.9	---			

COMPOSITION

Overall Phase

Vapour Fraction 1.0000

COMPONENTS	MOLAR FLOW (lbmole/hr)	MOLE FRACTION	MASS FLOW (lb/hr)	MASS FRACTION	LIQUID VOLUME FLOW (barrel/day)	LIQUID VOLUME FRACTION
Oxygen	0.0000	0.0000	0.0000	0.0000	0.0000	0.0000
H2S	0.0000	0.0000	0.0000	0.0000	0.0000	0.0000
Nitrogen	0.0000	0.0000	0.0002	0.0000	0.0000	0.0000
CO2	0.1573	0.0005	6.9244	0.0005	0.5745	0.0003
Methane	0.0578	0.0002	0.9272	0.0001	0.2121	0.0001
Ethane	45.3764	0.1464	1364.4779	0.0956	262.6740	0.1375
Propane	194.9733	0.6292	8597.8273	0.6023	1161.9044	0.6081
i-Butane	18.0985	0.0584	1051.9690	0.0737	128.1760	0.0671
n-Butane	31.0001	0.1000	1801.8696	0.1262	211.5448	0.1107
22-Mpropane	0.2057	0.0007	14.8396	0.0010	1.7060	0.0009
i-Pentane	4.7755	0.0154	344.5606	0.0241	37.8428	0.0198
n-Pentane	4.6790	0.0151	337.5973	0.0236	36.7079	0.0192
22-Mbutane	0.0282	0.0001	2.4304	0.0002	0.2550	0.0001
Cyclopentane	0.0000	0.0000	0.0000	0.0000	0.0000	0.0000
23-Mbutane	0.3180	0.0010	27.4045	0.0019	2.8210	0.0015
2-Mpentane	0.7929	0.0026	68.3295	0.0048	7.1266	0.0037
3-Mpentane	0.4296	0.0014	37.0256	0.0026	3.7970	0.0020
n-Hexane	0.9302	0.0030	80.1621	0.0056	8.2830	0.0043
Hexanes*	0.0000	0.0000	0.0000	0.0000	0.0000	0.0000
Mcyclopentan	0.7333	0.0024	61.7138	0.0043	5.6188	0.0029
Benzene	0.7678	0.0025	59.9759	0.0042	4.6551	0.0024
Cyclohexane	1.3959	0.0045	117.4780	0.0082	10.2887	0.0054
2-Mhexane	0.1473	0.0005	14.7571	0.0010	1.4826	0.0008
3-Mhexane	0.1294	0.0004	12.9663	0.0009	1.2863	0.0007

Licensed to: EXXONMOBIL TECHNICAL COM
* Specified by user.

Material Stream: Oil OVHD gas (continued)

Fluid Package: Peng Robinson
Property Package: Peng-Robinson

COMPOSITION

Overall Phase (continued)

Vapour Fraction 1.0000

COMPONENTS	MOLAR FLOW (lbmole/hr)	MOLE FRACTION	MASS FLOW (lb/hr)	MASS FRACTION	LIQUID VOLUME FLOW (barrel/day)	LIQUID VOLUME FRACTION
224-Mpentane	0.0000	0.0000	0.0000	0.0000	0.0000	0.0000
n-Heptane	0.4716	0.0015	47.2543	0.0033	4.7110	0.0025
Heptanes*	0.0000	0.0000	0.0000	0.0000	0.0000	0.0000
Mcyclohexane	0.7830	0.0025	76.8827	0.0054	6.8153	0.0036
Toluene	0.3981	0.0013	36.6840	0.0026	2.8870	0.0015
n-Octane	0.2955	0.0010	33.7544	0.0024	3.2766	0.0017
Octanes*	0.0000	0.0000	0.0000	0.0000	0.0000	0.0000
E-Benzene	0.0075	0.0000	0.7940	0.0001	0.0625	0.0000
m-Xylene	0.0295	0.0001	3.1317	0.0002	0.2474	0.0001
o-Xylene	0.0155	0.0001	1.6498	0.0001	0.1279	0.0001
p-Xylene	0.0296	0.0001	3.1454	0.0002	0.2492	0.0001
Nonanes*	0.0000	0.0000	0.0000	0.0000	0.0000	0.0000
Decanes*	0.0000	0.0000	0.0000	0.0000	0.0000	0.0000
Undecanes_3*	0.0155	0.0001	2.2802	0.0002	0.1972	0.0001
Dodecanes_3*	0.0043	0.0000	0.6852	0.0000	0.0584	0.0000
Triadecanes_3*	0.0017	0.0000	0.3010	0.0000	0.0254	0.0000
Tetradecanes_3*	0.0005	0.0000	0.0996	0.0000	0.0083	0.0000
Pentadecanes_3*	0.0002	0.0000	0.0329	0.0000	0.0027	0.0000
Hexadecanes_3*	0.0000	0.0000	0.0091	0.0000	0.0007	0.0000
Heptadecanes_3*	0.0000	0.0000	0.0031	0.0000	0.0002	0.0000
Octadecanes_3*	0.0000	0.0000	0.0013	0.0000	0.0001	0.0000
Nonadecanes_3*	0.0000	0.0000	0.0006	0.0000	0.0000	0.0000
eicosanes_3*	0.0000	0.0000	0.0002	0.0000	0.0000	0.0000
Heneicosanes_3*	0.0000	0.0000	0.0001	0.0000	0.0000	0.0000
Dodocosanes_3*	0.0000	0.0000	0.0000	0.0000	0.0000	0.0000
Triacosanes_3*	0.0000	0.0000	0.0000	0.0000	0.0000	0.0000
Tetracosanes_3*	0.0000	0.0000	0.0000	0.0000	0.0000	0.0000
Pentacosanes_3*	0.0000	0.0000	0.0000	0.0000	0.0000	0.0000
Hexacosanes_3*	0.0000	0.0000	0.0000	0.0000	0.0000	0.0000
Heptacosanes_3*	0.0000	0.0000	0.0000	0.0000	0.0000	0.0000
Octacosanes_3*	0.0000	0.0000	0.0000	0.0000	0.0000	0.0000
Nonacosanes_3*	0.0000	0.0000	0.0000	0.0000	0.0000	0.0000
Triacontanes*	0.0000	0.0000	0.0000	0.0000	0.0000	0.0000
C31+_2*	0.0000	0.0000	0.0000	0.0000	0.0000	0.0000
H2O	2.7215	0.0088	49.0280	0.0034	3.3638	0.0018
NC30*	0.0000	0.0000	0.0000	0.0000	0.0000	0.0000
n-Nonane	0.0946	0.0003	12.1345	0.0008	1.1536	0.0006
n-Decane	0.0336	0.0001	4.7809	0.0003	0.4468	0.0002
NC31-35*	0.0000	0.0000	0.0000	0.0000	0.0000	0.0000
TexaTherm	0.0000	0.0000	0.0000	0.0000	0.0000	0.0000
NC31-35_1*	0.0000	0.0000	0.0000	0.0000	0.0000	0.0000
CO	0.0000	0.0000	0.0000	0.0000	0.0000	0.0000
TEGlycol	0.0000	0.0000	0.0000	0.0000	0.0000	0.0000
SO2	0.0000	0.0000	0.0000	0.0000	0.0000	0.0000
C10+ (SS1H)*	0.0000	0.0000	0.0000	0.0000	0.0000	0.0000
464H C7+*	0.0000	0.0000	0.0000	0.0000	0.0000	0.0000
474Y c7+*	0.0000	0.0000	0.0000	0.0000	0.0000	0.0000
Total	309.8984	1.0000	14275.8892	1.0000	1910.5909	1.0000

Licensed to: EXXONMOBIL TECHNICAL COM
* Specified by user.

Material Stream: Oil OVHD gas (continued)

Fluid Package: Peng Robinson
Property Package: Peng-Robinson

COMPOSITION

Vapour Phase

Phase Fraction 1.000

COMPONENTS	MOLAR FLOW (lbmole/hr)	MOLE FRACTION	MASS FLOW (lb/hr)	MASS FRACTION	LIQUID VOLUME FLOW (barrel/day)	LIQUID VOLUME FRACTION
Oxygen	0.0000	0.0000	0.0000	0.0000	0.0000	0.0000
H2S	0.0000	0.0000	0.0000	0.0000	0.0000	0.0000
Nitrogen	0.0000	0.0000	0.0002	0.0000	0.0000	0.0000
CO2	0.1573	0.0005	6.9244	0.0005	0.5745	0.0003
Methane	0.0578	0.0002	0.9272	0.0001	0.2121	0.0001
Ethane	45.3764	0.1464	1364.4779	0.0956	262.6740	0.1375
Propane	194.9733	0.6292	8597.8273	0.6023	1161.9044	0.6081
i-Butane	18.0985	0.0584	1051.9690	0.0737	128.1760	0.0671
n-Butane	31.0001	0.1000	1801.8696	0.1262	211.5448	0.1107
22-Mpropane	0.2057	0.0007	14.8396	0.0010	1.7060	0.0009
i-Pentane	4.7755	0.0154	344.5606	0.0241	37.8428	0.0198
n-Pentane	4.6790	0.0151	337.5973	0.0236	36.7079	0.0192
22-Mbutane	0.0282	0.0001	2.4304	0.0002	0.2550	0.0001
Cyclopentane	0.0000	0.0000	0.0000	0.0000	0.0000	0.0000
23-Mbutane	0.3180	0.0010	27.4045	0.0019	2.8210	0.0015
2-Mpentane	0.7929	0.0026	68.3295	0.0048	7.1266	0.0037
3-Mpentane	0.4296	0.0014	37.0256	0.0026	3.7970	0.0020
n-Hexane	0.9302	0.0030	80.1621	0.0056	8.2830	0.0043
Hexanes*	0.0000	0.0000	0.0000	0.0000	0.0000	0.0000
Mcyclopentan	0.7333	0.0024	61.7138	0.0043	5.6188	0.0029
Benzene	0.7678	0.0025	59.9759	0.0042	4.6551	0.0024
Cyclohexane	1.3959	0.0045	117.4780	0.0082	10.2887	0.0054
2-Mhexane	0.1473	0.0005	14.7571	0.0010	1.4826	0.0008
3-Mhexane	0.1294	0.0004	12.9663	0.0009	1.2863	0.0007
224-Mpentane	0.0000	0.0000	0.0000	0.0000	0.0000	0.0000
n-Heptane	0.4716	0.0015	47.2543	0.0033	4.7110	0.0025
Heptanes*	0.0000	0.0000	0.0000	0.0000	0.0000	0.0000
Mcyclohexane	0.7830	0.0025	76.8827	0.0054	6.8153	0.0036
Toluene	0.3981	0.0013	36.6840	0.0026	2.8870	0.0015
n-Octane	0.2955	0.0010	33.7544	0.0024	3.2766	0.0017
Octanes*	0.0000	0.0000	0.0000	0.0000	0.0000	0.0000
E-Benzene	0.0075	0.0000	0.7940	0.0001	0.0625	0.0000
m-Xylene	0.0295	0.0001	3.1317	0.0002	0.2474	0.0001
o-Xylene	0.0155	0.0001	1.6498	0.0001	0.1279	0.0001
p-Xylene	0.0296	0.0001	3.1454	0.0002	0.2492	0.0001
Nonanes*	0.0000	0.0000	0.0000	0.0000	0.0000	0.0000
Decanes*	0.0000	0.0000	0.0000	0.0000	0.0000	0.0000
Undecanes_3*	0.0155	0.0001	2.2802	0.0002	0.1972	0.0001
Dodecanes_3*	0.0043	0.0000	0.6852	0.0000	0.0584	0.0000
Triadecanes_3*	0.0017	0.0000	0.3010	0.0000	0.0254	0.0000
Tetradecanes_3*	0.0005	0.0000	0.0996	0.0000	0.0083	0.0000
Pentadecanes_3*	0.0002	0.0000	0.0329	0.0000	0.0027	0.0000
Hexadecanes_3*	0.0000	0.0000	0.0091	0.0000	0.0007	0.0000
Heptadecanes_3*	0.0000	0.0000	0.0031	0.0000	0.0002	0.0000
Octadecanes_3*	0.0000	0.0000	0.0013	0.0000	0.0001	0.0000
Nonadecanes_3*	0.0000	0.0000	0.0006	0.0000	0.0000	0.0000
eicosanes_3*	0.0000	0.0000	0.0002	0.0000	0.0000	0.0000
Heneicosanes_3*	0.0000	0.0000	0.0001	0.0000	0.0000	0.0000

Licensed to: EXXONMOBIL TECHNICAL COM
* Specified by user.

Material Stream: Oil OVHD gas (continued)

Fluid Package: Peng Robinson
Property Package: Peng-Robinson

COMPOSITION

Vapour Phase (continued)

Phase Fraction 1.000

COMPONENTS	MOLAR FLOW (lbmole/hr)	MOLE FRACTION	MASS FLOW (lb/hr)	MASS FRACTION	LIQUID VOLUME FLOW (barrel/day)	LIQUID VOLUME FRACTION
Dodocosanes_3*	0.0000	0.0000	0.0000	0.0000	0.0000	0.0000
Triacosanes_3*	0.0000	0.0000	0.0000	0.0000	0.0000	0.0000
Tetracosanes_3*	0.0000	0.0000	0.0000	0.0000	0.0000	0.0000
Pentacosanes_3*	0.0000	0.0000	0.0000	0.0000	0.0000	0.0000
Hexacosanes_3*	0.0000	0.0000	0.0000	0.0000	0.0000	0.0000
Heptacosanes_3*	0.0000	0.0000	0.0000	0.0000	0.0000	0.0000
Octacosanes_3*	0.0000	0.0000	0.0000	0.0000	0.0000	0.0000
Nonacosanes_3*	0.0000	0.0000	0.0000	0.0000	0.0000	0.0000
Triacontanes*	0.0000	0.0000	0.0000	0.0000	0.0000	0.0000
C31+_2*	0.0000	0.0000	0.0000	0.0000	0.0000	0.0000
H2O	2.7215	0.0088	49.0280	0.0034	3.3638	0.0018
NC30*	0.0000	0.0000	0.0000	0.0000	0.0000	0.0000
n-Nonane	0.0946	0.0003	12.1345	0.0008	1.1536	0.0006
n-Decane	0.0336	0.0001	4.7809	0.0003	0.4468	0.0002
NC31-35*	0.0000	0.0000	0.0000	0.0000	0.0000	0.0000
TexaTherm	0.0000	0.0000	0.0000	0.0000	0.0000	0.0000
NC31-35_1*	0.0000	0.0000	0.0000	0.0000	0.0000	0.0000
CO	0.0000	0.0000	0.0000	0.0000	0.0000	0.0000
TEGlycol	0.0000	0.0000	0.0000	0.0000	0.0000	0.0000
SO2	0.0000	0.0000	0.0000	0.0000	0.0000	0.0000
C10+ (SS1H)*	0.0000	0.0000	0.0000	0.0000	0.0000	0.0000
464H C7+*	0.0000	0.0000	0.0000	0.0000	0.0000	0.0000
474Y c7+*	0.0000	0.0000	0.0000	0.0000	0.0000	0.0000
Total	309.8984	1.0000	14275.8892	1.0000	1910.5909	1.0000

Licensed to: EXXONMOBIL TECHNICAL COM
* Specified by user.

XTO ENERGY INC.
Cowboy CDP
PROCESS SIMULATION COMPONENTS

PROCESS SIMULATION COMPONENTS - RESIDUE GAS - ETHANE REJECTION

HYSYS PROCESS STREAM NAME:	Residue Gas
HYSYS COMPONENTS	
Component	**Mole Frac**
Oxygen	0.000
H2S	0.000
Nitrogen	0.018
CO2	0.000
Methane	0.802
Ethane	0.167
Propane	0.013
i-Butane	0.000
n-Butane	0.000
22-Mpropane	0.000
i-Pentane	0.000
n-Pentane	0.000
22-Mbutane	0.000
Cyclopentane	0.000
23-Mbutane	0.000
2-Mpentane	0.000
3-Mpentane	0.000
n-Hexane	0.000
Hexanes*	0.000
Mcyclopentan	0.000
Benzene	0.000
Cyclohexane	0.000
2-Mhexane	0.000
3-Mhexane	0.000
224-Mpentane	0.000
n-Heptane	0.000
Heptanes*	0.000
Mcyclohexane	0.000
Toluene	0.000
n-Octane	0.000
Octanes*	0.000
E-Benzene	0.000
m-Xylene	0.000
o-Xylene	0.000
p-Xylene	0.000
Nonanes*	0.000
Decanes*	0.000
Undecanes_3*	0.000
Dodecanes_3*	0.000
Triadecanes_3*	0.000
Tetradecanes_3*	0.000
Pentadecanes_3*	0.000
Hexadecanes_3*	0.000
Heptadecanes_3*	0.000
Octadecanes_3*	0.000
Nonadecanes_3*	0.000
eicosanes_3*	0.000
Heneicosanes_3*	0.000
Dodocosanes_3*	0.000
Triacosanes_3*	0.000
Tetracosanes_3*	0.000
Pentacosanes_3*	0.000
Hexacosanes_3*	0.000
Heptacosanes_3*	0.000
Octacosanes_3*	0.000
Nonacosanes_3*	0.000
Triacontanes*	0.000
C31+_2*	0.000
H2O	0.000
NC30*	0.000
n-Nonane	0.000
n-Decane	0.000
NC31-35*	0.000
TexaTherm	0.000
NC31-35_1*	0.000
CO	0.000
TOTALS	1.000

PROMAX PROCESS STREAM NAME:	Pilot Fuel, TO Assist Fuel, LP Header Purge Gas, HP Header Purge gas
PROMAX COMPONENTS	
Component	**Mole Frac**
Water	0.0000
Hydrogen Sulfide	0.0000
Nitrogen	0.0175
Carbon Dioxide	0.0000
Methane	0.8018
Ethane	0.1674
Propane	0.0132
Iso-butane	0.0000
N-butane	0.0000
Iso-pentane	0.0000
N-pentane	0.0000
Cyclopentanes	0.0000
Other Hexanes	0.0000
n-Hexane	0.0000
Methylcyclopentane	0.0000
Benzene	0.0000
Cyclohexane	0.0000
2,2,4 Trimethylpentane	0.0000
Other Heptanes	0.0000
Methylcyclohexane	0.0000
n-Heptane	0.0000
Toluene	0.0000
Octanes	0.0000
Ethylbenzene	0.0000
M&P-Xylene	0.0000
Nonanes	0.0000
Decanes	0.0000
Undecanes	0.0000
Total	1.000

Characteristics of Undecanes Plus	
Specific Gravity	0.8661
Molecular Weight (lb/lbmol)	262.912

EXXONMOBIL TECHNICAL COM Bedford, MA USA	Case Name:	Cowboy CDP CSH V6.4 winter-conservative.hsc
	Unit Set:	CSH 5b1
	Date/Time:	Tue Mar 10 09:20:25 2020

Material Stream: Residue gas1

Fluid Package: Peng Robinson

Property Package: Peng-Robinson

CONDITIONS

	Overall	Vapour Phase
Vapour / Phase Fraction	1.0000	1.0000
Temperature: (F)	113.2	113.2
Pressure: (psig)	301.0	301.0
Molar Flow (MMSCFD)	203.5	203.5
Mass Flow (lb/hr)	4.239e+005	4.239e+005
Std Ideal Liq Vol Flow (barrel/day)	9.007e+004	9.007e+004
Molar Enthalpy (Btu/lbmole)	-3.237e+004	-3.237e+004
Molar Entropy (Btu/lbmole-F)	39.57	39.57
Heat Flow (Btu/hr)	-7.232e+008	-7.232e+008
Liq Vol Flow @Std Cond (barrel/day)	3.605e+007 *	3.605e+007

PROPERTIES

	Overall	Vapour Phase
Molecular Weight	18.97	18.97
Molar Density (lbmole/ft3)	5.418e-002	5.418e-002
Mass Density (lb/ft3)	1.028	1.028
Act. Volume Flow (barrel/day)	1.763e+006	1.763e+006
Mass Enthalpy (Btu/lb)	-1706	-1706
Mass Entropy (Btu/lb-F)	2.085	2.085
Heat Capacity (Btu/lbmole-F)	10.23	10.23
Mass Heat Capacity (Btu/lb-F)	0.5392	0.5392
LHV Molar Basis (Std) (Btu/SCF)	1031	1031
LHV Mass Basis (Std) (Btu/lb)	2.062e+004	2.062e+004
Phase Fraction [Vol. Basis]	1.000	1.000
Phase Fraction [Mass Basis]	1.000	1.000
Partial Pressure of CO2 (psig)	-14.70	---
Cost Based on Flow (Cost/s)	0.0000	0.0000
Act. Gas Flow (ACFM)	6873	6873
Avg. Liq. Density (lbmole/ft3)	1.060	1.060
Specific Heat (Btu/lbmole-F)	10.23	10.23
Std. Gas Flow (MMSCFD)	203.1	203.1
Std. Ideal Liq. Mass Density (lb/ft3)	20.12	20.12
Act. Liq. Flow (barrel/day)	---	---
Z Factor	0.9478	0.9478
Watson K	18.92	18.92
User Property	---	---
Cp/(Cp - R)	1.241	1.241
Cp/Cv	1.328	1.328
Heat of Vap. (Btu/lbmole)	3833	---
Kinematic Viscosity (cSt)	0.7417	0.7417
Liq. Mass Density (Std. Cond) (lb/ft3)	5.027e-002	5.027e-002
Liq. Vol. Flow (Std. Cond) (barrel/day)	3.605e+007	3.605e+007
Liquid Fraction	0.0000	0.0000
Molar Volume (ft3/lbmole)	18.46	18.46
Mass Heat of Vap. (Btu/lb)	202.0	---
Phase Fraction [Molar Basis]	1.0000	1.0000
Surface Tension (dyne/cm)	---	---
Thermal Conductivity (Btu/hr-ft-F)	2.044e-002	2.044e-002
Viscosity (cP)	1.221e-002	1.221e-002
Cv (Semi-Ideal) (Btu/lbmole-F)	8.244	8.244
Mass Cv (Semi-Ideal) (Btu/lb-F)	0.4345	0.4345

Licensed to: EXXONMOBIL TECHNICAL COM

* Specified by user.

Material Stream: Residue gas1 (continued)

Fluid Package: Peng Robinson
Property Package: Peng-Robinson

PROPERTIES

		Overall	Vapour Phase			
Cv	(Btu/lbmole-F)	7.702	7.702			
Mass Cv	(Btu/lb-F)	0.4059	0.4059			
Cv (Ent. Method)	(Btu/lbmole-F)	---	---			
Mass Cv (Ent. Method)	(Btu/lb-F)	---	---			
Cp/Cv (Ent. Method)		---	---			
Liq. Vol. Flow - Sum(Std. Cond)	(barrel/day)	3.605e+007	3.605e+007			
Partial Pressure of H2S	(psig)	-14.70	---			
Reid VP at 37.8 C	(psig)	---	---			
True VP at 37.8 C	(psig)	---	---			
Viscosity Index		-28.07	---			
HHV Molar Basis (Std)	(Btu/SCF)	1131	1131			
HHV Mass Basis (Std)	(Btu/lb)	2.262e+004	2.262e+004			
CO2 Loading		---	---			
CO2 Apparent Mole Conc.	(lbmole/ft3)	---	---			
CO2 Apparent Wt. Conc.	(lbmol/lb)	---	---			
Phase Fraction [Act. Vol. Basis]		1.000	1.000			
Mass Exergy	(Btu/lb)	169.4	---			
Ideal Gas Cp/Cv		1.260	1.260			
Ideal Gas Cp	(Btu/lbmole-F)	9.617	9.617			
Mass Ideal Gas Cp	(Btu/lb-F)	0.5069	0.5069			
Bubble Point Pressure	(psig)	---	---			

COMPOSITION

Overall Phase

Vapour Fraction 1.0000

COMPONENTS	MOLAR FLOW (lbmole/hr)	MOLE FRACTION	MASS FLOW (lb/hr)	MASS FRACTION	LIQUID VOLUME FLOW (barrel/day)	LIQUID VOLUME FRACTION
Oxygen	0.0000	0.0000	0.0000	0.0000	0.0000	0.0000
H2S	0.0000	0.0000	0.0000	0.0000	0.0000	0.0000
Nitrogen	391.3446	0.0175	10962.8501	0.0259	930.8950	0.0103
CO2	0.0133	0.0000	0.5833	0.0000	0.0484	0.0000
Methane	17912.5128	0.8018	287371.6517	0.6779	65722.5730	0.7296
Ethane	3740.5554	0.1674	112479.3029	0.2653	21653.2572	0.2404
Propane	295.9642	0.0132	13051.2704	0.0308	1763.7396	0.0196
i-Butane	0.4689	0.0000	27.2538	0.0001	3.3207	0.0000
n-Butane	0.1110	0.0000	6.4517	0.0000	0.7574	0.0000
22-Mpropane	0.0000	0.0000	0.0000	0.0000	0.0000	0.0000
i-Pentane	0.0000	0.0000	0.0034	0.0000	0.0004	0.0000
n-Pentane	0.0000	0.0000	0.0004	0.0000	0.0000	0.0000
22-Mbutane	0.0000	0.0000	0.0000	0.0000	0.0000	0.0000
Cyclopentane	0.0000	0.0000	0.0000	0.0000	0.0000	0.0000
23-Mbutane	0.0000	0.0000	0.0000	0.0000	0.0000	0.0000
2-Mpentane	0.0000	0.0000	0.0000	0.0000	0.0000	0.0000
3-Mpentane	0.0000	0.0000	0.0000	0.0000	0.0000	0.0000
n-Hexane	0.0000	0.0000	0.0000	0.0000	0.0000	0.0000
Hexanes*	0.0000	0.0000	0.0000	0.0000	0.0000	0.0000
Mcyclopentan	0.0000	0.0000	0.0000	0.0000	0.0000	0.0000
Benzene	0.0000	0.0000	0.0000	0.0000	0.0000	0.0000
Cyclohexane	0.0000	0.0000	0.0000	0.0000	0.0000	0.0000
2-Mhexane	0.0000	0.0000	0.0000	0.0000	0.0000	0.0000
3-Mhexane	0.0000	0.0000	0.0000	0.0000	0.0000	0.0000

Licensed to: EXXONMOBIL TECHNICAL COM
* Specified by user.

Material Stream: Residue gas1 (continued)

Fluid Package: Peng Robinson
Property Package: Peng-Robinson

COMPOSITION

Overall Phase (continued)

Vapour Fraction 1.0000

COMPONENTS	MOLAR FLOW (lbmole/hr)	MOLE FRACTION	MASS FLOW (lb/hr)	MASS FRACTION	LIQUID VOLUME FLOW (barrel/day)	LIQUID VOLUME FRACTION
224-Mpentane	0.0000	0.0000	0.0000	0.0000	0.0000	0.0000
n-Heptane	0.0000	0.0000	0.0000	0.0000	0.0000	0.0000
Heptanes*	0.0000	0.0000	0.0000	0.0000	0.0000	0.0000
Mcyclohexane	0.0000	0.0000	0.0000	0.0000	0.0000	0.0000
Toluene	0.0000	0.0000	0.0000	0.0000	0.0000	0.0000
n-Octane	0.0000	0.0000	0.0000	0.0000	0.0000	0.0000
Octanes*	0.0000	0.0000	0.0000	0.0000	0.0000	0.0000
E-Benzene	0.0000	0.0000	0.0000	0.0000	0.0000	0.0000
m-Xylene	0.0000	0.0000	0.0000	0.0000	0.0000	0.0000
o-Xylene	0.0000	0.0000	0.0000	0.0000	0.0000	0.0000
p-Xylene	0.0000	0.0000	0.0000	0.0000	0.0000	0.0000
Nonanes*	0.0000	0.0000	0.0000	0.0000	0.0000	0.0000
Decanes*	0.0000	0.0000	0.0000	0.0000	0.0000	0.0000
Undecanes_3*	0.0000	0.0000	0.0000	0.0000	0.0000	0.0000
Dodecanes_3*	0.0000	0.0000	0.0000	0.0000	0.0000	0.0000
Triadecanes_3*	0.0000	0.0000	0.0000	0.0000	0.0000	0.0000
Tetradecanes_3*	0.0000	0.0000	0.0000	0.0000	0.0000	0.0000
Pentadecanes_3*	0.0000	0.0000	0.0000	0.0000	0.0000	0.0000
Hexadecanes_3*	0.0000	0.0000	0.0000	0.0000	0.0000	0.0000
Heptadecanes_3*	0.0000	0.0000	0.0000	0.0000	0.0000	0.0000
Octadecanes_3*	0.0000	0.0000	0.0000	0.0000	0.0000	0.0000
Nonadecanes_3*	0.0000	0.0000	0.0000	0.0000	0.0000	0.0000
eicosanes_3*	0.0000	0.0000	0.0000	0.0000	0.0000	0.0000
Heneicosanes_3*	0.0000	0.0000	0.0000	0.0000	0.0000	0.0000
Dodocosanes_3*	0.0000	0.0000	0.0000	0.0000	0.0000	0.0000
Triacosanes_3*	0.0000	0.0000	0.0000	0.0000	0.0000	0.0000
Tetracosanes_3*	0.0000	0.0000	0.0000	0.0000	0.0000	0.0000
Pentacosanes_3*	0.0000	0.0000	0.0000	0.0000	0.0000	0.0000
Hexacosanes_3*	0.0000	0.0000	0.0000	0.0000	0.0000	0.0000
Heptacosanes_3*	0.0000	0.0000	0.0000	0.0000	0.0000	0.0000
Octacosanes_3*	0.0000	0.0000	0.0000	0.0000	0.0000	0.0000
Nonacosanes_3*	0.0000	0.0000	0.0000	0.0000	0.0000	0.0000
Triacontanes*	0.0000	0.0000	0.0000	0.0000	0.0000	0.0000
C31+_2*	0.0000	0.0000	0.0000	0.0000	0.0000	0.0000
H2O	0.0000	0.0000	0.0000	0.0000	0.0000	0.0000
NC30*	0.0000	0.0000	0.0000	0.0000	0.0000	0.0000
n-Nonane	0.0000	0.0000	0.0000	0.0000	0.0000	0.0000
n-Decane	0.0000	0.0000	0.0000	0.0000	0.0000	0.0000
NC31-35*	0.0000	0.0000	0.0000	0.0000	0.0000	0.0000
TexaTherm	0.0000	0.0000	0.0000	0.0000	0.0000	0.0000
NC31-35_1*	0.0000	0.0000	0.0000	0.0000	0.0000	0.0000
CO	0.0000	0.0000	0.0000	0.0000	0.0000	0.0000
TEGlycol	0.0000	0.0000	0.0000	0.0000	0.0000	0.0000
SO2	0.0000	0.0000	0.0000	0.0000	0.0000	0.0000
C10+ (SS1H)*	0.0000	0.0000	0.0000	0.0000	0.0000	0.0000
464H C7+*	0.0000	0.0000	0.0000	0.0000	0.0000	0.0000
474Y c7+*	0.0000	0.0000	0.0000	0.0000	0.0000	0.0000
Total	22340.9702	1.0000	423899.3677	1.0000	90074.5918	1.0000

Licensed to: EXXONMOBIL TECHNICAL COM
* Specified by user.

Material Stream: Residue gas1 (continued)

Fluid Package: Peng Robinson
Property Package: Peng-Robinson

COMPOSITION

Vapour Phase

Phase Fraction 1.000

COMPONENTS	MOLAR FLOW (lbmole/hr)	MOLE FRACTION	MASS FLOW (lb/hr)	MASS FRACTION	LIQUID VOLUME FLOW (barrel/day)	LIQUID VOLUME FRACTION
Oxygen	0.0000	0.0000	0.0000	0.0000	0.0000	0.0000
H2S	0.0000	0.0000	0.0000	0.0000	0.0000	0.0000
Nitrogen	391.3446	0.0175	10962.8501	0.0259	930.8950	0.0103
CO2	0.0133	0.0000	0.5833	0.0000	0.0484	0.0000
Methane	17912.5128	0.8018	287371.6517	0.6779	65722.5730	0.7296
Ethane	3740.5554	0.1674	112479.3029	0.2653	21653.2572	0.2404
Propane	295.9642	0.0132	13051.2704	0.0308	1763.7396	0.0196
i-Butane	0.4689	0.0000	27.2538	0.0001	3.3207	0.0000
n-Butane	0.1110	0.0000	6.4517	0.0000	0.7574	0.0000
22-Mpropane	0.0000	0.0000	0.0000	0.0000	0.0000	0.0000
i-Pentane	0.0000	0.0000	0.0034	0.0000	0.0004	0.0000
n-Pentane	0.0000	0.0000	0.0004	0.0000	0.0000	0.0000
22-Mbutane	0.0000	0.0000	0.0000	0.0000	0.0000	0.0000
Cyclopentane	0.0000	0.0000	0.0000	0.0000	0.0000	0.0000
23-Mbutane	0.0000	0.0000	0.0000	0.0000	0.0000	0.0000
2-Mpentane	0.0000	0.0000	0.0000	0.0000	0.0000	0.0000
3-Mpentane	0.0000	0.0000	0.0000	0.0000	0.0000	0.0000
n-Hexane	0.0000	0.0000	0.0000	0.0000	0.0000	0.0000
Hexanes*	0.0000	0.0000	0.0000	0.0000	0.0000	0.0000
Mcyclopentan	0.0000	0.0000	0.0000	0.0000	0.0000	0.0000
Benzene	0.0000	0.0000	0.0000	0.0000	0.0000	0.0000
Cyclohexane	0.0000	0.0000	0.0000	0.0000	0.0000	0.0000
2-Mhexane	0.0000	0.0000	0.0000	0.0000	0.0000	0.0000
3-Mhexane	0.0000	0.0000	0.0000	0.0000	0.0000	0.0000
224-Mpentane	0.0000	0.0000	0.0000	0.0000	0.0000	0.0000
n-Heptane	0.0000	0.0000	0.0000	0.0000	0.0000	0.0000
Heptanes*	0.0000	0.0000	0.0000	0.0000	0.0000	0.0000
Mcyclohexane	0.0000	0.0000	0.0000	0.0000	0.0000	0.0000
Toluene	0.0000	0.0000	0.0000	0.0000	0.0000	0.0000
n-Octane	0.0000	0.0000	0.0000	0.0000	0.0000	0.0000
Octanes*	0.0000	0.0000	0.0000	0.0000	0.0000	0.0000
E-Benzene	0.0000	0.0000	0.0000	0.0000	0.0000	0.0000
m-Xylene	0.0000	0.0000	0.0000	0.0000	0.0000	0.0000
o-Xylene	0.0000	0.0000	0.0000	0.0000	0.0000	0.0000
p-Xylene	0.0000	0.0000	0.0000	0.0000	0.0000	0.0000
Nonanes*	0.0000	0.0000	0.0000	0.0000	0.0000	0.0000
Decanes*	0.0000	0.0000	0.0000	0.0000	0.0000	0.0000
Undecanes_3*	0.0000	0.0000	0.0000	0.0000	0.0000	0.0000
Dodecanes_3*	0.0000	0.0000	0.0000	0.0000	0.0000	0.0000
Triadecanes_3*	0.0000	0.0000	0.0000	0.0000	0.0000	0.0000
Tetradecanes_3*	0.0000	0.0000	0.0000	0.0000	0.0000	0.0000
Pentadecanes_3*	0.0000	0.0000	0.0000	0.0000	0.0000	0.0000
Hexadecanes_3*	0.0000	0.0000	0.0000	0.0000	0.0000	0.0000
Heptadecanes_3*	0.0000	0.0000	0.0000	0.0000	0.0000	0.0000
Octadecanes_3*	0.0000	0.0000	0.0000	0.0000	0.0000	0.0000
Nonadecanes_3*	0.0000	0.0000	0.0000	0.0000	0.0000	0.0000
eicosanes_3*	0.0000	0.0000	0.0000	0.0000	0.0000	0.0000
Heneicosanes_3*	0.0000	0.0000	0.0000	0.0000	0.0000	0.0000

Licensed to: EXXONMOBIL TECHNICAL COM
* Specified by user.

Material Stream: Residue gas1 (continued)

Fluid Package: Peng Robinson
Property Package: Peng-Robinson

COMPOSITION

Vapour Phase (continued)

Phase Fraction 1.000

COMPONENTS	MOLAR FLOW (lbmole/hr)	MOLE FRACTION	MASS FLOW (lb/hr)	MASS FRACTION	LIQUID VOLUME FLOW (barrel/day)	LIQUID VOLUME FRACTION
Dodocosanes_3*	0.0000	0.0000	0.0000	0.0000	0.0000	0.0000
Triacosanes_3*	0.0000	0.0000	0.0000	0.0000	0.0000	0.0000
Tetracosanes_3*	0.0000	0.0000	0.0000	0.0000	0.0000	0.0000
Pentacosanes_3*	0.0000	0.0000	0.0000	0.0000	0.0000	0.0000
Hexacosanes_3*	0.0000	0.0000	0.0000	0.0000	0.0000	0.0000
Heptacosanes_3*	0.0000	0.0000	0.0000	0.0000	0.0000	0.0000
Octacosanes_3*	0.0000	0.0000	0.0000	0.0000	0.0000	0.0000
Nonacosanes_3*	0.0000	0.0000	0.0000	0.0000	0.0000	0.0000
Triacontanes*	0.0000	0.0000	0.0000	0.0000	0.0000	0.0000
C31+_2*	0.0000	0.0000	0.0000	0.0000	0.0000	0.0000
H2O	0.0000	0.0000	0.0000	0.0000	0.0000	0.0000
NC30*	0.0000	0.0000	0.0000	0.0000	0.0000	0.0000
n-Nonane	0.0000	0.0000	0.0000	0.0000	0.0000	0.0000
n-Decane	0.0000	0.0000	0.0000	0.0000	0.0000	0.0000
NC31-35*	0.0000	0.0000	0.0000	0.0000	0.0000	0.0000
TexaTherm	0.0000	0.0000	0.0000	0.0000	0.0000	0.0000
NC31-35_1*	0.0000	0.0000	0.0000	0.0000	0.0000	0.0000
CO	0.0000	0.0000	0.0000	0.0000	0.0000	0.0000
TEGlycol	0.0000	0.0000	0.0000	0.0000	0.0000	0.0000
SO2	0.0000	0.0000	0.0000	0.0000	0.0000	0.0000
C10+ (SS1H)*	0.0000	0.0000	0.0000	0.0000	0.0000	0.0000
464H C7+*	0.0000	0.0000	0.0000	0.0000	0.0000	0.0000
474Y c7+*	0.0000	0.0000	0.0000	0.0000	0.0000	0.0000
Total	22340.9702	1.0000	423899.3677	1.0000	90074.5918	1.0000

Licensed to: EXXONMOBIL TECHNICAL COM
* Specified by user.

CDP
Plant Schematic

Client Name:	XTO ENERGY INC	Job: DELAWARE DEVELOPMENT
Location:	Cowboy CDP	
Flowsheet:	CDP	

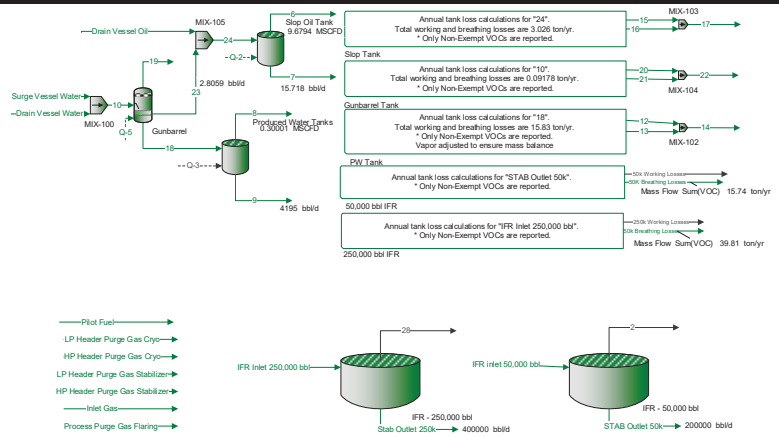

* User Specified Values
? Extrapolated or Approximate Values

ProMax 5.0.20259.0
Copyright © 2002-2020 BRE Group, Ltd.

Licensed to Esso Exploration, Inc.

Process Streams Report
All Streams
Tabulated by Total Phase

Client Name:	XTO ENERGY INC	Job: DELAWARE DEVELOPMENT
Location:	Cowboy CDP	
Flowsheet:	CDP	

Connections

	Drain Vessel Oil	Drain Vessel Water	HP Header Purge Gas Cryo	HP Header Purge Gas Stabilizer	IFR inlet 50,000 bbl
From Block	--	--	--	--	--
To Block	MIX-105	MIX-100	--	--	IFR - 50,000 bbl

Stream Composition

Mole Fraction	Drain Vessel Oil %	Drain Vessel Water %	HP Header Purge Gas Cryo %	HP Header Purge Gas Stabilizer %	IFR inlet 50,000 bbl %
Water	0.02971 *	99.9794 *	0.0149999 *	0.0149999 *	0.0150002 *
Hydrogen Sulfide	0 *	0 *	0 *	0 *	0 *
Nitrogen, Atomic	0.00069 *	10E-06 *	1.59198 *	1.59198 *	0 *
Carbon Dioxide	0.01589 *	0.00061 *	0.112999 *	0.112999 *	0.00100001 *
Methane	0.2153 *	4E-05 *	73.5163 *	73.5163 *	0 *
Ethane	2.31583 *	0.00046 *	14.7199 *	14.7199 *	0.255003 *
Propane	19.3744 *	0.00388 *	7.21593 *	7.21593 *	1.25201 *
Isobutane	5.8018 *	0.00116 *	0.723993 *	0.723993 *	1.21801 *
Butane	16.6133 *	0.00333 *	1.62298 *	1.62298 *	4.83005 *
Isopentane	5.80547 *	0.00116 *	0.207998 *	0.207998 *	3.25303 *
Pentane	7.29616 *	0.00146 *	0.191998 *	0.191998 *	4.66105 *
Cyclopentane	0 *	0 *	0 *	0 *	0 *
i-C6	4.1772 *	0.00084 *	0.0369996 *	0.0369996 *	3.62804 *
n-Hexane	3.13494 *	0.00063 *	0.0159998 *	0.0159998 *	2.84403 *
Methylcyclopentane	2.4458 *	0.00049 *	0.00899991 *	0.00899991 *	2.22902 *
Benzene	2.04093 *	0.00041 *	0.00199998 *	0.00199998 *	2.09702 *
Cyclohexane	4.88517 *	0.00098 *	0.00899991 *	0.00899991 *	4.91405 *
2,2,4-Trimethylpentane	0 *	0 *	0 *	0 *	0 *
i-C7	1.94914 *	0.00039 *	0.00299997 *	0.00299997 *	1.91602 *
Methylcyclohexane	5.03883 *	0.00101 *	0.00299997 *	0.00299997 *	5.78906 *
n-Heptane	3.07889 *	0.00062 *	0.00099999 *	0.00099999 *	3.84704 *
Toluene	2.80248 *	0.00056 *	0 *	0 *	3.45803 *
Octane	4.63735 *	0.00093 *	0.00099999 *	0.00099999 *	6.98707 *
Ethylbenzene	0.13415 *	3E-05 *	0 *	0 *	0.190002 *
m-Xylene	1.42718 *	0.00029 *	0 *	0 *	2.19602 *
Nonane	3.00359 *	0.0006 *	0 *	0 *	6.47506 *
Decane	1.91314 *	0.00038 *	0 *	0 *	5.86906 *
Undecanes Plus	1.86267 *	0.00037 *	0 *	0 *	32.0753 *

Mass Fraction	Drain Vessel Oil %	Drain Vessel Water %	HP Header Purge Gas Cryo %	HP Header Purge Gas Stabilizer %	IFR inlet 50,000 bbl %
Water	0.00696258 *	99.9131 *	0.0126271 *	0.0126271 *	0.00180123 *
Hydrogen Sulfide	0 *	0 *	0 *	0 *	0 *
Nitrogen, Atomic	0.000125722 *	7.76975E-06 *	1.04196 *	1.04196 *	0 *
Carbon Dioxide	0.00909697 *	0.00148918 *	0.232379 *	0.232379 *	0.000293348 *
Methane	0.0449305 *	3.55961E-05 *	55.1101 *	55.1101 *	0 *
Ethane	0.905843 *	0.00076727 *	20.6824 *	20.6824 *	0.0511089 *
Propane	11.1135 *	0.0094907 *	14.8684 *	14.8684 *	0.36799 *
Isobutane	4.38663 *	0.00374 *	1.96632 *	1.96632 *	0.471874 *
Butane	12.561 *	0.0107364 *	4.40792 *	4.40792 *	1.87122 *
Isopentane	5.4487 *	0.00464257 *	0.701238 *	0.701238 *	1.56441 *
Pentane	6.84778 *	0.00584323 *	0.647296 *	0.647296 *	2.24153 *
Cyclopentane	0 *	0 *	0 *	0 *	0 *
i-C6	4.68268 *	0.00401544 *	0.14899 *	0.14899 *	2.08395 *
n-Hexane	3.5143 *	0.00301158 *	0.0644282 *	0.0644282 *	1.63361 *
Methylcyclopentane	2.67763 *	0.00228755 *	0.0353931 *	0.0353931 *	1.2504 *
Benzene	2.07382 *	0.00177653 *	0.00729995 *	0.00729995 *	1.09182 *

Copyright © 2002-2020 BRE Group, Ltd.
Licensed to Esso Exploration, Inc.

Process Streams Report
All Streams
Tabulated by Total Phase

Client Name:	XTO ENERGY INC	Job: DELAWARE DEVELOPMENT
Location:	Cowboy CDP	
Flowsheet:	CDP	

Mass Fraction	Drain Vessel Oil %	Drain Vessel Water %	HP Header Purge Gas Cryo %	HP Header Purge Gas Stabilizer %	IFR inlet 50,000 bbl %
Cyclohexane	5.34822 *	0.0045751 *	0.0353931 *	0.0353931 *	2.75661 *
2,2,4-Trimethylpentane	0 *	0 *	0 *	0 *	0 *
i-C7	2.54065 *	0.00216776 *	0.0140466 *	0.0140466 *	1.2797 *
Methylcyclohexane	6.43585 *	0.00550101 *	0.013764 *	0.013764 *	3.7887 *
n-Heptane	4.01326 *	0.00344619 *	0.00468219 *	0.00468219 *	2.56942 *
Toluene	3.359 *	0.0028622 *	0 *	0 *	2.12375 *
Octane	6.89082 *	0.00589289 *	0.00533762 *	0.00533762 *	5.31988 *
Ethylbenzene	0.185267 *	0.000176674 *	0 *	0 *	0.134453 *
m-Xylene	1.971 *	0.00170785 *	0 *	0 *	1.554 *
Nonane	5.0112 *	0.00426871 *	0 *	0 *	5.53543 *
Decane	3.54097 *	0.00299919 *	0 *	0 *	5.56609 *
Undecanes Plus	6.43078 *	0.0054472 *	0 *	0 *	56.742 *

Mass Flow	Drain Vessel Oil lb/h	Drain Vessel Water lb/h	HP Header Purge Gas Cryo lb/h	HP Header Purge Gas Stabilizer lb/h	IFR inlet 50,000 bbl lb/h
Water	0.013378 *	2914.18 *	0.0155591 *	0.0113934 *	41.3361 *
Hydrogen Sulfide	0 *	0 *	0 *	0 *	0 *
Nitrogen, Atomic	0.000241563 *	0.000226622 *	1.2839 *	0.940158 *	0 *
Carbon Dioxide	0.017479 *	0.0434352 *	0.286338 *	0.209675 *	6.732 *
Methane	0.0863298 *	0.00103824 *	67.9066 *	49.7257 *	0 *
Ethane	1.74049 *	0.0223791 *	25.4848 *	18.6616 *	1172.89 *
Propane	21.3535 *	0.276817 *	18.3208 *	13.4157 *	8444.95 *
Isobutane	8.42851 *	0.109085 *	2.42289 *	1.7742 *	10829 *
Butane	24.1348 *	0.31315 *	5.43143 *	3.97725 *	42942.4 *
Isopentane	10.4692 *	0.135411 *	0.864064 *	0.632724 *	35901.3 *
Pentane	13.1574 *	0.170431 *	0.797597 *	0.584053 *	51440.5 *
Cyclopentane	0 *	0 *	0 *	0 *	0 *
i-C6	8.99734 *	0.117119 *	0.183585 *	0.134433 *	47824.2 *
n-Hexane	6.7524 *	0.0878394 *	0.0793883 *	0.0581333 *	37489.5 *
Methylcyclopentane	5.14482 *	0.0667213 *	0.0436113 *	0.0319351 *	28695.3 *
Benzene	3.98466 *	0.0518163 *	0.00899498 *	0.00658672 *	25056.1 *
Cyclohexane	10.2761 *	0.133443 *	0.0436113 *	0.0319351 *	63260.9 *
2,2,4-Trimethylpentane	0 *	0 *	0 *	0 *	0 *
i-C7	4.88163 *	0.0632275 *	0.0173082 *	0.0126742 *	29367.6 *
Methylcyclohexane	12.3659 *	0.160449 *	0.01696 *	0.0124192 *	86946.2 *
n-Heptane	7.7111 *	0.100516 *	0.00576939 *	0.00422472 *	58965.2 *
Toluene	6.454 *	0.0834823 *	0 *	0 *	48737.5 *
Octane	13.2401 *	0.171879 *	0.006577 *	0.00481611 *	122085 *
Ethylbenzene	0.355974 *	0.0051531 *	0 *	0 *	3085.55 *
m-Xylene	3.78709 *	0.0498133 *	0 *	0 *	35662.4 *
Nonane	9.62856 *	0.124506 *	0 *	0 *	127032 *
Decane	6.80365 *	0.0874779 *	0 *	0 *	127735 *
Undecanes Plus	12.3561 *	0.15888 *	0 *	0 *	1.30216E+06 *

Std Vapor Volumetric Flow	Drain Vessel Oil MMSCFD	Drain Vessel Water MMSCFD	HP Header Purge Gas Cryo MMSCFD	HP Header Purge Gas Stabilizer MMSCFD	IFR inlet 50,000 bbl MMSCFD
Water	6.76322E-06 *	1.47326 *	7.86592E-06 *	5.75994E-06 *	0.0208975 *
Hydrogen Sulfide	0 *	0 *	0 *	0 *	0 *
Nitrogen, Atomic	1.57072E-07 *	1.47357E-07 *	0.000834836 *	0.000611322 *	0 *
Carbon Dioxide	3.61722E-06 *	8.98877E-06 *	5.92566E-05 *	4.33916E-05 *	0.00139316 *
Methane	4.90111E-05 *	5.89428E-07 *	0.0385519 *	0.0282302 *	0 *
Ethane	0.000527178 *	6.77842E-06 *	0.00771909 *	0.00565242 *	0.355257 *
Propane	0.00441041 *	5.71745E-05 *	0.00378403 *	0.00277092 *	1.74424 *
Isobutane	0.00132073 *	1.70934E-05 *	0.000379662 *	0.000278013 *	1.69687 *
Butane	0.00378187 *	4.90698E-05 *	0.000851093 *	0.000623226 *	6.72898 *

* User Specified Values
? Extrapolated or Approximate Values

Copyright © 2002-2020 BRE Group, Ltd.
Licensed to Esso Exploration, Inc.

Process Streams Report
All Streams
Tabulated by Total Phase

Client Name:	XTO ENERGY INC	Job: DELAWARE DEVELOPMENT
Location:	Cowboy CDP	
Flowsheet:	CDP	

Std Vapor Volumetric Flow	Drain Vessel Oil MMSCFD	Drain Vessel Water MMSCFD	HP Header Purge Gas Cryo MMSCFD	HP Header Purge Gas Stabilizer MMSCFD	IFR inlet 50,000 bbl MMSCFD
Isopentane	0.00132156 *	1.70934E-05 *	0.000109074 *	7.98712E-05 *	4.53196 *
Pentane	0.00166091 *	2.15141E-05 *	0.000100684 *	7.37273E-05 *	6.49354 *
Cyclopentane	0 *	0 *	0 *	0 *	0 *
i-C6	0.000950903 *	1.2378E-05 *	1.94026E-05 *	1.42079E-05 *	5.0544 *
n-Hexane	0.000713641 *	9.28348E-06 *	8.39032E-06 *	6.14394E-06 *	3.96216 *
Methylcyclopentane	0.000556765 *	7.22049E-06 *	4.71955E-06 *	3.45597E-06 *	3.10536 *
Benzene	0.0004646 *	6.04163E-06 *	1.04879E-06 *	7.67992E-07 *	2.92146 *
Cyclohexane	0.00111207 *	1.4441E-05 *	4.71955E-06 *	3.45597E-06 *	6.84601 *
2,2,4-Trimethylpentane	0 *	0 *	0 *	0 *	0 *
i-C7	0.000443704 *	5.74692E-06 *	1.57318E-06 *	1.15199E-06 *	2.6693 *
Methylcyclohexane	0.00114705 *	1.4883E-05 *	1.57318E-06 *	1.15199E-06 *	8.06503 *
n-Heptane	0.000700882 *	9.13613E-06 *	5.24395E-07 *	3.83996E-07 *	5.3595 *
Toluene	0.00063796 *	8.25199E-06 *	0 *	0 *	4.81756 *
Octane	0.00105565 *	1.37042E-05 *	5.24395E-07 *	3.83996E-07 *	9.73404 *
Ethylbenzene	3.05381E-05 *	4.42071E-07 *	0 *	0 *	0.264701 *
m-Xylene	0.000324885 *	4.27335E-06 *	0 *	0 *	3.05939 *
Nonane	0.000683741 *	8.84141E-06 *	0 *	0 *	9.02074 *
Decane	0.000435509 *	5.59956E-06 *	0 *	0 *	8.17648 *
Undecanes Plus	0.00042402 *	5.4522E-06 *	0 *	0 *	44.6857 *

Stream Properties

Property	Units	Drain Vessel Oil	Drain Vessel Water	HP Header Purge Gas Cryo	HP Header Purge Gas Stabilizer	IFR inlet 50,000 bbl
Temperature	°F	75 *	100 *	65 *	65	90 *
Pressure	psig	30 *	30 *	50 *	50	0 *
Molecular Weight	lb/lbmol	76.8729	18.0272	21.4004	21.4004	150.026
Molar Flow	lbmol/h	2.49946	161.795	5.75782	4.21625	15296.5
Std Vapor Volumetric Flow	MMSCFD	0.0227641	1.47357	0.05244 *	0.0384 *	139.315
Std Liquid Volumetric Flow	sgpm	0.583333 *	5.83333 *	0.705485	0.516602	5833.33 *
Net Ideal Gas Heating Value	Btu/ft^3	3888.41	0.778807	1171.41	1171.41	7401.08
Gross Ideal Gas Heating Value	Btu/ft^3	4187.78	51.1384	1289.45	1289.45	7911.89

Remarks

Copyright © 2002-2020 BRE Group, Ltd.
Licensed to Esso Exploration, Inc.

Process Streams Report
All Streams
Tabulated by Total Phase

Client Name:	XTO ENERGY INC	Job: DELAWARE DEVELOPMENT
Location:	Cowboy CDP	
Flowsheet:	CDP	

Connections

	IFR Inlet 250,000 bbl	Inlet Gas	LP Header Purge Gas Cryo	LP Header Purge Gas Stabilizer	Pilot Fuel
From Block	--	--	--	--	--
To Block	IFR - 250,000 bbl	--	--	--	--

Stream Composition

Mole Fraction	IFR Inlet 250,000 bbl %	Inlet Gas %	LP Header Purge Gas Cryo %	LP Header Purge Gas Stabilizer %	Pilot Fuel %
Water	0.0150002 *	0.0149999 *	0.0149999 *	0.0149999 *	0.0149999 *
Hydrogen Sulfide	0 *	0 *	0 *	0 *	0 *
Nitrogen, Atomic	0 *	1.59198 *	1.59198 *	1.59198 *	1.59198 *
Carbon Dioxide	0.00100001 *	0.112999 *	0.112999 *	0.112999 *	0.112999 *
Methane	0 *	73.5163 *	73.5163 *	73.5163 *	73.5163 *
Ethane	0.255003 *	14.7199 *	14.7199 *	14.7199 *	14.7199 *
Propane	1.25201 *	7.21593 *	7.21593 *	7.21593 *	7.21593 *
Isobutane	1.21801 *	0.723993 *	0.723993 *	0.723993 *	0.723993 *
Butane	4.83005 *	1.62298 *	1.62298 *	1.62298 *	1.62298 *
Isopentane	3.25303 *	0.207998 *	0.207998 *	0.207998 *	0.207998 *
Pentane	4.66105 *	0.191998 *	0.191998 *	0.191998 *	0.191998 *
Cyclopentane	0 *	0 *	0 *	0 *	0 *
i-C6	3.62804 *	0.0369996 *	0.0369996 *	0.0369996 *	0.0369996 *
n-Hexane	2.84403 *	0.0159998 *	0.0159998 *	0.0159998 *	0.0159998 *
Methylcyclopentane	2.22902 *	0.00899991 *	0.00899991 *	0.00899991 *	0.00899991 *
Benzene	2.09702 *	0.00199998 *	0.00199998 *	0.00199998 *	0.00199998 *
Cyclohexane	4.91405 *	0.00899991 *	0.00899991 *	0.00899991 *	0.00899991 *
2,2,4-Trimethylpentane	0 *	0 *	0 *	0 *	0 *
i-C7	1.91602 *	0.00299997 *	0.00299997 *	0.00299997 *	0.00299997 *
Methylcyclohexane	5.78906 *	0.00299997 *	0.00299997 *	0.00299997 *	0.00299997 *
n-Heptane	3.84704 *	0.00099999 *	0.00099999 *	0.00099999 *	0.00099999 *
Toluene	3.45803 *	0 *	0 *	0 *	0 *
Octane	6.98707 *	0.00099999 *	0.00099999 *	0.00099999 *	0.00099999 *
Ethylbenzene	0.190002 *	0 *	0 *	0 *	0 *
m-Xylene	2.19602 *	0 *	0 *	0 *	0 *
Nonane	6.47506 *	0 *	0 *	0 *	0 *
Decane	5.86906 *	0 *	0 *	0 *	0 *
Undecanes Plus	32.0753 *	0 *	0 *	0 *	0 *

Mass Fraction	IFR Inlet 250,000 bbl %	Inlet Gas %	LP Header Purge Gas Cryo %	LP Header Purge Gas Stabilizer %	Pilot Fuel %
Water	0.00180123 *	0.0126271 *	0.0126271 *	0.0126271 *	0.0126271 *
Hydrogen Sulfide	0 *	0 *	0 *	0 *	0 *
Nitrogen, Atomic	0 *	1.04196 *	1.04196 *	1.04196 *	1.04196 *
Carbon Dioxide	0.000293348 *	0.232379 *	0.232379 *	0.232379 *	0.232379 *
Methane	0 *	55.1101 *	55.1101 *	55.1101 *	55.1101 *
Ethane	0.0511089 *	20.6824 *	20.6824 *	20.6824 *	20.6824 *
Propane	0.36799 *	14.8684 *	14.8684 *	14.8684 *	14.8684 *
Isobutane	0.471874 *	1.96632 *	1.96632 *	1.96632 *	1.96632 *
Butane	1.87122 *	4.40792 *	4.40792 *	4.40792 *	4.40792 *
Isopentane	1.56441 *	0.701238 *	0.701238 *	0.701238 *	0.701238 *
Pentane	2.24153 *	0.647296 *	0.647296 *	0.647296 *	0.647296 *
Cyclopentane	0 *	0 *	0 *	0 *	0 *
i-C6	2.08395 *	0.14899 *	0.14899 *	0.14899 *	0.14899 *
n-Hexane	1.63361 *	0.0644282 *	0.0644282 *	0.0644282 *	0.0644282 *
Methylcyclopentane	1.2504 *	0.0353931 *	0.0353931 *	0.0353931 *	0.0353931 *
Benzene	1.09182 *	0.00729995 *	0.00729995 *	0.00729995 *	0.00729995 *

Copyright © 2002-2020 BRE Group, Ltd.
Licensed to Esso Exploration, Inc.

Process Streams Report
All Streams
Tabulated by Total Phase

Client Name:	XTO ENERGY INC	Job: DELAWARE DEVELOPMENT
Location:	Cowboy CDP	
Flowsheet:	CDP	

Mass Fraction	IFR Inlet 250,000 bbl %	Inlet Gas %	LP Header Purge Gas Cryo %	LP Header Purge Gas Stabilizer %	Pilot Fuel %
Cyclohexane	2.75661 *	0.0353931 *	0.0353931 *	0.0353931 *	0.0353931 *
2,2,4-Trimethylpentane	0 *	0 *	0 *	0 *	0 *
i-C7	1.2797 *	0.0140466 *	0.0140466 *	0.0140466 *	0.0140466 *
Methylcyclohexane	3.7887 *	0.013764 *	0.013764 *	0.013764 *	0.013764 *
n-Heptane	2.56942 *	0.00468219 *	0.00468219 *	0.00468219 *	0.00468219 *
Toluene	2.12375 *	0 *	0 *	0 *	0 *
Octane	5.31988 *	0.00533762 *	0.00533762 *	0.00533762 *	0.00533762 *
Ethylbenzene	0.134453 *	0 *	0 *	0 *	0 *
m-Xylene	1.554 *	0 *	0 *	0 *	0 *
Nonane	5.53543 *	0 *	0 *	0 *	0 *
Decane	5.56609 *	0 *	0 *	0 *	0 *
Undecanes Plus	56.742 *	0 *	0 *	0 *	0 *

Mass Flow	IFR Inlet 250,000 bbl lb/h	Inlet Gas lb/h	LP Header Purge Gas Cryo lb/h	LP Header Purge Gas Stabilizer lb/h	Pilot Fuel lb/h
Water	82.6722 *	14.2418 *	0.0108238 *	0.00409451 *	0.00356045 *
Hydrogen Sulfide	0 *	0 *	0 *	0 *	0 *
Nitrogen, Atomic	0 *	1175.2 *	0.89315 *	0.337869 *	0.293799 *
Carbon Dioxide	13.464 *	262.094 *	0.199191 *	0.075352 *	0.0655235 *
Methane	0 *	62157.1 *	47.2394 *	17.8702 *	15.5393 *
Ethane	2345.78 *	23327 *	17.7285 *	6.70652 *	5.83176 *
Propane	16889.9 *	16769.7 *	12.7449 *	4.82128 *	4.19241 *
Isobutane	21657.9 *	2217.75 *	1.68549 *	0.637603 *	0.554438 *
Butane	85884.8 *	4971.56 *	3.77839 *	1.42932 *	1.24289 *
Isopentane	71802.6 *	790.905 *	0.601088 *	0.227385 *	0.197726 *
Pentane	102881 *	730.066 *	0.55485 *	0.209894 *	0.182517 *
Cyclopentane	0 *	0 *	0 *	0 *	0 *
i-C6	95648.4 *	168.042 *	0.127712 *	0.048312 *	0.0420104 *
n-Hexane	74979.1 *	72.6667 *	0.0552267 *	0.0208917 *	0.0181667 *
Methylcyclopentane	57390.6 *	39.9188 *	0.0303383 *	0.0114767 *	0.0099797 *
Benzene	50112.1 *	8.23339 *	0.00625738 *	0.0023671 *	0.00205835 *
Cyclohexane	126522 *	39.9188 *	0.0303383 *	0.0114767 *	0.0099797 *
2,2,4-Trimethylpentane	0 *	0 *	0 *	0 *	0 *
i-C7	58735.3 *	15.8427 *	0.0120405 *	0.00455478 *	0.00396068 *
Methylcyclohexane	173892 *	15.524 *	0.0117982 *	0.00446315 *	0.003881 *
n-Heptane	117930 *	5.2809 *	0.00401349 *	0.00151826 *	0.00132023 *
Toluene	97475 *	0 *	0 *	0 *	0 *
Octane	244170 *	6.02014 *	0.00457531 *	0.00173079 *	0.00150504 *
Ethylbenzene	6171.1 *	0 *	0 *	0 *	0 *
m-Xylene	71324.9 *	0 *	0 *	0 *	0 *
Nonane	254063 *	0 *	0 *	0 *	0 *
Decane	255470 *	0 *	0 *	0 *	0 *
Undecanes Plus	2.60432E+06 *	0 *	0 *	0 *	0 *

Std Vapor Volumetric Flow	IFR Inlet 250,000 bbl MMSCFD	Inlet Gas MMSCFD	LP Header Purge Gas Cryo MMSCFD	LP Header Purge Gas Stabilizer MMSCFD	Pilot Fuel MMSCFD
Water	0.0417949 *	0.00719993 *	5.47195E-06 *	2.06998E-06 *	1.79998E-06 *
Hydrogen Sulfide	0 *	0 *	0 *	0 *	0 *
Nitrogen, Atomic	0 *	0.764152 *	0.000580756 *	0.000219694 *	0.000191038 *
Carbon Dioxide	0.00278633 *	0.0542395 *	4.1222E-05 *	1.55938E-05 *	1.35599E-05 *
Methane	0 *	35.2878 *	0.0268187 *	0.0101452 *	0.00882195 *
Ethane	0.710514 *	7.06553 *	0.0053698 *	0.00203134 *	0.00176638 *
Propane	3.48848 *	3.46365 *	0.00263237 *	0.000995798 *	0.000865911 *
Isobutane	3.39375 *	0.347517 *	0.000264113 *	9.9911E-05 *	8.68791E-05 *
Butane	13.458 *	0.779032 *	0.000592064 *	0.000223972 *	0.000194758 *

* User Specified Values
? Extrapolated or Approximate Values

Copyright © 2002-2020 BRE Group, Ltd.
Licensed to Esso Exploration, Inc.

Process Streams Report
All Streams
Tabulated by Total Phase

Client Name:	XTO ENERGY INC	Job: DELAWARE DEVELOPMENT
Location:	Cowboy CDP	
Flowsheet:	CDP	

Std Vapor Volumetric Flow	IFR Inlet 250,000 bbl MMSCFD	Inlet Gas MMSCFD	LP Header Purge Gas Cryo MMSCFD	LP Header Purge Gas Stabilizer MMSCFD	Pilot Fuel MMSCFD
Isopentane	9.06392 *	0.099839 *	7.58776E-05 *	2.87037E-05 *	2.49598E-05 *
Pentane	12.9871 *	0.0921591 *	7.00409E-05 *	2.64957E-05 *	2.30398E-05 *
Cyclopentane	0 *	0 *	0 *	0 *	0 *
i-C6	10.1088 *	0.0177598 *	1.34975E-05 *	5.10595E-06 *	4.43996E-06 *
n-Hexane	7.92432 *	0.00767992 *	5.83674E-06 *	2.20798E-06 *	1.91998E-06 *
Methylcyclopentane	6.21072 *	0.00431996 *	3.28317E-06 *	1.24199E-06 *	1.07999E-06 *
Benzene	5.84293 *	0.00095999 *	7.29593E-07 *	2.75997E-07 *	2.39998E-07 *
Cyclohexane	13.692 *	0.00431996 *	3.28317E-06 *	1.24199E-06 *	1.07999E-06 *
2,2,4-Trimethylpentane	0 *	0 *	0 *	0 *	0 *
i-C7	5.3386 *	0.00143999 *	1.09439E-06 *	4.13996E-07 *	3.59996E-07 *
Methylcyclohexane	16.1301 *	0.00143999 *	1.09439E-06 *	4.13996E-07 *	3.59996E-07 *
n-Heptane	10.719 *	0.000479995 *	3.64796E-07 *	1.37999E-07 *	1.19999E-07 *
Toluene	9.63512 *	0 *	0 *	0 *	0 *
Octane	19.4681 *	0.000479995 *	3.64796E-07 *	1.37999E-07 *	1.19999E-07 *
Ethylbenzene	0.529402 *	0 *	0 *	0 *	0 *
m-Xylene	6.11878 *	0 *	0 *	0 *	0 *
Nonane	18.0415 *	0 *	0 *	0 *	0 *
Decane	16.353 *	0 *	0 *	0 *	0 *
Undecanes Plus	89.3715 *	0 *	0 *	0 *	0 *

Stream Properties

Property	Units	IFR Inlet 250,000 bbl	Inlet Gas	LP Header Purge Gas Cryo	LP Header Purge Gas Stabilizer	Pilot Fuel
Temperature	°F	90 *	65 *	65 *	65	65 *
Pressure	psig	0 *	1150 *	50 *	50	50 *
Molecular Weight	lb/lbmol	150.026	21.4004	21.4004	21.4004	21.4004
Molar Flow	lbmol/h	30593.1	5270.31	4.00544	1.51522	1.31758
Std Vapor Volumetric Flow	MMSCFD	278.63	48 *	0.03648 *	0.0138 *	0.012 *
Std Liquid Volumetric Flow	sgpm	11666.7 *	645.752	0.490772	0.185654	0.161438
Net Ideal Gas Heating Value	Btu/ft^3	7401.08	1171.41	1171.41	1171.41	1171.41
Gross Ideal Gas Heating Value	Btu/ft^3	7911.89	1289.45	1289.45	1289.45	1289.45

Remarks

Copyright © 2002-2020 BRE Group, Ltd.
Licensed to Esso Exploration, Inc.

Process Streams Report
All Streams
Tabulated by Total Phase

Client Name:	XTO ENERGY INC	Job: DELAWARE DEVELOPMENT
Location:	Cowboy CDP	
Flowsheet:	CDP	

Connections

	Process Purge Gas Flaring	STAB Outlet 50k	Stab Outlet 250k	Surge Vessel Water	2
From Block	--	IFR - 50,000 bbl	IFR - 250,000 bbl	--	IFR - 50,000 bbl
To Block	--	--	--	MIX-100	--

Stream Composition

Mole Fraction	Process Purge Gas Flaring %	STAB Outlet 50k %	Stab Outlet 250k %	Surge Vessel Water %	2 %
Water	0.88 *	0.0150002	0.0150002	99.9794 *	
Hydrogen Sulfide	0 *	0	0	0 *	
Nitrogen, Atomic	0 *	0	0	7E-06 *	
Carbon Dioxide	0.05 *	0.00100001	0.00100001	0.000613 *	
Methane	0.02 *	0	0	4.3E-05 *	
Ethane	14.64 *	0.255003	0.255003	0.000464 *	
Propane	62.92 *	1.25201	1.25201	0.003878 *	
Isobutane	5.84 *	1.21801	1.21801	0.001161 *	
Butane	10 *	4.83005	4.83005	0.003325 *	
Isopentane	1.54 *	3.25303	3.25303	0.001162 *	
Pentane	1.51 *	4.66105	4.66105	0.00146 *	
Cyclopentane	0 *	0	0	0 *	
i-C6	0.57 *	3.62804	3.62804	0.000836 *	
n-Hexane	0.3 *	2.84403	2.84403	0.000628 *	
Methylcyclopentane	0.24 *	2.22902	2.22902	0.00049 *	
Benzene	0.25 *	2.09702	2.09702	0.000409 *	
Cyclohexane	0.45 *	4.91405	4.91405	0.000978 *	
2,2,4-Trimethylpentane	0 *	0	0	0 *	
i-C7	0.09 *	1.91602	1.91602	0.00039 *	
Methylcyclohexane	0.25 *	5.78906	5.78906	0.001009 *	
n-Heptane	0.15 *	3.84704	3.84704	0.000616 *	
Toluene	0.13 *	3.45803	3.45803	0.000561 *	
Octane	0.1 *	6.98707	6.98707	0.000928 *	
Ethylbenzene	0 *	0.190002	0.190002	2.7E-05 *	
m-Xylene	0.02 *	2.19602	2.19602	0.000286 *	
Nonane	0.03 *	6.47506	6.47506	0.000601 *	
Decane	0.01 *	5.86906	5.86906	0.000383 *	
Undecanes Plus	0.01 *	32.0753	32.0753	0.000373 *	

Mass Fraction	Process Purge Gas Flaring %	STAB Outlet 50k %	Stab Outlet 250k %	Surge Vessel Water %	2 %
Water	0.344012 *	0.00180123	0.00180123	99.9132 *	
Hydrogen Sulfide	0 *	0	0	0 *	
Nitrogen, Atomic	0 *	0	0	5.43883E-06 *	
Carbon Dioxide	0.0477492 *	0.000293348	0.000293348	0.0014965 *	
Methane	0.00696226 *	0	0	3.82658E-05 *	
Ethane	9.55234 *	0.0511089	0.0511089	0.000773943 *	
Propane	60.2051 *	0.36799	0.36799	0.00948581 *	
Isobutane	7.36553 *	0.471874	0.471874	0.00374322 *	
Butane	12.6122 *	1.87122	1.87122	0.0107203 *	
Isopentane	2.41101 *	1.56441	1.56441	0.00465057 *	
Pentane	2.36404 *	2.24153	2.24153	0.00584323 *	
Cyclopentane	0 *	0	0	0 *	
i-C6	1.06588 *	2.08395	2.08395	0.00399632 *	
n-Hexane	0.560988 *	1.63361	1.63361	0.00300202 *	
Methylcyclopentane	0.438292 *	1.2504	1.2504	0.00228755 *	
Benzene	0.423747 *	1.09182	1.09182	0.00177219 *	

Copyright © 2002-2020 BRE Group, Ltd.
Licensed to Esso Exploration, Inc.

Process Streams Report
All Streams
Tabulated by Total Phase

Client Name:	XTO ENERGY INC	Job: DELAWARE DEVELOPMENT
Location:	Cowboy CDP	
Flowsheet:	CDP	

Mass Fraction	Process Purge Gas Flaring %	STAB Outlet 50k %	Stab Outlet 250k %	Surge Vessel Water %	2 %
Cyclohexane	0.821798 *	2.75661	2.75661	0.00456576 *	
2,2,4-Trimethylpentane	0 *	0	0	0 *	
i-C7	0.19569 *	1.2797	1.2797	0.00216776 *	
Methylcyclohexane	0.532647 *	3.7887	3.7887	0.00549556 *	
n-Heptane	0.326149 *	2.56942	2.56942	0.00342396 *	
Toluene	0.259916 *	2.12375	2.12375	0.00286731 *	
Octane	0.24787 *	5.31988	5.31988	0.00588022 *	
Ethylbenzene	0 *	0.134453	0.134453	0.000159007 *	
m-Xylene	0.0460745 *	1.554	1.554	0.0016843 *	
Nonane	0.0834921 *	5.53543	5.53543	0.00427583 *	
Decane	0.0308744 *	5.56609	5.56609	0.00302287 *	
Undecanes Plus	0.0575904 *	56.742	56.742	0.00549137 *	

Mass Flow	Process Purge Gas Flaring lb/h	STAB Outlet 50k lb/h	Stab Outlet 250k lb/h	Surge Vessel Water lb/h	2 lb/h
Water	208.882 *	41.3361	82.6722	58283.7 *	0
Hydrogen Sulfide	0 *	0	0	0 *	0
Nitrogen, Atomic	0 *	0	0	0.0031727 *	0
Carbon Dioxide	28.993 *	6.732	13.464	0.872977 *	0
Methane	4.22744 *	0	0	0.0223221 *	0
Ethane	5800.12 *	1172.89	2345.78	0.451475 *	0
Propane	36556.2 *	8444.95	16889.9	5.53349 *	0
Isobutane	4472.3 *	10829	21657.9	2.18358 *	0
Butane	7658.06 *	42942.4	85884.8	6.25359 *	0
Isopentane	1463.95 *	35901.3	71802.6	2.71288 *	0
Pentane	1435.43 *	51440.5	102881	3.40861 *	0
Cyclopentane	0 *	0	0	0 *	0
i-C6	647.194 *	47824.2	95648.4	2.33123 *	0
n-Hexane	340.628 *	37489.5	74979.1	1.75121 *	0
Methylcyclopentane	266.128 *	28695.3	57390.6	1.33443 *	0
Benzene	257.296 *	25056.1	50112.1	1.0338 *	0
Cyclohexane	498.99 *	63260.9	126522	2.66341 *	0
2,2,4-Trimethylpentane	0 *	0	0	0 *	0
i-C7	118.822 *	29367.6	58735.3	1.26455 *	0
Methylcyclohexane	323.42 *	86946.2	173892	3.2058 *	0
n-Heptane	198.036 *	58965.2	117930	1.99734 *	0
Toluene	157.819 *	48737.5	97475	1.67263 *	0
Octane	150.505 *	122085	244170	3.43019 *	0
Ethylbenzene	0 *	3085.55	6171.1	0.0927558 *	0
m-Xylene	27.9761 *	35662.4	71324.9	0.982524 *	0
Nonane	50.6958 *	127032	254063	2.49428 *	0
Decane	18.7467 *	127735	255470	1.76337 *	0
Undecanes Plus	34.9685 *	1.30216E+06	2.60432E+06	3.20336 *	0

Std Vapor Volumetric Flow	Process Purge Gas Flaring MMSCFD	STAB Outlet 50k MMSCFD	Stab Outlet 250k MMSCFD	Surge Vessel Water MMSCFD	2 MMSCFD
Water	0.1056 *	0.0208975	0.0417949	29.4653 *	0
Hydrogen Sulfide	0 *	0	0	0 *	0
Nitrogen, Atomic	0 *	0	0	2.063E-06 *	0
Carbon Dioxide	0.006 *	0.00139316	0.00278633	0.00018066 *	0
Methane	0.0024 *	0	0	1.26727E-05 *	0
Ethane	1.7568 *	0.355257	0.710514	0.000136747 *	0
Propane	7.5504 *	1.74424	3.48848	0.0011429 *	0
Isobutane	0.7008 *	1.69687	3.39375	0.000342163 *	0
Butane	1.2 *	6.72898	13.458	0.000979924 *	0

* User Specified Values
? Extrapolated or Approximate Values

Copyright © 2002-2020 BRE Group, Ltd.
Licensed to Esso Exploration, Inc.

Process Streams Report
All Streams
Tabulated by Total Phase

Client Name:	XTO ENERGY INC	Job: DELAWARE DEVELOPMENT
Location:	Cowboy CDP	
Flowsheet:	CDP	

Std Vapor Volumetric Flow	Process Purge Gas Flaring MMSCFD	STAB Outlet 50k MMSCFD	Stab Outlet 250k MMSCFD	Surge Vessel Water MMSCFD	2 MMSCFD
Isopentane	0.1848 *	4.53196	9.06392	0.000342458 *	0
Pentane	0.1812 *	6.49354	12.9871	0.000430282 *	0
Cyclopentane	0 *	0	0	0 *	0
i-C6	0.0684 *	5.0544	10.1088	0.000246381 *	0
n-Hexane	0.036 *	3.96216	7.92432	0.00018508 *	0
Methylcyclopentane	0.0288 *	3.10536	6.21072	0.00014441 *	0
Benzene	0.03 *	2.92146	5.84293	0.000120538 *	0
Cyclohexane	0.054 *	6.84601	13.692	0.00028823 *	0
2,2,4-Trimethylpentane	0 *	0	0	0 *	0
i-C7	0.0108 *	2.6693	5.3386	0.000114938 *	0
Methylcyclohexane	0.03 *	8.06503	16.1301	0.000297366 *	0
n-Heptane	0.018 *	5.3595	10.719	0.000181544 *	0
Toluene	0.0156 *	4.81756	9.63512	0.000165334 *	0
Octane	0.012 *	9.73404	19.4681	0.000273494 *	0
Ethylbenzene	0 *	0.264701	0.529402	7.95728E-06 *	0
m-Xylene	0.0024 *	3.05939	6.11878	8.42882E-05 *	0
Nonane	0.0036 *	9.02074	18.0415	0.000177123 *	0
Decane	0.0012 *	8.17648	16.353	0.000112875 *	0
Undecanes Plus	0.0012 *	44.6857	89.3715	0.000109928 *	0

Stream Properties

Property	Units	Process Purge Gas Flaring	STAB Outlet 50k	Stab Outlet 250k	Surge Vessel Water	2
Temperature	°F	65 *	90	90	100 *	
Pressure	psig	1150 *	0	0	5 *	0 *
Molecular Weight	lb/lbmol	46.0841	150.026	150.026	18.0272	
Molar Flow	lbmol/h	1317.58	15296.5	30593.1	3235.91	0
Std Vapor Volumetric Flow	MMSCFD	12 *	139.315	278.63	29.4714	0
Std Liquid Volumetric Flow	sgpm	236.904	5833.33	11666.7	116.667 *	0
Net Ideal Gas Heating Value	Btu/ft^3	2399.81	7401.08	7401.08	0.778404	
Gross Ideal Gas Heating Value	Btu/ft^3	2606.34	7911.89	7911.89	51.1379	

Remarks

Copyright © 2002-2020 BRE Group, Ltd.
Licensed to Esso Exploration, Inc.

Process Streams Report
All Streams
Tabulated by Total Phase

Client Name:	XTO ENERGY INC	Job: DELAWARE DEVELOPMENT
Location:	Cowboy CDP	
Flowsheet:	CDP	

Connections

	6	7	8	9	10
From Block	Slop Oil Tank	Slop Oil Tank	Produced Water Tanks	Produced Water Tanks	MIX-100
To Block	--	--	--	--	Gunbarrel

Stream Composition

Mole Fraction	6 %	7 %	8 %	9 %	10 %
Water	0.0889594	0.00146186	5.35325	99.9972	99.9794
Hydrogen Sulfide	0	0	0	0	0
Nitrogen, Atomic	0.0016534	2.86273E-06	0.0734368	1.21112E-08	7.14286E-06
Carbon Dioxide	0.0405462	0.000496385	1.3046	0.000485219	0.000612857
Methane	0.503145	0.00222928	0.366047	7.23542E-06	4.28571E-05
Ethane	5.22945	0.148905	3.66163	0.000100825	0.00046381
Propane	39.7371	4.03438	31.4023	0.000601187	0.0038781
Isobutane	9.96035	2.58631	9.11952	0.000111594	0.00116095
Butane	25.1551	9.77058	23.5852	0.000413641	0.00332524
Isopentane	5.7569	5.70306	6.68742	7.78926E-05	0.0011619
Pentane	6.10468	8.09522	7.76307	4.07373E-05	0.00146
Cyclopentane	0	0	0	0	0
i-C6	1.85819	5.97568	2.7325	1.83875E-05	0.00083619
n-Hexane	1.03535	4.80228	1.63061	5.61053E-06	0.000628095
Methylcyclopentane	0.815604	3.69861	1.21345	3.20557E-05	0.00049
Benzene	0.561948	2.69443	0.161517	0.000346269	0.000409048
Cyclohexane	1.32365	7.56467	1.94192	0.000115392	0.000978095
2,2,4-Trimethylpentane	0	0	0	0	0
i-C7	0.33606	3.25976	0.573694	2.30011E-06	0.00039
Methylcyclohexane	0.600382	8.63519	1.05115	2.65386E-05	0.00100905
n-Heptane	0.370643	5.29882	0.659313	1.57787E-06	0.00061619
Toluene	0.254427	4.28562	0.209696	0.000339222	0.000560952
Octane	0.17958	8.3399	0.349126	3.72474E-07	0.000928095
Ethylbenzene	0.00397041	0.227357	0.00597739	8.1719E-06	2.71429E-05
m-Xylene	0.0392111	2.46749	0.0643978	6.04147E-05	0.00028619
Nonane	0.0357826	5.48007	0.0742195	6.66851E-08	0.000600952
Decane	0.00734511	3.50622	0.015916	4.38467E-09	0.000382857
Undecanes Plus	4.48763E-07	3.42127	1.50874E-06	3.19817E-11	0.000372857

Mass Fraction	6 %	7 %	8 %	9 %	10 %
Water	0.0292719	0.000279213	1.73504	99.9904	99.9131
Hydrogen Sulfide	0	0	0	0	0
Nitrogen, Atomic	0.000422992	4.25113E-07	0.0185055	9.4157E-09	5.54982E-06
Carbon Dioxide	0.0325923	0.000231608	1.03294	0.00118526	0.00149616
Methane	0.147429	0.000379161	0.105647	6.44264E-06	3.81387E-05
Ethane	2.87207	0.0474699	1.98082	0.000168275	0.000773625
Propane	32.0045	1.88609	24.912	0.00147141	0.00948604
Isobutane	10.5739	1.59372	9.53596	0.000360009	0.00374307
Butane	26.7046	6.02076	24.6622	0.00133443	0.010721
Isopentane	7.58642	4.36241	8.68037	0.000311928	0.00465019
Pentane	8.04471	6.19222	10.0766	0.000163136	0.00584323
Cyclopentane	0	0	0	0	0
i-C6	2.92478	5.45958	4.23637	8.79498E-05	0.00399723
n-Hexane	1.62963	4.38753	2.52804	2.68359E-05	0.00300248
Methylcyclopentane	1.25372	3.30012	1.83728	0.00014974	0.00228755
Benzene	0.801737	2.23138	0.226978	0.00150128	0.0017724
Cyclohexane	2.03467	6.74966	2.94025	0.000539022	0.00456621
2,2,4-Trimethylpentane	0	0	0	0	0
i-C7	0.615052	3.46299	1.03421	1.27925E-05	0.00216776
Methylcyclohexane	1.0767	8.98899	1.85679	0.00014463	0.00549582
n-Heptane	0.678345	5.62916	1.18855	8.77562E-06	0.00342501
Toluene	0.428176	4.18642	0.347601	0.00173482	0.00286707

Copyright © 2002-2020 BRE Group, Ltd.
Licensed to Esso Exploration, Inc.

Process Streams Report
All Streams
Tabulated by Total Phase

Client Name:	XTO ENERGY INC	Job: DELAWARE DEVELOPMENT
Location:	Cowboy CDP	
Flowsheet:	CDP	

Mass Fraction	6 %	7 %	8 %	9 %	10 %
Octane	0.374672	10.1001	0.717476	2.36156E-06	0.00588083
Ethylbenzene	0.00769903	0.255905	0.0114168	4.81541E-05	0.000159848
m-Xylene	0.0760342	2.77732	0.122999	0.000356003	0.00168542
Nonane	0.0838234	7.4516	0.171255	4.74715E-07	0.00427549
Decane	0.0190882	5.28904	0.0407411	3.4627E-08	0.00302174
Undecanes Plus	2.17539E-06	9.62668	7.20389E-06	4.7112E-10	0.00548927

Mass Flow	6 lb/h	7 lb/h	8 lb/h	9 lb/h	10 lb/h
Water	0.0170324	0.000455896	0.0317681	61197.6	61197.9
Hydrogen Sulfide	0	0	0	0	0
Nitrogen, Atomic	0.000246126	6.94122E-07	0.000338831	5.76273E-06	0.00339933
Carbon Dioxide	0.0189644	0.000378169	0.0189128	0.72542	0.916412
Methane	0.0857842	0.000619092	0.00193438	0.00394312	0.0233603
Ethane	1.67116	0.0775085	0.0362683	0.10299	0.473854
Propane	18.6224	3.07959	0.456132	0.900555	5.81031
Isobutane	6.15262	2.60221	0.174601	0.220338	2.29267
Butane	15.5386	9.83066	0.451559	0.816717	6.56674
Isopentane	4.4143	7.1229	0.158935	0.190911	2.84829
Pentane	4.68096	10.1106	0.1845	0.0998451	3.57904
Cyclopentane	0	0	0	0	0
i-C6	1.70183	8.91436	0.0775669	0.0538283	2.44835
n-Hexane	0.948231	7.16392	0.0462879	0.0164245	1.83905
Methylcyclopentane	0.729501	5.38842	0.0336402	0.0916459	1.40115
Benzene	0.466505	3.64337	0.00415592	0.918833	1.08561
Cyclohexane	1.18391	11.0208	0.0538353	0.3299	2.79685
2,2,4-Trimethylpentane	0	0	0	0	0
i-C7	0.35788	5.65434	0.0189361	0.00782944	1.32778
Methylcyclohexane	0.6265	14.6772	0.0339974	0.0885184	3.36625
n-Heptane	0.394708	9.19126	0.0217621	0.00537098	2.09786
Toluene	0.249142	6.83556	0.00636449	1.06177	1.75611
Octane	0.21801	16.4913	0.0131368	0.00144536	3.60207
Ethylbenzene	0.00447982	0.41784	0.000209038	0.029472	0.0979089
m-Xylene	0.0442419	4.53478	0.00225209	0.217886	1.03234
Nonane	0.0487742	12.1669	0.00313564	0.000290542	2.61878
Decane	0.0111068	8.63591	0.00074596	2.11929E-05	1.85085
Undecanes Plus	1.26579E-06	15.7184	1.31902E-07	2.88341E-07	3.36224

Std Vapor Volumetric Flow	6 MMSCFD	7 MMSCFD	8 MMSCFD	9 MMSCFD	10 MMSCFD
Water	8.61073E-06	2.30478E-07	1.60604E-05	30.9384	30.9386
Hydrogen Sulfide	0	0	0	0	0
Nitrogen, Atomic	1.60039E-07	4.51341E-10	2.20319E-07	3.74712E-09	2.21035E-06
Carbon Dioxide	3.92463E-06	7.82607E-08	3.91395E-06	0.000150123	0.000189648
Methane	4.87014E-05	3.51471E-07	1.09818E-06	2.23859E-06	1.32621E-05
Ethane	0.000506179	2.34766E-05	1.09853E-05	3.11946E-05	0.000143526
Propane	0.00384631	0.000636066	9.42107E-05	0.000186003	0.00120007
Isobutane	0.000964102	0.00040776	2.73596E-05	3.45264E-05	0.000359256
Butane	0.00243486	0.00154044	7.07583E-05	0.000127978	0.00102899
Isopentane	0.000557234	0.000899152	2.0063E-05	2.40994E-05	0.000359551
Pentane	0.000590896	0.0012763	2.32901E-05	1.26038E-05	0.000451796
Cyclopentane	0	0	0	0	0
i-C6	0.000179862	0.000942132	8.19782E-06	5.68895E-06	0.000258759
n-Hexane	0.000100216	0.000757133	4.89203E-06	1.73586E-06	0.000194364
Methylcyclopentane	7.89455E-05	0.000583127	3.64049E-06	9.91779E-06	0.00015163
Benzene	5.43932E-05	0.000424807	4.84568E-07	0.000107133	0.00012658
Cyclohexane	0.000128121	0.00119265	5.82597E-06	3.57013E-05	0.000302671
2,2,4-Trimethylpentane	0	0	0	0	0
i-C7	3.25286E-05	0.000513938	1.72115E-06	7.11638E-07	0.000120685
Methylcyclohexane	5.81134E-05	0.00136143	3.15356E-06	8.21086E-06	0.000312249

Copyright © 2002-2020 BRE Group, Ltd.
Licensed to Esso Exploration, Inc.

Process Streams Report
All Streams
Tabulated by Total Phase

Client Name:	XTO ENERGY INC	Job: DELAWARE DEVELOPMENT
Location:	Cowboy CDP	
Flowsheet:	CDP	

Std Vapor Volumetric Flow	6 MMSCFD	7 MMSCFD	8 MMSCFD	9 MMSCFD	10 MMSCFD
n-Heptane	3.5876E-05	0.000835418	1.97801E-06	4.88183E-07	0.00019068
Toluene	2.4627E-05	0.000675675	6.29111E-07	0.000104953	0.000173586
Octane	1.73823E-05	0.00131488	1.04742E-06	1.15241E-07	0.000287199
Ethylbenzene	3.84312E-07	3.58454E-05	1.79329E-08	2.52833E-06	8.39935E-06
m-Xylene	3.7954E-06	0.000389027	1.93201E-07	1.86919E-05	8.85615E-05
Nonane	3.46354E-06	0.000863994	2.22667E-07	2.06319E-08	0.000185964
Decane	7.10962E-07	0.000552795	4.77498E-08	1.35658E-09	0.000118475
Undecanes Plus	4.34375E-11	0.000539401	4.52641E-12	9.89489E-12	0.00011538

Stream Properties

Property	Units	6	7	8	9	10
Temperature	°F	75 *	75	90 *	90	100.001
Pressure	psig	0.25 *	0.25	0.25 *	0.25	5
Molecular Weight	lb/lbmol	54.7496	94.3216	55.584	18.0165	18.0272
Molar Flow	lbmol/h	1.06278	1.73109	0.0329407	3397.08	3397.7
Std Vapor Volumetric Flow	MMSCFD	0.0096794	0.0157661	0.000300012	30.9393	30.945
Std Liquid Volumetric Flow	sgpm	0.206719	0.458453	0.00626876	122.355	122.5
Net Ideal Gas Heating Value	Btu/ft^3	2832.98	4724.94	2791	0.0748466	0.778423
Gross Ideal Gas Heating Value	Btu/ft^3	3069.53	5075.61	3025.02	50.3885	51.1379

Remarks

Copyright © 2002-2020 BRE Group, Ltd.
Licensed to Esso Exploration, Inc.

Process Streams Report
All Streams
Tabulated by Total Phase

Client Name:	XTO ENERGY INC	Job: DELAWARE DEVELOPMENT
Location:	Cowboy CDP	
Flowsheet:	CDP	

Connections

	12	13	14	15	16
From Block	--	--	MIX-102	--	--
To Block	MIX-102	MIX-102	--	MIX-103	MIX-103

Stream Composition

Mole Fraction	12 %	13 %	14 %	15 %	16 %
Water	54.3498 *	54.3498 *	54.3498	3.20585E-05 *	3.20585E-05 *
Hydrogen Sulfide	0 *	0 *	0	0 *	0 *
Nitrogen, Atomic	0.000235055 *	0.000235055 *	0.000235055	0.000163458 *	0.000163458 *
Carbon Dioxide	9.60475 *	9.60475 *	9.60475	0.0354818 *	0.0354818 *
Methane	0.144057 *	0.144057 *	0.144057	0.163774 *	0.163774 *
Ethane	2.00789 *	2.00789 *	2.00789	6.65192 *	6.65192 *
Propane	11.9996 *	11.9996 *	11.9996	40.5758 *	40.5758 *
Isobutane	2.24166 *	2.24166 *	2.24166	9.194 *	9.194 *
Butane	8.25928 *	8.25928 *	8.25928	24.0007 *	24.0007 *
Isopentane	1.56347 *	1.56347 *	1.56347	5.75329 *	5.75329 *
Pentane	0.816412 *	0.816412 *	0.816412	6.18368 *	6.18368 *
Cyclopentane	0 *	0 *	0	0 *	0 *
i-C6	0.369478 *	0.369478 *	0.369478	2.02494 *	2.02494 *
n-Hexane	0.112926 *	0.112926 *	0.112926	1.17572 *	1.17572 *
Methylcyclopentane	0.63947 *	0.63947 *	0.63947	0.823902 *	0.823902 *
Benzene	1.81496 *	1.81496 *	1.81496	0.403222 *	0.403222 *
Cyclohexane	2.29384 *	2.29384 *	2.29384	1.19301 *	1.19301 *
2,2,4-Trimethylpentane	0 *	0 *	0	0 *	0 *
i-C7	0.0467993 *	0.0467993 *	0.0467993	0.349371 *	0.349371 *
Methylcyclohexane	0.530049 *	0.530049 *	0.530049	0.659421 *	0.659421 *
n-Heptane	0.0319432 *	0.0319432 *	0.0319432	0.389012 *	0.389012 *
Toluene	2.36776 *	2.36776 *	2.36776	0.192926 *	0.192926 *
Octane	0.00752584 *	0.00752584 *	0.00752584	0.162306 *	0.162306 *
Ethylbenzene	0.0653563 *	0.0653563 *	0.0653563	0.00322941 *	0.00322941 *
m-Xylene	0.731303 *	0.731303 *	0.731303	0.0305145 *	0.0305145 *
Nonane	0.0013711 *	0.0013711 *	0.0013711	0.0283468 *	0.0283468 *
Decane	8.99332E-05 *	8.99332E-05 *	8.99332E-05	0.00527373 *	0.00527373 *
Undecanes Plus	6.45841E-07 *	6.45841E-07 *	6.45841E-07	1.48202E-07 *	1.48202E-07 *

Mass Fraction	12 %	13 %	14 %	15 %	16 %
Water	27.4294	27.4294	27.4294	1.06086E-05	1.06086E-05
Hydrogen Sulfide	0	0	0	0	0
Nitrogen, Atomic	9.22326E-05	9.22326E-05	9.22326E-05	4.2055E-05	4.2055E-05
Carbon Dioxide	11.8416	11.8416	11.8416	0.0286832	0.0286832
Methane	0.0647415	0.0647415	0.0647415	0.0482604	0.0482604
Ethane	1.69137	1.69137	1.69137	3.67402	3.67402
Propane	14.8232	14.8232	14.8232	32.8653	32.8653
Isobutane	3.64997	3.64997	3.64997	9.81572	9.81572
Butane	13.4482	13.4482	13.4482	25.6237	25.6237
Isopentane	3.16007	3.16007	3.16007	7.62467	7.62467
Pentane	1.65013	1.65013	1.65013	8.19504	8.19504
Cyclopentane	0	0	0	0	0
i-C6	0.891969	0.891969	0.891969	3.20532	3.20532
n-Hexane	0.272617	0.272617	0.272617	1.86107	1.86107
Methylcyclopentane	1.50765	1.50765	1.50765	1.27366	1.27366
Benzene	3.97158	3.97158	3.97158	0.578543	0.578543
Cyclohexane	5.40809	5.40809	5.40809	1.84425	1.84425
2,2,4-Trimethylpentane	0	0	0	0	0
i-C7	0.131369	0.131369	0.131369	0.643041	0.643041
Methylcyclohexane	1.45796	1.45796	1.45796	1.18929	1.18929
n-Heptane	0.0896669	0.0896669	0.0896669	0.716001	0.716001
Toluene	6.11162	6.11162	6.11162	0.326518	0.326518
Octane	0.0240829	0.0240829	0.0240829	0.340552	0.340552

* User Specified Values
? Extrapolated or Approximate Values

Copyright © 2002-2020 BRE Group, Ltd.
Licensed to Esso Exploration, Inc.

Process Streams Report
All Streams
Tabulated by Total Phase

Client Name:	XTO ENERGY INC	Job: DELAWARE DEVELOPMENT
Location:	Cowboy CDP	
Flowsheet:	CDP	

Mass Fraction	12 %	13 %	14 %	15 %	16 %
Ethylbenzene	0.194378	0.194378	0.194378	0.00629767	0.00629767
m-Xylene	2.17499	2.17499	2.17499	0.0595062	0.0595062
Nonane	0.00492632	0.00492632	0.00492632	0.0667812	0.0667812
Decane	0.000358465	0.000358465	0.000358465	0.0137829	0.0137829
Undecanes Plus	4.80181E-06	4.80181E-06	4.80181E-06	7.22487E-07	7.22487E-07

Mass Flow	12 lb/h	13 lb/h	14 lb/h	15 lb/h	16 lb/h
Water	1.64418 *	0.0372746 *	1.68146	2.17016E-08 *	5.44542E-08 *
Hydrogen Sulfide	0 *	0 *	0	0 *	0 *
Nitrogen, Atomic	5.52862E-06 *	1.25337E-07 *	5.65396E-06	8.60301E-08 *	2.15868E-07 *
Carbon Dioxide	0.709812 *	0.0160919 *	0.725904	5.86759E-05 *	0.000147231 *
Methane	0.00388074 *	8.79789E-05 *	0.00396872	9.87242E-05 *	0.000247721 *
Ethane	0.101384 *	0.00229845 *	0.103683	0.00751578 *	0.0188588 *
Propane	0.888533 *	0.0201436 *	0.908676	0.0672311 *	0.168698 *
Isobutane	0.218787 *	0.00496004 *	0.223747	0.0200796 *	0.0503841 *
Butane	0.806112 *	0.0182751 *	0.824387	0.0524172 *	0.131526 *
Isopentane	0.189422 *	0.00429431 *	0.193716	0.0155974 *	0.0391374 *
Pentane	0.0989121 *	0.0022424 *	0.101155	0.0167642 *	0.0420652 *
Cyclopentane	0 *	0 *	0	0 *	0 *
i-C6	0.0534665 *	0.00121212 *	0.0546787	0.00655697 *	0.0164529 *
n-Hexane	0.0163413 *	0.000370467 *	0.0167117	0.00380712 *	0.0095529 *
Methylcyclopentane	0.090372 *	0.00204879 *	0.0924208	0.00260547 *	0.00653771 *
Benzene	0.238065 *	0.00539708 *	0.243462	0.0011835 *	0.00296967 *
Cyclohexane	0.324173 *	0.0073492 *	0.331522	0.00377271 *	0.00946656 *
2,2,4-Trimethylpentane	0 *	0 *	0	0 *	0 *
i-C7	0.00787455 *	0.000178521 *	0.00805307	0.00131544 *	0.00330073 *
Methylcyclohexane	0.0873931 *	0.00198125 *	0.0893743	0.00243288 *	0.00610463 *
n-Heptane	0.00537483 *	0.000121851 *	0.00549668	0.00146469 *	0.00367524 *
Toluene	0.366344 *	0.00830524 *	0.374649	0.000667945 *	0.00167602 *
Octane	0.00144358 *	3.27268E-05 *	0.00147631	0.000696652 *	0.00174805 *
Ethylbenzene	0.0116515 *	0.000264146 *	0.0119156	1.28829E-05 *	3.23259E-05 *
m-Xylene	0.130374 *	0.00295565 *	0.133329	0.000121729 *	0.000305446 *
Nonane	0.000295295 *	6.69451E-06 *	0.000301989	0.000136612 *	0.000342788 *
Decane	2.14872E-05 *	4.87128E-07 *	2.19743E-05	2.81952E-05 *	7.07479E-05 *
Undecanes Plus	2.87831E-07 *	6.5253E-09 *	2.94356E-07	1.47796E-09 *	3.70853E-09 *

Std Vapor Volumetric Flow	12 MMSCFD	13 MMSCFD	14 MMSCFD	15 MMSCFD	16 MMSCFD
Water	0.000831215 *	1.88442E-05 *	0.000850059	1.09713E-11 *	2.75293E-11 *
Hydrogen Sulfide	0 *	0 *	0	0 *	0 *
Nitrogen, Atomic	3.59489E-09 *	8.14984E-11 *	3.67639E-09	5.59396E-11 *	1.40365E-10 *
Carbon Dioxide	0.000146893 *	3.33016E-06 *	0.000150223	1.21428E-08 *	3.04689E-08 *
Methane	2.20317E-06 *	4.99473E-08 *	2.25312E-06	5.60477E-08 *	1.40636E-07 *
Ethane	3.07083E-05 *	6.96177E-07 *	3.14045E-05	2.27646E-06 *	5.71213E-06 *
Propane	0.00018352 *	4.16051E-06 *	0.00018768	1.38861E-05 *	3.48432E-05 *
Isobutane	3.42834E-05 *	7.77227E-07 *	3.50607E-05	3.14643E-06 *	7.89508E-06 *
Butane	0.000126316 *	2.86366E-06 *	0.00012918	8.21366E-06 *	2.06099E-05 *
Isopentane	2.39114E-05 *	5.42087E-07 *	2.44535E-05	1.96893E-06 *	4.94047E-06 *
Pentane	1.24861E-05 *	2.83067E-07 *	1.27691E-05	2.11621E-06 *	5.31005E-06 *
Cyclopentane	0 *	0 *	0	0 *	0 *
i-C6	5.65072E-06 *	1.28105E-07 *	5.77882E-06	6.92987E-07 *	1.73886E-06 *
n-Hexane	1.72706E-06 *	3.91536E-08 *	1.76621E-06	4.02363E-07 *	1.00962E-06 *
Methylcyclopentane	9.77993E-06 *	2.21717E-07 *	1.00016E-05	2.81961E-07 *	7.07502E-07 *
Benzene	2.77577E-05 *	6.29284E-07 *	2.8387E-05	1.37993E-07 *	3.46254E-07 *
Cyclohexane	3.50815E-05 *	7.9532E-07 *	3.58768E-05	4.08277E-07 *	1.02446E-06 *
2,2,4-Trimethylpentane	0 *	0 *	0	0 *	0 *
i-C7	7.15739E-07 *	1.62262E-08 *	7.31965E-07	1.19564E-07 *	3.00012E-07 *
Methylcyclohexane	8.10647E-06 *	1.83779E-07 *	8.29025E-06	2.25671E-07 *	5.66258E-07 *
n-Heptane	4.88533E-07 *	1.10753E-08 *	4.99608E-07	1.3313E-07 *	3.34052E-07 *

Copyright © 2002-2020 BRE Group, Ltd.
Licensed to Esso Exploration, Inc.

Process Streams Report
All Streams
Tabulated by Total Phase

Client Name:	XTO ENERGY INC	Job: DELAWARE DEVELOPMENT
Location:	Cowboy CDP	
Flowsheet:	CDP	

Std Vapor Volumetric Flow	12 MMSCFD	13 MMSCFD	14 MMSCFD	15 MMSCFD	16 MMSCFD
Toluene	3.6212E-05 *	8.20949E-07 *	3.7033E-05	6.60244E-08 *	1.6567E-07 *
Octane	1.15099E-07 *	2.60936E-09 *	1.17708E-07	5.55451E-08 *	1.39375E-07 *
Ethylbenzene	9.99547E-07 *	2.26604E-08 *	1.02221E-06	1.10519E-09 *	2.77316E-09 *
m-Xylene	1.11844E-05 *	2.53557E-07 *	1.1438E-05	1.04428E-08 *	2.62034E-08 *
Nonane	2.09694E-08 *	4.75389E-10 *	2.14448E-08	9.70102E-09 *	2.4342E-08 *
Decane	1.37542E-09 *	3.11817E-11 *	1.4066E-09	1.80481E-09 *	4.52866E-09 *
Undecanes Plus	9.87736E-12 *	2.23926E-13 *	1.01013E-11	5.07185E-14 *	1.27264E-13 *

Stream Properties

Property	Units	12	13	14	15	16
Temperature	°F	90.5103	90.5103	90.5103	62.7257	62.7257
Pressure	psig	-11.4229	-11.4229	-11.4229	-2.76409	-2.76409
Molecular Weight	lb/lbmol	35.6962	35.6962	35.6962	54.4408	54.4408
Molar Flow	lbmol/h	0.167923	0.00380692	0.17173	0.00375758	0.00942859
Std Vapor Volumetric Flow	MMSCFD	0.00152938	3.4672E-05	0.00156405	3.42226E-05	8.5872E-05
Std Liquid Volumetric Flow	sgpm	0.0168273	0.000381486	0.0172088	0.000730909	0.00183401
Net Ideal Gas Heating Value	Btu/ft^3	1095.36	1095.36	1095.36	2819.83	2819.83
Gross Ideal Gas Heating Value	Btu/ft^3	1205.88	1205.88	1205.88	3055.76	3055.76

Remarks

Copyright © 2002-2020 BRE Group, Ltd.
Licensed to Esso Exploration, Inc.

Process Streams Report
All Streams
Tabulated by Total Phase

Client Name:	XTO ENERGY INC	Job: DELAWARE DEVELOPMENT
Location:	Cowboy CDP	
Flowsheet:	CDP	

Connections

	17	18	19	20	21
From Block	MIX-103	Gunbarrel	Gunbarrel	--	--
To Block	--	Produced Water Tanks	--	MIX-104	MIX-104

Stream Composition

Mole Fraction	17 %	18 %	19 %	20 %	21 %
Water	3.20585E-05	99.9963	5.35325	98.7072 *	98.7072 *
Hydrogen Sulfide	0	0	0	0 *	0 *
Nitrogen, Atomic	0.000163458	7.24205E-07	0.0734368	1.80835E-05 *	1.80835E-05 *
Carbon Dioxide	0.0354818	0.000497865	1.3046	0.813348 *	0.813348 *
Methane	0.163774	1.07848E-05	0.366047	0.00792141 *	0.00792141 *
Ethane	6.65192	0.00013633	3.66163	0.110807 *	0.110807 *
Propane	40.5758	0.00090568	31.4023	0.219082 *	0.219082 *
Isobutane	9.194	0.000200022	9.11952	0.0269074 *	0.0269074 *
Butane	24.0007	0.000642336	23.5852	0.0687878 *	0.0687878 *
Isopentane	5.75329	0.000142738	6.68742	0.0134055 *	0.0134055 *
Pentane	6.18368	0.000116013	7.76307	0.0138543 *	0.0138543 *
Cyclopentane	0	0	0	0 *	0 *
i-C6	2.02494	4.48835E-05	2.7325	0.00466931 *	0.00466931 *
n-Hexane	1.17572	2.1422E-05	1.63061	0.00276646 *	0.00276646 *
Methylcyclopentane	0.823902	4.38218E-05	1.21345	0.00198634 *	0.00198634 *
Benzene	0.403222	0.000347832	0.161517	0.00145397 *	0.00145397 *
Cyclohexane	1.19301	0.000134221	1.94192	0.00300822 *	0.00300822 *
2,2,4-Trimethylpentane	0	0	0	0 *	0 *
i-C7	0.349371	7.86302E-06	0.573694	0.000869214 *	0.000869214 *
Methylcyclohexane	0.659421	3.6731E-05	1.05115	0.00165739 *	0.00165739 *
n-Heptane	0.389012	7.97101E-06	0.659313	0.00100383 *	0.00100383 *
Toluene	0.192926	0.000341252	0.209696	0.000614138 *	0.000614138 *
Octane	0.162306	3.75784E-06	0.349126	0.000476375 *	0.000476375 *
Ethylbenzene	0.00322941	8.22978E-06	0.00597739	1.03704E-05 *	1.03704E-05 *
m-Xylene	0.0305145	6.10386E-05	0.0643978	9.59216E-05 *	9.59216E-05 *
Nonane	0.0283468	7.86368E-07	0.0742195	8.45926E-05 *	8.45926E-05 *
Decane	0.00527373	1.58717E-07	0.015916	1.39238E-05 *	1.39238E-05 *
Undecanes Plus	1.48202E-07	4.66112E-11	1.50874E-06	1.48791E-09 *	1.48791E-09 *

Mass Fraction	17 %	18 %	19 %	20 %	21 %
Water	1.06086E-05	99.9874	1.73504	96.8359	96.8359
Hydrogen Sulfide	0	0	0	0	0
Nitrogen, Atomic	4.2055E-05	5.63013E-07	0.0185055	1.37932E-05	1.37932E-05
Carbon Dioxide	0.0286832	0.00121613	1.03294	1.94926	1.94926
Methane	0.0482604	9.60293E-06	0.105647	0.00692023	0.00692023
Ethane	3.67402	0.000227527	1.98082	0.181439	0.181439
Propane	32.8653	0.00221662	24.912	0.526076	0.526076
Isobutane	9.81572	0.000645269	9.53596	0.0851649	0.0851649
Butane	25.6237	0.00207217	24.6622	0.217721	0.217721
Isopentane	7.62467	0.000571595	8.68037	0.0526694	0.0526694
Pentane	8.19504	0.000464576	10.0766	0.0544327	0.0544327
Cyclopentane	0	0	0	0	0
i-C6	3.20532	0.000214679	4.23637	0.021912	0.021912
n-Hexane	1.86107	0.000102462	2.52804	0.0129824	0.0129824
Methylcyclopentane	1.27366	0.000204698	1.83728	0.0091034	0.0091034
Benzene	0.578543	0.00150802	0.226978	0.0061847	0.0061847
Cyclohexane	1.84425	0.000626965	2.94025	0.0137867	0.0137867
2,2,4-Trimethylpentane	0	0	0	0	0
i-C7	0.643041	4.37307E-05	1.03421	0.00474296	0.00474296
Methylcyclohexane	1.18929	0.000200172	1.85679	0.00886179	0.00886179
n-Heptane	0.716001	4.43313E-05	1.18855	0.0054775	0.0054775
Toluene	0.326518	0.00174516	0.347601	0.00308144	0.00308144

* User Specified Values
? Extrapolated or Approximate Values

Copyright © 2002-2020 BRE Group, Ltd.
Licensed to Esso Exploration, Inc.

Process Streams Report
All Streams
Tabulated by Total Phase

Client Name:	XTO ENERGY INC	Job: DELAWARE DEVELOPMENT
Location:	Cowboy CDP	
Flowsheet:	CDP	

Mass Fraction	17 %	18 %	19 %	20 %	21 %
Octane	0.340552	2.3825E-05	0.717476	0.00296326	0.00296326
Ethylbenzene	0.00629767	4.84942E-05	0.0114168	5.99548E-05	5.99548E-05
m-Xylene	0.0595062	0.000359672	0.122999	0.000554555	0.000554555
Nonane	0.0667812	5.59785E-06	0.171255	0.000590818	0.000590818
Decane	0.0137829	1.25341E-06	0.0407411	0.000107883	0.000107883
Undecanes Plus	7.22487E-07	6.86612E-10	7.20389E-06	2.15043E-08	2.15043E-08

Mass Flow	17 lb/h	18 lb/h	19 lb/h	20 lb/h	21 lb/h
Water	7.61558E-08	61197.6	0.285913	1.96209 *	0.0147452 *
Hydrogen Sulfide	0	0	0	0 *	0 *
Nitrogen, Atomic	3.01899E-07	0.000344593	0.00304948	2.79479E-07 *	2.10029E-09 *
Carbon Dioxide	0.000205907	0.744333	0.170215	0.039496 *	0.000296813 *
Methane	0.000346445	0.0058775	0.0174094	0.000140218 *	1.05374E-06 *
Ethane	0.0263745	0.139258	0.326415	0.00367634 *	2.76277E-05 *
Propane	0.235929	1.35669	4.10519	0.0106594 *	8.01054E-05 *
Isobutane	0.0704637	0.394939	1.57141	0.00172562 *	1.2968E-05 *
Butane	0.183944	1.26828	4.06403	0.00441147 *	3.31523E-05 *
Isopentane	0.0547349	0.349846	1.43042	0.00106719 *	8.01995E-06 *
Pentane	0.0588294	0.284345	1.6605	0.00110292 *	8.28844E-06 *
Cyclopentane	0	0	0	0 *	0 *
i-C6	0.0230099	0.131395	0.698102	0.000443983 *	3.33653E-06 *
n-Hexane	0.01336	0.0627124	0.416591	0.00026305 *	1.97682E-06 *
Methylcyclopentane	0.00914319	0.125286	0.302762	0.000184454 *	1.38617E-06 *
Benzene	0.00415317	0.922989	0.0374033	0.000125315 *	9.41741E-07 *
Cyclohexane	0.0132393	0.383735	0.484517	0.000279346 *	2.09929E-06 *
2,2,4-Trimethylpentane	0	0	0	0 *	0 *
i-C7	0.00461617	0.0267655	0.170425	9.61021E-05 *	7.22208E-07 *
Methylcyclohexane	0.00853751	0.122516	0.305977	0.000179558 *	1.34938E-06 *
n-Heptane	0.00513993	0.0271331	0.195859	0.000110985 *	8.34056E-07 *
Toluene	0.00234397	1.06813	0.0572804	6.24362E-05 *	4.69209E-07 *
Octane	0.00244471	0.0145822	0.118231	6.00418E-05 *	4.51215E-07 *
Ethylbenzene	4.52088E-05	0.029681	0.00188135	1.21481E-06 *	9.12929E-09 *
m-Xylene	0.000427175	0.220138	0.0202688	1.12364E-05 *	8.44418E-08 *
Nonane	0.0004794	0.00342618	0.0282208	1.19712E-05 *	8.99636E-08 *
Decane	9.89431E-05	0.000767153	0.00671364	2.18594E-06 *	1.64273E-08 *
Undecanes Plus	5.18649E-09	4.20243E-07	1.18711E-06	4.35721E-10 *	3.27445E-12 *

Std Vapor Volumetric Flow	17 MMSCFD	18 MMSCFD	19 MMSCFD	20 MMSCFD	21 MMSCFD
Water	3.85006E-11	30.9384	0.000144543	0.000991936 *	7.45441E-06 *
Hydrogen Sulfide	0	0	0	0 *	0 *
Nitrogen, Atomic	1.96304E-10	2.24066E-07	1.98287E-06	1.81726E-10 *	1.36568E-12 *
Carbon Dioxide	4.26117E-08	0.000154037	3.52255E-05	8.17356E-06 *	6.14244E-08 *
Methane	1.96684E-07	3.33677E-06	9.88366E-06	7.96045E-08 *	5.98229E-10 *
Ethane	7.98859E-06	4.218E-05	9.88679E-05	1.11353E-06 *	8.36816E-09 *
Propane	4.87293E-05	0.000280214	0.000847896	2.20162E-06 *	1.65452E-08 *
Isobutane	1.10415E-05	6.1886E-05	0.000246236	2.704E-07 *	2.03206E-09 *
Butane	2.88235E-05	0.000198736	0.000636825	6.91268E-07 *	5.19488E-09 *
Isopentane	6.9094E-06	4.41624E-05	0.000180567	1.34716E-07 *	1.01239E-09 *
Pentane	7.42626E-06	3.58939E-05	0.000209611	1.39226E-07 *	1.04628E-09 *
Cyclopentane	0	0	0	0 *	0 *
i-C6	2.43185E-06	1.38868E-05	7.37803E-05	4.69232E-08 *	3.52628E-10 *
n-Hexane	1.41198E-06	6.62788E-06	4.40282E-05	2.7801E-08 *	2.08925E-10 *
Methylcyclopentane	9.89462E-07	1.35583E-05	3.27644E-05	1.99613E-08 *	1.50009E-10 *
Benzene	4.84247E-07	0.000107618	4.36111E-06	1.46113E-08 *	1.09804E-10 *
Cyclohexane	1.43273E-06	4.15273E-05	5.24338E-05	3.02305E-08 *	2.27182E-10 *
2,2,4-Trimethylpentane	0	0	0	0 *	0 *
i-C7	4.19576E-07	2.43279E-06	1.54903E-05	8.73497E-09 *	6.56434E-11 *
Methylcyclohexane	7.91929E-07	1.13644E-05	2.8382E-05	1.66556E-08 *	1.25167E-10 *

Copyright © 2002-2020 BRE Group, Ltd.
Licensed to Esso Exploration, Inc.

Process Streams Report
All Streams
Tabulated by Total Phase

Client Name:	XTO ENERGY INC	Job: DELAWARE DEVELOPMENT
Location:	Cowboy CDP	
Flowsheet:	CDP	

Std Vapor Volumetric Flow	17 MMSCFD	18 MMSCFD	19 MMSCFD	20 MMSCFD	21 MMSCFD
n-Heptane	4.67182E-07	2.4662E-06	1.78021E-05	1.00878E-08 *	7.58096E-11 *
Toluene	2.31694E-07	0.000105582	5.662E-06	6.17164E-09 *	4.638E-11 *
Octane	1.9492E-07	1.16266E-06	9.42676E-06	4.78723E-09 *	3.59761E-11 *
Ethylbenzene	3.87835E-09	2.54626E-06	1.61396E-07	1.04215E-10 *	7.83178E-13 *
m-Xylene	3.66462E-08	1.88851E-05	1.73881E-06	9.63943E-10 *	7.24404E-12 *
Nonane	3.4043E-08	2.43299E-07	2.004E-06	8.50095E-10 *	6.38847E-12 *
Decane	6.33347E-09	4.91063E-08	4.29748E-07	1.39924E-10 *	1.05153E-12 *
Undecanes Plus	1.77982E-13	1.44213E-11	4.07377E-11	1.49524E-14 *	1.12368E-16 *

Stream Properties

Property	Units	17	18	19	20	21
Temperature	°F	62.7257	90	90 *	95.7977	95.7977
Pressure	psig	-2.76409	0.25	0.25 *	-11.8826	-11.8826
Molecular Weight	lb/lbmol	54.4408	18.0169	55.584	18.3634	18.3634
Molar Flow	lbmol/h	0.0131862	3397.11	0.296467	0.110339	0.000829201
Std Vapor Volumetric Flow	MMSCFD	0.000120095	30.9396	0.0027001	0.00100493	7.55204E-06
Std Liquid Volumetric Flow	sgpm	0.00256492	122.362	0.0564188	0.00411577	3.09301E-05
Net Ideal Gas Heating Value	Btu/ft^3	2819.83	0.101909	2791	11.6554	11.6554
Gross Ideal Gas Heating Value	Btu/ft^3	3055.76	50.4173	3025.02	62.3144	62.3144

Remarks

Copyright © 2002-2020 BRE Group, Ltd.
Licensed to Esso Exploration, Inc.

Process Streams Report
All Streams
Tabulated by Total Phase

Client Name:	XTO ENERGY INC	Job: DELAWARE DEVELOPMENT
Location:	Cowboy CDP	
Flowsheet:	CDP	

Connections

	22	23	24	28	50K Breathing Losses
From Block	MIX-104	Gunbarrel	MIX-105	IFR - 250,000 bbl	--
To Block	--	MIX-105	Slop Oil Tank	--	--

Stream Composition

Mole Fraction	22 %	23 %	24 %	28 %	50K Breathing Losses %
Water	98.7072	0.0774965	0.0347457		0.00238734 *
Hydrogen Sulfide	0	0	0		0 *
Nitrogen, Atomic	1.80835E-05	0.00012747	0.000630722		0 *
Carbon Dioxide	0.813348	0.0143832	0.0157312		0.118592 *
Methane	0.00792141	0.00155507	0.192776		0 *
Ethane	0.110807	0.0924054	2.08153		18.1675 *
Propane	0.219082	2.68387	17.6156		22.8125 *
Isobutane	0.0269074	1.90698	5.39137		8.16261 *
Butane	0.0687878	7.21387	15.6228		22.2868 *
Isopentane	0.0134055	5.02801	5.72354		6.06474 *
Pentane	0.0138543	7.69342	7.33802		6.61884 *
Cyclopentane	0	0	0		0 *
i-C6	0.00466931	6.38068	4.4094		2.35716 *
n-Hexane	0.00276646	5.35943	3.36935		1.40508 *
Methylcyclopentane	0.00198634	3.92733	2.60192		1.01865 *
Benzene	0.00145397	0.544516	1.88324		0.72914 *
Cyclohexane	0.00300822	7.78362	5.1906		1.73388 *
2,2,4-Trimethylpentane	0	0	0		0 *
i-C7	0.000869214	3.83241	2.1476		0.517098 *
Methylcyclohexane	0.00165739	10.1627	5.57877		1.25772 *
n-Heptane	0.00100383	6.35532	3.42415		0.832143 *
Toluene	0.000614138	2.325	2.75216		0.587554 *
Octane	0.000476375	10.3159	5.23574		0.895239 *
Ethylbenzene	1.03704E-05	0.212266	0.142382		0.0225104 *
m-Xylene	9.59216E-05	2.53366	1.54378		0.252976 *
Nonane	8.45926E-05	6.85154	3.40908		0.657541 *
Decane	1.39238E-05	4.40054	2.17526		0.553755 *
Undecanes Plus	1.48791E-09	4.30299	2.11983		2.94549 *

Mass Fraction	22 %	23 %	24 %	28 %	50K Breathing Losses %
Water	96.8359	0.0140164	0.00789661		0.000688756
Hydrogen Sulfide	0	0	0		0
Nitrogen, Atomic	1.37932E-05	1.79249E-05	0.000111448		0
Carbon Dioxide	1.94926	0.00635498	0.00873389		0.0835817
Methane	0.00692023	0.000250459	0.0390142		0
Ethane	0.181439	0.0278953	0.789589		8.74836
Propane	0.526076	1.18815	9.79923		16.1094
Isobutane	0.0851649	1.11276	3.95312		7.5977
Butane	0.217721	4.20944	11.4551		20.7444
Isopentane	0.0526694	3.64199	5.20947		7.00733
Pentane	0.0544327	5.57266	6.67894		7.64755
Cyclopentane	0	0	0		0
i-C6	0.021912	5.52032	4.7936		3.25299
n-Hexane	0.0129824	4.63676	3.66293		1.93907
Methylcyclopentane	0.0091034	3.31829	2.76246		1.3729
Benzene	0.0061847	0.427013	1.85576		0.912092
Cyclohexane	0.0137867	6.57655	5.51087		2.33687
2,2,4-Trimethylpentane	0	0	0		0
i-C7	0.00474296	3.85533	2.71474		0.829774

Copyright © 2002-2020 BRE Group, Ltd.
Licensed to Esso Exploration, Inc.

Process Streams Report
All Streams
Tabulated by Total Phase

Client Name:	XTO ENERGY INC	Job: DELAWARE DEVELOPMENT
Location:	Cowboy CDP	
Flowsheet:	CDP	

Mass Fraction	22 %	23 %	24 %	28 %	50K Breathing Losses %
Methylcyclohexane	0.00886179	10.0178	6.91016		1.97763
n-Heptane	0.0054775	6.39333	4.32841		1.33532
Toluene	0.00308144	2.15069	3.199		0.866962
Octane	0.00296326	11.8302	7.54487		1.63766
Ethylbenzene	5.99548E-05	0.226243	0.190693		0.0382715
m-Xylene	0.000554555	2.7005	2.0676		0.430103
Nonane	0.000590818	8.82219	5.51583		1.35054
Decane	0.000107883	6.28592	3.90444		1.26176
Undecanes Plus	2.15043E-08	11.4653	7.09742		12.519

Mass Flow	22 lb/h	23 lb/h	24 lb/h	28 lb/h	50K Breathing Losses lb/h
Water	1.97684	0.00411036	0.0174883	0	2.71536E-05 *
Hydrogen Sulfide	0	0	0	0	0 *
Nitrogen, Atomic	2.81579E-07	5.25654E-06	0.00024682	0	0 *
Carbon Dioxide	0.0397928	0.00186362	0.0193426	0	0.00329513 *
Methane	0.000141272	7.34478E-05	0.0864033	0	0 *
Ethane	0.00370396	0.00818039	1.74867	0	0.344896 *
Propane	0.0107395	0.348429	21.702	0	0.635099 *
Isobutane	0.00173858	0.326321	8.75483	0	0.299532 *
Butane	0.00444462	1.23443	25.3692	0	0.817829 *
Isopentane	0.00107521	1.06803	11.5372	0	0.276257 *
Pentane	0.00111121	1.6342	14.7916	0	0.301497 *
Cyclopentane	0	0	0	0	0 *
i-C6	0.000447319	1.61885	10.6162	0	0.128246 *
n-Hexane	0.000265027	1.35975	8.11215	0	0.0764461 *
Methylcyclopentane	0.00018584	0.973101	6.11792	0	0.0541253 *
Benzene	0.000126256	0.125223	4.10988	0	0.0359584 *
Cyclohexane	0.000281446	1.9286	12.2047	0	0.0921288 *
2,2,4-Trimethylpentane	0	0	0	0	0 *
i-C7	9.68243E-05	1.13059	6.01222	0	0.0327131 *
Methylcyclohexane	0.000180907	2.93776	15.3037	0	0.0779663 *
n-Heptane	0.000111819	1.87487	9.58597	0	0.0526437 *
Toluene	6.29054E-05	0.630697	7.0847	0	0.0341791 *
Octane	6.0493E-05	3.46926	16.7093	0	0.0645633 *
Ethylbenzene	1.22394E-06	0.0663465	0.42232	0	0.00150882 *
m-Xylene	1.13209E-05	0.79193	4.57902	0	0.0169564 *
Nonane	1.20612E-05	2.58714	12.2157	0	0.0532439 *
Decane	2.20236E-06	1.84337	8.64701	0	0.0497438 *
Undecanes Plus	4.38995E-10	3.36224	15.7184	0	0.493549 *

Std Vapor Volumetric Flow	22 MMSCFD	23 MMSCFD	24 MMSCFD	28 MMSCFD	50K Breathing Losses MMSCFD
Water	0.00099939	2.07799E-06	8.84121E-06	0	1.37275E-08 *
Hydrogen Sulfide	0	0	0	0	0 *
Nitrogen, Atomic	1.83092E-10	3.41798E-09	1.6049E-07	0	0 *
Carbon Dioxide	8.23499E-06	3.8567E-07	4.00289E-06	0	6.81916E-07 *
Methane	8.02027E-08	4.16978E-08	4.90528E-05	0	0 *
Ethane	1.12189E-06	2.47776E-06	0.000529656	0	0.000104466 *
Propane	2.21816E-06	7.19653E-05	0.00448238	0	0.000131175 *
Isobutane	2.72432E-07	5.11338E-05	0.00137186	0	4.6936E-05 *
Butane	6.96463E-07	0.000193433	0.0039753	0	0.000128152 *
Isopentane	1.35728E-07	0.000134821	0.00145639	0	3.4873E-05 *
Pentane	1.40272E-07	0.000206291	0.0018672	0	3.80592E-05 *
Cyclopentane	0	0	0	0	0 *
i-C6	4.72758E-08	0.000171092	0.00112199	0	1.3554E-05 *
n-Hexane	2.80099E-08	0.000143708	0.000857349	0	8.07937E-06 *
Methylcyclopentane	2.01113E-08	0.000105308	0.000662072	0	5.85736E-06 *

Copyright © 2002-2020 BRE Group, Ltd.
Licensed to Esso Exploration, Inc.

Process Streams Report
All Streams
Tabulated by Total Phase

Client Name:	XTO ENERGY INC	Job: DELAWARE DEVELOPMENT
Location:	Cowboy CDP	
Flowsheet:	CDP	

Std Vapor Volumetric Flow	22 MMSCFD	23 MMSCFD	24 MMSCFD	28 MMSCFD	50K Breathing Losses MMSCFD	
Benzene	1.47211E-08	1.46007E-05	0.0004792	0	4.19264E-06	*
Cyclohexane	3.04576E-08	0.00020871	0.00132078	0	9.97005E-06	*
2,2,4-Trimethylpentane	0	0	0	0	0	*
i-C7	8.80062E-09	0.000102762	0.000546467	0	2.97338E-06	*
Methylcyclohexane	1.67808E-08	0.000272503	0.00141955	0	7.23206E-06	*
n-Heptane	1.01636E-08	0.000170412	0.000871294	0	4.78493E-06	*
Toluene	6.21802E-09	6.23426E-05	0.000700302	0	3.37851E-06	*
Octane	4.8232E-09	0.000276609	0.00133226	0	5.14773E-06	*
Ethylbenzene	1.04998E-10	5.69169E-06	3.62297E-05	0	1.29438E-07	*
m-Xylene	9.71187E-10	6.79376E-05	0.000392823	0	1.45465E-06	*
Nonane	8.56483E-10	0.000183717	0.000867458	0	3.78094E-06	*
Decane	1.40976E-10	0.000117996	0.000553506	0	3.18416E-06	*
Undecanes Plus	1.50648E-14	0.00011538	0.000539401	0	1.69369E-05	*

Stream Properties

Property	Units	22	23	24	28	50K Breathing Losses
Temperature	°F	95.7977	90	41.4621		93.1604
Pressure	psig	-11.8826	0.25	0.25	0	-12.6459
Molecular Weight	lb/lbmol	18.3634	99.6062	79.2685		62.4437
Molar Flow	lbmol/h	0.111168	0.294413	2.79387	0	0.0631353
Std Vapor Volumetric Flow	MMSCFD	0.00101248	0.0026814	0.0254455	0	0.000575012
Std Liquid Volumetric Flow	sgpm	0.0041467	0.0818382	0.665171	0	0.0134201
Net Ideal Gas Heating Value	Btu/ft^3	11.6554	4997.11	4005.24		3198.35
Gross Ideal Gas Heating Value	Btu/ft^3	62.3144	5371.39	4312.5		3455.89

Remarks

Copyright © 2002-2020 BRE Group, Ltd.
Licensed to Esso Exploration, Inc.

Process Streams Report
All Streams
Tabulated by Total Phase

Client Name:	XTO ENERGY INC	Job: DELAWARE DEVELOPMENT
Location:	Cowboy CDP	
Flowsheet:	CDP	

Connections

	50k Working Losses	250k Breathing Losses	250k Working Losses		
From Block	--	--	--		
To Block	--	--	--		

Stream Composition

Mole Fraction	50k Working Losses %	250k Breathing Losses %	250k Working Losses %		
Water	0.00238734 *	1.33495 *	1.33495 *		
Hydrogen Sulfide	0 *	0 *	0 *		
Nitrogen, Atomic	0 *	0 *	0 *		
Carbon Dioxide	0.118592 *	0.160231 *	0.160231 *		
Methane	0 *	0 *	0 *		
Ethane	18.1675 *	16.3821 *	16.3821 *		
Propane	22.8125 *	22.5122 *	22.5122 *		
Isobutane	8.16261 *	8.79535 *	8.79535 *		
Butane	22.2868 *	24.1049 *	24.1049 *		
Isopentane	6.06474 *	6.48228 *	6.48228 *		
Pentane	6.61884 *	7.05955 *	7.05955 *		
Cyclopentane	0 *	0 *	0 *		
i-C6	2.35716 *	2.42389 *	2.42389 *		
n-Hexane	1.40508 *	1.36257 *	1.36257 *		
Methylcyclopentane	1.01865 *	1.08948 *	1.08948 *		
Benzene	0.72914 *	0.954669 *	0.954669 *		
Cyclohexane	1.73388 *	1.94511 *	1.94511 *		
2,2,4-Trimethylpentane	0 *	0 *	0 *		
i-C7	0.517098 *	0.486943 *	0.486943 *		
Methylcyclohexane	1.25772 *	1.09843 *	1.09843 *		
n-Heptane	0.832143 *	0.715857 *	0.715857 *		
Toluene	0.587554 *	0.553907 *	0.553907 *		
Octane	0.895239 *	0.588522 *	0.588522 *		
Ethylbenzene	0.0225104 *	0.0144008 *	0.0144008 *		
m-Xylene	0.252976 *	0.158286 *	0.158286 *		
Nonane	0.657541 *	0.337627 *	0.337627 *		
Decane	0.553755 *	0.246742 *	0.246742 *		
Undecanes Plus	2.94549 *	1.19206 *	1.19206 *		

Mass Fraction	50k Working Losses %	250k Breathing Losses %	250k Working Losses %		
Water	0.000688756	0.413104	0.413104		
Hydrogen Sulfide	0	0	0		
Nitrogen, Atomic	0	0	0		
Carbon Dioxide	0.0835817	0.121128	0.121128		
Methane	0	0	0		
Ethane	8.74836	8.4614	8.4614		
Propane	16.1094	17.0516	17.0516		
Isobutane	7.5977	8.78109	8.78109		
Butane	20.7444	24.0658	24.0658		
Isopentane	7.00733	8.0336	8.0336		
Pentane	7.64755	8.74902	8.74902		
Cyclopentane	0	0	0		
i-C6	3.25299	3.58797	3.58797		
n-Hexane	1.93907	2.01696	2.01696		
Methylcyclopentane	1.3729	1.57498	1.57498		
Benzene	0.912092	1.28092	1.28092		
Cyclohexane	2.33687	2.81191	2.81191		

Copyright © 2002-2020 BRE Group, Ltd.
Licensed to Esso Exploration, Inc.

Process Streams Report
All Streams
Tabulated by Total Phase

Client Name:	XTO ENERGY INC	Job: DELAWARE DEVELOPMENT
Location:	Cowboy CDP	
Flowsheet:	CDP	

Mass Fraction	50k Working Losses %	250k Breathing Losses %	250k Working Losses %		
2,2,4-Trimethylpentane	0	0	0		
i-C7	0.829774	0.838123	0.838123		
Methylcyclohexane	1.97763	1.85257	1.85257		
n-Heptane	1.33532	1.23213	1.23213		
Toluene	0.866962	0.87666	0.87666		
Octane	1.63766	1.15476	1.15476		
Ethylbenzene	0.0382715	0.0262617	0.0262617		
m-Xylene	0.430103	0.288654	0.288654		
Nonane	1.35054	0.743815	0.743815		
Decane	1.26176	0.603039	0.603039		
Undecanes Plus	12.519	5.43441	5.43441		

Mass Flow	50k Working Losses lb/h	250k Breathing Losses lb/h	250k Working Losses lb/h		
Water	0	0.0412611 *	0		
Hydrogen Sulfide	0	0 *	0		
Nitrogen, Atomic	0	0 *	0		
Carbon Dioxide	0	0.0120984 *	0		
Methane	0	0 *	0		
Ethane	0	0.845129 *	0		
Propane	0	1.70313 *	0		
Isobutane	0	0.87706 *	0		
Butane	0	2.40371 *	0		
Isopentane	0	0.8024 *	0		
Pentane	0	0.873856 *	0		
Cyclopentane	0	0 *	0		
i-C6	0	0.358369 *	0		
n-Hexane	0	0.201455 *	0		
Methylcyclopentane	0	0.157309 *	0		
Benzene	0	0.127939 *	0		
Cyclohexane	0	0.280855 *	0		
2,2,4-Trimethylpentane	0	0 *	0		
i-C7	0	0.0837122 *	0		
Methylcyclohexane	0	0.185035 *	0		
n-Heptane	0	0.123066 *	0		
Toluene	0	0.0875612 *	0		
Octane	0	0.115338 *	0		
Ethylbenzene	0	0.00262303 *	0		
m-Xylene	0	0.0288309 *	0		
Nonane	0	0.0742926 *	0		
Decane	0	0.0602318 *	0		
Undecanes Plus	0	0.542791 *	0		

Std Vapor Volumetric Flow	50k Working Losses MMSCFD	250k Breathing Losses MMSCFD	250k Working Losses MMSCFD		
Water	0	2.08595E-05 *	0		
Hydrogen Sulfide	0	0 *	0		
Nitrogen, Atomic	0	0 *	0		
Carbon Dioxide	0	2.50372E-06 *	0		
Methane	0	0 *	0		
Ethane	0	0.000255981 *	0		
Propane	0	0.000351768 *	0		
Isobutane	0	0.000137433 *	0		
Butane	0	0.000376656 *	0		
Isopentane	0	0.00010129 *	0		

Copyright © 2002-2020 BRE Group, Ltd.
Licensed to Esso Exploration, Inc.

Process Streams Report
All Streams
Tabulated by Total Phase

Client Name:	XTO ENERGY INC	Job: DELAWARE DEVELOPMENT
Location:	Cowboy CDP	
Flowsheet:	CDP	

Std Vapor Volumetric Flow	50k Working Losses MMSCFD	250k Breathing Losses MMSCFD	250k Working Losses MMSCFD		
Pentane	0	0.00011031 *	0		
Cyclopentane	0	0 *	0		
i-C6	0	3.78749E-05 *	0		
n-Hexane	0	2.12912E-05 *	0		
Methylcyclopentane	0	1.70238E-05 *	0		
Benzene	0	1.49173E-05 *	0		
Cyclohexane	0	3.03937E-05 *	0		
2,2,4-Trimethylpentane	0	0 *	0		
i-C7	0	7.60882E-06 *	0		
Methylcyclohexane	0	1.71637E-05 *	0		
n-Heptane	0	1.11858E-05 *	0		
Toluene	0	8.65517E-06 *	0		
Octane	0	9.19605E-06 *	0		
Ethylbenzene	0	2.25023E-07 *	0		
m-Xylene	0	2.47333E-06 *	0		
Nonane	0	5.27565E-06 *	0		
Decane	0	3.85551E-06 *	0		
Undecanes Plus	0	1.86267E-05 *	0		

Stream Properties

Property	Units	50k Working Losses	250k Breathing Losses	250k Working Losses		
Temperature	°F	93.1604	93.7973	93.7973		
Pressure	psig		43.9615			
Molecular Weight	lb/lbmol	62.4437	58.2165	58.2165		
Molar Flow	lbmol/h	0	0.171567	0		
Std Vapor Volumetric Flow	MMSCFD	0	0.00156257	0		
Std Liquid Volumetric Flow	sgpm	0	0.034682	0		
Net Ideal Gas Heating Value	Btu/ft^3	3198.35	2979.95	2979.95		
Gross Ideal Gas Heating Value	Btu/ft^3	3455.89	3224.06	3224.06		

Remarks

Copyright © 2002-2020 BRE Group, Ltd.
Licensed to Esso Exploration, Inc.

User Value Sets Report

Client Name:	XTO ENERGY INC	Job: DELAWARE DEVELOPMENT	
Location:	Cowboy CDP		

250,000 bbl IFR

User Value [BlockReady]

* Parameter	1	Upper Bound	
Lower Bound		* Enforce Bounds	False

User Value [ShellLength]

* Parameter	54 ft	Upper Bound	ft
Lower Bound	ft	* Enforce Bounds	False

User Value [ShellDiam]

* Parameter	200 ft	Upper Bound	ft
Lower Bound	ft	* Enforce Bounds	False

User Value [BreatherVP]

* Parameter	0.03 psig	Upper Bound	psig
Lower Bound	psig	* Enforce Bounds	False

User Value [BreatherVacP]

* Parameter	-0.03 psig	Upper Bound	psig
Lower Bound	psig	* Enforce Bounds	False

User Value [DomeRadius]

Parameter	ft	Upper Bound	ft
Lower Bound	ft	* Enforce Bounds	False

User Value [OpPress]

* Parameter	0 psig	Upper Bound	psig
Lower Bound	psig	* Enforce Bounds	False

User Value [AvgPercentLiq]

* Parameter	50 %	Upper Bound	%
Lower Bound	%	* Enforce Bounds	False

User Value [MaxPercentLiq]

* Parameter	90 %	Upper Bound	%
Lower Bound	%	* Enforce Bounds	False

User Value [MinPercentLiq]

* Parameter	10 %	Upper Bound	%
Lower Bound	%	* Enforce Bounds	False

User Value [AnnNetTP]

* Parameter	403674 bbl/day	Upper Bound	bbl/day
Lower Bound	bbl/day	* Enforce Bounds	False

User Value [OREff]

Parameter	%	Upper Bound	%
Lower Bound	%	* Enforce Bounds	False

User Value [MaxAvgT]

* Parameter	75.8 °F	Upper Bound	°F
Lower Bound	°F	* Enforce Bounds	False

User Value [MinAvgT]

* Parameter	47.6 °F	Upper Bound	°F
Lower Bound	°F	* Enforce Bounds	False

Copyright © 2002-2020 BRE Group, Ltd.
Licensed to Esso Exploration, Inc.

User Value Sets Report

Client Name:	XTO ENERGY INC	Job: DELAWARE DEVELOPMENT	
Location:	Cowboy CDP		

User Value [BulkLiqT]

* Parameter	90	°F	Upper Bound		°F
Lower Bound		°F	* Enforce Bounds	False	

User Value [AvgP]

* Parameter	12.88	psia	Upper Bound		psia
Lower Bound		psia	* Enforce Bounds	False	

User Value [Therml]

* Parameter	1722	Btu/ft^2/day	Upper Bound		Btu/ft^2/day
Lower Bound		Btu/ft^2/day	* Enforce Bounds	False	

User Value [AvgWindSpeed]

* Parameter	8.7	mi/h	Upper Bound		mi/h
Lower Bound		mi/h	* Enforce Bounds	False	

User Value [MaxHourlyLoadingRate]

Parameter		bbl/hr	Upper Bound		bbl/hr
Lower Bound		bbl/hr	* Enforce Bounds	False	

User Value [SumLiqLevelInc]

Parameter		ft/yr	Upper Bound		ft/yr
Lower Bound		ft/yr	* Enforce Bounds	False	

User Value [FlashingT]

* Parameter	93.7973	°F	Upper Bound		°F
Lower Bound		°F	* Enforce Bounds	False	

User Value [EntrainedOilFrac]

* Parameter	1	%	Upper Bound		%
Lower Bound		%	* Enforce Bounds	False	

User Value [TurnoverRate]

Parameter			Upper Bound		
Lower Bound			* Enforce Bounds	False	

User Value [LLossSatFactor]

Parameter			Upper Bound		
Lower Bound			* Enforce Bounds	False	

User Value [AtmPressure]

* Parameter	12.88	psia	Upper Bound		psia
Lower Bound		psia	* Enforce Bounds	False	

User Value [TVP]

* Parameter	7.55641	psia	Upper Bound		psia
Lower Bound		psia	* Enforce Bounds	False	

User Value [MaxVP]

* Parameter	8.62239	psia	Upper Bound		psia
Lower Bound		psia	* Enforce Bounds	False	

User Value [MinVP]

* Parameter	6.59741	psia	Upper Bound		psia

Copyright © 2002-2020 BRE Group, Ltd.
Licensed to Esso Exploration, Inc.

User Value Sets Report

Client Name:	XTO ENERGY INC	Job: DELAWARE DEVELOPMENT
Location:	Cowboy CDP	

User Value [MinVP]

Lower Bound	psia	* Enforce Bounds	False

User Value [AvgLiqSurfaceT]

* Parameter	84.8626 °F	Upper Bound	°F
Lower Bound	°F	* Enforce Bounds	False

User Value [MaxLiqSurfaceT]

* Parameter	93.7973 °F	Upper Bound	°F
Lower Bound	°F	* Enforce Bounds	False

User Value [TotalLosses]

* Parameter	39.7748 ton/yr	Upper Bound	ton/yr
Lower Bound	ton/yr	* Enforce Bounds	False

User Value [WorkingLosses]

* Parameter	0 ton/yr	Upper Bound	ton/yr
Lower Bound	ton/yr	* Enforce Bounds	False

User Value [StandingLosses]

* Parameter	0 ton/yr	Upper Bound	ton/yr
Lower Bound	ton/yr	* Enforce Bounds	False

User Value [RimSealLosses]

* Parameter	0.642122 ton/yr	Upper Bound	ton/yr
Lower Bound	ton/yr	* Enforce Bounds	False

User Value [WithdrawalLoss]

* Parameter	0.95234 ton/yr	Upper Bound	ton/yr
Lower Bound	ton/yr	* Enforce Bounds	False

User Value [LoadingLosses]

* Parameter	0 ton/yr	Upper Bound	ton/yr
Lower Bound	ton/yr	* Enforce Bounds	False

User Value [MaxHourlyLoadingLoss]

* Parameter	0 ton/yr	Upper Bound	ton/yr
Lower Bound	ton/yr	* Enforce Bounds	False

User Value [PStar]

* Parameter	0.217358	Upper Bound	
Lower Bound		* Enforce Bounds	False

User Value [AllCTotalLosses]

* Parameter	43.7476 ton/yr	Upper Bound	ton/yr
Lower Bound	ton/yr	* Enforce Bounds	False

User Value [AllCLoadingLosses]

* Parameter	0 ton/yr	Upper Bound	ton/yr
Lower Bound	ton/yr	* Enforce Bounds	False

User Value [AllCMaxHLoadingLoss]

* Parameter	0 lb/hr	Upper Bound	lb/hr
Lower Bound	lb/hr	* Enforce Bounds	False

Copyright © 2002-2020 BRE Group, Ltd.
Licensed to Esso Exploration, Inc.

User Value Sets Report

Client Name:	XTO ENERGY INC	Job: DELAWARE DEVELOPMENT
Location:	Cowboy CDP	

User Value [AllCFlashingLosses]

* Parameter	0	ton/yr	Upper Bound	ton/yr
Lower Bound		ton/yr	* Enforce Bounds	False

User Value [DeckFittingLosses]

* Parameter	8.34925	ton/yr	Upper Bound	ton/yr
Lower Bound		ton/yr	* Enforce Bounds	False

User Value [DeckSeamLosses]

* Parameter	0	ton/yr	Upper Bound	ton/yr
Lower Bound		ton/yr	* Enforce Bounds	False

User Value [FlashingLosses]

* Parameter	0	ton/yr	Upper Bound	ton/yr
Lower Bound		ton/yr	* Enforce Bounds	False

User Value [TotalResidual]

* Parameter	2.01031E+07	ton/yr	Upper Bound	ton/yr
Lower Bound		ton/yr	* Enforce Bounds	False

User Value [GasMoleWeight]

* Parameter	0.0546728	kg/mol	Upper Bound	kg/mol
Lower Bound		kg/mol	* Enforce Bounds	False

User Value [VapReportableFrac]

* Parameter	90.0572	%	Upper Bound	%
Lower Bound		%	* Enforce Bounds	False

User Value [LiqReportableFrac]

* Parameter	99.9468	%	Upper Bound	%
Lower Bound		%	* Enforce Bounds	False

User Value [FlashReportableFrac]

* Parameter	0	%	Upper Bound	%
Lower Bound		%	* Enforce Bounds	False

Remarks
This User Value Set was programmatically generated. GUID={CFA0C56F-0FE1-4BD3-9B19-F90422E69E23}

50,000 bbl IFR

User Value [BlockReady]

* Parameter	1		Upper Bound	
Lower Bound			* Enforce Bounds	False

User Value [ShellLength]

* Parameter	44	ft	Upper Bound	ft
Lower Bound		ft	* Enforce Bounds	False

User Value [ShellDiam]

* Parameter	100	ft	Upper Bound	ft
Lower Bound		ft	* Enforce Bounds	False

Copyright © 2002-2020 BRE Group, Ltd.
Licensed to Esso Exploration, Inc.

User Value Sets Report

Client Name:	XTO ENERGY INC	Job: DELAWARE DEVELOPMENT	
Location:	Cowboy CDP		

User Value [BreatherVP]

* Parameter	0.03	psig	Upper Bound	psig
Lower Bound		psig	* Enforce Bounds	False

User Value [BreatherVacP]

* Parameter	-0.03	psig	Upper Bound	psig
Lower Bound		psig	* Enforce Bounds	False

User Value [DomeRadius]

Parameter		ft	Upper Bound	ft
Lower Bound		ft	* Enforce Bounds	False

User Value [OpPress]

* Parameter	0	psig	Upper Bound	psig
Lower Bound		psig	* Enforce Bounds	False

User Value [AvgPercentLiq]

* Parameter	50	%	Upper Bound	%
Lower Bound		%	* Enforce Bounds	False

User Value [MaxPercentLiq]

* Parameter	90	%	Upper Bound	%
Lower Bound		%	* Enforce Bounds	False

User Value [MinPercentLiq]

* Parameter	10	%	Upper Bound	%
Lower Bound		%	* Enforce Bounds	False

User Value [AnnNetTP]

* Parameter	201754	bbl/day	Upper Bound	bbl/day
Lower Bound		bbl/day	* Enforce Bounds	False

User Value [OREff]

Parameter		%	Upper Bound	%
Lower Bound		%	* Enforce Bounds	False

User Value [MaxAvgT]

* Parameter	75.8	°F	Upper Bound	°F
Lower Bound		°F	* Enforce Bounds	False

User Value [MinAvgT]

* Parameter	47.6	°F	Upper Bound	°F
Lower Bound		°F	* Enforce Bounds	False

User Value [BulkLiqT]

* Parameter	90	°F	Upper Bound	°F
Lower Bound		°F	* Enforce Bounds	False

User Value [AvgP]

* Parameter	12.88	psia	Upper Bound	psia
Lower Bound		psia	* Enforce Bounds	False

User Value [Therml]

* Parameter	1722	Btu/ft^2/day	Upper Bound	Btu/ft^2/day
Lower Bound		Btu/ft^2/day	* Enforce Bounds	False

Copyright © 2002-2020 BRE Group, Ltd.
Licensed to Esso Exploration, Inc.

User Value Sets Report

Client Name:	XTO ENERGY INC	Job: DELAWARE DEVELOPMENT
Location:	Cowboy CDP	

User Value [AvgWindSpeed]

* Parameter	8.7	mi/h	Upper Bound	mi/h
Lower Bound		mi/h	* Enforce Bounds	False

User Value [MaxHourlyLoadingRate]

Parameter		bbl/hr	Upper Bound	bbl/hr
Lower Bound		bbl/hr	* Enforce Bounds	False

User Value [SumLiqLevelInc]

Parameter		ft/yr	Upper Bound	ft/yr
Lower Bound		ft/yr	* Enforce Bounds	False

User Value [FlashingT]

* Parameter	93.1604	°F	Upper Bound	°F
Lower Bound		°F	* Enforce Bounds	False

User Value [EntrainedOilFrac]

* Parameter	1	%	Upper Bound	%
Lower Bound		%	* Enforce Bounds	False

User Value [TurnoverRate]

Parameter			Upper Bound	
Lower Bound			* Enforce Bounds	False

User Value [LLossSatFactor]

Parameter			Upper Bound	
Lower Bound			* Enforce Bounds	False

User Value [AtmPressure]

* Parameter	12.88	psia	Upper Bound	psia
Lower Bound		psia	* Enforce Bounds	False

User Value [TVP]

* Parameter	7.83208	psia	Upper Bound	psia
Lower Bound		psia	* Enforce Bounds	False

User Value [MaxVP]

* Parameter	9.0794	psia	Upper Bound	psia
Lower Bound		psia	* Enforce Bounds	False

User Value [MinVP]

* Parameter	6.794	psia	Upper Bound	psia
Lower Bound		psia	* Enforce Bounds	False

User Value [AvgLiqSurfaceT]

* Parameter	84.1464	°F	Upper Bound	°F
Lower Bound		°F	* Enforce Bounds	False

User Value [MaxLiqSurfaceT]

* Parameter	93.1604	°F	Upper Bound	°F
Lower Bound		°F	* Enforce Bounds	False

User Value [TotalLosses]

* Parameter	15.7039	ton/yr	Upper Bound	ton/yr

Copyright © 2002-2020 BRE Group, Ltd.
Licensed to Esso Exploration, Inc.

User Value Sets Report

Client Name:	XTO ENERGY INC	Job: DELAWARE DEVELOPMENT
Location:	Cowboy CDP	

User Value [TotalLosses]

Lower Bound		ton/yr	* Enforce Bounds	False

User Value [WorkingLosses]

* Parameter	0	ton/yr	Upper Bound	ton/yr
Lower Bound		ton/yr	* Enforce Bounds	False

User Value [StandingLosses]

* Parameter	0	ton/yr	Upper Bound	ton/yr
Lower Bound		ton/yr	* Enforce Bounds	False

User Value [RimSealLosses]

* Parameter	0.327887	ton/yr	Upper Bound	ton/yr
Lower Bound		ton/yr	* Enforce Bounds	False

User Value [WithdrawalLoss]

* Parameter	0.866185	ton/yr	Upper Bound	ton/yr
Lower Bound		ton/yr	* Enforce Bounds	False

User Value [LoadingLosses]

* Parameter	0	ton/yr	Upper Bound	ton/yr
Lower Bound		ton/yr	* Enforce Bounds	False

User Value [MaxHourlyLoadingLoss]

* Parameter	0	lb/hr	Upper Bound	lb/hr
Lower Bound		lb/hr	* Enforce Bounds	False

User Value [PStar]

* Parameter	0.229986		Upper Bound	
Lower Bound			* Enforce Bounds	False

User Value [AllCTotalLosses]

* Parameter	17.2677	ton/yr	Upper Bound	ton/yr
Lower Bound		ton/yr	* Enforce Bounds	False

User Value [AllCLoadingLosses]

* Parameter	0	ton/yr	Upper Bound	ton/yr
Lower Bound		ton/yr	* Enforce Bounds	False

User Value [AllCMaxHLoadingLoss]

* Parameter	0	lb/hr	Upper Bound	lb/hr
Lower Bound		lb/hr	* Enforce Bounds	False

User Value [AllCFlashingLosses]

* Parameter	0	ton/yr	Upper Bound	ton/yr
Lower Bound		ton/yr	* Enforce Bounds	False

User Value [DeckFittingLosses]

* Parameter	2.7319	ton/yr	Upper Bound	ton/yr
Lower Bound		ton/yr	* Enforce Bounds	False

User Value [DeckSeamLosses]

* Parameter	0	ton/yr	Upper Bound	ton/yr
Lower Bound		ton/yr	* Enforce Bounds	False

Copyright © 2002-2020 BRE Group, Ltd.
Licensed to Esso Exploration, Inc.

User Value Sets Report

Client Name:	XTO ENERGY INC	Job: DELAWARE DEVELOPMENT	
Location:	Cowboy CDP		

User Value [FlashingLosses]

* Parameter	0	ton/yr	Upper Bound	ton/yr
Lower Bound		ton/yr	* Enforce Bounds	False

User Value [TotalResidual]

* Parameter	1.00516E+07	ton/yr	Upper Bound	ton/yr
Lower Bound		ton/yr	* Enforce Bounds	False

User Value [GasMoleWeight]

* Parameter	0.0535878	kg/mol	Upper Bound	kg/mol
Lower Bound		kg/mol	* Enforce Bounds	False

User Value [VapReportableFrac]

* Parameter	88.682	%	Upper Bound	%
Lower Bound		%	* Enforce Bounds	False

User Value [LiqReportableFrac]

* Parameter	99.9468	%	Upper Bound	%
Lower Bound		%	* Enforce Bounds	False

User Value [FlashReportableFrac]

* Parameter	0	%	Upper Bound	%
Lower Bound		%	* Enforce Bounds	False

Remarks
This User Value Set was programmatically generated. GUID={13247DA9-F751-4F54-8D55-E8BE0B5B85F5}

PW Tank

User Value [BlockReady]

* Parameter	1		Upper Bound	
Lower Bound			* Enforce Bounds	False

User Value [ShellLength]

* Parameter	24	ft	Upper Bound	ft
Lower Bound		ft	* Enforce Bounds	False

User Value [ShellDiam]

* Parameter	15.5	ft	Upper Bound	ft
Lower Bound		ft	* Enforce Bounds	False

User Value [BreatherVP]

* Parameter	0.03	psig	Upper Bound	psig
Lower Bound		psig	* Enforce Bounds	False

User Value [BreatherVacP]

* Parameter	-0.03	psig	Upper Bound	psig
Lower Bound		psig	* Enforce Bounds	False

User Value [DomeRadius]

Parameter		ft	Upper Bound	ft
Lower Bound		ft	* Enforce Bounds	False

Copyright © 2002-2020 BRE Group, Ltd.
Licensed to Esso Exploration, Inc.

User Value Sets Report

Client Name:	XTO ENERGY INC	Job: DELAWARE DEVELOPMENT	
Location:	Cowboy CDP		

User Value [OpPress]

* Parameter	0	psig	Upper Bound	psig
Lower Bound		psig	* Enforce Bounds	False

User Value [AvgPercentLiq]

* Parameter	50	%	Upper Bound	%
Lower Bound		%	* Enforce Bounds	False

User Value [MaxPercentLiq]

* Parameter	90	%	Upper Bound	%
Lower Bound		%	* Enforce Bounds	False

User Value [MinPercentLiq]

* Parameter	10	%	Upper Bound	%
Lower Bound		%	* Enforce Bounds	False

User Value [AnnNetTP]

* Parameter	4208.22	bbl/day	Upper Bound	bbl/day
Lower Bound		bbl/day	* Enforce Bounds	False

User Value [OREff]

Parameter		%	Upper Bound	%
Lower Bound		%	* Enforce Bounds	False

User Value [MaxAvgT]

* Parameter	75.8	°F	Upper Bound	°F
Lower Bound		°F	* Enforce Bounds	False

User Value [MinAvgT]

* Parameter	47.6	°F	Upper Bound	°F
Lower Bound		°F	* Enforce Bounds	False

User Value [BulkLiqT]

* Parameter	90	°F	Upper Bound	°F
Lower Bound		°F	* Enforce Bounds	False

User Value [AvgP]

* Parameter	12.88	psia	Upper Bound	psia
Lower Bound		psia	* Enforce Bounds	False

User Value [Therml]

* Parameter	1722	Btu/ft^2/day	Upper Bound	Btu/ft^2/day
Lower Bound		Btu/ft^2/day	* Enforce Bounds	False

User Value [AvgWindSpeed]

* Parameter	8.7	mi/h	Upper Bound	mi/h
Lower Bound		mi/h	* Enforce Bounds	False

User Value [MaxHourlyLoadingRate]

Parameter		bbl/hr	Upper Bound	bbl/hr
Lower Bound		bbl/hr	* Enforce Bounds	False

User Value [SumLiqLevelInc]

Parameter		ft/yr	Upper Bound	ft/yr
Lower Bound		ft/yr	* Enforce Bounds	False

Copyright © 2002-2020 BRE Group, Ltd.
Licensed to Esso Exploration, Inc.

User Value Sets Report

Client Name:	XTO ENERGY INC	Job: DELAWARE DEVELOPMENT
Location:	Cowboy CDP	

User Value [FlashingT]

* Parameter	88.53	°F	Upper Bound	°F
Lower Bound		°F	* Enforce Bounds	False

User Value [EntrainedOilFrac]

* Parameter	1	%	Upper Bound	%
Lower Bound		%	* Enforce Bounds	False

User Value [TurnoverRate]

* Parameter	1190.09		Upper Bound	
Lower Bound			* Enforce Bounds	False

User Value [LLossSatFactor]

Parameter			Upper Bound	
Lower Bound			* Enforce Bounds	False

User Value [AtmPressure]

* Parameter	12.88	psia	Upper Bound	psia
Lower Bound		psia	* Enforce Bounds	False

User Value [TVP]

* Parameter	11.7431	psia	Upper Bound	psia
Lower Bound		psia	* Enforce Bounds	False

User Value [MaxVP]

* Parameter	13.1971	psia	Upper Bound	psia
Lower Bound		psia	* Enforce Bounds	False

User Value [MinVP]

* Parameter	10.3645	psia	Upper Bound	psia
Lower Bound		psia	* Enforce Bounds	False

User Value [AvgLiqSurfaceT]

* Parameter	81.2532	°F	Upper Bound	°F
Lower Bound		°F	* Enforce Bounds	False

User Value [MaxLiqSurfaceT]

* Parameter	90.5103	°F	Upper Bound	°F
Lower Bound		°F	* Enforce Bounds	False

User Value [TotalLosses]

* Parameter	15.8341	ton/yr	Upper Bound	ton/yr
Lower Bound		ton/yr	* Enforce Bounds	False

User Value [WorkingLosses]

* Parameter	7.74155	ton/yr	Upper Bound	ton/yr
Lower Bound		ton/yr	* Enforce Bounds	False

User Value [StandingLosses]

* Parameter	0.175506	ton/yr	Upper Bound	ton/yr
Lower Bound		ton/yr	* Enforce Bounds	False

User Value [RimSealLosses]

* Parameter	0	ton/yr	Upper Bound	ton/yr

Copyright © 2002-2020 BRE Group, Ltd.
Licensed to Esso Exploration, Inc.

User Value Sets Report

Client Name:	XTO ENERGY INC	Job: DELAWARE DEVELOPMENT
Location:	Cowboy CDP	

User Value [RimSealLosses]

Lower Bound		ton/yr	* Enforce Bounds		False

User Value [WithdrawalLoss]

* Parameter	0	ton/yr	Upper Bound		ton/yr
Lower Bound		ton/yr	* Enforce Bounds		False

User Value [LoadingLosses]

* Parameter	0	ton/yr	Upper Bound		ton/yr
Lower Bound		ton/yr	* Enforce Bounds		False

User Value [MaxHourlyLoadingLoss]

* Parameter	0	lb/hr	Upper Bound		lb/hr
Lower Bound		lb/hr	* Enforce Bounds		False

User Value [PStar]

Parameter			Upper Bound		
Lower Bound			* Enforce Bounds		False

User Value [AllCTotalLosses]

* Parameter	26.8499	ton/yr	Upper Bound		ton/yr
Lower Bound		ton/yr	* Enforce Bounds		False

User Value [AllCLoadingLosses]

* Parameter	0	ton/yr	Upper Bound		ton/yr
Lower Bound		ton/yr	* Enforce Bounds		False

User Value [AllCMaxHLoadingLoss]

* Parameter	0	lb/hr	Upper Bound		lb/hr
Lower Bound		lb/hr	* Enforce Bounds		False

User Value [AllCFlashingLosses]

* Parameter	7.88134	ton/yr	Upper Bound		ton/yr
Lower Bound		ton/yr	* Enforce Bounds		False

User Value [DeckFittingLosses]

* Parameter	0	ton/yr	Upper Bound		ton/yr
Lower Bound		ton/yr	* Enforce Bounds		False

User Value [DeckSeamLosses]

* Parameter	0	ton/yr	Upper Bound		ton/yr
Lower Bound		ton/yr	* Enforce Bounds		False

User Value [FlashingLosses]

* Parameter	7.50362	ton/yr	Upper Bound		ton/yr
Lower Bound		ton/yr	* Enforce Bounds		False

User Value [TotalResidual]

* Parameter	268044	ton/yr	Upper Bound		ton/yr
Lower Bound		ton/yr	* Enforce Bounds		False

User Value [GasMoleWeight]

* Parameter	0.0558636	kg/mol	Upper Bound		kg/mol
Lower Bound		kg/mol	* Enforce Bounds		False

Copyright © 2002-2020 BRE Group, Ltd.
Licensed to Esso Exploration, Inc.

User Value Sets Report

Client Name:	XTO ENERGY INC	Job: DELAWARE DEVELOPMENT
Location:	Cowboy CDP	

User Value [VapReportableFrac]

* Parameter	58.9727	%	Upper Bound	%
Lower Bound		%	* Enforce Bounds	False

User Value [LiqReportableFrac]

* Parameter	0.0083005	%	Upper Bound	%
Lower Bound		%	* Enforce Bounds	False

User Value [FlashReportableFrac]

* Parameter	95.2074	%	Upper Bound	%
Lower Bound		%	* Enforce Bounds	False

Remarks
This User Value Set was programmatically generated. GUID={082405F5-A366-4675-9A8D-58EDC57A60E6}

Gunbarrel Tank

User Value [BlockReady]

* Parameter	1		Upper Bound	
Lower Bound			* Enforce Bounds	False

User Value [ShellLength]

* Parameter	30	ft	Upper Bound	ft
Lower Bound		ft	* Enforce Bounds	False

User Value [ShellDiam]

* Parameter	15.5	ft	Upper Bound	ft
Lower Bound		ft	* Enforce Bounds	False

User Value [BreatherVP]

* Parameter	0.03	psig	Upper Bound	psig
Lower Bound		psig	* Enforce Bounds	False

User Value [BreatherVacP]

* Parameter	-0.03	psig	Upper Bound	psig
Lower Bound		psig	* Enforce Bounds	False

User Value [DomeRadius]

Parameter		ft	Upper Bound	ft
Lower Bound		ft	* Enforce Bounds	False

User Value [OpPress]

* Parameter	0	psig	Upper Bound	psig
Lower Bound		psig	* Enforce Bounds	False

User Value [AvgPercentLiq]

* Parameter	50	%	Upper Bound	%
Lower Bound		%	* Enforce Bounds	False

User Value [MaxPercentLiq]

* Parameter	90	%	Upper Bound	%
Lower Bound		%	* Enforce Bounds	False

Copyright © 2002-2020 BRE Group, Ltd.
Licensed to Esso Exploration, Inc.

User Value Sets Report

Client Name:	XTO ENERGY INC	Job: DELAWARE DEVELOPMENT
Location:	Cowboy CDP	

User Value [MinPercentLiq]

* Parameter	10	%	Upper Bound	%
Lower Bound		%	* Enforce Bounds	False

User Value [AnnNetTP]

* Parameter	4214.98	bbl/day	Upper Bound	bbl/day
Lower Bound		bbl/day	* Enforce Bounds	False

User Value [OREff]

Parameter		%	Upper Bound	%
Lower Bound		%	* Enforce Bounds	False

User Value [MaxAvgT]

* Parameter	75.8	°F	Upper Bound	°F
Lower Bound		°F	* Enforce Bounds	False

User Value [MinAvgT]

* Parameter	47.6	°F	Upper Bound	°F
Lower Bound		°F	* Enforce Bounds	False

User Value [BulkLiqT]

* Parameter	100.001	°F	Upper Bound	°F
Lower Bound		°F	* Enforce Bounds	False

User Value [AvgP]

* Parameter	12.88	psia	Upper Bound	psia
Lower Bound		psia	* Enforce Bounds	False

User Value [Therml]

* Parameter	1722	Btu/ft^2/day	Upper Bound	Btu/ft^2/day
Lower Bound		Btu/ft^2/day	* Enforce Bounds	False

User Value [AvgWindSpeed]

* Parameter	8.7	mi/h	Upper Bound	mi/h
Lower Bound		mi/h	* Enforce Bounds	False

User Value [MaxHourlyLoadingRate]

Parameter		bbl/hr	Upper Bound	bbl/hr
Lower Bound		bbl/hr	* Enforce Bounds	False

User Value [SumLiqLevelInc]

Parameter		ft/yr	Upper Bound	ft/yr
Lower Bound		ft/yr	* Enforce Bounds	False

User Value [FlashingT]

* Parameter	88.14	°F	Upper Bound	°F
Lower Bound		°F	* Enforce Bounds	False

User Value [EntrainedOilFrac]

* Parameter	1	%	Upper Bound	%
Lower Bound		%	* Enforce Bounds	False

User Value [TurnoverRate]

* Parameter	1907.2		Upper Bound	
Lower Bound			* Enforce Bounds	False

Copyright © 2002-2020 BRE Group, Ltd.
Licensed to Esso Exploration, Inc.

User Value Sets Report

Client Name:	XTO ENERGY INC	Job: DELAWARE DEVELOPMENT
Location:	Cowboy CDP	

User Value [LLossSatFactor]

Parameter		Upper Bound	
Lower Bound		* Enforce Bounds	False

User Value [AtmPressure]

* Parameter	12.88	psia	Upper Bound	psia
Lower Bound		psia	* Enforce Bounds	False

User Value [TVP]

* Parameter	0.634148	psia	Upper Bound	psia
Lower Bound		psia	* Enforce Bounds	False

User Value [MaxVP]

* Parameter	0.845449	psia	Upper Bound	psia
Lower Bound		psia	* Enforce Bounds	False

User Value [MinVP]

* Parameter	0.470149	psia	Upper Bound	psia
Lower Bound		psia	* Enforce Bounds	False

User Value [AvgLiqSurfaceT]

* Parameter	86.501	°F	Upper Bound	°F
Lower Bound		°F	* Enforce Bounds	False

User Value [MaxLiqSurfaceT]

* Parameter	95.7977	°F	Upper Bound	°F
Lower Bound		°F	* Enforce Bounds	False

User Value [TotalLosses]

* Parameter	0.0917819	ton/yr	Upper Bound	ton/yr
Lower Bound		ton/yr	* Enforce Bounds	False

User Value [WorkingLosses]

* Parameter	0.0910973	ton/yr	Upper Bound	ton/yr
Lower Bound		ton/yr	* Enforce Bounds	False

User Value [StandingLosses]

* Parameter	0.000684597	ton/yr	Upper Bound	ton/yr
Lower Bound		ton/yr	* Enforce Bounds	False

User Value [RimSealLosses]

* Parameter	0	ton/yr	Upper Bound	ton/yr
Lower Bound		ton/yr	* Enforce Bounds	False

User Value [WithdrawalLoss]

* Parameter	0	ton/yr	Upper Bound	ton/yr
Lower Bound		ton/yr	* Enforce Bounds	False

User Value [LoadingLosses]

* Parameter	0	ton/yr	Upper Bound	ton/yr
Lower Bound		ton/yr	* Enforce Bounds	False

User Value [MaxHourlyLoadingLoss]

* Parameter	0	lb/hr	Upper Bound	lb/hr

Copyright © 2002-2020 BRE Group, Ltd.
Licensed to Esso Exploration, Inc.

User Value Sets Report

Client Name:	XTO ENERGY INC	Job: DELAWARE DEVELOPMENT
Location:	Cowboy CDP	

User Value [MaxHourlyLoadingLoss]

Lower Bound	lb/hr	* Enforce Bounds	False

User Value [PStar]

Parameter		Upper Bound	
Lower Bound		* Enforce Bounds	False

User Value [AllCTotalLosses]

* Parameter	8.94147	ton/yr	Upper Bound	ton/yr
Lower Bound		ton/yr	* Enforce Bounds	False

User Value [AllCLoadingLosses]

* Parameter	0	ton/yr	Upper Bound	ton/yr
Lower Bound		ton/yr	* Enforce Bounds	False

User Value [AllCMaxHLoadingLoss]

* Parameter	0	lb/hr	Upper Bound	lb/hr
Lower Bound		lb/hr	* Enforce Bounds	False

User Value [AllCFlashingLosses]

* Parameter	78.185	ton/yr	Upper Bound	ton/yr
Lower Bound		ton/yr	* Enforce Bounds	False

User Value [DeckFittingLosses]

* Parameter	0	ton/yr	Upper Bound	ton/yr
Lower Bound		ton/yr	* Enforce Bounds	False

User Value [DeckSeamLosses]

* Parameter	0	ton/yr	Upper Bound	ton/yr
Lower Bound		ton/yr	* Enforce Bounds	False

User Value [FlashingLosses]

* Parameter	74.4124	ton/yr	Upper Bound	ton/yr
Lower Bound		ton/yr	* Enforce Bounds	False

User Value [TotalResidual]

* Parameter	268193	ton/yr	Upper Bound	ton/yr
Lower Bound		ton/yr	* Enforce Bounds	False

User Value [GasMoleWeight]

* Parameter	0.0183634	kg/mol	Upper Bound	kg/mol
Lower Bound		kg/mol	* Enforce Bounds	False

User Value [VapReportableFrac]

* Parameter	1.02647	%	Upper Bound	%
Lower Bound		%	* Enforce Bounds	False

User Value [LiqReportableFrac]

* Parameter	0.0568174	%	Upper Bound	%
Lower Bound		%	* Enforce Bounds	False

User Value [FlashReportableFrac]

* Parameter	95.1748	%	Upper Bound	%
Lower Bound		%	* Enforce Bounds	False

Copyright © 2002-2020 BRE Group, Ltd.
Licensed to Esso Exploration, Inc.

User Value Sets Report

Client Name:	XTO ENERGY INC	Job: DELAWARE DEVELOPMENT
Location:	Cowboy CDP	

Remarks
This User Value Set was programmatically generated. GUID={2F7DF83B-EECB-4DC3-B53E-DFB3509E4398}

Slop Tank

User Value [BlockReady]

* Parameter	1		Upper Bound		
Lower Bound			* Enforce Bounds	False	

User Value [ShellLength]

* Parameter	30	ft	Upper Bound		ft
Lower Bound		ft	* Enforce Bounds	False	

User Value [ShellDiam]

* Parameter	15.5	ft	Upper Bound		ft
Lower Bound		ft	* Enforce Bounds	False	

User Value [BreatherVP]

* Parameter	0.03	psig	Upper Bound		psig
Lower Bound		psig	* Enforce Bounds	False	

User Value [BreatherVacP]

* Parameter	-0.03	psig	Upper Bound		psig
Lower Bound		psig	* Enforce Bounds	False	

User Value [DomeRadius]

Parameter		ft	Upper Bound		ft
Lower Bound		ft	* Enforce Bounds	False	

User Value [OpPress]

* Parameter	0	psig	Upper Bound		psig
Lower Bound		psig	* Enforce Bounds	False	

User Value [AvgPercentLiq]

* Parameter	50	%	Upper Bound		%
Lower Bound		%	* Enforce Bounds	False	

User Value [MaxPercentLiq]

* Parameter	90	%	Upper Bound		%
Lower Bound		%	* Enforce Bounds	False	

User Value [MinPercentLiq]

* Parameter	10	%	Upper Bound		%
Lower Bound		%	* Enforce Bounds	False	

User Value [AnnNetTP]

* Parameter	13.5517	bbl/day	Upper Bound		bbl/day
Lower Bound		bbl/day	* Enforce Bounds	False	

User Value [OREff]

Parameter		%	Upper Bound		%
Lower Bound		%	* Enforce Bounds	False	

Copyright © 2002-2020 BRE Group, Ltd.
Licensed to Esso Exploration, Inc.

User Value Sets Report

Client Name:	XTO ENERGY INC	Job: DELAWARE DEVELOPMENT
Location:	Cowboy CDP	

User Value [MaxAvgT]

* Parameter	75.8	°F	Upper Bound	°F
Lower Bound		°F	* Enforce Bounds	False

User Value [MinAvgT]

* Parameter	47.6	°F	Upper Bound	°F
Lower Bound		°F	* Enforce Bounds	False

User Value [BulkLiqT]

* Parameter	41.4621	°F	Upper Bound	°F
Lower Bound		°F	* Enforce Bounds	False

User Value [AvgP]

* Parameter	12.88	psia	Upper Bound	psia
Lower Bound		psia	* Enforce Bounds	False

User Value [Therml]

* Parameter	1722	Btu/ft^2/day	Upper Bound	Btu/ft^2/day
Lower Bound		Btu/ft^2/day	* Enforce Bounds	False

User Value [AvgWindSpeed]

* Parameter	8.7	mi/h	Upper Bound	mi/h
Lower Bound		mi/h	* Enforce Bounds	False

User Value [MaxHourlyLoadingRate]

Parameter		bbl/hr	Upper Bound	bbl/hr
Lower Bound		bbl/hr	* Enforce Bounds	False

User Value [SumLiqLevelInc]

Parameter		ft/yr	Upper Bound	ft/yr
Lower Bound		ft/yr	* Enforce Bounds	False

User Value [FlashingT]

* Parameter	94.12	°F	Upper Bound	°F
Lower Bound		°F	* Enforce Bounds	False

User Value [EntrainedOilFrac]

* Parameter	1	%	Upper Bound	%
Lower Bound		%	* Enforce Bounds	False

User Value [TurnoverRate]

* Parameter	6.13191		Upper Bound	
Lower Bound			* Enforce Bounds	False

User Value [LLossSatFactor]

Parameter			Upper Bound	
Lower Bound			* Enforce Bounds	False

User Value [AtmPressure]

* Parameter	12.88	psia	Upper Bound	psia
Lower Bound		psia	* Enforce Bounds	False

User Value [TVP]

* Parameter	6.7169	psia	Upper Bound	psia
Lower Bound		psia	* Enforce Bounds	False

Copyright © 2002-2020 BRE Group, Ltd.
Licensed to Esso Exploration, Inc.

User Value Sets Report

Client Name:	XTO ENERGY INC	Job: DELAWARE DEVELOPMENT
Location:	Cowboy CDP	

User Value [MaxVP]

* Parameter	7.91403	psia	Upper Bound	psia
Lower Bound		psia	* Enforce Bounds	False

User Value [MinVP]

* Parameter	5.66973	psia	Upper Bound	psia
Lower Bound		psia	* Enforce Bounds	False

User Value [AvgLiqSurfaceT]

* Parameter	53.429	°F	Upper Bound	°F
Lower Bound		°F	* Enforce Bounds	False

User Value [MaxLiqSurfaceT]

* Parameter	62.7257	°F	Upper Bound	°F
Lower Bound		°F	* Enforce Bounds	False

User Value [TotalLosses]

* Parameter	3.02631	ton/yr	Upper Bound	ton/yr
Lower Bound		ton/yr	* Enforce Bounds	False

User Value [WorkingLosses]

* Parameter	0.862389	ton/yr	Upper Bound	ton/yr
Lower Bound		ton/yr	* Enforce Bounds	False

User Value [StandingLosses]

* Parameter	2.16392	ton/yr	Upper Bound	ton/yr
Lower Bound		ton/yr	* Enforce Bounds	False

User Value [RimSealLosses]

* Parameter	0	ton/yr	Upper Bound	ton/yr
Lower Bound		ton/yr	* Enforce Bounds	False

User Value [WithdrawalLoss]

* Parameter	0	ton/yr	Upper Bound	ton/yr
Lower Bound		ton/yr	* Enforce Bounds	False

User Value [LoadingLosses]

* Parameter	0	ton/yr	Upper Bound	ton/yr
Lower Bound		ton/yr	* Enforce Bounds	False

User Value [MaxHourlyLoadingLoss]

* Parameter	0	lb/hr	Upper Bound	lb/hr
Lower Bound		lb/hr	* Enforce Bounds	False

User Value [PStar]

Parameter			Upper Bound	
Lower Bound			* Enforce Bounds	False

User Value [AllCTotalLosses]

* Parameter	3.14425	ton/yr	Upper Bound	ton/yr
Lower Bound		ton/yr	* Enforce Bounds	False

User Value [AllCLoadingLosses]

* Parameter	0	ton/yr	Upper Bound	ton/yr

Copyright © 2002-2020 BRE Group, Ltd.
Licensed to Esso Exploration, Inc.

User Value Sets Report

Client Name:	XTO ENERGY INC	Job: DELAWARE DEVELOPMENT
Location:	Cowboy CDP	

User Value [AllCLoadingLosses]

Lower Bound		ton/yr	* Enforce Bounds	False

User Value [AllCMaxHLoadingLoss]

* Parameter	0	lb/hr	Upper Bound	lb/hr
Lower Bound		lb/hr	* Enforce Bounds	False

User Value [AllCFlashingLosses]

* Parameter	336.07	ton/yr	Upper Bound	ton/yr
Lower Bound		ton/yr	* Enforce Bounds	False

User Value [DeckFittingLosses]

* Parameter	0	ton/yr	Upper Bound	ton/yr
Lower Bound		ton/yr	* Enforce Bounds	False

User Value [DeckSeamLosses]

* Parameter	0	ton/yr	Upper Bound	ton/yr
Lower Bound		ton/yr	* Enforce Bounds	False

User Value [FlashingLosses]

* Parameter	328.071	ton/yr	Upper Bound	ton/yr
Lower Bound		ton/yr	* Enforce Bounds	False

User Value [TotalResidual]

* Parameter	630.808	ton/yr	Upper Bound	ton/yr
Lower Bound		ton/yr	* Enforce Bounds	False

User Value [GasMoleWeight]

* Parameter	0.0544408	kg/mol	Upper Bound	kg/mol
Lower Bound		kg/mol	* Enforce Bounds	False

User Value [VapReportableFrac]

* Parameter	96.249	%	Upper Bound	%
Lower Bound		%	* Enforce Bounds	False

User Value [LiqReportableFrac]

* Parameter	99.9683	%	Upper Bound	%
Lower Bound		%	* Enforce Bounds	False

User Value [FlashReportableFrac]

* Parameter	97.6199	%	Upper Bound	%
Lower Bound		%	* Enforce Bounds	False

Remarks

This User Value Set was programmatically generated. GUID={AF9F264D-5E66-43C1-9EDA-D2E6E736B6AE}

Copyright © 2002-2020 BRE Group, Ltd.
Licensed to Esso Exploration, Inc.

Owner:	XTO	Owner Ref.:	H-16-F700
Purchaser:	Linde Engineering N.A.	Purchaser Ref.:	2110A4YK
Manufacturer:	Tulsa Heaters Midstream	THM Ref.:	MJ18-327
Service:	Regen Gas Heater	Project:	Cowboy Cryo Plant
Number:	1	Location:	New Mexico
SHO Duty:	27.73 MMBTU/ hr	SHO Model:	SHO2500

Guarantees:

NOx	0.0267	Lb/MMBTU	20	ppm
SOx	no quote	Lb/MMBTU	-	ppm
CO	0.0163	Lb/MMBTU	20	ppm
VOC	0.0064	Lb/MMBTU	5	ppm
UHC	0.007	Lb/MMBTU	15	ppm
SPM	0.0128	Lb/MMBTU	15	ppm

			Design Case				Maximum Case			
Heat Release	LHV Basis		35.25	MMBTU/hr			38.77	MMBTU/hr		
	HHV Basis		39.14	MMBTU/hr						
Products of Combus		MW								
	O2	32.00	886	Lbm/ hr			1,083	Lbm/ hr		
	N2 + Ar	28.15	22,517	Lbm/ hr			27,520	Lbm/ hr		
	CO2	44.01	4,051	Lbm/ hr			4,952	Lbm/ hr		
	H2O	18.02	3,490	Lbm/ hr			4,265	Lbm/ hr		
	NOx	46.01	0.85	Lbm/ hr /	20	ppm	0.93	Lbm/ hr /	20	ppm
	SOx	64.06	0.00	Lbm/ hr /	0	ppm	0.00	Lbm/ hr /	0	ppm
	CO	28.01	0.52	Lbm/ hr /	20	ppm	0.57	Lbm/ hr /	20	ppm
	VOC	44.10	0.20	Lbm/ hr /	5	ppm	0.22	Lbm/ hr /	5	ppm
	UHC	16.04	0.22	Lbm/ hr /	15	ppm	0.24	Lbm/ hr /	15	ppm
	SPM		0.40	Lbm/ hr /	15	ppm	0.44	Lbm/ hr /	15	ppm
	Total		30,946	Lbm/ hr			37,821	Lbm/ hr		
Flue Gas Exit Temp.			470	°F						
Flue Gas Exit Velocity			52.3	Ft/sec			57.5	Ft/sec		
Stack Height			27.1	ft			27.1	ft		
Stack ID			32	in			32	in		

NOTE:

THM emissions guarantees applicable between 50-100% of Design Case combustion conditions w/ 15% excess air.

THM emissions guarantees applicable for firebox temperatures above 1100°F.

Emissions above are for Design Case operation with air and fuel in ratio control. Upset conditions, such as operation outside the design, high turndown or start-up are not considered as guaranteed emissions cases.

The Maximum Case is the the specified heat release for the burner purchased. Extra duty is spec'd into the burner to ensure that the burner is never the limiting factor on duty.

revision	date	description	by	chk'd	appv'd

USA Applications

SHO = Superior Quality, Flexibility, Dependability & Modularity

EMISSIONS PERMIT DATA SHEET

AMERICAN ENGINEERING SYSTEM of UNITS

MJ18-327-Emissions-

This document contains confidential information proprietary to THM. This document shall not be used, reproduced or disclosed without the prior written consent of THM.

COMPONENT DESCRIPTION

ITEM	QTY	DESCRIPTION
1	1	CALLIDUS BURNER (ENHANCED IFGR ULTRA LOW NOX CUBL-8W-HC-HZ)
2	2	3/16" PL RADIANT SIDE WALLS – A36
3	1	3/16" PL RADIANT ROOF – A36
4	1	3/16" PL RADIANT FLOOR – A36
5	2	3/16" PL RADIANT END WALL – A36
6	2	3/16" PL CONVECTION SIDE WALL – A36
7	2	3/8" PL CONVECTION TUBE SHEETS – A36
8	2	10 GA. PL RETURN COVERS – A36
9	1	3/16" PL TRANSITION – A36
10	1	32" O.D. x 3/16" PL. STACK – A36
11	1	24" x 24" ACCESS DOOR @ RADIANT END WALL
12		NOT USED
13		LIFTING LUGS (STRAIGHT UP LIFT ONLY) – A36
14		5/8" GALV. HIGH STRENGTH BOLT w/ BEVEL WASHER & HEAVY HEX NUT – A325
15		5/8" GALV. HIGH STRENGTH BOLT w/ HARDENED WASHER & HEAVY HEX NUT – A325
16		5/8" GALV. MACHINE BOLT w/ FLAT WASHER & HEX NUT – A307
17A	1	1 1/2" – 3000# THR'D COUPLING w/ PLUG (CS) w/ 304SS PIPE SLEEVE – SPARE
17B	1	1 1/2" – 3000# THR'D COUPLING w/ PLUG (CS) w/ 304SS PIPE SLEEVE – STACK TEMPERATURE
18A	1	1 1/2" – 3000# THR'D COUPLING w/ PLUG (CS) w/ 304SS PIPE SLEEVE – SPARE
18B	1	1 1/2" – 3000# THR'D COUPLING w/ PLUG (CS) w/ 304SS PIPE SLEEVE – SPARE
19A	1	1 1/2" – 3000# THR'D COUPLING w/ PLUG (CS) w/ 304SS PIPE SLEEVE – FURNACE PRESSURE
19B	1	1 1/2" – 3000# THR'D COUPLING w/ PLUG (CS) w/ 304SS PIPE SLEEVE – SPARE
20		NOT USED
21		NOT USED
22	1	1 1/2" – 3000# THR'D COUPLING w/ PLUG (CS) w/ 304SS PIPE SLEEVE – SPARE
23	2	4" – 150# RFWN FLG w/ BLIND (CS) w/ CS PIPE SLEEVE – SAMPLE PORT
24		NOT USED
25		14 GA. FERRULES – 304SS (@ TUBE SHEET)
26		10 GA. FERRULES – C.S. (@ RETURN COVERS)
27		10 GA. FERRULES – 304SS (@ RADIANT SHELL)
28	1	4" SITE PORT W/ 304SS PIPE SLEEVE (@ RADIANT SHELL)
29	1	THM NAME PLATE (304SS)
30	8	FLEXIBLE TUBE SEALS (SOCK & CLAMP) – SHOP INSTALLED
31		1/2" DIA. GALV MACHINE BOLT w/ FLAT WASHER & HEAVY HEX NUT – A307
32		3/4" GALV. HIGH STRENGTH BOLT w/ HARDENED WASHER & HEAVY HEX NUT – A325
33	1	OUTLET SUPPORT – A36
34	1	COMBUSTION MODULE SKID 5500 W/ CONTROL PANEL

DRAWING LIST

GENERAL ARRANGEMENT, FOUNDATION, & COIL FABRICATION DRAWING LIST IS AS FOLLOWS:
PREFIX ALL DRAWINGS NUMBERS w/ JOB NUMBERS
DRAWING NO. – 1A – GENERAL ARRANGMENT SIDE ELEVATION
DRAWING NO. – 1B – GENERAL ARRANGMENT ELEV. BURNER & TARGET END
DRAWING NO. – 1C – GENERAL ARRANGMENT PLAN VIEW
DRAWING NO. – 1D – REFRACTORY, PAINT, & INST. CONN'S
DRAWING NO. – 2A – ANCHOR BOLT PLAN & FOUNDATION LOADS
DRAWING NO. – 4A – CONVECTION COIL, OUTLET SPOOL & CROSSOVER.
DRAWING NO. – 4B – RADIANT COIL

NOTES:

1. FOR FIELD INSTALLATION SEE THM SUGGESTED ERECTION PROCEDURE FOR SHO HEATERS.

CUSTOMER CONNECTIONS

MARK	SIZE	RATING	TYPE	MATERIAL	SERVICE
N1	10"	600#	RFWN	SA105	PROCESS INLET
N2	10"	600#	RFWN	SA105	PROCESS OUTLET
N3	1 1/2"	3000#	FNPT	SA105	SPARE
N4	4"	150#	RFWN	SA105	SAMPLE PORT
N5	4"	150#	RFWN	SA105	SAMPLE PORT
N6	1 1/2"	3000#	FNPT	SA105	TEMPERATURE CONNECTION
N7	1 1/2"	3000#	FNPT	SA105	SPARE
N8	1 1/2"	3000#	FNPT	SA105	SPARE
N9	1 1/2"	3000#	FNPT	SA105	SPARE
N10	1 1/2"	3000#	FNPT	SA105	SPARE
N11	1 1/2"	3000#	FNPT	SA105	FURNACE PRESSURE
N12	1 1/2"	900#	RFWN	SA105	SPARE CONNECTION
N13	1 1/2"	900#	RFWN	SA105	P.I. CONNECTION
N14	1 1/2"	900#	RFWN	SA105	SPARE CONNECTION
N15	1 1/2"	900#	RFWN	SA105	SPARE CONNECTION
N16	1/2"	150#	RF	SA105	FUEL GAS VENT

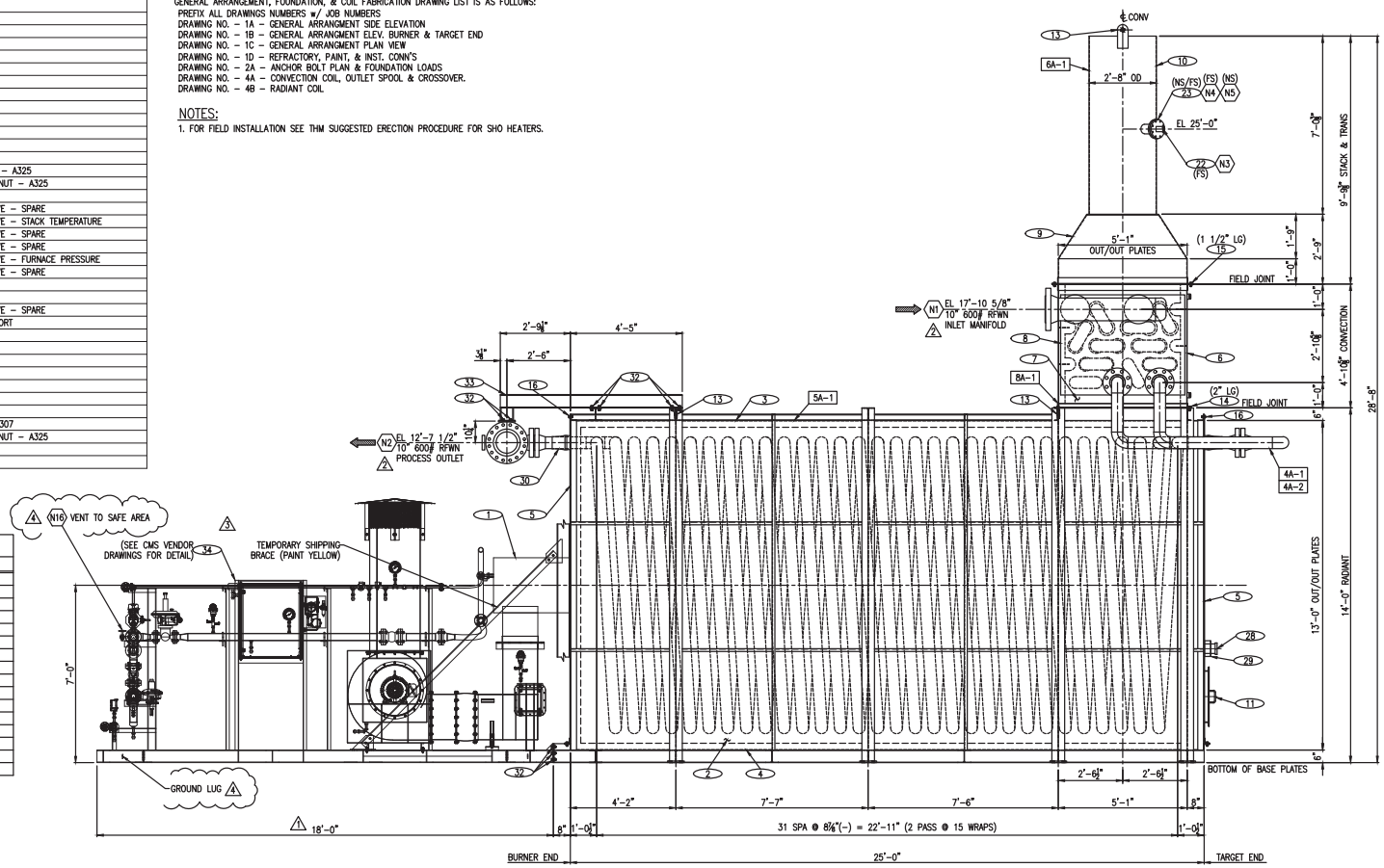

SIDE ELEVATION

PROPRIETARY INFORMATION
The information and designs shown herein, including all patented and patentable features are the property of, proprietary and confidential to TULSA HEATERS MIDSTREAM LLC.
This document shall not be reproduced in whole or part, or disclosed to any third party without the express written consent of TULSA HEATERS MIDSTREAM LLC. All copies of this document, printed or electronic, are null and void if modified or altered in any way. Only TULSA HEATERS MIDSTREAM LLC possesses the controlling document in its original state and shall govern over any copy, printed or electronic.

Customer:
LINDE ENGINEERING NA
XTO

LOCATION : NEW MEXICO
UNIT : N/A
SERVICE : REGEN GAS HEATER
EQUIPMENT No. : H-3132
P.O. No. : 004 2DA64:0
SHO : 2500

Rev.	Date	By	Revision Description
1	5/2:.	SDB	REV ADDED CMS
2	7/23	SDB	REV PER CUSTOMER COMMENTS
3	11/22	SDB	REV CMS
4	1/7/1:.	RU	REV PER CUSTOMER COMMENTS

THM TULSA HEATERS MIDSTREAM

Title: GENERAL ARRANGEMENT SIDE ELEV

Drawn By: JRW	Date: 4/14/18	Job No.: MJ18-327	
Checked By: ASW	Date: 4/18/18	Drawing No.: MJ18327-1A	Rev.: 4
Approved By	Certified By		

Owner:	XTO Energy	Owner Ref.:	PK-6010
Purchaser:	Audubon	Purchaser Ref.:	018193001
Manufacturer:	Tulsa Heaters Midstream	THM Ref.:	MJ18-346
Service:	Hot Oil Heater	Project:	Cowboy CDP
Number:	1	Location:	Carlsbad, NM
SHO Duty:	50.00 MMBTU/ hr	SHO Model:	SHO5000

Guarantees:

NOx	0.0067	Lb/MMBTU	5	ppm
SOx	no quote	Lb/MMBTU	-	ppm
CO	0.0163	Lb/MMBTU	20	ppm
VOC	0.0064	Lb/MMBTU	5	ppm
UHC	0.007	Lb/MMBTU	15	ppm
SPM	0.0134	Lb/MMBTU	15	ppm

			Design Case				Maximum Case			
Heat Release	LHV Basis		58.93	MMBTU/hr			64.83	MMBTU/hr		
Products of Combustion										
		MW								
	O2	32.00	1,578	Lbm/ hr			1,778	Lbm/ hr		
	N2 + Ar	28.15	40,582	Lbm/ hr			45,725	Lbm/ hr		
	CO2	44.01	7,847	Lbm/ hr			8,841	Lbm/ hr		
	H2O	18.02	5,817	Lbm/ hr			6,554	Lbm/ hr		
	NOx	46.01	0.38	Lbm/ hr /	5	ppm	0.42	Lbm/ hr /	5	ppm
	SOx	64.06	0.00	Lbm/ hr /	0	ppm	0.00	Lbm/ hr /	0	ppm
	CO	28.01	0.94	Lbm/ hr /	20	ppm	1.03	Lbm/ hr /	20	ppm
	VOC	44.10	0.37	Lbm/ hr /	5	ppm	0.41	Lbm/ hr /	5	ppm
	UHC	16.04	0.40	Lbm/ hr /	15	ppm	0.44	Lbm/ hr /	15	ppm
	SPM		0.77	Lbm/ hr /	15	ppm	0.85	Lbm/ hr /	15	ppm
	Total		55,827	Lbm/ hr			62,901	Lbm/ hr		
Flue Gas Exit Temp.			488	°F						
Flue Gas Exit Velocity			35.1	Ft/sec			38.6	Ft/sec		
Stack Height			32.6	ft			32.6	ft		
Stack ID			48	in			48	in		

NOTE:
THM emissions guarantees applicable between 50-100% of Design Case combustion conditions w/ 15% excess air.

THM emissions guarantees applicable for firebox temperatures above 1100°F.

Emissions above are for Design Case operation with air and fuel in ratio control. Upset conditions, such as operation outside the design, high turndown or start-up are not considered as guaranteed emissions cases.

The Maximum Case is the the specified heat release for the burner purchased. Extra duty is spec'd into the burner to ensure that the burner is never the limiting factor on duty.

revision	date	description	by	chk'd	appv'd

USA Applications

SHO = Superior Quality, Flexibility, Dependability & Modularity

EMISSIONS PERMIT DATA SHEET
AMERICAN ENGINEERING SYSTEM of UNITS

MJ18-346-Emissions-

This document contains confidential information proprietary to THM. This document shall not be used, reproduced or disclosed without the prior written consent of THM.

Owner:	XTO Energy	Owner Ref.:	PK-6010
Purchaser:	Audubon	Purchaser Ref.:	018193001
Manufacturer:	Tulsa Heaters Midstream	THM Ref.:	MJ18-346
Service:	Hot Oil Heater	Project:	Cowboy CDP
Number:	1	Location:	Carlsbad, NM
SHO Duty:	50.00 MMBTU/ hr	SHO Model:	SHO5000

Guarantees:

NOx	0.0267	Lb/MMBTU	20	ppm
SOx	no quote	Lb/MMBTU	-	ppm
CO	0.0163	Lb/MMBTU	20	ppm
VOC	0.0064	Lb/MMBTU	5	ppm
UHC	0.007	Lb/MMBTU	15	ppm
SPM	0.0134	Lb/MMBTU	15	ppm

			Design Case				Maximum Case			
Heat Release	LHV Basis		58.93	MMBTU/hr			64.83	MMBTU/hr		
Products of Combustion										
		MW								
	O2	32.00	1,578	Lbm/ hr			1,778	Lbm/ hr		
	N2 + Ar	28.15	40,581	Lbm/ hr			45,723	Lbm/ hr		
	CO2	44.01	7,847	Lbm/ hr			8,841	Lbm/ hr		
	H2O	18.02	5,817	Lbm/ hr			6,554	Lbm/ hr		
	NOx	46.01	1.54	Lbm/ hr /	20	ppm	1.69	Lbm/ hr /	20	ppm
	SOx	64.06	0.00	Lbm/ hr /	0	ppm	0.00	Lbm/ hr /	0	ppm
	CO	28.01	0.94	Lbm/ hr /	20	ppm	1.03	Lbm/ hr /	20	ppm
	VOC	44.10	0.37	Lbm/ hr /	5	ppm	0.41	Lbm/ hr /	5	ppm
	UHC	16.04	0.40	Lbm/ hr /	15	ppm	0.44	Lbm/ hr /	15	ppm
	SPM		0.77	Lbm/ hr /	15	ppm	0.85	Lbm/ hr /	15	ppm
	Total		55,827	Lbm/ hr			62,901	Lbm/ hr		
Flue Gas Exit Temp.			488	°F						
Flue Gas Exit Velocity			35.1	Ft/sec			38.6	Ft/sec		
Stack Height			32.6	ft			32.6	ft		
Stack ID			48	in			48	in		

NOTE:
THM emissions guarantees applicable between 50-100% of Design Case combustion conditions w/ 15% excess air.

THM emissions guarantees applicable for firebox temperatures above 1100°F.

Emissions above are for Design Case operation with air and fuel in ratio control. Upset conditions, such as operation outside the design, high turndown or start-up are not considered as guaranteed emissions cases.

The Maximum Case is the the specified heat release for the burner purchased. Extra duty is spec'd into the burner to ensure that the burner is never the limiting factor on duty.

revision	date	description	by	chk'd	appv'd

USA Applications

SHO = Superior Quality, Flexibility, Dependability & Modularity

EMISSIONS PERMIT DATA SHEET
AMERICAN ENGINEERING SYSTEM of UNITS

MJ18-346-Emissions-

This document contains confidential information proprietary to THM. This document shall not be used, reproduced or disclosed without the prior written consent of THM.

1	GAS FUEL CHARACTERISTICS								REV
2	DESIGNATION		Lean Fuel	Lean Fuel	Rich Fuel				1
3			(C2 Rej.)	(C2 Rec.)					1
4	HEATING VALVE (LHV)	Btu/SCF	993	881	1152				1
5	HEATING VALVE (HHV)	Btu/SCF	1098	979	1268				1
6	SPECIFIC GRAVITY		0.639	0.568	0.759				1
7	MOLECULAR WEIGHT		18.51	16.44	21.97				1
8	FUEL TEMPERATURE @ BURNER	ft.	100	100	100				1
9	FUEL PRESSURE @ BURNER (Available)	°F	30	30	30				1
10	FUEL GAS COMPOSITION, mol %								
11	METHANE	CH4	82.33%	96.75%	71.46%				1
12	EHTANE	C2H6	14.67%	0.08%	14.48%				1
13	PROPANE	C3H8	0.28%		7.55%				1
14	BUTANES	C4H10			2.25%				1
15	PENTANES	C5H12			0.56%				1
16	HEXANES	C6H14			0.09%				1
17	ETHYLENE	C2H4							
18	PROPENE	C3H6							
19	BUTENE	C4H8							
20	PENTENE	C5H10							
21	BUTADIENE	C4H6							
22	ACETYLENE	C2H2							
23	ETHONAL	C2H4O							
24	HYDROGEN	H2							
25	CARBON MONOXIDE	CO							
26	HYDROGEN SULFIDE	H2S							
27	AMMONIA	NH3							
28	BENZENE	C6H6							
29	WATER (VAPOR)	H2O			0.01%				1
30	CARBON DIOXIDE	CO2	0.03%	0.01%	0.12%				1
31	OXYGEN	O2							
32	NITROGEN	N2	2.69%	3.17%	3.48%				1
33	TOTAL		**100.0%**	**100.0%**	**100.0%**				1

34	LIQUID FUEL CHARACTERISTICS							
35	DESIGNATION							
36	HEATING VALUE	(LHV)	Btu/lb					
37	SPECIFIC GRAVITY		DEG. API					
38	VISCOSITY	@ 15 °F	cSt					
39		@ 100 °F	cSt					
40	VANADIUM		ppm					
41	SODIUM		ppm					
42	POTASSIUM		ppm					
43	NICKEL		ppm					
44	FIXED NITROGEN		% wt					
45	SULFUR		% wt					
46	ASH		% wt					
47	WATER		% wt					
48	**DISTILLATION**							
49	INITIAL BOILING POINT		°F					
50	ASTM MID-POINT		°F					
51	ASTM END-POINT		°F					
52	FUEL TEMPERATURE @ BURNER		°F					
53	FUEL PRESSURE AVAILABLE @ BURNER		psig					
54	ATOMIZING MEDIUM : AIR / STEAM / MECHANICAL							
55	TEMPERATURE		°F					
56	PRESSURE		psig					

OWNER:	XTO Energy	**CALLIDUS REF:**	**BB-9027773**
OWNER REF.:	PK-6010 / 6020 / 6030	**PROJECT TITLE:**	**BB-9027773-DS**
PURCHASER:	Tulsa Heaters Midstream		
PURCHASER REF.:	MJ18-346, MJ18-347, MJ18-348		
HEATER SERVICE	Hot Oil Heater		
UNIT:			
ITEM NO.:			

uop
A Honeywell Company

BURNER DATA SHEET

COPY

* Stabilizer Heaters

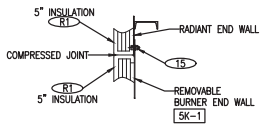

SECTION C-C

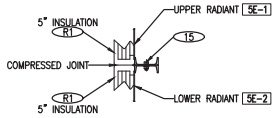

SECTION D-D

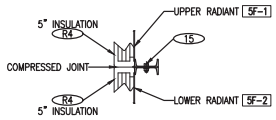

SECTION E-E

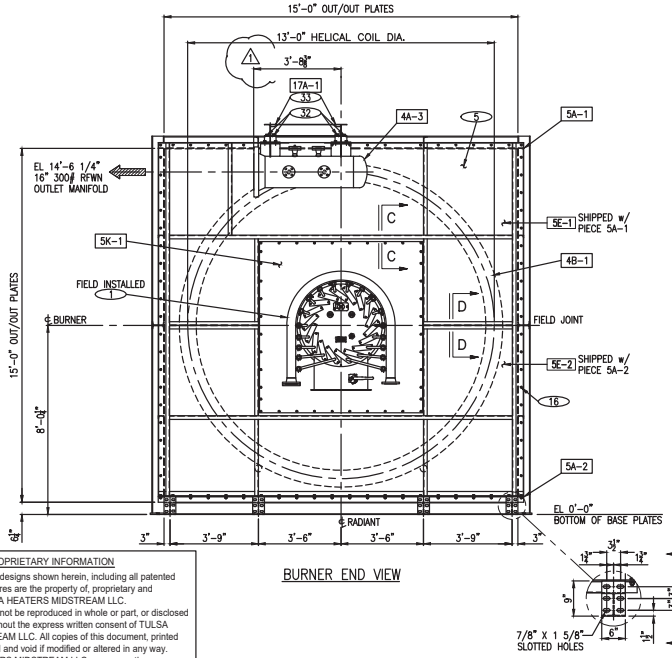

BURNER END VIEW

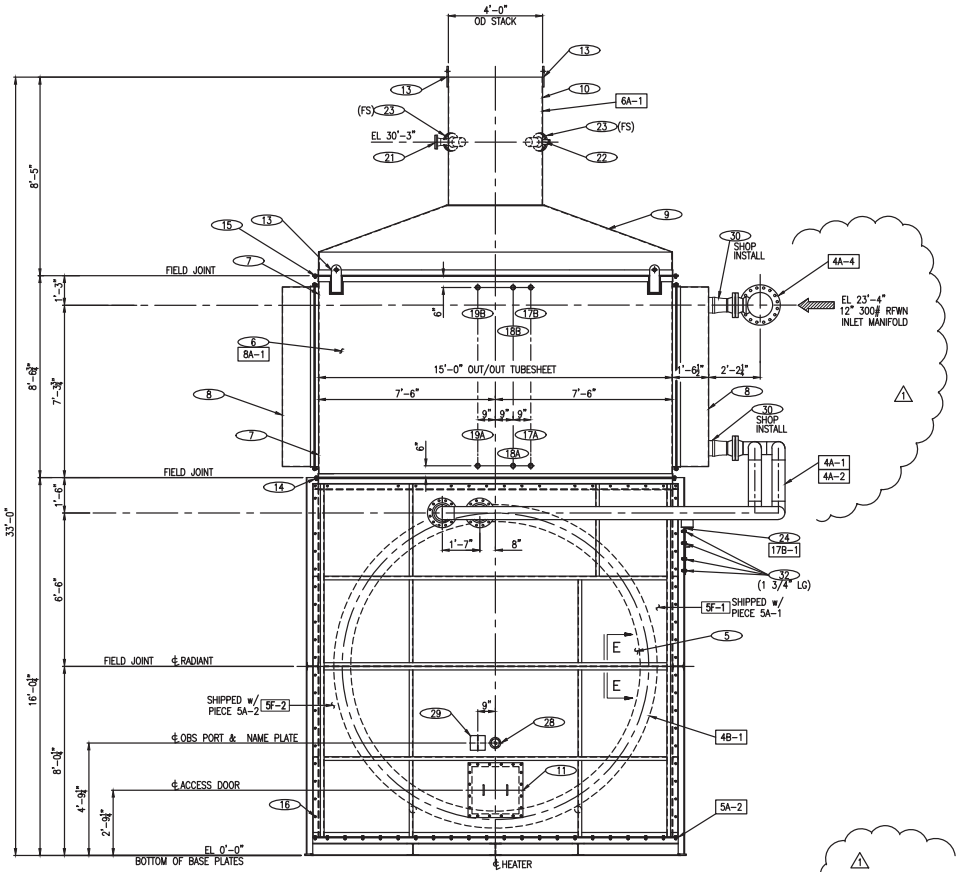

TARGET END VIEW

1707284-003-ME02-0023

PROPRIETARY INFORMATION

The information and designs shown herein, including all patented and patentable features are the property of, proprietary and confidential to TULSA HEATERS MIDSTREAM LLC.
This document shall not be reproduced in whole or part, or disclosed to any third party without the express written consent of TULSA HEATERS MIDSTREAM LLC. All copies of this document, printed or electronic, are null and void if modified or altered in any way.
Only TULSA HEATERS MIDSTREAM LLC possesses the controlling document in its original state and shall govern over any copy, printed or electronic.

Customer:
XTO ENERGY, INC.
AUDUBON

LOCATION : CARLSBAD, NM
UNIT : COWBOY CDP
SERVICE : HOT OIL HEATER
EQUIPMENT No. : PK-6020
P.O. No. : 1707284-003
SHO : 5000

Rev.	Date	By	Revision Description
1	8/23	GP	ADDED CUST. DWG. NO., RELOCATED INLET/ OUTLET MANIFOLDS, REVERSE ITEM 16, 17 & 18 LOCATIONS

THM TULSA HEATERS MIDSTREAM

Title: GENERAL ARRANGEMENT ELEV. BURNER & TARGET END

Drawn By: JPW	Date: 7/14/18	Job No.: MJ18-347	
Checked By: ASW	Date: 7/15/18	Drawing No.: MJ18347-1B	Rev.: 1
Approved By	Certified By		

Owner:	XTO Energy	Owner Ref.:	PK-6310
Purchaser:	Audubon	Purchaser Ref.:	018193001
Manufacturer:	Tulsa Heaters Midstream	THM Ref.:	MJ19-395
Service:	Hot Oil Heater	Project:	Cowboy CDP
Number:	1	Location:	Carlsbad, NM
SHO Duty:	79.30 MMBTU/ hr	SHO Model:	SHO5000

Guarantees:

NOx	0.0067	Lb/MMBTU	5	ppm
SOx	no quote	Lb/MMBTU	-	ppm
CO	0.0163	Lb/MMBTU	20	ppm
VOC	0.0064	Lb/MMBTU	5	ppm
UHC	0.007	Lb/MMBTU	15	ppm
SPM	0.013	Lb/MMBTU	15	ppm

			Design Case				Maximum Case			
Heat Release	LHV Basis		94.54	MMBTU/hr			103.99	MMBTU/hr		
Products of Combustion										
		MW								
	O2	32.00	2,657	Lbm/ hr			2,923	Lbm/ hr		
	N2 + Ar	28.15	66,981	Lbm/ hr			73,679	Lbm/ hr		
	CO2	44.01	12,059	Lbm/ hr			13,265	Lbm/ hr		
	H2O	18.02	10,400	Lbm/ hr			11,440	Lbm/ hr		
	NOx	46.01	0.63	Lbm/ hr /	5	ppm	0.69	Lbm/ hr /	5	ppm
	SOx	64.06	0.00	Lbm/ hr /	0	ppm	0.00	Lbm/ hr /	0	ppm
	CO	28.01	1.54	Lbm/ hr /	20	ppm	1.69	Lbm/ hr /	20	ppm
	VOC	44.10	0.61	Lbm/ hr /	5	ppm	0.67	Lbm/ hr /	5	ppm
	UHC	16.04	0.66	Lbm/ hr /	15	ppm	0.73	Lbm/ hr /	15	ppm
	SPM		1.23	Lbm/ hr /	15	ppm	1.35	Lbm/ hr /	15	ppm
	Total		92,101	Lbm/ hr			101,311	Lbm/ hr		
Flue Gas Exit Temp.			599	°F						
Flue Gas Exit Velocity			65.3	Ft/sec			71.8	Ft/sec		
Stack Height			34.3	ft			34.3	ft		
Stack ID			48	in			48	in		

NOTE:

THM emissions guarantees applicable between 50-100% of Design Case combustion conditions w/ 15% excess air.

THM emissions guarantees applicable for firebox temperatures above 1100°F.

Emissions above are for Design Case operation with air and fuel in ratio control. Upset conditions, such as operation outside the design, high turndown or start-up are not considered as guaranteed emissions cases.

The Maximum Case is the the specified heat release for the burner purchased. Extra duty is spec'd into the burner to ensure that the burner is never the limiting factor on duty.

revision	date	description	by	chk'd	appv'd

USA Applications

SHO = Superior Quality, Flexibility, Dependability & Modularity

EMISSIONS PERMIT DATA SHEET

AMERICAN ENGINEERING SYSTEM of UNITS

MJ19-395-Emissions-

This document contains confidential information proprietary to THM. This document shall not be used, reproduced or disclosed without the prior written consent of THM.

Owner:	XTO Energy	Owner Ref.:	PK-6110
Purchaser:	Audubon	Purchaser Ref.:	018193001
Manufacturer:	Tulsa Heaters Midstream	THM Ref.:	MJ18-349
Service:	Hot Oil Heater	Project:	Cowboy CDP
Number:	1	Location:	Carlsbad, NM
SHO Duty:	79.30 MMBTU/ hr	SHO Model:	SHO5000

Guarantees:

NOx	0.0334	Lb/MMBTU	25	ppm
SOx	no quote	Lb/MMBTU	-	ppm
CO	0.0163	Lb/MMBTU	20	ppm
VOC	0.0064	Lb/MMBTU	5	ppm
UHC	0.007	Lb/MMBTU	15	ppm
SPM	0.013	Lb/MMBTU	15	ppm

			Design Case				Maximum Case			
Heat Release	LHV Basis		94.54	MMBTU/hr			103.99	MMBTU/hr		
Products of Combustion										
		MW								
	O2	32.00	2,657	Lbm/ hr			2,923	Lbm/ hr		
	N2 + Ar	28.15	66,978	Lbm/ hr			73,676	Lbm/ hr		
	CO2	44.01	12,059	Lbm/ hr			13,265	Lbm/ hr		
	H2O	18.02	10,400	Lbm/ hr			11,440	Lbm/ hr		
	NOx	46.01	3.16	Lbm/ hr /	25	ppm	3.47	Lbm/ hr /	25	ppm
	SOx	64.06	0.00	Lbm/ hr /	0	ppm	0.00	Lbm/ hr /	0	ppm
	CO	28.01	1.54	Lbm/ hr /	20	ppm	1.69	Lbm/ hr /	20	ppm
	VOC	44.10	0.61	Lbm/ hr /	5	ppm	0.67	Lbm/ hr /	5	ppm
	UHC	16.04	0.66	Lbm/ hr /	15	ppm	0.73	Lbm/ hr /	15	ppm
	SPM		1.23	Lbm/ hr /	15	ppm	1.35	Lbm/ hr /	15	ppm
	Total		92,101	Lbm/ hr			101,311	Lbm/ hr		
Flue Gas Exit Temp.			599	°F						
Flue Gas Exit Velocity			65.3	Ft/sec			71.8	Ft/sec		
Stack Height			34.3	ft			34.3	ft		
Stack ID			48	in			48	in		

NOTE:
THM emissions guarantees applicable between 50-100% of Design Case combustion conditions w/ 15% excess air.

THM emissions guarantees applicable for firebox temperatures above 1100°F.

Emissions above are for Design Case operation with air and fuel in ratio control. Upset conditions, such as operation outside the design, high turndown or start-up are not considered as guaranteed emissions cases.

The Maximum Case is the the specified heat release for the burner purchased. Extra duty is spec'd into the burner to ensure that the burner is never the limiting factor on duty.

revision	date	description	by	chk'd	appv'd

THM TULSA HEATERS MIDSTREAM

USA Applications

SHO = Superior Quality, Flexibility, Dependability & Modularity

EMISSIONS PERMIT DATA SHEET

AMERICAN ENGINEERING SYSTEM of UNITS

MJ18-349-Emissions-

This document contains confidential information proprietary to THM. This document shall not be used, reproduced or disclosed without the prior written consent of THM.

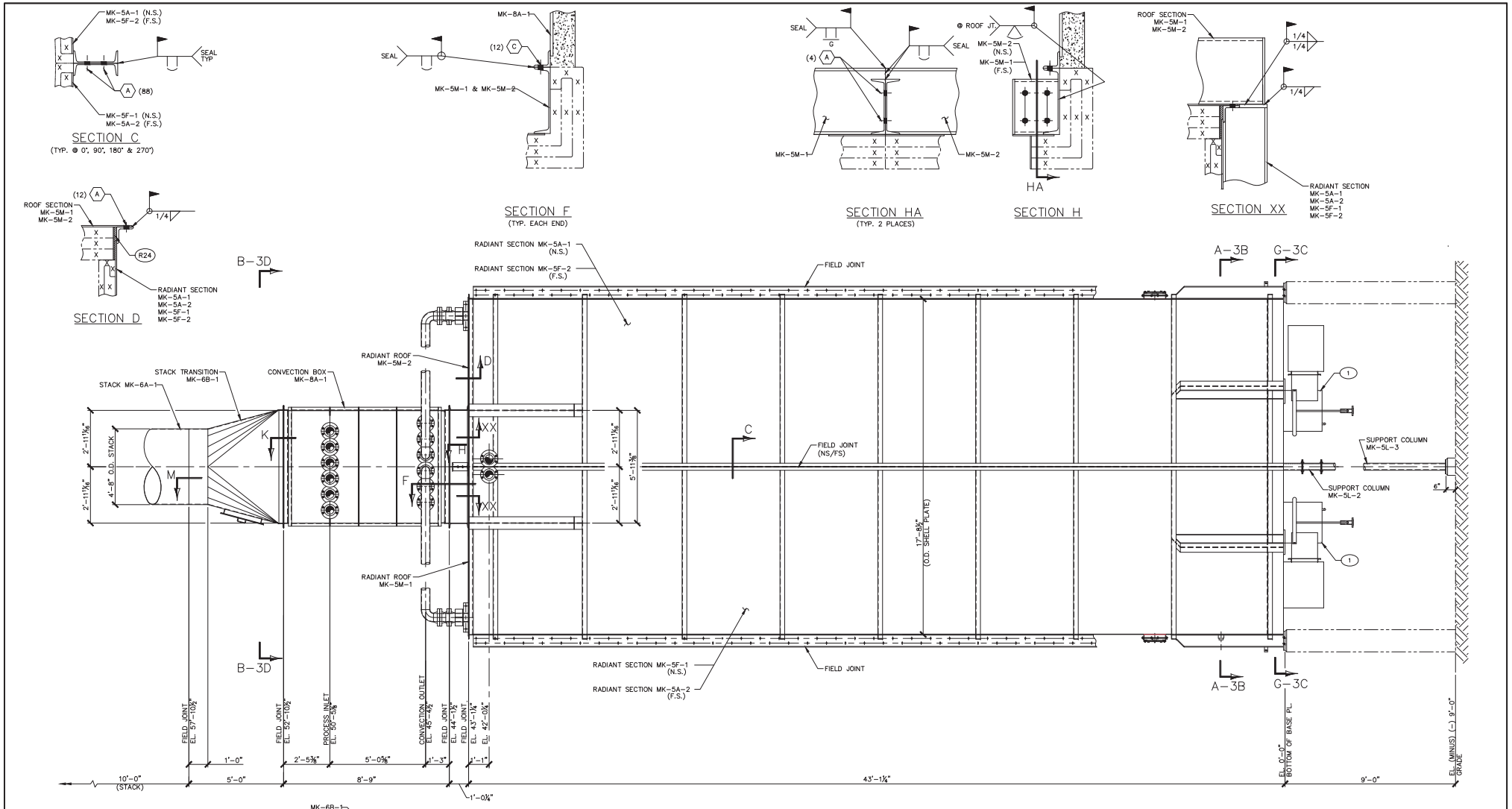

WORK THIS W/ DWG.'S -3B, 3C & 3D. BOM ON -3D.

PROPRIETARY INFORMATION

The information and designs shown herein, including all patented and patentable features are the property of, proprietary and confidential to TULSA HEATERS, INC.. This document shall not be reproduced in whole or part, or disclosed to any third party without the express written consent of TULSA HEATERS, INC.. All copies of this document, printed or electronic, are null and void if modified or altered in any way. Only TULSA HEATERS INC. possesses the controlling document in its original state and shall govern over any copy, printed or electronic.

Customer:
AUDUBON / XTO ENERGY

LOCATION : CARLSBAD, NM.
UNIT : CRYO UNIT
SERVICE : HOT OIL HEATER
EQUIP. No. : PK-6110
P.O. No. : 1802759-002
THI JOB No.: 18925

Rev.	Date	By	Revision Description

TULSA HEATERS INC.

Title			
FIELD ERECTION			
Drawn By: GG	Date: 7-24-18	Job No.: 18925	
Checked By: KEN	Date: 7-25-18	Drawing No.: 18925-3A	Rev.: 0

4.4 Flue Gas at 1700°F, Normal Operation

	Normal Case
COMPONENT:	**lb/hr**
CO_2	22743.78
H_2O	3869.91
N_2	17926.10
SO_2	2.72
O_2	1376.65
TOTAL	**45919.16**

4.5 System Performance

Stack Emission	Expected Performance
Destruction Efficiency	> 99.95% of all H2S / VOC
NOx, ppm_{vd} @ 3% O2	50
CO, ppm_{vd} @ 3% O2	50

These values are understood to apply only when the system is operated in accordance with the operating conditions stipulated in the design summary and for the waste stipulated in the design basis sections of this proposal.

Tulsa, Oklahoma

Thermal Oxidizer Datasheet

Customer Document No.

REV	BY	DATE	DESCRIPTION
A	JNM	16-Jul-18	Issued for Review
B	SN	9-Aug-18	Issued for Review
C	SN	31-Aug-18	Issued for Review

Zeeco Document No. 35595-2031

Project: Cowboy - CDP

BY	APPR	DATE
JNM	SN	16-Jul-18

Client:	XTO Energy
End User:	Cowboy CDP
Job Site:	Carlsbad, NM
Tag Number:	TO Thermal Oxidizer / TO-6980

#							
	DESIGN						
1	Service	Acid Gas Incineration					
2	Waste Gas Flow (Max), lb/hr	22,541 (Acid Gas) / 547 (Flash Gas) / 588 (BTEX w/ Stripping Gas)					
3	Incinerator Operating Temp, °F	1700-1800					
4	Altitude ASL, ft	3400					
5	Product Flow Max, lb/hr	50,226					
6	Air Flow Design, lb/hr	26,973					
7	Max Waste Release, mmBTU/HR	21.6					
8	Max Total Heat Release, mmBTU/HR	24.1					
9	Number Required	1					
10	**INCINERATOR SPECIFICATIONS**						
11	Type	Vertical Thermal Oxidizer					
12	Size	7' OD x 52' OAH					
13							
14	Shell Material	SA-36					
15 16	Refractory	Floor: 4" 3000°F Castable, backed w/ 2" Insulating Castable. Stack: 4" 2300°F Insulating Castable					
17	Mechanical Design Temp (°F) / Pressure (psig)	650 / 0					
18	Mastic (Y/N)	N					
19	Refractory Anchors	310 SS					
20	Burner Connection, in.	36"					
21	Jacket	Corrugated Rainshield					
23	Access Door	30" Manway with Davit					
24	Lifting Lug Design		X	YES		NO	Two(2) lifting trunnions 180° apart
25	Slide Plates			YES	X	NO	
26	Rainshield		X	YES		NO	
28	**BURNER SPECIFICATIONS**						
29	Type	Forced Draft Design					
30	Pilot	Premix with High Energy Ignitor					
31	Combustion Air Change in Pressure (in WC)	3					
33	Fuel Gas Rel, mmBTU/HR	25					
34	Waste Gas Rel, mmBTU/HR	0.8 (Acid Gas) / 10.74 (Flash Gas) / 10.01 (BTEX w/ Stripping Gas)					
35							

NOZZLES

Noz.	Description	Size (in)
N1	Burner Connection	36"
N2A/B	Sample Ports w/ Blind	4"
N3A/B	Thermocouple	1-1/2"
N4	Sampling Port	4"
N5A/B	Spare Conn.	2"
N6	Sight Port w/ Blast Gate	4"
M1	Manway w/ Davit	30"

NOTES: Reference Document for Nozzles - 35595-G065A-001

ZEECO Tulsa, Oklahoma

Burner Datasheet

REV	BY	DATE	DESCRIPTION
A	JNM	16-Jul-18	Issued for Review
B	SN	9-Aug-18	Issued for Review

Customer Doc No.

Zeeco Doc No.: 35595-2030

Project: Cowboy - CDP

BY	APPR	DATE
JNM	SN	16-Jul-18

Client:	XTO Energy
Customer:	
Job Site:	Cowboy CDP
Tag Number:	GB Burner / BR-6980

VESSEL DATA	
Firing Direction	Vertical
Refractory Thickness at Burner Nozzle (in.)	6"
Type of Draft (Natural, Forced, Induced)	Forced

BURNER MECHANICAL DATA	
Burner Item Number	
Type	GB
Quantity	1
Location	Carlsbad, NM
Burner Mounting	Bolted
Burner Design Code	None
Burner Case Material	Carbon Steel
Tile Block Material	60% Alumina
Scanner Type	1" Swivel Scanner
Scanner Quantity / Connection Quantity	2
Paint	Per Customer Specifications

BURNER PROCESS DATA	
Maximum Burner Combustion Air Pressure Drop, in WC	2.9
Design Combustion Air Temperature, °F	100
Design Combustion Air Flowrate, lb/hr	28,151
Combustion Air Turn Down lb/hr	5,630
Maximum Excess Air (%)	35%

HEAT RELEASE (mmBTU/hr)

Case	Fuel Gas Heat Release
Maximum (Rated)	25
Minimum	2.5

NOZZLE SCHEDULE

ITEM	QTY	SIZE / RATING	SERVICE
B1	1	36" / FAB	Mounting Flange
B2	1	16" / 150#	Waste Gas Conn. /Acid gas
B3	1	20" / FAB	Combuston Air Conn.
B4	1	2" / 150#	Fuel Gas Conn.
B5	1	2" / 150#	Flash Gas Conn.
B6	1	1-1/2" / 150#	Pilot Mounting Conn.
B7	1	1" / 150#	Drain w/ Blind
B8	1	1" / 150#	Drain w/ Blind
B9	1	1" NPT	Pilot Sight Port Conn. w/ Purge
B10	1	2" NPT	Sight Port Conn. w/ Purge
B11	1	1" NPT	Main Flame Scanner Conn. w/ Purge
B12	1	3" / 150#	BTEX Stream Conn.

PILOT DATA	
Model:	AR/GS-1
Quantity per Burner	1
Size (in.)	1 1/2"
Ignition	Electronic HEI
Operating Pressure (PSI)	10
Air / Gas Consumption (SCFH)	1609/178 (methane)

FUEL CHARACTERISTICS

Type of Fuel	Rich Fuel Gas	Lean Fuel Gas
LHV (BTU/SCF)	1153	885
Molecular Weight	21.52	16.43
Pressure Avail. (psig)	125	125
Temperature (°F)	35-80	110
Composition - VOL %		
Nitrogen	2.1448	3.166
CO2	0.2038	0.006
Methane	74.43	96.7529
Ethane	13.73	0.075
Propane	6.4286	
i-Butane	0.628	
n-Butane	1.6049	
i-Pentane	0.2989	
n-Pentane	0.3112	
n-Hexane	0.1	
n-Heptane	0.1	
H2O	0.0192	
Total:	99.9994	99.9999

NOTES:

1. Reference Documents - P&ID for Burner 35595-04-11001-002 (Cust. No. 1802750-003-ME08-0007)
2. Reference Documents - Burner General Arrangement 35595-G006A-001 (Cust. No. 1802759-003-ME02-0040)
3. Expected NOx & CO ppmv included in proposal as indicated here:

Stack Emission	Expected Performance
Destruction Efficiency	*> 99.95% of all H2S / VOC*
NOx, ppm_{vd} @ 3% O2	50
CO, ppm_{vd} @ 3% O2	*50*

– DESIGN DATA –

DESIGN CODE:	ASME STS-1-2011
DESIGN PRESSURE INTERNAL	0 PSI @ 650°F
HYDRO TEST	NONE
MAWP	5 PSI @ 650°F
MDMT	-20°F
PWHT	NO
LETHAL SERVICE:	NO
SEISMIC CODE PER ASCE 7-10	SITE CLASS = C, IMP FACTOR = 1.25, Ss = 0.24%, S1 = 0.05%, R = 3
WIND CODE PER ASCE 7-10	WIND SPEED = 120 MPH, EXP. = C, IMP FACTOR = 1.15
RADIOGRAPH	SHELL: SPOT, SHELL CIRC.: SPOT, SHELL LONG.: SPOT
JOINT EFFICIENCY	SHELL: 0.85, SHELL CIRC.: 0.85, SHELL LONG.: 0.85
ALLOWABLE CORROSION:	1/8"
ESTIMATED STEEL FABRICATION WT.	20,375 LB.
ESTIMATED TEST WEIGHT	N/A
ESTIMATED OPERATING/EMPTY WEIGHT	59,806 LB.
ESTIMATED CAPACITY	10,411 GAL.

– NOZZLE LEGEND –

ITEM	SERVICE	SIZE	RATING	TYPE	CODE	SCH/BORE	FLG. MAT'L.	NECK MAT'L.
N1	BURNER CONNECTION	36"	FAB.	FAB.	FABRICATED	---	A-36	---
N2A/B	SAMPLE PORTS w/ BLIND	4"	150#	RFWN	ASME B16.5	STD.	A-105	A-106-B
N3A/B	THERMOCOUPLE	1 1/2"	150#	RFWN	ASME B16.5	XH	A-105	A-106-B
N4	SPARE O_2 ANALYZER CONN. w/ BLIND	4"	150#	RFWN	ASME B16.5	STD.	A-105	A-106-B
N5A/B	SPARE CONNECTION	2"	---	M.N.P.T.	-------	STD.	----	A-106-B
N6	SIGHT PORT W/ BLAST GATE	4"	150#	RFWN	ASME B16.5	STD.	A-105	A-106-B
M1	MANWAY WITH DAVIT	30"	FAB.	FAB.	FABRICATED	.250"	A-36	A-36
C1	PURGE CONNECTION	3/4"	6000#	F.N.P.T.	-------	-----	A-105	------
C2	PURGE CONNECTION	3/4"	6000#	F.N.P.T.	-------	-----	A-105	------
C3	PURGE CONNECTION	3/4"	6000#	F.N.P.T.	-------	-----	A-105	------

– GENERAL NOTES –

1. ONE UNIT REQUIRED. TAG NUMBER: TO-1801
2. ALL FABRICATION IN ACCORDANCE WITH ASME STS-1-2011.
3. FLANGE HOLES SHALL STRADDLE NORMAL VESSEL CENTERLINES UNLESS OTHERWISE NOTED.
4. FOR PAINT, SEE ZEECO DOCUMENT 35595-4030.
5. REFRACTORY IS TO BE FURNISHED AND SHOP INSTALLED BY ZEECO.
6. FOR REFRACTORY, REFRACTORY LEGEND AND REFRACTORY NOTES, SEE DRAWING 35595-R064A-001.
7. FOR LIFTING DIAGRAM, SEE DRAWING 35595-G064A-010.

– MATERIALS –

SHELL	A-36
NOZZLE CYLINDERS & PIPES	A-36 / A-106-B
FLANGE FORGINGS	A-105
STUD BOLTS/NUTS	A-193-B7 / A-194-2H ZINC PLATED
GASKETS	1/8" SERVICE SHEET GASKET
VESSEL SUPPORT COLUMNS	A-992
COUPLINGS	A-105
TAILING LUGS	A-36
LIFTING TRUNNIONS	A-36

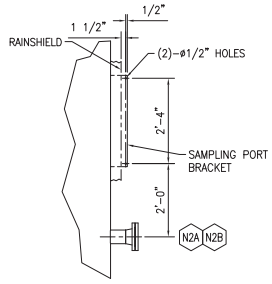

SAMPLING PORT BRACKET DETAIL

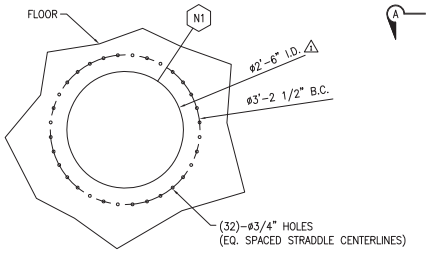

BURNER MOUNTING

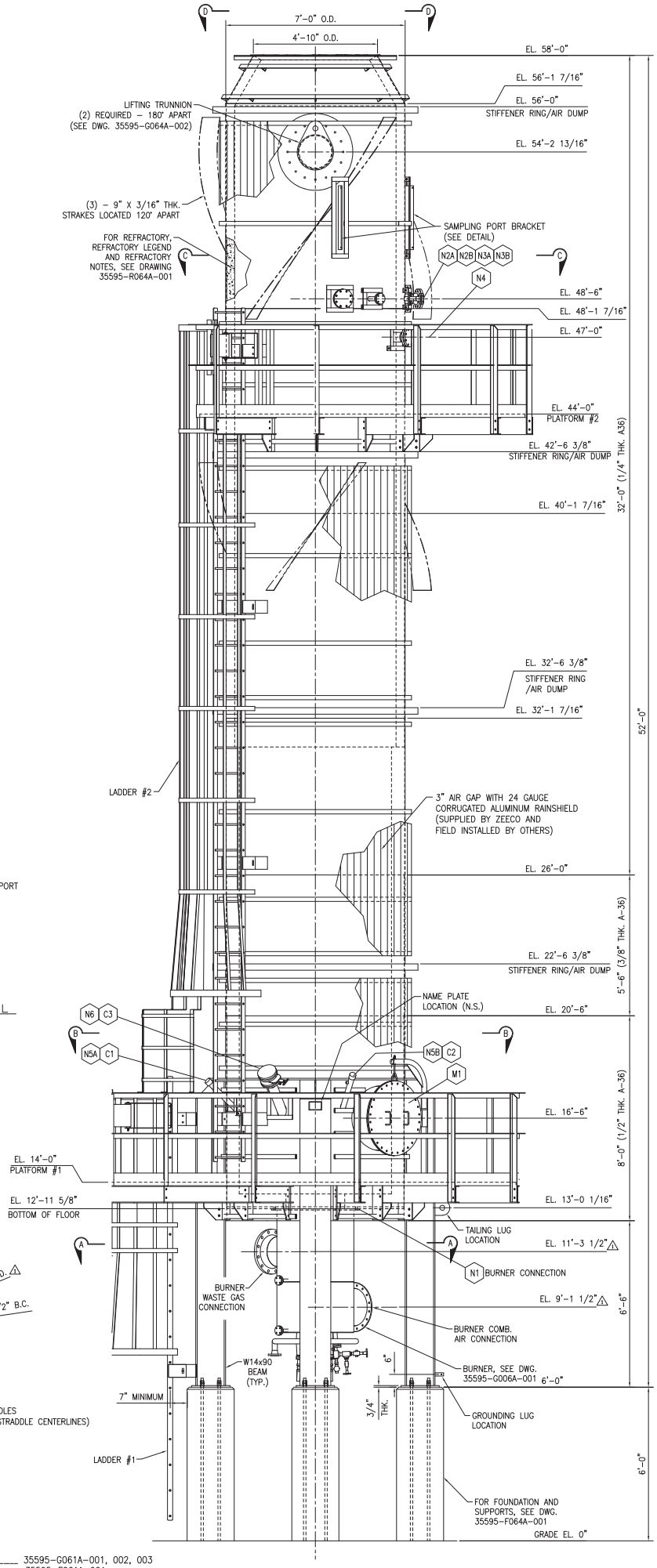

ELEVATION VIEW
(LOOKING NORTH)

REFERENCE DRAWINGS:

THERMAL OXIDIZER SYSTEM GENERAL ARRANGEMENT _____ 35595-G061A-001, 002, 003
FOUNDATION PLAN THERMAL OXIDIZER SYSTEM _____ 35595-F061A-001
THERMAL OXIDIZER FOUNDATION PLAN _____ 35595-F064A-001
THERMAL OXIDIZER REFRACTORY DETAILS _____ 35595-R064A-001

NO	DATE	REVISION DESCRIPTION	BY	CKD	APP
2	31AUG18	REVISED AS NOTED	SAN	DAK	SAN
1	16JUL18	REVISED AS NOTED	ABC	JGH	SAN
0	12JUL18	ISSUED FOR APPROVAL	ABC	JGH	SAN

ZEECO, INC.
2215 E. ERIE AVE. STREET
PROVO, OREM, OK 74601
PHONE: (918) 251-5511
FAX: (918) 251-5519
www.zeeco.com
sales@zeeco.com

PROPRIETARY DATA IS RELATED TO THE INFORMATION CONTAINED IN THIS DOCUMENT. THIS DOCUMENT MUST BE RETURNED TO ZEECO, INC. UPON REQUEST. THIS DOCUMENT OR ITS CONTENTS MAY NOT BE REPRODUCED OR USED FOR ANY PURPOSE WITHOUT AUTHORIZED CONSENT OF ZEECO, INC.

CUSTOMER: XTO ENERGY, INC.
JOBSITE: COWBOY CDP, CARLSBAD, NEW MEXICO
END USER: AUDUBON COMPANIES
P.O. NO.: 1802759-003-ME02-0035

THERMAL OXIDIZER
GENERAL ARRANGEMENT

S.O. NO.: TO-6980
DWG., SUBJ., & SYSTEM NO.: 35595 - G064A - 001

DRAWN: ABC	DATE: 12JUL18	
CHK: JGH	APP: SAN	
SCALE: NONE	DWG. NO.: JM	REV. NO.: 2

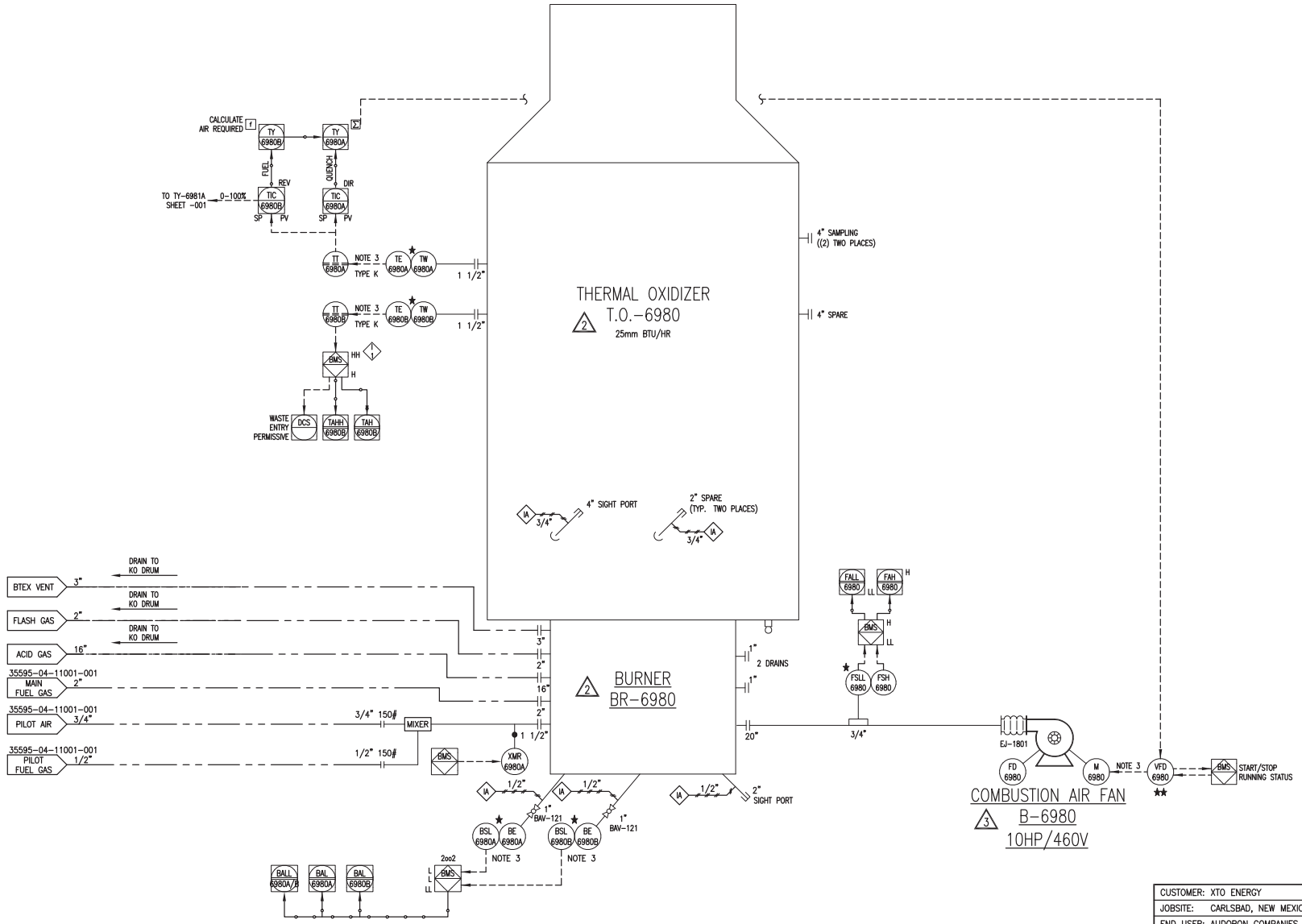

SEE PID-35595-04-11001-001 FOR LEGEND AND NOTES

NO.	DATE	REVISION DESCRIPTION	BY	CKD.	APP.
3	03OCT18	REVISED AS NOTED	SAN	EK	SAN
2	31AUG18	REVISED PER CUSTOMER COMMENTS	BLS	EK	SN
1	02AUG18	REVISED PER CUSTOMER COMMENTS	BLC	EK	SN
0	28JUN18	ISSUED FOR APPROVAL	BLC	JEA	SN

CUSTOMER: XTO ENERGY
JOBSITE: CARLSBAD, NEW MEXICO
END USER: AUDOBON COMPANIES
P.O. NO.: 1802759-003

ZEECO, INC.
22151 EAST 91st STREET
BROKEN ARROW, OK 74014
PHONE: (918) 258-8551
FAX: (918) 251-5519
www.zeeco.com
sales@zeeco.com

PROPRIETARY DATA IS INCLUDED IN THE INFORMATION DISCLOSED HEREIN AND IS THE PROPERTY OF ZEECO, INC. THIS INFORMATION IS SUBMITTED IN CONFIDENCE AND MUST BE USED IN CONNECTION WITH WORK DONE FOR ZEECO, INC. AND ALL RIGHTS OF DESIGN OR INVENTION ARE RESERVED. UNAUTHORIZED DISCLOSURE OR USE IS PROHIBITED BY LAW.

P & I DIAGRAM
INCINERATOR PACKAGE
THERMAL OXIDIZER

DRAWN	DATE
BLC	28JUN18
CHK	APP
JEA	SN
SCALE	APP
N.T.S.	–

S.O. NO. GROUP DWG. SUB CAT. SYSTEM NO. DWG. NO. REV. NO.
35595-04-11001-002 3

Shaun_Napier 10/3/2018 6:45:59 AM Q:\Job-Information\Incinerators\35000\35595 XTO Energy\Drafting\Controls\35595-04-11001-002 3.dwg Shaun_Napier 10/3/2018 6:44:34 AM

audubon

D: 713.452.3123
kejones@auduboncompanies.com

10205 Westheimer Road, Suite 100
Houston, Texas 77042
auduboncompanies.com | LinkedIn

From: Cody Faulkenberry <Cody_Faulkenberry@zeeco.com>
Sent: Friday, May 4, 2018 5:30 PM
To: Kelly Jones <kejones@auduboncompanies.com>; Kirsten Berg <Kirsten_Berg@zeeco.com>; Gabriel Garcia <ggarcia@auduboncompanies.com>
Cc: Nikki Jenlink <Nikki_Jenlink@zeeco.com>; Scott Reed <Scott_Reed@zeeco.com>; Blake Knight <Blake_Knight@zeeco.com>; Alan Forman <integratedcontrols@prodigy.net>; John Ehlig <John_Ehlig@zeeco.com>; Sean O'Grady <Sean_OGrady@zeeco.com>
Subject: RE: 2018-02438FL-01: RFQ 018193001-AE-RFQ-ME0018 - Combustor Package - XTO Energy Cowboy Natural Gas and Oil CDP

Kelly,

Below are the guaranteed DRE's for each piece of combustion equipment in regards to the XTO Cowboy project.

There will be no cost impact added to our proposals to meet the DRE's listed below. If a higher DRE is required, we can provide equipment that meets the request.

1. CDP Flare System, 98% DRE
2. CDP Combustor, 99% DRE
3. Thermal Oxidizer, 99.99% DRE

Please let us know if you have any questions or more official documentation is needed. Thanks!

Cody Faulkenberry
Applications Engineer, Sales

Zeeco Houston | Cell: +1 713 859 6047 | Direct: +1 918 893 8816

From: Kelly Jones [mailto:kejones@auduboncompanies.com]
Sent: Wednesday, May 02, 2018 7:18 AM
To: Kirsten Berg <Kirsten_Berg@zeeco.com>; Gabriel Garcia <ggarcia@auduboncompanies.com>
Cc: Nikki Jenlink <Nikki_Jenlink@zeeco.com>; Scott Reed <Scott_Reed@zeeco.com>; Blake Knight <Blake_Knight@zeeco.com>; Alan Forman <integratedcontrols@prodigy.net>; Cody Faulkenberry <Cody_Faulkenberry@zeeco.com>; John Ehlig <John_Ehlig@zeeco.com>
Subject: RE: 2018-02438FL-01: RFQ 018193001-AE-RFQ-ME0018 - Combustor Package - XTO Energy Cowboy Natural Gas and Oil CDP
Importance: High

Kirsten,

ZEECO, INC.

CLIENT:	Audubon	DOCUMENT NO:	35284-8020
USER:	XTO Energy	PAGES:	1258 + Cover
PROJECT:	Cowboy CDP		
CLIENT P.O. #:	1707284-002 / 1707285-003	ZEECO SO:	35284

FLARE SYSTEM

FINAL DATA BOOK

REV	DATE	BY	APP	DESCRIPTION
0	01MAY19	ADM	TRD	FOR YOUR USE

Predicted Utility Requirements

Client:	Audubon	Zeeco Ref.:	35284	Date:	11-Apr-19
Location:	New Mexico - XTO Cowboy	Client Ref.:	1707284-002 / 1707285-003	Rev.	0

Equipment	Normal Operations Utility Requirements
HP / LP AFTAMJ-18/50-12	**Pilot Gas Consumption (Fuel Gas):** 65.12 SCFH @ 15 PSIG Per Pilot (Lean Fuel) 56.17 @ 15 PSIG Per Pilot (Rich Fuel) **HP Purge Gas requirement:** 480 SCFH (Fuel Gas) or 180 SCFH (N2) **LP Purge Gas Requirement:** 706 SCFH (Fuel Gas From Pilot Gas Manifold) and 50 SCFH (Fuel Gas From LP Riser) or 530 SCFH (N2 From LP Riser)
GENERAL	**Electrical Consumption per Ignition Rack (HP & Acid)** 700 W @ 120V, 60 Hz, 1 Ph During Ignition 400 W @ 110V, 60 Hz, 1 Ph After Ignition **Ignition Timing** 1 pulse per 3 seconds, Timeout after 3 minutes **Ignition Gas Consumption On Control Rack Assembly:** 109 SCFH @ 15 PSIG (Ignition Period Only) **Instrument Air Consumption On Control Rack Assembly:** 986 @ 15 PSIG (Ignition Period Only)

NOTES:
(1) Pilot fuel gas requirements are based upon a fuel gas with an LHV of 923 BTU/SCF and a specific gravity of 0.56.
(2) If ignition is made and pilot temperature returns to high temperature above setpoint before 5 minutes, then igniter will cease and timer will not timeout. System will go back to high temperature state.
(3) Electrical Consumption during ignition includes all power required for the entire panel.

Air Assisted Flare Tip Specification Sheet

Client:	Audobon Engineering	Zeeco Ref.:	2018-01056FL-02	Date:	14-May-18
Location:	Carlsbad, NM	Client Ref.:	018193001-AE-RFQ-ME0017	Rev.	3

General Information:

Tag No.:	F-1		
Model:	AFTA-18/50-12	Type:	Air-Assisted
Length:	10'- 0 "		
Weight:	5000 lbs		
No. of Pilots:	3		

Design Case:

Governing Case:	HP Max Case	
Molecular weight:	21.3	
L. H. V. :	1,143	BTU/SCF
Temperature:	-50	Deg. F
Available Static Pressure:	50.0	psig
Design Flow Rate:	467,821	lbs/hr
Governing Smokeless Case:	Case A	
Design Smokeless Rate:	46,782	lbs/hr
Approximate Exit Velocity:	1122	ft/s
Mach No.:	1.00	
Approx. Tip Press. Drop:	41.29	psig

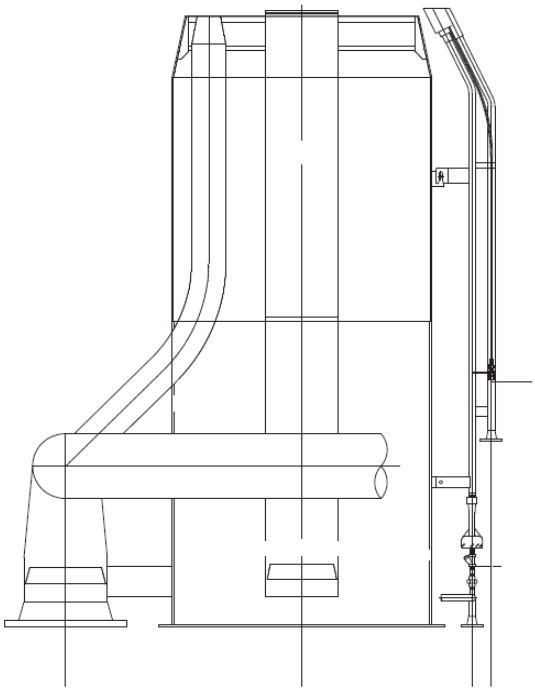

(Typical drawing only)

Construction:

Upper Section:	310 SS	Windshield:	NO
Lower Section:	Carbon Steel	Flame Retention Hub:	310 SS
Refractory:	None	Lifting Lugs:	NO
Refractory Thk:	N/A		

Surface Finish (Carbon Steel Surfaces):

Surface Preparation:	SSPC-SP6	Primer:	Inorganic Zinc
Paint (c. s. surfaces):	High Heat Aluminum		

Connections:

	Qty.	Size	Type	Material
N1 - HP Flare Gas Inlet:	1	18 "	Beveled ; Weld	Carbon Steel
N2 - Combustion Air Inlet:	1	50 "	Fab. Plate Flange	Carbon Steel
N3 - LP Flare Gas Inlet:	1	12 "	150# RF	Carbon Steel
N4 - Pilot Gas:	1	1 "	150# RF	Carbon Steel

Miscellaneous Notes:

1. Includes Integral Purge Reducing Velocity Seal.
2. Recommended Purge Rate for HP: 480 SCFH (Fuel Gas) or 180 (Nitrogen).
3. Recommended Purge Rate for LP Flare: 320 SCFH (Fuel Gas) or 60 SCFH (Nitrogen).
4. See Attachment C, Process Conditions, for HP / LP Process Conditions.

Confidential and Proprietary

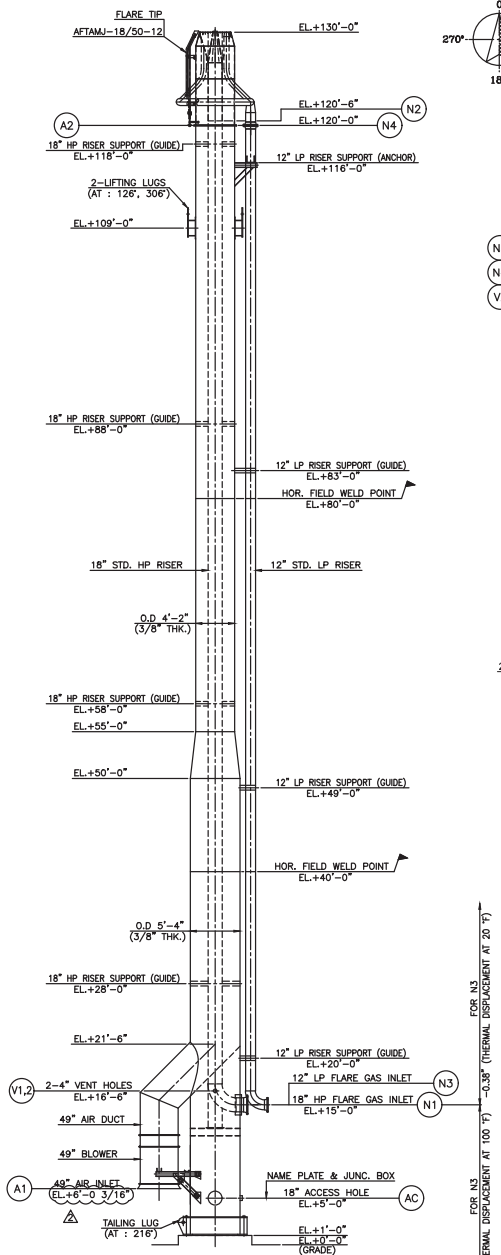

ELEVATION

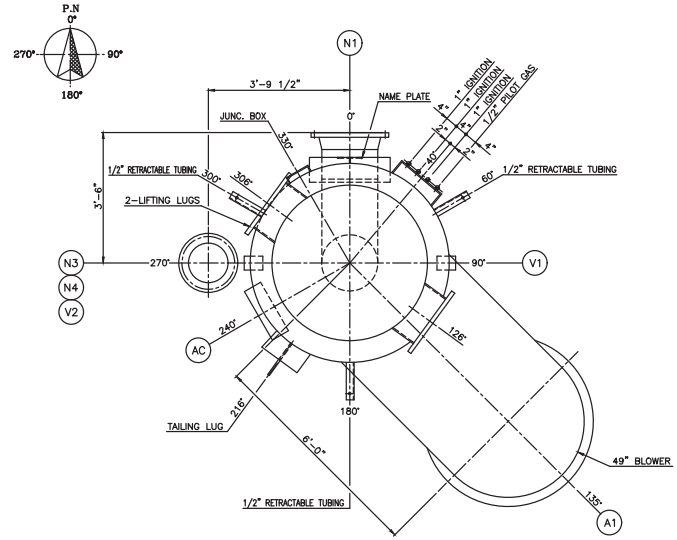

PLAN LAYOUT
(SCALE : 1/20)

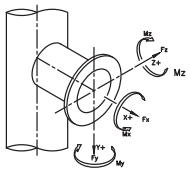

PIPE SIZE (IN)	Fx	Fy	Fz	Mx	My	Mz
	lb	lb	lb	lb-ft	lb-ft	lb-ft
12"	400	700	700	1000	750	750
18"	550	850	850	1210	900	900

MAX. ALLOWABLE INLET NOZZLE LOADS
(PER API537)

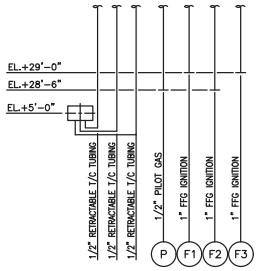

UTILITY PIPING DETAIL

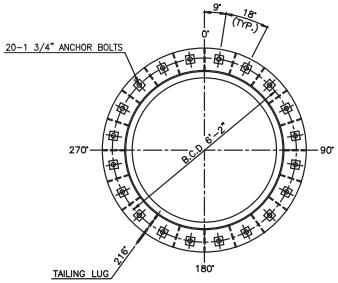

ANCHOR BOLT PLAN
(SCALE : 1/25)

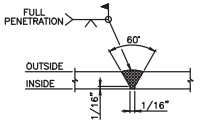

FIELD WELD DETAIL
(TYP.)

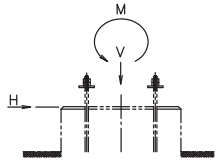

LOADING DATA
(FOR STACK RISER)

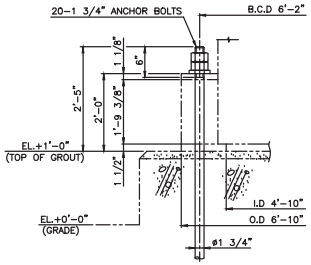

ANCHOR BOLT
(FOR STACK RISER)

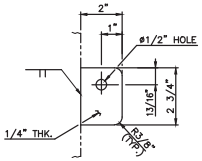

EARTH LUG
(AT : 90°, 270°)
(SCALE : 1/3)

LOADING DATA			
	V(kip)	H(kip)	M(kip-ft)
DEAD LOAD	66.5	0.0	0.0
WIND LOAD	0.0	18.3	1377.7
SEISMIC LOAD	2.2	1.5	138
NOZZLE LOAD	1.7	2.0	31.0

MATERIAL SPECIFICATIONS		DESIGN DATA	
HP GAS RISER	A333-6	TYPE	SELF SUPPORT TYPE
LP GAS RISER	A106-B	DESIGN CODE	ASME-STS-1 / AISC
AIR RISER	A36	WIND DESIGN	ASCE-7-10/ V=120mph/ EXP.=C
SKIRT	A36	SEISMIC DESIGN	ASCE-7-10/ SIE CLASS=0/ Ss=0.153/ S1=0.045/ I.F=1.25
FLARE TIP	SEE FLARE TIP DWG.	FLUID	FLARE GAS
RISER FLANGE (HP/LP)	A350-LF2 CL.1 / A105	DESIGN PRESS.(HP/LP/AIR)	50 / 50 / ATM psig
RISER FLANGE (AIR)	A36	DESIGN TEMP.(HP/LP/AIR)	-50~350 / 20~100 / AMB °F
RISER BOLT/NUT	A193-B7/A194-2H	M.A.W.P.(NEW & COLD)	- psig
RISER GASKET	C4401	OPERATING PRESS.(HP/LP)	- psig
BASE PLATE	A36	OPERATING TEMP.(HP/LP/AIR)	-50 / 25 / 20~100 °F
ANCHOR BOLT	F1554 Gr. 36	HYDRO'C TEST PRESS.	- psig
EARTH LUG	304 S.S	PNEUM'C TEST PRESS.	- psig
NAME PLATE	304 S.S	P.W.H.T.	NO
NAME PLATE BRACKET	A36 OR EQ.	RADIOGRAPH	AS PER ITP, SPOT
UTILITY LINE	A106-B	JOINT EFFICIENCY	85 %
CONDUIT LINE	C.S (GALV.)	CORROSION ALLOWANCE (HP/LP)	1/16" / 1/16" INCH
LIFTING LUG	A36	CORROSION ALLOWANCE (AIR)	0" INCH
TALING LUG	A36	PAINTING	SEE NOTE 2

NOZZLE AND CONNECTIONS

MARK	Q'TY	SIZE	SCH.	RATING	FACING	FLG. MAT'L	MATERIAL NOZZLE	SERVICE	REMARKS	S. TO FACE
N1	1	18"	STD.	ASME #150	WN, RF	A350-LF2 CL.1	A333-6	HP FLARE GAS INLET		3'-8"
N2	1	18"	STD.	-	-	-	A333-6	HP FLARE GAS OUTLET		SEE DWG.
N3	1	12"	STD.	ASME #150	WN, RF	A105	A106-B	LP FLARE GAS INLET		SEE DWG.
N4	1	12"	STD.	ASME #150	WN, RF	A105	A106-B	LP FLARE GAS OUTLET		SEE DWG.
A1	1	49"	3/8"	3/8" PLATE FLANGE	-	A36	A36	AIR INLET		SEE DWG.
A2	1	50"	3/8"	3/4" PLATE FLANGE	-	A36	A36	AIR OUTLET		SEE DWG.
V1,2	2	4"	STD.	-	-	-	A53-B	VENT HOLE		-
AC	1	18"	3/8"	-	-	-	A36	ACCESS HOLE		-
P	1	1/2"	40	ASME #150	SW, RF	A105	A106-B	PILOT GAS		SEE DWG.
F1~3	3	1"	40	ASME #150	SW, RF	A105	A106-B	FFG IGNITION		SEE DWG.

NOTE

1. FLANGE BOLTING TO STRADDLE CENTERLINES INDICATED BY CENTERLINE UNLESS NOTED OTHERWISE.
2. PAINTING
   - EXTERNAL CARBON STEEL SURFACE (AIR RISER & LP RISER)
     - PAINT SPEC. : 018193001-AE-SP-ME1007
     - CHART 4 : SSPC-SP10
     - AMERON, CARBOLINE, SHERWIN WILLIAMS
   - EXTERNAL CARBON STEEL SURFACE (HP RISER)
     - SSPC-SP10
     - PRIMER ONLY : SAME AS AIR & LP RISER
   - INTERNAL CARBON STEEL (SKIRT TO BLOWER PLATE)
     - SSPC-SP10
     - PRIMER ONLY : SAME AS AIR & LP RISER
3. ALL UTILITY PIPING LINES WILL BE SUPPLIED IN RANDOM LENGTH FOR FIELD WELDING AND INSTALLATION AT JOB SITE.
4. CONCRETE COMPRESSIVE STRENGTH AT 28 DAYS , FC' = 4000 PSI
5. LOADING DATA INCLUDES OVERAGE FACTOR OF 10% ABOVE CALCULATED LOADS.
6. FLARE STACK STRUCTURAL DESIGN ASSUMES ELASTIC FOUNDATION SUPPORT PER ASME STS-1.

REFERENCE DRAWING NO.	DESCRIPTION
SD-7438	FLARE TIP ASSEMBLY
SD-7509	CONDUIT DETAIL
SD-7508	PIPING DETAIL
SD-7507	PIPING ARRANGEMENT
SD-7506	RISER DETAIL
SD-7505	TEMPLATE DETAIL

NO	DATE	REVISION DESCRIPTION	BY	CKD	APP.
2	29NOV18	REVISED AS MARKED	MGE	CK	TRD
1	01NOV18	REVISED AS MARKED	MGE	CK	TRD

JOBSITE: Eddy County, New Mexico

END USER: XTO Energy

S.O. NO.: 35284 | P.O. NO.: 1707284-002 | APP KNB

ZEECO, INC.
22151 EAST 91st STREET
BROKEN ARROW, OK 74014
PHONE: (918) 258-8551
FAX: (918) 251-5519
www.zeeco.com
sales@zeeco.com

PROPRIETARY DATA IS INCLUDED IN THE INFORMATION DISCLOSED HEREIN AND IS THE PROPERTY OF ZEECO, INC. THIS INFORMATION IS SUBMITTED IN CONFIDENCE AND MUST BE USED IN CONNECTION WITH WORK DONE FOR ZEECO, INC. AND ALL RIGHTS OF DESIGN OR INVENTION ARE RESERVED. UNAUTHORIZED DISCLOSURE OR USE IS PROHIBITED BY LAW.

SELF SUPPORTED
FLARE STACK SYSTEM
GENERAL ARRANGEMENT & LOADING DATA

FOR: AUDUBON ENGINEERING

DRAWN	DATE
MGE	27JUL18
CHK	APP
CK	TRD
SCALE	REV
1/80	2

DRAWING NUMBER
SD-7441
SHT. 1 OF 1

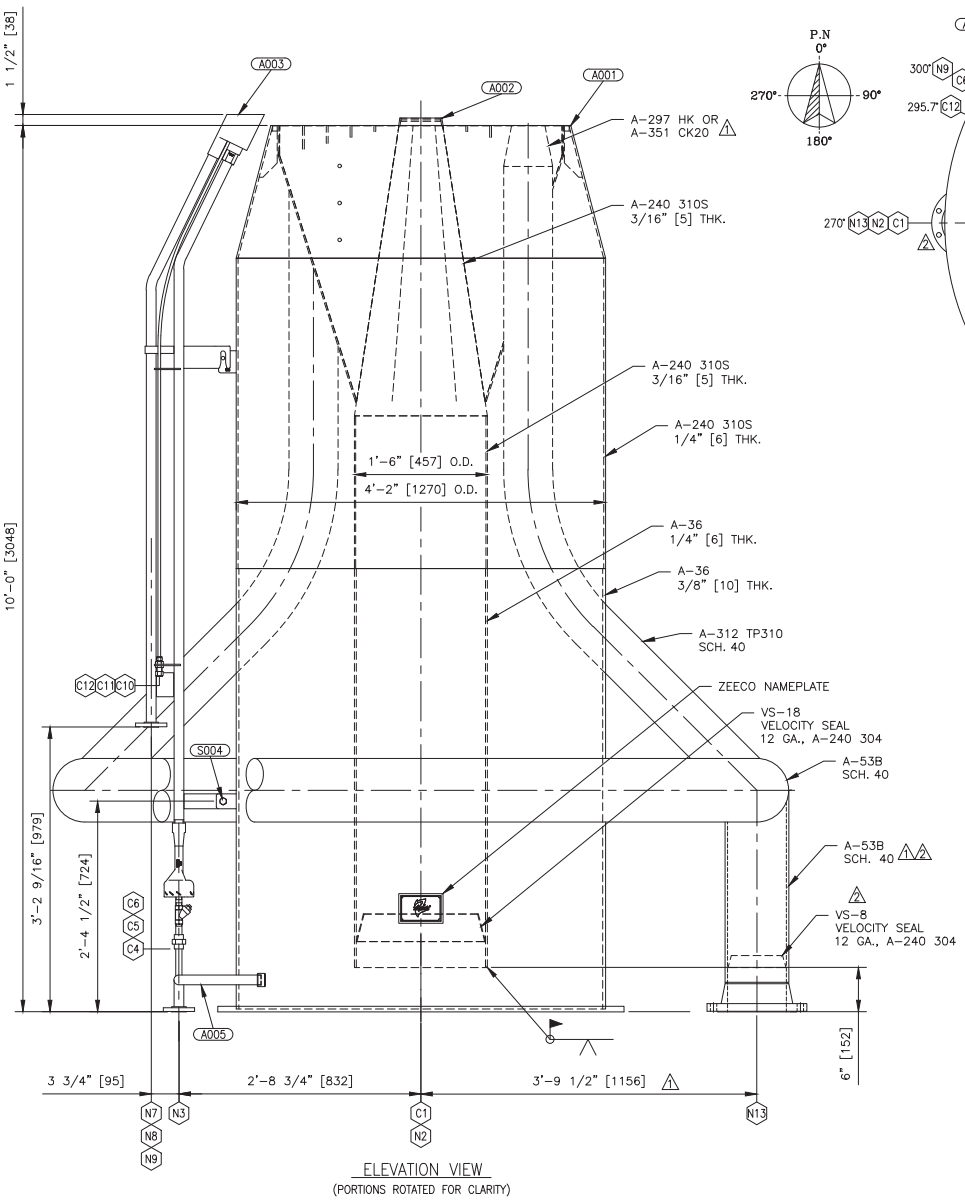

ELEVATION VIEW
(PORTIONS ROTATED FOR CLARITY)

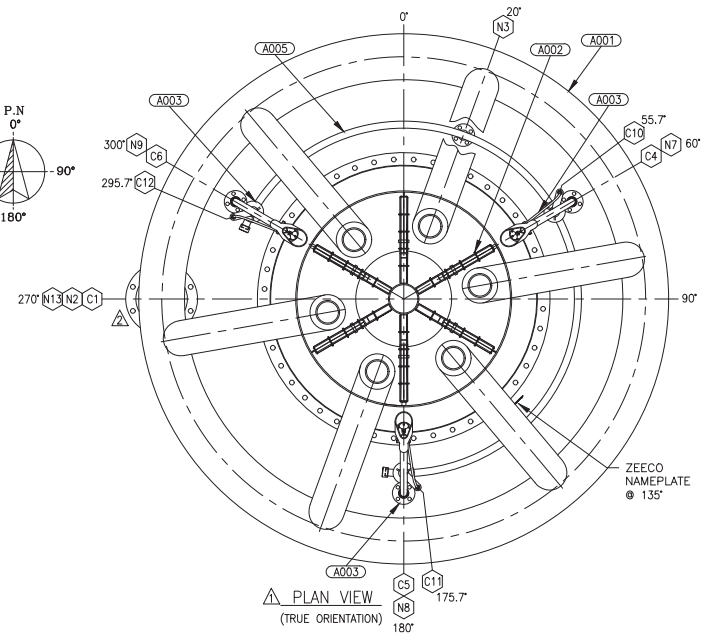

PLAN VIEW
(TRUE ORIENTATION)

ZEECO, INC.
Tulsa, Oklahoma USA
For parts & service: +1-918-258-8551 / sales@zeeco.com
AFTAMJ-18/50-8 FLARE TIP ASSEMBLY
TAG NUMBER: F-1
P.O. NO: 1707284-002
2018 — YEAR BUILT
35284 — S.O. NUMBER

ZEECO NAMEPLATE

DRAWING	DRAWING NUMBER
P & I DIAGRAM FOR FLARE SYSTEM	YA-3129
GENERAL ARRANGEMENT	SD-7441
LMC-3-DT/S FFG IGNITION RACK ASSEMBLY	WD-0071

-NOZZLE LEGEND-

ITEM	SERVICE	SIZE	RATING	TYPE	SCH./BORE	FLG. MAT'L
C1	HP FLARE GAS INLET	18"	N/A	B.W.	SCH. 10	N/A
N2	FLARE AIR INLET	55" O.D. X 3/4" THK. X 50 1/4" I.D. W/ (44) 7/8"⌀ HOLES ON A 52 1/2" B.C.				A-36
N3	PILOT GAS MANIFOLD INLET	1"	150#	RFSW	SCH.40	A-105
C4-C6	PILOT GAS INLET	1/2"	3000#	SW UNION	SCH. 40	A-182 F304/L
N7-N9	IGNITION GAS INLET	1"	150#	RFSW	SCH.40	A-182 F304
C10-C12	RT/C CONNECTION	1/2"	N/A	TUBE	N/A	A-479 TP316
N13	LP FLARE GAS INLET	8"	150#	RFWN	SCH. 40	A-105

NO.	DATE	REVISION DESCRIPTION	BY	CKD.	APP.
3	30nov18	APPROVED	MKN	MDK	TRD
2	12SEP18	REVISED PER ENGINEERING	ASW	MKN	TRD
1	28AUG18	REVISED PER ENGINEERING	MDK	MKN	TRD
0	20JUL18	ISSUED FOR APPROVAL	MKN	RLO	TRD

- SD-7438 PARTS LIST -

ITEM	QTY	Description	P/N
A001	1	AFTAMJ-18/50-8 PLENUM ASSEMBLY	KC-7653-A001
A002	1	AFTAMJ-18/50-8 CENTER ASSEMBLY	KC-7654-A002
A003	3	HSLF-Z-FFG-RDT/C PILOT ASSEMBLY	MB-4868-A003
		COMPLETE WITH:	
		HEI IGNITION PROBE	
		THERMOCOUPLE (SEE DATASHEET)	
		HSLF-Z MIXER BODY	
		HSLF-Z MIXER SPUD	
		STRAINER W/PLUG	
S004	3	HEAVY HEX BOLT: 1/2-13UNC X 1 1/2" LG. (A-193 B8M)	080001-0069
		W/ HEAVY HEX NUT: 1/2-13 UNC (A-194 GR. 8M)	081001-0135
A005	1	PILOT MANIFOLD ASSEMBLY	KC-7655-A005

-NOTES-

1. PILOT MIXER ORIFICE DRILLED: 3/64"Ø [1.19 mm]

2a. PILOT GAS CONSUMPTION LEAN FUEL: 65.12 SCFH @ 15 PSIG PER PILOT [1.74 Nm³ /HR @ 1.05 kg/cm² g]

2b. PILOT GAS CONSUMPTION RICH FUEL: 56.17 SCFH @ 15 PSIG PER PILOT [1.50 Nm³ /HR @ 1.05 kg/cm² g]

3. PILOT ORIFICE DRILLING BASED ON 923 BTU/SCF (LHV) [8683 kcal/Nm³] GAS WITH 0.563 SP. GR.

4a. THE HP FLARE TIP REQUIRES A CONTINUOUS PURGE OF 480 SCFH [12.86 Nm³ /HR] OR 180 SCFH [4.82 Nm³ /HR] (N_2) OF A GAS THAT WILL NOT GO TO DEW POINT AT OPERATING TEMPERATURES. TO ENSURE AIR DOES NOT MIGRATE DOWN THE FLARE STACK. IT SHOULD BE NOTED THAT DEPENDING UPON THE TURNDOWN OPERATION OF THE FAN AND THE TYPE OF PURGE GAS USED IT MAY BE NECESSARY TO INCREASE THIS MINIMUM PURGE RATE TO ENSURE PROPER COMBUSTION OF THE PURGE GAS DURING IDLE OPERATION.

4**b**. THE LP FLARE TIP REQUIRES A CONTINUOUS PURGE OF 706 SCFH [18.91 Nm³ /HR] OR 530 SCFH [14.20 Nm³ /HR] (N_2) OF A GAS THAT WILL NOT GO TO DEW POINT AT OPERATING TEMPERATURES. TO ENSURE AIR DOES NOT MIGRATE DOWN THE FLARE STACK. IT SHOULD BE NOTED THAT DEPENDING UPON THE TURNDOWN OPERATION OF THE FAN AND THE TYPE OF PURGE GAS USED IT MAY BE NECESSARY TO INCREASE THIS MINIMUM PURGE RATE TO ENSURE PROPER COMBUSTION OF THE PURGE GAS DURING IDLE OPERATION.

5. ALL FLANGE BOLTING TO STRADDLE NORMAL CENTERLINES, UNLESS NOTED OTHERWISE.

6. ALL TESTING PER INSPECTION TEST PLAN DOCUMENT NO. 35284-4010

7. THE PILOT THERMOCOUPLE IS FOR ON/OFF INDICATION ONLY, NOT FOR ACCURATE MEASUREMENT OF THE PILOT FLAME TEMPERATURE.

8. WHEN INSTALLING THE CENTER ASSEMBLY THE GAS EXIT ARMS MUST BE CENTERED ON THE PILOT AS PER THE PLAN VIEW.

9. APPROXIMATE WEIGHT FOR FLARE TIP ASS'Y: 4,731 LBS. [2,146 Kg]

10. APPROXIMATE WEIGHT FOR FOR EACH PILOT: 65 LBS. [29 Kg.]

11. ALL EXTERNAL CARBON STEEL SURFACES TO BE PREPARED PER SSPC-SP10. PRIME WITH ONE COAT INORGANIC ZINC (2-3 MILS DFT MIN.). PAINT ONE COAT HIGH HEAT ALUMINUM (1-2 MILS DFT MIN.). FINISH COLOR: ALUMINUM CUSTOMER PAINT SPEC: 018193001-AE-SP-ME1007

12. LP FLARE GAS INLET (N13) WILL NEED TO BE ABLE TO CONTRACT 0.34" VERTICALLY.

JOBSITE: EDDY COUNTY, NEW MEXICO

END USER: XTO ENERGY

S.O. NO.: 35284 | P.O. NO.: 1707284-002 | APP KNB

ZEECO, INC.
22151 EAST 91st STREET
BROKEN ARROW, OK 74014
PHONE: (918) 258-8551
FAX: (918) 251-5519
www.zeeco.com
sales@zeeco.com

PROPRIETARY DATA IS INCLUDED IN THE INFORMATION DISCLOSED HEREIN AND IS THE PROPERTY OF ZEECO,INC. THE INFORMATION IS SUBMITTED IN CONFIDENCE AND SHALL BE USED IN CONNECTION WITH WORK DONE FOR ZEECO, INC. OR ITS CLIENTS. NO OTHER USES OR RIGHTS ARE RESERVED. UNAUTHORIZED DISCLOSURE OR USE IS PROHIBITED BY LAW.

AFTAMJ-18/50-8 FLARE TIP ASSEMBLY

FOR: AUDUBON

DRAWN	DATE
MKN	20JUL18
CHK RLO	APP TRD
SCALE NONE	REV 3

DRAWING NUMBER SD-7438
SHT. 1 OF 1

Alycia Moak 12/3/2018 4:40:01 PM Q:\Job-Information\Flares\35000\35284 XTO Energy (Tyler Davidson)\Drafting\Customer\SD-7438-S1R3.dwg Mkn 11/30/2018 11:52:44 AM

Verified True & Correct
SO# 38126 PO# 1802759-032

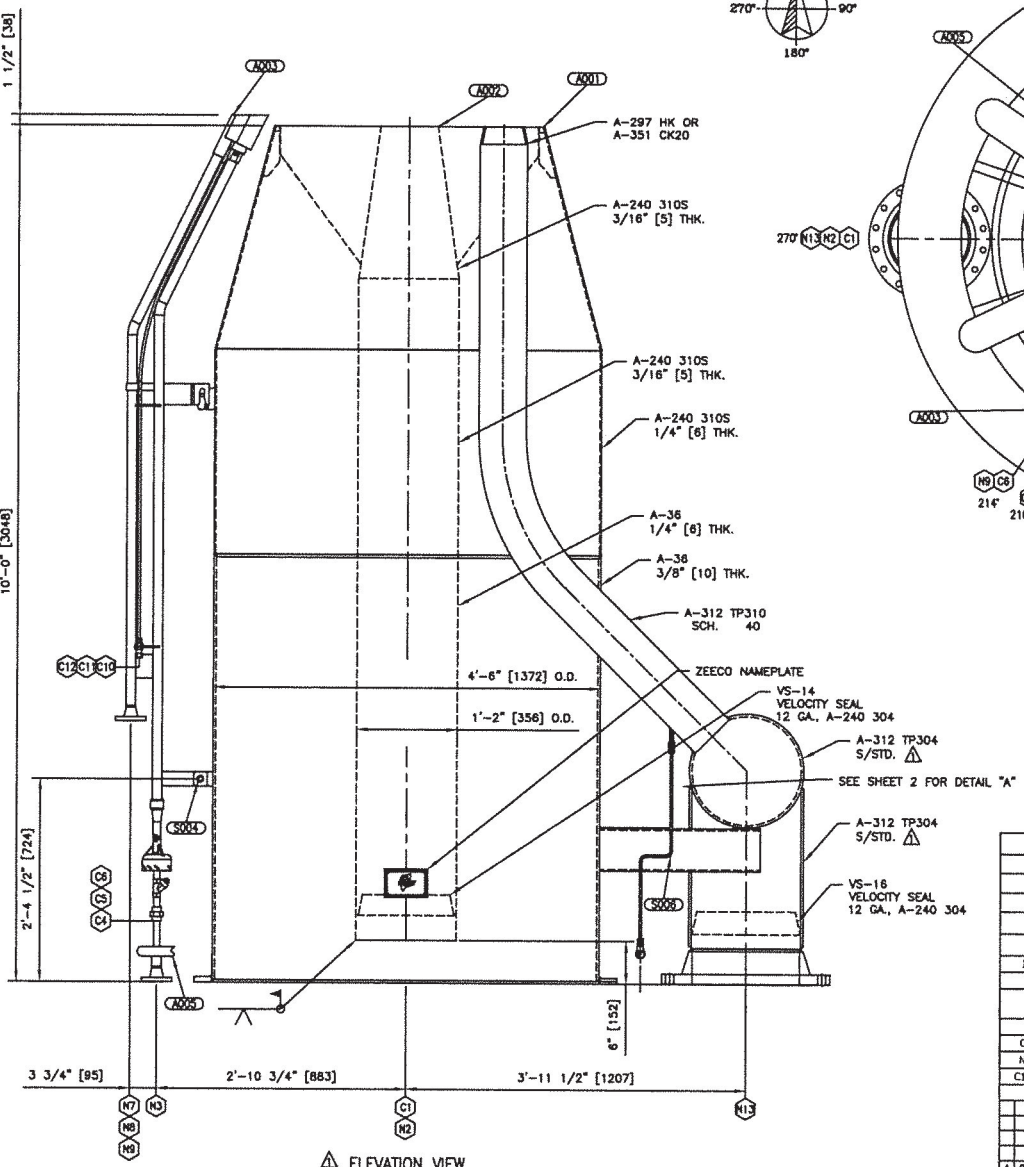

ELEVATION VIEW
(PORTIONS ROTATED FOR CLARITY)

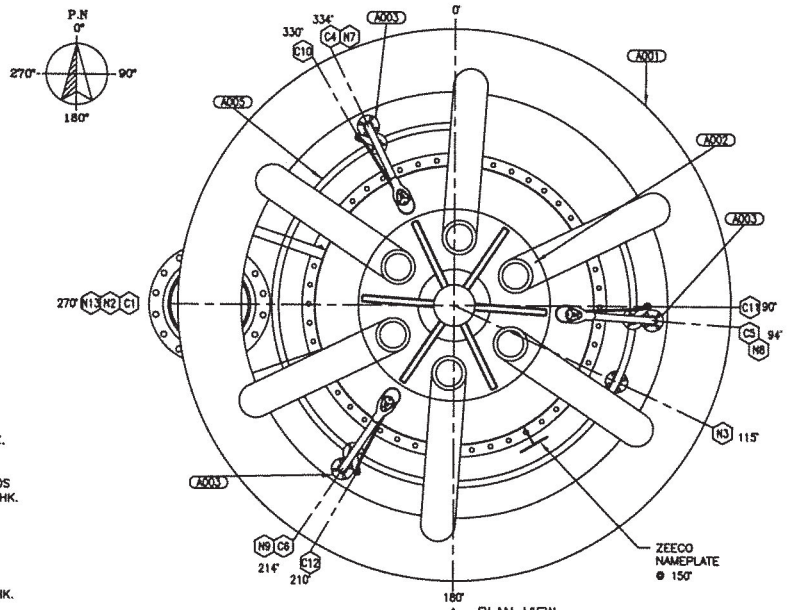

PLAN VIEW
(TRUE ORIENTATION)

ZEECO, INC.
Tulsa, Oklahoma USA
For parts & service: +1-918-258-8551 / sales@zeeco.com

AFTAMJ-14/54-16 FLARE TIP ASSEMBLY	
TAG NUMBER: F-2 CRYO FLARE	
P.O. NO: 1802759-032	
2019	38126
YEAR BUILT	S.O. NUMBER

ZEECO NAMEPLATE

DRAWING	DRAWING NUMBER
P & I DIAGRAM FOR FLARE SYSTEM	YA-3310
GENERAL ARRANGEMENT	SD-8259
LMC-3-DT/S FFG IGNITION RACK ASSEMBLY	WD-0610

-NOZZLE LEGEND-

ITEM	SERVICE	SIZE	RATING	TYPE	SCH./BORE	FLG. MAT'L
C1	LP FLARE GAS INLET	14"	N/A	B.W.	SCH. 10	N/A
N2	FLARE AIR INLET	59" O.D. X 3/4" THK. X 54 1/4" I.D. W/ (48) 7/8"ø HOLES ON A 56 1/2" B.C.				A-36
N3	PILOT GAS MANIFOLD INLET	1"	150#	RFWN	SCH.40	A-105
C4-C6	PILOT GAS INLET	1/2"	3000#	SW UNION	SCH. 40	A-182 F304/L
N7-N9	IGNITION GAS INLET	1"	150#	RFSW	SCH. 40	A-182 F304/L
C10-C12	RT/C CONNECTION	1/2"	N/A	TUBE	N/A	A-479 TP316
N13	HP FLARE GAS INLET	16"	150#	RFWN	SCH. 40	A-182 F304

NO.	DATE	REVISION DESCRIPTION	BY	CKD.	APP.
1	27MAR19	REVISED PER ENGINEERING / CUSTOMER COMMENTS	MKN/ASW	RLO	JSK
0	25FEB19	ISSUED FOR APPROVAL	MKN	RLO	JSK

- SD-8301 PARTS LIST -

ITEM	QTY	Description	P/N
A001	1	AFTAMJ-14/54-16 PLENUM ASSEMBLY	KC-8197-A001
A002	1	AFTAMJ-14/54-16 CENTER ASSEMBLY	KC-8198-A002
A003	3	HSLF-Z-FFG-RDT/C PILOT ASSEMBLY	MB-5232-A003
		COMPLETE WITH:	
		THERMOCOUPLE (SEE DATASHEET)	
		HSLF-Z MIXER BODY	
		HSLF-Z MIXER SPUD	
		STRAINER W/PLUG	
S004	3	HEAVY HEX BOLT: 1/2-13UNC X 1 1/2" LG. (A-193 B8M)	080001-0069
		W/ HEAVY HEX NUT: 1/2-13 UNC (A-194 GR. 8M)	081001-0135
A005	1	PILOT MANIFOLD ASSEMBLY	KC-8199-A005
S006	6	FUEL INJECTION TUBE	033005-0001

-NOTES-

1a. PILOT MIXER ORIFICE DRILLED: 3/64"Ø [1.19 mm]
1b. MJ ARMS PURGE ORIFICE DRILLED: #50 MTD [1.78 MM]
2a. PILOT GAS CONSUMPTION LEAN FUEL: 61.36 SCFH @ 15 PSIG PER PILOT
[1.64 Nm^3 /HR @ 1.05 kg/cm^2 g]
2b. PILOT GAS CONSUMPTION RICH FUEL: 53.49 SCFH @ 15 PSIG PER PILOT
[1.43 NM^3 /HR @ 1.05 KG/CM^2 G]
3a. PILOT ORIFICE DRILLING LEAN FUEL BASED ON 879 BTU/SCF (LHV)
[8269 kcal/Nm^3] GAS WITH 0.57 SP. GR.
3A. PILOT ORIFICE DRILLING RICH FUEL BASED ON 1158 BTU/SCF (LHV)
[10893 KCAL/NM^3] GAS WITH 0.75 SP. GR.
4a. THE HP FLARE TIP REQUIRES A CONTINUOUS PURGE OF 190 SCFH [5.09 Nm^3 /HR] OR
143 SCFH [3.83 Nm^3 /HR] (N_2) OF A GAS THAT WILL NOT GO TO DEW POINT AT
OPERATING TEMPERATURES. TO ENSURE AIR DOES NOT MIGRATE DOWN THE FLARE STACK.
IT SHOULD BE NOTED THAT DEPENDING UPON THE TURNDOWN OPERATION OF THE FAN
AND THE TYPE OF PURGE GAS USED IT MAY BE NECESSARY TO INCREASE
THIS MINIMUM PURGE RATE TO ENSURE PROPER COMBUSTION OF THE PURGE GAS
DURING IDLE OPERATION.
4b. THE LP FLARE TIP REQUIRES A CONTINUOUS PURGE OF 290 SCFH [7.77 Nm^3 /HR] OR
110 SCFH [2.95 Nm^3 /HR] (N_2) OF A GAS THAT WILL NOT GO TO DEW POINT AT
OPERATING TEMPERATURES. TO ENSURE AIR DOES NOT MIGRATE DOWN THE FLARE STACK.
IT SHOULD BE NOTED THAT DEPENDING UPON THE TURNDOWN OPERATION OF THE FAN
AND THE TYPE OF PURGE GAS USED IT MAY BE NECESSARY TO INCREASE
THIS MINIMUM PURGE RATE TO ENSURE PROPER COMBUSTION OF THE PURGE GAS
DURING IDLE OPERATION.
4c.
OF A GAS THAT WILL NOT GO TO DEW POINT AT OPERATING TEMPERATURES.
5. ALL FLANGE BOLTING TO STRADDLE NORMAL CENTERLINES, UNLESS NOTED OTHERWISE.
6. ALL TESTING PER INSPECTION TEST PLAN DOCUMENT NO. 38126-4010
7. THE PILOT THERMOCOUPLE IS FOR ON/OFF INDICATION ONLY, NOT FOR
ACCURATE MEASUREMENT OF THE PILOT FLAME TEMPERATURE.
8. WHEN INSTALLING THE CENTER ASSEMBLY THE GAS EXIT ARMS MUST
BE CENTERED ON THE PILOT AS PER THE PLAN VIEW.
9. APPROXIMATE WEIGHT FOR FLARE TIP ASS'Y: 5,755 LBS. [2610 Kg]
10. APPROXIMATE WEIGHT FOR FOR EACH PILOT: 65 LBS. [29 Kg.]
11. ALL EXTERNAL CARBON STEEL SURFACES TO BE PREPARED PER SSPC-SP10.
PRIME: 1 COAT CARBOZINC 11 (2-3 MILS DFT MIN.)
PAINT: 1 COAT THERMALINE 4900 (1-2 MILS DFT MIN.)
FINISH COLOR: CARLSBAD CANYON 9265
12. MJ ARM GAS CONSUMPTION: 137 SCFH @ 15 PSIG PER ARM
[3.67 NM^3 /HR @ 1.05 KG/CM^2 G]

JOBSITE: COWBOY CDP-EDDY COUNTY, NEW MEXICO
END USER: XTO ENERGY

S.O. NO.: 38126 | P.O. NO.: 1802759-032 | APP KNB

ZEECO

AFTAMJ-14/54-16
FLARE TIP ASSEMBLY

DRAWN MKN	DATE 25FEB19
CHK RLO	APP JSK
SCALE NONE	REV 1

FOR: AUDOBON

DRAWING NUMBER SD-8301 SHT. 1 OF 2

Q:\Job-Information\Phase1\38000\38126 XTO Energy (Jeff Kirkland)\Drafting\Customer\SD-8301-S1R1-.dwg 6/11/2019 3:42:27 AM Mercado_dectron

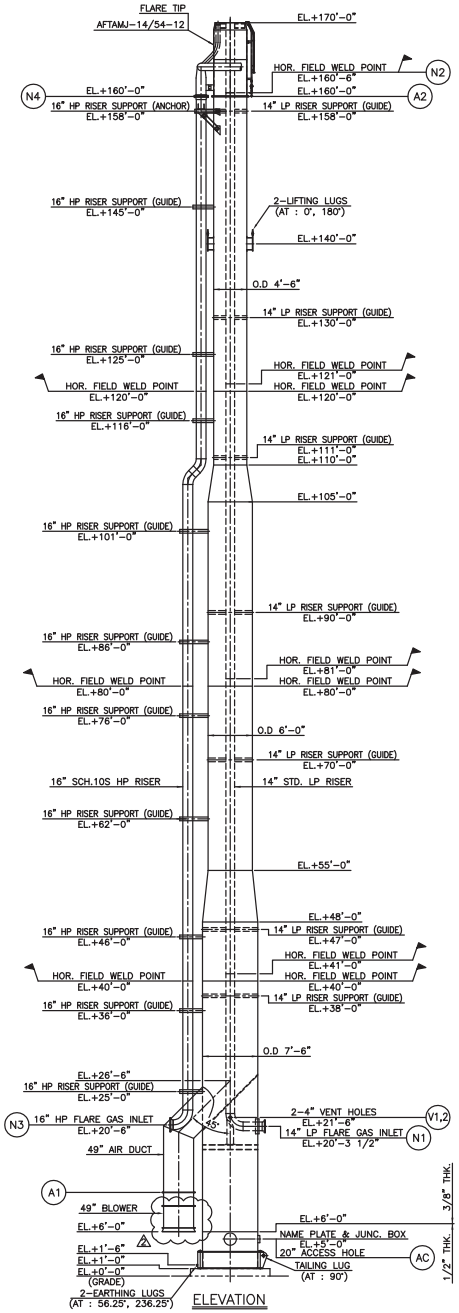

ELEVATION

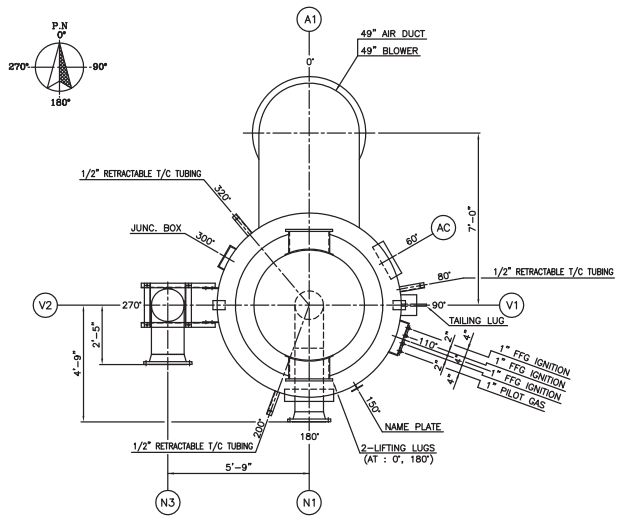

PLAN LAYOUT
(SCALE : 1/30)

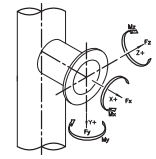

PIPE SIZE (IN)	Fx	Fy	Fz	Mx	My	Mz
	lb	lb	lb	lb-ft	lb-ft	lb-ft
14	450	750	750	1070	800	800
16	500	800	800	1140	850	850

MAX. ALLOWABLE INLET NOZZLE LOAD
(PER API 537)

MATERIAL SPECIFICATIONS		DESIGN DATA	
AIR RISER	A36 OR EQ.	TYPE	SELF SUPPORTED
LP GAS RISER	A106-B OR EQ.	STRUCTURE CODE	ASME STS-1 / AISC
HP GAS RISER	A312-TP304	WIND DESIGN	ASCE 7-10/ V=120mph/ EXP.=C
BOTTOM PLATE	A36 OR EQ.	SEISMIC DESIGN	ASCE 7-10/ Sw=0.153/ S1=0.045/ LF=1.25/ SITE CLASS=D
SKIRT	A36 OR EQ.	FLUID	FLARE GAS
FLARE TIP	SEE FLARE TIP DWG.	DESIGN PRESS.(HP/LP/AIR)	75 / 50 / ATM psig
AIR RISER FLANGE	A36 OR EQ.	DESIGN TEMP.(HP/LP/AIR)	-65~120/-10~120/-10~120 °F
LP RISER FLANGE	A105	OPERATING PRESS.(HP/LP/AIR)	66 / 1 / ATM psig
HP RISER FLANGE	A182-F304	OPERATING TEMP.(HP/LP/AIR)	-65~115/-5~115/-5~115 °F
RISER GASKET	C4401	AMBIENT TEMP (MIN./MAX.)	-5 ~ 115 °F
BASE PLATE	A36 OR EQ.	P.W.H.T.	NO
ANCHOR BOLT	F1554 GR. 36	NDE	AS PER ITP
EARTHING LUG	304 S.S	CORROSION ALLOWANCE (HP/LP/AIR)	0.0 / 1/16" / 1/16"
NAME PLATE	304 S.S	COATING	SEE NOTE 2
NAME PLATE BRACKET	A36 OR EQ.		
UTILITY LINE	A106-B		
TUBING LINE	316 S.S		
LIFTING LUG	A53-B/A36 OR EQ.		
TAILING LUG	A36 OR EQ.		

NOZZLE AND CONNECTIONS

MARK	Q'TY	SIZE	SCH.	RATING	FACING	FLG. MAT'L	MATERIAL NOZZLE	SERVICE	REMARKS
N1	1	14"	STD.	ASME #150	WN, RF	A105	A106-B OR EQ.	LP GAS INLET	
N2	1	14"	STD.	–	–	–	A106-B OR EQ.	LP GAS OUTLET	
N3	1	16"	SCH.10S	ASME #150	WN, RF	A182-F304	A403-WP304	HP GAS INLET	
N4	1	16"	SCH.10S	ASME #150	WN, RF	A182-F304	A312-TP304	HP GAS OUTLET	
A1	1	49"	3/8" THK.	PLATE FLANGE	–	A36 OR EQ.	A36 OR EQ.	AIR INLET	
A2	1	54"	3/8" THK.	PLATE FLANGE	–	A36 OR EQ.	A36 OR EQ.	AIR OUTLET	
V1,2	2	4"	STD.	–	–	–	A53-B ERW	VENT HOLE	
AC	1	20"	1/2" THK.	–	–	–	A36 OR EQ.	ACCESS HOLE	
P	1	1"	STD.	ASME #150	SW, RF	A105	A106-B	PILOT GAS	
F1~3	3	1"	STD.	ASME #150	SW, RF	A105	A106-B	FFG IGNITION	

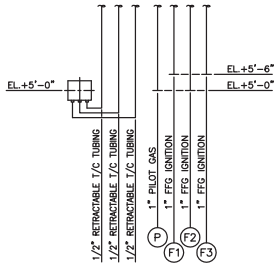

UTILITY PIPING DETAIL

NOTE

1. ALL FLANGE BOLTING TO STRADDLE CENTERLINES INDICATED BY CENTERLINE UNLESS NOTED OTHERWISE.
2. COATING SYSTEM (AS PER CHART 1, AUDUBON COATING SPEC.)
   - EXTERNAL CARBON STEEL FOR AIR RISER & UTILITY PIPING
     - SURFACE PREPARATION : SSPC-SP10
     - PRIMER : INORGANIC ZINC (DRY MILS 2~3)
     - BUILD : EPOXY (DRY MILS 4~6)
     - TOP : POLYURETHANE (DRY MILS 2~3)
     - TOP COAT COLOR : CARLSBAD CANYON 9265
3. ALL PIPING 2" & SMALLER AND ALL CONDUIT WILL BE SUPPLIED IN RANDOM LENGTH WITH LOOSE FITTING FOR FIELD ASSEMBLY.
4. LOADING DATA INCLUDES OVERAGE FACTOR OF 10% ABOVE CALCULATED LOADS.
5. FLARE STACK STRUCTURAL DESIGN ASSUMES ELASTIC FOUNDATION SUPPORT PER ASME STS-1.
6. ANCHOR BOLT ARE NOT BY ZEECO. (BY OTHERS)
7. CONCRETE COMPRESSIVE STRENGTH AT 28 DAYS , FC' = 4000 PSI.

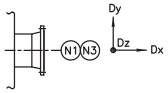

INLET DISPLACEMENT FOR "N1" LP NOZZLE

CASE	Dx (inch)	Dy (inch)	Dz (inch)
MIN. CONTRACTION	-0.03	-0.12	0.0
MAX. EXPANSION	0.02	0.08	0.0

INLET DISPLACEMENT FOR "N3" HP NOZZLE

CASE	Dx (inch)	Dy (inch)	Dz (inch)
MIN. CONTRACTION	-0.02	-1.66	0.0
MAX. EXPANSION	0.01	2.44	0.0

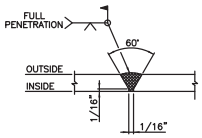

FIELD WELD DETAIL
(TYP.)
(SCALE : N/S)

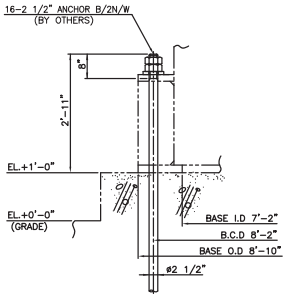

ANCHOR BOLT
(FOR STACK RISER)

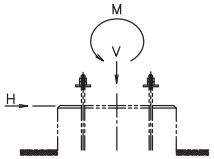

LOADING DATA
(FOR STACK RISER)

LOADING DATA			
	V(kip)	H(kip)	M(kip-ft)
DEAD LOAD	86.0	0.0	0.0
WIND LOAD	0.0	55.8	4668.1
SEISMIC LOAD	2.8	1.9	224.7
NOZZLE LOAD	1.7	2.0	31.0

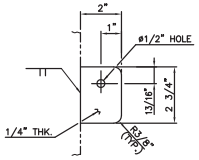

EARTHING LUG
(AT : 56.25', 236.25')
(SCALE : 1/3)

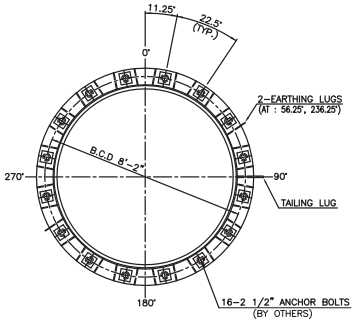

ANCHOR BOLT PLAN
(SCALE : 1/30)

REFERENCE DRAWING NO.	DESCRIPTION
SD-8264	CONDUIT DETAIL
SD-8263	PIPING DETAIL
SD-8262	PIPING ARRANGEMENT
SD-8261	RISER DETAIL
SD-8260	TEMPLATE DETAIL

NO	DATE	REVISION DESCRIPTION	BY	CKD	APP.
2	13JUN19	REVISED AS MARKED	MGE	KWH	JK
1	19MAR19	REVISED AS MARKED	MGE	KWH	JK

ZEECO, INC.
22151 EAST 91st STREET
BROKEN ARROW, OK 74014
PHONE: (918) 258-8551
FAX: (918) 251-5519
www.zeeco.com
sales@zeeco.com

PROPRIETARY DATA IS INCLUDED IN THE INFORMATION DISCLOSED HEREIN AND IS THE PROPERTY OF ZEECO,INC. THIS INFORMATION IS SUBMITTED IN CONFIDENCE AND MUST BE USED IN CONNECTION WITH WORK DONE FOR ZEECO, INC. AND ALL RIGHTS OF DESIGN OR INVENTION ARE RESERVED. UNAUTHORIZED DISCLOSURE OR USE IS PROHIBITED BY LAW.

PROJECT NAME: CRYO FLARE STACK
JOBSITE: CARLSBAD, NM.
END USER: XTO ENERGY
S.O. NO.: 38126
P.O. NO.: 1802759-032
APP KB

SELF SUPPORTED
FLARE STACK SYSTEM
GENERAL ARRANGEMENT & LOADING DATA
(FS-6960)

FOR: AUDUBON ENGINEERING

DRAWN MGE	DATE 15FEB19		
CHK KWH	APP JK		
SCALE 1/100	REV 2		
DRAWING NUMBER SD-8259 SHT. 1 OF 1			

• Burners
• Flares
• Incinerators
• Aftermarket Products and Services

22151 East 91st Street
Broken Arrow, OK 74014 USA
Ph: +1-918-258-8551
Fx: +1-918-251-5519
www.zeeco.com
sales@zeeco.com

General Process Performance Warranty for Flare System

Zeeco Inc. warrants the process performance of this unit will meet or exceed the contract requirements. Specific process performance requirements and acceptance criteria will be defined and mutually agreed to by both parties within two (2) months of receipt of the purchase order for supply of the equipment. Performance of the system is to be defined under normal ambient conditions of temperature, wind, etc. Such performance acceptance criteria in general to be as follows:

Based on provided Datasheet 019141001-AE-DS-ME0018 and Agreed Flow Rates:

1) Hydrocarbon Destruction efficiency of the unit will be 99% or higher when operated and maintained per the operating instructions and industry standards for this type of equipment.
2) The expected NOx and CO emissions will be 124 ppm and 204 ppm (corrected to 3% O2), +/- 10%, using calibrated measurement equipment under defined flow conditions at the specified gas composition in the contract and when operated and maintained per the operating instructions and industry standards for this type of equipment.. The specific operating temperature required to meet all three conditions will be determined upon field testing of the equipment.

Process performance of the system, if required, will be confirmed at a performance test to take place within 90 days after the unit is fully assembled and erected at site. The cost for Zeeco Inc. personnel to be on site for any testing is at the expense of the customer. The cost for testing equipment would also be to the account of the customer, if not readily available in the process system as installed. The specific conditions of the performance test, and the measurement and acceptance criteria for the above process performance points, including specific liability points associated with each process item, are to be mutually agreed to by both buyer and seller prior to shipment of the equipment. Successful completion of the process performance test at site will be deemed as compliance with the process performance warranty for any and all reasons. In the event the site performance test is postponed or delayed for more than 90 days after completion of erection of the unit at site, prior to the test, Zeeco Inc. will inspect the unit and any required refurbishment / repair to like new condition must be completed prior to testing, at purchaser's sole expense. If the testing is not completed within 6 months of the startup of the unit, the unit will have been deemed to have met any and all performance requirements.

Enclosed Flare Stack Specification Sheet

Client:	Audobon Engineering	Zeeco Ref.:	2018-02438FL-01	Date:	22-May-18
Location:	Carlsbad, NM	Client Ref.:	018193001-AE-RFQ	Rev.	1

General Information:

Tag No.:	EGF-1	
Overall Height:	40	ft
Model No.	EF-9/40	

Design Criteria:

Wind Design Code:	ASCE 7-10	
Seismic Design Code:	ASCE 7-10	
Importance Factor:	1.25	
Structural Design Code:	AISC	
Wind Speed (Structural):	120	mph
Seismic Zone:	0	
Max. Design Temperature:	300	Deg. F
Min. Design Temperature:	20	Deg. F
Design Pressure:	Atmospheric	
Stack Corrosion Allow.:	0.000	in.

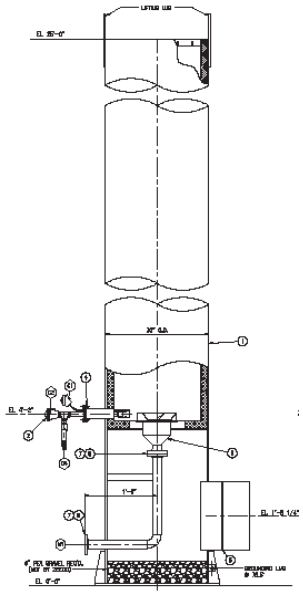

(Typical drawing only)

Construction:

Stack Material:	Carbon Steel		Ladders & Step-offs:	None	
Stack Height (approx.)	40	ft	Platform at tip:	None	
Stack Width (approx.):	9	ft	Additional Platforms:	None	
Flare Gas Inlet Diameter:	8	in			

Surface Preparation:	SSPC-SP-6	Primer:	Inorganic Zinc
		Finish Paint:	Per Specification

Utility piping:

Per Attached Utility Piping Scope of Supply

Miscellaneous Notes:

Confidential and Proprietary

G3520H

GENSET - WITHOUT RADIATOR

GAS ENGINE SITE SPECIFIC TECHNICAL DATA
EPIC

CATERPILLAR®

ENGINE SPEED (rpm):	1500
COMPRESSION RATIO:	12.1
AFTERCOOLER TYPE:	SCAC
AFTERCOOLER - STAGE 2 INLET (°F):	118
AFTERCOOLER - STAGE 1 INLET (°F):	192
JACKET WATER OUTLET (°F):	210
ASPIRATION:	TA
COOLING SYSTEM:	JW+OC+1AC, 2AC+GB
CONTROL SYSTEM:	ADEM4 W/ IM
EXHAUST MANIFOLD:	DRY
COMBUSTION:	LOW EMISSION
NOx EMISSION LEVEL (g/bhp-hr NOx):	0.5
SET POINT TIMING:	22

RATING STRATEGY:	HIGH ALTITUDE/AMBIENT
RATING LEVEL:	CONTINUOUS
FUEL SYSTEM:	CAT LOW PRESSURE WITH AIR FUEL RATIO CONTROL

SITE CONDITIONS:

FUEL:	Nat Gas
FUEL PRESSURE RANGE(psig): (See note 1)	2.0-5.0
FUEL METHANE NUMBER:	84.7
FUEL LHV (Btu/scf):	905
ALTITUDE(ft):	3400
INLET AIR TEMPERATURE(°F):	97
STANDARD RATED POWER:	3448 bhp@1500rpm
POWER FACTOR:	0.8
VOLTAGE(V):	4160-13800

				MAXIMUM RATING	SITE RATING AT MAXIMUM INLET AIR TEMPERATURE		
RATING		**NOTES**	**LOAD**	**100%**	**100%**	**75%**	**51%**
GENSET POWER	(WITH GEARBOX, WITHOUT FAN)	(2)(3)	ekW	2414	2377	1783	1213
GENSET POWER	(WITH GEARBOX, WITHOUT FAN)	(2)(3)	kVA	3018	2971	2228	1517
ENGINE POWER	(WITHOUT GEARBOX, WITHOUT FAN)	(3)	bhp	3372	3320	2497	1714
INLET AIR TEMPERATURE			°F	77	97	97	97
GENERATOR EFFICIENCY		(2)	%	96.8	96.8	96.5	95.7
GENSET EFFICIENCY	(ISO 3046/1)	(4)(5)	%	42.5	42.4	41.4	39.4
THERMAL EFFICIENCY		(4)(6)	%	41.9	42.0	43.7	46.3
TOTAL EFFICIENCY		(4)(7)	%	84.4	84.4	85.1	85.7
ENGINE DATA							
GENSET FUEL CONSUMPTION	(ISO 3046/1)	(8)	Btu/ekW-hr	8033	8043	8236	8665
GENSET FUEL CONSUMPTION	(NOMINAL)	(8)	Btu/ekW-hr	8310	8321	8520	8964
ENGINE FUEL CONSUMPTION	(NOMINAL)	(8)	Btu/bhp-hr	5950	5957	6083	6347
AIR FLOW (@inlet air temp, 14.7 psia)	(WET)	(9)	ft3/min	6523	6659	4959	3400
AIR FLOW	(WET)	(9)	lb/hr	28923	28467	21197	14532
FUEL FLOW (60°F, 14.7 psia)			scfm	369	364	280	200
INLET MANIFOLD PRESSURE		(10)	in Hg(abs)	139.4	137.3	103.1	71.8
EXHAUST TEMPERATURE - ENGINE OUTLET		(11)	°F	736	740	800	902
EXHAUST GAS FLOW (@engine outlet temp, 14.5 psia)	(WET)	(12)	ft3/min	15617	15416	12074	8973
EXHAUST GAS MASS FLOW	(WET)	(12)	lb/hr	29935	29465	21963	15081
MAX INLET RESTRICTION		(13)	in H2O	14.08	13.81	9.78	7.25
MAX EXHAUST RESTRICTION		(13)	in H2O	19.31	18.79	10.67	5.25
EMISSIONS DATA - ENGINE OUT							
NOx (as NO2)		(14)(15)	g/bhp-hr	0.50	0.50	0.50	0.50
CO		(14)(15)	g/bhp-hr	1.88	1.88	1.73	1.58
THC (mol. wt. of 15.84)		(14)(15)	g/bhp-hr	3.23	3.23	3.10	2.81
NMHC (mol. wt. of 15.84)		(14)(15)	g/bhp-hr	0.48	0.48	0.47	0.42
NMNEHC (VOCs) (mol. wt. of 15.84)		(14)(15)(16)	g/bhp-hr	0.39	0.39	0.37	0.34
HCHO (Formaldehyde)		(14)(15)	g/bhp-hr	0.26	0.26	0.25	0.24
CO2		(14)(15)	g/bhp-hr	416	417	425	441
EXHAUST OXYGEN		(14)(17)	% DRY	9.9	9.9	9.6	9.1
HEAT REJECTION							
LHV INPUT		(18)	Btu/min	334354	329631	253148	181284
HEAT REJ. TO JACKET WATER (JW)		(19)	Btu/min	36555	36328	31335	25731
HEAT REJ. TO ATMOSPHERE	(INCLUDES GENERATOR)	(19)	Btu/min	9213	9115	7544	6296
HEAT REJ. TO LUBE OIL (OC)		(19)	Btu/min	10542	10480	9402	8143
HEAT REJECTION TO EXHAUST (LHV TO 248°F)		(19)	Btu/min	64185	63689	54198	43947
HEAT REJ. TO A/C - STAGE 1 (1AC)		(19)(21)	Btu/min	26561	25742	14223	5537
HEAT REJ. TO A/C - STAGE 2 (2AC)		(19)(21)	Btu/min	19716	19272	12737	7316
HEAT REJECTION FROM GEARBOX (GB)		(19)	Btu/min	1130	1112	836	574
PUMP POWER		(20)	Btu/min	859	859	859	859
COOLING SYSTEM SIZING CRITERIA							
TOTAL JACKET WATER CIRCUIT (JW+OC+1AC)		(22)	Btu/min	84554	87900		
TOTAL STAGE 2 AFTERCOOLER CIRCUIT (2AC+GB)		(22)	Btu/min	23609	25089		
HEAT REJECTION TO EXHAUST (LHV TO 248°F)		(22)	Btu/min	70603	70058		
A cooling system safety factor of 0% has been added to the cooling system sizing criteria.							
MINIMUM HEAT RECOVERY							
TOTAL JACKET WATER CIRCUIT (JW+OC+1AC)		(23)	Btu/min	66565	65534		
TOTAL STAGE 2 AFTERCOOLER CIRCUIT (2AC+GB)		(23)	Btu/min	19803	19365		
HEAT REJECTION TO EXHAUST(LHV TO 248°F)		(23)	Btu/min	54700	50042		

CONDITIONS AND DEFINITIONS

Engine rating obtained and presented in accordance with ISO 3046/1, adjusted for fuel, site altitude and site inlet air temperature. 100% rating at maximum inlet air temperature is the maximum engine capability for the specified fuel at site altitude and maximum site inlet air temperature. Maximum rating is the maximum capability at the specified aftercooler inlet temperature for the specified fuel at site altitude and reduced inlet air temperature. Lowest load point is the lowest continuous duty operating load allowed. No overload permitted at rating shown.

PREPARED BY: Darrell Paull, Hol Cat

For notes information consult page three.

Data generated by Gas Engine Rating Pro Version 6.09.01

Ref. Data Set EM0923-04-001, Printed 23Jan2019

Engine Power vs. Inlet Air Temperature

Data represents temperature sweep at 3400 ft and 1500 rpm

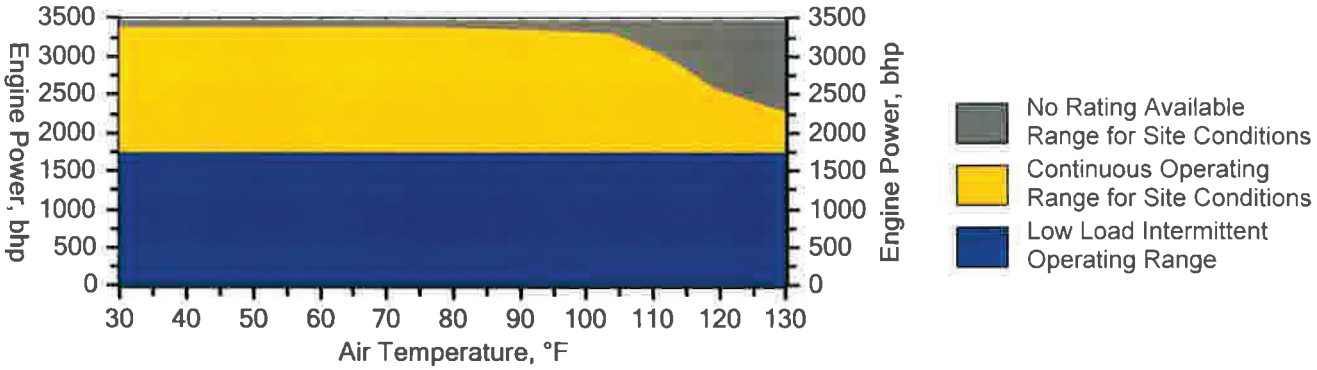

NOTES

1. Fuel pressure range specified is to the engine fuel control valve. Additional fuel train components should be considered in pressure and flow calculations

2. Generator efficiencies, power factor, and voltage are based on specified generator. [Genset Power (ekW) is calculated as: (Engine Power (bkW) - Gearbox Power (bkW)) x Generator Efficiency], [Genset Power (kVA) is calculated as: (Engine Power (bkW) - Gearbox Power (bkW)) x Generator Efficiency / Power Factor]

3. Rating is with two engine driven water pumps. Tolerance is (+)3, (-)0% of full load. All derates are applied without pumps , then pump power is subtracted to obtain final rating.

4. Efficiency represents a Closed Crankcase Ventilation (CCV) system installed on the engine

5. Genset Effieciency published in accordance with ISO 3046/1.

6. Thermal Efficiency is calculated based on energy recovery from the jacket water, lube oil, 1st stage aftercooler, and exhaust to 248ºF with engine operation at ISO 3046/1 Genset Efficiency, and assumes unburned fuel is converted in an oxidation catalyst.

7. Total efficiency is calculated as: Genset Efficiency + Thermal Efficiency. Tolerance is ±10% of full load data.

8. ISO 3046/1 Genset fuel consumption tolerance is (+)5, (-)0% at the specified power factor. Nominal genset and engine fuel consumption tolerance is ± 1.5% of full load data at the specified power factor.

9. Air flow value is on a 'wet' basis. Flow is a nominal value with a tolerance of ± 5 %.

10. Inlet manifold pressure is a nominal value with a tolerance of ± 5 %.

11. Exhaust temperature is a nominal value with a tolerance of (+)63°F, (-)54°F.

12. Exhaust flow value is on a "wet" basis. Flow is a nominal value with a tolerance of ± 6 %.

13. Inlet and Exhaust Restrictions are maximum allowed values at the corresponding loads. Increasing restrictions beyond what is specified will result in a significant engine derate.

14. Emissions data is at engine exhaust flange prior to any after treatment.

15. NOx tolerance's are ± 18% of specified value. All other emission values listed are higher than nominal levels to allow for instrumentation, measurement, and engine-to-engine variations. They indicate the maximum values expected under steady state conditions. Fuel methane number cannot vary more than ± 3. THC, NMHC, and NMNEHC do not include aldehydes

16. VOCs - Volatile organic compounds as defined in US EPA 40 CFR 60, subpart JJJJ

17. Exhaust Oxygen level is the result of adjusting the engine to operate at the specified NOx level. Tolerance is ± 0.5.

18. LHV rate tolerance is ± 1.5%.

19. Heat rejection values are representative of site conditions. Tolerances, based on treated water, are ± 10% for jacket water circuit, ± 50% for atmosphere, ± 20% for lube oil circuit, ± 10% for exhaust, ± 5% for aftercooler circuit, and ± 5% for Gearbox.

20. Pump power includes engine driven jacket water and aftercooler water pumps. Engine brake power includes effects of pump power.

21. Aftercooler heat rejection is nominal for site conditions and does not include an aftercooler heat rejection factor. Aftercooler heat rejection values at part load are for reference only.

22. Cooling system sizing criteria represent the expected maximum circuit heat rejection for the ratings at site, with applied plus tolerances. Total circuit heat rejection is calculated using formulas referenced in the notes on the standard tech data sheet with the following qualifications. Aftercooler heat rejection data (1AC & 2AC) is based on the standard rating. Jacket Water (JW), Oil Cooler (OC), and Gearbox (GB) heat rejection values are based on the respective site or maximum column. Aftercooler heat rejection factors (ACHRF) are specific for the site elevation and inlet air temperature specified in the site or maximum column, referenced from the table on the standard data sheet

23. Minimum heat recovery values represent the expected minimum heat recovery for the site, with applied minus tolerances. Do not use these values for cooling system sizing.

Constituent	Abbrev	Mole %	Norm
Water Vapor	H2O	0.0000	0.0000
Methane	CH4	92.2700	92.2700
Ethane	C2H6	2.5000	2.5000
Propane	C3H8	0.5000	0.5000
Isobutane	iso-C4H1O	0.0000	0.0000
Norbutane	nor-C4H1O	0.2000	0.2000
Isopentane	iso-C5H12	0.0000	0.0000
Norpentane	nor-C5H12	0.1000	0.1000
Hexane	C6H14	0.0500	0.0500
Heptane	C7H16	0.0000	0.0000
Nitrogen	N2	3.4800	3.4800
Carbon Dioxide	CO2	0.9000	0.9000
Hydrogen Sulfide	H2S	0.0000	0.0000
Carbon Monoxide	CO	0.0000	0.0000
Hydrogen	H2	0.0000	0.0000
Oxygen	O2	0.0000	0.0000
Helium	HE	0.0000	0.0000
Neopentane	neo-C5H12	0.0000	0.0000
Octane	C8H18	0.0000	0.0000
Nonane	C9H20	0.0000	0.0000
Ethylene	C2H4	0.0000	0.0000
Propylene	C3H6	0.0000	0.0000
TOTAL (Volume %)		100.0000	100.0000

Fuel Makeup:	Nat Gas
Unit of Measure:	English

Calculated Fuel Properties

Caterpillar Methane Number:	84.7
Lower Heating Value (Btu/scf):	905
Higher Heating Value (Btu/scf):	1004
WOBBE Index (Btu/scf):	1168
THC: Free Inert Ratio:	21.83
Total % Inerts (% N2, CO2, He):	4.38%
RPC (%) (To 905 Btu/scf Fuel):	100%
Compressibility Factor:	0.998
Stoich A/F Ratio (Vol/Vol):	9.45
Stoich A/F Ratio (Mass/Mass):	15.75
Specific Gravity (Relative to Air):	0.600
Fuel Specific Heat Ratio (K):	1.313

CONDITIONS AND DEFINITIONS

Caterpillar Methane Number represents the knock resistance of a gaseous fuel. It should be used with the Caterpillar Fuel Usage Guide for the engine and rating to determine the rating for the fuel specified. A Fuel Usage Guide for each rating is included on page 2 of its standard technical data sheet.

RPC always applies to naturally aspirated (NA) engines, and turbocharged (TA or LE) engines only when they are derated for altitude and ambient site conditions.

Project specific technical data sheets generated by the Caterpillar Gas Engine Rating Pro program take the Caterpillar Methane Number and RPC into account when generating a site rating.

Fuel properties for Btu/scf calculations are at 60F and 14.696 psia

Caterpillar shall have no liability in law or equity, for damages, consequently or otherwise, arising from use of program and related material or any part thereof.

FUEL LIQUIDS

Field gases, well head gases, and associated gases typically contain liquid water and heavy hydrocarbons entrained in the gas. To prevent detonation and severe damage to the engine, hydrocarbon liquids must not be allowed to enter the engine fuel system. To remove liquids, a liquid separator and coalescing filter are recommended, with an automatic drain and collection tank to prevent contamination of the ground in accordance with local codes and standards.

To avoid water condensation in the engine or fuel lines, limit the relative humidity of water in the fuel to 80% at the minimum fuel operating temperature.

PREPARED BY: Darrell Paull, Hol Cat
Data generated by Gas Engine Rating Pro Version 6.09.01
Ref. Data Set EM0923-04-001, Printed 23Jan2019

For flares subject to Chapter 115, Subchapter H, relating to highly reactive volatile organic compounds, flow rate and composition data required by 30 TAC 115.725–26 should be used to determine emissions for any portions of 2009 that HRVOC monitors were installed and operational.

In the absence of monitoring data, selection of the most accurate method may sometimes require exercising scientific judgment. For example, when using the results of a one-time performance test, the test conditions should be compared to the flare's actual operating conditions during the inventory year to determine whether the test accurately represents the flare's performance. If test conditions do not accurately model flare operation, then engineering determinations based on detailed process evaluation may provide the best data.

NO_x and CO Emissions

To calculate NO_x and CO emissions, the net heating value of the flared gas must be known. Using the actual short-term flared gas composition and flow rate data for the inventory year, calculate the net heating value of the flared gas and the total heat release for each short time period. Use these total heat release data, in conjunction with the appropriate emission factors from TCEQ Air Permits guidance, to determine NO_x and CO emissions for each time segment. Since the calculated net heating value of the gas and the assist gas type will determine the appropriate emission factors, carefully select the correct factors for each flare from Table A-6.

Calculate emissions using the most accurate data for the gas flow rate and composition available. (See "Flared Gas Flow Rate and Composition" earlier in this supplement for more information on preferred data.)

Table A-6. TCEQ Air Permits Flare Emission Factors

Contaminant	Assist Type	Waste Gas Stream Net Heating Value[a,b]	Emission Factor
NO_x	Steam	High Btu	0.0485 lb/MMBtu
		Low Btu	0.068 lb/MMBtu
	Air or Unassisted	High Btu	0.138 lb/MMBtu
		Low Btu	0.0641 lb/MMBtu
CO	Steam	High Btu	0.3503 lb/MMBtu
		Low Btu	0.3465 lb/MMBtu
	Air or Unassisted	High Btu	0.2755 lb/MMBtu
		Low Btu	0.5496 lb/MMBtu

[a] High Btu: > 1000 Btu/scf

[b] Low Btu: 192–1000 Btu/scf

TABLE 1.4-2. EMISSION FACTORS FOR CRITERIA POLLUTANTS AND GREENHOUSE GASES FROM NATURAL GAS COMBUSTION[a]

Pollutant	Emission Factor ($lb/10^6$ scf)	Emission Factor Rating
CO_2[b]	120,000	A
Lead	0.0005	D
N_2O (Uncontrolled)	2.2	E
N_2O (Controlled-low-NO_X burner)	0.64	E
PM (Total)[c]	7.6	D
PM (Condensable)[c]	5.7	D
PM (Filterable)[c]	1.9	B
SO_2[d]	0.6	A
TOC	11	B
Methane	2.3	B
VOC	5.5	C

[a] Reference 11. Units are in pounds of pollutant per million standard cubic feet of natural gas fired. Data are for all natural gas combustion sources. To convert from $lb/10^6$ scf to $kg/10^6$ m^3, multiply by 16. To convert from $lb/10^6$ scf to 1b/MMBtu, divide by 1,020. The emission factors in this table may be converted to other natural gas heating values by multiplying the given emission factor by the ratio of the specified heating value to this average heating value. TOC = Total Organic Compounds. VOC = Volatile Organic Compounds.

[b] Based on approximately 100% conversion of fuel carbon to CO_2. $CO_2[lb/10^6 \text{ scf}] = (3.67)(CON)(C)(D)$, where CON = fractional conversion of fuel carbon to CO_2, C = carbon content of fuel by weight (0.76), and D = density of fuel, 4.2×10^4 $lb/10^6$ scf.

[c] All PM (total, condensible, and filterable) is assumed to be less than 1.0 micrometer in diameter. Therefore, the PM emission factors presented here may be used to estimate PM_{10}, $PM_{2.5}$ or PM_1 emissions. Total PM is the sum of the filterable PM and condensible PM. Condensible PM is the particulate matter collected using EPA Method 202 (or equivalent). Filterable PM is the particulate matter collected on, or prior to, the filter of an EPA Method 5 (or equivalent) sampling train.

[d] Based on 100% conversion of fuel sulfur to SO_2. Assumes sulfur content is natural gas of 2,000 grains/10^6 scf. The SO_2 emission factor in this table can be converted to other natural gas sulfur contents by multiplying the SO_2 emission factor by the ratio of the site-specific sulfur content (grains/10^6 scf) to 2,000 grains/10^6 scf.

TABLE 1.4-3. EMISSION FACTORS FOR SPECIATED ORGANIC COMPOUNDS FROM NATURAL GAS COMBUSTION[a]

CAS No.	Pollutant	Emission Factor ($lb/10^6$ scf)	Emission Factor Rating
91-57-6	2-Methylnaphthalene[b, c]	2.4E-05	D
56-49-5	3-Methylchloranthrene[b, c]	<1.8E-06	E
	7,12-Dimethylbenz(a)anthracene[b,c]	<1.6E-05	E
83-32-9	Acenaphthene[b,c]	<1.8E-06	E
203-96-8	Acenaphthylene[b,c]	<1.8E-06	E
120-12-7	Anthracene[b,c]	<2.4E-06	E
56-55-3	Benz(a)anthracene[b,c]	<1.8E-06	E
71-43-2	Benzene[b]	2.1E-03	B
50-32-8	Benzo(a)pyrene[b,c]	<1.2E-06	E
205-99-2	Benzo(b)fluoranthene[b,c]	<1.8E-06	E
191-24-2	Benzo(g,h,i)perylene[b,c]	<1.2E-06	E
205-82-3	Benzo(k)fluoranthene[b,c]	<1.8E-06	E
106-97-8	Butane	2.1E+00	E
218-01-9	Chrysene[b,c]	<1.8E-06	E
53-70-3	Dibenzo(a,h)anthracene[b,c]	<1.2E-06	E
25321-22-6	Dichlorobenzene[b]	1.2E-03	E
74-84-0	Ethane	3.1E+00	E
206-44-0	Fluoranthene[b,c]	3.0E-06	E
86-73-7	Fluorene[b,c]	2.8E-06	E
50-00-0	Formaldehyde[b]	7.5E-02	B
110-54-3	Hexane[b]	1.8E+00	E
193-39-5	Indeno(1,2,3-cd)pyrene[b,c]	<1.8E-06	E
91-20-3	Naphthalene[b]	6.1E-04	E
109-66-0	Pentane	2.6E+00	E
85-01-8	Phenanathrene[b,c]	1.7E-05	D

TABLE 1.4-3. EMISSION FACTORS FOR SPECIATED ORGANIC COMPOUNDS FROM NATURAL GAS COMBUSTION (Continued)

CAS No.	Pollutant	Emission Factor ($lb/10^6$ scf)	Emission Factor Rating
74-98-6	Propane	1.6E+00	E
129-00-0	Pyrene[b, c]	5.0E-06	E
108-88-3	Toluene[b]	3.4E-03	C

[a] Reference 11. Units are in pounds of pollutant per million standard cubic feet of natural gas fired. Data are for all natural gas combustion sources. To convert from $lb/10^6$ scf to $kg/10^6$ m^3, multiply by 16. To convert from $1b/10^6$ scf to lb/MMBtu, divide by 1,020. Emission Factors preceeded with a less-than symbol are based on method detection limits.

[b] Hazardous Air Pollutant (HAP) as defined by Section 112(b) of the Clean Air Act.

[c] HAP because it is Polycyclic Organic Matter (POM). POM is a HAP as defined by Section 112(b) of the Clean Air Act.

[d] The sum of individual organic compounds may exceed the VOC and TOC emission factors due to differences in test methods and the availability of test data for each pollutant.

TABLE 1.4-4. EMISSION FACTORS FOR METALS FROM NATURAL GAS COMBUSTION[a]

CAS No.	Pollutant	Emission Factor ($lb/10^6$ scf)	Emission Factor Rating
7440-38-2	Arsenic[b]	2.0E-04	E
7440-39-3	Barium	4.4E-03	D
7440-41-7	Beryllium[b]	<1.2E-05	E
7440-43-9	Cadmium[b]	1.1E-03	D
7440-47-3	Chromium[b]	1.4E-03	D
7440-48-4	Cobalt[b]	8.4E-05	D
7440-50-8	Copper	8.5E-04	C
7439-96-5	Manganese[b]	3.8E-04	D
7439-97-6	Mercury[b]	2.6E-04	D
7439-98-7	Molybdenum	1.1E-03	D
7440-02-0	Nickel[b]	2.1E-03	C
7782-49-2	Selenium[b]	<2.4E-05	E
7440-62-2	Vanadium	2.3E-03	D
7440-66-6	Zinc	2.9E-02	E

[a] Reference 11. Units are in pounds of pollutant per million standard cubic feet of natural gas fired. Data are for all natural gas combustion sources. Emission factors preceeded by a less-than symbol are based on method detection limits. To convert from $lb/10^6$ scf to $kg/10^6$ m^3, multiply by l6. To convert from $lb/10^6$ scf to 1b/MMBtu, divide by 1,020.

[b] Hazardous Air Pollutant as defined by Section 112(b) of the Clean Air Act.

Table 3.1-3. EMISSION FACTORS FOR HAZARDOUS AIR POLLUTANTS FROM NATURAL GAS-FIRED STATIONARY GAS TURBINES[a]

Emission Factors[b] - Uncontrolled		
Pollutant	Emission Factor (lb/MMBtu)[c]	Emission Factor Rating
1,3-Butadiene[d]	< 4.3 E-07	D
Acetaldehyde	4.0 E-05	C
Acrolein	6.4 E-06	C
Benzene[e]	1.2 E-05	A
Ethylbenzene	3.2 E-05	C
Formaldehyde[f]	7.1 E-04	A
Naphthalene	1.3 E-06	C
PAH	2.2 E-06	C
Propylene Oxide[d]	< 2.9 E-05	D
Toluene	1.3 E-04	C
Xylenes	6.4 E-05	C

[a] SCC for natural gas-fired turbines include 2-01-002-01, 2-02-002-01, 2-02-002-03, 2-03-002-02, and 2-03-002-03. Hazardous Air Pollutants as defined in Section 112 (b) of the *Clean Air Act*.

[b] Factors are derived from units operating at high loads (≥ 80 percent load) only. For information on units operating at other loads, consult the background report for this chapter (Reference 16), available at "www.epa.gov/ttn/chief".

[c] Emission factors based on an average natural gas heating value (HHV) of 1020 Btu/scf at 60°F. To convert from (lb/MMBtu) to (lb/10^6 scf), multiply by 1020. These emission factors can be converted to other natural gas heating values by multiplying the given emission factor by the ratio of the specified heating value to this heating value.

[d] Compound was not detected. The presented emission value is based on one-half of the detection limit.

[e] Benzene with SCONOX catalyst is 9.1 E-07, rating of D.

[f] Formaldehyde with SCONOX catalyst is 2.0 E-05, rating of D.

loading operation, resulting in high levels of vapor generation and loss. If the turbulence is great enough, liquid droplets will be entrained in the vented vapors.

A second method of loading is submerged loading. Two types are the submerged fill pipe method and the bottom loading method. In the submerged fill pipe method, the fill pipe extends almost to the bottom of the cargo tank. In the bottom loading method, a permanent fill pipe is attached to the cargo tank bottom. During most of submerged loading by both methods, the fill pipe opening is below the liquid surface level. Liquid turbulence is controlled significantly during submerged loading, resulting in much lower vapor generation than encountered during splash loading.

The recent loading history of a cargo carrier is just as important a factor in loading losses as the method of loading. If the carrier has carried a nonvolatile liquid such as fuel oil, or has just been cleaned, it will contain vapor-free air. If it has just carried gasoline and has not been vented, the air in the carrier tank will contain volatile organic vapors, which will be expelled during the loading operation along with newly generated vapors.

Cargo carriers are sometimes designated to transport only one product, and in such cases are practicing "dedicated service". Dedicated gasoline cargo tanks return to a loading terminal containing air fully or partially saturated with vapor from the previous load. Cargo tanks may also be "switch loaded" with various products, so that a nonvolatile product being loaded may expel the vapors remaining from a previous load of a volatile product such as gasoline. These circumstances vary with the type of cargo tank and with the ownership of the carrier, the petroleum liquids being transported, geographic location, and season of the year.

One control measure for vapors displaced during liquid loading is called "vapor balance service", in which the cargo tank retrieves the vapors displaced during product unloading at bulk plants or service stations and transports the vapors back to the loading terminal. Figure 5.2-5 shows a tank truck in vapor balance service filling a service station underground tank and taking on displaced gasoline vapors for return to the terminal. A cargo tank returning to a bulk terminal in vapor balance service normally is saturated with organic vapors, and the presence of these vapors at the start of submerged loading of the tanker truck results in greater loading losses than encountered during nonvapor balance, or "normal", service. Vapor balance service is usually not practiced with marine vessels, although some vessels practice emission control by means of vapor transfer within their own cargo tanks during ballasting operations, discussed below.

Emissions from loading petroleum liquid can be estimated (with a probable error of ±30 percent)[4] using the following expression:

$$L_L = 12.46 \frac{SPM}{T} \qquad (1)$$

where:

L_L = loading loss, pounds per 1000 gallons (lb/10^3 gal) of liquid loaded

S = a saturation factor (see Table 5.2-1)
P = true vapor pressure of liquid loaded, pounds per square inch absolute (psia) (see Section 7.1, "Organic Liquid Storage Tanks")
M = molecular weight of vapors, pounds per pound-mole (lb/lb-mole) (see Section 7.1, "Organic Liquid Storage Tanks")
T = temperature of bulk liquid loaded, °R (°F + 460)

Table 3.2-2. UNCONTROLLED EMISSION FACTORS FOR 4-STROKE LEAN-BURN ENGINES[a]
(SCC 2-02-002-54)

Pollutant	Emission Factor (lb/MMBtu)[b] (fuel input)	Emission Factor Rating
Criteria Pollutants and Greenhouse Gases		
NO_x[c] 90 - 105% Load	4.08 E+00	B
NO_x[c] <90% Load	8.47 E-01	B
CO[c] 90 - 105% Load	3.17 E-01	C
CO[c] <90% Load	5.57 E-01	B
CO_2[d]	1.10 E+02	A
SO_2[e]	5.88 E-04	A
TOC[f]	1.47 E+00	A
Methane[g]	1.25 E+00	C
VOC[h]	1.18 E-01	C
PM10 (filterable)[i]	7.71 E-05	D
PM2.5 (filterable)[i]	7.71 E-05	D
PM Condensable[j]	9.91 E-03	D
Trace Organic Compounds		
1,1,2,2-Tetrachloroethane[k]	<4.00 E-05	E
1,1,2-Trichloroethane[k]	<3.18 E-05	E
1,1-Dichloroethane	<2.36 E-05	E
1,2,3-Trimethylbenzene	2.30 E-05	D
1,2,4-Trimethylbenzene	1.43 E-05	C
1,2-Dichloroethane	<2.36 E-05	E
1,2-Dichloropropane	<2.69 E-05	E
1,3,5-Trimethylbenzene	3.38 E-05	D
1,3-Butadiene[k]	2.67E-04	D
1,3-Dichloropropene[k]	<2.64 E-05	E
2-Methylnaphthalene[k]	3.32 E-05	C
2,2,4-Trimethylpentane[k]	2.50 E-04	C
Acenaphthene[k]	1.25 E-06	C

Table 3.2-2. UNCONTROLLED EMISSION FACTORS FOR 4-STROKE LEAN-BURN ENGINES (Continued)

Pollutant	Emission Factor (lb/MMBtu)[b] (fuel input)	Emission Factor Rating
Acenaphthylene[k]	5.53 E-06	C
Acetaldehyde[k,l]	8.36 E-03	A
Acrolein[k,l]	5.14 E-03	A
Benzene[k]	4.40 E-04	A
Benzo(b)fluoranthene[k]	1.66 E-07	D
Benzo(e)pyrene[k]	4.15 E-07	D
Benzo(g,h,i)perylene[k]	4.14 E-07	D
Biphenyl[k]	2.12 E-04	D
Butane	5.41 E-04	D
Butyr/Isobutyraldehyde	1.01 E-04	C
Carbon Tetrachloride[k]	<3.67 E-05	E
Chlorobenzene[k]	<3.04 E-05	E
Chloroethane	1.87 E-06	D
Chloroform[k]	<2.85 E-05	E
Chrysene[k]	6.93 E-07	C
Cyclopentane	2.27 E-04	C
Ethane	1.05 E-01	C
Ethylbenzene[k]	3.97 E-05	B
Ethylene Dibromide[k]	<4.43 E-05	E
Fluoranthene[k]	1.11 E-06	C
Fluorene[k]	5.67 E-06	C
Formaldehyde[k,l]	5.28 E-02	A
Methanol[k]	2.50 E-03	B
Methylcyclohexane	1.23 E-03	C
Methylene Chloride[k]	2.00 E-05	C
n-Hexane[k]	1.11 E-03	C
n-Nonane	1.10 E-04	C

Table 3.2-2. UNCONTROLLED EMISSION FACTORS FOR 4-STROKE LEAN-BURN ENGINES
(Continued)

Pollutant	Emission Factor (lb/MMBtu)[b] (fuel input)	Emission Factor Rating
n-Octane	3.51 E-04	C
n-Pentane	2.60 E-03	C
Naphthalene[k]	7.44 E-05	C
PAH[k]	2.69 E-05	D
Phenanthrene[k]	1.04 E-05	D
Phenol[k]	2.40 E-05	D
Propane	4.19 E-02	C
Pyrene[k]	1.36 E-06	C
Styrene[k]	<2.36 E-05	E
Tetrachloroethane[k]	2.48 E-06	D
Toluene[k]	4.08 E-04	B
Vinyl Chloride[k]	1.49 E-05	C
Xylene[k]	1.84 E-04	B

[a] Reference 7. Factors represent uncontrolled levels. For NO_x, CO, and PM10, "uncontrolled" means no combustion or add-on controls; however, the factor may include turbocharged units. For all other pollutants, "uncontrolled" means no oxidation control; the data set may include units with control techniques used for NOx control, such as PCC and SCR for lean burn engines, and PSC for rich burn engines. Factors are based on large population of engines. Factors are for engines at all loads, except as indicated. SCC = Source Classification Code. TOC = Total Organic Compounds. PM-10 = Particulate Matter ≤ 10 microns (μm) aerodynamic diameter. A "<" sign in front of a factor means that the corresponding emission factor is based on one-half of the method detection limit.

[b] Emission factors were calculated in units of (lb/MMBtu) based on procedures in EPA Method 19. To convert from (lb/MMBtu) to (lb/10^6 scf), multiply by the heat content of the fuel. If the heat content is not available, use 1020 Btu/scf. To convert from (lb/MMBtu) to (lb/hp-hr) use the following equation:

$$\text{lb/hp-hr} = (\text{lb/MMBtu})\,(\text{heat input, MMBtu/hr})\,(1/\text{operating HP, 1/hp})$$

[c] Emission tests with unreported load conditions were not included in the data set.

[d] Based on 99.5% conversion of the fuel carbon to CO_2. CO_2 [lb/MMBtu] = (3.67)(%CON)(C)(D)(1/h), where %CON = percent conversion of fuel carbon to CO_2, C = carbon content of fuel by weight (0.75), D = density of fuel, 4.1 E+04 lb/10^6 scf, and

ELECTRONIC CODE OF FEDERAL REGULATIONS

e-CFR data is current as of August 23, 2017

Title 40 → Chapter I → Subchapter C → Part 98 → Subpart C → Appendix

Title 40: Protection of Environment
PART 98—MANDATORY GREENHOUSE GAS REPORTING
Subpart C—General Stationary Fuel Combustion Sources

Table C-1 to Subpart C of Part 98—Default CO_2 Emission Factors and High Heat Values for Various Types of Fuel

Link to an amendment published at 81 FR 89252, Dec. 9, 2016.

Default CO_2 Emission Factors and High Heat Values for Various Types of Fuel

Fuel type	Default high heat value	Default CO_2 emission factor
Coal and coke	mmBtu/short ton	kg CO_2/mmBtu
Anthracite	25.09	103.69
Bituminous	24.93	93.28
Subbituminous	17.25	97.17
Lignite	14.21	97.72
Coal Coke	24.80	113.67
Mixed (Commercial sector)	21.39	94.27
Mixed (Industrial coking)	26.28	93.90
Mixed (Industrial sector)	22.35	94.67
Mixed (Electric Power sector)	19.73	95.52
Natural gas	mmBtu/scf	kg CO_2/mmBtu
(Weighted U.S. Average)	1.026×10^{-3}	53.06
Petroleum products	mmBtu/gallon	kg CO_2/mmBtu
Distillate Fuel Oil No. 1	0.139	73.25
Distillate Fuel Oil No. 2	0.138	73.96
Distillate Fuel Oil No. 4	0.146	75.04
Residual Fuel Oil No. 5	0.140	72.93
Residual Fuel Oil No. 6	0.150	75.10
Used Oil	0.138	74.00
Kerosene	0.135	75.20
Liquefied petroleum gases (LPG)[1]	0.092	61.71
Propane[1]	0.091	62.87
Propylene[2]	0.091	67.77
Ethane[1]	0.068	59.60
Ethanol	0.084	68.44
Ethylene[2]	0.058	65.96
Isobutane[1]	0.099	64.94
Isobutylene[1]	0.103	68.86
Butane[1]	0.103	64.77
Butylene[1]	0.105	68.72
Naphtha (<401 deg F)	0.125	68.02
Natural Gasoline	0.110	66.88
Other Oil (>401 deg F)	0.139	76.22
Pentanes Plus	0.110	70.02
Petrochemical Feedstocks	0.125	71.02
Petroleum Coke	0.143	102.41
Special Naphtha	0.125	72.34
Unfinished Oils	0.139	74.54
Heavy Gas Oils	0.148	74.92
Lubricants	0.144	74.27
Motor Gasoline	0.125	70.22
Aviation Gasoline	0.120	69.25
Kerosene-Type Jet Fuel	0.135	72.22
Asphalt and Road Oil	0.158	75.36
Crude Oil	0.138	74.54
Other fuels—solid	mmBtu/short ton	kg CO_2/mmBtu
Municipal Solid Waste	9.95[3]	90.7
Tires	28.00	85.97
Plastics	38.00	75.00

Petroleum Coke	30.00	102.41
Other fuels—gaseous	mmBtu/scf	kg CO_2/mmBtu
Blast Furnace Gas	0.092×10^{-3}	274.32
Coke Oven Gas	0.599×10^{-3}	46.85
Propane Gas	2.516×10^{-3}	61.46
Fuel Gas[4]	1.388×10^{-3}	59.00
Biomass fuels—solid	mmBtu/short ton	kg CO_2/mmBtu
Wood and Wood Residuals (dry basis)[5]	17.48	93.80
Agricultural Byproducts	8.25	118.17
Peat	8.00	111.84
Solid Byproducts	10.39	105.51
Biomass fuels—gaseous	mmBtu/scf	kg CO_2/mmBtu
Landfill Gas	0.485×10^{-3}	52.07
Other Biomass Gases	0.655×10^{-3}	52.07
Biomass Fuels—Liquid	mmBtu/gallon	kg CO_2/mmBtu
Ethanol	0.084	68.44
Biodiesel (100%)	0.128	73.84
Rendered Animal Fat	0.125	71.06
Vegetable Oil	0.120	81.55

[1]The HHV for components of LPG determined at 60 °F and saturation pressure with the exception of ethylene.

[2]Ethylene HHV determined at 41 °F (5 °C) and saturation pressure.

[3]Use of this default HHV is allowed only for: (a) Units that combust MSW, do not generate steam, and are allowed to use Tier 1; (b) units that derive no more than 10 percent of their annual heat input from MSW and/or tires; and (c) small batch incinerators that combust no more than 1,000 tons of MSW per year.

[4]Reporters subject to subpart X of this part that are complying with §98.243(d) or subpart Y of this part may only use the default HHV and the default CO_2 emission factor for fuel gas combustion under the conditions prescribed in §98.243(d)(2)(i) and (d)(2)(ii) and §98.252(a)(1) and (a)(2), respectively. Otherwise, reporters subject to subpart X or subpart Y shall use either Tier 3 (Equation C-5) or Tier 4.

[5]Use the following formula to calculate a wet basis HHV for use in Equation C-1: $HHV_w = ((100 - M)/100)*HHV_d$ where HHV_w = wet basis HHV, M = moisture content (percent) and HHV_d = dry basis HHV from Table C-1.

[78 FR 71950, Nov. 29, 2013]

Need assistance?

ELECTRONIC CODE OF FEDERAL REGULATIONS

e-CFR data is current as of August 23, 2017

Title 40 → Chapter I → Subchapter C → Part 98 → Subpart C → Appendix

Title 40: Protection of Environment
PART 98—MANDATORY GREENHOUSE GAS REPORTING
Subpart C—General Stationary Fuel Combustion Sources

Table C-2 to Subpart C of Part 98—Default CH_4 and N_2O Emission Factors for Various Types of Fuel

Link to an amendment published at 81 FR 89252, Dec. 9, 2016.

Fuel type	Default CH_4 emission factor (kg CH_4/mmBtu)	Default N_2O emission factor (kg N_2O/mmBtu)
Coal and Coke (All fuel types in Table C-1)	1.1×10^{-02}	1.6×10^{-03}
Natural Gas	1.0×10^{-03}	1.0×10^{-04}
Petroleum (All fuel types in Table C-1)	3.0×10^{-03}	6.0×10^{-04}
Fuel Gas	3.0×10^{-03}	6.0×10^{-04}
Municipal Solid Waste	3.2×10^{-02}	4.2×10^{-03}
Tires	3.2×10^{-02}	4.2×10^{-03}
Blast Furnace Gas	2.2×10^{-05}	1.0×10^{-04}
Coke Oven Gas	4.8×10^{-04}	1.0×10^{-04}
Biomass Fuels—Solid (All fuel types in Table C-1, except wood and wood residuals)	3.2×10^{-02}	4.2×10^{-03}
Wood and wood residuals	7.2×10^{-03}	3.6×10^{-03}
Biomass Fuels—Gaseous (All fuel types in Table C-1)	3.2×10^{-03}	6.3×10^{-04}
Biomass Fuels—Liquid (All fuel types in Table C-1)	1.1×10^{-03}	1.1×10^{-04}

Note: Those employing this table are assumed to fall under the IPCC definitions of the “Energy Industry” or “Manufacturing Industries and Construction”. In all fuels except for coal the values for these two categories are identical. For coal combustion, those who fall within the IPCC “Energy Industry” category may employ a value of 1g of CH_4/mmBtu.

[78 FR 71952, Nov. 29, 2013]

Need assistance?

Table II: Facility/Compound Specific Fugitive Emission Factors

Equipment/Service	Compound Specific See Section I for more information			Facility Specific[1]					
	Ethylene Oxide[2] w/LDAR	Phosgene[3] w/LDAR	Butadiene w/LDAR[4]	Petroleum Marketing Terminal[5, 6] w/28PET	Oil and Gas ProductionOperation[6]				Refinery[6]
					Gas	Heavy Oil < 20 API	Light Oil	Water/ Light Oil	
Valves					0.00992	0.0000185	0.0055	0.000216	
Gas/Vapor	0.000444	0.00000216	0.001105	0.0000287					0.059
Light Liquid	0.00055	0.00000199	0.00314	0.0000948					0.024
Heavy Liquid				0.0000948					0.00051
Pumps	0.042651	0.0000201	0.05634		0.00529	0.00113[7]	0.02866	0.000052	
Light Liquid				0.00119					0.251
Heavy Liquid				0.00119					0.046
Flanges/Connectors[11]	0.000555	0.00000011	0.000307		0.00086	0.00000086	0.000243	0.000006	0.00055
					0.00044	0.0000165	0.000463	0.000243	
Gas/Vapor				0.000092604					
Light Liquid				0.00001762					
Heavy Liquid				0.0000176					
Compressors	0.000767		0.000004		0.0194	0.0000683	0.0165	0.0309	1.399
Relief Valve	0.000165	0.0000162	0.02996		0.0194	0.0000683	0.0165	0.0309	0.35
Open-ended Lines[8]	0.001078	0.00000007	0.00012		0.00441	0.000309	0.00309	0.00055	0.0051
Sampling[9]	0.000088		0.00012						0.033
Other[10]					0.0194	0.0000683	0.0165	0.0309	
Gas/Vapor				0.000265					
Light/Heavy Liquid				0.000287					
Process Drains					0.0194	0.0000683	0.0165	0.0309	0.07

Endnotes Table II

1. **Factors give the total organic compound emission rate. Multiply by the weight percent of non-methane, non-ethane organics to get the VOC emission rate.**
2. **These emission factors require the use of the 28MID fugitive program. Monitoring must occur at a leak definition of 500 ppmv. No additional control credit can be applied to these factors except 28CNTQ and 28CNTA. Emission factors are from EOIC Fugitive Emission Study, summer 1988.**
3. **These emission factors require the use of the 28MID fugitive program. Monitoring must occur at a leak definition of 50 ppmv. No additional control credit can be applied to these factors. Emission factors are from Phosgene Panel Study, summer 1988.**
4. **These emission factors require the use of the 28MID fugitive program. Monitoring must occur at a leak definition of 100 ppmv. No additional control credit can be applied to these factors. Emission factors are from Randall, J. L., et al., Radian Corporation. Fugitive Emissions from the 1,3-butadiene Production Industry: A Field Study. Final Report. Prepared for the 1,3-Butadiene Panel for the Chemical Manufacturers Association. April 1989.**
5. **Control credit is included in the factor; no additional control credit can be applied to these factors. Monthly 28 PET inspection is required.**
6. **Factors are taken from EPA Document EPA-453/R-95-017, November 1995, pages 2-13, 2-14, and 2-15.**
7. **Heavy liquid oil – Pump factor was not derived during the API study. The factor is the SOCMI without C_2 Heavy Liquid – Pump factor with a 93% reduction credit for the physical inspection.**

Table III: Leak Detection and Repair (LDAR) Program Instrument Monitoring Options

LDAR Program	28M	28RCT	28VHP	28MID	28LAER	28CNTQ	28CNTA
Leak Definition for Pumps and Compressors	10,000 ppmv	10,000 ppmv	2,000 ppmv	500 ppmv	500 ppmv	N/A	N/A
Leak Definition for All Other Components	10,000 ppmv	500 ppmv	500 ppmv	500 ppmv	500 ppmv	500 ppmv	500 ppmv
Applicable Vapor Pressure	>0.5 psia at 100°F	>0.044 psia at 68°F	>0.044 psia at 68°F	>0.044 psia at 68°F	>0.044 psia at 68°F	>0.044 psia at 68°F	>0.044 psia at 68°F
Monitoring Frequency	Quarterly	Quarterly	Quarterly	Quarterly	Quarterly	Quarterly	Annually
Directed/Nondirected Maintenance	Nondirected	Nondirected	Nondirected	Directed	Directed	Nondirected	Nondirected
Most Common State/Federal Programs with Similar Requirements	40 CFR Part 60 Subpart VV 40 CFR Part 61 30 TAC §115.322	30 TAC §115.352[1]	40 CFR Part 60 Subpart VVa 40 CFR Part 63 Subparts H, CC	N/A	Nonattainment NSR	N/A	40 CFR Part 60Subpart VVa, 40 CFR Part 63 Subparts H, CC

Endnotes Table III

[1] **Except in Gregg, Nueces, and Victoria Counties where 28M applies.**

Table V: Control Efficiencies for LDAR

Equipment/Service	28M	28RCT	28VHP	28MID	28LAER	28CNTQ	28CNTA	28PI	28AVO[9]
Valves[1]									97%
Gas/Vapor	75%	97%	97%	97%	97%			30%	
Light Liquid	75%	97%	97%	97%	97%			30%	
Heavy Liquid[5]	0%[6]	0%[6]	0%[6]	0%[6]	30%[6, 8]			30%[8]	
Pumps[1]									93%
Light Liquid	75%	75%	85%	93%	93%			30%	
Heavy Liquid[5]	0%	0%[7]	0%[7]	0%[8, 10]	30%[8]			30%[8]	
Flanges/Connectors[1]	30%	30%	30%	30%				30%	97%
Gas/Vapor					97%	97%	75%		
Light Liquid					97%	97%	75%		
Heavy Liquid[8]					30%	30%	30%		
Compressors[1]	75%	75%	85%	95%	95%			30%	95%
Relief Valves[1, 2] (Gas/Vapor)	75%	97%	97%	97%	97%			30%	97%
Sampling Connection[3] (pounds per hour per sample taken)	0%	0%	0%	0%	0%			0%	0%
Open Ended Lines[1, 4]									

It should be noted in the application and added to the permit conditions if any of the footnotes are applicable. For example, if components in heavy liquid service are monitored, then the application should include the monitored concentration and the concentration of saturation, in ppmv and such monitoring will be added as a separate condition.

Endnotes Table V

1. **Control efficiencies apply only to components that are actually monitored. Control efficiencies do not apply to components that are difficult or unsafe-to-monitor on the standard schedule. However, difficult-to-monitor gas or light liquid valves under the 28RCT, 28VHP, 28MID, or 28LAER programs that are monitored once per year may apply a 75% reduction credit.**
2. **100% control may be taken if a relief valve vents to an operating control device or if it is equipped with a rupture disc and a pressure-sensing device between the valve and disc to monitor for disc integrity. For new facilities, BACT guidelines generally require that all relief valves vent to a control device. When there are safety reasons that the relief valve cannot achieve 100% control, the relief valve can be monitored under the LDAR programs for the credit listed. This monitoring must be performed regardless of whether the relief valve is considered accessible, difficult-to-monitor or unsafe-to-monitor. Relief valves that do not achieve 100% control should not be built in locations that are unsafe-to-monitor.**
3. **Sampling connection control efficiencies are covered under other equipment and services. Sampling emissions are based on the number of samples taken per year as opposed to the number of connections. Fugitives for a closed loop sampling system are based on the component count.**
4. **Good design criteria for special chemicals handling and most LDAR programs require open-ended lines to be equipped with an appropriately sized cap, blind flange, plug, or a second valve. If so equipped, open-ended lines may be given a 100% control credit. Regardless of the lines given 100% credit, these lines should be mentioned in permit applications. Exceptions to the LDAR program criteria may be made for safety reasons with the approval of TCEQ management.**

TABLE 5-2. CONTROL EFFECTIVENESS FOR AN LDAR PROGRAM AT A SOCMI PROCESS UNIT

Equipment type and service	Control effectiveness (%)		
	Monthly monitoring 10,000 ppmv leak definition	Quarterly monitoring 10,000 ppmv leak definition	HON reg neg[a]
Valves - gas	87	67	92
Valves - light liquid	84	61	88
Pumps - light liquid	69	45	75
Connectors - all	b	b	93

[a] Control effectiveness attributable to the requirements of the proposed hazardous organic NESHAP equipment leak negotiated regulation are estimated based on equipment-specific leak definitions and performance levels.

[b] Data are not available to estimate control effectiveness.

AP-42 Section 13.2

Unpaved Roads

Table 13.2.2-1. TYPICAL SILT CONTENT VALUES OF SURFACE MATERIAL ON INDUSTRIAL UNPAVED ROADS[a]

Industry	Road Use Or Surface Material	Plant Sites	No. Of Samples	Silt Content (%)	
				Range	Mean
Copper smelting	Plant road	1	3	16 - 19	17
Iron and steel production	Plant road	19	135	0.2 - 19	6.0
Sand and gravel processing	Plant road	1	3	4.1 - 6.0	4.8
	Material storage area	1	1	-	7.1
Stone quarrying and processing	Plant road	2	10	2.4 - 16	10
	Haul road to/from pit	4	20	5.0-15	8.3
Taconite mining and processing	Service road	1	8	2.4 - 7.1	4.3
	Haul road to/from pit	1	12	3.9 - 9.7	5.8
Western surface coal mining	Haul road to/from pit	3	21	2.8 - 18	8.4
	Plant road	2	2	4.9 - 5.3	5.1
	Scraper route	3	10	7.2 - 25	17
	Haul road (freshly graded)	2	5	18 - 29	24
Construction sites	Scraper routes	7	20	0.56-23	8.5
Lumber sawmills	Log yards	2	2	4.8-12	8.4
Municipal solid waste landfills	Disposal routes	4	20	2.2 - 21	6.4

[a]References 1,5-15.

The following empirical expressions may be used to estimate the quantity in pounds (lb) of size-specific particulate emissions from an unpaved road, per vehicle mile traveled (VMT):

For vehicles traveling on unpaved surfaces at industrial sites, emissions are estimated from the following equation:

$$E = k\,(s/12)^a (W/3)^b \tag{1a}$$

and, for vehicles traveling on publicly accessible roads, dominated by light duty vehicles, emissions may be estimated from the following:

$$E = \frac{k\,(s/12)^a (S/30)^d}{(M/0.5)^c} - C \tag{1b}$$

where k, a, b, c and d are empirical constants (Reference 6) given below and

E = size-specific emission factor (lb/VMT)
s = surface material silt content (%)
W = mean vehicle weight (tons)
M = surface material moisture content (%)
S = mean vehicle speed (mph)
C = emission factor for 1980's vehicle fleet exhaust, brake wear and tire wear.

The source characteristics s, W and M are referred to as correction parameters for adjusting the emission estimates to local conditions. The metric conversion from lb/VMT to grams (g) per vehicle kilometer traveled (VKT) is as follows:

1 lb/VMT = 281.9 g/VKT

The constants for Equations 1a and 1b based on the stated aerodynamic particle sizes are shown in Tables 13.2.2-2 and 13.2.2-4. The PM-2.5 particle size multipliers (k-factors) are taken from Reference 27.

Table 13.2.2-2. CONSTANTS FOR EQUATIONS 1a AND 1b

Constant	Industrial Roads (Equation 1a)			Public Roads (Equation 1b)		
	PM-2.5	PM-10	PM-30*	PM-2.5	PM-10	PM-30*
k (lb/VMT)	0.15	1.5	4.9	0.18	1.8	6.0
a	0.9	0.9	0.7	1	1	1
b	0.45	0.45	0.45	-	-	-
c	-	-	-	0.2	0.2	0.3
d	-	-	-	0.5	0.5	0.3
Quality Rating	B	B	B	B	B	B

*Assumed equivalent to total suspended particulate matter (TSP)
"-" = not used in the emission factor equation

Table 13.2.2-2 also contains the quality ratings for the various size-specific versions of Equation 1a and 1b. The equation retains the assigned quality rating, if applied within the ranges of source conditions, shown in Table 13.2.2-3, that were tested in developing the equation:

Table 13.2.2-3. RANGE OF SOURCE CONDITIONS USED IN DEVELOPING EQUATION 1a AND 1b

Emission Factor	Surface Silt Content, %	Mean Vehicle Weight		Mean Vehicle Speed		Mean No. of Wheels	Surface Moisture Content, %
		Mg	ton	km/hr	mph		
Industrial Roads (Equation 1a)	1.8-25.2	1.8-260	2-290	8-69	5-43	4-17[a]	0.03-13
Public Roads (Equation 1b)	1.8-35	1.4-2.7	1.5-3	16-88	10-55	4-4.8	0.03-13

[a] See discussion in text.

As noted earlier, the models presented as Equations 1a and 1b were developed from tests of traffic on unpaved surfaces. Unpaved roads have a hard, generally nonporous surface that usually dries quickly after a rainfall or watering, because of traffic-enhanced natural evaporation. (Factors influencing how fast a road dries are discussed in Section 13.2.2.3, below.) The quality ratings given above pertain to the mid-range of the measured source conditions for the equation. A higher mean vehicle weight and a higher than normal traffic rate may be justified when performing a worst-case analysis of emissions from unpaved roads.

The emission factors for the exhaust, brake wear and tire wear of a 1980's vehicle fleet (*C*) was obtained from EPA's MOBILE6.2 model [23]. The emission factor also varies with aerodynamic size range

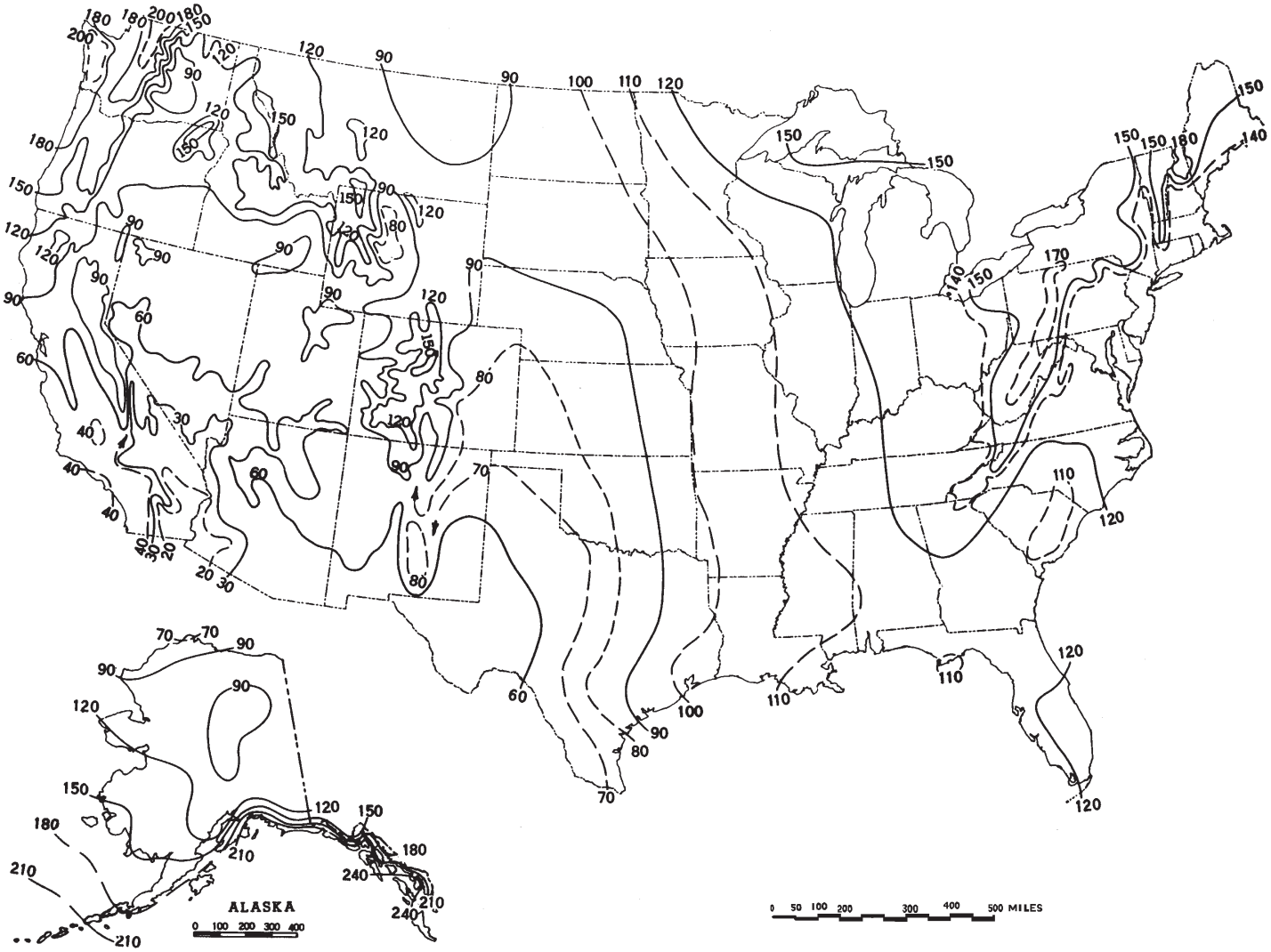

Figure 13.2.2-1. Mean number of days with 0.01 inch or more of precipitation in United States.

Section 8

Map(s)

A map such as a 7.5 minute topographic quadrangle showing the exact location of the source. The map shall also include the following:

The UTM or Longitudinal coordinate system on both axes	An indicator showing which direction is north
A minimum radius around the plant of 0.8km (0.5 miles)	Access and haul roads
Topographic features of the area	Facility property boundaries
The name of the map	The area which will be restricted to public access
A graphical scale	

A map is attached to this application.

DeLorme Topo USA® 7.0

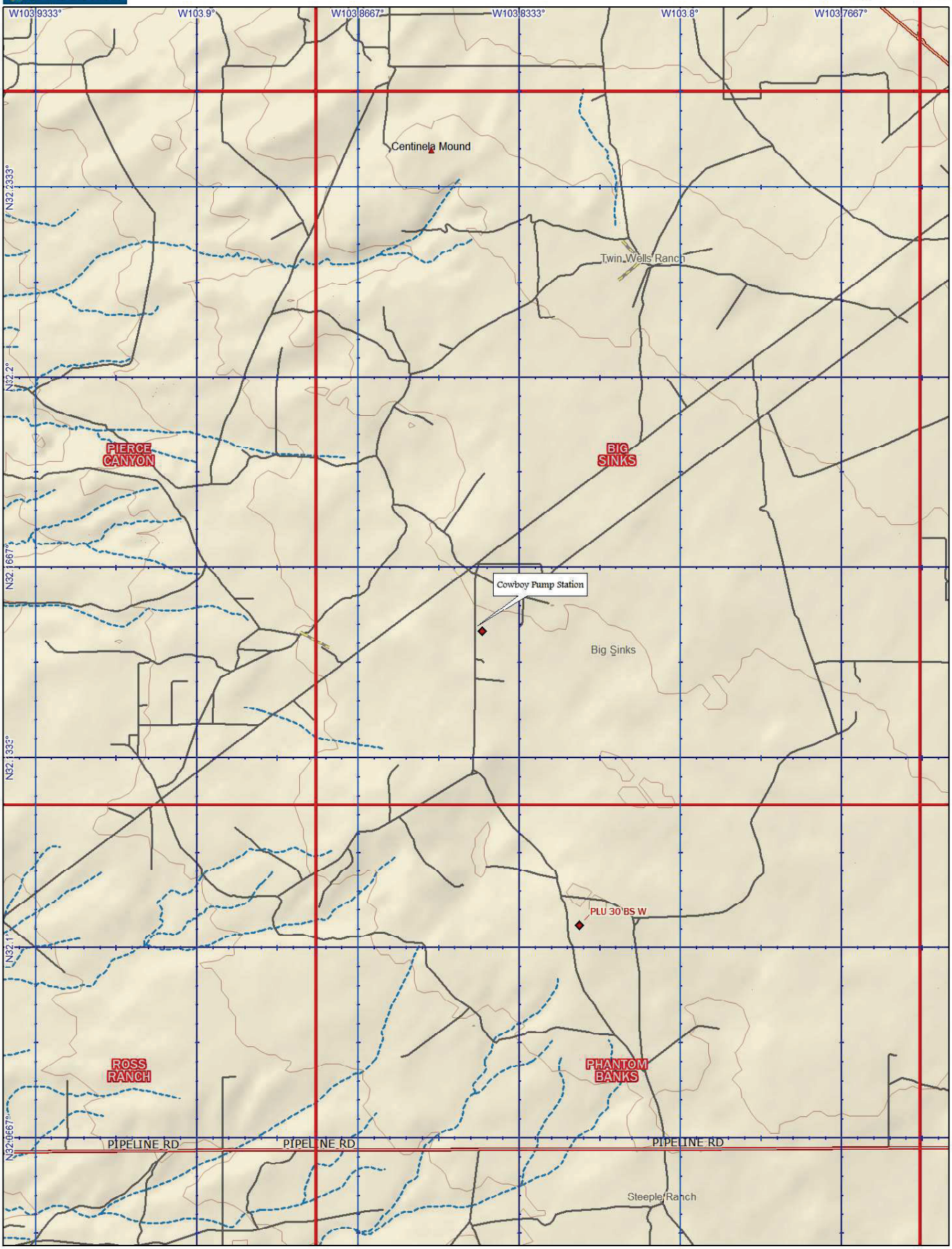

Data use subject to license.

© DeLorme. DeLorme Topo USA® 7.0.

www.delorme.com

MN (7.4° E)

0 ½ 1 1½ 2 2½ mi

Data Zoom 11-0

Cowboy CDP
Aerial Image with 0.5 Mile Boundary and Access Roads
Legend
Cowboy CDP
Cowboy CDP
Google Earth
N
1 mi

Section 9

Proof of Public Notice

(for NSR applications submitting under 20.2.72 or 20.2.74 NMAC)

(This proof is required by: 20.2.72.203.A.14 NMAC "Documentary Proof of applicant's public notice")

☑ **I have read the AQB "Guidelines for Public Notification for Air Quality Permit Applications"**
This document provides detailed instructions about public notice requirements for various permitting actions. It also provides public notice examples and certification forms. Material mistakes in the public notice will require a re-notice before issuance of the permit.

Unless otherwise allowed elsewhere in this document, the following items document proof of the applicant's Public Notification. Please include this page in your proof of public notice submittal with checkmarks indicating which documents are being submitted with the application.

New Permit and **Significant Permit Revision** public notices must include all items in this list.

Technical Revision public notices require only items 1, 5, 9, and 10.

Per the Guidelines for Public Notification document mentioned above, include:

1. ☑ A copy of the certified letter receipts with post marks (20.2.72.203.B NMAC)
2. ☑ A list of the places where the public notice has been posted in at least four publicly accessible and conspicuous places, including the proposed or existing facility entrance. (e.g: post office, library, grocery, etc.)
3. ☑ A copy of the property tax record (20.2.72.203.B NMAC).
4. ☑ A sample of the letters sent to the owners of record.
5. ☑ A sample of the letters sent to counties, municipalities, and Indian tribes.
6. ☑ A sample of the public notice posted and a verification of the local postings.
7. ☑ A table of the noticed citizens, counties, municipalities and tribes and to whom the notices were sent in each group.
8. ☑ A copy of the public service announcement (PSA) sent to a local radio station and documentary proof of submittal.
9. ☑ A copy of the classified or legal ad including the page header (date and newspaper title) or its affidavit of publication stating the ad date, and a copy of the ad. When appropriate, this ad shall be printed in both English and Spanish.
10. ☑ A copy of the display ad including the page header (date and newspaper title) or its affidavit of publication stating the ad date, and a copy of the ad. When appropriate, this ad shall be printed in both English and Spanish.
11. ☑ A map with a graphic scale showing the facility boundary and the surrounding area in which owners of record were notified by mail. This is necessary for verification that the correct facility boundary was used in determining distance for notifying land owners of record.

All public notice requirements have been completed and are included in this section.

CONFIRMATION

TRINITY CONSULTANTS
9400 HOLLY AVE NE
ALBUQUERQUE NM 87122--296

PO#:

Account	AD#	Ordered By	Tax Amount	Total Amount	Payment Method	Payment Amount	Amount Due
1425934	0005852571	Mingcheng Ren	$20.75	$301.35	Credit Card	$0.00	$301.35

Ad Order Notes:

Sales Rep: HSmith **Order Taker:** HSmith **Order Created** 10/27/2023

Product	Placement	Class	# Ins	Start Date	End Date
ELP-CA Current-Argus	ELP-Legals	Legal Notices	**1**	**11/03/2023**	**11/03/2023**
ELP-currentargus.com	ELPW-Legals	Legal Notices	**1**	**11/03/2023**	**11/03/2023**

Text of Ad: 10/27/2023

NOTICE OF AIR QUALITY PERMIT APPLICATION

XTO Energy, Inc. announces its application submittal to the New Mexico Environment Department for an air quality permit for the **modification** of its **Cowboy CDP** facility. The expected date of application submittal to the Air Quality Bureau is **November 3, 2023.**

The exact location for the proposed facility known as, **Cowboy CDP**, is at **latitude 32.15992 dec deg** and **longitude -103.84160 dec deg.** The approximate location of this facility is **14.0** miles **SE** of **Malaga** in **Eddy** County, NM.

The proposed **modification** consists of an addition of six (6) oil tanks, updating fugitive component counts, and updating the flare emissions.
The estimated maximum quantities of any regulated air contaminant will be as follows in pound per hour (pph) and tons per year (tpy) and could change slightly during the course of the Department's review:

Pollutant:	Pounds per hour	Tons per year
Particulate Matter (PM)	81	40
PM 10	79	40
PM 2.5	79	40
Sulfur Dioxide (SO2)	7	28
Nitrogen Oxides (NOx)	575	190
Carbon Monoxide (CO)	1120	159
Volatile Organic Compounds (VOC)	1751	205
Total sum of all Hazardous Air Pollutants (HAPs)	30	11
Green House Gas Emissions as Total CO2e	n/a	1,012,749

The standard and maximum operating schedules of the facility will be 24 hours per day, 7 days a week and a maximum of 52 weeks per year.

The owner and/or operator of the Facility is:
XTO Energy, Inc.
22777 Springwoods Village Pkwy
Spring Texas 77389

If you have any comments about the construction or operation of this facility, and you want your comments to be made as part of the permit review process, you must submit your comments in writing to this address: Permit Programs Manager; New Mexico Environment Department; Air Quality Bureau; 525 Camino de los Marquez, Suite 1; Santa Fe, New Mexico; 87505-1816. Other comments and questions may be submitted verbally. (505) 476-4300; 1 800 224-7009.

Please refer to the company name and site name, or send a copy of this notice along with your comments, since the Department may have not yet received the permit application. Please include a legible return mailing address with your comments. Once the Department has performed a preliminary review of the application and its air quality impacts, the Department's notice will be published in the legal section of a newspaper circulated near the facility location.

General information about air quality and the permitting process, and links to the regulations can be found at the Air Quality Bureau's website: www.env.nm.gov/air-quality/permitting-section-home-page/.
The regulation dealing with public participation in the permit review process is 20.2.72.206 NMAC.

Attención
Este es un aviso de la oficina de Calidad del Aire del Departamento del Medio Ambiente de Nuevo México, acerca de las emisiones producidas por un establecimiento en esta área. Si usted desea información en español, por favor comuníquese con esa oficina al teléfono 505-629-3395.

Notice of Non-Discrimination
NMED does not discriminate on the basis of race, color, national origin, disability, age or sex in the administration of its programs or activities, as required by applicable laws and regulations. NMED is responsible for coordination of compliance efforts and receipt of inquiries concerning non-discrimination requirements implemented by 40 C.F.R. Part 7, including Title VI of the Civil Rights Act of 1964, as amended; Section 504 of the Rehabilitation Act of 1973; the Age Discrimination Act of 1975, Title IX of the Education Amendments of 1972, and Section 13 of the Federal Water Pollution Control Act Amendments of 1972. If you have any questions about this notice or any of NMED's non-discrimination programs, policies or procedures, or if you believe that you have been discriminated against with respect to a NMED program or activity, you may contact: Non-Discrimination Coordinator, NMED, 1190 St. Francis Dr., Suite N4050, P.O. Box 5469, Santa Fe, NM 87502, (505) 827-2855, nd.coordinator@env.nm.gov. You may also visit our website at https://www.env.nm.gov/non-employee-discrimination-complaint-page/ to learn how and where to file a complaint of discrimination.
#5852571, Current Argus, November 3, 2023

NOTICE OF AIR QUALITY PERMIT APPLICATION

XTO Energy, Inc. announces its application submittal to the New Mexico Environment Department for an air quality permit for the **modification** of its **Cowboy CDP** facility. The expected date of application submittal to the Air Quality Bureau is **November 3, 2023.**

The exact location for the proposed facility known as, **Cowboy CDP**, is at **latitude 32.15992 dec deg** and **longitude -103.84160 dec deg.** The approximate location of this facility is **14.0** miles **SE** of **Malaga** in **Eddy** County, NM.

The proposed **modification** consists of an addition of six (6) oil tanks, updating fugitive component counts, and updating the flare emissions.

The estimated maximum quantities of any regulated air contaminant will be as follows in pound per hour (pph) and tons per year (tpy) and could change slightly during the course of the Department's review:

Pollutant:	Pounds per hour	Tons per year
Particulate Matter (PM)	81	40
PM_{10}	79	40
$PM_{2.5}$	79	40
Sulfur Dioxide (SO_2)	7	28
Nitrogen Oxides (NO_x)	575	190
Carbon Monoxide (CO)	1120	159
Volatile Organic Compounds (VOC)	1751	205
Total sum of all Hazardous Air Pollutants (HAPs)	30	11
Green House Gas Emissions as Total CO_2e	n/a	1,012,749

The standard and maximum operating schedules of the facility will be 24 hours per day, 7 days a week and a maximum of 52 weeks per year.

The owner and/or operator of the Facility is:

XTO Energy, Inc.
22777 Springwoods Village Pkwy
Spring Texas 77389

If you have any comments about the construction or operation of this facility, and you want your comments to be made as part of the permit review process, you must submit your comments in writing to this address: Permit Programs Manager; New Mexico Environment Department; Air Quality Bureau; 525 Camino de los Marquez, Suite 1; Santa Fe, New Mexico; 87505-1816. Other comments and questions may be submitted verbally. (505) 476-4300; 1 800 224-7009.

Please refer to the company name and site name, or send a copy of this notice along with your comments, since the Department may have not yet received the permit application. Please include a legible return mailing address with your comments. Once the Department has performed a preliminary review of the application and its air quality impacts, the Department's notice will be published in the legal section of a newspaper circulated near the facility location.

General information about air quality and the permitting process, and links to the regulations can be found at the Air Quality Bureau's website: www.env.nm.gov/air-quality/permitting-section-home-page/. The regulation dealing with public participation in the permit review process is 20.2.72.206 NMAC.

Attención
Este es un aviso de la oficina de Calidad del Aire del Departamento del Medio Ambiente de Nuevo México, acerca de las emisiones producidas por un establecimiento en esta área. Si usted desea información en español, por favor comuníquese con esa oficina al teléfono 505-629-3395.

Notice of Non-Discrimination
NMED does not discriminate on the basis of race, color, national origin, disability, age or sex in the administration of its programs or activities, as required by applicable laws and regulations. NMED is responsible for coordination of compliance efforts and receipt of inquiries concerning non-discrimination requirements implemented by 40 C.F.R. Part 7, including Title VI of the Civil Rights Act of 1964, as amended; Section 504 of the Rehabilitation Act of 1973; the Age Discrimination Act of 1975, Title IX of the Education Amendments of 1972, and Section 13 of the Federal Water Pollution Control Act Amendments of 1972. If you have any questions about this notice or any of NMED's non-discrimination programs, policies or procedures, or if you believe that you have been discriminated against with respect to a NMED program or activity, you may contact: Non-Discrimination Coordinator, NMED, 1190 St. Francis Dr., Suite N4050, P.O. Box 5469, Santa Fe, NM 87502, (505) 827-2855, nd.coordinator@env.nm.gov. You may also visit our website at https://www.env.nm.gov/non-employee-discrimination-complaint-page/ to learn how and where to file a complaint of discrimination.

TX-GCI1118177-01

Final Publication Date

11/3/2023

Ad Number

GCI1118177

Publication

Carlsbad Current Argus

Special Requests

Attn: Mingcheng Ren - needs affidavit and e-tear sheet as soon after publication as possible. Also needs a physical affidavit and tear sheet mailed

Market

El Paso

Delivery Method

Both

Number of Affidavits Needed

1

Customer Email

Mingcheng.Ren@trinityconsultants.com

Customer Name

Trinity Consultants

Customer Phone Number

(972) 661-8100

Customer Address

9400 Holly Ave NE Building 38
Albuquerque, NM 87122

Account Number (If Known)

172854

Name

Trinity Consultants

Street

9400 Holly Ave NE, Bldg 3, Suite B

City

Albuquerque

State

NM

ZIP Code

87122

Your Name

Rose Urbach

Email Address

rurbach@localiq.com

CARLSBAD
CURRENT-ARGUS

AFFIDAVIT OF PUBLICATION

Ad No.
GCI1118177

TRINITY CONSULTANTS
9400 HOLLY AVE NE BLDG 38
ALBUQUERQUE, NM 87122
ATTN MINCHEN REN

I, a legal clerk of the Carlsbad Current-Argus, a newspaper published daily at the City of Carlsbad, in said county of Eddy, state of New Mexico and of general paid circulation in said county; that the same is a duly qualified newspaper under the laws of the State wherein legal notices and advertisements may be published; that the printed notice attached hereto was published in the regular and entire edition of said newspaper and not in supplement thereof on the date as follows, to wit:

11/3/2023

Legal Clerk

Subscribed and sworn before me this
3rd of November, 2023

State of WI, County of Brown
NOTARY PUBLIC

5·15·27
My Commission Expires

NANCY HEYRMAN
Notary Public
State of Wisconsin

Amount: $260.60
Ad#: GCI1118177
P O : PUBLIC NOTICE
# of Affidavits :1

NOTICE OF AIR QUALITY PERMIT APPLICATION

XTO Energy, Inc. announces its application submittal to the New Mexico Environment Department for an air quality permit for the **modification** of its **Cowboy CDP** facility. The expected date of application submittal to the Air Quality Bureau is **November 3, 2023.**

The exact location for the proposed facility known as, **Cowboy CDP**, is at **latitude 32.15992 dec deg** and **longitude -103.84160 dec deg.** The approximate location of this facility is **14.0** miles **SE** of **Malaga** in **Eddy** County, NM.

The proposed **modification** consists of an addition of six (6) oil tanks, updating fugitive component counts, and updating the flare emissions.

The estimated maximum quantities of any regulated air contaminant will be as follows in pound per hour (pph) and tons per year (tpy) and could change slightly during the course of the Department's review:

Pollutant:	Pounds per hour	Tons per year
Particulate Matter (PM)	81	40
PM_{10}	79	40
$PM_{2.5}$	79	40
Sulfur Dioxide (SO_2)	7	28
Nitrogen Oxides (NO_x)	575	190
Carbon Monoxide (CO)	1120	159
Volatile Organic Compounds (VOC)	1751	205
Total sum of all Hazardous Air Pollutants (HAPs)	30	11
Green House Gas Emissions as Total CO_2e	n/a	1,012,749

The standard and maximum operating schedules of the facility will be 24 hours per day, 7 days a week and a maximum of 52 weeks per year.

The owner and/or operator of the Facility is:

XTO Energy, Inc.
22777 Springwoods Village Pkwy
Spring Texas 77389

If you have any comments about the construction or operation of this facility, and you want your comments to be made as part of the permit review process, you must submit your comments in writing to this address: Permit Programs Manager; New Mexico Environment Department; Air Quality Bureau; 525 Camino de los Marquez, Suite 1; Santa Fe, New Mexico; 87505-1816. Other comments and questions may be submitted verbally. (505) 476-4300; 1 800 224-7009.

Please refer to the company name and site name, or send a copy of this notice along with your comments, since the Department may have not yet received the permit application. Please include a legible return mailing address with your comments. Once the Department has performed a preliminary review of the application and its air quality impacts, the Department's notice will be published in the legal section of a newspaper circulated near the facility location.

General information about air quality and the permitting process, and links to the regulations can be found at the Air Quality Bureau's website: www.env.nm.gov/air-quality/permitting-section-home-page/. The regulation dealing with public participation in the permit review process is 20.2.72.206 NMAC.

Attención

Este es un aviso de la oficina de Calidad del Aire del Departamento del Medio Ambiente de Nuevo México, acerca de las emisiones producidas por un establecimiento en esta área. Si usted desea información en español, por favor comuníquese con esa oficina al teléfono 505-629-3395.

Notice of Non-Discrimination

NMED does not discriminate on the basis of race, color, national origin, disability, age or sex in the administration of its programs or activities, as required by applicable laws and regulations. NMED is responsible for coordination of compliance efforts and receipt of inquiries concerning non-discrimination requirements implemented by 40 C.F.R. Part 7, including Title VI of the Civil Rights Act of 1964, as amended; Section 504 of the Rehabilitation Act of 1973; the Age Discrimination Act of 1975, Title IX of the Education Amendments of 1972, and Section 13 of the Federal Water Pollution Control Act Amendments of 1972. If you have any questions about this notice or any of NMED's non-discrimination programs, policies or procedures, or if you believe that you have been discriminated against with respect to a NMED program or activity, you may contact: Non-Discrimination Coordinator, NMED, 1190 St. Francis Dr., Suite N4050, P.O. Box 5469, Santa Fe, NM 87502, (505) 827-2855, nd.coordinator@env.nm.gov. You may also visit our website at https://www.env.nm.gov/non-employee-discrimination-complaint-page/ to learn how and where to file a complaint of discrimination.

TX-GCI1118177-01

Classifieds

To Advertise, visit our website: **classifieds.currentargus.com**
- Public Notices/Legals email: **legals@currentargus.com**
- Business & Services email: **servicedirectory@currentargus.com**
- To post job openings, visit: **currentargus.com/jobs**

TO ADVERTISE
Visit Our Website:
classifieds.currentargus.com

All classified ads are subject to the applicable rate card, copies of which are available from our Advertising Dept. All ads are subject to approval before publication. Carlsbad Current-Argus reserves the right to edit, refuse, reject, classify or cancel any ad at any time. Errors must be reported in the first day of publication. Carlsbad Current-Argus shall not be liable for any loss or expense that results from an error in or omission of an advertisement. No refunds for early cancellation of order.

Assorted Stuff

all kinds of things...

Wanted to Buy

KANE RESOURCES
Buying Mineral Rights.
WE BUY MINERALS: We are interested in buying minerals in Eddy and Lea County, New Mexico. We pay referrals for any lease or minerals.
Please email alex@kaneresources.com or call (432) 203-5510

Jobcase
FIND THE BEST TALENT TODAY!

LocaliQ | USA TODAY NETWORK
Get started at jobs.usatoday.com

General

General

SENMC
Southeast New Mexico College
SOUTHEAST NEW MEXICO COLLEGE
(Formerly NMSU Carlsbad)
1500 University Dr. Carlsbad NM 88220

Southeast New Mexico College
is looking to hire a
Human Resources Coordinator

A Bachelor degree in a related field with three (3) years of professional experience directly related to the standard duties as outlined is required. However, an equivalency of Associate degree in a related field with five (5) years of professional experience directly related to the standard duties as outlined OR no degree with seven (7) years of professional experience directly related to the standard duties as outlined will be accepted. Any equivalent combination of education, training and/or experience as approved by Human Resources Department. **Salary Range: $50,439.41 - $56,744.59 DOE.** For a detailed job description and more information about our campus go to https://senmc.edu/. To apply, **please submit an application, cover letter, resume, and unofficial transcripts by email** to Steven at hr@senmc.edu. For additional information, please call Steven Gonzales at 575-234-9208, or email hr@senmc.edu. **Posting Dates: Open until filled.** SENMC is an equal opportunity and affirmative action employer.

Your Source
Public Notices
for the latest...

Your Source
Public Notices
for the latest...

Legal Notices

Legal Notices

STATE OF NEW MEXICO COUNTY OF EDDY FIFTH JUDICIAL DISTRICT COURT SIWELL INC. DBA CAPITAL MORTGAGE SERVICES OF TEXAS, Plaintiff, v. JUSTIN LEVARIO; AMANDA LEVARIO; AND UNKNOWN OCCUPANTS OF THE PROPERTY, Defendant(s). Case No. D-503-CV-2023-00026 AMENDED NOTICE OF SALE NOTICE IS HEREBY GIVEN that on December 14, 2023, at 12:30 p.m. the undersigned Special Master will, at the main entrance of the Eddy County Courthouse, 102 N Canal St Carlsbad, New Mexico 88220, sell all the right, title and interest of the above-named Defendants in and to the hereinafter described real estate to the highest bidder for cash. The property to be sold is located at 911 South 4th Street, Artesia, New Mexico 88210, Eddy County, New Mexico, and is particularly described as follows: LOT 6 IN BLOCK 3 OF THE G.R. BRAINARD REDIVISION OF LOTS 10, 11 AND 12 OF BLOCK 3 ROSELAWN SUBDIVISION, TO THE CITY OF ARTESIA, EDDY COUNTY, NEW MEXICO, AS THE SAME APPEARS ON THE OFFICIAL, FILED PLAT THEREOF ON FILE IN THE OFFICE OF THE COUNTY CLERK OF EDDY COUNTY, NEW MEXICO. EXCEPTING HEREFROM ALL OIL, GAS AND OTHER MINERALS. (the "Property") as the same is shown and designated on the plat thereof, filed in the office of the County Clerk of Eddy County, New Mexico including any improvements, fixtures, and attachments, such as, but not limited to, mobile homes. If there is a conflict between the legal description and the street address, the legal description shall control. THE FOREGOING SALE will be made to satisfy a judgment rendered by the above Court in the above entitled and numbered cause on August 17, 2023, being an action to foreclose a Deed of Trust on the above described property. Plaintiff's Judgment, which includes interest and costs, is $158,496.16 and the same bears interest at 4.750% per annum through the date of sale. The Plaintiff and/or its assignee has the right to bid at such sale and submit its bid verbally or in writing. The Plaintiff may apply all or any part of its judgment to the purchase price in lieu of cash. NOTICE IS FURTHER GIVEN that the undersigned Special Master will, as set forth above, offer for sale and sell the Property to the highest bidder for cash or equivalent, for the purpose of satisfying, in the adjudged order of priorities, the judgment and decree of foreclosure described herein, together with any additional costs and attorney's fees, including the costs of advertisement and publication for the foregoing sale and reasonable receiver and Special Master's fees in an amount to be fixed by the Court. NOTICE IS FURTHER GIVEN that the real property and improvements concerned with herein will be sold subject to any and all patent reservations, easements, all recorded and unrecorded liens and interests not foreclosed herein, and all recorded and unrecorded special assessments, taxes and utility liens that may be due. Plaintiff, its attorneys, and the Special Master disclaim all responsibility for, and the purchaser at the sale takes the property "as is," in its present condition subject to the valuation of the property by the County Assessor as real or personal property, affixture of any mobile or manufactured home to the land, deactivation of, or title status to, a mobile or manufactured home on the property, if any, environmental contamination on the property, if any, substandard conditions or code violations, if any, and zoning violations concerning the property, if any. NOTICE IS FURTHER GIVEN that the foregoing sale may be postponed and rescheduled at the discretion of the Special Master, and is subject to all taxes, utility liens and other restrictions and easements of record. NOTICE IS FURTHER GIVEN that the purchaser at such sale shall take title to the above described real property subject to a one (1) month right of redemption held by Defendant Borrowers or their assignee upon entry of an order approving sale, and subject to the entry of an order of the Court approving the terms and conditions of sale. Witness my hand this 3rd day of October 2023. By. /S/ Robert Doyle Robert Doyle Special Master Legal Process Network PO Box 51526 Albuquerque, NM 87181 505-417-4113
#0005838454, Current Argus, Oct. 13, 20, 27, Nov. 3, 2023

Legal Notices

STATE OF NEW MEXICO
COUNTY OF EDDY
FIFTH JUDICIAL DISTRICT

NO. D-503-CV-2022-00891

IDAHO HOUSING AND FINANCE ASSOCIATION,
Plaintiff,
v.

SARAH REGION, NEW MEXICO MORTGAGE FINANCE AUTHORITY
Defendants.

NOTICE OF SALE

NOTICE IS HEREBY GIVEN that the undersigned Special Master will on December 5, 2023 at 11:30 a.m., outside the front entrance of the Eddy County Courthouse, 102 North Canal, Carlsbad, NM, sell and convey to the highest bidder for cash all the right, title, and interest of the above-named defendants in and to the following described real estate located in said County and State:
Lot 10, Block 218, Tracy Addition, to the City of Carlsbad Eddy County, New Mexico, as shown on the Official Plat thereof on file in the Office of the County Clerk of Eddy County, New Mexico.

the street address of the real property is 1032 N Main Street, Carlsbad, NM 88220. Plaintiff does not represent or warrant that the stated street address is the street address of the described property; if the street address does not match the legal description, then the property being sold herein is the property more particularly described above, not the property located at the street address; any prospective purchaser at the sale is given notice that it should verify the location and address of the property being sold. Said sale will be made pursuant to the Summary and Stipulated Judgment, Decree of Foreclosure, and Appointment of Special Master entered on October 11, 2023 in the above entitled and numbered cause, which was a suit to foreclose a mortgage held by the above Plaintiff and wherein Plaintiff was adjudged to have a lien against the above-described real estate in the sum of $141,310.22, plus interest from June 2, 2023 to the date of sale at the rate of 3.750% per annum, the costs of sale, including the Special Master's fee, publication costs, and Plaintiff's costs expended for taxes, insurance, and keeping the property in good repair. Plaintiff has the right to bid at such sale and submit its bid verbally or in writing. The Plaintiff may apply all or any part of its judgment to the purchase price in lieu of cash.
At the date and time stated above, the Special Master may postpone the sale to such later date and time as the Special Master may specify.
NOTICE IS FURTHER GIVEN that this sale may be subject to a bankruptcy filing, a payoff, a reinstatement or any other condition that would cause the cancellation of this sale. Further, if any of these conditions exist, at the time of sale, this sale will be null and void, the successful bidder's funds shall be returned, and the Special Master and the mortgagee giving this notice shall not be liable to the successful bidder for any damages.
NOTICE IS FURTHER GIVEN that the real property and improvements concerned with herein will be sold subject to any and all patent reservations, easements, all recorded and unrecorded liens not foreclosed herein, and all recorded and unrecorded special assessments and taxes that may be due. Plaintiff and its attorneys disclaim all responsibility for, and the purchaser at the sale takes the property subject to, the valuation of the property by the County Assessor as real or personal property, affixture of any mobile or manufactured home to the land, deactivation of title to a mobile or manufactured home on the property, if any, environmental contamination on the property, if any, and zoning violations concerning the property, if any.
NOTICE IS FURTHER GIVEN that the purchaser at such sale shall take title to the above-described real property subject to rights of redemption.
Dated: October 20, 2023.

/s/ Margaret Lake
Margaret Lake
Special Master
Pro Legal Services, LLC
201 Eubank Blvd. NE, Suite A1
Albuquerque, NM 87123
(505)715-3711
#5850606, Current Argus, Oct. 27, Nov. 3, 10, 17, 2023

Legal Notices

Legal Notices

Legal Notices

NOTICE OF AIR QUALITY PERMIT APPLICATION

XTO Energy, Inc. announces its application submittal to the New Mexico Environment Department for an air quality permit for the **modification** of its **Cowboy CDP** facility. The expected date of application submittal to the Air Quality Bureau is **November 3, 2023.**

The exact location for the proposed facility known as, **Cowboy CDP**, is at **latitude 32.15992 dec deg and longitude -103.84160 dec deg.** The approximate location of this facility is **14.0 miles SE of Malaga** in Eddy County, NM.

The proposed **modification** consists of an addition of six (6) oil tanks, updating fugitive component counts, and updating the flare emissions.
The estimated maximum quantities of any regulated air contaminant will be as follows in pound per hour (pph) and tons per year (tpy) and could change slightly during the course of the Department's review:

Pollutant	Pounds per hour	Tons per year
Particulate Matter (PM)	81	40
PM 10	79	40
PM 2.5	79	40
Sulfur Dioxide (SO2)	7	28
Nitrogen Oxides (NOx)	575	190
Carbon Monoxide (CO)	1120	159
Volatile Organic Compounds (VOC)	1751	205
Total sum of all Hazardous Air Pollutants (HAPs)	30	11
Green House Gas Emissions as Total CO2e	n/a	1,012,749

The standard and maximum operating schedules of the facility will be 24 hours per day, 7 days a week and a maximum of 52 weeks per year.

The owner and/or operator of the Facility is:
XTO Energy, Inc.
22777 Springwoods Village Pkwy
Spring Texas 77389

If you have any comments about the construction or operation of this facility, and you want your comments to be made as part of the permit review process, you must submit your comments in writing to this address: Permit Programs Manager; New Mexico Environment Department; Air Quality Bureau; 525 Camino de los Marquez, Suite 1; Santa Fe, New Mexico; 87505-1816. Other comments and questions may be submitted verbally. (505) 476-4300; 1 800 224-7009.

Please refer to the company name and site name, or send a copy of this notice along with your comments, since the Department may have not yet received the permit application. Please include a legible return mailing address with your comments. Once the Department has performed a preliminary review of the application and its air quality impacts, the Department's notice will be published in the legal section of a newspaper circulated near the facility location.

General information about air quality and the permitting process, and links to the regulations can be found at the Air Quality Bureau's website: www.env.nm.gov/air-quality/permitting-section-home-page/. The regulation dealing with public participation in the permit review process is 20.2.72.206 NMAC.

Attencion
Este es un aviso de la oficina de Calidad del Aire del Departamento del Medio Ambiente de Nuevo México, acerca de las emisiones producidas por un establecimiento en esta área. Si usted desea información en español, por favor comuníquese con esa oficina al teléfono 505-629-3395.

Notice of Non-Discrimination
NMED does not discriminate on the basis of race, color, national origin, disability, age or sex in the administration of its programs or activities, as required by applicable laws and regulations. NMED is responsible for coordination of compliance efforts and receipt of inquiries concerning non-discrimination requirements implemented by 40 C.F.R. Part 7, including Title VI of the Civil Rights Act of 1964, as amended; Section 504 of the Rehabilitation Act of 1973; the Age Discrimination Act of 1975, Title IX of the Education Amendments of 1972, and Section 13 of the Federal Water Pollution Control Act Amendments of 1972. If you have any questions about this notice or any of NMED's non-discrimination programs, policies or procedures, or if you believe that you have been discriminated against with respect to a NMED program or activity, you may contact: Non-Discrimination Coordinator, NMED, 1190 St. Francis Dr., Suite N4050, P.O. Box 5469, Santa Fe, NM 87502, (505) 827-2855, nd.coordinator@env.nm.gov. You may also visit our website at https://www.env.nm.gov/non-employee-discrimination-complaint-page/ to learn how and where to file a complaint of discrimination.
#5852571, Current Argus, November 3, 2023

Legal Notices

STATE OF NEW MEXICO
COUNTY OF EDDY
FIFTH JUDICIAL DISTRICT COURT

TOWD POINT MASTER FUNDING TRUST 2021-PM1,
Plaintiff,
v.

CAS TABOR AS PERSONAL REPRESENTATIVE OF THE ESTATE OF BEVERLY S. YOUNG; KENNETH W. YOUNG, JR.; RAY DOYCE GUNNELLS; THE UNKNOWN HEIRS, DEVISEES OR LEGATEES OF SHELI KAY GUNNELLS
KELLY, DECEASED; AND UNKNOWN OCCUPANTS OF THE PROPERTY,
Defendants.

Case No. D-503-CV-2022-00344

NOTICE OF SUIT

STATE OF NEW MEXICO to the above-named Defendant THE UNKNOWN HEIRS, DEVISEES OR LEGATEES OF SHELI KAY GUNNELLS KELLY, DECEASED;
GREETINGS:
You are hereby notified that the above-named Plaintiff has filed a civil action against you
in the above-entitled Court and cause, the general object thereof being to foreclose a Mortgage on property located at 4809 Adobe St, Carlsbad, Eddy County, New Mexico, more particularly described as:
LOT 15, BLOCK 6 HAGERMAN ACRES UNIT NO 1, TO THE CITY OF CARLSBAD, EDDY COUNTY, NEW MEXICO, AS SHOWN ON THE OFFICIAL PLAT THEREOF ON FILE IN THE OFFICE OF THE COUNTY CLERK OF EDDY COUNTY, NEW MEXICO. EXCEPTING HEREFROM: ALL OIL, GAS AND OTHER MINERALS.

Unless you serve a pleading or motion in response to the complaint in said cause on or before 30 days after the last publication date, default judgment will be entered against you.

Respectfully Submitted,
ALDRIDGE PITE, LLP

By: /s/ Toby Lutenegger
Toby Lutenegger
Attorney for Plaintiff
4801 Lang Ave NE #110
Albuquerque NM 87109
858-750-7600
#5850248, Current Argus, Oct 27, Nov 3, 10, 2023

Legal Notices

Legal Notices

NOTICE OF AIR QUALITY PERMIT APPLICATION

XTO Energy, Inc. announces its application submittal to the New Mexico Environment Department for an air quality permit for the **modification** of its **Cowboy CDP** facility. The expected date of application submittal to the Air Quality Bureau is **November 3, 2023.**

The exact location for the proposed facility known as, **Cowboy CDP**, is at **latitude 32.15992 dec deg and longitude -103.84160 dec deg.** The approximate location of this facility is **14.0 miles SE of Malaga** in Eddy County, NM.

The proposed **modification** consists of an addition of six (6) oil tanks, updating fugitive component counts, and updating the flare emissions.

The estimated maximum quantities of any regulated air contaminant will be as follows in pound per hour (pph) and tons per year (tpy) and could change slightly during the course of the Department's review:

Pollutant	Pounds per hour	Tons per year
Particulate Matter (PM)	81	40
PM_{10}	79	40
$PM_{2.5}$	79	40
Sulfur Dioxide (SO_2)	7	28
Nitrogen Oxides (NO_x)	575	190
Carbon Monoxide (CO)	1120	159
Volatile Organic Compounds (VOC)	1751	205
Total sum of all Hazardous Air Pollutants (HAPs)	30	11
Green House Gas Emissions as Total CO_2e	n/a	1,012,749

The standard and maximum operating schedules of the facility will be 24 hours per day, 7 days a week and a maximum of 52 weeks per year.

The owner and/or operator of the Facility is:

XTO Energy, Inc.
22777 Springwoods Village Pkwy
Spring Texas 77389

If you have any comments about the construction or operation of this facility, and you want your comments to be made as part of the permit review process, you must submit your comments in writing to this address: Permit Programs Manager; New Mexico Environment Department; Air Quality Bureau; 525 Camino de los Marquez, Suite 1; Santa Fe, New Mexico; 87505-1816. Other comments and questions may be submitted verbally. (505) 476-4300; 1 800 224-7009.

Please refer to the company name and site name, or send a copy of this notice along with your comments, since the Department may have not yet received the permit application. Please include a legible return mailing address with your comments. Once the Department has performed a preliminary review of the application and its air quality impacts, the Department's notice will be published in the legal section of a newspaper circulated near the facility location.

General information about air quality and the permitting process, and links to the regulations can be found at the Air Quality Bureau's website: www.env.nm.gov/air-quality/permitting-section-home-page/. The regulation dealing with public participation in the permit review process is 20.2.72.206 NMAC.

Attención
Este es un aviso de la oficina de Calidad del Aire del Departamento del Medio Ambiente de Nuevo México, acerca de las emisiones producidas por un establecimiento en esta área. Si usted desea información en español, por favor comuníquese con esa oficina al teléfono 505-629-3395.

Notice of Non-Discrimination
NMED does not discriminate on the basis of race, color, national origin, disability, age or sex in the administration of its programs or activities, as required by applicable laws and regulations. NMED is responsible for coordination of compliance efforts and receipt of inquiries concerning non-discrimination requirements implemented by 40 C.F.R. Part 7, including Title VI of the Civil Rights Act of 1964, as amended; Section 504 of the Rehabilitation Act of 1973; the Age Discrimination Act of 1975, Title IX of the Education Amendments of 1972, and Section 13 of the Federal Water Pollution Control Act Amendments of 1972. If you have any questions about this notice or any of NMED's non-discrimination programs, policies or procedures, or if you believe that you have been discriminated against with respect to a NMED program or activity, you may contact: Non-Discrimination Coordinator, NMED, 1190 St. Francis Dr., Suite N4050, P.O. Box 5469, Santa Fe, NM 87502, (505) 827-2855, nd.coordinator@env.nm.gov. You may also visit our website at https://www.env.nm.gov/non-employee-discrimination-complaint-page/ to learn how and where to file a complaint of discrimination.

CLASSIFIEDS
Find Cars, Jobs, Apartments & more!
Search for classifieds in your area.

Check out the classified ads everyday.

FIND A JOB
LIST A HOME
BUY A CAR
ADOPT A PET
BUY A BOAT
FIND A RENTAL

Classifieds

To Advertise, visit our website: **classifieds.currentargus.com**
Public Notices/Legals email: **legals@currentargus.com**
Business & Services email: **servicedirectory@currentargus.com**
To post job openings, visit: **currentargus.com/jobs**

TO ADVERTISE
Visit Our Website:
classifieds.currentargus.com

All classified ads are subject to the applicable rate card, copies of which are available from our Advertising Dept. All ads are subject to approval before publication. Carlsbad Current-Argus reserves the right to edit, refuse, reject, classify or cancel any ad at any time. Errors must be reported in the first day of publication. Carlsbad Current-Argus shall not be liable for any loss or expense that results from an error in or omission of an advertisement. No refunds for early cancellation of order.

Assorted Stuff
all kinds of things...

Wanted to Buy

KANE RESOURCES
Buying Mineral Rights.
WE BUY MINERALS: We are interested in buying minerals in Eddy and Lea County, New Mexico. We pay referrals for any lease or minerals. Please email alex@kaneresources.com or call (432) 203-5510

General

General

SOUTHEAST NEW MEXICO COLLEGE
(Formerly NMSU Carlsbad)
1500 University Dr. Carlsbad NM 88220

Southeast New Mexico College
is looking to hire a
Human Resources Coordinator

A Bachelor degree in a related field with three (3) years of professional experience directly related to the standard duties as outlined is required. However, an equivalency of Associate degree in a related field with five (5) years of professional experience directly related to the standard duties as outlined **OR** no degree with seven (7) years of professional experience directly related to the standard duties as outlined will be accepted. Any equivalent combination of education, training and/or experience as approved by Human Resources Department. **Salary Range: $50,439.41 - $56,744.59 DOE**. For a detailed job description and more information about our campus go to https://senmc.edu/. To apply, **please submit an application, cover letter, resume, and unofficial transcripts by email** to Steven at hr@senmc.edu. For additional information, please call Steven Gonzales at 575-234-9208, or email hr@senmc.edu. **Posting Dates: Open until filled**. SENMC is an equal opportunity and affirmative action employer.

TX-GCI1116418-01

Your Source Public Notices
for the latest...

Legal Notices

STATE OF NEW MEXICO COUNTY OF EDDY FIFTH JUDICIAL DISTRICT COURT SIWELL INC. DBA CAPITAL MORTGAGE SERVICES OF TEXAS, Plaintiff, v. JUSTIN LEVARIO; AMANDA LEVARIO; AND UNKNOWN OCCUPANTS OF THE PROPERTY, Defendant(s). Case No. D-503-CV-2023-00026 AMENDED NOTICE OF SALE NOTICE IS HEREBY GIVEN that on December 14, 2023, at 12:30 p.m. the undersigned Special Master will, at the main entrance of the Eddy County Courthouse, 102 N Canal St Carlsbad, New Mexico 88220, sell all the right, title and interest of the above-named Defendants in and to the hereinafter described real estate to the highest bidder for cash. The property to be sold is located at 911 South 4th Street, Artesia, New Mexico 88210, Eddy County, New Mexico, and is particularly described as follows: LOT 6 IN BLOCK 3 OF THE G.R. BRAINARD REDIVISION OF LOTS 10, 11 AND 12 OF BLOCK 3 ROSELAWN SUBDIVISION, TO THE CITY OF ARTESIA, EDDY COUNTY, NEW MEXICO, AS THE SAME APPEARS ON THE OFFICIAL, FILED PLAT THEREOF ON FILE IN THE OFFICE OF THE COUNTY CLERK OF EDDY COUNTY, NEW MEXICO. EXCEPTING HEREFROM ALL OIL, GAS AND OTHER MINERALS. (the "Property") as the same is shown and designated on the plat thereof, filed in the office of the County Clerk of Eddy County, New Mexico including any improvements, fixtures, and attachments, such as, but not limited to, mobile homes. If there is a conflict between the legal description and the street address, the legal description shall control. THE FOREGOING SALE will be made to satisfy a judgment rendered by the above Court in the above entitled and numbered cause on August 17, 2023, being an action to foreclose a Deed of Trust on the above described property. Plaintiff's Judgment, which includes interest and costs, is $158,496.16 and the same bears interest at 4.750% per annum through the date of sale. The Plaintiff and/or its assignee has the right to bid at such sale and submit its bid verbally or in writing. The Plaintiff may apply all or any part of its judgment to the purchase price in lieu of cash. NOTICE IS FURTHER GIVEN that the undersigned Special Master will, as set forth above, offer for sale and sell the Property to the highest bidder for cash or equivalent, for the purpose of satisfying, in the adjudged order of priorities, the judgment and decree of foreclosure described herein, together with any additional costs and attorney's fees, including the costs of advertisement and publication for the foregoing sale and reasonable receiver and Special Master's fees in an amount to be fixed by the Court. NOTICE IS FURTHER GIVEN that the real property and improvements concerned with herein will be sold subject to any and all patent reservations, easements, all recorded and unrecorded liens and interests not foreclosed herein, and all recorded and unrecorded special assessments, taxes and utility liens that may be due. Plaintiff, its attorneys, and the Special Master disclaim all responsibility for, and the purchaser at the sale takes the property "as is," in its present condition subject to the valuation of the property by the County Assessor as real or personal property, affixture of any mobile or manufactured home to the land, deactivation of, or title status to, a mobile or manufactured home on the property, if any, environmental contamination on the property, if any, substandard conditions or code violations, if any, and zoning violations concerning the property, if any. NOTICE IS FURTHER GIVEN that the foregoing sale may be postponed and rescheduled at the discretion of the Special Master, and is subject to all taxes, utility liens and other restrictions and easements of record. NOTICE IS FURTHER GIVEN that the purchaser at such sale shall take title to the above described real property subject to a one (1) month right of redemption held by Defendant Borrowers or their assignee upon entry of an order approving sale, and subject to the entry of an order of the Court approving the terms and conditions of sale. Witness my hand this 3rd day of October 2023. By: /S/ Robert Doyle Robert Doyle Special Master Legal Process Network PO Box 51526 Albuquerque, NM 87181 505-417-4113
#0005838454, Current Argus, Oct. 13, 20, 27, Nov. 3, 2023

Legal Notices

STATE OF NEW MEXICO
COUNTY OF EDDY
FIFTH JUDICIAL DISTRICT

NO. D-503-CV-2022-00891

IDAHO HOUSING AND FINANCE ASSOCIATION,
Plaintiff,
v.

SARAH REGION, NEW MEXICO MORTGAGE FINANCE AUTHORITY
Defendants.

NOTICE OF SALE

NOTICE IS HEREBY GIVEN that the undersigned Special Master will on December 5, 2023 at 11:30 a.m., outside the front entrance of the Eddy County Courthouse, 102 North Canal, Carlsbad, NM, sell and convey to the highest bidder for cash all the right, title, and interest of the above-named defendants in and to the following described real estate located in said County and State:
Lot 10, Block 218, Tracy Addition, to the City of Carlsbad Eddy County, New Mexico, as shown on the Official Plat thereof on file in the Office of the County Clerk of Eddy County, New Mexico.

the street address of the real property is 1032 N Main Street, Carlsbad, NM 88220. Plaintiff does not represent or warrant that the stated street address is the street address of the described property; if the street address does not match the legal description, then the property being sold herein is the property more particularly described above, not the property located at the street address; any prospective purchaser at the sale is given notice that it should verify the location and address of the property being sold. Said sale will be made pursuant to the Summary and Stipulated Judgment, Decree of Foreclosure, and Appointment of Special Master entered on October 11, 2023 in the above entitled and numbered cause, which was a suit to foreclose a mortgage held by the above Plaintiff and wherein Plaintiff was adjudged to have a lien against the above-described real estate in the sum of $141,310.22, plus interest from June 2, 2023 to the date of sale at the rate of 3.750% per annum, the costs of sale, including the Special Master's fee, publication costs, and Plaintiff's costs expended for taxes, insurance, and keeping the property in good repair. Plaintiff has the right to bid at such sale and submit its bid verbally or in writing. The Plaintiff may apply all or any part of its judgment to the purchase price in lieu of cash.
At the date and time stated above, the Special Master may postpone the sale to such later date and time as the Special Master may specify.
NOTICE IS FURTHER GIVEN that this sale may be subject to a bankruptcy filing, a payoff, a reinstatement or any other condition that would cause the cancellation of this sale. Further, if any of these conditions exist, at the time of sale, this sale will be null and void, the successful bidder's funds shall be returned, and the Special Master and the mortgagee giving this notice shall not be liable to the successful bidder for any damages.
NOTICE IS FURTHER GIVEN that the real property and improvements concerned with herein will be sold subject to any and all patent reservations, easements, all recorded and unrecorded liens not foreclosed herein, and all recorded and unrecorded special assessments and taxes that may be due. Plaintiff and its attorneys disclaim all responsibility for, and the purchaser at the sale takes the property subject to, the valuation of the property by the County Assessor as real or personal property, affixture of any mobile or manufactured home to the land, deactivation of title to a mobile or manufactured home on the property, if any, environmental contamination on the property, if any, and zoning violations concerning the property, if any.
NOTICE IS FURTHER GIVEN that the purchaser at such sale shall take title to the above-described real property subject to rights of redemption.
Dated: October 20, 2023.

/s/ Margaret Lake
Margaret Lake
Special Master
Pro Legal Services, LLC
201 Eubank Blvd. NE, Suite A1
Albuquerque, NM 87123
(505)715-3711
#5850606, Current Argus, Oct. 27, Nov. 3, 10, 17, 2023

Legal Notices

NOTICE OF AIR QUALITY PERMIT APPLICATION

XTO Energy, Inc. announces its application submittal to the New Mexico Environment Department for an air quality permit for the **modification** of its **Cowboy CDP** facility. The expected date of application submittal to the Air Quality Bureau is **November 3, 2023.**

The exact location for the proposed facility known as, **Cowboy CDP**, is at **latitude 32.15992 dec deg** and **longitude -103.84160 dec deg.** The approximate location of this facility is **14.0** miles **SE** of **Malaga** in **Eddy** County, NM.

The proposed **modification** consists of an addition of six (6) oil tanks, updating fugitive component counts, and updating the flare emissions.
The estimated maximum quantities of any regulated air contaminant will be as follows in pound per hour (pph) and tons per year (tpy) and could change slightly during the course of the Department's review:

Pollutant:	Pounds per hour	Tons per year
Particulate Matter (PM)	81	40
PM 10	79	40
PM 2.5	79	40
Sulfur Dioxide (SO2)	7	28
Nitrogen Oxides (NOx)	575	190
Carbon Monoxide (CO)	1120	159
Volatile Organic Compounds (VOC)	1751	205
Total sum of all Hazardous Air Pollutants (HAPs)	30	11
Green House Gas Emissions as Total CO2e	n/a	1,012,749

The standard and maximum operating schedules of the facility will be 24 hours per day, 7 days a week and a maximum of 52 weeks per year.

The owner and/or operator of the Facility is:
XTO Energy, Inc.
22777 Springwoods Village Pkwy
Spring Texas 77389

If you have any comments about the construction or operation of this facility, and you want your comments to be made as part of the permit review process, you must submit your comments in writing to this address: Permit Programs Manager; New Mexico Environment Department; Air Quality Bureau; 525 Camino de los Marquez, Suite 1; Santa Fe, New Mexico; 87505-1816. Other comments and questions may be submitted verbally. (505) 476-4300; 1 800 224-7009.

Please refer to the company name and site name, or send a copy of this notice along with your comments, since the Department may have not yet received the permit application. Please include a legible return mailing address with your comments. Once the Department has performed a preliminary review of the application and its air quality impacts, the Department's notice will be published in the legal section of a newspaper circulated near the facility location.

General information about air quality and the permitting process, and links to the regulations can be found at the Air Quality Bureau's website: www.env.nm.gov/air-quality/permitting-section-home-page/. The regulation dealing with public participation in the permit review process is 20.2.72.206 NMAC.

Attención
Este es un aviso de la oficina de Calidad del Aire del Departamento del Medio Ambiente de Nuevo México, acerca de las emisiones producidas por un establecimiento en esta área. Si usted desea información en español, por favor comuníquese con esa oficina al teléfono 505-629-3395.

Notice of Non-Discrimination
NMED does not discriminate on the basis of race, color, national origin, disability, age or sex in the administration of its programs or activities, as required by applicable laws and regulations. NMED is responsible for coordination of compliance efforts and receipt of inquiries concerning non-discrimination requirements implemented by 40 C.F.R. Part 7, including Title VI of the Civil Rights Act of 1964, as amended; Section 504 of the Rehabilitation Act of 1973; the Age Discrimination Act of 1975, Title IX of the Education Amendments of 1972, and Section 13 of the Federal Water Pollution Control Act Amendments of 1972. If you have any questions about this notice or any of NMED's non-discrimination programs, policies or procedures, or if you believe that you have been discriminated against with respect to a NMED program or activity, you may contact: Non-Discrimination Coordinator, NMED, 1190 St. Francis Dr., Suite N4050, P.O. Box 5469, Santa Fe, NM 87502, (505) 827-2855, nd.coordinator@env.nm.gov. You may also visit our website at https://www.env.nm.gov/non-employee-discrimination-complaint-page/ to learn how and where to file a complaint of discrimination.
#5852571, Current Argus, November 3, 2023

Legal Notices

STATE OF NEW MEXICO
COUNTY OF EDDY
FIFTH JUDICIAL DISTRICT COURT

TOWD POINT MASTER FUNDING TRUST 2021-PM1,
Plaintiff,
v.

CAS TABOR AS PERSONAL REPRESENTATIVE OF THE ESTATE OF BEVERLY S. YOUNG; KENNETH W. YOUNG, JR.; RAY DOYCE GUNNELLS; THE UNKNOWN HEIRS, DEVISEES OR LEGATEES OF SHELI KAY GUNNELLS
KELLY, DECEASED; AND UNKNOWN OCCUPANTS OF THE PROPERTY,
Defendants.

Case No.
D-503-CV-2022-00344

NOTICE OF SUIT

STATE OF NEW MEXICO to the above-named Defendant THE UNKNOWN HEIRS, DEVISEES OR LEGATEES OF SHELI KAY GUNNELLS KELLY, DECEASED;
GREETINGS:
You are hereby notified that the above-named Plaintiff has filed a civil action against you
in the above-entitled Court and cause, the general object thereof being to foreclose a Mortgage on property located at 4809 Adobe St, Carlsbad, Eddy County, New Mexico, more particularly described as:
LOT 15, BLOCK 6 HAGERMAN ACRES UNIT NO 1, TO THE CITY OF CARLSBAD, EDDY COUNTY, NEW MEXICO, AS SHOWN ON THE OFFICIAL PLAT THEREOF ON FILE IN THE OFFICE OF THE COUNTY CLERK OF EDDY COUNTY, NEW MEXICO. EXCEPTING HEREFROM: ALL OIL, GAS AND OTHER MINERALS.

Unless you serve a pleading or motion in response to the complaint in said cause on or before 30 days after the last publication date, default judgment will be entered against you.

Respectfully Submitted,
ALDRIDGE PITE, LLP

By: /s/ Toby Lutenegger
Toby Lutenegger
Attorney for Plaintiff
4801 Lang Ave NE #110
Albuquerque NM 87109
858-750-7600
#5850248, Current Argus, Oct 27, Nov 3, 10, 2023

Legal Notices

NOTICE OF AIR QUALITY PERMIT APPLICATION

XTO Energy, Inc. announces its application submittal to the New Mexico Environment Department for an air quality permit for the **modification** of its **Cowboy CDP** facility. The expected date of application submittal to the Air Quality Bureau is **November 3, 2023.**

The exact location for the proposed facility known as, **Cowboy CDP**, is at **latitude 32.15992 dec deg** and **longitude -103.84160 dec deg.** The approximate location of this facility is **14.0** miles **SE** of **Malaga** in **Eddy** County, NM.

The proposed **modification** consists of an addition of six (6) oil tanks, updating fugitive component counts, and updating the flare emissions.

The estimated maximum quantities of any regulated air contaminant will be as follows in pound per hour (pph) and tons per year (tpy) and could change slightly during the course of the Department's review:

Pollutant:	Pounds per hour	Tons per year
Particulate Matter (PM)	81	40
PM_{10}	79	40
$PM_{2.5}$	79	40
Sulfur Dioxide (SO_2)	7	28
Nitrogen Oxides (NO_x)	575	190
Carbon Monoxide (CO)	1120	159
Volatile Organic Compounds (VOC)	1751	205
Total sum of all Hazardous Air Pollutants (HAPs)	30	11
Green House Gas Emissions as Total CO_2e	n/a	1,012,749

The standard and maximum operating schedules of the facility will be 24 hours per day, 7 days a week and a maximum of 52 weeks per year.

The owner and/or operator of the Facility is:

XTO Energy, Inc.
22777 Springwoods Village Pkwy
Spring Texas 77389

If you have any comments about the construction or operation of this facility, and you want your comments to be made as part of the permit review process, you must submit your comments in writing to this address: Permit Programs Manager; New Mexico Environment Department; Air Quality Bureau; 525 Camino de los Marquez, Suite 1; Santa Fe, New Mexico; 87505-1816. Other comments and questions may be submitted verbally. (505) 476-4300; 1 800 224-7009.

Please refer to the company name and site name, or send a copy of this notice along with your comments, since the Department may have not yet received the permit application. Please include a legible return mailing address with your comments. Once the Department has performed a preliminary review of the application and its air quality impacts, the Department's notice will be published in the legal section of a newspaper circulated near the facility location.

General information about air quality and the permitting process, and links to the regulations can be found at the Air Quality Bureau's website: www.env.nm.gov/air-quality/permitting-section-home-page/. The regulation dealing with public participation in the permit review process is 20.2.72.206 NMAC.

Attención
Este es un aviso de la oficina de Calidad del Aire del Departamento del Medio Ambiente de Nuevo México, acerca de las emisiones producidas por un establecimiento en esta área. Si usted desea información en español, por favor comuníquese con esa oficina al teléfono 505-629-3395.

Notice of Non-Discrimination
NMED does not discriminate on the basis of race, color, national origin, disability, age or sex in the administration of its programs or activities, as required by applicable laws and regulations. NMED is responsible for coordination of compliance efforts and receipt of inquiries concerning non-discrimination requirements implemented by 40 C.F.R. Part 7, including Title VI of the Civil Rights Act of 1964, as amended; Section 504 of the Rehabilitation Act of 1973; the Age Discrimination Act of 1975, Title IX of the Education Amendments of 1972, and Section 13 of the Federal Water Pollution Control Act Amendments of 1972. If you have any questions about this notice or any of NMED's non-discrimination programs, policies or procedures, or if you believe that you have been discriminated against with respect to a NMED program or activity, you may contact: Non-Discrimination Coordinator, NMED, 1190 St. Francis Dr., Suite N4050, P.O. Box 5469, Santa Fe, NM 87502, (505) 827-2855, nd.coordinator@env.nm.gov. You may also visit our website at https://www.env.nm.gov/non-employee-discrimination-complaint-page/ to learn how and where to file a complaint of discrimination.

TX-GCI1118177-01

CLASSIFIEDS
Find Cars, Jobs, Apartments & more!
Search for classifieds in your area.

FIND A JOB
LIST A HOME
BUY A CAR
ADOPT A PET
BUY A BOAT
FIND A RENTAL

Carlsbad Current Argus.

PART OF THE USA TODAY NETWORK

Affidavit of Publication

Ad # 0005852571

This is not an invoice

TRINITY CONSULTANTS
9400 HOLLY AVE NE

ALBUQUERQUE, NM 87122-2968

I, a legal clerk of the **Carlsbad Current Argus**, a newspaper published daily at the City of Carlsbad, in said county of Eddy, state of New Mexico and of general paid circulation in said county; that the same is a duly qualified newspaper under the laws of the State wherein legal notices and advertisements may be published; that the printed notice attached hereto was published in the regular and entire edition of said newspaper and not in supplement thereof in editions dated as follows:

11/03/2023

Legal Clerk

Subscribed and sworn before me this November 3, 2023:

State of WI, County of Brown
NOTARY PUBLIC

1-7-28

My commission expires

KATHLEEN ALLEN
Notary Public
State of Wisconsin

Ad # 0005852571
PO #: 233201.0075
# of Affidavits 1

This is not an invoice

NOTICE OF AIR QUALITY PERMIT APPLICATION

XTO Energy, Inc. announces its application submittal to the New Mexico Environment Depa air quality permit for the **modification** of its **Cowboy CDP** facility. The expected date of ap mittal to the Air Quality Bureau is **November 3, 2023.**

The exact location for the proposed facility known as, **Cowboy CDP**, is at **latitude 32.15992 longitude -103.84160 dec deg.** The approximate location of this facility is **14.0** miles **SE** of l dy County, NM.

The proposed **modification** consists of an addition of six (6) oil tanks, updating fugitiv counts, and updating the flare emissions.
The estimated maximum quantities of any regulated air contaminant will be as follows in pc (pph) and tons per year (tpy) and could change slightly during the course of the Department's

Pollutant:	Pounds per hour	Tons per year
Particulate Matter (PM)	81	40
PM 10	79	40
PM 2.5	79	40
Sulfur Dioxide (SO2)	7	28
Nitrogen Oxides (NOx)	575	190
Carbon Monoxide (CO)	1120	159
Volatile Organic Compounds (VOC)	1751	205
Total sum of all Hazardous Air Pollutants (HAPs)	30	11
Green House Gas Emissions as Total CO2e	n/a	1,012,749

The standard and maximum operating schedules of the facility will be 24 hours per day, 7 and a maximum of 52 weeks per year.

The owner and/or operator of the Facility is:
XTO Energy, Inc.
22777 Springwoods Village Pkwy
Spring Texas 77389

If you have any comments about the construction or operation of this facility, and you wa ments to be made as part of the permit review process, you must submit your comments in v address: Permit Programs Manager; New Mexico Environment Department; Air Quality Bure no de los Marquez, Suite 1; Santa Fe, New Mexico; 87505-1816. Other comments and que: submitted verbally. (505) 476-4300; 1 800 224-7009.

Please refer to the company name and site name, or send a copy of this notice along w ments, since the Department may have not yet received the permit application. Please inc return mailing address with your comments. Once the Department has performed a prelir of the application and its air quality impacts, the Department's notice will be published in tion of a newspaper circulated near the facility location.

General information about air quality and the permitting process, and links to the regul found at the Air Quality Bureau's website: www.env.nm.gov/air-quality/permitting-section- The regulation dealing with public participation in the permit review process is 20.2.72.206 NM

Attención
Este es un aviso de la oficina de Calidad del Aire del Departamento del Medio Ambier México, acerca de las emisiones producidas por un establecimiento en esta área. Si información en español, por favor comuníquese con esa oficina al teléfono 505-629-3395.

Notice of Non-Discrimination
NMED does not discriminate on the basis of race, color, national origin, disability, age or : ministration of its programs or activities, as required by applicable laws and regulations. NM sible for coordination of compliance efforts and receipt of inquiries concerning non-discr quirements implemented by 40 C.F.R. Part 7, including Title VI of the Civil Rights Act of 1964, Section 504 of the Rehabilitation Act of 1973; the Age Discrimination Act of 1975, Title IX tion Amendments of 1972, and Section 13 of the Federal Water Pollution Control Act An 1972. If you have any questions about this notice or any of NMED's non-discrimination prog or procedures, or if you believe that you have been discriminated against with respect to gram or activity, you may contact: Non-Discrimination Coordinator, NMED, 1190 St. Fran N4050, P.O. Box 5469, Santa Fe, NM 87502, (505) 827-2855, nd.coordinator@env.nm.gov. visit our website at https://www.env.nm.gov/non-employee-discrimination-complaint-page/ and where to file a complaint of discrimination.
#5852571, Current Argus, November 3, 2023

NOTICE OF AIR QUALITY PERMIT APPLICATION

XTO Energy, Inc. announces its application submittal to the New Mexico Environment Department for an air quality permit for the **modification** of its **Cowboy CDP** facility. The expected date of application submittal to the Air Quality Bureau is **November 3, 2023.**

The exact location for the proposed facility known as, **Cowboy CDP**, is at **latitude 32.15992 dec deg** and **longitude -103.84160 dec deg.** The approximate location of this facility is **14.0** miles **SE** of **Malaga** in **Eddy** County, NM.

The proposed **modification** consists of an addition of six (6) oil tanks, updating fugitive component counts, and updating the flare emissions.
The estimated maximum quantities of any regulated air contaminant will be as follows in pound per hour (pph) and tons per year (tpy) and could change slightly during the course of the Department's review:

Pollutant:	Pounds per hour	Tons per year
Particulate Matter (PM)	81	40
PM 10	79	40
PM 2.5	79	40
Sulfur Dioxide (SO2)	7	28
Nitrogen Oxides (NOx)	575	190
Carbon Monoxide (CO)	1120	159
Volatile Organic Compounds (VOC)	1751	205
Total sum of all Hazardous Air Pollutants (HAPs)	30	11
Green House Gas Emissions as Total CO2e	n/a	1,012,749

The standard and maximum operating schedules of the facility will be 24 hours per day, 7 days a week and a maximum of 52 weeks per year.

The owner and/or operator of the Facility is:
XTO Energy, Inc.
22777 Springwoods Village Pkwy
Spring Texas 77389

If you have any comments about the construction or operation of this facility, and you want your comments to be made as part of the permit review process, you must submit your comments in writing to this address: Permit Programs Manager; New Mexico Environment Department; Air Quality Bureau; 525 Camino de los Marquez, Suite 1; Santa Fe, New Mexico; 87505-1816. Other comments and questions may be submitted verbally. (505) 476-4300; 1 800 224-7009.

Please refer to the company name and site name, or send a copy of this notice along with your comments, since the Department may have not yet received the permit application. Please include a legible return mailing address with your comments. Once the Department has performed a preliminary review of the application and its air quality impacts, the Department's notice will be published in the legal section of a newspaper circulated near the facility location.

General information about air quality and the permitting process, and links to the regulations can be found at the Air Quality Bureau's website: www.env.nm.gov/air-quality/permitting-section-home-page/. The regulation dealing with public participation in the permit review process is 20.2.72.206 NMAC.

Attención
Este es un aviso de la oficina de Calidad del Aire del Departamento del Medio Ambiente de Nuevo México, acerca de las emisiones producidas por un establecimiento en esta área. Si usted desea información en español, por favor comuníquese con esa oficina al teléfono 505-629-3395.

Notice of Non-Discrimination
NMED does not discriminate on the basis of race, color, national origin, disability, age or sex in the administration of its programs or activities, as required by applicable laws and regulations. NMED is responsible for coordination of compliance efforts and receipt of inquiries concerning non-discrimination requirements implemented by 40 C.F.R. Part 7, including Title VI of the Civil Rights Act of 1964, as amended; Section 504 of the Rehabilitation Act of 1973; the Age Discrimination Act of 1975, Title IX of the Education Amendments of 1972, and Section 13 of the Federal Water Pollution Control Act Amendments of 1972. If you have any questions about this notice or any of NMED's non-discrimination programs, policies or procedures, or if you believe that you have been discriminated against with respect to a NMED program or activity, you may contact: Non-Discrimination Coordinator, NMED, 1190 St. Francis Dr., Suite N4050, P.O. Box 5469, Santa Fe, NM 87502, (505) 827-2855, nd.coordinator@env.nm.gov. You may also visit our website at https://www.env.nm.gov/non-employee-discrimination-complaint-page/ to learn how and where to file a complaint of discrimination.
#5852571, Current Argus, November 3, 2023

geometry	UPC	Map Number	Owner Address1	Owner Address2	Owner Address City	Owner Address State	Owner Address Zip Code	Site Address	Legal Description	Model Type	Land Acreage	Actual Area	Tax Area	Land Code
Geocortex.Gis.Geometries.Polygon	4-180-144-264-264		310 OLD SANTA FE		SANTA FE	NM	87504		Quarter: NE S: 36 T: 24S R: 30E Quarter: NW S: 36 T: 24S R: 30E Quarter: SW S: 36 T: 24S R: 30E Quarter: SE S: 36 T: 24S R: 30E ALL EXEMPT	Land	2880	640	CO_NR	149_4_5
Geocortex.Gis.Geometries.Polygon	4-181-144-265-253								Quarter: NE S: 31 T: 24S R: 31E Quarter: NW S: 31 T: 24S R: 31E Quarter: SW S: 31 T: 24S R: 31E Quarter: SE S: 31 T: 24S R: 31E ALL MAP# 370-31 EXEMPT	Land	2880	640	CO_NR	141_4_5
Geocortex.Gis.Geometries.Polygon	4-179-144-264-262								Quarter: NE S: 35 T: 24S R: 30E Quarter: NW S: 35 T: 24S R: 30E Quarter: SW S: 35 T: 24S R: 30E Quarter: SE S: 35 T: 24S R: 30E ALL MAP# 369- LOC EXEMPT	Land	2880	640	CO_NR	137_4_5
Geocortex.Gis.Geometries.Polygon	4-179-145-266-333		310 OLD SANTA FE		SANTA FE	NM	87504		Quarter: NE S: 2 T: 25S R: 30E Quarter: NW S: 2 T: 25S R: 30E Quarter: SW S: 2 T: 25S R: 30E Quarter: SE S: 2 T: 25S R: 30E ALL MAP# 385-2 CALVIN TENNISON, SUPERIOR SLATE #2 TEMPO	Land	2880	640	CO_NR	153_4_5
Geocortex.Gis.Geometries.Polygon	4-180-146-266-269								Quarter: NE S: 12 T: 25S R: 30E Quarter: NW S: 12 T: 25S R: 30E Quarter: SW S: 12 T: 25S R: 30E Quarter: SE S: 12 T: 25S R: 30E ALL MAP# 385-12 LOC EXEMPT	Land	2880	640	CO_NR	141_4_5
Geocortex.Gis.Geometries.Polygon	4-181-145-265-266								Quarter: NE S: 6 T: 25S R: 31E Quarter: NW S: 6 T: 25S R: 31E Quarter: SW S: 6 T: 25S R: 31E Quarter: SE S: 6 T: 25S R: 31E ALL MAP# 386-6 LOC CARLSBAD EXEMPT	Land	2916	647.78	CO_NR	141_4_5
Geocortex.Gis.Geometries.Polygon	4-181-146-264-265								Quarter: NE S: 7 T: 25S R: 31E Quarter: NW S: 7 T: 25S R: 31E Quarter: SW S: 7 T: 25S R: 31E Quarter: SE S: 7 T: 25S R: 31E ALL MAP# 386-7 LOC CARLSBAD EXEMPT	Land	2934	652.29	CO_NR	141_4_5
Geocortex.Gis.Geometries.Polygon	4-180-145-266-335							900 BUCK JACKSON ROAD	Quarter: NE S: 1 T: 25S R: 30E Quarter: NW S: 1 T: 25S R: 30E Quarter: SW S: 1 T: 25S R: 30E Quarter: SE S: 1 T: 25S R: 30E ALL LESS SENE MAP# 385-1 LOC S & W OF 900 BUCK JACKSON	Land	2700	600	CO_NR	141_4_5
Geocortex.Gis.Geometries.Polygon	4-180-145-465-199	385-1.1	101 W GREENE ST		CARLSBAD	NM	88220	810 BUCK JACKSON ROAD	S: 1 T: 25S R: 30E SENE	Land	100000	40	CO_NR	111_249999
Geocortex.Gis.Geometries.Polygon	4-179-146-266-266								Quarter: NE S: 11 T: 25S R: 30E Quarter: NW S: 11 T: 25S R: 30E Quarter: SW S: 11 T: 25S R: 30E Quarter: SE S: 11 T: 25S R: 30E ALL MAP# 385-11 LOC EXEMPT	Land	2880	640	CO_NR	141_4_5

Data Source: County Assessor | Eddy County, NM https://portico.mygisonline.com/html5/?viewer=eddynm

7014 2870 0001 4722 7640

U.S. Postal Service™
CERTIFIED MAIL® RECEIPT
Domestic Mail Only

For delivery information, visit our website at *www.usps.com®*.

OFFICIAL

Postage	$
Certified Fee	
Return Receipt Fee (Endorsement Required)	
Restricted Delivery Fee (Endorsement Required)	
Total Postage & Fees	$

$0.00[9]
US POSTAGE
11/1/2023
062S12395454
87113
000027977

Sent To Lea County Manager
Street & Apt. No., or PO Box No. 100 N. Main Avenue, Suite 4
City, State, ZIP+4 Lovington, NM 88260

PS Form 3800, July 2014 — See Reverse for Instructions

7014 2870 0001 4722 7657

U.S. Postal Service™
CERTIFIED MAIL® RECEIPT
Domestic Mail Only

For delivery information, visit our website at *www.usps.com®*.

OFFICIAL

Postage	$
Certified Fee	
Return Receipt Fee (Endorsement Required)	
Restricted Delivery Fee (Endorsement Required)	
Total Postage & Fees	$

$0.00[9]
US POSTAGE
11/1/2023
062S12395454
87113
000027978

Sent To State of New Mexico Land Office
Street & Apt. No., or PO Box No. 310 Old Santa Fe Trail
City, State, ZIP+4 Santa Fe, NM 87504

PS Form 3800, July 2014 — See Reverse for Instructions

7014 2870 0001 4722 7626

U.S. Postal Service™
CERTIFIED MAIL® RECEIPT
Domestic Mail Only

For delivery information, visit our website at

OFFICIAL

Postage	$
Certified Fee	
Return Receipt Fee (Endorsement Required)	
Restricted Delivery Fee (Endorsement Required)	
Total Postage & Fees	$

$0.00[9]
US POSTAGE
11/1/2023
062S12395454
87113
000027975

Sent To Bureau of Land Management
Street & Apt. No., or PO Box No. 620 E. Greene St.
City, State, ZIP+4 Carlsbad, NM 88220-6292

PS Form 3800, July 2014 — See Reverse for Instructions

7014 2870 0001 4722 7633

U.S. Postal Service™
CERTIFIED MAIL® RECEIPT
Domestic Mail Only

For delivery information, visit our website at *www.usps.com®*.

OFFICIAL

Postage	$
Certified Fee	
Return Receipt Fee (Endorsement Required)	
Restricted Delivery Fee (Endorsement Required)	
Total Postage & Fees	$

$0.00[9]
US POSTAGE
11/1/2023
062S12395454
87113
000027976

Sent To Eddy County Manager
Street & Apt. No., or PO Box No. 101 W. Greene St. Suite110
City, State, ZIP+4 Carlsbad, NM 88220

PS Form 3800, July 2014 — See Reverse for Instructions

General Posting of Notices – Certification

I, Patrick Ruszkowski, the undersigned, certify that on **{DATE},** posted a true and correct copy of the attached Public Notice in the following publicly accessible and conspicuous places in the City of Carlsbad of Eddy County, State of New Mexico on the following dates:

1. Cowboy CDP entrance 10/30/2023
2. Carlsbad Main Post office 10/30/2023
3. Carlsbad Main Library 10/30/2023
4. Eddy County Clerk's Office 10/30/2023

Signed this 30th day of October, 2023,

Patrick Ruszkowski
Signature

10/30/2023
Date

Patrick Ruszkowski
Printed Name

Cowboy CDP Regulatory Technician Lead / Title V
Title {APPLICANT OR RELATIONSHIP TO APPLICANT}

Oct 30, 2023 at 11:48:07 AM
+32.158996,-103.842347
Eddy County
Cowboy entrance

NOTICE

XTO Energy, Inc. announces its application to the New Mexico Environment Department for an air quality permit for the **modification** of its **Cowboy CDP** facility. The expected date of application submittal to the Air Quality Bureau is **November 3, 2023**.

The exact location for the proposed facility known as, **Cowboy CDP**, is at latitude **32.15992 dec deg** and longitude **-103.84160 dec deg**. The approximate location of this facility is **14.0** miles **SE** of **Malaga** in **Eddy** County, NM.

The proposed **modification** consists of an addition of six (6) oil tanks, updating fugitive component counts, and updating the flare emissions.

The estimated maximum quantities of any regulated air contaminants will be as follows in pound per hour (pph) and tons per year (tpy). These reported emissions could change slightly during the course of the Department's review:

Pollutant:	Pounds per hour	Tons per year
Particulate Matter (PM)	81	40
PM_{10}	79	40
$PM_{2.5}$	79	40
Sulfur Dioxide (SO_2)	7	28
Nitrogen Oxides (NO_x)	575	190
Carbon Monoxide (CO)	1120	159
Volatile Organic Compounds (VOC)	1751	205
Total sum of all Hazardous Air Pollutants (HAPs)	30	11
Green House Gas Emissions as Total CO_2e	n/a	1,012,749

The standard and maximum operating schedules of the facility will be 24 hours per day, 7 days a week and a maximum of 52 weeks per year.

The owner and/or operator of the Facility is:
XTO Energy, Inc.
22777 Springwoods Village Pkwy
Spring Texas 77389

If you have any comments about the construction or operation of this facility, and you want your comments to be made as part of the permit review process, you must submit your comments in writing to this address: Permit Programs Manager; New Mexico Environment Department; Air Quality Bureau; 525 Camino de los Marquez, Suite 1; Santa Fe, New Mexico; 87505-1816. Other comments and questions may be submitted verbally. (505) 476-4300; 1 800 224-7009.

With your comments, please refer to the company name and facility name, or send a copy of this notice along with your comments. This information is necessary since the Department may have not yet received the

General information about air quality and the permitting process, and links to the regulations can be found on the Air Quality Bureau's website: www.env.nm.gov/air-quality/permitting-section-home-page/. The regulations dealing with public participation in the permit review process is 20.2.72.206 NMAC.

Attención
Este es un aviso de la oficina de Calidad del Aire del Departamento del Medio Ambiente de Nuevo México acerca de las emisiones producidas por un establecimiento en esta área. Si usted desea información en español, por favor comuníquese con esa oficina al teléfono 505-629-3395.

Notice of Non-Discrimination
NMED does not discriminate on the basis of race, color, national origin, disability, age or sex in the administration of its programs or activities, as required by applicable laws and regulations. NMED is responsible for coordination of compliance efforts and receipt of inquiries concerning non-discrimination requirements implemented by 40 C.F.R. Part 7, including Title VI of the Civil Rights Act of 1964, as amended; Section 504 of the Rehabilitation Act of 1973; the Age Discrimination Act of 1975, Title IX of the Education Amendments of 1972, and Section 13 of the Federal Water Pollution Control Act Amendments of 1972. If you have any questions about this notice or any of NMED's non-discrimination programs, policies or procedures, or if you believe that you have been discriminated against with respect to a NMED program or activity, you may contact: Non-Discrimination Coordinator, NMED, 1190 St. Francis Dr., Suite N4050, P.O. Box 5469, Santa Fe, NM 87502, (505) 827-2855, nd.coordinator@env.nm.gov. You may also visit our website at https://www.env.nm.gov/non-employee-discrimination-complaint-page/ to learn how and where to file a complaint of discrimination.

Eddy county clerk's office

NOTICE

XTO Energy, Inc. announces its application to the New Mexico Environment Department for an air quality permit for the **modification** of its **Cowboy CDP** facility. The expected date of application submittal to the Air Quality Bureau is **November 3, 2023.**

The exact location for the proposed facility known as, **Cowboy CDP**, is at latitude **32.15992 dec deg** and longitude **-103.84160 dec deg**. The approximate location of this facility is **14.0** miles **SE** of **Malaga** in **Eddy** County, NM.

The proposed **modification** consists of an addition of six (6) oil tanks, updating fugitive component counts, and updating the flare emissions.

The estimated maximum quantities of any regulated air contaminants will be as follows in pound per hour (pph) and tons per year (tpy). These reported emissions could change slightly during the course of the Department's review:

Pollutant:	Pounds per hour	Tons per year
Particulate Matter (PM)	81	40
PM_{10}	79	40
$PM_{2.5}$	79	40
Sulfur Dioxide (SO_2)	7	28
Nitrogen Oxides (NO_x)	575	190
Carbon Monoxide (CO)	1120	159
Volatile Organic Compounds (VOC)	1751	205
Total sum of all Hazardous Air Pollutants (HAPs)	30	11
Green House Gas Emissions as Total CO_2e	n/a	1,012,749

The standard and maximum operating schedules of the facility will be 24 hours per day, 7 days a week and a maximum of 52 weeks per year.

The owner and/or operator of the Facility is:
XTO Energy, Inc.
22777 Springwoods Village Pkwy
Spring Texas 77389

If you have any comments about the construction or operation of this facility, and you want your comments to be made as part of the permit review process, you must submit your comments in writing to this address: Permit Programs Manager; New Mexico Environment Department; Air Quality Bureau; 525 Camino de los Marquez, Suite 1; Santa Fe, New Mexico; 87505-1816. Other comments and questions may be submitted verbally. (505) 476-4300; 1 800 224-7009.

With your comments, please refer to the company name and facility name, or send a copy of this notice along with your comments. This information is necessary since the Department may have not yet received the permit application. Please include a legible return mailing address. Once the Department has completed its preliminary review of the application and its air quality impacts, the Department's notice will be published in the legal section of a newspaper circulated near the facility location.

Attención
Este es un aviso de la oficina de Calidad del Aire del Departamento del Medio Ambiente de Nuevo México, acerca de las emisiones producidas por un establecimiento en esta área. Si usted desea información en español, por favor comuníquese con esa oficina al teléfono 505-629-3395.

Notice of Non-Discrimination
NMED does not discriminate on the basis of race, color, national origin, disability, age or sex in the administration of its programs or activities, as required by applicable laws and regulations. NMED is responsible for coordination of compliance efforts and receipt of inquiries concerning non-discrimination requirements implemented by 40 C.F.R. Part 7, including Title VI of the Civil Rights Act of 1964, as amended; Section 504 of the Rehabilitation Act of 1973; the Age Discrimination Act of 1975, Title IX of the Education Amendments of 1972, and Section 13 of the Federal Water Pollution Control Act Amendments of 1972. If you have any questions about this notice or any of NMED's non-discrimination programs, policies or procedures, or if you believe that you have been discriminated against with respect to a NMED program or activity, you may contact: Non-Discrimination Coordinator, NMED, 1190 St. Francis Dr., Suite N4050, P.O. Box 5469, Santa Fe, NM 87502, (505) 827-2855, nd.coordinator@env.nm.gov. You may also visit our website at https://www.env.nm.gov/non-employee-discrimination-complaint-page/ to learn how and where to file a complaint of discrimination.

Oct 30, 2023 at 9:29:42 AM
+32.422689,-104.228059
Eddy County
Post office

NOTICE

XTO Energy, Inc. announces its application to the New Mexico Environment Department for an air quality permit for the **modification** of its **Cowboy CDP** facility. The expected date of application submittal to the Air Quality Bureau is **November 3, 2023.**

The exact location for the proposed facility known as, **Cowboy CDP**, is at latitude **32.15992 dec deg** and longitude **-103.84160 dec deg**. The approximate location of this facility is **14.0** miles **SE** of **Malaga** in **Eddy** County, NM.

The proposed **modification** consists of an addition of six (6) oil tanks, updating fugitive component counts, and updating the flare emissions.

The estimated maximum quantities of any regulated air contaminants will be as follows in pound per hour (pph) and tons per year (tpy). These reported emissions could change slightly during the course of the Department's review:

Pollutant:	Pounds per hour	Tons per year
Particulate Matter (PM)	81	40
PM_{10}	79	40
$PM_{2.5}$	79	40
Sulfur Dioxide (SO_2)	7	28
Nitrogen Oxides (NO_x)	575	190
Carbon Monoxide (CO)	1120	159
Volatile Organic Compounds (VOC)	1751	205
Total sum of all Hazardous Air Pollutants (HAPs)	30	11
Green House Gas Emissions as Total CO_2e	n/a	1,012,749

The standard and maximum operating schedules of the facility will be 24 hours per day, 7 days a week and a maximum of 52 weeks per year.

The owner and/or operator of the Facility is:
XTO Energy, Inc.
22777 Springwoods Village Pkwy
Spring Texas 77389

If you have any comments about the construction or operation of this facility, and you want your comments to be made as part of the permit review process, you must submit your comments in writing to this address: Permit Programs Manager; New Mexico Environment Department; Air Quality Bureau; 525 Camino de los Marquez, Suite 1; Santa Fe, New Mexico; 87505-1816. Other comments and questions may be submitted verbally. (505) 476-4300; 1 800 224-7009.

With your comments, please refer to the company name and facility name, or send a copy of this notice along with your comments. This information is necessary since the Department may have not yet received the permit application. Please include a legible return mailing address. Once the Department has completed its preliminary review of the application and its air quality impacts, the Department's notice will be published in the legal section of a newspaper circulated near the facility location.

Attención
Este es un aviso de la oficina de Calidad del Aire del Departamento del Medio Ambiente de Nuevo México, acerca de las emisiones producidas por un establecimiento en esta área. Si usted desea información en español, por favor comuníquese con esa oficina al teléfono 505-629-3395.

Notice of Non-Discrimination
NMED does not discriminate on the basis of race, color, national origin, disability, age or sex in the administration of its programs or activities, as required by applicable laws and regulations. NMED is responsible for coordination of compliance efforts and receipt of inquiries concerning non-discrimination requirements implemented by 40 C.F.R. Part 7, including Title VI of the Civil Rights Act of 1964, as amended; Section 504 of the Rehabilitation Act of 1973; the Age Discrimination Act of 1975, Title IX of the Education Amendments of 1972, and Section 13 of the Federal Water Pollution Control Act Amendments of 1972. If you have any questions about this notice or any of NMED's non-discrimination programs, policies or procedures, or if you believe that you have been discriminated against with respect to a NMED program or activity, you may contact: Non-Discrimination Coordinator, NMED, 1190 St. Francis Dr., Suite N4050, P.O. Box 5469, Santa Fe, NM 87502, (505) 827-2855, nd.coordinator@env.nm.gov. You may also visit our website at https://www.env.nm.gov/non-employee-discrimination-complaint-page/ to learn how and where to file a complaint of discrimination.

Oct 30, 2023 at 9:46:20 AM
+32.420076,-104.230953
Eddy County
Public library

NOTICE

XTO Energy, Inc. announces its application to the New Mexico Environment Department for an air quality permit for the **modification** of its **Cowboy CDP** facility. The expected date of application submittal to the Air Quality Bureau is **November 3, 2023.**

The exact location for the proposed facility known as, **Cowboy CDP**, is at latitude **32.15992 dec deg** and longitude **-103.84160 dec deg**. The approximate location of this facility is **14.0** miles **SE** of **Malaga** in **Eddy** County, NM.

The proposed **modification** consists of an addition of six (6) oil tanks, updating fugitive component counts, and updating the flare emissions.

The estimated maximum quantities of any regulated air contaminants will be as follows in pound per hour (pph) and tons per year (tpy). These reported emissions could change slightly during the course of the Department's review:

Pollutant:	Pounds per hour	Tons per year
Particulate Matter (PM)	81	40
PM_{10}	79	40
$PM_{2.5}$	79	40
Sulfur Dioxide (SO_2)	7	28
Nitrogen Oxides (NO_x)	575	190
Carbon Monoxide (CO)	1120	159
Volatile Organic Compounds (VOC)	1751	205
Total sum of all Hazardous Air Pollutants (HAPs)	30	11
Green House Gas Emissions as Total CO_2e	n/a	1,012,749

The standard and maximum operating schedules of the facility will be 24 hours per day, 7 days a week and a maximum of 52 weeks per year.

The owner and/or operator of the Facility is:
XTO Energy, Inc.
22777 Springwoods Village Pkwy
Spring Texas 77389

If you have any comments about the construction or operation of this facility, and you want your comments to be made as part of the permit review process, you must submit your comments in writing to this address: Permit Programs Manager; New Mexico Environment Department; Air Quality Bureau; 525 Camino de los Marquez, Suite 1; Santa Fe, New Mexico; 87505-1816. Other comments and questions may be submitted verbally. (505) 476-4300; 1 800 224-7009.

With your comments, please refer to the company name and facility name, or send a copy of this notice along with your comments. This information is necessary since the Department may have not yet received the

Submittal of Public Service Announcement – Certification

I, Mingcheng Ren, the undersigned, certify that on **{DATE** Nov. 1, 2023 **}**, submitted a public service announcement to **{RADIO\TV STATION NAME** Radio KATK - 92.1 FM **}** that serves the City\Town\Village of **{PLACE NAME** Carlsbad **}**, **{COUNTY NAME** Eddy **}** County, New Mexico, in which the source is or is proposed to be located and that **{RADIO\TV STATION NAME** Radio KATK - 92.1 FM **} RESPONDED THAT IT WOULD NOT AIR THE ANNOUNCEMENT WITHOUT A FEE.**

Signed this 1 day of November, 2023.

Mingcheng Ren
Signature

Nov. 1, 2023
Date

Mingcheng Ren
Printed Name

Consultant
Title {APPLICANT OR RELATIONSHIP TO APPLICANT}

NOTICE OF AIR QUALITY PERMIT APPLICATION

XTO Energy, Inc. announces its application submittal to the New Mexico Environment Department for an air quality permit for the **modification** of its **Cowboy Central Delivery Point (CDP)** facility. The expected date of application submittal to the Air Quality Bureau is **November 3, 2023.**

The exact location for the proposed facility known as, **Cowboy CDP**, is at **latitude 32.15992 dec deg** and **longitude -103.84160 dec deg.** The approximate location of this facility is **14.0** miles **SE** of **Malaga** in **Eddy** County, NM.

The proposed **NSR Significant Revision** consists of an addition of six (6) oil tanks, updating fugitive component counts, and updating the flare emissions.

The owner and operator of the Facility is:
XTO Energy, Inc.
22777 Springwoods Village Pkwy
Spring Texas 77389

The notice was posted at the facility and three other public locations: Cowboy CDP entrance, Carlsbad Main Post Office, Eddy County Clerk's Office, and Carlsbad Main Library. If you have any comments about the construction or operation of the above facility, and you want your comments to be made as part of the permit review process, you must submit your comments in writing to the address below:

Permit Programs Manager
New Mexico Environment Department
Air Quality Bureau
525 Camino de los Márquez, Suite 1
Santa Fe, New Mexico 87505-1816
(505) 476-4300, 1 (800) 224-7009

Mingcheng Ren

From: Mingcheng Ren
Sent: Wednesday, November 1, 2023 10:26 AM
To: don@carlsbadradio.com
Cc: Adam Erenstein; Atiqur Rahman
Subject: XTO Energy, Inc. - Cowboy CDP - Public Service Announcement
Attachments: Cowboy CDP NSR Sig Rev_Public Notice 1026-2023 v2 - for PSA.pdf

Dear Radio KATK – 92.1 FM,

Per New Mexico Administrative Code 20.2.72.203.B NMAC and according to the Guidance for Public Notice for Air Quality Permit Applications – **(5) Notifications: Submittal of Public Service Announcement (PSA):** A public service announcement required for permits and significant permit revisions must be submitted to at least one radio or television station, which services the municipality, or county which the facility is or will be located. **Therefore, based on the above, we respectfully ask you to air the announcement attached as a Public Service Announcement.**

The public service announcement request must contain the information attached about the facility or proposed facility (20.2.72.203.D NMAC). Will you please air this attached PSA? Thank you.

Regards,

Mingcheng Ren, Ph.D.
Consultant

9400 Holly Avenue NE, Building 3, Suite B, Albuquerque, NM 87122
Email: Mingcheng.Ren@trinityconsultants.com
(603)-866-0968

Connect with us: LinkedIn / Facebook / Twitter / YouTube / trinityconsultants.com

Stay current on environmental issues. Subscribe today to receive Trinity's free *EHS Quarterly*.

Section 10

Written Description of the Routine Operations of the Facility

---

A written description of the routine operations of the facility. Include a description of how each piece of equipment will be operated, how controls will be used, and the fate of both the products and waste generated. For modifications and/or revisions, explain how the changes will affect the existing process. In a separate paragraph describe the major process bottlenecks that limit production. The purpose of this description is to provide sufficient information about plant operations for the permit writer to determine appropriate emission sources.

The Cowboy Central Delivery Point (CDP) is a gas processing facility with oil and NGL stabilization. The facility will produce sales gas, Y-Grade NGL, and spec oil products. The Cowboy CDP will be built over multiple phases to reach a full processing capacity of 1.0 BCFD of Natural Gas, 600,000 BPD of Oil Stabilization and 190,000 BPD of NGL Stabilization. The overall facility will be designed to accommodate four (4) cryogenic (cryo) trains.

Natural Gas System

The Cowboy CDP gas handling system will be fed by natural gas gathering lines, delivering sweet natural gas to the facility. At the inlet of the facility, these pipelines will be routed to the inlet slug catcher where condensate is separated and routed to the NGL stabilizers to produce Y-Grade NGL product. Gas from the slug catcher will feed each of the four (4) cryo trains. Each cryo train will have a dedicated amine unit (AU1-AU4) to remove CO_2 and a molecular sieve dehydration unit to remove water. The gas will first be treated using MDEA and piperizine in the amine unit to remove carbon dioxide from the gas streams. In the amine regeneration unit for each train, flash gas from the amine flash tank and amine still will be routed to a thermal oxidizer (TO1-TO4) to destroy hazardous air pollutants (HAPs) and volatile organic compounds (VOCs). In the molecular sieve dehydration units, molecular sieve beds are used as to dehydrate the treated gas. The units are not point sources of emissions and therefore not included in Table 2A. In this two-unit design, one unit operates in dehydration mode while the other operates in regeneration mode. Switching from dehydration to regeneration is done by use of automatic switching valves. As the dehydrated unit becomes saturated with water vapor, it is automatically switched to regeneration mode while the regeneration unit becomes active in dehydration mode. When the beds require regeneration due to saturation, a fired regeneration gas heater (RHTR1-RHTR4) with a maximum heat input rate of 35.25 MMBtu/hr will be used to remove water from the mol sieve beds. Following dehydration, the dry gas is cooled and expanded in the cryo units before being boosted by electric drive residue compressor engines into the sales gas pipeline.

NGL System

Natural gas liquids (NGLs) are gathered from surrounding compressor stations and piped into the facility. These pipelines will be combined with the condensate dropout from the slug catcher. This combined liquid stream will be processed through a two-tower condensate stabilization system to produce a “Y-Grade” NGL and a 9 RVP stabilized spec oil. From the first stabilization tower, the overhead gas will be compressed using electric drive compressor engine and sent to the cryo trains, whereas the liquids will be sent to the second tower to produce Y-Grade NGL. The Y-Grade liquids from the second tower will be stored in pressurized bullets and pumped to the NGL sales pipeline. Any gas from the second tower is routed to the cryo trains. Note that the NGLs from the cryo trains will also be pumped to and exported via the same pipeline. The stabilized oil from the second tower will be pumped to the internal floating roof oil storage tanks (IFR1-IFR14), where it is combined with on-spec oil, then routed to the oil sales pipeline. Heat for the stabilization process is provided by eight (8) heaters, each with a maximum heat input rate of 58.93 MMBtu/hr (SHTR1-SHTR8).

Oil System

Oil from surrounding batteries will be routed through the oil inlet surge vessel, which provides initial phase separation of oil and water. Any free water dropout will be routed through a 1,000 bbl gunbarrel separator (GBS1). From GBS1, skimmed oil will be sent to the 500 bbl slop oil tank (OTK7) and the heavier water will be sent to 750 bbl produced water tanks (PWTK1-PWTK2). All tanks are gas blanketed. Slop oil will be pumped back to oil stabilization or trucked offsite. Produced water will be transported offsite via pipeline.

Under normal circumstances, the oil received at the CDP is sent directly from the inlet surge vessel to IFR1-IFR14 for temporary storage before transporting the oil offsite via pipeline. If the incoming oil RVP does not meet sales specifications, it

is sent to the oil stabilization process. Following stabilization, on-spec oil product will be sent to IFR1-IFR14. For flexibility, the inlet oil may be blended with the oil stabilization product to create the desired product. Flash gas from oil stabilization will be recompressed to liquid and routed to the NGL stabilizers.

Hot Oil System

Closed-loop natural gas-fired heater hot oil systems will be used to provide process heat to the NGL and oil stabilization packages, as well as the amine and cryo units. The systems will be packaged units with fired heating, expansion vessel, pumps, and filtration. All NGL stabilizers will be served by a common hot oil loop operating with a 500°F supply temperature. All oil stabilizers will be served by a common hot oil loop. Supply to each oil/NGL stabilizer hot oil loop will be from 58.93 MMBtu/hr burner packages (SHTR1-SHTR8) and circulation pump skids, which can be set to run at either temperature. Each Amine/Cryo train will have its own dedicated hot oil loop served by a 94.54 MMBtu/hr burner package (CHTR1-CHTR4) and pump skid with an expansion vessel.

Flare System

All automated vents and process reliefs will be routed to either the low-pressure or high-pressure headers for the dual-tip flare system, which consists of three dual-tip flares (FL1-FL3). The flares are permitted to manage pilot, purge, and process vessel SSM gas. Any gas that must be removed from the system during an emergency would also be routed to FL1-FL3. Gas may be routed to one or all the flares at any given time.

Combustor

A combustor (ECD1) is used to collect and dispose of vapors emitted from GBS1, SOTK1, PWTK1-PWTK2, and SOTL.

Emergency Generators

The emergency generators for the CDP portion of the plant (GEN1-GEN4) will be used to power safety-sensitive equipment in the event of grid power outages.

Section 11

Source Determination

Source submitting under 20.2.70, 20.2.72, 20.2.73, and 20.2.74 NMAC

Sources applying for a construction permit, PSD permit, or operating permit shall evaluate surrounding and/or associated sources (including those sources directly connected to this source for business reasons) and complete this section. Responses to the following questions shall be consistent with the Air Quality Bureau's permitting guidance, Single Source Determination Guidance, which may be found on the Applications Page in the Permitting Section of the Air Quality Bureau website.

Typically, buildings, structures, installations, or facilities that have the same SIC code, that are under common ownership or control, and that are contiguous or adjacent constitute a single stationary source for 20.2.70, 20.2.72, 20.2.73, and 20.2.74 NMAC applicability purposes. Submission of your analysis of these factors in support of the responses below is optional, unless requested by NMED.

A. Identify the emission sources evaluated in this section (list and describe)**: Please refer to Table 2A.**

B. Apply the 3 criteria for determining a single source:

SIC Code: Surrounding or associated sources belong to the same 2-digit industrial grouping (2-digit SIC code) as this facility, OR surrounding or associated sources that belong to different 2-digit SIC codes are support facilities for this source.

☑ **Yes** ☐ **No**

Common Ownership or Control: Surrounding or associated sources are under common ownership or control as this source.

☑ **Yes** ☐ **No**

Contiguous or Adjacent: Surrounding or associated sources are contiguous or adjacent with this source.

☑ **Yes** ☐ **No**

C. Make a determination:

☑ The source, as described in this application, constitutes the entire source for 20.2.70, 20.2.72, 20.2.73, or 20.2.74 NMAC applicability purposes. If in "A" above you evaluated only the source that is the subject of this application, all "**YES**" boxes should be checked. If in "A" above you evaluated other sources as well, you must check **AT LEAST ONE** of the boxes "**NO**" to conclude that the source, as described in the application, is the entire source for 20.2.70, 20.2.72, 20.2.73, and 20.2.74 NMAC applicability purposes.

☐ The source, as described in this application, **does not** constitute the entire source for 20.2.70, 20.2.72, 20.2.73, or 20.2.74 NMAC applicability purposes (A permit may be issued for a portion of a source). The entire source consists of the following facilities or emissions sources (list and describe):

Section 12

Section 12.A

PSD Applicability Determination for All Sources

(Submitting under 20.2.72, 20.2.74 NMAC)

A PSD applicability determination for all sources. For sources applying for a significant permit revision, apply the applicable requirements of 20.2.74.AG and 20.2.74.200 NMAC and to determine whether this facility is a major or minor PSD source, and whether this modification is a major or a minor PSD modification. It may be helpful to refer to the procedures for Determining the Net Emissions Change at a Source as specified by Table A-5 (Page A.45) of the EPA New Source Review Workshop Manual to determine if the revision is subject to PSD review.

A. This facility is:

- ☑ **a minor PSD source before and after this modification (if so, delete C and D below).**
- ☐ **a major PSD source before this modification. This modification will make this a PSD minor source.**
- ☐ **an existing PSD Major Source that has never had a major modification requiring a BACT analysis.**
- ☐ **an existing PSD Major Source that has had a major modification requiring a BACT analysis**
- ☐ **a new PSD Major Source after this modification.**

XTO Energy's Cowboy CDP is not a PSD facility however it has two (2) PSD nested sources categories. With this application only the "Petroleum storage transfer units, total storage capacity over 300,000 barrels" nested source has changed for tanks (IFR1-IFR14) and other nested source, "Fossil fuel boilers (or combination thereof) totaling more than 250 MMBtu/hr heat input" has remained unchanged. Below is the table for the two PSD nested source categories.

PSD NESTED SOURCE CATEGORY Table 1 (20.2.74.501 NMAC)	NOx	CO	VOC (INCLUDES HAPs)	SO_2	TSP	$PM_{10\ \&\ 2.5}$	H_2SO_4
	TPY	TPY	TPY	TPY	TPY	TPY	TPY
Fossil fuel boilers (or combination thereof) totaling more than 250 MMBtu/hr heat input	98.64	73.25	38.25	9.91	33.48	33.48	-
Petroleum storage transfer units, total storage capacity over 300,000 barrels	1.17	2.34	55.70	0.00	0.028	0.028	-
PSD Categorical Thresholds (tpy)	100	100	100	100	100	100	100
Is Project above SER?	No	No	No	No	No	No	No

Section 13

Determination of State & Federal Air Quality Regulations

This section lists each state and federal air quality regulation that may apply to your facility and/or equipment that are stationary sources of regulated air pollutants.

Not all state and federal air quality regulations are included in this list. Go to the Code of Federal Regulations (CFR) or to the Air Quality Bureau's regulation page to see the full set of air quality regulations.

Required Information for Specific Equipment:
For regulations that apply to specific source types, in the 'Justification' column **provide any information needed to determine if the regulation does or does not apply**. **For example**, to determine if emissions standards at 40 CFR 60, Subpart IIII apply to your three identical stationary engines, we need to know the construction date as defined in that regulation; the manufacturer date; the date of reconstruction or modification, if any; if they are or are not fire pump engines; if they are or are not emergency engines as defined in that regulation; their site ratings; and the cylinder displacement.

Required Information for Regulations that Apply to the Entire Facility:
See instructions in the 'Justification' column for the information that is needed to determine if an 'Entire Facility' type of regulation applies (e.g. 20.2.70 or 20.2.73 NMAC).

Regulatory Citations for Regulations That Do Not, but Could Apply:
If there is a state or federal air quality regulation that does not apply, but you have a piece of equipment in a source category for which a regulation has been promulgated, you must **provide the low level regulatory citation showing why your piece of equipment is not subject to or exempt from the regulation. For example** if you have a stationary internal combustion engine that is not subject to 40 CFR 63, Subpart ZZZZ because it is an existing 2 stroke lean burn stationary RICE with a site rating of more than 500 brake HP located at a major source of HAP emissions, your citation would be 40 CFR 63.6590(b)(3)(i). **We don't want a discussion of every non-applicable regulation, but if it is possible a regulation could apply, explain why it does not. For example,** if your facility is a power plant, you do not need to include a citation to show that 40 CFR 60, Subpart OOO does not apply to your non-existent rock crusher.

Regulatory Citations for Emission Standards:
For each unit that is subject to an emission standard in a source specific regulation, such as 40 CFR 60, Subpart OOO or 40 CFR 63, Subpart HH, include the low level regulatory citation of that emission standard. Emission standards can be numerical emission limits, work practice standards, or other requirements such as maintenance. **Here are examples:** a glycol dehydrator is subject to the general standards at 63.764C(1)(i) through (iii); an engine is subject to 63.6601, Tables 2a and 2b; a crusher is subject to 60.672(b), Table 3 and all transfer points are subject to 60.672(e)(1)

Federally Enforceable Conditions:
All federal regulations are federally enforceable. All Air Quality Bureau State regulations are federally enforceable except for the following: affirmative defense portions at 20.2.7.6.B, 20.2.7.110(B)(15), 20.2.7.11 through 20.2.7.113, 20.2.7.115, and 20.2.7.116; 20.2.37; 20.2.42; 20.2.43; 20.2.62; 20.2.63; 20.2.86; 20.2.89; and 20.2.90 NMAC. Federally enforceable means that EPA can enforce the regulation as well as the Air Quality Bureau and federally enforceable regulations can count toward determining a facility's potential to emit (PTE) for the Title V, PSD, and nonattainment permit regulations.

INCLUDE ANY OTHER INFORMATION NEEDED TO COMPLETE AN APPLICABILITY DETERMINATION OR THAT IS RELEVENT TO YOUR FACILITY'S NOTICE OF INTENT OR PERMIT.

EPA Applicability Determination Index for 40 CFR 60, 61, 63, etc: http://cfpub.epa.gov/adi/

Table for State Regulations:

State Regulation Citation	Title	Applies? Enter Yes or No	Unit(s) or Facility	Justification: (You may delete instructions or statements that do not apply in the justification column to shorten the document.)
20.2.1 NMAC	General Provisions	Yes	Facility	General Provisions apply to Notice of Intent, Construction, and Title V permit applications.
20.2.3 NMAC	Ambient Air Quality Standards NMAAQS	Yes	Facility	20.2.3 NMAC is a State Implementation Plan (SIP) approved regulation that limits the maximum allowable concentration of Sulfur Compounds, Carbon Monoxide and Nitrogen Dioxide. This facility is an affected facility.
20.2.7 NMAC	Excess Emissions	Yes	Facility	The entire facility is subject to emissions limits both federal and state regulation. Thus, the facility is subject to this regulation.
20.2.23 NMAC	Fugitive Dust Control	No	N/A	This regulation does not apply as the facility has no need for fugitive dust control measures. This facility does not fall under the applicability facility listed mentioned in this regulation.
20.2.33 NMAC	Gas Burning Equipment - Nitrogen Dioxide	No	N/A	None of the equipment has a heat input greater than 1,000,000 million BTU per year per unit. Thus, the regulation is not applicable to this facility.
20.2.34 NMAC	Oil Burning Equipment: NO_2	No	N/A	This facility does not have any equipment that burns oil as fuel. Therefore, this regulation is not applicable to this facility.
20.2.35 NMAC	Natural Gas Processing Plant – Sulfur	No	N/A	SO_2 emission of this facility is below the applicable threshold limit established in this regulation. Thus, this regulation is not applicable to this facility.
20.2.37 and 20.2.36 NMAC	Petroleum Processing Facilities and Petroleum Refineries	No	N/A	**These regulations were repealed by the Environmental Improvement Board. If you had equipment subject to 20.2.37 NMAC before the repeal, your combustion emission sources are now subject to 20.2.61 NMAC.**
20.2.38 NMAC	Hydrocarbon Storage Facility	Yes	IFR1-14, SOTK1, GBS1, PWTK1, PWTK2	Hydrocarbon storage capacity of this facility is greater than the threshold 65,000 gal. Therefore, this facility is subject to this regulation.
20.2.39 NMAC	Sulfur Recovery Plant - Sulfur	No	**N/A**	This is a central tank distribution facility. The regulation is not applicable to this facility.
20.2.50 NMAC	Oil and Gas Sector – Ozone Precursor Pollutants	Yes	EOOSCOMP 1-7, ECOSCOMP 1-7, ERESCOMP 1-18, FUG, SOTL, IFR1-14, and PWTK1-2	This regulation establishes emission standards for volatile organic compounds (VOC) and oxides of nitrogen (NOx) for oil and gas production, processing, compression, and transmission sources. 20.2.50 NMAC subparts below: 113 – This facility has electric-powered reciprocating compressors on-site. Thus, the regulation does not apply to this facility. 114 – This facility has electric-powered reciprocating compressors. Thus, this facility is subject to this subpart. The owner will comply with this subpart as stated in the 20.2.50.114.B(2). **Existing Units: EOOSCOMP 1-7, ECOSCOMP 1-7, and ERESCOMP 1-18.** 115 – The control devices and closed vent systems at this facility are not used to comply with the requirements of this rule; therefore, the facility is not subject to the requirements of this rule. 116 – This facility will have equipment leaks and fugitive emissions. Thus, the owner will comply with this regulation. **Existing Unit: FUG**

State Regulation Citation	Title	Applies? Enter Yes or No	Unit(s) or Facility	Justification: (You may delete instructions or statements that do not apply in the justification column to shorten the document.)
				117 – This facility is a central tank battery distribution point. Thus, the facility is not subject to this rule. 118 – There are no glycol dehydrators at this facility. Thus, this regulation is not applicable to the facility. 119 – Heaters have maximum capacity greater than 20 MMBtu/hr at this facility. Thus, this facility is subject to this subpart. **Existing Units: SHTR1-8, CHTR1-4, and RHTR1-4.** 120 – This facility trucks out slop oil more than 13 times a year and is therefore subject to this subpart. **Existing Unit: SOTL** 121 – This facility does not have pig launching and receiving. Therefore, this facility is not subject to this subpart. 122 – This facility uses compressed-gas pneumatic controllers. There is no drive gas emission at this facility. Thus, the regulation does not apply to this facility. 123 – The oil storage tanks and produced water tanks have greater than 3 tpy maximum allowable VOC emissions. Thus, it is subject to this subpart. **Existing units: IFR1-8, and PWTK1-2. New units: IFR9-14** 124 – This facility is a central tank battery distribution point. Thus, the facility is not subject to this rule. 126 – This facility does not contain a produced water management unit. Thus, the facility is not subject to this subpart. 127 – This facility is a central tank battery distribution point. Thus, the facility is not subject to this rule.
20.2.61.109 NMAC	Smoke & Visible Emissions	Yes	SHTR1-8, CHTR1-4, RHTR1-4, FL1-3, ECD1, TO1-4, GEN1-4	This regulation that limits opacity to 20% applies to Stationary Combustion Equipment, such as engines, boilers, heaters, and flares unless your equipment is subject to another state regulation that limits particulate matter such as 20.2.19 NMAC (see 20.2.61.109 NMAC). The facility will comply with this regulation.
20.2.70 NMAC	Operating Permits	Yes	Facility	This regulation establishes requirements for obtaining an operating permit. The facility is a major source for NOx, CO, VOC, and SO_2. The facility has a Title V operating permit P-297 to meet the requirements of this regulation.
20.2.71 NMAC	Operating Permit Fees	Yes	Facility	This regulation establishes a schedule of operating permit emission fees. The facility is subject to 20.2.70 NMAC and is therefore subject to requirements of this regulation. The facility will meet all fee requirements under 20.2.71.110 NMAC.
20.2.72 NMAC	Construction Permits	Yes	Facility	This regulation establishes the requirements for obtaining a construction permit. The facility is a stationary source that has potential emission rates greater than 10 pounds per hour or 25 tons per year of any regulated air contaminant for which there is a National or New Mexico Air Quality Standard. The facility has a construction permit (NSR Permit) 7877M1 to meet the requirements of this regulation.
20.2.73 NMAC	NOI & Emissions Inventory Requirements	Yes	Facility	This regulation establishes emission inventory requirements. The facility meets the applicability requirements of 20.2.73.300 NMAC. The facility will meet reporting all applicable reporting requirements under 20.2.73.300.B.1 NMAC.

State Regulation Citation	Title	Applies? Enter Yes or No	Unit(s) or Facility	Justification: (You may delete instructions or statements that do not apply in the justification column to shorten the document.)
20.2.74 NMAC	Permits – Prevention of Significant Deterioration (PSD)	No	N/A	The facility does not meet the threshold value for a major PSD source. Thus, the regulation does not apply to this facility.
20.2.75 NMAC	Construction Permit Fees	Construction Permit Fees	Yes	This regulation establishes a schedule of operating permit emission fees. This facility is currently permitted under NSR #7877M1. This regulation applies to this facility and the owner will comply with this regulation.
20.2.77 NMAC	New Source Performance	Yes	GEN1-4, IFR1-14, SHTR1-8, CHTR1-4, RHTR1-4, FUG, EOOSCOMP1-7, ECOSCOMP1-7, ERESCOMP1-18, AU1-4	This regulation establishes state authority to implement new source performance standards (NSPS) for stationary sources, as amended through January 15, 2017. • GEN1-4 are subject to 40 CFR 60, Subpart JJJJ. • IFR1-14 are subject to 40 CFR 60, Subpart Kb. IFR9-14 will be subject to 40 CFR, Subpart Kc once the regulation is promulgated. • SHTR1-8, CHTR1-4, and RHTR1-4 are subject to 40 CFR 60, Subpart Dc. • FUG, EOOSCOMP1-7, ECOSCOMP1-7, ERESCOMP1-18, and AU1-4 are subject to 40 CFR 60, Subpart OOOOa
20.2.78 NMAC	Emission Standards for HAPS	No	Units Subject to 40 CFR 61	This regulation establishes state authority to implement emission standards for hazardous air pollutants subject to 40 CFR Part 61. This facility does not emit hazardous air pollutants which are subject to the requirements of 40 CFR Part 61 and is therefore not subject to this regulation.
20.2.79 NMAC	Permits – Nonattainment Areas	No	N/A	This regulation establishes the requirements for obtaining a nonattainment area permit. The facility is not located in a non-attainment area and therefore is not subject to this regulation.
20.2.80 NMAC	Stack Heights	No	N/A	This regulation establishes requirements for the evaluation of stack heights and other dispersion techniques. This regulation does not apply as all stacks at the facility follow good engineering practices.
20.2.82 NMAC	MACT Standards for source categories of HAPS	Yes	GEN1-4	This regulation established state authority to implement MACT Standards for source categories of HAPs. The facility is a major source of HAPs and four (4) emergency generators (Units: GEN1-4) are subject to 40 CFR 63 Subpart ZZZZ. Thus, this regulation applies to this facility.

Table for Applicable Federal Regulations:

Federal Regulation Citation	Title	Applies? Enter Yes or No	Unit(s) or Facility	Justification:
40 CFR 50	NAAQS	Yes	Facility	This regulation defines national ambient air quality standards. The facility meets all applicable national ambient air quality standards for NOx, CO, SO_2, H_2S, PM_{10}, and $PM_{2.5}$ under this regulation.
NSPS 40 CFR 60, Subpart A	General Provisions	Yes	GEN1-4, IFR1-14, SHTR1-8, CHTR1-4, RHTR1-4, FUG,	This regulation establishes state authority to implement new source performance standards (NSPS) for stationary sources, as amended through January 15, 2017. • GEN1-4 are subject to 40 CFR 60, Subpart JJJJ. • IFR1-14 are subject to 40 CFR 60, Subpart Kb. • SHTR1-8, CHTR1-4, RHTR1-4 are subject to 40 CFR 60, Subpart Dc.

Federal Regulation Citation	Title	Applies? Enter Yes or No	Unit(s) or Facility	Justification:
			EOOSCOMP1-7, ECOSCOMP1-7, ERESCOMP1-18, AU1-4	FUG, EOOSCOMP1-7, ECOSCOMP1-7, ERESCOMP1-18, and AU1-4 are subject to 40 CFR 60, Subpart OOOOa
NSPS 40 CFR60.40a, Subpart Da	Subpart Da, Performance Standards for **Electric Utility Steam Generating Units**	No	N/A	This regulation establishes standards of performance for electric utility steam generating units. This regulation does not apply because the facility does not operate any electric utility steam generating units.
NSPS 40 CFR60.40b Subpart Db	**Electric Utility Steam Generating Units**	No	N/A	This regulation establishes standards of performance for industrial-commercial-institutional steam generating units. This regulation does not apply because the facility does not operate any industrial-commercial-institutional steam generating units with a heat capacity greater than 100 MMBtu/hr.
40 CFR 60.40c, Subpart Dc	Standards of Performance for Small Industrial-Commercial-Institutional Steam Generating Units	Yes	SHTR1-8, RHTRI1-4, CHTR 1-4	The heaters have an input rating greater than 10 MMBtu/hr and are subject per §60.40c(a). Since the units burn only natural gas, there are no applicable control, monitoring, or reporting requirements. Only fuel use records are required per §60.48c(g).
NSPS 40 CFR 60, Subpart Ka	Standards of Performance for **Storage Vessels for Petroleum Liquids** for which Construction, Reconstruction, or Modification Commenced After May 18, 1978, and **Prior** to July 23, 1984	No	N/A	This regulation establishes performance standards for storage vessels for petroleum liquids for which construction, reconstruction, or modification commenced after May 18, 1978, and prior to July 23, 1984. The facility was not constructed prior to July 23, 1984. Thus, this rule does not apply to this facility.
NSPS 40 CFR 60, Subpart Kb	Standards of Performance for **Volatile Organic Liquid Storage Vessels** (Including Petroleum Liquid Storage Vessels) for Which Construction, Reconstruction, or Modification Commenced **After** July 23, 1984	Yes	IFR1-14	This regulation establishes performance standards for volatile organic liquid storage vessels (including petroleum liquid storage vessels) for which construction, reconstruction, or modification commenced after July 23, 1984. The hydrocarbons are stored prior to custody transfer with a storage volume greater than or equal to 75 cubic meters; therefore, the exemption in §60.110b(d) no longer applies. The tanks use internal floating roof tanks to comply with the control requirements. Please note that IFR9-14 will be subject to 40 CFR 60, Subpart Kc when the regulation (NSPS Kc) is promulgated.

Federal Regulation Citation	Title	Applies? Enter Yes or No	Unit(s) or Facility	Justification:
NSPS 40 CFR 60.330 Subpart GG	**Stationary Gas Turbines**	No	N/A	The facility does not have any applicable units. Therefore, the facility is not subject to this regulation.
NSPS 40 CFR 60, Subpart KKK	Leaks of VOC from **Onshore Gas Plants**	No	N/A	This regulation defines standards of performance for equipment leaks of VOC emissions from onshore natural gas processing plants for which construction, reconstruction, or modification commenced after January 20, 1984, and on or before August 23, 2011. The was constructed after August 23, 2011. Therefore, this regulation does not apply to this facility.
NSPS 40 CFR Part 60 Subpart LLL	Standards of Performance for **Onshore Natural Gas Processing**: SO_2 Emissions	No	N/A	This regulation establishes standards of performance for SO_2 emissions from onshore natural gas processing for which construction, reconstruction, or modification of the amine sweetening unit commenced after January 20, 1984, and on or before August 23, 2011. The facility is not subject to this regulation as the amine sweetening unit was constructed after August 23, 2011.
NSPS 40 CFR Part 60 Subpart OOOO	Standards of Performance for Crude Oil and Natural Gas Production, Transmission, and Distribution for which construction, modification or reconstruction commenced after August 23, 2011 and before September 18, 2015	No	N/A	The rule applies to "affected" facilities that are constructed, modified, or reconstructed after Aug 23, 2011 (40 CFR 60.5365): gas wells, including fractured and hydraulically refractured wells, centrifugal compressors, reciprocating compressors, pneumatic controllers, certain equipment at natural gas processing plants, sweetening units at natural gas processing plants, and storage vessels. The facility is not subject to this regulation as the facility was constructed after September 18, 2015.
NSPS 40 CFR Part 60 Subpart OOOOa	Standards of Performance for Crude Oil and Natural Gas Facilities for which Construction, Modification or Reconstruction Commenced **After** September 18, 2015	Yes	FUG, EOOSCOMP1-7, ECOSCOMP1-7, ERESCOMP1-18, AU1-4	The electric drive centrifugal compressors for regen gas are exempt from §60.5365a(b) since they all use dry seals. The electric drive screw compressors for the refrigeration gas and instrument air are exempt from the definition of centrifugal compressor per §60.5430a. The reciprocating compressors used for oil stabilization gas, condensate stabilization gas, and residue gas air are subject to rule per from §60.5365a(c). All storage tanks were constructed after the applicability date of the rule; however, since emissions will be limited by permit to less than 6 tpy, all tanks IFR1-IFR8 are exempt per §60.5365a(e). IFR9-IFR14 has not been constructed yet. Therefore, NSPS OOOOa does not apply for IFR9-IFR14 tanks. The site uses compressed air for pneumatic controllers. The site will be subject to leak monitoring from fugitive components per §60.5365a(f). Since the sweetening units process less than 2 lt/d of sulfur, they are exempt from §60.5365a(g).
NSPS 40 CFR 60 Subpart IIII	Standards of performance for Stationary Compression Ignition Internal Combustion Engines	No	N/A	This regulation establishes standards of performance for stationary compression ignition combustion engines. The engines at this facility are not compression ignition combustion engines. This regulation does not apply.
NSPS	Standards of Performance for Stationary Spark Ignition Internal	Yes	GEN1-4	This regulation establishes standards of performance for stationary spark ignition combustion engines. Emergency generators (Units: GEN1-4) are subject to this regulation.

Federal Regulation Citation	Title	Applies? Enter Yes or No	Unit(s) or Facility	Justification:
40 CFR Part 60 Subpart JJJJ	Combustion Engines			
NSPS 40 CFR 60 Subpart TTTT	Standards of Performance for Greenhouse Gas Emissions for Electric Generating Units	No	N/A	This regulation establishes standards of performance for greenhouse gas emissions for electric generating units. This facility does not have electric generating units. This regulation does not apply.
NSPS 40 CFR 60 Subpart UUUU	Emissions Guidelines for Greenhouse Gas Emissions and Compliance Times for Electric Utility Generating Units	No	N/A	This regulation establishes emissions guidelines for greenhouse gas emissions and compliance times for electric generating units. This facility does not have electric generating units. This regulation does not apply.
NSPS 40 CFR 60, Subparts WWW, XXX, Cc, and Cf	Standards of performance for Municipal Solid Waste (MSW) Landfills	No	N/A	This facility is not a municipal solid waste landfill. This regulation does not apply.
NESHAP 40 CFR 61 Subpart A	General Provisions	No	Units Subject to 40 CFR 61	NSPS 40 CFR 61 does not apply to the facility because the facility does not emit or have the triggering substances on site and/or the facility is not involved in the triggering activity. The facility is not subject to this regulation. None of the subparts of Part 61 apply to the facility.
NESHAP 40 CFR 61 Subpart E	National Emission Standards for **Mercury**	No	N/A	The provisions of this subpart are applicable to those stationary sources which process mercury ore to recover mercury, use mercury chlor-alkali cells to produce chlorine gas and alkali metal hydroxide, and incinerate or dry wastewater treatment plant sludge
NESHAP 40 CFR 61 Subpart V	National Emission Standards for **Equipment Leaks** (Fugitive Emission Sources)	No	N/A	This regulation establishes national emission standards for equipment leaks (fugitive emission sources). The facility does not have equipment that operates in volatile hazardous air pollutant (VHAP) service [40 CFR Part 61.240]. The regulated activities subject to this regulation do not take place at this facility. The facility is not subject to this regulation.
MACT 40 CFR 63, Subpart A	General Provisions	Yes	GEN1-4	This regulation defines general provisions for relevant standards that have been set under this part. The facility is subject to this regulation because 40 CFR Part 63 Subpart ZZZZ applies to emergency generators (Units: GEN1-4).
MACT 40 CFR 63.760 Subpart HH	**Oil and Natural Gas Production Facilities**	No	N/A	This regulation establishes national emission standards for hazardous air pollutants from oil and natural gas production facilities. As a major source of HAP, sources subject to HH include storage vessels with flash emissions, fugitive components, and compressors in VHAP service ((see §63.760(b)(1)(ii), (iii), and (iv)). Fugitives and compressors are exempt per §63.769(b) since they are subject to NSPS OOOOa. Storage vessels use a closed vent system connected to a combustor to comply with §63.766(b). The facility does not have any affected units under this regulation.
MACT 40 CFR 63 Subpart HHH	National Emission Standards for Hazardous Air Pollutants From Natural Gas Transmission and Storage Facilities	No	N/A	This regulation establishes national emission standards for hazardous air pollutants from natural gas transmission and storage facilities. This regulation does not apply because this facility is not a natural gas transmission or storage facility as defined in this regulation [40 CFR Part 63.1270(a)].
MACT 40 CFR 63 Subpart DDDDD	National Emission Standards for Hazardous Air	No	N/A	This regulation establishes national emission standards for a major source of HAPs for industrial, commercial, and institutional boilers and process heaters.

Federal Regulation Citation	Title	Applies? Enter Yes or No	Unit(s) or Facility	Justification:
	Pollutants for Major Industrial, Commercial, and Institutional Boilers & Process Heaters			This facility is not a major source of HAPs. Therefore, this regulation does not apply to this facility.
MACT 40 CFR 63 Subpart UUUUU	National Emission Standards for Hazardous Air Pollutants Coal & Oil Fire Electric Utility Steam Generating Unit	No	N/A	This regulation establishes national emission standards for hazardous air pollutants from coal and oil-fired electric utility steam generating units. The facility does not contain the affected units. This regulation does not apply.
MACT 40 CFR 63 Subpart ZZZZ	National Emissions Standards for Hazardous Air Pollutants for Stationary Reciprocating Internal Combustion Engines (**RICE MACT**)	Yes	GEN1-4	This regulation defines national emissions standards for HAPs from stationary reciprocating Internal Combustion Engines. The emergency generators (Units: GEN1-4) are subject to MACT ZZZZ and comply by following the requirements of NSPS JJJJ.
40 CFR 64	**Compliance Assurance Monitoring**	Yes	AU1-4	This regulation defines compliance assurance monitoring. Amine sweeteners (Units: AU1-4) are subject to CAM to demonstrate continuous compliance with the control limits. These units use a control device(s) (TO1-4) to achieve compliance with such emission limitations.
40 CFR 68	**Chemical Accident Prevention**	No	N/A	This regulation does not apply to this facility because the facility does not store more than the regulated quantity of regulated substances.
Title IV – Acid Rain 40 CFR 72	**Acid Rain**	No	N/A	This part establishes the acid rain program. This part does not apply because the facility is not covered by this regulation [40 CFR Part 72.6].
Title IV – Acid Rain 40 CFR 73	**Sulfur Dioxide** Allowance Emissions	No	N/A	This regulation establishes sulfur dioxide allowance emissions for certain types of facilities. This part does not apply because the facility is not the type covered by this regulation [40 CFR Part 73.2].
Title IV-Acid Rain 40 CFR 75	**Continuous Emissions Monitoring**	No	N/A	The provisions of this part apply to each affected unit subject to Acid Rain emission limitations or reduction requirements for SO_2 or NO_X. The facility is not an acid rain source and is therefore not subject to this application.
Title IV – Acid Rain 40 CFR 76	**Acid Rain** Nitrogen Oxides **Emission Reduction Program**	No	N/A	This regulation establishes an acid rain nitrogen oxide emission reduction program. This regulation applies to each coal-fired utility unit that is subject to an acid rain emissions limitation or reduction requirement for SO_2. This part does not apply because the facility does not operate any coal-fired units [40 CFR Part 76.1].
Title VI – 40 CFR 82	Protection of **Stratospheric Ozone**	No	N/A	This regulation establishes a regulation for the protection of the stratospheric ozone. The regulation is not applicable because the facility does not "service", "maintain" or "repair" class I or class II appliances nor "dispose" of the appliances [40 CFR Part 82.1(a)].

Section 14

Operational Plan to Mitigate Emissions

(Submitting under 20.2.70, 20.2.72, 20.2.74 NMAC)

☐ **Title V Sources** (20.2.70 NMAC)**:** By checking this box and certifying this application the permittee certifies that it has developed an **Operational Plan to Mitigate Emissions During Startups, Shutdowns, and Emergencies** defining the measures to be taken to mitigate source emissions during startups, shutdowns, and emergencies as required by 20.2.70.300.D.5(f) and (g) NMAC. This plan shall be kept on site to be made available to the Department upon request. This plan should not be submitted with this application.

☒ **NSR** (20.2.72 NMAC)**, PSD** (20.2.74 NMAC) **& Nonattainment** (20.2.79 NMAC) **Sources:** By checking this box and certifying this application the permittee certifies that it has developed an **Operational Plan to Mitigate Source Emissions During Malfunction, Startup, or Shutdown** defining the measures to be taken to mitigate source emissions during malfunction, startup, or shutdown as required by 20.2.72.203.A.5 NMAC. This plan shall be kept on site to be made available to the Department upon request. This plan should not be submitted with this application.

☒ **Title V** (20.2.70 NMAC)**, NSR** (20.2.72 NMAC)**, PSD** (20.2.74 NMAC) **& Nonattainment** (20.2.79 NMAC) **Sources:** By checking this box and certifying this application the permittee certifies that it has established and implemented a Plan to Minimize Emissions During Routine or Predictable Startup, Shutdown, and Scheduled Maintenance through work practice standards and good air pollution control practices as required by 20.2.7.14.A and B NMAC. This plan shall be kept on site or at the nearest field office to be made available to the Department upon request. This plan should not be submitted with this application.

Startup and shutdown procedures are either based on the manufacturer's recommendations or based on XTO Energy's experience with specific equipment. These procedures are designed to proactively address the potential for malfunction to the greatest extent possible. These procedures dictate a sequence of operations that are designed to minimize emissions from the facility during events that result in shutdown and subsequent startup.

Equipment located at this facility is equipped with various safety devices and features that aid in the prevention of excess emissions in the event of an operational emergency. If an operational emergency does occur and excess emissions occur, XTO Energy will submit the required Excess Emissions Report as per 20.2.7 NMAC. Corrective action to eliminate the excess emissions and prevent recurrence in the future will be undertaken as quickly as safety allows.

Section 15

Alternative Operating Scenarios

(Submitting under 20.2.70, 20.2.72, 20.2.74 NMAC)

Alternative Operating Scenarios: Provide all information required by the department to define alternative operating scenarios. This includes process, material and product changes; facility emissions information; air pollution control equipment requirements; any applicable requirements; monitoring, recordkeeping, and reporting requirements; and compliance certification requirements. Please ensure applicable Tables in this application are clearly marked to show alternative operating scenario.

Construction Scenarios: When a permit is modified authorizing new construction to an existing facility, NMED includes a condition to clearly address which permit condition(s) (from the previous permit and the new permit) govern during the interval between the date of issuance of the modification permit and the completion of construction of the modification(s). There are many possible variables that need to be addressed such as: Is simultaneous operation of the old and new units permitted and, if so for example, for how long and under what restraints? In general, these types of requirements will be addressed in Section A100 of the permit, but additional requirements may be added elsewhere. Look in A100 of our NSR and/or TV permit template for sample language dealing with these requirements. Find these permit templates at: www.env.nm.gov/air-quality/permitting-section-procedures-and-guidance/. Compliance with standards must be maintained during construction, which should not usually be a problem unless simultaneous operation of old and new equipment is requested.

In this section, under the bolded title "Construction Scenarios", specify any information necessary to write these conditions, such as: conservative-realistic estimated time for completion of construction of the various units, whether simultaneous operation of old and new units is being requested (and, if so, modeled), whether the old units will be removed or decommissioned, any PSD ramifications, any temporary limits requested during phased construction, whether any increase in emissions is being requested as SSM emissions or will instead be handled as a separate Construction Scenario (with corresponding emission limits and conditions, etc.

XTO Energy is not proposing any alternative operating scenarios for this facility.

Section 16

Air Dispersion Modeling

1) Minor Source Construction (20.2.72 NMAC) and Prevention of Significant Deterioration (PSD) (20.2.74 NMAC) ambient impact analysis (modeling): Provide an ambient impact analysis as required at 20.2.72.203.A(4) and/or 20.2.74.303 NMAC and as outlined in the Air Quality Bureau's Dispersion Modeling Guidelines found on the Planning Section's modeling website. If air dispersion modeling has been waived for one or more pollutants, attach the AQB Modeling Section modeling waiver approval documentation.
2) SSM Modeling: Applicants must conduct dispersion modeling for the total short term emissions during routine or predictable startup, shutdown, or maintenance (SSM) using realistic worst case scenarios following guidance from the Air Quality Bureau's dispersion modeling section. Refer to "Guidance for Submittal of Startup, Shutdown, Maintenance Emissions in Permit Applications (http://www.env.nm.gov/aqb/permit/app_form.html) for more detailed instructions on SSM emissions modeling requirements.
3) Title V (20.2.70 NMAC) ambient impact analysis: Title V applications must specify the construction permit and/or Title V Permit number(s) for which air quality dispersion modeling was last approved. Facilities that have only a Title V permit, such as landfills and air curtain incinerators, are subject to the same modeling required for preconstruction permits required by 20.2.72 and 20.2.74 NMAC.

What is the purpose of this application?	Enter an X for each purpose that applies
New PSD major source or PSD major modification (20.2.74 NMAC). See #1 above.	
New Minor Source or significant permit revision under 20.2.72 NMAC (20.2.72.219.D NMAC). See #1 above. **Note:** Neither modeling nor a modeling waiver is required for VOC emissions.	X
Reporting existing pollutants that were not previously reported.	
Reporting existing pollutants where the ambient impact is being addressed for the first time.	
Title V application (new, renewal, significant, or minor modification. 20.2.70 NMAC). See #3 above.	
Relocation (20.2.72.202.B.4 or 72.202.D.3.c NMAC)	
Minor Source Technical Permit Revision 20.2.72.219.B.1.d.vi NMAC for like-kind unit replacements.	
Other: i.e. SSM modeling. See #2 above.	
This application does not require modeling since this is a No Permit Required (NPR) application.	
This application does not require modeling since this is a Notice of Intent (NOI) application (20.2.73 NMAC).	
This application does not require modeling according to 20.2.70.7.E(11), 20.2.72.203.A(4), 20.2.74.303, 20.2.79.109.D NMAC and in accordance with the Air Quality Bureau's Modeling Guidelines.	

Check each box that applies:

☒ See attached, approved modeling **waiver for all** pollutants from the facility.

☐ See attached, approved modeling **waiver for some** pollutants from the facility.

☐ Attached in Universal Application Form 4 (UA4) is a **modeling report for all** pollutants from the facility.

☐ Attached in UA4 is a **modeling report for some** pollutants from the facility.

☐ No modeling is required.

Mingcheng Ren

From: Peters, Eric, ENV <eric.peters@env.nm.gov>
Sent: Thursday, October 26, 2023 5:14 PM
To: Adam Erenstein
Cc: james.barron@exxonmobil.com; Mustafa, Sufi A., ENV
Subject: RE: [EXTERNAL] XTO Cowboy CDP - Modeling Waiver
Attachments: 7877M1_Cowboy CDP_Modeling Waiver_1026-2023.pdf

Hi Adam,

The approved modeling waiver for Cowboy CDP is a. ached.

Eric

Eric Peters, Air Dispersion Modeler
New Mexico Environment Department / Air Quality Bureau
525 Camino de Los Marquez - Suite 1 / Santa Fe, NM, 87505
Phone: 505-629-5299
E-mail: eric.peters@env.nm.gov
www.env.nm.gov

From: Adam Erenstein <AErenstein@trinityconsultants.com>
Sent: Thursday, October 26, 2023 1:59 PM
To: Peters, Eric, ENV <eric.peters@env.nm.gov>
Cc: james.barron@exxonmobil.com; Mustafa, Sufi A., ENV <sufi.mustafa@env.nm.gov>
Subject: [EXTERNAL] XTO Cowboy CDP - Modeling Waiver

CAUTION: This email originated outside of our organization. Exercise caution prior to clicking on links or opening attachments.

Hi Eric,
Attached is the modeling waiver for XTO's Cowboy CDP for your review. Please contact me if you have any questions.

Regards,

Adam Erenstein
Principal Consultant, Manager of Consulting Services

P 505.266.6611 M 480.760.3860
NEW ADDRESS: 9400 Holly Avenue NE, Building 3, Suite B, Albuquerque, NM 87122
Email: aerenstein@trinityconsultants.com

Connect with us: LinkedIn / Facebook / Twitter / YouTube / trinityconsultants.com

Stay current on environmental issues. Subscribe today to receive Trinity's free *EHS Quarterly*.

New Mexico Environment Department
Air Quality Bureau
Modeling Section
525 Camino de Los Marquez - Suite 1
Santa Fe, NM 87505

Phone: (505) 476-4300
Fax: (505) 476-4375
www.env.nm.gov/air-quality/

For Department use only:

Approved by: Eric Peters

Date: October 26, 2023

Air Dispersion Modeling Waiver Request Form

This form must be completed and submitted with all air dispersion modeling waiver requests.

If an air permit application requires air dispersion modeling, in some cases the demonstration that ambient air quality standards and Prevention of Significant Deterioration (PSD) increments will not be violated can be satisfied with a discussion of previous modeling. The purpose of this form is to document and streamline requests to certify that previous modeling satisfies all or some of the current modeling requirements. The criteria for requesting and approving modeling waivers are found in the Air Quality Bureau Modeling Guidelines. Typically, only construction permit applications submitted per 20.2.72, 20.2.74, or 20.2.79 NMAC require air dispersion modeling. However, modeling is sometimes also required for a Title V permit application.

A waiver may be requested by e-mailing this completed form in **MS Word** format to the modeling manager, sufi.mustafa@env.nm.gov.

This modeling waiver is not valid if the emission rates in the application are higher than those listed in the approved waiver request.

Section 1 and Table 1: Contact and facility information:

Contact name	Adam Erenstein
E-mail Address:	aerenstein@trinityconsultants.com
Phone	(505) 266-6611
Facility Name	Cowboy Central Delivery Point (CDP)
Air Quality Permit Number(s)	7877M1
Agency Interest Number (if known)	38481
Latitude and longitude of facility (decimal degrees)	32.160000, -103.841667

General Comments: (Add introductory remarks or comments here, including the purpose of and type of permit application.)

XTO Energy Inc. is requesting a Significant Revision of Cowboy Central Delivery Point (Cowboy CDP) NSR Permit #7877M1 in accordance with 20.2.72.219.D(1) NMAC. The facility is located approximately 14 miles southeast of Malaga in Eddy County, New Mexico.

The central delivery point portion of the facility will receive up to 600,000 barrels of oil per day from surrounding field production batteries. The facility has storage tanks for storing the processed oil and NGLs. The oil and NGLs are transferred offsite via pipelines, while water and slop oil can be transported offsite by truck.

One of the modeling-related modifications in this application: XTO is requesting to include the backup flare unit's (FL-3) pilot and purge gas emissions in the emission calculation. FL-3 is one of the three flares at the facility that controls the SSM activities.

Section 2 – List All Regulated Pollutants from the Entire Facility - Required

In Table 2, below, list all regulated air pollutants emitted from your facility, except for New Mexico Toxic Air Pollutants, which are listed in Table 6 of this form. All pollutants emitted from the facility must be listed whether or not a modeling waiver is requested for that pollutant or if the pollutant emission rate is subject to the proposed permit changes.

Table 2: Air Pollutant summary table (Check all that apply. Include all pollutants emitted by the facility):

Pollutant	Pollutant is not emitted at the facility and modeling or waiver are not required.	Pollutant does not increase in emission rate at any emission unit (based on levels currently in the permit) and stack parameters are unchanged. Modeling or waiver are not required.	Stack parameters or stack location has changed.	Pollutant is new to the permit, but already emitted at the facility.	Pollutant is increased at any emission unit (based on levels currently in the permit).	A modeling waiver is being requested for this pollutant.	Modeling for this pollutant will be included in the permit application.
CO					X	X	
NO_2					X	X	
SO_2					X	X	
PM10					X	X	
PM2.5					X	X	
H_2S		X					
Reduced S	X						
O_3 (PSD only)	X						
Pb	X						

Section 3: Pollutants, other than NMTAPs, with very small emission rates

The Air Quality Bureau has performed generic modeling to demonstrate that small sources, as listed in Appendix 2 of this form, do not need computer modeling. This modeling compared emissions from a project (the increase in emissions from the previous permit or total facility emissions for a new facility) with significance levels. After comparing the project's emission rates for various pollutants to Appendix 2, list in Table 3 the pollutants that do not need to be modeled because of very small emission rates.

The facility must be at least 2 km from the nearest Class I area to qualify for a waiver due to very small emission rates. List the nearest Class I area and the distance from the facility in Section 3 comments.

Section 3 Comments. (If you are not requesting a waiver for any pollutants based on their low emission rate, then note that here. You do not need to complete the rest of Section 3 or Table 3.)
<Add comments here>

Table 3: List of Pollutants with very small emission rates from the project

Pollutant	Requested Allowable Emission Rate for Project (pounds/hour)	Release Type (select "all from stacks >20 ft" or "other")	Waiver Threshold (from appendix 2) (lb/hr)
CO	1.36	all from stacks >20 ft	16.037
SO_2	0.060	all from stacks >20 ft	0.179
PM_{10}	0.040	all from stacks >20 ft	0.255
$PM_{2.5}$	0.040	all from stacks >20 ft	0.056

Section 4: Pollutants that have previously been modeled at equal or higher emission rates

List the pollutants and averaging periods in Table 4 for which you are requesting a modeling waiver based on previous modeling for this facility. The previous modeling reports that apply to the pollutant must be submitted with the modeling waiver request. Request previous modeling reports from the Modeling Section of the Air Quality Bureau if you do not have them and believe they exist in the AQB modeling file archive.

Section 4 Comments. (If you are not asking for a waiver based on previously modeled pollutants, note that here. You do not need to complete the rest of section 4 or table 4.)

<Add comments here>

Table 4: List of previously modeled pollutants (facility-wide emission rates)

Pollutant	Averaging period	Proposed emission rate (pounds/hour)	Previously modeled emission rate (pounds/hour)	Proposed minus modeled emissions (lb/hr)	Modeled percent of standard or increment	Year modeled
NO_2	1-hr NAAQS	58.41	57.73	0.68	85%	2021
NO_2	Annual NMAAQS	58.41	57.73	0.68	11%	2021
NO_2	Annual Class II	58.41	57.73	0.68	41%	2021
NO_2	Annual Class I SIL	58.41	57.73	0.68	16%	2021
CO	1-hr SIL	90.33	88.97	1.36	30%	2021
CO	8-hr SIL	90.33	88.97	1.36	86%	2021
SO_2	1-hr NAAQS	6.64	6.58	0.060	27.2	2021
SO_2	3-hr SIL	6.64	6.58	0.060	21%	2021
SO_2	24-hr SIL	6.64	6.58	0.060	58%	2021
SO_2	Annual SIL	6.64	6.58	0.060	52%	2021
PM_{10}	24-hr NAAQS	11.54	11.50	0.040	37%	2021
PM_{10}	24-hr Class II	11.54	11.50	0.040	61%	2021
PM_{10}	Annual Class II	11.54	11.50	0.040	30%	2021
PM_{10}	24-hr Class I	11.54	11.50	0.040	31%	2021
PM_{10}	Annual Class I	11.54	11.50	0.040	1%	2021
$PM_{2.5}$	24-hr NAAQS	10.91	10.87	0.040	53%	2021
$PM_{2.5}$	24-hr Class II	10.91	10.87	0.040	70%	2021
$PM_{2.5}$	Annual NAAQS	10.91	10.87	0.040	69%	2021
$PM_{2.5}$	Annual Class II	10.91	10.87	0.040	53%	2021
$PM_{2.5}$	24-hr Class I	10.91	10.87	0.040	65%	2021
$PM_{2.5}$	Annual Class I	10.91	10.87	0.040	8%	2021

Section 4, Table 5: Questions about previous modeling:

Question	Yes	No
Was AERMOD used to model the facility?	X	
Did previous modeling predict concentrations less than 95% of each air quality standard and PSD increment?	X	
Were all averaging periods modeled that apply to the pollutants listed above?	X	
Were all applicable startup/shutdown/maintenance scenarios modeled?	X	
Did modeling include all sources within 1000 meters of the facility fence line that now exist?	X	
Did modeling include background concentrations at least as high as current background concentrations?	X	
If a source is changing or being replaced, is the following equation true for all pollutants for which the waiver is requested? (Attach calculations if applicable.) EXISTING SOURCE REPLACMENT SOURCE $[(g) \times (h1)] + [(v1)^2/2] + [(c) \times (T1)] <= [(g) \times (h2)] + [(v2)^2/2] + [(c) \times (T2)]$		X

q1 q2 Where g = gravitational constant = 32.2 ft/sec^2 h1 = existing stack height, feet v1 = exhaust velocity, existing source, feet per second c = specific heat of exhaust, 0.28 BTU/lb-degree F T1 = absolute temperature of exhaust, existing source = degree F + 460 q1 = emission rate, existing source, lbs/hour h2 = replacement stack height, feet v2 = exhaust velocity, replacement source, feet per second T2 = absolute temperature of exhaust, replacement source = degree F + 460 q2 = emission rate, replacement source, lbs/hour		

If you checked "no" for any of the questions, provide an explanation for why you think the previous modeling may still be used to demonstrate compliance with current ambient air quality standards.

XTO is requesting to include the backup flare unit's (FL-3) pilot and purge gas emissions in the emission calculation. The FL-3 stack parameters will remain the same as previously modeled. CO, SO_2, PM_{10}, and $PM_{2.5}$ do not need to be modeled because of very small emission rate changes from the project. For NO_2, Section 5 presents the scaled percentages of ambient air quality standards and increments based on the previous modeling results and the proposed emission rates. The results of the analysis show that modeling is not required as the proposed emission rates will not significantly increase the ambient air quality impacts from the facility.

Section 5: Modeling waiver using scaled emission rates and scaled concentrations

At times it may be possible to scale the results of modeling one pollutant and apply that to another pollutant. Increases in emissions of one pollutant might also demonstrate compliance by applying a scaling factor to the modeling results. If the analysis for the waiver gets too complicated, then it becomes a modeling review rather than a modeling waiver, and applicable modeling fees will be charged for the modeling. Plume depletion, ozone chemical reaction modeling, post-processing, and unequal pollutant ratios from different sources are likely to invalidate scaling.

Below are scaled percentages of ambient air quality standards and increments based on the previous modeling results and the proposed emission rates. The results of the analysis show that modeling is not required as the proposed emission rates will not significantly increase the ambient air quality impacts from the facility.

Pollutant	Averaging period	Proposed emission rate (pounds/hour)	Previously modeled emission rate (pounds/hour)	Scaled Impact* (% of standard)	Modeled percent of standard or increment	Year modeled
NO_2	1-hr NAAQS	58.41	57.73	86.0%	85%	2021
NO_2	Annual NMAAQS	58.41	57.73	11.1%	11%	2021
NO_2	Annual Class II	58.41	57.73	41.5%	41%	2021
NO_2	Annual Class I SIL	58.41	57.73	16.2%	16%	2021
CO	1-hr SIL	90.33	88.97	30.5%	30%	2021
CO	8-hr SIL	90.33	88.97	87.3%	86%	2021
SO_2	1-hr NAAQS	6.64	6.58	27.4%	27.2%	2021
SO_2	3-hr SIL	6.64	6.58	21.2%	21%	2021
SO_2	24-hr SIL	6.64	6.58	58.5%	58%	2021
SO_2	Annual SIL	6.64	6.58	52.5%	52%	2021
PM_{10}	24-hr NAAQS	11.54	11.50	37.1%	37%	2021
PM_{10}	24-hr Class II	11.54	11.50	61.2%	61%	2021
PM_{10}	Annual Class II	11.54	11.50	30.1%	30%	2021
PM_{10}	24-hr Class I	11.54	11.50	31.1%	31%	2021

PM_{10}	Annual Class I	11.54	11.50	1.0%	1%	2021
$PM_{2.5}$	24-hr NAAQS	10.91	10.87	53.2%	53%	2021
$PM_{2.5}$	24-hr Class II	10.91	10.87	70.3%	70%	2021
$PM_{2.5}$	Annual NAAQS	10.91	10.87	69.3%	69%	2021
$PM_{2.5}$	Annual Class II	10.91	10.87	53.2%	53%	2021
$PM_{2.5}$	24-hr Class I	10.91	10.87	65.2%	65%	2021
$PM_{2.5}$	Annual Class I	10.91	10.87	8.0%	8%	2021

*Scaled Percent of Standard=Proposed Emission Rate (lb/hr) / Modeled Emission Rate (lb/hr) x Modeled Percent of Standard

If you are not scaling previous results, note that here. You do not need to complete the rest of section 5. Scaling analyses are not intended to be used for previously modeled pollutants with decreasing emissions, which is already addressed in section 4.

To demonstrate compliance with standards for a pollutant describe scenarios below that you wish the modeling section to consider for scaling results.

Section 6: New Mexico Toxic air pollutants – 20.2.72.400 NMAC

Modeling must be provided for any New Mexico Toxic Air Pollutant (NMTAP) with a facility-wide controlled emission rate in excess of the pound per hour emission levels specified in Tables A and B at **20.2.72.502 NMAC** - Toxic Air Pollutants and Emissions. An applicant may use a stack height correction factor based on the release height of the stack for the purpose of determining whether modeling is required. See Table C - Stack Height Correction Factor at 20.2.72.502 NMAC. Divide the emission rate for each release point of a NMTAP by the correction factor for that release height and add the total values together to determine the total adjusted pound per hour emission rate for that NMTAP. If the total adjusted pound per hour emission rate is lower than the emission rate screening level found in Tables A and B, then modeling is not required.

In Table 6, below, list the total facility-wide emission rates for each New Mexico Toxic Air Pollutant emitted by the facility. The table is pre-populated with common examples. Extra rows may be added for NMTAPS not listed or for NMTAPS emitted from multiple stack heights. NMTAPS not emitted at the facility may be deleted, left blank, or noted as 0 emission rate. Toxics previously modeled may be addressed in Section 5 of this waiver form. For convenience, we have listed the stack height correction factors in Appendix 1 of this form.

Section 6 Comments. (If you are not requesting a waiver for any NMTAPs then note that here. You do not need to complete the rest of section 6 or Table 6.)

N/A – Toxics modeling is not required for this facility.

Table 6: New Mexico Toxic Air Pollutants emitted at the facility

If requesting a waiver for any NMTAP, all NMTAPs from this facility must be listed in Table 3 regardless of if a modeling waiver is requested for that pollutant or if the pollutant emission rate is subject to the proposed permit changes.

Pollutant	Requested Allowable Emission Rate (pounds/hour)	Release Height (Meters)	Correction Factor	Allowable Emission Rate Divided by Correction Factor	Emission Rate Screening Level (pounds/hour)
Ammonia					1.20
Asphalt (petroleum) fumes					0.333
Carbon black					0.233
Chromium metal					0.0333
Glutaraldehyde					0.0467
Nickel Metal					0.0667
Wood dust (certain hard					0.0667

woods as beech & oak)					
Wood dust (soft wood)					0.333
(add additional toxics if they are present)					

Section 7: Approval or Disapproval of Modeling Waiver

The AQB air dispersion modeler should list each pollutant for which the modeling waiver is approved, the reasons why, and any other relevant information. If not approved, this area may be used to document that decision.

The modeling waiver is approved for CO, SO_2, NO_2, PM10, and PM2.5. Scaled results of previous modeling demonstrate that the new proposed emission rates will demonstrate compliance with air quality standards and PSD increments.

Appendix 1: Stack Height Release Correction Factor (adapted from 20.2.72.502 NMAC)

Release Height in Meters	Correction Factor
0 to 9.9	1
10 to 19.9	5
20 to 29.9	19
30 to 39.9	41
40 to 49.9	71
50 to 59.9	108
60 to 69.9	152
70 to 79.9	202
80 to 89.9	255
90 to 99.9	317
100 to 109.9	378
110 to 119.9	451
120 to 129.9	533
130 to 139.9	617
140 to 149.9	690
150 to 159.9	781
160 to 169.9	837
170 to 179.9	902
180 to 189.9	1002
190 to 199.9	1066
200 or greater	1161

Appendix 2. Very small emission rate modeling waiver requirements (updated 7/27/2023)
Modeling is waived if emissions of a pollutant for the project are below the amount:

Pollutant	If all emissions come from stacks 20 feet or greater in height and there are no horizontal stacks or raincaps (lb/hr)	If not all emissions come from stacks 20 feet or greater in height, or there are horizontal stacks, raincaps, volume, or area sources (lb/hr)
CO	16.037	2.580
H_2S (Pecos-Permian Basin)	0.114	0.015
H_2S (Not in Pecos-Permian Basin)	0.022	0.003
Lead	0.005	0.001
NO_2	0.189	0.024
PM2.5 – Point Sources	0.056	0.009
PM2.5 – Volume Sources		0.003
PM10 – Point Sources	0.255	0.039
PM10 – Volume Sources		0.015
SO_2	0.179	0.023
Reduced sulfur (Pecos-Permian Basin)	0.033	No waiver
Reduced sulfur (Not in Pecos-Permian Basin)	No waiver	No waiver

Section 17

Compliance Test History

(Submitting under 20.2.70, 20.2.72, 20.2.74 NMAC)

To show compliance with existing NSR permits conditions, you must submit a compliance test history. The table below provides an example.

No history of compliance testing.

Section 20

Other Relevant Information

Other relevant information. Use this attachment to clarify any part in the application that you think needs explaining. Reference the section, table, column, and/or field. Include any additional text, tables, calculations or clarifying information.

Additionally, the applicant may propose specific permit language for AQB consideration. In the case of a revision to an existing permit, the applicant should provide the old language and the new language in track changes format to highlight the proposed changes. If proposing language for a new facility or language for a new unit, submit the proposed operating condition(s), along with the associated monitoring, recordkeeping, and reporting conditions. In either case, please limit the proposed language to the affected portion of the permit.

No other relevant information is provided in this application.

Section 22: Certification

Company Name: XTO Energy, Inc

I, James Barron, hereby certify that the information and data submitted in this application are true and as accurate as possible, to the best of my knowledge and professional expertise and experience.

Signed this 3 day of November 2023, upon my oath or affirmation, before a notary of the State of Texas.

James Barron
*Signature

11/3/2023
Date

James Barron
Printed Name

Air Permit Advisor
Title

Scribed and sworn before me on this 3RD day of NOVEMBER, 2023.

My authorization as a notary of the State of TEXAS expires on the 3RD day of NOVEMBER, 2027.

Notary's Signature

NOVEMBER 3, 2023
Date

SAMUEL GRAY
Notary's Printed Name

SAMUEL GRAY
Notary Public, State of Texas
Comm. Expires 03-15-2025
Notary ID 132973727

*For Title V applications, the signature must be of the Responsible Official as defined in 20.2.70.7.AE NMAC.