CHAPTER 5: WASTEWATER TREATMENT PONDS

USE OF PONDS

Shallow ponds (3 to 5 feet) are often used to treat wastewater and other wastes instead of, or in addition to, conventional waste treatment processes. When discharged into ponds, wastes are treated or stabilized by several natural processes acting at the same time. Heavy solids settle to the bottom where they are decomposed by bacteria in suspension. Some wastewater is disposed of by evaporation from the pond surface.

Dissolved nutrient materials, such as nitrogen and phosphorus, are used by green algae which are actually microscopic plants floating and living in the water. The algae use carbon dioxide (CO_2) and bicarbonate to build body protoplasm. In so growing, they need nitrogen and phosphorus in their metabolism much as land plants do. Like land plants, they release oxygen and some carbon dioxide as waste products.

Ponds can serve as very effective treatment facilities. Extensive studies of their performance have led to a better understanding of the natural processes by which ponds treat wastes. Information is provided here on the natural processes and ways operators can regulate pond processes for efficient waste treatment.

HISTORY OF PONDS IN WASTE TREATMENT

The first wastewater collection systems in the ancient Orient and in ancient Europe discharged wastewater into nearby bodies of water. These systems accomplished their intended purpose until overloading, as in modern systems, made them objectionable.

The first ponds constructed in the United States were built for the purpose of keeping wastewaters from flowing into places where they would be objectionable. Once built, these ponds performed a treatment process that finally became recognized as such.

As a complete process, the ponding of wastewater offers many advantages for smaller installations. This is true provided that land is not costly and the location is isolated from residential, commercial, and recreational areas.

The advantages are that a pond:

1. Does not require expensive equipment
2. Does not require highly trained operation personnel
3. Is economical to construct
4. Provides treatment that is equal or superior to some conventional processes
5. Is adaptable to changing loads
6. Is adaptable to land application
7. Consumes little energy
8. Serves as a wildlife habitat
9. Has an increased potential design life
10. Has few sludge handling and disposal problems
11. Is probably the most trouble-free of any treatment process when used correctly, provided a consistently high quality effluent is not required

The limitations are that a pond:

1. May emit odors
2. Requires a large area of land
3. Treats wastes inconsistently depending on climatic conditions
4. May contaminate ground waters unless properly lined
5. May have high suspended solids levels in the effluent

Table 5.1

PURPOSE OF POND PARTS

Part	Purpose
Flowmeter	Measures and records flows into pond.
Bar Screen	Removes coarse material from pond influent.
Pond Inlets	Distribute influent in pond.
Pond Depth and Outlet Control	Regulates outflow from pond and depth of water in pond. Allows pond to be drained for cleaning and inspection.
Outlet Baffle	Prevents scum and other surface debris from flowing to next pond or receiving waters.
Dike or Levee	Separates ponds and holds wastewater being treated in ponds.
Transfer Line	Conveys wastewater from one pond to another.
Recirculation Line	Returns pond effluent rich in algae and oxygen from second pond to first pond for seeding, dilution and process control.
Chlorination	Applies chlorine to treated wastewater for disinfection purposes.
Chlorine Contact Basin	Provides contact time for chlorine to disinfect pond effluent.
Effluent Line	Conveys treated wastewater to receiving waters, to point of reuse (irrigation), or to land disposal site.

Reprinted, with permission, from *Operation of Wastewater Treatment Plants*, Vol. I, 2nd ed., Office of Water Programs, California State University, Sacramento Foundation

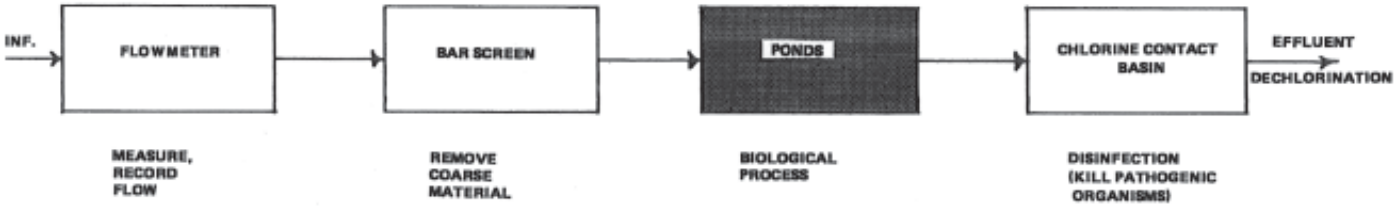

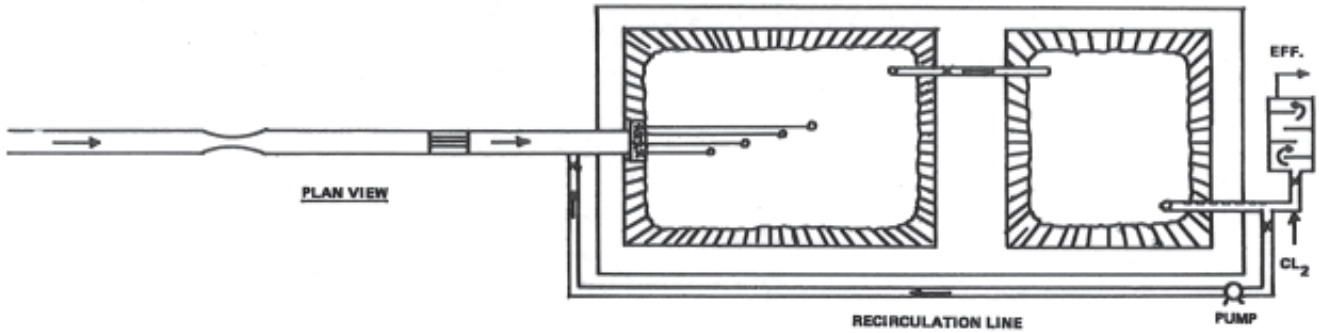

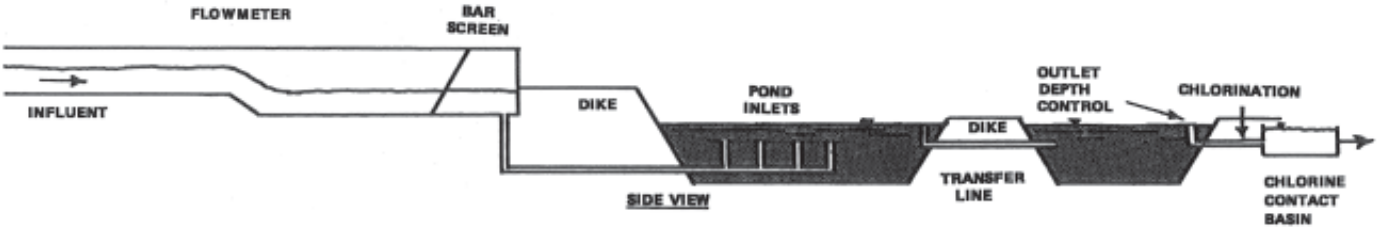

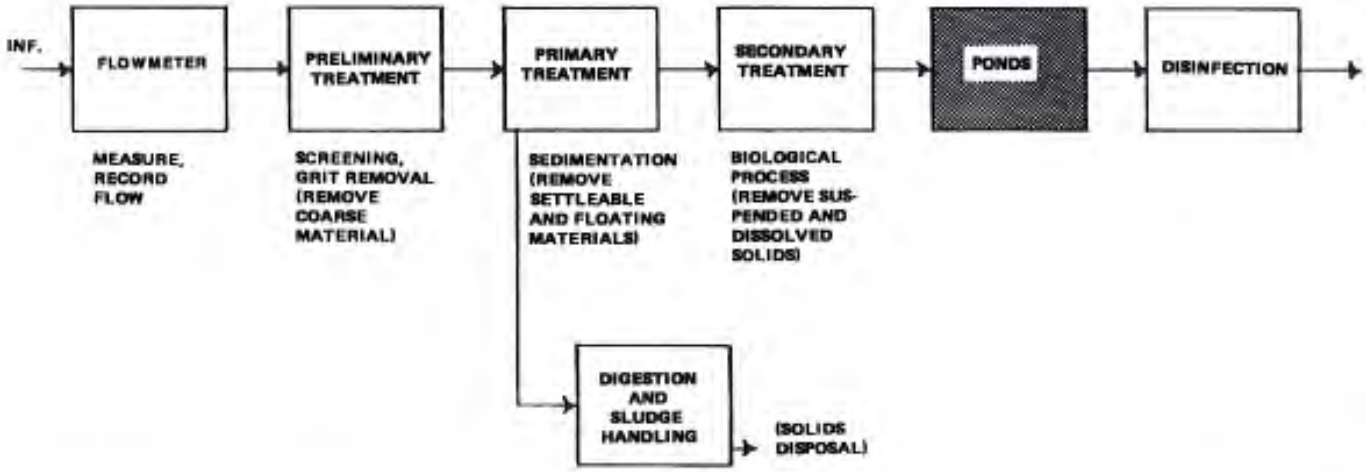

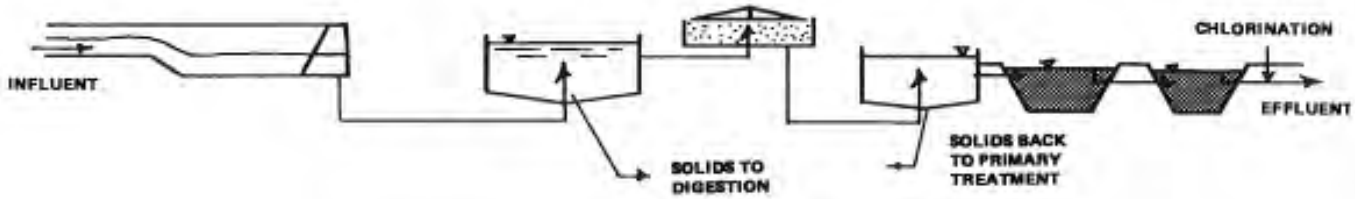

Reprinted, with permission, from *Operation of Wastewater Treatment Plants*, Vol. I, 4th ed., Office of Water Programs, California State University, Sacramento Foundation

Figure 5.1 - ***Schematics of Typical Pond Layouts***

Pond Classifications and Applications

Ponds are quite commonly used in series (one pond following another) after a primary wastewater treatment plant to provide additional clarification, BOD removal and disinfection. These ponds are sometimes called "oxidation ponds." Ponds are sometimes used in series after a trickling filter plant, thus giving a form of tertiary treatment. These are sometimes called "polishing ponds." Ponds placed in series with each other can provide a high quality effluent which is acceptable for discharge into most watercourses. If the detention time is long enough, many ponds can meet fecal coliform standards.

Series Operation

Series operation allows the most number of cells to be used in sequence and usually yield the best effluent quality. Series operation is recommended in the summer and fall when the biology is most developed and active.

Parallel Operation

Parallel operation is often used in the winter and spring periods in cold climates when treatment efficiency is reduced due to low temperature. Organic overloading and odor production may occur at cold temperature in series operation.

Pond Classification

A great many variations in ponds are possible due to differences in depth, operating conditions, and loadings. A bold line of distinction among different types of ponds is often impossible. Current literature generally uses three broad pond classifications: Aerobic, Anaerobic, and Facultative.

Aerobic Ponds are characterized by having dissolved oxygen distributed throughout their contents practically all of the time. They usually require an additional source of oxygen to supplement the rather minimal amount that can be diffused from the atmosphere at the water surface. Aerobic ponds are usually 3-5 feet deep with no aeration. The additional source of oxygen may be supplied by algae during daylight hours.

Anaerobic Ponds, as the name implies, usually are without any dissolved oxygen throughout their entire depth. Treatment depends on fermentation of the sludge at the pond bottom. This process can be quite odorous under certain conditions, but it is highly efficient in destroying organic wastes. Anaerobic ponds are mainly used for processing industrial wastes, although some domestic wastes ponds become anaerobic when they are badly overloaded. Anaerobic ponds are >14 feet in depth with an organic loading of 200-1000 lbs BOD_5 per acre per day.

Facultative Ponds are the most common type in current use. The name facultative refers to the type of bacteria that can live in both aerobic and anaerobic environments. The upper portion (supernatant) of these ponds is aerobic, while the bottom layer is anaerobic. Algae supply most of the oxygen to the supernatant. Facultative ponds are most common because it is almost impossible to maintain completely aerobic or anaerobic conditions all the time at all depths of the pond. Facultative ponds are 4-8 feet deep

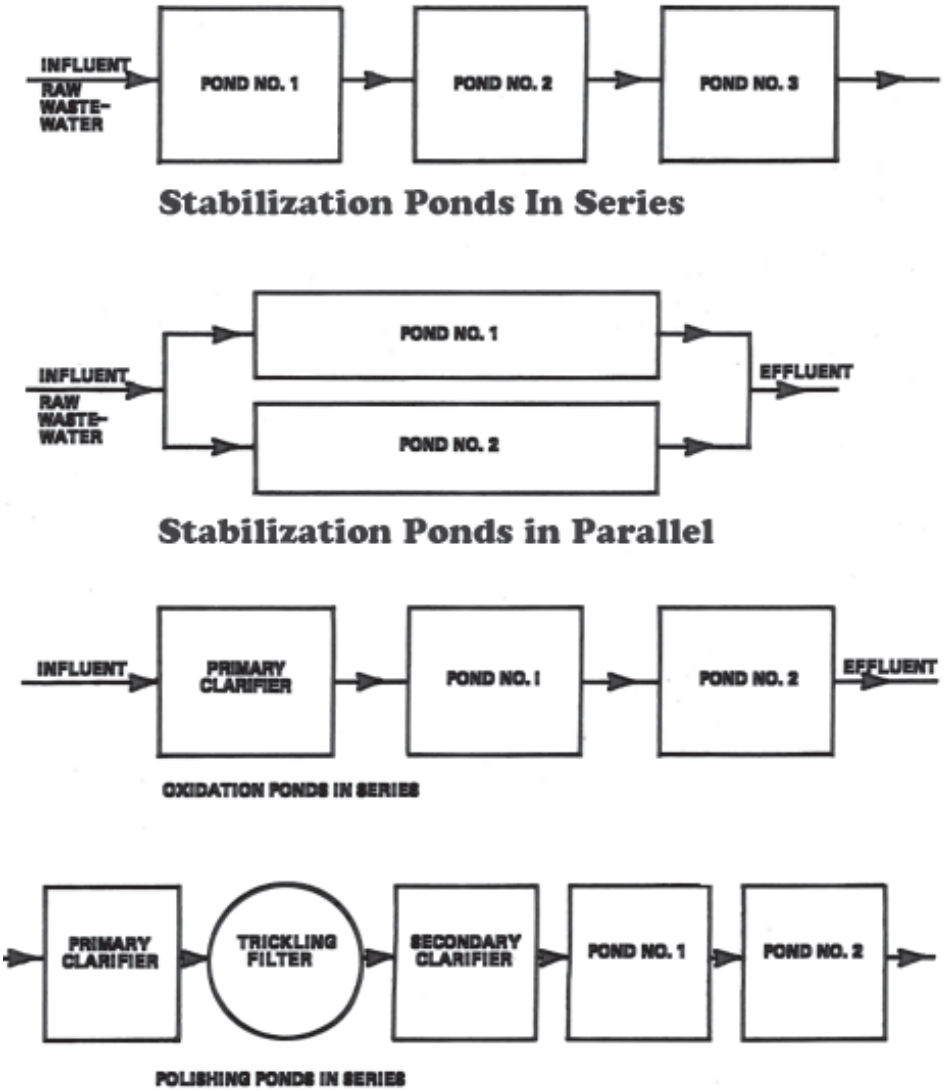

Figure 5.2 - *Pond Types*

Reprinted, with permission, from *Operation of Wastewater Treatment Plants*, Vol. I, 4th ed., Office of Water Programs, CSU, Sacramento Found.

with an organic loading of 15-50 lbs BOD_5 per acre per day.

Tertiary Ponds or polishing ponds have an organic loading of 5-15 lbs BOD_5 per acre per day.

Explanation of Treatment Process

Ponds are classified according to their dissolved oxygen content. Oxygen in an aerobic pond is distributed throughout the entire depth practically all the time. An anaerobic pond is predominantly with oxygen most of the time because oxygen requirements are much greater than the oxygen supply. In a facultative pond, the upper portion is aerobic most of the time, whereas the bottom layer is predominantly anaerobic.

In aerobic ponds or in the aerobic layer of facultative ponds, organic matter contained in the wastewater is first converted to carbon dioxide and ammonia, and finally to algae in the presence of sunlight. Algae are simple one or many celled microscopic plants which are essential to the successful operation of both aerobic and facultative ponds.

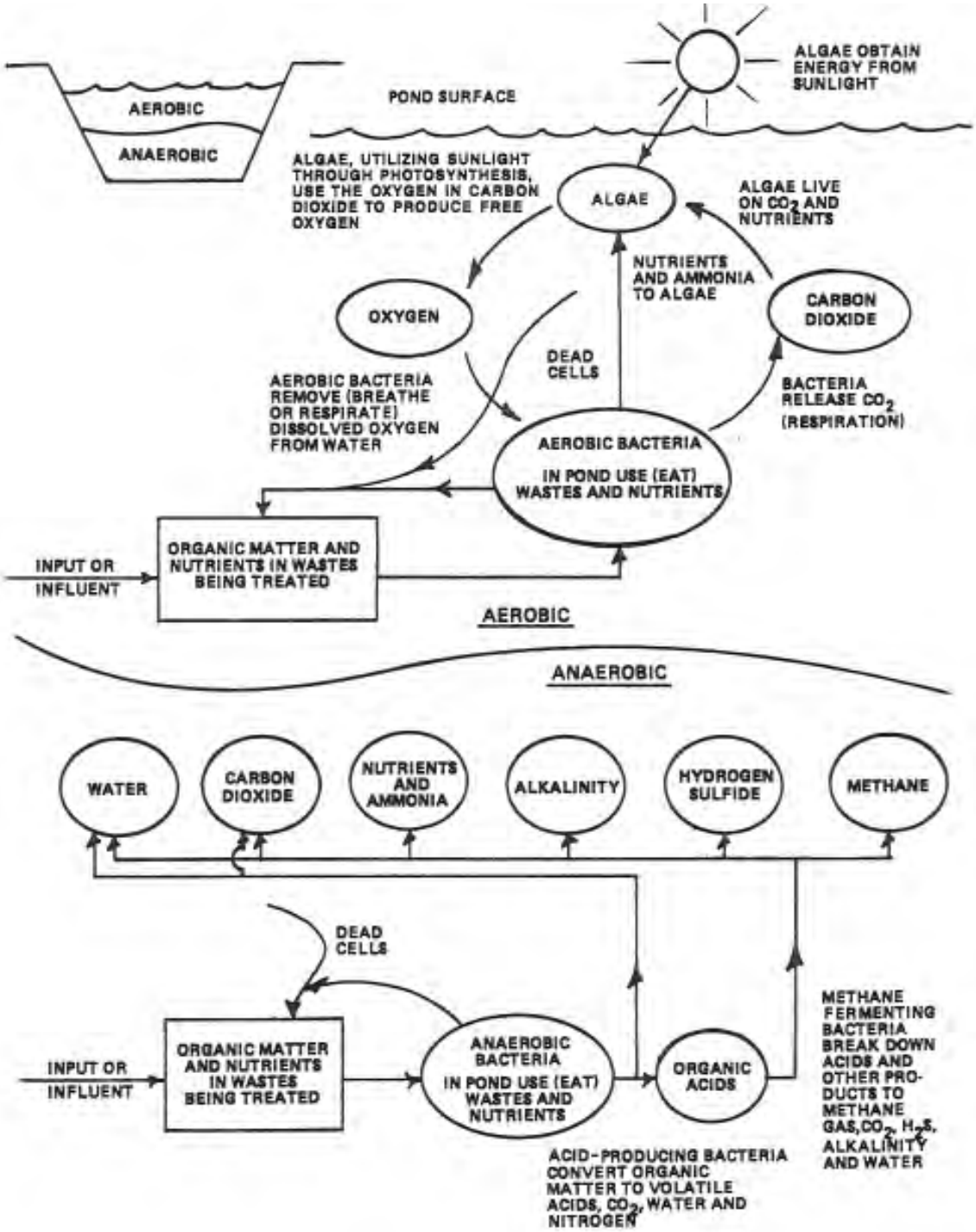

Figure 5.3 - ***The Role of Algae in Treating Wastes in a Pond***

Reprinted, with permission, from *Operation of Wastewater Treatment Plants*, Vol. I, 4th ed., Office of Water Programs, California State University, Sacramento Foundation

By using sunlight through Photosynthesis the algae use the carbon dioxide in the water to produce free oxygen making it available to the aerobic bacteria that inhabit the pond. Each pound of algae in a healthy pond is capable of producing 1.6 pounds of oxygen on a normal summer day. Algae live on carbon dioxide and other nutrients in the wastewater. At night when light is no longer available for photosynthesis, algae use up the oxygen by respiration and produce carbon dioxide. The alternate use and production of oxygen and carbon dioxide can result in diurnal (daily) variations of both pH and dissolved oxygen. During the day algae uses carbon dioxide which raises the pH while at night they produce carbon dioxide and the pH is lowered. Algae are found in the soil, water and air; they occur naturally in a pond without seeding and multiply greatly under favorable conditions.

In anaerobic ponds or in the anaerobic layer of facultative ponds, the organic matter is first converted by a group of anaerobic organisms to organic acids. In an established pond at the same time, a group called the "methane fermenters" breaks down the acids and other products of the first group to form hydrogen sulfide gas, methane gas, carbon dioxide, and alkalinity. Water is another end product of organic decomposition. This process is described in the figure 5.3.

In a successful facultative pond, the processes characteristic of aerobic ponds occur in the surface layers, while those similar to anaerobic ponds occur in its bottom layers.

During certain periods, sludge decomposition in the anaerobic zone is interrupted and it begins to accumulate. If sludge accumulation occurs and decomposition does not set in, it is probably due to a lack of the right bacteria, low pH, low temperature. Under these circumstances, the acid production will continue at a slower rate, but the rate of gas (methane) production slows down considerably.

Sludge storage in ponds is continuous with small amounts stored during warm weather and larger amounts when it is cold. At colder temperatures, the bacteria cannot multiply fast enough to handle the waste. When warm weather comes, the acid producers begin to decompose the accumulated sludge deposits built up during the winter. If the organic acid production is too great, a lowered pH will occur with the possibilities of an upset pond with resulting hydrogen sulfide odors.

Hydrogen sulfide ordinarily is not a problem in properly designed and operated ponds because it dissociates (divides) into hydrogen and hydrosulfide ions at high pH and may form insoluble metallic sulfides or sulfates. This high degree of dissociation and the formation of insoluble metallic sulfides are the reasons that ponds having a pH above 8.5 do not emit odors, even when hydrogen sulfide is present in relatively large amounts. An exception occurs in northern climates during the spring when the pH is low and the pond is just getting started; then hydrogen sulfide odors can be a problem.

All of the organic matter that finds its way to the bottom of a stabilization pond through the various processes of sludge decomposition is subject to Methane Fermentation, provided that proper conditions exist or become established. In order for methane fermentation to exist, an abundance of organic matter must be deposited and continually converted to organic acids. An abundant population of methane bacteria must be present. They require a pH level of from 6.5 to 7.5 within the sludge, alkalinity of several hundred mg/l to buffer (neutralize) the organic acids (volatile acid/alkalinity relationship), and suitable temperatures. Once methane fermentation is established, it accounts for a considerable amount of the organic load removal.

Pond Performance

The treatment efficiencies that can be expected from ponds vary more than most other treatment devices. Some of the many variables are:

1. Physical Factors
   a. type of soil
   b. surface area
   c. depth
   d. wind action
   e. sunlight
   f. temperature
   g. short-circuiting
   h. inflow variations
2. Chemical Factors
   a. organic material
   b. pH
   c. solids
   d. concentration and nature of waste
3. Biological Factors
   a. type of bacteria
   b. type and quantity of algae
   c. activity of organisms
   d. nutrient deficiencies
   e. toxic concentrations

The performance expected from a pond depends largely upon its design. The design, of course, is determined by the waste discharge requirements or the water quality standards to be met in the receiving waters. Overall treatment efficiency may be about the same as primary treatment (only settling of solids), or it may be equivalent

to the best secondary biological treatment plants. Some ponds, usually those located in hot, arid areas, have been designed to take advantage of percolation and high evaporation rate so that there is no discharge.

Depending on design, ponds can be expected to provide BOD removals from 50 to 90 percent. Facultative ponds, under normal design loads with 50 to 60 days detention time, will usually remove approximately 90 to 95 percent of the coliform bacteria and 70 to 80 percent of the BOD load approximately 80 percent of the time. Controlled discharge ponds with 180 day detention times can produce BOD removals from 85 to 95 percent, total suspended solids removals are from 85 to 95 percent, and fecal coliform reductions up to 99 percent.

Starting the Pond

One of the most critical periods of a pond's life is the time that it is first placed in operation. If at all possible, at least one foot of potable water or treated wastewater should be in the pond before wastes are introduced. During start up the pond's pH should always be kept above 7.5. The water should be turned into the pond in advance to prevent odors developing from wastes solids exposed to the atmosphere. Thus a source of water should be available when starting a pond.

A good practice is to start ponds during the warmer part of the year because a shallow starting depth allows the contents of the pond to cool too rapidly if nights are cold. Generally speaking, the warmer the pond contents the more efficient the treatment process.

Algal Blooms normally will appear from seven to twelve days after wastes are introduced into a pond, but it generally takes at least sixty days to establish a thriving biological community. A definite green color is evidence that a flourishing algae population has been established. After this length of time has elapsed bacterial decomposition of bottom solids will usually become established. This is generally evidenced by bubbles coming to the surface near the pond inlet where most of the sludge deposits occur. Although the bottom is anaerobic, travel of the gas through the aerobic surface layers generally prevents odor release.

Wastes should be discharged to the pond intermittently during the first few weeks with constant monitoring of the pH. The pH in the pond should be kept above 7.5 if possible. Initially the pH of the bottom sludge will be below 7 due to the digestion of the sludge by acid-producing bacteria. If the pH starts to drop, discharge to the pond should be diverted to another pond or diluted with makeup water from another source, if another pond is not available, until the pH recovers. A high pH is essential to encourage a balanced anaerobic fermentation (bacterial decomposition) of bottom sludge. This high pH also is indicative of high algal activity since removal of the carbonate from the water in algal metabolism tends to keep the pH high. A continuing low pH indicates acid production which will cause odors. Soda ash (sodium carbonate) may be added to the influent in a pond to increase the pH.

Daily Operation and Maintenance

Because ponds are relatively simple to operate, they are probably neglected more than any other type of wastewater treatment process. Many of the complaints that arise regarding ponds are the result of neglect or poor housekeeping. Following are listed the day-to-day operational and maintenance duties that will help to ensure peak treatment efficiency and to present your plant to its neighbors as a well run waste treatment facility.

Scum Control

Scum accumulation is a common characteristic of ponds and is usually greatest in the spring of the year when the water warms and vigorous biological activity resumes. Ordinarily, wind action will dissipate scum accumulations and cause them to settle; however, in the absence of wind or in sheltered areas, other means must be used. If scum is not broken up, it will dry on top and become crusted. Not only is the scum more difficult to break up then, but a species of blue-green algae is apt to become established on the scum. This can give rise to disagreeable odors. If scum is allowed to accumulate, it can reach proportions where it cuts off a significant amount of sunlight from the pond. When this happens the production of oxygen by algae is reduced and odor problems can result.

Many methods of breaking up scum have been used, including agitation with garden rakes from the shore, jets of water from pumps or tank trucks, and the use of outboard motors on boats in large ponds. Scum is broken up most easily if it is attended to promptly.

Odor Control

Eventually, odors probably will come from a wastewater treatment plant (we are not making ice cream here) no matter what kind of process is used. Most odors are caused by overloading (see the section on pond loading) or poor housekeeping practices and can be remedied by taking corrective measures. If a pond is overloaded, stop loading and divert influent to other ponds, if available, until the odor problem stops. Then gradually start loading the pond again.

Odors usually occur during the spring warm-up in colder climates because biological activity has been reduced during cold weather. When the water warms, microorganisms

become active, use up all of the available dissolved oxygen, and odors are produced under these anaerobic conditions.

There are several suggested ways to reduce odors in ponds. These include recirculation from aerobic units, and the use of floating aerators. Recirculation from a aerobic pond to the inlet of an anaerobic pond (1 part recycle flow to 6 parts influent flow) will reduce or eliminate odors. Usually, floating aeration equipment is too expensive to have standing idle waiting for an odor problem to develop. Odor masking chemicals also have been promoted for this purpose and have some uses for concentrated sources of specific odors. However, in almost all cases, process control procedures of the type mentioned are preferable. In any event, it is poor process control to wait until an emergency arises to plan for odor control. Try to have possible alternate methods of control ready to go in case they are needed.

Weed and Insect Control

Weed control is an essential part of good housekeeping and is not a formidable task with modern equipment. Weeds around the edge are most objectionable because they allow a sheltered area for mosquito breeding and scum accumulation. In most average ponds there is little need for mosquito control when edges are kept free of weed growth. Weeds can also hinder air circulation on a pond. Aquatic weeds, such as cattails, will grow in depths shallower than three feet, so an operating pond level of at least this depth is necessary. Cattails may emerge singly or be well scattered, but should be removed promptly by hand as they will quickly multiply from the root system.

One of the best methods for control of undesirable vegetation is achieved by a daily practice of close inspection and immediate removal of the young plants including roots. Suspended vegetation, such as duckweed, will not flourish if the pond is exposed to a clean sweep of the wind. Dike vegetation control is aided by regular mowing and use of a cover grass that will crowd out undesirable growth. Because emergent weed growth will occur only when sunlight is able to reach the pond bottom, the single best preventive measure against emergent growth is to maintain a water depth of at least three feet. Due to greater water clarity, the amount of sunlight reaching the bottom will be greater in secondary or final ponds than in primary ponds. Because shallow water promotes growth, there will likely always be a battle to keep emergent weeds from becoming well established around lagoon banks.

Whenever emergent or suspended weeds are being pulled from the lagoon, such protective gear as waterproof gloves, boots and goggles should be worn to reduce the chance of infection from pathogens that may be present in the water. Pulled weeds should be buried to prevent odor and insect problems. Although most stabilization ponds are no deeper than five feet, there is still sufficient depth to drown an person. Using the buddy system and approved flotation devices will greatly increase the safety level when performing any pond maintenance, especially when using a boat or mowing the dike. Control measures include:

Emergent Weeds

1. Keep the water level above three feet.
2. Pull out new (first year) growth by hand
3. Drown the weeds by raising the water level.
4. Lower the water levels, cut the weeds or burn them with a gas burner, and raise the water level (cut and drown).
5. Use herbicides as a last resort (herbicides will also kill the algae in the ponds).

Suspended Vegetation

1. Keep the pond exposed to a clean sweep of the wind.
2. A few ducks may be used to eat light growth of duckweed.
3. Small ponds may be skimmed with rakes or boards. This may have to be repeated.
4. Excessive growth can be mechanically harvested.

Dike Vegetation

1. Mow regularly during the growing season. Dike slopes may be cut using sickle bars or weed-eater equipment. When using heavy equipment, mowers designed especially for cutting slopes are preferable. Any tractor used on the dike should have a low center of gravity. The tractor must be provided with an approved roll-over protective structure and seat belts if within certain use/weight classifications. Check with your local safety regulatory agency for applicable rules.
2. Seed or reseed slopes with desirable grasses that will form a thick and somewhat impenetrable mat.

Herbicides are a last resort in vegetation control for ponds (if then), not only because of the obvious hazards facing the operator, but also because of dangers presented to the biological growth in the pond and receiving stream (if discharging).

Caution. Before attempting to apply any insecticide or pesticide, contact your local official in charge of approving pesticide applications. This person can tell you which chemicals may be applied, the conditions of application, and safe procedures.

Levee Maintenance

Levee slope erosion caused by wave action or surface runoff from precipitation is probably the most serious maintenance problem. If allowed to continue, it will result in a narrowing of the levee crown which will make accessibility with maintenance equipment most difficult.

If the levee slope is composed of easily eroded material, one long range solution is the use of bank protection such as stone riprap or broken concrete rubble.

Portions of the pond levee or dike not exposed to wave action should be planted with a low growing spreading grass to prevent erosion by surface runoff. Native grasses may naturally seed the levees, or local highway departments may be consulted for suitable grasses to control erosion. If necessary, grass may have to be mowed to prevent it from becoming too high. Do not allow grazing animals to control vegetation because they may damage the levees near the waterline and possibly complicate erosion problems.

Plants or grasses with long roots, such as willows and alfalfa, should not be allowed to grow on levees because they may damage the levees and possibly cause levee failure and costly repair. Burrowing animals such as muskrats, badgers, squirrels and gophers also may cause levees to fail. Remove these animals from levees as soon as possible and repair their burrowed holes immediately.

Levee tops should be crowned so that rainwater will drain over the side in a sheet flow. Otherwise the water may flow a considerable distance along the levee crown and gather enough flow to cause erosion when it finally spills over the side and down the slope.

If seepage or leakage from the ponds appears on the outside of levees, ask your engineer to investigate and solve this problem before further damage occurs to the levee.

Headworks and Screening

Be sure too clean the bar screen as frequently as necessary. The screen should be inspected at least once or twice a day with more frequent visits during storm periods. Screenings should be disposed of daily in a sanitary manner to avoid odors and fly breeding. A method of disposal is to place screenings in garbage cans and request that your local garbage service dispose of the screenings at a sanitary landfill disposal site.

Many pond installations have grit chambers at the headworks to protect raw wastewater lift pumps or prevent plugging of the influent lines. There are many types of grit removal equipment. Grit removed by the various types of mechanical equipment or by manual means will usually contain small amounts of organic matter and should therefore be disposed of in a sanitary manner.

Batch Operation

Some ponds do not discharge continuously. These ponds may discharge only once (fall) or twice (fall and spring) a year. Advantages to this type of operation are that discharges can be made only when necessary and, if possible, during the nonrecreational season when flows are high in the receiving waters. Discharging when flows are high in the receiving stream, reduce the impact of the effluent on water quality. If your pond is allowed to discharge intermittently (controlled discharge), you must work closely with your pollution control agency and be sure that you are in compliance with the National Pollutant Discharge Elimination System (NPDES) permit. The Operator should test the pond prior to discharge and insure that all water quality parameters will be met.

Ponds should not be emptied too quickly. Usually ponds are emptied in two weeks or less depending on how much water is to be discharged. Normally 1.0 to 1.5 feet of water is left in the bottom of the pond.

Operating Strategy

In order to prevent your ponds from developing odors or discharging an effluent in violation of the NPDES permit requirements, you should develop a plan to keep your ponds operating as intended.

Maintain Constant Water Elevations in the Ponds

A constant pond level will help to maintain constant loadings. Should the water surface start to drop, look for the following possible causes:

1. Discharge valve open too far or a stop log is missing
2. Levees leaking due to animal burrows, cracks, soil settlement or erosion
3. Inlet lines plugged or restricted and causing wastewater to back up into the collection system.
4. Should the water surface start to rise, look for:
   a. Discharge valve closed or lines plugged.
   b. Sources of infiltration.

Note: Under some conditions you may not want to maintain constant water levels in your ponds. For example, you may allow the water surface to fluctuate to:

a. Control Shoreline aquatic vegetation,
b. Control mosquito breeding and burrowing rodents
c. Handle fluctuating inflows, and
d. Regulate discharge
   (continuous, intermittent or seasonal).

Distribute Inflow Equally To Ponds

All ponds designed to receive the flow should receive the same hydraulic and organic (BOD) loadings.

Keep Pond Levees or Dikes in Good Condition

Proper maintenance of pond levees can be a time saving activity. Regularly inspect levees for leaks and erosion and correct any problems before they become serious. If erosion is a problem at the waterline, install riprap. Do not allow weeds to grow along the waterline and keep weeds on the levee mowed.

Observe and test Pond Condition

Daily visual observations can reveal if a pond is treating the wastewater properly. The pond should be a deep green color indicating a healthy algae population. Scum and floating weeds should be removed to allow sunlight to reach the algae in the pond.

Once or twice a week tests should be conducted to determine pond dissolved oxygen level, pH and temperature. It is important that these tests be taken at the same time of the day, as the fluctuating conditions in the pond will change these test results during the day. Keep good records of test results as they will be the prime indicators of a pond's condition. The change in the water quality is the first sign of problems developing in the ponds. Effluent dissolved oxygen should be measured at this time also. Other effluent tests should be conducted at least weekly and include BOD, suspended solids, dissolved solids, coliform group bacteria and chlorine residual. If ponds are operated on a batch or controlled discharge basis, these effluent tests will have to be determined only during periods of discharge.

During warm summer months algae populations tend to be high and may cause high suspended solids concentrations in the effluent. An advantage of ponds in arid regions is that this is also a period of high evaporation rates. Under these conditions effluent flows may drop to almost zero or may be stopped. In the fall and winter when the weather is cool and sunlight is reduced, the algae population in ponds and thus the suspended solids are reduced. This situation could allow ponds to meet effluent requirements during this period.

If test results reveal that certain water quality indicators (such as DO, BOD, pH or suspended solids) are tending to move in the wrong direction, try to identify the cause and take corrective action. Remember that ponds are a biological process and that changes resulting from corrective action may not occur until a week or so after a change has been made.

Troubleshooting

The trouble shooting guide on the next pages can provide you with step by step procedures to follow when problems develop in a pond.

Surface Aerators

Surface aerators have been used in two types of applications:

1. To provide additional air for ponds during the night, during cold weather, or for overloaded ponds;
2. To provide a mechanical aeration device for ponds operated as aerated lagoons. Aerated lagoons operate like activated sludge aeration tanks without returning any settled activated sludge.

In both cases, the aerators are operated by time clocks with established ON/OFF cycles. Laboratory tests on the dissolved oxygen in a pond indicate the time period for ON and OFF cycles to maintain aerobic conditions in the surface layers of the pond. Adjustments in the ON/OFF cycles are necessary when changes occur in the quantity and quality of their influent and seasonal weather conditions. Some experienced operators have correlated their lab test results to pond appearance and regulate the on/off cycles using the following rule: "If the pond has foam on the surface, reduce the operating time of the aerator; and if there is no evidence of foam on the pond surface, increase the operating time of the aerator." If there is a trace of foam on the surface, the operating time is satisfactory.

Surface aerators may be either stationary or floating. Maintenance of surface aerators should be conducted in accordance with manufacturer's recommendations. Always turn off, tag, and lock out electrical current when repairing surface aerators. Special precautions may be necessary to

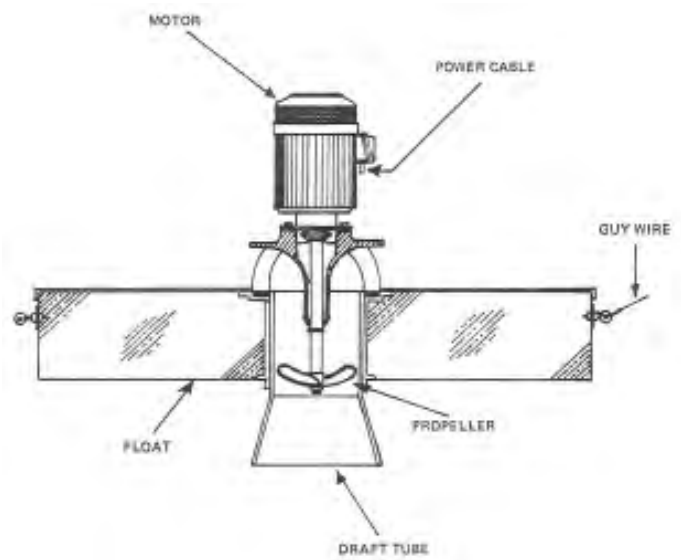

Figure 5.4 - *Surace Aerator*

Table 5.2a - **Troubleshooting Guide — Ponds**

(Adapted from *PERFORMANCE EVALUATION AND TROUBLESHOOTING AT MUNICIPAL WASTEWATER TREATMENT FACILITIES*, Office of Water Program Operations, US EPA, Washington, DC.)

INDICATOR/OBSERVATION	PROBABLE CAUSE	CHECK OR MONITOR	SOLUTION
1. Poor quality effluent.	1a. Mixing/agitation equipment failure.	1a. Monitor surface aerators, rotors, or aeration equipment and DO of pond water.	1a. 1. Restart out of service mixing or aeration units. 2. Increase operating time. 3. Increase recycle flow from effluent to influent. 4. Provide additional mixing (small boat and outboard motor for one hour for every two hours of daylight, or at least three times a day).
	1b. Organic overload.	1b. Monitor influent laboratory data: BOD, SS, DO, pH, temperature.	1b. 1. Increase or start recirculation of effluent to influent. 2. Mix pond contents hourly by surface aerators or outboard motor on small boat at least three times per day. 3. Increase run cycle on surface aeration equipment to maintain at least 1.0 mg/*L* DO. 4. Add chemicals to help reduce pond load by prechlorination for BOD reduction, add sodium nitrate or hydrogen peroxide for oxygen input.
	1c. Excessive turbidity from scum mats.	1c. Floating mats of scum or sludge on surface and corners of pond.	1c. 1. Break up scum mats a. water sprays b. poles or rakes c. mixing equipment d. outboard motor 2. Check pond influent for excess grease or scum. 3. If seasonal temperature change, rising sludge from pond may have to be broken up daily by mixing methods in item 1c.1. above.
	1d. Blockage of light by excessive plant growth (tules, reeds, and/or grasses) near dikes.	1d. Visual inspection for weed growth in and near ponds.	1d. 1. Remove plant growth. 2. Schedule regular herbicide applications to levees and dikes as a last resort.
	1e. Low temperature.	1e. Monitor air and pond water temperature.	1e. 1. Freezing weather, raise pond levels to increase water depth. 2. Reduce recirculation rates. 3. If possible, operate ponds in series.
	1f. Toxic material in influent.	1f. Color change, low DO, low pH for no apparent reason.	1f. 1. Sample and try to identify toxic material. 2. Increase recirculation from effluent to influent. 3. Increase surface aeration or pond mixing times. 4. Implement new or enforce existing sewer-use ordinances. 5. See 1b. above.
	1g. Loss of pond volume caused by sludge accumulation.	1g. Sludge depth.	1g. Remove sludge.

Table 5.2b - Troubleshooting Guide — Ponds

INDICATOR/OBSERVATION	PROBABLE CAUSE	CHECK OR MONITOR	SOLUTION
2. Low dissolved oxygen in ponds.	2a. Low algae growth.	2a. Visual inspection, pond not green, low DO during daylight hours, none from sunup until noon. Odor.	2a. 1. Recirculate last pond effluent to inlet of first pond. 2. Same as 1b.
	2b. Excessive scum accumulation.	2b. Pond surface conditions.	2b. 1. Break up and sink resuspended scum. 2. Skim off grease balls and scum. Dispose of in landfill.
3. Odors.	3a. Anaerobic conditions.	3a. Monitor pond loading, BOD, SS, pH, DO and temperature.	3a. 1. Limit organic load by diverting influent flows to several ponds. 2. Same as 1b.
	3b. Hydrogen sulfide in pond influent.	3b. Monitor total dissolved H_2S.	3b. 1. Check collection system. 2. Pretreat with chlorine or pre-aeration. 3. Aerate plant influent in small pond at least 30 minutes before applying to other ponds.
4. Inability to maintain sufficient liquid.	4a. Leakage.	4a. 1. Seepage around dikes. 2. Sampling wells located on the outside perimeter of the pond(s).	4a. 1. Apply bentonite clay to the pond water to seal leak. 2. If sampling well analysis indicates contamination, the lagoon/pond site may require lining.
	4b. Excessive evaporation or percolation.	4b. Detention time in pond is probably too long.	4b. Divert land drainage or stream flow into pond.
5. Insect generation.	5a. Layers of scum and excessive plant growth in sheltered portions of the pond.	5a. Visual inspection. Mosquitoes.	5a. 1. Weed and scum removal. 2. Application of approved insecticides or larvacides.
	5b. Shallow pools of standing water outside pond.	5b. Visual inspection.	5b. Cut vegetation outside pond, and fill in potholes that collect standing water nearby.
6. Levee erosion.	6a. Windy conditions.	6a. Visual inspection.	6a. 1. Riprap levee. 2. Construct a wind barrier around pond.
	6b. Excessive surface aerator operating time.	6b. Aerator operating time.	6b. Reduce aerator operating time if DO levels allow.
7. Excessive weeds and tule growth.	7a. Pond too shallow.	7a. Visual inspection for weeds in the area.	7a. Deepen all pond areas to at least 3 feet.
	7b. Inadequate maintenance program to control vegetation.	7b. Maintenance program.	7b. 1. Correct program deficiency. 2. Install pond lining. 3. Herbicide program as a last resort.
	7c. Poor circulation.	7c. Visual inspection of flow characteristics.	7c. Fluctuate pond level.
8. Animals burrowing into the dikes.	8a. Burrowing animals (gophers, squirrels, crayfish).	8a. Visual inspection.	8a. 1. Alter pond level several times in rapid succession. 2. Remove animals as soon as possible. 3. Provide riprap with semiporous sheet on levee slopes.
9. Groundwater contamination.	9. Leakage through bottom and/or sides of pond.	9. Seepage around pond dikes.	9. Apply bentonite clay to pond water to seal leak.

handle problems with icing and winter maintenance. Overhead guy wires have been used to prevent aerators from turning over when iced up. If an aeration system becomes plugged due to deposits of carbonate, try reducing the aeration or adding carbon dioxide gas.

Mechanical aeration supplements or replaces algal photosynthesis as the source of oxygen for waste stabilization in an aerated lagoon. This increases the cost of operation but decreases the size and cost of the system. The organic loading is higher for aerated lagoons than for facultative lagoons in the range of 50-200 lbs BOD_5 per acre per day. Aeration is provided by brush aerators, propeller pumps, or from a diffused air system. Many aerated lagoons evolve from overloaded facultative lagoons. Properly designed aerated lagoons are 8-16 feet deep, which allows adequate room for sludge storage at the bottom of the lagoon below the influence of mixing. One problem with upgrading a facultative lagoon to an aerated one is the lack of sludge storage capacity in a shallow basin.

Table 5.3

PURPOSE OF AERATOR PARTS

Part	Purpose
PLATFORM AERATOR COMPONENTS	
Aerator	Introduces oxygen into pond.
Electric Motor	Provides energy to drive aerator.
Drive Reduction Gear Box	Converts torque from motor to drive impeller.
Draft Tube	Conveys bottom contents of pond to surface for aeration.
Discharge Guide	Regulates spray patterns for oxygen transfer to water.
Jacking Screw	Adjusts aerator impeller level in water to regulate oxygen transfer and motor loading amps.
FLOATING AERATOR COMPONENTS (additional)	
Pontoons or Floats	Provide platform for motor.
Guy Wires	Maintain aerator positions in ponds and are anchored to pond levee.
Power Cable	Conveys power to motor.
Impeller (aerator)	Pumps water into air to be aerated.

Sampling and Analysis

Probably the most important sampling that can be accomplished easily by any operator is routine pH, temperature, and dissolved oxygen tests several times a week, and occasionally during the night. These values should be recorded because they will serve as a valuable record of performance. The time of day should be varied occasionally for the tests so that the operator becomes familiar with the pond's characteristics at various times of the day. Usually the pH and dissolved oxygen will be lowest just at sunrise. Both will get progressively higher as the day goes on, reaching their highest level in late afternoon.

Ponds often have clearly developed individuality, each being a biological community that is unique unto itself. Apparently identical adjacent ponds receiving the same influent in the same amount often have a different pH and a different dissolved oxygen content at any given time. One pond may generate considerable scum while its neighbor doesn't have any scum. For this reason, each pond should be given routine pH and dissolved oxygen tests. Such testing may indicate an unequal loading because of the internal clogging of influent of distribution lines that might not be apparent from visual inspection. Tests also may indicate differences or problems that are being created by buildup of solids or solids recycling. PH and D.O. samples are usually collected at the outlet side of the pond unless a complete profile is done. PH and D.O. in primary ponds should be >7.0 pH, and >1.0 mg/l D.O. PH and D.O. in a healthy secondary pond is typically > 8.0 pH and > 5.0 mg/l D.O.

When an operator becomes familiar with operating a pond, the results of some of the chemical tests can be related to visual observations. A deep green sparkling color generally indicates a high pH and a satisfactory dissolved oxygen content. A dull green color or lack of color generally indicates a declining pH and a lowered dissolved oxygen content. A gray color indicates the pond is being overloaded or not working properly.

Frequency and Location of Lab Samples

The frequency of testing and expected ranges of test results vary considerably from pond to pond, but you should establish those ranges within which your pond functions properly. Tests results will also vary during the hours of the day. The table below summarizes the typical tests, and locations, and frequency of sampling.

Samples should always be collected from the same point or location. Raw wastewater samples for pond influent tests may be collected either at the wet well of the influent pump station or at the inlet control structure. Samples of pond effluent should be collected from the outlet control structure or from a well mixed point in the outfall channel. Pond samples may be taken from the four corners of the pond. The samples should be collected from a point eight feet out from the water's edge and one foot below the water surface. Be careful; try not to stir up material from the

pond bottom. Do not collect pond samples during or immediately after high winds or storms because solids will be stirred up after such activity.

BOD should be measured on a weekly basis. Samples should be taken during the day at low flow, medium flow, and high flow. The average of these three tests will give a reasonable indication of the organic load of the wastewater being treated. If it is suspected that the BOD varies sharply during the day or from day to day, or if unusual circumstances exist, the sampling frequency should be increased to obtain a clear definition of the variations. If the pond DO level is supersaturated, the sample must be aerated to remove the excess oxygen before the BOD test is performed.

Table 5.4

FREQUENCY AND LOCATION OF LAB SAMPLES

Test	Frequency[a]	Location	Common Range
pH[b]	Weekly	Pond	7.5+
Dissolved Oxygen (DO)[b]	Weekly	Pond Effluent	4 - 12 mg/*L* 4 - 12 mg/*L*
Temperature	Weekly	Pond	
BOD[c]	Weekly	Influent Effluent	100 - 300 mg/*L* 20 - 50 mg/*L*
Coliform-Group Bacteria	Weekly	Effluent	MPN > 24,000/100 m*L* (unchlorinated)
Chlorine Residual	Daily	Effluent	0.5 - 2.0 mg/*L*
Suspended Solids[d]	Weekly	Influent Effluent	100 - 350 mg/*L* 40 - 80 mg/*L*
Dissolved Solids	Weekly	Influent	250 - 800 mg/*L*

[a] Tests may be less frequent for ponds with long detention times (greater than 100 days).
[b] pH values above 9.0 and DO levels over 15 mg/*L* are not uncommon.
[c] Contact your regulatory agency to determine whether effluent samples should be filtered to remove algae before testing. If the samples must be filtered, the agency will recommend the proper procedures.
[d] Effluent suspended solids consist of algae, microorganisms and other suspended matter.

References

Office of Water Programs, California State University, Sacramento, *Operation of Wastewater Treatment Plants*, Volume 1, 4th ed., Chapter 9.