CHAPTER 13: NITROGEN REMOVAL

THE NITROGEN CYCLE

Nitrogen, element number seven on the periodic table, is an essential part of living matter and a relatively common element on our planet. 70% of the atmosphere that we breathe is nitrogen, and plants and animals alike require nitrogen as one of the building blocks of living tissue. Because of the many oxidation states that nitrogen can assume, it exists in many forms. Ammonia (NH3), nitrite (NO2), nitrate (NO3) and organically bound nitrogen are just a few of the many possible compounds of nitrogen. The nitrogen on our planet is constantly being changed from one form to another. These changes are illustrated by the nitrogen cycle.

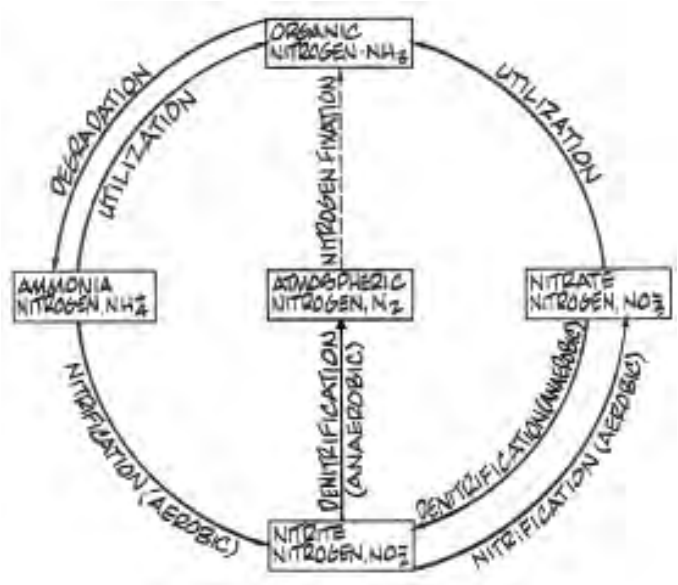

Figure 13.1 - *Wastewater Nitrogen Cycle*

THE NEED FOR NITROGEN REMOVAL

Inorganic nitrogen provides a nutrient source for algae in receiving waters. The combination of nitrogen and phosphorous can cause uncontrolled algae blooms, which choke waterways. As the lower layers of algae die off, the decomposing material can cause low D.O. conditions to exist. This condition is known as eutrophication. Algae can also cause taste and odor problems in drinking water supplies. Ammonia is toxic to many fish and aquatic species. When discharged from a treatment plant, it can cause fish kills and the death of other aquatic organisms in the receiving stream. Ammonia toxicity increases when little dilution is available in the receiving stream, and when the pH and temperature of the stream are elevated. Ammonia also creates a biological oxygen demand, which contributes to eutrophication in natural waters.

Nitrate can act as a nutrient in receiving streams and poses a health risk whenever it is allowed to contaminate drinking water supplies. The drinking water problem is of particular importance in New Mexico, where numerous septic tank discharges into shallow groundwater have resulted in the contamination of drinking water supply wells. When water that contains elevated levels of nitrate (> 20 mg/L) is consumed, an illness known as methemoglobinemia can occur. Typically affecting infants and the elderly, methemoglobinemia causes its victims to turn a pale blue/ gray and become lethargic and ultimately comatose. Death can soon follow if no treatment is administered. It mostly affects infants, and so is commonly known as “blue-babies syndrome”.

For all of these reasons, the removal of nitrogen from wastewater continues to grow in importance. In the future, with increased effluent re-use and greater stress placed upon our rivers, lakes and streams, the importance of nitrogen removal will only increase.

THE MANY FORMS OF NITROGEN

Nitrogen can combine with many other elements to form a variety of compounds. Table 13.1 summarizes the common forms of nitrogen of interest to the wastewater operator.

Table 13.1 - *Common Forms of Nitrogen*

Nitrogen Compound	Chemical Symbol	Location Where Commonly Found	Typical Concentration at This Location
Nitrogen Gas	N2	Atmosphere	70%
Ammonia/ Ammonium	NH3/ NH4	Domestic Wastewater	30 – 50 mg/L
Total Kjeldahl Nitrogen (Sum of organically bound nitrogen and ammonia/ ammonium).	TKN	Domestic Wastewater, Effluent	30 – 60 mg/L
Nitrate	NO3	Nitrified Effluent	1 – 35 mg/L
Nitrite	NO2	Partially Nitrified Effluent	0.1 – 2 mg/L

As indicated in the table, nitrogen is present in domestic wastewater mainly in the form of ammonia and organically bound nitrogen. (Depending upon pH, ammonia can exist in solution as a gas, (NH3), or in solution as a dissolved solid; ammonium (NH4)). Ammonia and organic nitrogen compounds can be measured collectively using the Total Kjeldahl Nitrogen (TKN) test method.

Although they may do a good job at removing BOD, TSS and pathogens, modern wastewater treatment plants remove only a small amount of the TKN present in the influent, unless configured specifically for nitrogen removal. There are a variety of methods for removing nitrogen from wastewater. Table 13.2 lists the most common.

TABLE 13.2 TYPES OF NITROGEN REMOVAL SYSTEMS

System	Operational Considerations
1. PHYSICAL TREATMENT METHODS	1. Expensive
A. Sedimentation	
B. Gas Stripping	
2. CHEMICAL TREATMENT METHODS	2. Expensive
A. Breakpoint Chlorination	
B. Ion Exchange	
3. BIOLOGICAL TREATMENT METHODS	
A. Activated Sludge Processes	3. A-D Operational control. Additional costs for oxygen to produce nitrification.
B. Trickling Filter Processes	
C. Rotating Biological Contactor Processes	
D. Oxidation Pond Processes	
E. Land Treatment Processes (Overland Flow)	3. E & F Land requirements. Suitable temperatures. Control of plants.
F. Wetland Treatment Systems	

Reprinted, with permission, from *Operation of Wastewater Treatment Plants*, Vol. III, 2nd ed., Office of Water Programs, California State University, Sacramento Foundation

Biological Nutrient Removal

In the natural world, changes to nitrogen compounds are mostly accomplished biologically, by living organisms. These organisms live in environments that are aerobic, anaerobic and even anoxic. Modern wastewater treatment plants can be designed (or operated in a modified fashion) to manipulate microorganisms into changing nitrogen compounds. Typically, nitrogen is in the form of ammonia and organic nitrogen in influent. If accomplished in the correct order, the nitrogen compounds that enter the influent (mainly ammonia) can be converted first into nitrate and then converted into nitrogen gas (N2), which escapes into the atmosphere and is thus removed. This process is known as nitrification/denitrification. To understand how it works, it is important to understand how (and why) microorganisms change nitrogen from one compound to another. Each of the major processes is described below.

Nitrogen Fixation

The majority of nitrogen exists as nitrogen gas in the earth's atmosphere. Specialized plants, known as legumes, can capture atmospheric nitrogen and turn it into plant matter. This process is known as nitrogen fixation. Legumes accomplish nitrogen fixation through a symbiotic relationship with a group of aerobic, facultative and anaerobic bacteria that live near their roots. These bacteria are actually responsible for transforming atmospheric nitrogen into compounds that the plants can readily use, such as nitrate. The plant's use of nitrogen results in increased plant matter. As the plants are consumed by higher life forms, the organically bound nitrogen is passed along for use by other organisms.

Anaerobic Decomposition

Organically bound nitrogen can be broken down into ammonia by anaerobic bacteria through the process of anaerobic decomposition. A good example of this is what happens in a septic tank. Much of the organic nitrogen that enters a septic tank is converted into ammonia, which is released in the septic tank effluent. For this reason, the ammonia concentration coming out of a septic tank is often higher than the ammonia concentration going in. Organic acids are formed as by-products of anaerobic decomposition, which tend to lower the pH of wastewater passing through the process.

Nitrification

Nitrification is the process by which ammonia is oxidized into nitrite and then nitrate. Working under strict aerobic conditions (> 1.0 mg/L D.O.), two groups of autotrophic microorganisms accomplish nitrification. The species Nitrosomonas is primarily responsible for converting ammonia into nitrite, while the species Nitrobacter converts nitrite into nitrate. Both organisms are strict aerobes and are very sensitive to changes in their environment. Rapid changes to pH, temperature, D.O. levels and other factors can result in a large-scale die off. In this sense, the nitrifiers are the "*prima donnas*" of the wastewater microorganism world. The rate at which nitrification will occur in a wastewater treatment facility is regulated by the numbers of nitrifiers available.

Nitrification can be accomplished in activated sludge systems, trickling filters, RBCs, lagoons and other types

of treatment facilities, provided conditions are right. Because it is a strictly aerobic process, sufficient levels of dissolved oxygen must be provided. Typically, a D.O. level of at least 1 - 2 mg/L must be maintained to realize efficient nitrification. However, the D.O. that is available affects the nitrification rate. More D.O. will result in higher levels of nitrification, up to a maximum of about 4.0 mg/L of D.O. In order to completely nitrify each pound of ammonia, 4.6 pounds of dissolved oxygen are required.

The nitrifiers can only carry out efficient nitrification within a pH range of 7.5 – 8.5. Outside of this range, the rate of nitrification slows to generally unacceptable levels. Alkalinity is consumed during nitrification as part of the biological reaction. For each pound of ammonia nitrified into nitrate, 7.2 pounds of alkalinity (as CaCO3) are destroyed. Because of the destruction of alkalinity through the release of hydrogen ions, sustained nitrification causes a drop in pH. In communities that use treated surface water for their potable supply, which are often low in alkalinity, the insufficient alkalinity is sometimes responsible for limiting the rate of nitrification in the wastewater treatment facility. This problem is easy to overlook.

Denitrification

Denitrification is the process by which microorganisms reduce nitrate to nitrogen gas. A number of species that occur in wastewater are capable of accomplishing denitrification. These are sometimes referred to as *facultative organisms*. All of the organisms that can accomplish denitrification are Heterotrophic, because they can metabolize complex organic substances. Normally, Heterotrophic organism will metabolize waste using dissolved oxygen whenever it is available (> 0.1 mg/L). When placed in anoxic conditions, (an environment having < 0.1 mg/L dissolved oxygen), the facultative organisms can turn to the oxygen bound in nitrate as a means of metabolizing waste. Utilizing the oxygen contained within the nitrate molecule results in the release of nitrogen gas. Given time or agitation, the nitrogen gas will escape from solution and exit into the atmosphere. This phenomenon is commonly observed in secondary clarifiers, where the rising gas bubbles float particles of sludge to the surface.

Denitrification occurs in two steps. First, nitrate is reduced to nitrite. Next, nitrite is reduced by the microorganism dissimulation process to gaseous forms of nitrogen (primarily N2).

Denitrification can be accomplished using fixed growth reactors, such as trickling filters, RBCs and constructed wetlands system (although this use is somewhat uncommon in New Mexico). More commonly, denitrification is accomplished in modified activated sludge systems that incorporate anoxic zones.

The rate at which denitrification can occur is limited by the presence of dissolved oxygen. If more than 0.1 mg/L of D.O. is present, the facultative organisms will use the D.O. for respiration, instead of turning to nitrate. For this reason, it is critical that dissolved oxygen be eliminated. This typically requires that a large source of carbon be provided for the microorganisms to metabolize. Influent is commonly fed into anoxic zones to provide a carbon source, however, in some cases, alternative sources of carbon must be used. Methanol has been successfully employed as a source of carbon to drive denitrification, although the complication and expense often outweigh the benefits.

Temperature has a profound effect upon denitrification. At liquid temperatures of 10º C (50º F), denitrification tapers off dramatically. In fact, 10º C can be considered a lower limitation for denitrification. Below this temperature, biological denitrification cannot be used to effectively remove nitrate. This fact causes many problems with wastewater treatment facilities in cold climates that must remove nitrogen for permit compliance. The impracticality of warming large amounts of wastewater for the purposes of achieving denitrification makes the 10º C temperature wall a very hard barrier to contend with.

Land Application of Effluent

Many dischargers in New Mexico utilize land application of effluent as a means of removing residual nitrogen from treated effluent under permits issued by the NMED Ground Water Quality Bureau. In this method, nitrogen in the effluent is applied at the agronomic uptake rate of a crop that is grown with the effluent, such as turf, landscaping or feed crops. As the nitrogen is applied to the crops, the growing plants take it up as fertilizer. When the green plants are cut and removed, the nitrogen bound in them is removed, and thus prevented from contaminating the underlying ground water. The reporting requirements for this type of discharge are discussed in further detail in “Chapter 15, Sampling and Reporting”.

Physical Nitrogen Removal

Nitrogen can be removed from wastewater through physical means. The most common method is ammonia stripping, which is described below.

Ammonia Stripping

Ammonia (NH3) exists as a gas in solution. Ammonium (NH4) is a dissolved solid. Depending on the pH, nitrogen will exist as ammonia or ammonium.

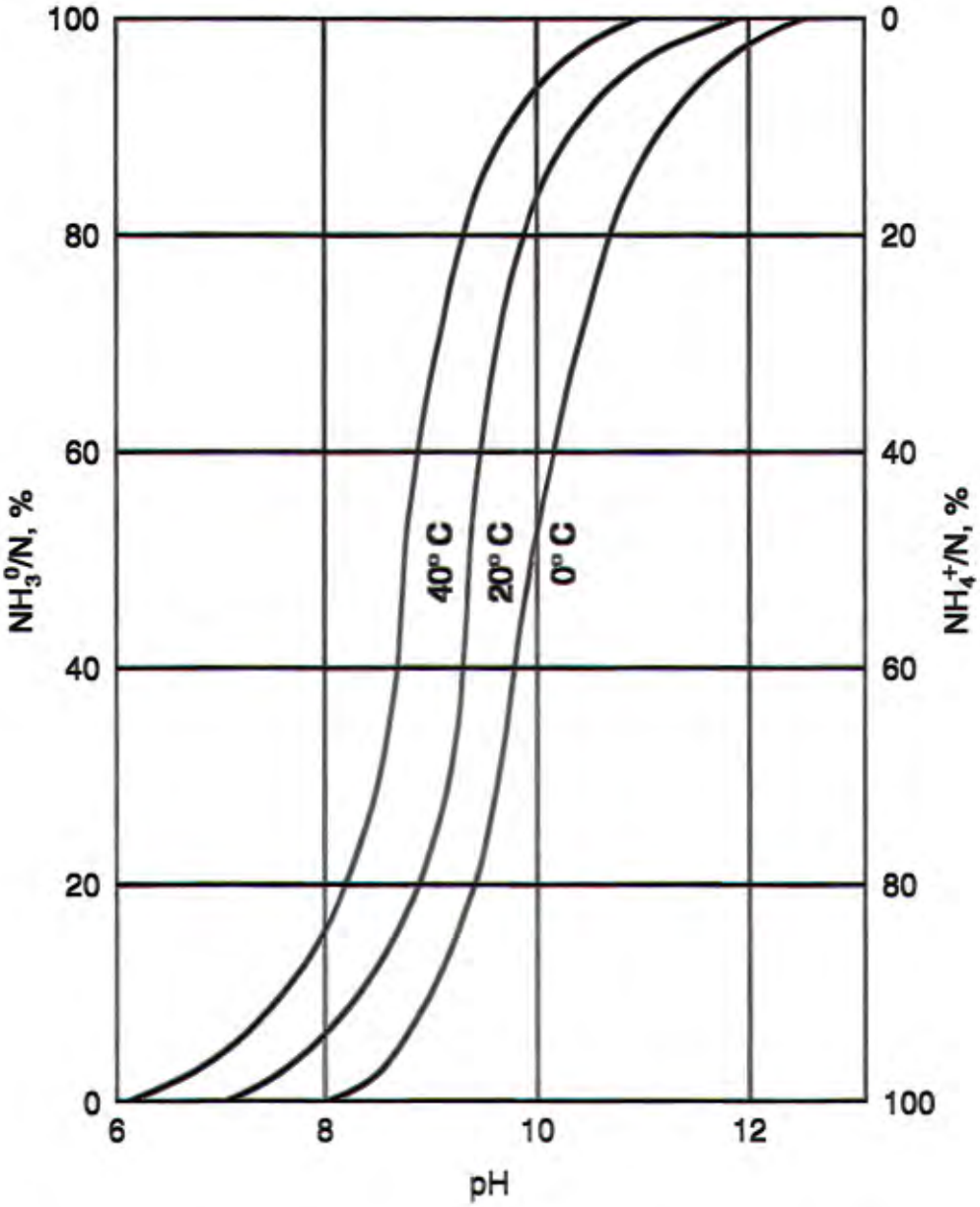

Figure 13.2 - ***Effects of pH and Temperature on Equilibrium Between Ammonium Ion (NH^4+) and Ammonia Gas ($NH^3$0)***

Reprinted, with permission, from *Operation of Wastewater Treatment Plants*, Vol. III, 2nd ed., Office of Water Programs, California State University, Sacramento Foundation

Ammonia, because it is a gas, will come out of solution readily and exit into the atmosphere (strip). Ammonium, as a dissolved solid, will not. Therefore, to effectively strip ammonia from wastewater, the pH must be raised to a point that most of the compound will exist as ammonia. At pH 11 and a temperature of 25º C, the percentage of the compound that exists as ammonia is 98%. At this pH, agitation of the wastewater or spraying the wastewater into fine droplets will result in a high level of ammonia removal through stripping. Caustic ammonia stripping usually employs a packed tower with a counter current of forced air. High levels of ammonia removal can be reliably achieved, however the cost is generally prohibitive.

To a lesser extent, this phenomenon is responsible for much of the nitrogen removal that is achieved by lagoon systems. Because the pH of lagoons is often elevated over 8.5 during periods of high algae activity, ammonia stripping can be responsible for removal of much of the nitrogen in the wastewater. Although this method offers an inexpensive and simple means for nitrogen removal using lagoons, please note that the effectiveness is limited and effluents with less than 10 mg/L total nitrogen are hard to obtain.

Chemical Nitrogen Removal

There are two common chemical methods for removing nitrogen from wastewater; breakpoint chlorination and ion exchange. Neither is used on a widespread basis in New Mexico as a means of discharge permit compliance.

Breakpoint Chlorination

Ammonia/ ammonium nitrogen can be oxidized to nitrogen gas with chlorine. Breakpoint chlorination is the term used to describe the process. To reach the chlorine breakpoint, enough chlorine must be added to satisfy all of the demand in the wastewater. Any ammonia in the wastewater is oxidized to nitrogen gas, and all other pollutants are oxidized as well. When the addition of more chlorine results in a comparable increase in the free residual, the breakpoint has been achieved.

Breakpoint chlorination requires relatively high volumes of chlorine compared with the amount of ammonia being oxidized. In fact, the chlorine to ammonia ratio is around 10:1. This means that it takes 10 pounds of chlorine to oxidize one pound of ammonia into nitrogen gas. The high demand makes breakpoint chlorination impractical for any use other than for polishing an effluent following another nitrogen removal process. In this practice, the bulk of the influent ammonia is removed through biological processes and then the remaining 1 –2 mg/L of ammonia is removed through breakpoint chlorination.

Ion Exchange

The ion exchange process can be used to remove a variety of pollutants from wastewater, including ammonia. Ion exchange involves passing ammonia-laden wastewater through a column that contains natural or synthetic ion exchange resins. A naturally occurring resin (or zeolite) known as clinoptilolite is commonly used. The columns are generally 4 – 5 feet in depth packed with 20 X 50 mesh particles. As wastewater passes though the column, ammonium ions in the wastewater are absorbed by the clinoptilolite. When the absorptive capacity of the resin is used up, the column is regenerated through a caustic wash, which releases the absorbed ammonium from the resin by converting it into ammonia, which is then removed through gas stripping. Clinoptilolite resin can also be regenerated using brine solution. When the brine is passed through the column, the sodium in the brine replaces the absorbed ammonium at the exchange sites of the resin. The brine can then be discarded or the ammonium can be removed and the brine can be reused to regenerate the column.

Ion exchange is generally considered an expensive method of ammonia removal. However, it is also very effective when properly employed. Because of plugging of the ion exchange resin by bio-slimes, this method is generally only applied to high quality secondary effluents that have been filtered and disinfected.

Operational Control of Nitrification/ Denitrification

The two part process of biological nitrogen removal through nitrification/denitrification requires that ammonia if first converted into nitrite and then nitrate, and then that the nitrate be converted into nitrogen gas, which is released to the atmosphere.

Nitrification

The nitrification portion of biological nitrogen removal can be accomplished using either fixed film or suspended growth reactors. In either case, a sufficient quantity of oxygen and ample time is required for the microorganisms to carryout the process. No matter which type of reactor is used, the process must be operated in such a way that ammonia is oxidized completely to nitrate. If the process results in the formation of only nitrite but not nitrate, disinfection problems will result where chorine disinfection is employed. This is because nitrite exerts a high demand (2.5:1) as nitrite is oxidized to nitrate by chlorine.

Please note that a new approach to nitrogen removal is being employed that oxidizes ammonia to nitrite and then denitrifies the nitrite immediately without the creation of nitrate. This is accomplished biologically, all within the same aeration basin. The advantage to this new process is that significantly less oxygen is required. Control of the process can be difficult and requires on-line sensors and computer control of the aeration system.

Nitrification Process Modes

Fixed Film Processes

Nitrification in fixed film processes can be accomplished using a variety of treatment units. Fixed film processes have an advantage over suspended growth processes when it comes to nitrification, because the organisms responsible for nitrification prefer environments where they can attach to fixed surfaces. This allows nitrifiers to grow in stable colonies. Constructed wetlands, RBCs, fluidized beds, recirculating sand filters and trickling filters have all been used successfully for nitrification. Of these treatment units, trickling filters are most commonly employed and the following discussion is applicable mainly to the trickling filter process. However, many of the important points apply to all fixed film processes that are intended to nitrify.

Trickling filters (and all fixed film processes) provide BOD removal by converting soluble BOD into material that can be removed through solids separation (gravity settling or filtration). If nitrification is also a requirement, most of the BOD must be removed first. This is because the microorganisms responsible for nitrification cannot compete with the large numbers of Heterotrophic bacteria that form when a large BOD source is available for food. For this reason, dual stage trickling filters are often employed to provide BOD removal in the first stage and then nitrification in the second stage. BOD removal and nitrification can occur in the same trickling filter, with the BOD conversion occurring in the upper portion and nitrification in the lower portion of the filter media, but efficiency suffers.

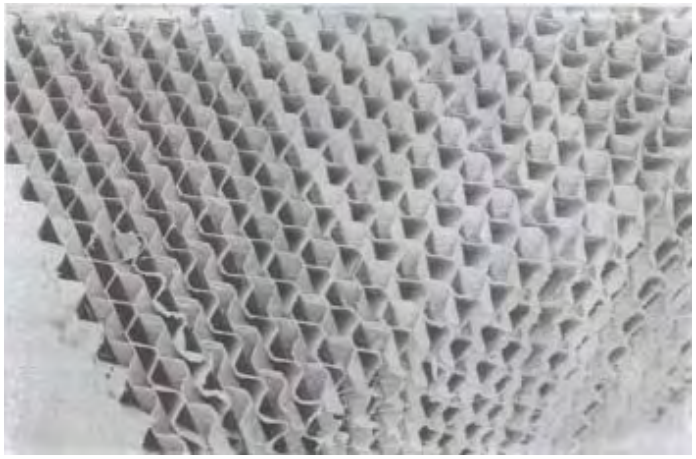

Figure 13.3 - *Plastic Media Used for "Trickling Filter" Type Nitrification*

Reprinted, with permission, from *Operation of Wastewater Treatment Plants*, Vol. III, 2nd ed., Office of Water Programs, California State University, Sacramento Foundation

Very low organic loadings (< 25 lbs. BOD/day/1000cuft of media) are necessary to allow the growth of nitrifying bacteria in the same filter with large numbers of Heterotrophs. Recirculation through the trickling filter is critical to maintaining efficient nitrification. Because the nitrifiers are sensitive to changes in their environment, the filter media must be kept wet at all times and sufficient dissolved oxygen must be maintained. Recirculation provides for both requirements. Recirculation rates of 50 – 200% (and higher) have been used for nitrification. Occasionally, forced air ventilation will be used to improve the nitrification rate of trickling filters.

Suspended Growth Processes

Activated sludge processes can be operated in a variety of modes. Not all modes of operation are conducive to nitrification. Conventional activated sludge lends itself well to nitrification because the plug flow through the basin allows for the assimilation of BOD by the Heterotrophs prior to the start of nitrification. Adequate detention times and dissolved oxygen levels must be maintained.

It is also of great importance to maintain a large enough population of nitrifiers in the system (higher SRT). This requires an increased solids inventory over that which is required for BOD removal alone. Extended aeration activated sludge has even greater advantage for nitrification due to long detention times and high sludge ages. Contact stabilization activated sludge generally does not provide for nitrification because of the high F:M that these systems operate at and the short detention times in the contact zone. Step feed activated sludge can be used for partial nitrification, however, because influent is introduced near the end of the aeration basin, ammonia can pass through without being fully oxidized to nitrate.

Nitrification Process Control

When an adequate population of nitrifiers is present, and suitable conditions of dissolved oxygen, alkalinity and temperature are maintained, nitrification systems are relatively easy to operate. The control of nitrification in a fixed film reactor depends mainly upon: (1) the recirculation rate, and (2) the applied loading. The control of nitrification in suspended growth reactors depends upon: (1) the SRT or MCRT, and (2) the dissolved oxygen levels. Temperature affects nitrifiers as it affects all biological activity. Colder temperatures slow the process.

For activated sludge, the detention time in the aeration basin must be at least 4 hours and preferably >8 hours. The typical MLVSS concentration required to maintain an active population of nitrifiers is > 1500 mg/L. Dissolved oxygen levels of 2 – 4 mg/L are typical for conventional activated sludge nitrification processes, while extended aeration plants typically need only 1 – 1.5 mg/L of D.O.

Alkalinity is consumed during the nitrification process at a rate of 7.2 parts of alkalinity for each part of ammonia oxidized. Because of this, alkalinity determinations (along with D.O. readings) offer one of the best day-to-day operational controls for nitrification. A drop in the pH of wastewater may or may not accompany nitrification, depending upon the alkalinity available and pH at the start of the process. Any wastewater containing less than 50 mg/L of alkalinity is likely to experience a significant drop in pH during nitrification.

If the pH drops below 6.5, nitrification will effectively cease. For this reason, it is sometimes necessary to add alkalinity in order to maintain nitrification. If you suspect that low alkalinity is inhibiting nitrification, investigate carefully before taking action. Remember that 24-hour composite samples can often mask fluctuating alkalinity and pH drops. If the pH drops low enough to inhibit nitrification, alkalinity will have to be added to the influent. Lime, soda ash and sodium hydroxide are the most commonly used chemicals that are added to increase alkalinity in nitrifying systems.

The optimum wastewater temperature for nitrification ranges from 15º - 30º C (60º – 95º F). Nitrification is inhibited at low temperatures, and as much as five times the detention time may be necessary to accomplish complete nitrification in the winter as opposed to the summer. Because there is no way to control the wastewater temperatures, operators must adjust other process parameters to compensate for the lower growth rate of the nitrifiers during low temperatures. Typically, increasing the MLVSS concentration, increasing the MCRT, and increasing the pH slightly are the methods used to accomplish this. Under warm weather conditions, nitrification will proceed at a lower pH, lower MCRTs and with lower MLVSS concentrations.

The growth of nitrifying organisms is affected by the nitrogenous load applied to the system. In fact, the population of nitrifiers will be limited by the concentration of ammonia in the influent. Organic nitrogen, phosphorous and trace elements are essential for the growth of the microorganisms in any nitrifying system. The generally recommended BOD to nitrogen to phosphorous ratio is 100:5:1 for BOD reduction alone. In nitrifying systems, ratios containing significantly more nitrogen can be treated. If any of these constituents is not available in sufficient quantities, treatment will suffer.

In some circumstances, it is only necessary to nitrify ammonia into nitrate. For example, for a treatment plant that discharges into a large river, ammonia toxicity may be a problem but nutrient loading may not. Under this

TABLE 13.3 NITRIFICATION TROUBLESHOOTING GUIDE

(Adapted from *PERFORMANCE EVALUATION AND TROUBLESHOOTING AT MUNICIPAL WASTEWATER TREATMENT FACILITIES*, Office of Water Program Operations, U.S. EPA, Washington, DC.)

INDICATOR/OBSERVATION	PROBABLE CAUSE	CHECK OR MONITOR	SOLUTION
1. Decrease in nitrification unit pH with loss of nitrification.	1a. Need more alkalinity to offset nitrification acidic effects.	1a. Alkalinity in effluent from nitrification unit.	1a. If alkalinity is less than 10 mg/*L*, start addition of lime or sodium hydroxide to nitrification unit.
	1b. Addition of acidic wastes to sewer system.	1b. Raw waste pH and alkalinity.	1b. Initiate source control.
2. Inability to completely nitrify.	2a. Oxygen concentrations are limiting nitrification.	2a. Minimum DO in nitrification unit should be 1 mg/*L* or more.	2a. Increase aeration supply or decrease organic (BOD) loading on nitrification unit.
	2b. Cold temperatures are limiting nitrification.	2b. Temperatures.	2b. Decrease organic loading on nitrification unit or increase biological population in nitrification unit. (Increase MCRT.)
	2c. Increases in total daily influent nitrogen loads have occurred.	2c. Current influent nitrogen concentrations.	2c. Place added nitrification units in service or modify pretreatment to remove more nitrogen.
	2d. Biological solids too low in nitrification unit.	2d. MCRT should be greater than 10 days; in cold temperatures it may need to be greater than 15 days.	2d. (1) Decrease organic loading on nitrification unit and decrease wasting or loss of sludge from nitrification unit. (2) Add settled raw wastewater (primary effluent) to nitrification unit to generate biological solids.
	2e. Peak hourly ammonium concentrations exceed available oxygen supply.	2e. Ammonium concentrations.	2e. Install flow equalization system to minimize peak concentrations or increase oxygen supply.
3. In two-stage activated sludge system, SVI (see Chapter 7, Section 7.3) of nitrification sludge is very high (greater than 250).	3. Nitrification is occurring in first stage.	3. Nitrate in first stage effluent.	3. Transfer sludge from first stage to second and maintain lower MCRT in first stage.
4. Loss of solids from final clarifier.	4. (See activated sludge and sedimentation/flotation chapters, *OPERATION OF WASTEWATER TREATMENT PLANTS*, Volumes I and II.)		
5. Loss of solids from trickling filter or RBC.	5. (See trickling filter and RBC chapters, *OPERATION OF WASTEWATER TREATMENT PLANTS*, Volume I.)		

Reprinted, with permission, from *Operation of Wastewater Treatment Plants*, Vol. III, 2nd ed., Office of Water Programs, California State University, Sacramento Foundation

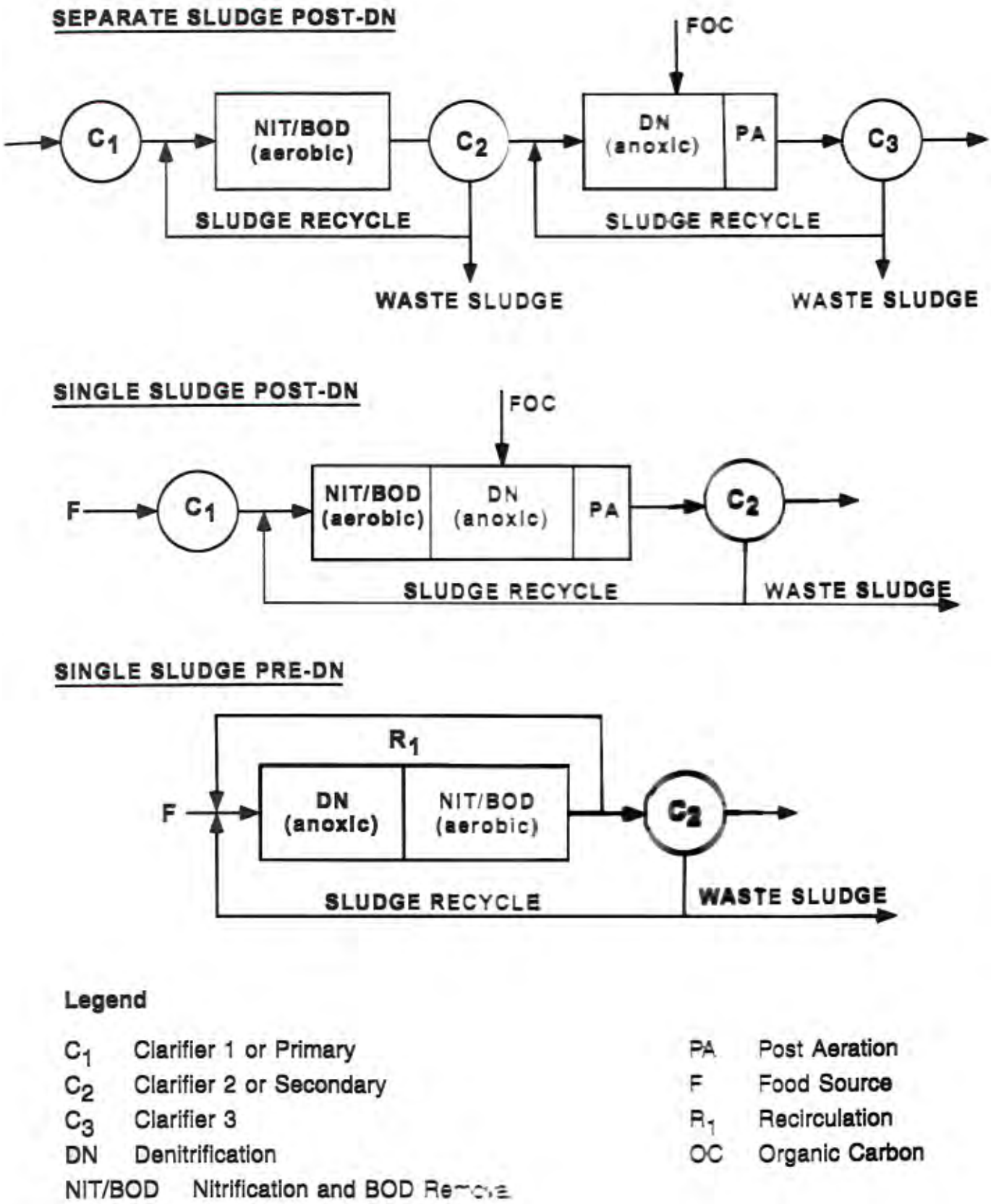

Figure 13.4 - ***Nitrification and Denitrification Using Suspended Growth Reactors***

Reprinted, with permission, from *Operation of Wastewater Treatment Plants*, Vol. III, 2nd ed., Office of Water Programs, California State University, Sacramento Foundation

TABLE 13.4 DENITRIFICATION TROUBLESHOOTING GUIDE

(Adapted from *PERFORMANCE EVALUATION AND TROUBLESHOOTING AT MUNICIPAL WASTEWATER TREATMENT FACILITIES*, Office of Water Program Operations, U.S. EPA, Washington, DC.)

INDICATOR/OBSERVATION	PROBABLE CAUSE	CHECK OR MONITOR	SOLUTION
1. Effluent COD shows sudden increase.	1. Excessive addition of methanol (or other oxygen-demanding material used).	1. Methanol dose.	1a. Reduce methanol addition. 1b. Install automated methanol feed system. 1c. Install aerated stabilization unit for removal of excess methanol.
2. Effluent nitrate shows sudden increase.	2a. Inadequate methanol addition.	2a. Methanol feed system malfunction.	2a. Correct malfunction.
	2b. pH has drifted outside 7-7.5 range due to low pH in nitrification stage.	2b. Alkalinity.	2b. Correct pH with addition of lime or soda ash to raise pH to 7-7.5 range.
	2c. Loss of solids from denitrifier due to failure of sludge return.	2c. Denitrifier unit solids and clarifier unit.	2c. Increase sludge return; decrease sludge wasting; transfer sludge from carbonaceous unit to denitrifier.
	2d. Excessive DO.	2d. Denitrifier DO should be as near zero as possible (less than 0.5 mg/L).	2d. Reduce DO level. Turn some mixers off or reduce speed of blowers.
3. High head loss across packed bed or fluidized bed denitrification units.	3a. Excessive solids accumulation in filter.	3a. Length of filter run—if 12 hours or more, this is the probable cause.	3a. Initiate full backwash cycle.
	3b. Nitrogen gas accumulating in filter.	3b. Run times of less than 12 hours indicate this may be the cause.	3b. Backwash bed for 1-2 minutes and return to service.
4. Packed bed or fluidized bed denitrifier that has been out of service blinds immediately upon start-up.	4. Solids have floated to top of bed and blind filter surface.	4. Solids on filter surface.	4. Backwash beds before removing them from service and immediately before starting them.

Reprinted, with permission, from *Operation of Wastewater Treatment Plants*, Vol. III, 2nd ed., Office of Water Programs, California State University, Sacramento Foundation

situation, the facility's discharge permit may limit the ammonia form of nitrogen in the discharge, but not limit nitrogen in other forms, such as nitrate. Simply converting the incoming ammonia into nitrate is sufficient to meet the permit limit for ammonia in this case. In many other situations, it is necessary to actually remove the nitrogen by finishing the nitrification/denitrification cycle.

Denitrification

The microorganisms involved in denitrification are much more varied and plentiful than those involved in nitrification. They are also much less sensitive to environmental changes than the nitrifiers. Systems that nitrify and denitrify have the advantage of regaining about 50% of the alkalinity lost during nitrification, because alkalinity is created as part of the denitrification process. Biological denitrification can be accomplished with both fixed film and suspended growth processes. In New Mexico, denitrification is typically performed using anoxic zones as an adaptation of the activated sludge process, although constructed wetlands cells, lagoons and even septic tanks have all been used to provide the anoxic conditions necessary to induce denitrification.

Denitrification Process Modes

Fixed Film Processes

The fluidized bed biological denitrification process works by passing wastewater through a bed of suitable media such as sand. As the wastewater moves through the bed, microorganisms attached to the media utilize the nitrate in the wastewater as a source of oxygen for metabolizing carbon compounds. Trickling filters and RBCs have been designed to provide for denitrification in a similar fashion, although these processes must be modified to exclude dissolved oxygen. As for all biological denitrification systems, a carbon food source must be supplied to promote metabolism by the denitrifying organisms. Primary effluent, methane gas, methanol or any other source of carbon can be used. In fixed film reactors, the carbon source can even be organic matter that is trapped in the reactor itself.

This use of a trapped carbon source for denitrification has been accomplished in constructed wetlands, although it is difficult to control and the success of the method is questionable. For all biological denitrification systems, dissolved oxygen must be excluded from the system; otherwise, the organisms will utilize any available D.O. rather than utilizing nitrate for cell metabolism. In general, fixed film systems are not as well suited to biological denitrification as suspended growth systems.

Suspended Growth Processes

Activated sludge can be modified quite easily to provide for biological denitrification. By creating an anoxic environment, where the mixed liquor and influent are kept in suspension, but not aerated, controlled denitrification can be achieved. There are many ways of achieving anoxic conditions in activated sludge systems. Perhaps one of the easiest is to simply shut off the aeration system for several hours to allow anoxic conditions to develop. If carefully timed, this method can denitrify the entire contents of an aeration basin. This approach has been applied successfully to package plants that need to denitrify for permit compliance.

Another approach to creating an anoxic environment is taken in the sequential batch reactor (SBR) process. SBRs operate much as activated sludge, with the exception that the entire treatment process, including clarification, takes place within a single reactor basin. While an SBR is aerating, mixing and filling with influent, the organisms in the reactor are assimilating BOD and nitrifying ammonia into nitrate.

Next, the aeration is turned off, but the mixing and filling with influent continues. During this phase, the microorganisms in the reactor continue to assimilate BOD. In doing so, they quickly utilize the available D.O (the basin becomes anoxic). Once the D.O. is exhausted, the facultative organisms turn to the oxygen bound up in nitrate as a source of oxygen that can be utilized and allow them to continue to metabolize BOD. SBRs often cycle between these two phases (aerobic and anoxic) several times before finally shutting off aeration and mixing so that the mixed liquor can settle and the clarified effluent can be decanted off and discharged. If the phases are carefully controlled, high levels of nitrogen and BOD removal can be achieved.

Recent development has lead to activated sludge plants that have special, dedicated anoxic zones, which provide for denitrification. Anoxic zones have been utilized at the beginning, in the middle and at the end of aeration basins. Some zones are simply a portion of the basin that is mixed but not aerated (common in oxidation ditches), while others are isolated areas, separated by walls or baffles. In either case, the intent is to provide an area where the mixed liquor and a carbon source (normally influent) can come together for a set detention time. While in the anoxic zone, the organisms are forced to turn to the oxygen bound up in nitrate as a source of oxygen to be used while metabolizing the BOD contained in the carbon source feed.

Often, mixed liquor is recycled through the anoxic zone in order to denitrify the nitrate contained within it. This form of mixed liquor recycle is also used to maintain the desired

detention time within the anoxic zone, which is typically around 1 – 2 hours. Excessive detention times in the anoxic zone can overstress the non-facultative organisms (like the nitrifying bacteria), and so must be avoided or the nitrification side of the process will suffer.

When anoxic zones are located at the beginning of an aeration basin, another benefit is realized. In an anoxic zone located at the head of an aeration basin, the facultative organisms rapidly take up the easy to assimilate organic matter (soluble BOD) contained in the influent. This reaction results from the stress caused by the anoxic conditions. This rapid uptake of the easy to assimilate organic matter robs many filamentous type bacteria of their main food source; soluble BOD. As a result, an anoxic zone operating in this fashion will actually *select* against the growth of many types of filamentous organisms. For this reason, anoxic zones situated at the front of an aeration basin are often referred to as anoxic selectors, or bio-selectors. Selectors of this type offer the most powerful long-term tool for combating filamentous organisms available to operators.

It is important to understand that the effect does not work on all types of filamentous organisms. Much to the regret of many an operator, the filamentous organism Microthrix Parvicella does not respond to the selector effect. In addition, other filaments are only slightly selected against or are not affected at all.

Denitrification Process Control

The control of any biological denitrification process centers around three things: (1) excluding dissolved oxygen, (2) maintaining the proper detention time, and (3) ensuring an adequate carbon source to drive the organisms to denitrify.

A D.O. meter is one of the most useful tools for troubleshooting denitrification systems. If any D.O. (>0.1 mg/L) is allowed to exist in the anoxic zone, denitrification will be hampered. Checking for the presence of dissolved oxygen with an accurately calibrated D.O. meter is one of the most fundamental process control checks.

The detention time in the anoxic zone should be around 1 – 2 hours in order to ensure adequate denitrification. Detention times lower than 1 hour usually do not allow enough time for the complete utilization of any residual D.O. and for complete denitrification. Detention times that are excessive will overstress or even kill the strict aerobes in the system. The most sensitive obligate aerobes are the nitrifying bacteria. If they are killed off due to excessively long anoxic exposure, the entire nitrogen removal process will fail. Mixed liquor recycling is used to maintain the desired detention times for separate sludge systems and pre-denitrification systems.

Figure 13.4 shows the typical configurations for separate sludge post-denitrification, single sludge post-denitrification and for single sludge pre-denitrification. Of these configurations, single sludge pre-denitrification is the most common in New Mexico. Furthermore, single sludge pre-denitrification has the additional advantage of exerting the selector effect against susceptible filamentous bacteria.

For SBRs, the denitrification detention time is a function of the length of the anoxic phase, which can be adjusted by the operator. It is often necessary to increase the length of the anoxic phase of an SBR during the winter months, when cold temperatures make oxygen easier to dissolve and slow the metabolism of the microbes. Conversely, the length of the anoxic phase can often be shortened during warm weather.

Ensuring an adequate source of carbon is generally not a problem, because the influent contains all of the carbon that is needed to drive the denitrification process. However, for some configurations (particularly separate sludge post-denitrification), it may be necessary to add a additional carbon source. In the past, methanol was used for this purpose, however, the cost and complication of methanol injection almost always make the use of influent as a carbon source much more desirable.

References

Office of Water Programs, California State University, Sacramento, *Operation of Wastewater Treatment Plants*, Volume III, 2nd ed., chapter 21