NEW MEXICO
ENVIRONMENT DEPARTMENT

Surface Water Quality Bureau

Harold Runnels Building, N2050
1190 South St. Francis Drive (87505)
P.O. Box 5469, Santa Fe, NM 87502-5469
Phone (505) 827-0187 Fax (505) 827-0160
www.nmenv.state.nm.us

SUSANA MARTINEZ
Governor

JOHN A. SANCHEZ
Lieutenant Governor

DAVE MARTIN
Secretary

BUTCH TONGATE
Deputy Secretary

TOM SKIBITSKI
Acting Director
Resource Protection Division

CERTIFIED MAIL – RETURN RECEIPT REQUESTED

January 11, 2013

Mr. Ted Lundy, Administrator
Paa-Ko Communities Sewer Association
45 Storyteller Court
Sandia Park, NM 87047

Re: Minor Industrial, SIC 4952, NPDES Compliance Evaluation Inspection, Paa-Ko Wastewater Treatment Plant, NM0030724, January 10, 2013

Dear Mr. Lundy,

Enclosed, please find a copy of the report and check list for the referenced inspection that the New Mexico Environment Department (NMED) conducted at your facility on behalf of the U.S. Environmental Protection Agency (USEPA). This inspection report will be sent to the USEPA in Dallas for their review. These inspections are used by USEPA to determine compliance with the National Pollutant Discharge Elimination System (NPDES) permitting program in accordance with requirements of the federal Clean Water Act.

Introduction, treatment scheme, and problems noted during this inspection are discussed in the Further Explanations section of the inspection report. You are encouraged to review the inspection report, required to correct any problems noted during the inspection, and to modify your operational and/or administrative procedures, as appropriate.

I wish to thank you for the cooperation extended to the NMED personnel by Mike Butler while at the Paa-Ko Wastewater Treatment Plant. If you have any questions about this inspection report, please contact me at (505) 222-9587 or sarah.holcomb@state.nm.us.

Sincerely,
/s/ Sarah Holcomb
Sarah Holcomb
Environmental Scientist/Specialist
NMED Surface Water Quality Bureau

Cc: Hannah Branning, USEPA (6EN-AS) by e-mail
Darlene Whitten-Hill, USEPA (6EN-AS) by e-mail
Rashida Bowlin, USEPA (6EN-AS) by e-mail
Carol Peters-Wagnon, USEPA (6EN-WM) by e-mail
Diana McDonald, USEPA (6EN-WM) by e-mail
Larry Giglio, USEPA (6EN-P) by e-mail
William Chavez, NMED District 1 Manager (by e-mail)
Cynthia Arnold, Epcor (by e-mail)

Form Approved
OMB No. 2040-0003
Approval Expires 7-31-85

NPDES Compliance Inspection Report

Section A: National Data System Coding

Transaction Code	NPDES	yr/mo/day	Inspec. Type	Inspector	Fac Type
1 N 2 5 3	N M 0 0 3 0 7 2 4 11 12	1 3 0 1 1 0 17 18	C 19	S 20	1

Remarks

M I N O R W W T P

Inspection Work Days	Facility Evaluation Rating	BI	QA	Reserved
67 69	70 3 71	N 72	N 73 74	75 80

Section B: Facility Data

Name and Location of Facility Inspected *(For industrial users discharging to POTW, also include POTW name and NPDES permit number)*	Entry Time /Date	Permit Effective Date
PAA-KO WASTEWATER TREATMENT PLANT, SANDIA PARK, BERNALILLO COUNTY, NM: From Albuquerque, take I-40 East to the Cedar Crest Exit (Hwy 14). Follow Hwy 14 to Sandia Park (approx. 8 miles). Take the first entrance to Paa-Ko on Paa-Ko Drive. Plant entrance is at the intersection of Paa-Ko Drive and Kiva (approx. 1.3 miles from entrance) on the right.	0836 / 1-10-2013	5-1-2007
	Exit Time/Date 1000 / 1-10-2013	Permit Expiration Date 4-30-2012

Name(s) of On-Site Representative(s)/Title(s)/Phone and Fax Number(s)
Mr. Mike Butler, Field Supervisor, Epcor Water (505) 281-3294

Name, Address of Responsible Official/Title/Phone and Fax Number
Mr. Ted Lundy, Administrator, Paa-Ko Communities Sewer Association
45 Storyteller Ct., Sandia Park, NM 87047 (505) 254-2330

Contacted: Yes [ ] No [*]

Other Facility Data

GPS:
N. 35° 11' 43.43"
W -106° 18' 57.59"

SIC: 4952

Section C: Areas Evaluated During Inspection

(S = Satisfactory, M = Marginal, U = Unsatisfactory, N = Not Evaluated)

S	Permit	M	Flow Measurement	M	Operations & Maintenance	N	CSO/SSO
U	Records/Reports	N	Self-Monitoring Program	S	Sludge Handling/Disposal	N	Pollution Prevention
S	Facility Site Review	N	Compliance Schedules	N	Pretreatment	N	Multimedia
S	Effluent/Receiving Waters	N	Laboratory	N	Storm Water	N	Other:

Section D: Summary of Findings/Comments (Attach additional sheets if necessary)

1. **INSPECTOR ARRIVED AT THE FACILITY AT 0836 HOURS ON JANUARY 10, 2013. THE INSPECTOR CONDUCTED AN ENTRANCE INTERVIEW WITH MR. MIKE BUTLER, OPERATIONS FOREMAN, WHERE SHE MADE INTRODUCTIONS, PRESENTED CREDENTIALS AND EXPLAINED THE PURPOSE OF THE INSPECTION.**
2. **PLEASE SEE REPORT FOR FURTHER EXPLANATIONS.**
3. **AN EXIT INTERVIEW TO DISCUSS THE PRELIMINARY FINDINGS OF THE INSPECTION WAS CONDUCTED WITH MR. BUTLER AT THE FACILITY AT APPROXIMATELY 0955 HOURS ON JANUARY 10, 2013.**

Name(s) and Signature(s) of Inspector(s)	Agency/Office/Telephone/Fax	Date
Sarah Holcomb ***/s/ Sarah Holcomb***	**505-222-9587**	**1-11-2013**
Signature of Management QA Reviewer	**Agency/Office/Phone and Fax Numbers**	**Date**
Richard Powell ***/s/ Richard Powell***	**505-827-2798**	**1-11-2013**

PAA-KO Communities WWTP	PERMIT NO. NM0030724

SECTION A - PERMIT VERIFICATION

PERMIT SATISFACTORILY ADDRESSES OBSERVATIONS X S ¨ M ¨ U ¨ NA (*FURTHER EXPLANATION ATTACHED YES*)
DETAILS: PERMIT EXPIRED 4-2012. PERMIT APPLICATION RECEIVED BY EPA 11-8-2011. PERMIT HAS BEEN ADMINISTRATIVELY CONTINUED.

1. CORRECT NAME AND MAILING ADDRESS OF PERMITTEE	X Y ¨ N ¨ NA
2. NOTIFICATION GIVEN TO EPA/STATE OF NEW DIFFERENT OR INCREASED DISCHARGES	O Y ¨ N X NA
3. NUMBER AND LOCATION OF DISCHARGE POINTS AS DESCRIBED IN PERMIT	X Y ¨ N ¨ NA
4. ALL DISCHARGES ARE PERMITTED	X Y ¨ N ¨ NA

SECTION B - RECORDKEEPING AND REPORTING EVALUATION

RECORDS AND REPORTS MAINTAINED AS REQUIRED BY PERMIT. O S ¨ M X U ¨ NA (*FURTHER EXPLANATION ATTACHED YES*)
DETAILS:

1. ANALYTICAL RESULTS CONSISTENT WITH DATA REPORTED ON DMRs.	O Y ¨ N X NA
2. SAMPLING AND ANALYSES DATA ADEQUATE AND INCLUDE.	O S ¨ M ¨ U X NA
a) DATES, TIME(S) AND LOCATION(S) OF SAMPLING	O Y ¨ N X NA
b) NAME OF INDIVIDUAL PERFORMING SAMPLING	O Y ¨ N X NA
c) ANALYTICAL METHODS AND TECHNIQUES.	O Y ¨ N X NA
d) RESULTS OF ANALYSES AND CALIBRATIONS.	O Y ¨ N X NA
e) DATES AND TIMES OF ANALYSES.	O Y ¨ N X NA
f) NAME OF PERSON(S) PERFORMING ANALYSES.	O Y ¨ N X NA
3. LABORATORY EQUIPMENT CALIBRATION AND MAINTENANCE RECORDS ADEQUATE.	O S ¨ M X U ¨ NA
4. PLANT RECORDS INCLUDE SCHEDULES, DATES OF EQUIPMENT MAINTENANCE AND REPAIR.	X S ¨ M ¨ U ¨ NA
5. EFFLUENT LOADINGS CALCULATED USING DAILY EFFLUENT FLOW AND DAILY ANALYTICAL DATA.	O Y ¨ N X NA

SECTION C - OPERATIONS AND MAINTENANCE

TREATMENT FACILITY PROPERLY OPERATED AND MAINTAINED. ¨ S X M ¨ U ¨ NA (*FURTHER EXPLANATION ATTACHED YES*)
DETAILS:

1. TREATMENT UNITS PROPERLY OPERATED.	X S ¨ M O U ¨ NA
2. TREATMENT UNITS PROPERLY MAINTAINED.	¨ S X M O U ¨ NA
3. STANDBY POWER OR OTHER EQUIVALENT PROVIDED .	X S ¨ M O U ¨ NA
4. ADEQUATE ALARM SYSTEM FOR POWER OR EQUIPMENT FAILURES AVAILABLE.	X S ¨ M O U ¨ NA
5. ALL NEEDED TREATMENT UNITS IN SERVICE	X S ¨ M O U ¨ NA
6. ADEQUATE NUMBER OF QUALIFIED OPERATORS PROVIDED.	X S ¨ M O U ¨ NA
7. SPARE PARTS AND SUPPLIES INVENTORY MAINTAINED.	X S ¨ M ¨ U ¨ NA
8. OPERATION AND MAINTENANCE MANUAL AVAILABLE.	X Y ¨ N ¨ NA
STANDARD OPERATING PROCEDURES AND SCHEDULES ESTABLISHED.	X Y O N ¨ NA
PROCEDURES FOR EMERGENCY TREATMENT CONTROL ESTABLISHED.	O Y X N ¨ NA

PAA-KO Communities WWTP	PERMIT NO. NM0030724

SECTION C - OPERATIONS AND MAINTENANCE (CONT'D)

9. HAVE BYPASSES/OVERFLOWS OCCURRED AT THE PLANT OR IN THE COLLECTION SYSTEM IN THE LAST YEAR?	O Y X N ¨ NA
IF SO, HAS THE REGULATORY AGENCY BEEN NOTIFIED?	O Y ¨ N X NA
HAS CORRECTIVE ACTION BEEN TAKEN TO PREVENT ADDITIONAL BYPASSES/OVERFLOWS?	O Y O N X NA
10.HAVE ANY HYDRAULIC OVERLOADS OCCURRED AT THE TREATMENT PLANT?	¨ Y X N ¨ NA
IF SO, DID PERMIT VIOLATIONS OCCUR AS A RESULT?	¨ Y ¨ N X NA

SECTION D - SELF-MONITORING

PERMITTEE SELF-MONITORING MEETS PERMIT REQUIREMENTS. ¨ S ¨ M ¨ U X NA *(FURTHER EXPLANATION ATTACHED no).*
DETAILS: Permittee has not discharged since the last inspection.

1. SAMPLES TAKEN AT SITE(S) SPECIFIED IN PERMIT.	O Y ¨ N X NA
2. LOCATIONS ADEQUATE FOR REPRESENTATIVE SAMPLES.	O Y ¨ N X NA
3. FLOW PROPORTIONED SAMPLES OBTAINED WHEN REQUIRED BY PERMIT.	O Y ¨ N X NA
4. SAMPLING AND ANALYSES COMPLETED ON PARAMETERS SPECIFIED IN PERMIT.	O Y ¨ N X NA
5. SAMPLING AND ANALYSES PERFORMED AT FREQUENCY SPECIFIED IN PERMIT.	O Y ¨ N X NA
6. SAMPLE COLLECTION PROCEDURES ADEQUATE	O Y ¨ N X NA
a) SAMPLES REFRIGERATED DURING COMPOSITING.	O Y ¨ N X NA
b) PROPER PRESERVATION TECHNIQUES USED.	O Y ¨ N X NA
c) CONTAINERS AND SAMPLE HOLDING TIMES CONFORM TO 40 CFR 136.3.	O Y ¨ N X NA
7. IF MONITORING AND ANALYSES ARE PERFORMED MORE OFTEN THAN REQUIRED BY PERMIT, ARE THE RESULTS REPORTED IN PERMITTEE'S SELF-MONITORING REPORT?	O Y ¨ N X NA

SECTION E - FLOW MEASUREMENT

PERMITTEE FLOW MEASUREMENT MEETS PERMIT REQUIREMENTS. ¨ S X M ¨ U ¨ NA *(FURTHER EXPLANATION ATTACHED YES)*
DETAILS:

1. PRIMARY FLOW MEASUREMENT DEVICE PROPERLY INSTALLED AND MAINTAINED. TYPE OF DEVICE In-line totalizer	X Y ¨ N ¨ NA
2. FLOW MEASURED AT EACH OUTFALL AS REQUIRED.	X Y ¨ N ¨ NA
3. SECONDARY INSTRUMENTS (TOTALIZERS, RECORDERS, ETC.) PROPERLY OPERATED AND MAINTAINED.	X Y ¨ N ¨ NA
4. CALIBRATION FREQUENCY ADEQUATE.	X Y ¨ N ¨ NA
RECORDS MAINTAINED OF CALIBRATION PROCEDURES.	O Y X N ¨ NA
CALIBRATION CHECKS DONE TO ASSURE CONTINUED COMPLIANCE.	O Y X N ¨ NA
5. FLOW ENTERING DEVICE WELL DISTRIBUTED ACROSS THE CHANNEL AND FREE OF TURBULENCE.	X Y ¨ N ¨ NA
6. HEAD MEASURED AT PROPER LOCATION.	X Y ¨ N ¨ NA
7. FLOW MEASUREMENT EQUIPMENT ADEQUATE TO HANDLE EXPECTED RANGE OF FLOW RATES.	X Y ¨ N ¨ NA

SECTION F – LABORATORY

PERMITTEE LABORATORY PROCEDURES MEET PERMIT REQUIREMENTS. O S ¨ M ¨ U X NA *(FURTHER EXPLANATION ATTACHED YES)*
DETAILS: Permittee does not keep lab equipment on site. In the event of a discharge, representatives from Hall Environmental would be called out to collect samples and run pH.

1. EPA APPROVED ANALYTICAL PROCEDURES USED *(40 CFR 136.3 FOR LIQUIDS, 503.8(b) FOR SLUDGES)*	O Y ¨ N X NA

SECTION F - LABORATORY (CONT'D)

2. IF ALTERNATIVE ANALYTICAL PROCEDURES ARE USED, PROPER APPROVAL HAS BEEN OBTAINED ¨ Y ¨ N X NA

3. SATISFACTORY CALIBRATION AND MAINTENANCE OF INSTRUMENTS AND EQUIPMENT. O S O M ¨ U X NA

4. QUALITY CONTROL PROCEDURES ADEQUATE. O S ¨ M ¨ U X NA

5. DUPLICATE SAMPLES ARE ANALYZED. 100 % OF THE TIME. O Y ¨ N X NA

6. SPIKED SAMPLES ARE ANALYZED. ___ % OF THE TIME. ¨ Y ¨ N X NA

7. COMMERCIAL LABORATORY USED. X Y ¨ N ¨ NA

LAB NAME Hall Environmental Labs

LAB ADDRESS 4901 Hawkins St. NE, Albuquerque, NM 87109

PARAMETERS PERFORMED BOD, NH_3, TKN, TSS, NO_3, *E. coli*

SECTION G - EFFLUENT/RECEIVING WATERS OBSERVATIONS. X S ¨ M O U ¨ NA *(FURTHER EXPLANATION ATTACHED YES).*

OUTFALL NO.	OIL SHEEN	GREASE	TURBIDITY	VISIBLE FOAM	FLOAT SOL.	COLOR	OTHER
001	No Discharge	No Discharge	No Discharge	No Discharge	No Discharge	No Discharge	

RECEIVING WATER OBSERVATIONS Permittee has submitted a request to change their existing outfall to another location (between the facility and the primary discharge pond). Currently, the discharge first enters a six million gallon retention pond (lined), and then fills a pond on the community golf course, which is supplemented with a ground water supply. A discharge through a standpipe from the golf course pond would then be subject to NPDES limitations, as the administratively continued permit is currently written.

SECTION H - SLUDGE DISPOSAL

SLUDGE DISPOSAL MEETS PERMIT REQUIREMENTS. X S ¨ M ¨ U ¨ NA *(FURTHER EXPLANATION ATTACHED NO).*
DETAILS:

1. SLUDGE MANAGEMENT ADEQUATE TO MAINTAIN EFFLUENT QUALITY. X S ¨ M ¨ U ¨ NA

2. SLUDGE RECORDS MAINTAINED AS REQUIRED BY 40 CFR 503. O S ¨ M ¨ U X NA

3. FOR LAND APPLIED SLUDGE, TYPE OF LAND APPLIED TO: N/A (e.g., FOREST, AGRICULTURAL, PUBLIC CONTACT SITE)

SECTION I - SAMPLING INSPECTION PROCEDURES *(FURTHER EXPLANATION ATTACHED ___).*

1. SAMPLES OBTAINED THIS INSPECTION. ¨ Y X N ¨ NA

2. TYPE OF SAMPLE OBTAINED

GRAB _____ COMPOSITE SAMPLE ___ METHOD _____ FREQUENCY

3. SAMPLES PRESERVED. ¨ Y ¨ N ¨ NA

4. FLOW PROPORTIONED SAMPLES OBTAINED. ¨ Y ¨ N ¨ NA

5. SAMPLE OBTAINED FROM FACILITY'S SAMPLING DEVICE. ¨ Y ¨ N ¨ NA

6. SAMPLE REPRESENTATIVE OF VOLUME AND MATURE OF DISCHARGE. ¨ Y ¨ N ¨ NA

7. SAMPLE SPLIT WITH PERMITTEE. ¨ Y ¨ N ¨ NA

8. CHAIN-OF-CUSTODY PROCEDURES EMPLOYED. ¨ Y ¨ N ¨ NA

9. SAMPLES COLLECTED IN ACCORDANCE WITH PERMIT. ¨ Y ¨ N ¨ NA

Compliance Evaluation Inspection
Paa-Ko Communities Wastewater Treatment Plant
NPDES Permit No. NM0030724

Introduction

On January 10, 2013, Sarah Holcomb of the New Mexico Environment Department (NMED), Surface Water Quality Bureau (SWQB) conducted a Compliance Evaluation Inspection (CEI) at the Paa-Ko Wastewater Treatment Plant (WWTP). The Paa-Ko WWTP has a design flow capacity of 0.10 MGD (million gallons per day) and is classified as a minor industrial discharger under the Federal Clean Water Act, Section 402, of the National Pollutant Discharge Elimination System (NPDES) permit program. It is assigned NPDES permit number NM0030724. This permit regulates the WWTP discharge to San Pedro Creek in the Rio Grande Basin in Segment 20.6.4.125 according to the *State of New Mexico Standards for Interstate and Intrastate Surface Waters, 20.6.4 NMAC*. This segment includes the designated uses of coldwater aquatic life, irrigation watering, wildlife habitat and secondary contact.

The NMED performs a certain number of CEIs for the U.S. Environmental Protection Agency (USEPA), Region VI, under the NPDES permit program, in accordance with the Federal Clean Water Act. USEPA uses these inspections to determine compliance with the NPDES permit program. This inspection report is based on information provided by the permittee's representatives, observations made by the NMED inspector, and records and reports kept by the permittee and/or NMED.

Upon arrival at the WWTP at 0836 hours on January 10, 2013, the inspector conducted an entrance interview with Mr. Mike Butler, Operations Foreman for Epcor, where she made introductions, presented credentials and explained the purpose of the inspection. Mr. Butler conducted a tour of the facility. An exit interview was conducted with Mr. Butler at the facility at approximately 1000 hours on January 10, 2013 to present the preliminary findings of the inspection.

Treatment Scheme

This facility was previously a subsurface flow constructed wetland with infiltration beds. It was retrofitted with a membrane bioreactor (MBR) microfiltration system and became functional in December 2007. The wastewater treatment plant serves about 345 homes at the time of this inspection. This facility has a total of 9 lift stations, which each have their own alarm in the event of an emergency. The inflow passes through a storage tank of 22,000 gallons which is kept empty to provide an approximately 12 hour emergency storage capacity (the plant is not using the entire design flow capacity). The collection system drains residential septic systems, which are primarily used as small settling basins. After final grit removal and filtration at the WWTP, the influent then flows to an anoxic basin where denitrification takes place. From the anoxic basin, influent then enters a MBR microfiltration basin. Through the use of a permeate pump, a vacuum is applied to a header connected to the membranes. The vacuum draws treated water through the hollow fiber ultrafiltration membranes. Permeate is then directed to the UV disinfection unit. Intermittent air flow is introduced to the bottom of the membrane module, producing turbulence that scours the external surface of the hollow fibers. This scouring action transfers rejected solids away from the membrane surface. The system is controlled by a programmable logic controller (SCADA) system, which if necessary, can be manually operated. If a system malfunction or power outage problem occurs, the system will call the operators. There is a back up call system in place if the primary system fails. The outside UV system is not connected to the programmable logic system, but plans are in the works to remedy this. Effluent flows to a lined pond for storage, or can be pumped directly to the Paa-Ko Ridge golf course pond. The only time the facility would utilize the NPDES permit for a discharge to surface water would be if the golf course pond overflowed.

The Paa-Ko Sewer Association contracts Epcor Water to operate the facility on their behalf. Representatives from Epcor Water were on-site during this inspection.

Sludge Management

The mixed liquor concentration (MLSS) for this type of system can run from 8,000 to 35,000 mg/L (but is optimally run between 12-18,000 mg/L). The wasting is infrequent (1-2 times per quarter) and is accomplished by contracting a septic hauler to pump solids directly out of the MBR basin. The pumped sludge is then hauled to the Albuquerque Water Reclamation Facility.

Further Explanations

Note: The sections are arranged according to the format of the enclosed EPA Inspection Checklist (Form 3560-3), rather than being ranked in order of importance.

Section A – Permit Verification Evaluation – Overall rating of *Satisfactory*

The permit requires in the footnote of Part I.A (*1):

The permittee shall install effluent flow meter downstream from the Golf Course pond and upstream from the arroyo to monitor the flow(s). The flow(s) must be monitored and reported for Outfall 001 when discharge occurs.

In 40 CFR Part 122.21 (d)(1), it states:

Any POTW with a currently effective permit shall submit a new application at least 180 days before the expiration date of the existing permit, unless permission for a later date has been granted by the Director.

Findings for Permit Verification:

The prior two inspections of this facility found that the outfall from the facility may not be in the appropriate place to adequately monitor the discharge. The facility is set up so that the effluent travels through the UV system and is discharged to the golf course pond at the Paa-Ko golf course. A discharge occurs when the pond overflows. Please see Photo #3. The effluent flow meter is located on the pipe leaving the golf course pond, which goes to the unnamed ephemeral arroyo, and then to San Pedro Creek. The wastewater treatment plant has no control over any chemicals that may enter the effluent from the pond itself (i.e. pesticides, herbicides, etc.) and during priority pollutant testing for NPDES permit reapplication, these substances are evaluated. There is a sampling port directly after the UV system, so it is possible to consider the discharge from the UV system the final outfall. The discharge from the golf course pond does not accurately reflect the discharge from the wastewater treatment plant as it is greatly diluted with the groundwater that the pond is supplemented with. The permittee's representative indicated that the wastewater treatment plant provides about 40,000 gallons of water per day for irrigation purposes, but the golf course needs about a million gallons per day to meet its watering needs.

The facility's permit expired on April 30, 2012. Paa-Ko submitted a permit reapplication which was received by EPA on November 8, 2011. A new permit has not yet been issued, but the previous permit has been administratively continued. The facility did submit a request to change the outfall location on the new permit. The new outfall would be located after the UV system discharge, prior to disposal into the 6 million gallon lined retention pond.

Section B – Recordkeeping and Reporting Evaluation – Overall rating of *Unsatisfactory*

The permit requires in Part II.B.2:

Monitoring information shall be on Discharge Monitoring Report Form(s) EPA 3320-1 as specified in Part III.D.4 of this permit and shall be submitted quarterly. Each quarterly submittal shall include separate forms for each month of the reporting period.

In Part II.B.2.c, No Discharge Reporting, the permit states:

If there is no discharge at Outfall 001 during the sampling month, place an "X" in the NO DISCHARGE box located in the upper right corner of the Discharge Monitoring Report.

Findings for Recordkeeping and Reporting:

During review of the files in preparation for this inspection, it was noted that DMRs had not been submitted for this facility since July 2012. The inspector checked both in NMED's paper files and in EPA's online NetDMR system, which Paa-Ko received approval to use in August 2012. NMED's files contain paper DMRs for January, April, May and June 2012. A check of NetDMR did not show that any DMRs had been submitted for 2012 using that system. The facility's representative indicated that DMRs were submitted within the system and validated, and were waiting for signatures from a responsible board member.

The inspector requested to see records of flow maintenance calibration checks performed at the facility since 2007. The permittee's representative indicated that checks had been performed, however, no documentation was kept to support that claim. The inspector recommended that records be kept in the future to support a strong flow measurement system. This is especially important as flow measurement is the basis for all loading measurements taken within the facility.

Section C - Operations and Maintenance Evaluation – Overall rating of *Marginal*

The permit requires in Part III.B.3.a:

The permittee shall at all times properly operate and maintain all facilities and systems of treatment and control (and related appurtenances)which are installed or used by permittee as efficiently as possible and in a manner which will minimize upsets and discharges of excessive pollutants and will achieve compliance with the conditions of this permit.

Findings for Operations and Maintenance :

Although this is a well-run facility, staff still has to cope with extremely high TDS influent (~800 mg/L). This is most likely coming from the residents' water softening systems. The community is set up so that any discharges from a residence are first sent to a septic tank, which is used as a primary treatment system to settle out solids and other materials. However, the facility has directed residents to discharge the high TDS backwash water from their water softening systems to their septic leach fields to attempt to alleviate the problem. Facility representatives indicate that this is an ongoing process. The high TDS influent at the plant is destroying the influent mechanisms at the plant. During the last inspection, the operators had replaced the stainless steel of the solids separator at the headworks, and were still dealing with leaks from that piece of machinery. At this inspection, you could easily see the corrosion on that equipment, and the facility operators had just removed an auger due to damage and were waiting for repairs. The permittee's representative indicated that he had just met with representatives from Ovivo (engineering company specializing in wastewater treatment) the day prior to the inspection, and was in the process of trying to obtain approval from the sewer board to install a new basket strainer in the headworks. Attached please find the proposal to the Paa-Ko Sewer Association Board for replacement. Also, please see Photos #1 & 2.

There is an emergency generator onsite located at the main pump station. This generator has the ability to run "one of everything" (i.e. one blower, one aeration basin, etc., which is how the plant runs normally) in the event of an emergency. There is an adequate alarm system to immediately notify the operators of a problem at the plant, and there is the capability to retain twelve hours of influent in order to implement a fix.

Section E – Flow Measurement Evaluation – overall rating of *Marginal*

The permit states in Part III.C.6:

Appropriate flow measurement devices and methods consistent with accepted scientific practices shall be selected and used to ensure the accuracy and reliability of measurements of the volume of monitored discharges. The devices shall be installed, calibrated and maintained to insure that the accuracy of the measurements is consistent with the accepted capability of that type of device. Devices selected shall be capable of measuring flows with a maximum deviation of less than 10% from true discharge rates throughout the range of expected discharge volumes.

Findings for Flow Measurement:

During the discussion of flow measurement practices at the facility, the permittee's representative indicated that the inline flow totalizer installed at the plant (Promag) said that the device cannot be calibrated and if there was an error, the entire device would have to be uninstalled from the system and sent to the manufacturer. The facility staff allegedly do periodic calibration checks, about once per year, to ensure that the device is measuring within ±10% of actual rates; however, there was no documentation available at the time of the inspection to support this claim.

NMED/SWQB

Official Photograph Log
Photo # 1

Photographer: Sarah Holcomb	Date: 1-10-2013	Time: 0917 hours
City/County: Sandia Park, Bernalillo County		
Location: Paa-Ko Wastewater Treatment Plant		
Subject: Solids separator showing corrosion from high TDS (~800 mg/L) influent. The black plastic is covering an opening where an auger was just removed for repairs.		

NMED/SWQB

Official Photograph Log
Photo # 2

Photographer: Sarah Holcomb	Date: 1-10-2013	Time: 0917 hours
City/County: Sandia Park, Bernalillo County		
Location: Paa-Ko Wastewater Treatment Plant		
Subject: Auger just removed from solids separator in previous photo.		

NMED/SWQB

Official Photograph Log
Photo # 3

Photographer: Sarah Holcomb	Date: 1-10-2013	Time: 0948 hours
City/County: Sandia Park, Bernalillo County		
Location: Paa-Ko Wastewater Treatment Plant		
Subject: Effluent flow meter showing 81157 gallons. This meter is located downstream of the standpipe shown in the next photo.		

NMED/SWQB

Official Photograph Log
Photo # 4

Photographer: Sarah Holcomb	Date: 1-10-2013	Time: 0950 hours
City/County: Sandia Park, Bernalillo County		
Location: Paa-Ko Wastewater Treatment Plant		
Subject: Golf course pond prior to discharge. Effluent first enters a 6 million gallon capacity pond, which feeds this pond. Effluent enters the pond at the lower right hand corner of this photo. Overflow pipe (to NPDES discharge point) is the standpipe located at the lower left.		

Headworks Replacement Preliminary Design Proposal for Paa-Ko Wastewater Treatment Plant
November 19, 2012
To: Paa-Ko Communities Sewer Association
From: Souder Miller & Associates, Albuquerque Office

Proposal #1

Tefzel Lined Strainer
Model 72L
Harrington Industrial Plastics

Chris McKinley
Office Manager
Harrington Industrial Plastics
5311 Oakland Avenue NE
Albuquerque, NM, 87113
P: 505-797-5500 | F: 505-797-5525
E: cmckinley@hipco.com
www.harringtonplastics.com

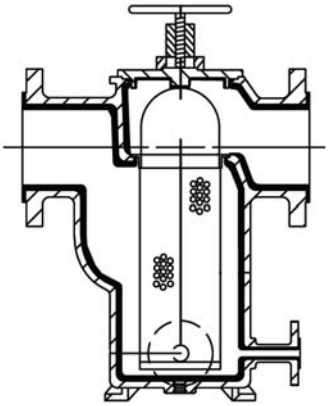

What was Proposed?
Harrington Plastics provided two proposals, both for basket strainers that would be placed in-line between the existing flange pipe fittings that currently connect into the failed Huber tank. Additional lined steel fittings would be required to connect the strainer to the existing piping. One proposal has 4” diameter nominal piping size and the other has 6” diameter nominal piping size. The 6” diameter is recommended because there is less headloss across the strainer. This equipment would have to be routinely opened up and the operator would have to manually remove the debris gathered on the screen. Frequency of debris removal would start at every few days and decrease as ideal frequency is determined based on removal interval and amount of debris removed. Strainer perforations are 2mm in diameter (5/64") as required by the Kubota membrane operation and maintenance manual. The tefzel lining on the interior of the strainer and the basket is a Teflon-derivative and is designed to withstand harsh corrosive environments. This closed system is simple, but does require maintenance.

Pricing

4” 72L Strainer 5/64” perf	$ 9,674.13 (not including Freight, Installation, or Lined Steel Fittings)
6” 72L Strainer 5/64” perf	$ 14,951.72 (not including Freight, Installation, or Lined Steel Fittings)

Lead Time
13 weeks

Headworks Replacement Preliminary Design Proposal for Paa-Ko Wastewater Treatment Plant
November 6, 2012
To: Paa-Ko Communities Sewer Association
From: Souder Miller & Associates, Albuquerque Office

Proposal #2

ROTAMAT & Micro Strainer
Huber Technology

Joshua J. Ziembiec
Huber Technology
9735 Northcross Center Court, Ste A
Huntersville, NC 28078
P: 704-949-1016
C: 704-650-8442
F: 704-949-1020
huber-technology.com

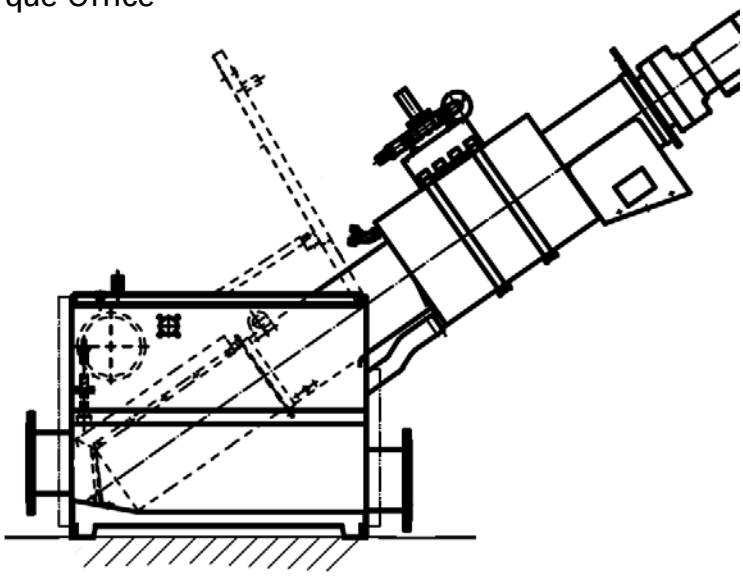

What was Proposed?
Huber created four proposals. Two proposals replace exactly what exists at the WWTP, with the microstrainer, ROTAMAT auger system, and a metal tank using upgraded stainless steel. The influent goes through the strainer and the debris is removed by the auger. The debris is placed in a trash bag strapped to the unit while the processed flow goes through the tank. The existing tank was made of 304 stainless steel, and Huber has proposed using 316 stainless steel, which is more corrosion-resistant than 304 stainless steel, or Duplex stainless steel, which is more corrosion-resistant than 316 stainless steel. The Duplex is recommended because it can withstand the chloride concentration in the wastewater, while the 316 would most likely just corrode at a slower rate than the existing failed Huber system.

The two other proposals have the microstrainer and ROTAMAT auger system, but eliminate the metal tank, requiring an open tank (or channel) of a different material to be constructed.

Pricing:

Duplex Stainless Steel with Tank	$ 77,143.00 (Not including Freight, Installation, or Fittings)
Duplex Stainless Steel without Tank	$ 69,229.00 (Not including Freight, Installation, or Fittings)
316 Stainless Steel with tank	$ 34,855.00 (Not including Freight, Installation, or Fittings)
316 Stainless Steel without tank	$ 31,294.00 (Not including Freight, Installation, or Fittings)

Lead Time
22-24 Weeks