New Mexico

Water Systems Operator

Certification Study Guide

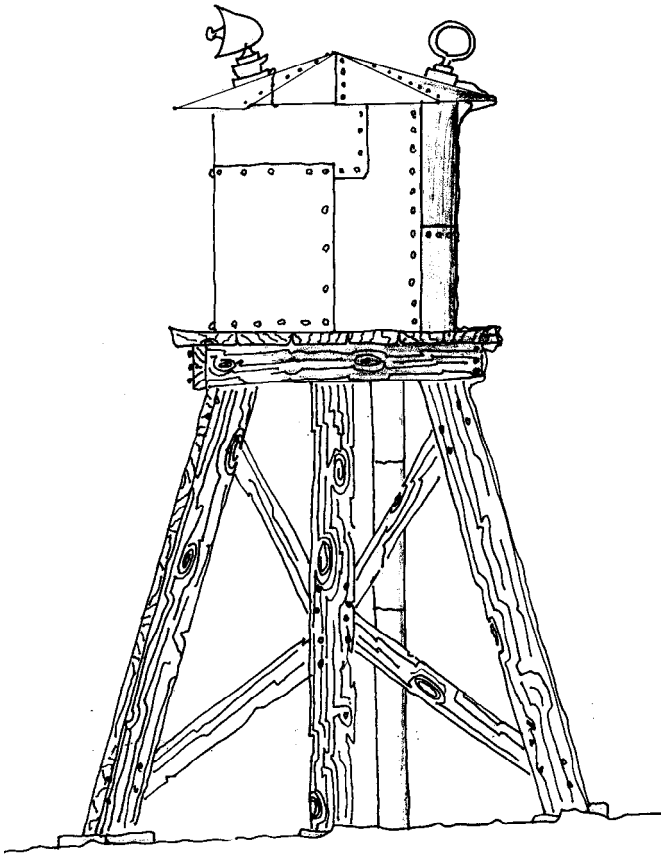

UTILITY OPERATORS' CERTIFICATION PROGRAM
Surface Water Quality Bureau
New Mexico Environment Department
PO Box 5469
Santa Fe, New Mexico USA 87502
www.nmenv.state.nm.us/swqb/UOCP

Blank Page

NEW MEXICO

WATER SYSTEMS OPERATOR

CERTIFICATION STUDY GUIDE

Version III

Prepared By

Ragsdale and Associates

For The

UTILITY OPERATORS' CERTIFICATION PROGRAM
Surface Water Quality Bureau
New Mexico Environment Department
PO Box 5496
Santa Fe, NM 87502

Blank Page

INTRODUCTION

This "WATER SYSTEMS OPERATOR CERTIFICATION STUDY GUIDE" has been created as a tool to assist Water Systems operators in New Mexico in preparation for taking the New Mexico Distribution Systems Operator, Small Water Systems Operator, and Water Systems Operator certification exams. There are three classes of Distribution Systems Operator certification, two classes of Small Water Systems Operator certification, and four classes of Water System Operator certification. This guide is not intended to be a complete reference manual for technical information. Its purpose is to guide the reader to study material for each of the major subject areas for each of the classes. There is no implied claim that this study guide covers every possible point on which an operator may be tested. However, it is intended to be comprehensive in its coverage of the essential information for each exam.

This study guide is divided into thirteen chapters. Each chapter in the study guide has basic and advanced study questions and sample test questions that are intended help the individual determine the type of information that is covered in an exam. Basic questions will generally cover information in the Small Water Systems exams and the Class 1 and 2 for Water Systems and Distribution Systems exams. Advanced questions will cover information in the Water Systems Class 3 and 4 and Distribution Systems Class 3 exams. The study questions and sample test questions are designed to direct the reader to exam information that is related to the chapter topics. There is only one correct answer for the Sample Test Questions. No answer sheet is provided. You will have to look them up.

Distribution Systems exams will include information from Chapters I-IV, VI-IX and XII-XIII.

Small Water Systems exam will include information from Chapters I-IV, VI-X, and XII.

Advanced Small Water Systems exam **will <u>also</u>** include information from Chapters V and XI.

Water Systems Class 1 exam will include information from Chapters I-III, VI-X, and XII-XIII.

Water System Class 2 exam will include information from Chapters I-X and XII-XIII.

Water Systems Class 3 and 4 exams will include information from all thirteen chapters.

The certification exams use several texts as reference manuals for exam topics. Each chapter of the study guide contains references to specific chapters of these manuals for those who wish to access more information on the topics covered in that particular section.

Sacramento, *Water Treatment Plant Operation*, 4th Edition, 1999, Volumes 1-2
Sacramento, *Small Water Systems O & M*, 4th Edition, 2001
Sacramento, *Water Distribution System O & M*, 4th Edition, 2000
Fletcher Driscoll/US Filter, *Groundwater and Wells*, 2nd Edition, 1986

Special thanks to: NMED Facility Operations Section for funding, Bob Padilla for his graphics, Bill Peifer for help with formatting and page numbers, the New Mexico Utility Operator Certification Advisory Board for chapter reviews, and everyone that helped to proof read the first draft for typos.

FRED RAGSDALE, RAGSDALE AND ASSOCIATES
JULY 5, 2002

NEW MEXICO ENVIRONMENT DEPARTMENT
SURFACE WATER QUALITY BUREAU
FACILITY OPERATIONS SECTION

The New Mexico Water Quality Control Commission, through the New Mexico Environment Department (NMED), grants certification for competency to the operators of water and wastewater systems. The Facility Operations Section (FOS) conducts the testing for certification. Certain requirements must be met before an operator is eligible to take a certification examination.

An operator begins the process by completing a test application from the Facility Operations Section. Applications will only be accepted if they are submitted at least 30 days prior to the exam date. A certification officer will review each application to determine if the operator is eligible to take the requested examination. An application must be submitted every time a test is taken. Examinations are given several times a year at various locations around the state. A **fee** of **$15.00** for **each** examination must be paid to **NMED Facility Operations Section**. A check or money order for the proper amount **must** accompany each exam application.

Certificates must be renewed every three years. The renewal date will be the last day of the certificate holder's birthmonth following the third anniversary of the certificate. The FOS also handles renewal of certificates. The **fee** for renewal is **$15.00** for **each** certificate.

The Facility Operations Section maintains training credits for certified operators only. Each operator must keep a record of all training credits earned. A record of current training credits is mailed to each certified operator yearly in July. Anyone who intends to apply for NM certification must include documentation of training credits when the application is submitted. Certified operators that are taking higher level exams may also have to submit training credit documentation to update training record files at the Facility Operations Section.

All correspondence, including applications, should be mailed to:

NMED Surface Water Quality Bureau
Facility Operations Section
PO Box 26110
Santa Fe, NM 87502

Please feel free to call the Facility Operations Section to request information on exam application forms, exam dates and locations, or certification and renewal. The telephone number for the office is **505-827-2804**.

IMPORTANT FACTS ABOUT OPERATOR CERTIFICATION

An operator, as defined by NM Water Quality Control Commission Regulations, is "any person employed by the owner as the person responsible for the operation of all or any portion of a water supply system or wastewater facility. Not included in this definition are such persons as directors of public works, city engineers, city managers, or other officials or persons whose duties do not include actual operation or direct supervision of water supply systems or wastewater facilities."

Under the Utility Operator Certification Act, "a certified operator is a person who is certified by the commission as being qualified to supervise or operate one of the classifications of water supply systems or wastewater facilities". Experience is "actual work experience, full or part-time, in the fields of public water supply or public wastewater treatment. Work experience in a related field may be accepted at the discretion of the commission". Any claim of related experience will be reviewed by the WQCC or its advisory body, the Utility Operators Certification Advisory Board.

The Advisory Board is an appointed "seven-member board from the certified water systems operators and wastewater facility operators to function with the commission to establish qualifications of operators, classify systems, adopt regulations and advise the administration of the Utility Operators Certification Act."

Experience that includes operation, maintenance or repair of water treatment and water distribution systems is accepted based on whether it is full or part-time. The Advisory Board will review and approve experience in other related fields, such as commercial plumbing or utility construction. Credit for part-time experience will be based on the percentage of time devoted to actual operation or maintenance. Full time water or wastewater laboratory experience may be counted as operator experience at a rate of 25% of actual experience. The credit for this experience will be determined by review of the Advisory Board.

BASIC CERTIFICATION REQUIREMENTS

There are three basic requirements an operator must meet to qualify for New Mexico certification. All certified operators must have at least **one year** of actual experience in operation or maintenance of a public water system. All levels of certification require **high school graduation or GED** (see substitutions.) All levels of certification require a certain number of **training credits** in water systems O&M or related fields.

BASIC CERTIFICATION REQUIREMENTS

	Experience	Training Credits	Education
Class 1/ Small Systems	1 year*	10	HS Grad or GED*
Class 2	2 years*	30	HS Grad or GED*
Class 3	4 years*	50	HS Grad or GED*
Class 4	1 year as Class 3	80	HS Grad or GED

* - See Substitutions

SUBSTITUTIONS

One year of additional experience may be substituted for the high school graduation or GED requirement for all classes **except** Class 4. Education may be substituted for experience or training credits in some cases. The education must be in a water or wastewater related field. One year of vocational education can be substituted for up to one year of experience. Associate's and Bachelor's degrees in a related field may be substituted for up to three years of experience and 50 training credit hours, depending on the amount of actual experience. The criteria for substitution of education for experience are as follows:

No more than one year (30 semester hours) of successfully completed college education in a **non-related field** may be substituted for an additional **six months** of the required experience.

One year of approved vocational school in the water and/or wastewater field may be substituted for only **one additional year** of the required experience.

An **associate's degree** for a two-year program in an approved school in the water and/or wastewater field and **six months** of actual experience in that field (which may be accrued before, during, or after the school program) may be substituted for the requirements of any level up to and including **Class 2**. An **associate's degree** for a two-year program in an approved school in the water and/or wastewater field and **twelve months** of actual experience in that field (which may be accrued before, during, or after the school program) may be substituted for the requirements of any level up to and including **Class 3**.

Completion of at least **three year**s of actual experience in the water and/or wastewater field plus **high school graduation** or equivalent, plus **15 semester hours** of successfully completed college education directly related to the water or wastewater field may be substituted for any level up to and including **Class 3**.

A **bachelor's degree** for a major directly related to the water or wastewater field plus **two years** of actual experience in that field may be substituted for any level up to and including **Class 3**.

NEW MEXICO WATER OPERATOR'S CERTIFICATION STUDY GUIDE

TABLE OF CONTENTS

CHAPTER I: INTRODUCTION TO WATER SYSTEMS

MEETING WATER SYSTEM DEMANDS	I-1
DOMESTIC WATER USAGE	I-1
INDUSTRIAL WATER USAGE	I-1
AGRICULTURAL WATER USAGE	I-1
PUBLIC WATER USAGE	I-2
SOURCES OF SUPPLY	I-2
MEETING WATER QUALITY STANDARDS	I-2
MEETING WATER CONSUMPTION AND PEAK DEMANDS	I-2
SEASONAL DEMANDS	I-2
DAILY PEAK DEMANDS	I-3
COMPONENTS OF A WATER SYSTEM	I-3
WATER SOURCES AND TREATMENT	I-3
DISTRIBUTION AND TRANSMISSION–WATER MAINS	I-3
SERVICES	I-3
PUMPS	I-3
STORAGE TANKS	I-4
CONTROLS	I-4
ISOLATION VALVES	I-4
CONTROL VALVES	I-4
SURGE TANKS	I-4
FIRE HYDRANTS	I-5
OPERATORS RESPONSIBILITY	I-5
STUDY QUESTIONS AND SAMPLE TEST QUESTIONS	I-5

CHAPTER II: SAFE DRINKING WATER ACT

PUBLIC WATER SYSTEMS	II-1
PRIMARY CONTAMINANTS	II-1
MAXIMUM CONTAMINANT LEVELS (MCL)	II-2
INORGANIC CONTAMINANTS	II-2
LEAD AND COPPER RULE	II-2
NITRATES	II-3
FLUORIDE	II-3
TURBIDITY	II-3
ORGANIC CONTAMINANTS	II-3
RADIOACTIVE CONTAMINANTS	II-4
BACTERIOLOGICAL CONTAMINANTS	II-4
SECONDARY CONTAMINANTS	II-4
MONITORING AND REPORTING	II-5
SAMPLING SCHEDULE	II-5

CHAPTER II: SAFE DRINKING WATER ACT (CONT.)

BACTERIOLOGICAL VIOLATIONS	II-6
PUBLIC NOTIFICATION	II-6
ACTION PLANS FOR VIOLATIONS	II-6
VARIANCES AND EXEMPTIONS	II-6
SURFACE WATER RULE	II-7
DISINFECTION–DISINFECTION BY-PRODUCTS RULE	II-7
STUDY QUESTIONS AND SAMPLE TEST QUESTIONS	II-7

CHAPTER III: WATER SAMPLING

NEW MEXICO WATER CONSERVATION FEE	III-1
WATERBORNE PATHOGENS	III-1
COLIFORM GROUP OF BACTERIA	III-2
SAMPLING SCHEDULES AND TECHNIQUES	III-2
SAMPLING SCHEDULES	III-2
SAMPLING TECHNIQUES	III-2
REPORTING AND SHIPPING CONSIDERATIONS	III-3
RETAKES AND VIOLATIONS	III-4
STUDY QUESTIONS AND SAMPLE TEST QUESTIONS	III-4

CHAPTER IV: DISINFECTION

CHLORINE GAS	IV-1
CHLORINE POWDER	IV-1
CHLORINE BLEACH	IV-1
CHLORINE TREATMENT TERMS	IV-2
CHLORINE DOSAGE	IV-2
CHLORINE DEMAND	IV-2
CHLORINE RESIDUAL	IV-2
FREE CHLORINE RESIDUAL	IV-3
COMBINED CHLORINE RESIDUAL	IV-3
DISINFECTION REQUIREMENTS	IV-3
EFFECTS OF TEMPERATURE AND PH	IV-3
BREAKPOINT CHLORINATION	IV-4
TESTING FOR CHLORINE RESIDUALS	IV-5
GENERAL CHLORINE SAFETY	IV-6
CHLORINATOR ROOM	IV-6
CHLORINE STORAGE	IV-7
CHLORINE CYLINDERS	IV-7
HTH HANDLING SAFETY	IV-8
RESPIRATORY PROTECTION	IV-8
GAS MASKS	IV-8

CHAPTER IV: DISINFECTION (CONT.)

SELF-CONTAINED BREATHING APPARATUS (SCBA)	IV-8
CHLORINATION EQUIPMENT	IV-9
GAS CHLORINATION	IV-9
HYPOCHLORINATION SYSTEMS	IV-12
EMERGENCY RESPONSE PROCEDURES	IV-13
STUDY QUESTIONS AND SAMPLE TEST QUESTIONS	IV-14

CHAPTER V: FLUORIDATION

FLUORIDE FEED SYSTEMS	V-1
SODIUM FLUORIDE SATURATORS	V-2
MONITORING FLUORIDE CONCENTRATIONS	V-2
STUDY QUESTIONS AND SAMPLE TEST QUESTIONS	V-3

CHAPTER VI: DISTRIBUTION SYSTEMS

PIPES	VI-1
CAST IRON AND DUCTILE IRON PIPE	VI-1
STEEL PIPE	VI-1
ASBESTOS-CEMENT PIPE	VI-2
POLYVINYL CHLORIDE PIPE	VI-2
SPECIAL CONSIDERATIONS FOR LAYING PVC PIPE	VI-2
BACKFILL CONSIDERATIONS	VI-3
PIPE PRESSURE RATINGS	VI-4
SEPARATIONS OF WATER AND SEWER LINES	VI-4
CLEANING WATER LINES	VI-4
WATER LINE REPAIRS	VI-5
LOCATING LEAKS	VI-5
REPAIRING THE LEAK	VI-6
DISINFECTION OF WATER LINES	VI-7
DISTRIBUTION SYSTEM VALVES	VI-8
GENERAL VALVE MAINTENANCE	VI-8
GATE VALVES	VI-8
BUTTERFLY VALVES	VI-9
BALL OR PLUG VALVES	VI-10
CHECK VALVES	VI-10
AIR RELEASE VALVES	VI-10
CONTROL VALVES	VI-10
ALTITUDE VALVES	VI-10
PRESSURE REDUCING VALVES	VI-11
PRESSURE RELIEF VALVES	VI-11
PRESSURE SUSTAINING VALVES	VI-11
FIRE HYDRANTS	VI-12
SERVICES	VI-13
WATER METERS	VI-13

CHAPTER VI: DISTRIBUTION SYSTEMS (CONT.)

POSITIVE DISPLACEMENT METERS	VI-14
TURBINE/CURRENT METERS	VI-15
VENTURI METERS	VI-15
READING METERS	VI-15
DISTRIBUTION SYSTEM HYDRAULICS	VI-16
FRICTION LOSS	VI-16
WATER HAMMER	VI-17
THRUST AT PIPE BENDS	VI-17
CORROSION CONTROL	VI-18
CORROSIVE WATER/CHEMICAL STABILITY	VI-18
BAYLIS CURVE	VI-18
GALVANIC CORROSION	VI-19
ELECTROLSYSIS	VI-19
CORROSIVE SOIL	VI-19
CROSS CONNECTIONS	VI-19
BACKFLOW AND BACK SIPHONAGE	VI-19
AIR GAP	VI-20
VACUUM BREAKERS	VI-20
REDUCED PRESSURE ZONE BACKFLOW PREVENTION	VI-21
STUDY QUESTIONS AND SAMPLE TEST QUESTIONS	VI-22

CHAPTER VII: WATER STORAGE

GROUND STORAGE TANKS	VII-1
CONSTRUCTION OF GROUND STORAGE TANKS	VII-1
DESIGN CAPABILITIES OF GROUND STORAGE TANKS	VII-1
LOCATION OF GROUND STORAGE TANKS	VII-1
PROTECTION OF GROUND STORAGE TANKS	VII-2
FIRE PROTECTION	VII-2
CATHODIC PROTECTION	VII-2
LEVEL INDICATORS	VII-3
ELECTRODE SYSTEMS	VII-3
FLOAT SYSTEMS	VII-3
PRESSURE SENSING SYSTEMS	VII-3
HYDROPNEUMATIC STORAGE	VII-4
TYPES OF PNEUMATIC TANKS	VII-4
SIZING A PNEUMATIC SYSTEM	VII-5
STUDY QUESTIONS AND SAMPLE TEST QUESTIONS	VII-6

CHAPTER VIII: PUMPS AND MOTORS

CENTRIFUGAL PUMPS	VIII-1
TYPES OF CENTRIFUGAL PUMPS	VIII-3
CENTRIFUGAL PUMP COMPONENTS	VIII-6
PUMP HYDRAULICS	VIII-12

CHAPTER VIII: PUMPS AND MOTORS

PUMP CHARACTERISTIC CURVES	VIII-14
SHUTOFF HEAD	VIII-15
CHECKING SHUTOFF HEAD	VIII-15
COMMON OPERATIONAL PROBLEMS	VIII-16
CAVITATION	VIII-16
AIR LOCKING	VIII-17
LOSS OF PRIME	VIII-17
ELECTRIC MOTORS	VIII-18
PHASES	VIII-18
SINGLE PHASE MOTORS	VIII-18
THREE PHASE MOTORS	VIII-18
SINGLE PHASING	VIII-19
CIRCUIT PROTECTION	VIII-19
STUDY QUESTIONS AND SAMPLE TEST QUESTIONS	VIII-20

CHAPTER IX: MECHANICAL SYSTEMS O & M

PUMP MAINTENANCE	IX-1
PUMP PACKING	IX-1
REMOVING OLD PACKING	IX-2
REPACKING THE PUMP	IX-2
ADJUSTING THE PACKING GLAND	IX-3
BEARING MAINTENANCE	IX-5
COUPLINGS	IX-5
ALIGNMENT	IX-6
INSTRUMENTATION	IX-7
CHEMICAL FEED SYSTEMS	IX-8
STUDY AND SAMPLE TEST QUESTIONS	IX-11

CHAPTER X: GROUNDWATER AND WELLS

HYDROLOGIC CYCLE	X-1
GROUND WATER SUPPLIES	X-2
WATER TABLE AQUIFER	X-2
ARTESIAN WELLS	X-2
TYPES OF GROUND WATER FORMATIONS	X-2
WATER WELL LOCATION	X-2
SANITARY CONSIDERATIONS	X-4
WATER WELL CONSTRUCTION	X-4
CABLE TOOL METHOD	X-4
ROTARY DRILLED WELLS	X-4
VERTICAL CASEMENT ALIGNMENT	X-4
SANITARY PROTECTION OF THE WELL	X-5

CHAPTER X: GROUNDWATER AND WELLS

DEVELOPING A WELL	X-6
GRAVEL PACKED WELLS	X-7
DISINFECTING A WELL	X-8
WELL PUMPS	X-8
VERTICAL TURBINE INSTALLATIONS	X-8
LINE SHAFT PUMPS	X-10
LINE SHAFT BEARINGS	X-10
OIL DRIPPER SYSTEMS	X-10
ADJUSTING DRIPPER SYSTEMS	X-12
WELL SCREENS	X-12
WELL HYDRAULICS	X-13
MEASURING STATIC AND PUMPING LEVELS	X-14
THE WELL LOG	X-16
TROUBLESHOOTING WELL PROBLEMS	X-17
WELL RELATED PROBLEMS	X-17
CLOGGED WELL SCREENS	X-17
SAND BRIDGING	X-18
IRON BACTERIA	X-18
LIME SCALING	X-18
CLEANING INCRUSTED WELL SCREENS	X-19
PUMP RELATED PROBLEMS	X-20
ADJUSTING IMPELLER CLEARANCE	X-20
STUDY QUESTIONS AND SAMPLE TEST QUESTIONS	X-23

CHAPTER XI: SURFACE WATER

LAKES AND RIVERS	XI-1
INTAKE STRUCTURES	XI-2
RIVER AND STREAM INTAKES	XI-2
LAKE AND RESERVOIR INTAKES	XI-2
SURFACE WATER QUALITY	XI-3
MINERALS	XI-3
TURBIDITY	XI-4
BACTERIA	XI-4
TASTE AND ODOR	XI-4
COLOR	XI-4
SOLUBILITY OF SALTS	XI-5
COMMON NAMES FOR WATER TREATMENT CHEMICALS	XI-6
pH	XI-6
PHYSICAL/CHEMICAL TREATMENT	XI-7
REMOVAL OF COLOR	XI-8
REMOVAL OF BACTERIA	XI-9
REMOVAL OF TASTE AND ODOR	XI-9
COPPER SULFATE TREATMENT	XI-9
IN-PLANT TREATMENT	XI-10
REMOVAL OF TURBIDITY	XI-10
REMOVAL OF MINERALS	XI-11

CHAPTER XI: SURFACE WATER

HARDNESS	XI-12
SOFTENING CHEMICAL REACTIONS	XI-12
RECARBONATION	XI-13
OTHER SOFTENING PROCESSES	XI-14
IRON AND MANGANESE	XI-15
DISSOLVED GASES	XI-16
OTHER MINERAL PROBLEMS	XI-16
CHEMICAL FEEDERS	XI-16
PRETREATMENT EQUIPMENT	XI-17
COAGULATION EQUIPMENT	XI-17
FLOCCULATION EQUIPMENT	XI-19
SEDIMENTATION EQUIPMENT	XI-20
UP-FLOW CLARIFIERS	XI-22
FILTRATION EQUIPMENT	XI-24
PRESSURE FILTERS	XI-24
SLOW SAND FILTERS	XI-25
RAPID SAND FILTERS	XI-25
FILTER OPERATION	XI-29
BACKWASHING FILTERS	XI-29
FILTER BACKWASHING PROCEDURES	XI-30
TROUBLESHOOTING FILTER PROBLEMS	XI-31
CLEANING FILTER BEDS	XI-31
HIGH RATE FILTERS	XI-31
STUDY QUESTIONS AND SAMPLE TEST QUESTIONS	XI-33

CHAPTER XII: SAFETY

LOCK OUT/TAG OUT (LOTO)	XII-1
CONFINED ENERGY SPACE	XII-2
HAZARD COMMUNICATION	XII-2
NFPA COLOR CODE WARNING SYSTEM	XII-4
EXCAVATION SAFETY	XII-5
STUDY QUESTIONS AND SAMPLE TEST QUESTIONS	XII-5

CHAPTER XIII: MATHEMATICS FOR WATER OPERATORS

PRESSURE	XIII-1
FLOW	XIII-2
AREAS	XIII-3
VOLUMES	XIII-3

CHAPTER XIII: MATHEMATICS FOR WATER OPERATORS

VOLUMES IN GALLONS	**XIII-4**
VOLUMES OF PIPES	**XIII-4**
VELOCITY	**XIII-5**
DETENTION TIME	**XIII-6**
DOSAGE	**XIII-7**
WIRE-TO-WATER CALCULATIONS	**XIII-10**
SAMPLE TEST QUESTIONS	**XIII-13**

INTRODUCTION TO WATER SYSTEMS

Water systems today are finding themselves with ever increasing responsibilities in the area of proper treatment and protection of the water supply. The impact on small systems can be substantial. It is more important than ever to make sure the people that run these systems have better understanding of their system's operation.

The basic responsibility of the system is to provide each individual with an adequate supply of safe, potable drinking water. This responsibility extends to all employees, whether on a managerial, supervisory, operational, or clerical level, in some direct or indirect manner. Each employee should be aware of their duties and call to the attention of their supervisors any condition that might impair the quality of the water or which may cause an interruption of service to any part of the system. These responsibilities can be broken down into three major areas of concern:

1. **Providing enough water to meet the total demands of the system.**
2. **Providing water that is both safe and palatable to the customers.**
3. **Providing that water to the customer when it is needed.**

MEETING WATER SYSTEM DEMANDS

The amount of water used by the entire system is known as the demand placed on that system. This demand may come from several different sources.

DOMESTIC WATER USAGE

Domestic water usage is any water that is used directly by people in their daily activities. These activities include bathing, drinking, cooking, sanitation and other miscellaneous activities like watering lawns, washing the car and laundry. Two major factors that determine the domestic water demands placed on a system are one, the number of individuals the system serves and secondly the amount of water each person on the system will need per day. On a nationwide basis, the average daily consumption of water (total gallons used divided by the total population) is about 130 gallons per person per day. However, this figure will vary depending on the geographic location involved and the population density of that area. Rural areas tend to have a daily consumption rate lower than the national average, while urban areas may have a higher rate.

INDUSTRIAL WATER USAGE

Industrial usage of water is considered to be water used for production of goods for marketing. The primary sources of industrial demands in rural areas for dairies, food processing, wood products and textiles. A single industrial user may require as much water as the entire domestic demand on the system.

AGRICULTURAL WATER USAGE

Agricultural usage of water is considered to be water used in irrigation of crops, watering livestock, and in cooling and cleanup of dairies and farm equipment. Agricultural demand will generally represent a larger portion of the total water usage than the industries in rural areas.

PUBLIC WATER USAGE

Public water usage may be defined as any community service that requires potable water. Services may include fire protection, recreation (swimming pools, golf courses, etc.) and street maintenance. In rural communities where these services are limited, public water usage may not be a consideration.

Present conditions and future increases in water production should be considered when designing the system. Operators may not be concerned with the original design of the system but should be aware of the impact of new additions and extensions to the system. This is especially true in areas where present water mains are handling maximum capacities.

SOURCES OF SUPPLY

Finding enough water to satisfy the demand on the system is certainly a major concern for the water supplier. The legal and financial considerations that arise when trying to procure water rights or finance the capital funding required to construct treatment facilities can limit the options available in many cases.

Systems are faces with essentially two choices when selecting a source of supply. They can drill wells and use ground water or, if a suitable river or lake is present, they may choose to use a surface water supply.

MEETING WATER QUALITY STANDARDS

Prior to 1976, water quality was regulated by individual state standards. In many cases these standards were only recommendations rather than enforceable regulations. The U.S. Congress passed the Safe Drinking Water Act (P.L. 93-523) in 1976. The law sets permissible levels of substances found in water which could be hazardous to public health. These regulations include Maximum Contaminant Levels or MCL, for inorganic and organic chemicals, radioactivity, turbidity and microbiological levels. Testing and monitoring requirements, reporting and record keeping schedules, and public notification are enforced by individual state agencies. Water quality standards in New Mexico are enforced thruogh the New Mexico Drinking Water Regulations.

MEETING WATER CONSUMPTION AND PEAK DEMANDS

Peak water consumption periods will vary daily according to seasons and geographic locations. The major responsibility of the operator is to make sure the water is available when it is needed.

SEASONAL DEMANDS

The amount of water used each day will generally vary according to the time of year. Higher daily demands occur during the hot summer months while the demand will tend to drop off during the winter months. Fluctuations in temperature and rainfall may also dictate a rise or fall in daily water consumption.

DAILY PEAK DEMANDS

Ninety percent of the daily water usage will occur during a 16-hour period. The peak demand periods occur between the early hours of the morning, (5am to 10am) and the early evening hours, (5pm to 10pm.) Demand will usually increase earlier in rural areas. In urban areas, peak demands will be higher during the week while in rural areas the highest peak demands occur on weekends.

COMPONENTS OF A WATER SYSTEM

Water systems are made up of a number of devices that are used to deliver water to the customer. The major components can be divided into the areas of the water production, treatment, and distribution.

WATER SOURCES AND TREATMENT

The source of water can be from groundwater, surface water, or water purchased from another water system. Usually the source of your water will determine the type of treatment necessary. In most circumstances, groundwater requires little treatment. Groundwater quality problems include minerals, hardness, and dissolved gasses. Surface water quality issues are turbidity, tastes and odors, and color. Surface water usually requires chemical treatment and filtration.

DISTRIBUTION AND TRANSMISSION WATER MAINS

Main lines transport water from the source or from the treatment facility to the area to be served. These pipes are usually the largest in the system. They also serve as feeder lines for those users who are located along them.

SERVICES

Services are small lines (usually l" or 3/4") that carry water from the main line to the water user. The service connection includes:

- Some means of tapping the main line or feeder line.
- A corporation stop for turning the water off at the main or feeder line.
- Service pipe or tubing.
- Some type of meter setter which includes a meter stop.
- Water meter.
- A fitting for the water customer's connection.

PUMPS

Pumps are used to move raw water from the source into the treatment facility or from the well into the system. They are also used to move treated water from the treatment facility into the system. Pumps are used to create pressure for the system and to fill the water storage facilities.

STORAGE TANKS

Storage tanks hold a reserve of water for those times when the demand for water is greater than can be supplied by the trunk line or by the pumps. They also provide water for fire protection and for those times when the supply might be interrupted.

CONTROLS

Automatic pump controls sense pressure on the system and turn the pump on when the pressure falls below a desired point or when the water level in the water tower drops below a certain level. When the water level in the tower has been restored or when the systems pressure has been raised to normal, the controls automatically turn the pump off. Pump controls can also turn the pump off, if alarm conditions occur. These types of conditions include; high discharge pressure, motor overload, high motor or bearing temperatures, or low suction pressure.

ISOLATION VALVES

Isolation valves are used throughout the system to stop the flow of water. They are usually gate valves or butterfly valves. The trunk line would have at least one isolation valve per mile of line in small rural systems and in large municipal systems they may need to be located every 300-600 feet. Each branch line should have an isolation valve at the point of connection to the trunk line. The proper location of these valves is important in order to isolate small sections of line for repair in an effort to minimize the number of customers that are out of water.

CONTROL VALVES

Control valves are designed to control flows or pressures in the system. There are a number of different applications for the control valves that may be used in the system. They are usually diaphragm operated globe valves that are controlled by hydraulic pilot systems. Here are some of the applications for control valves in a water system:

- Pressure reducing valves - These valves are used to drop the pressure in a distribution zone in order to avoid damage to the system.
- Pressure relief valves - These valves are used to "bleed" water from the system when the pressures reach a point that could result in damage to the system.
- Altitude valves - These valves are used when two or more storage tanks are on the same main line. An altitude valve will isolate the lower tanks and prevent them from overflowing while the other tanks are filling.
- Pressure sustain/flow limiting valves - These valves are used to limit the amount of flow to a certain portion of the system when it drops the pressure in other sections below a certain point.
- Pump control valves - These valves are designed to replace check valves on booster pumps. They are closed when the pump starts and open slowly to minimize surges in the system. The also close before the pump stops.

SURGE TANKS

Surge tanks act as pressurized shock absorbers in the system. They dissipate the pressure spikes caused by water hammer that is caused by sudden changes in movement in the system.

FIRE HYDRANTS

Fire hydrants allow fire-fighting equipment to draw a large volume of water from the system quickly. They may also be used as sampling sites, flushing stations, and vent points for filling drained lines.

OPERATOR'S RESPONSIBILITIES

An operator is the person who is, in whole or part, responsible for the operation of a water system. At times, he/she may be a manager, laboratory technician, mechanic, meter reader, public relations person, troubleshooter, or inspector. Becoming a competent operator requires the development of many skills. To become a competent operator one must have an interest in his/her work, be dependable, be willing to learn, and be willing to assume responsibility and work without supervision.

Each water utility represents a large financial investment in facilities and equipment and improper operation and maintenance can quickly damage both. Although much of a water system is "out of sight", it should always be on the mind of the operator. A competent operator provides a large degree of protection for both the tremendous financial investment and the health of the community.

REFERENCES:

Sacramento, *Water Treatment Plant Operation*, 4th Edition, 1999, Vol. 1, Chapter 1
Sacramento, *Water Distribution System O&M*, 4th Edition, 2000, Chapter 1
Sacramento, *Small Water System O&M*, 4th Edition, 2001, Chapter 1

BASIC STUDY QUESTIONS

1. What are the three responsibilties of any public water supplier?

2. What are three examples of public water usage?

3. What are the main components of a water system?

BASIC SAMPLE TEST QUESTIONS

1. Which of the following is not likely to present a water quality issue in a groundwater system?

   A. Hardness
   B. Turbidity
   C. Iron
   D. Bacteria

2. Peak daily consumption may be 2.5 times the daily average.

   A. True
   B. False

SAFE DRINKING WATER ACT

The federal Safe Drinking Water Act (PL93-523) was enacted in 1974 and went into effect in 1976. The purpose of the Act is to establish national enforceable standards for drinking water quality and to guarantee that water suppliers monitor water to ensure that it meets national standards. This Act established either the maximum concentration of pollutants allowed in, or the minimum treatment required for, water that is delivered to the customers. These substances are known to present adverse health effects to humans. Prior to the passage of PL93-523 standards were set by the individual state regulatory agencies. The limits and enforcement procedures varied from state to state and, in passing the law, Congress has attempted to assure uniformly safe drinking water for the general public. The SDWA was amended in 1986 and again in 1996.

Each state (or tribal government), except Wyoming and the District of Columbia, has primacy regarding the enforcement of the standards. The New Mexico Environment Department is the enforcement agency for New Mexico. All sampling and reporting, except for non-tribal and federal, systems is handled through the NMED.

PUBLIC WATER SYSTEMS

The regulations established in PL93-523 apply only to public water systems. A public water system is any system that contains 15 service connections or serves 25 people more than 60 days a year. These systems are responsible for both complying with these regulations and reporting to the public when any standards are exceeded. Public water systems can include private schools, interstate rest stops, state parks, and even restaurants.

PRIMARY CONTAMINANTS

The SDWA identified a number of chemicals and microorganisms that are found in drinking water supplies. Because excessive amounts of some of these substances have been determined or anticipated to cause adverse health effects they are referred to as primary contaminants. These substances can be grouped into four major categories:

Primary Contaminants

(1) Inorganic Chemicals

(2) Organic Chemicals

(3) Radioactive Chemicals

(4) Waterborne Bacteria

MAXIMUM CONTAMINANT LEVELS (MCL)

The maximum amount of any one of these substances that can be allowed in water, according to the regulations, is known as the maximum contaminant level (MCL). The MCLs for these chemicals and compounds are set at levels that are considered to be many times less than the concentrations that are known, or anticipated to cause adverse health effects.

INORGANIC CONTAMINANTS

These contaminants are mostly heavy metals. They may enter the water supply naturally through ground water formations or from mining runoff and industrial discharges. The MCL for each chemical is listed below.

Inorganic Contaminant	MCL (mg/l)
Antimony	0.006
Arsenic	0.05
Barium	2.0
Beryllium	0.004
Cadmium	0.005
Chromium	0.1
Cyanide	0.2
Mercury	0.002
Nickel	0.1
Selenium	0.05
Thallium	0.002
Copper	1.3* Action level
Lead	0.015* Action level
Nitrates (as N)	10.0
Total Nitrate & Nitrite (as N)	10
Nitrite (as N)	1.0
Fluoride	2.0 Public Notice 4.0 Violation
Turbidity	5 NTU (single occurrence) 1 NTU (< 5% of samples)
Asbestos	7,000,000 Fibers/L

LEAD AND COPPER RULE

A representative sampling survey must be conducted for lead and copper that may be present at the customer's tap. Most of the lead and copper found this way comes from the customer's plumbing. The system will be responsible for treating the water to stabilize the corrosive qualities that cause the leeching of lead and copper from the customer's plumbing. Sampling for lead and copper requires taking a “first draw” sample from the customer’s tap, after water has been standing in the plumbing for at least 6 hours but no longer than 18 hours. If the 90th percentile results exceed the action levels for either metal, the system must take steps to stabilize the system water through chemical addition of lime or another form of alkalinity.

NITRATES

Nitrates are the only chemical contaminant that represents an immediate health risk. Pregnant mothers and infants under 18 months can develop a condition known as “Blue Baby Syndrome”. The presence of nitrates in the bloodstream reduces oxygen uptake that gives the skin a blue tint.

FLUORIDE

Fluoride is added to water to help prevent tooth decay. The optimum dosage for fluoride is 0.8-1.2 mg/l. However, at higher concentrations, fluoride can create stains on teeth and lead to brittle bones in older individuals. The average ambient air temperature for the system is used to determine the optimum dosage for fluoride.

TURBIDITY

Turbidity is clay, silt or mud in the water. Although turbidity does not represent a health risk by itself, it can shield harmful bacteria from disinfection processes. Turbidity is measured in Nephelometric Turbidity Units (NTU). The device used to measure NTU’s is called a nephelometer or turbidimeter.

ORGANIC CONTAMINANTS

These contaminants include herbicides and insecticides that are primarily used in agriculture applications, organic solvents used in industrial applications, organic by-products of industrial processes, and chemical by-products from chlorination of drinking water. Runoff from agricultural spraying or improper application techniques can be a major source of these contaminants in a surface water supply. Industrial discharges, accidental spills and improper disposal of hazardous wastes can also become sources of contamination.

These compounds are grouped together under the headings of Volatile Organic Compounds or VOC's and Synthetic Organic Compounds or SOC’s. There are currently 21 regulated VOC's and 30 SOC’s that must be analyzed. Some of the VOC's are listed below:

Organic Contaminant	**MCL (mg/l)**
Benzene	0.005
Vinyl Chloride	0.002
Carbon Tetrachloride	0.005
Styrene	0.1
Total Trihalomethanes (TTHM)	0.1

RADIOACTIVE CONTAMINANTS

Most radioactive substances occur naturally in ground water and in some surface supplies. Some man-made substances may also enter drinking water supplies from processing facilities, mining areas, and nuclear power plants.

Radioactive Contaminant	MCL (pCi/l)
Radium 226 and 228	5
Gross Alpha Activity	15
Gross Beta Activity (man-made)	4 millirem/yr

BACTERIOLOGICAL CONTAMINANTS

The coliform group of bacteria represents the indicator organisms used in determining bacteriological contamination. Their presence indicates the possibility that some pathogenic (disease causing) organisms may also be present. The MCL is exceeded when 2 (for systems required to collect 40 or fewer) or more than 5% (for systems required to collect more than 40) of monthly compliance samples indicate the presence of Total Coliform bacteria. The presence of Total Coliform in any sample will require at least three repeat samples to be taken. These repeat samples must be taken within 24 hrs of notification of positive results.

Small systems that normally take only one sample per month have to take four (4) repeats when they get a total coliform positive test result. If any system has to take repeat samples it must also take a minimum of five (5) samples the following month.

SECONDARY CONTAMINANTS

There are certain substances in water that, although they do not present serious health hazards, can cause temporary physical discomfort and make the water unsuitable for use. Each state may determine which of these standards are included in their regulations. Chlorides can make the water taste salty. This is also known as brackish water. Sulphates can cause minor gastro-intestinal problems. Iron and manganese can result in red or black water problems. The pH of the treated water can also create some digestive problems if it is very high or very low. Recommended levels for secondary contaminants are:

Secondary Contaminants	MCL (mg/l)
Total Dissolved Solids	500
Chlorides	250
Sulfates	250
Carbonates	350
Iron	0.3
Manganese	0.05
pH	6-9

MONITORING AND REPORTING

The public water systems are responsible for monitoring their water quality and reporting violations of the SDWA standards to the public. The New Mexico Environment Department is currently collecting and submitting chemical and radiochemical samples to the laboratory for all public water supplies. The program is funded through a "Water Conservation Fee" of 3 cents per 1000 gallons paid by each system. However, the systems will still be responsible for the results of testing and any public notification that may be required. Systems must retain copies of chemical and radiochemical analysis records for 10 years and bacteriological tests results for 5 years. The system is required to report to NMED within 48 hours if they fail to comply with any NMED Drinking Water Regulations.

SAMPLING SCHEDULES

Samples used in testing for chemical and biological contaminants must be collected periodically. Samples for inorganic chemical analysis must be submitted once every year for surface supplies and once every three years for ground water supplies. Sampling for organic compounds is done quarterly for the initial set of samples. Surface water plants must also collect four TTHM samples quarterly during this initial period. After that, samples are collected yearly for surface water and every three years for ground water as long as no VOC's or SOC's are detected. If they are found, the source (well or surface supply) must be sampled every quarter. Under the new Standardized Monitoring Rule, most chemical contaminants are monitored in a cycle of 3/6/9 years. Each three (3) year period is referred to as a compliance period. Bacteriological sampling schedules vary from state to state. A minimum of one sample per month is normally required for the smallest systems. As the population served increases so does the number of samples required. Whenever compliance samples are submitted it is important to maintain a "chain of custody" that identifies who handled the sample from the time it was taken until it was tested.

Bacteriological Violations

When a positive BAC-T sample is reported repeat samples are required. If the repeats come back negative there is no violation. If more than 5% of the monthly samples are positive for Total Coliform (TC), including repeats, there is a non-acute violation that requires public notification. This means that any system taking less than 40 samples per month can only have 1 total coliform positive sample per month.

If the MCL is exceeded and any of the test results were Fecal Coliform or E. Coli positive, a Tier 1 violation has occurred that requires notification through the electronic media. This sometimes triggers a "Boil Order" advisory. This type of violation used to be called an acute violation. If the MCL is exceeded and none of the positive results indicated a presence of Fecal Coliform, a Tier 2 violation has occurred. This level of violation used to be called a non-acute violation.

PUBLIC NOTIFICATION

The water system will be required to notify the public any time maximum contaminant levels are exceeded. These violations of the standards fall into one of three Tiers. A Tier 1 notice is required for a violation that has a significant potential for immediate adverse health effect. Tier 1 violations require 24-hour public notice and must be reported to NMED within 24 hours of violation notification. A Tier 2 notice is required for a violation that has potential for a serious, not immediate, adverse health effect and requires public notice within 30 days. A Tier 3 notice is required for violations not included in Tiers 1 or 2 and requires public notice within 12 months. Tier 2 and 3 violations must be reported to NMED within 10 days of violation notification.

ACTION PLANS FOR VIOLATIONS

If a water supply exceeds the primary standards the water system must either cease using water from the contaminated source, provide adequate treatment to remove the contaminants or locate a new source of supply that meets these requirements. Blending may be done under certain conditions. It will require that the blended water enter the system from a single point of entry.

VARIANCES AND EXEMPTIONS

A system that is found to exceed the MCL for a primary contaminant may not be able to correct the problem for financial or technical reasons. Depending on the circumstances, the system may be granted a variance or exemption. The fact that a variance or exemption has been granted does not mean that the system is no longer required to notify the public of the problem. Notification must continue on a monthly basis until the system meets the standard.

A variance may be granted to a water system when its supply is found to exceed maximum standards and no technology is available to economically remove these contaminants. Variances may be extended at the discretion of the state regulatory agency if no treatment methods are made available during the period the variance is granted.

When a system is unable to financially provide the necessary treatment to reduce contaminant levels to acceptable limits, an exemption can be granted to the water system. Exemptions are granted by state regulatory agencies only in cases where a serious health hazard is not present.

SURFACE WATER RULE

Any system that uses surface water must provide treatment of the supply. The minimum acceptable level of treatment is filtration and disinfection. Infiltration galleries may now be considered surface supplies because they are groundwater that is under the influence of surface water (GWUDI). The concerns about contamination by *Giardia* and *Cryptosporidium* bacteria have created the need for higher free chlorine residuals and longer disinfection contact times.

The "CT" calculation is used to determine the necessary contact time at any given concentration. The formula is C x T = A, where C is the chlorine concentration, T is the contact time in minutes, and A is a temperature-based constant. Removal of *Cryptosporidium* is based on a 3-log reduction of the numbers found in raw water. A 3-log removal or deactivation would mean that 0.1% of the bacteria may survive or 99.9% were removed. A 4- log removal or deactivation would mean that 0.01% of the organisms may survive or 99.99% were removed**.**

DISINFECTION-DISINFECTION BY-PRODUCTS RULE

Systems that use chlorination may create total trihalomethanes **(**TTHMs**)** as a by-product of disinfection. If the creation of these by-products causes the system to exceed the MCL for TTHMs, 0.08mg/l or 80 ppb, the system will be required to change to a different means of disinfection. Total chlorine residuals are also limited to a maximum of 4.0 mg/l. The D-DBP rule currently only applies to systems serving a population over 10,000.

REFERENCES:

Sacramento, *Water Treatment Plant Operation*, 4th Edition, 1999, Volume 2, Chapter 22
Safe Drinking Water Act
NMED *Drinking Water Regulations*

BASIC STUDY QUESTIONS

1. What is an MCL?

2. Why is turbidity a Primary Contaminant?

3. What is a nephelometer?

4. How much is the "Water Conservation Fee"?

5. How long must bacteriological and chemical sampling results be kept?

ADVANCED STUDY QUESTIONS

1. Which Primary inorganic contaminant poses an immediate health risk?

2. When you get a positive Total Coliform sample result, what is the minimum number of retakes required?

3. What are the action levels for lead and copper?

4. If bacteriological retakes are done this month, what is the minimum numbers of samples that must be turned in next month?

5. If a 3-log removal is required for *Giardia Lamblia*, what percentage of organisms can survive and still meet the requirement?

BASIC SAMPLE TEST QUESTIONS

1. A public water system is any system that serves a population greater than or equal to:

   A. 25
   B. 50
   C. 100

2. What is the maximum total chlorine residual allowed by the Disinfectant-Disinfection By-Products Rule?

   A. 2 mg/l
   B. 4 mg/l
   C. 6 mg/l
   D. 8 mg/l

3. What type of contaminant is iron?

   A. Primary Inorganic
   B. Primary Organic
   C. Secondary

4. Which Primary Contaminant is sometimes added to water supplies to prevent tooth decay?

   A. Iron
   B. Arsenic
   C. Fluoride
   D. Mercury

5. The failure of a public water system to comply with the NM Drinking Water Regulations must be reported to NMED within:

   A. 12 Hours
   B. 48 Hours
   C. 4 Days
   D. One week

ADVANCED SAMPLE STUDY QUESTIONS

1. The MCL for Total Trihalomethanes is:

   A. 0.01 mg/l
   B. 0.08 mg/l
   C. 0.2 mg/l
   D. 2.0 mg/l

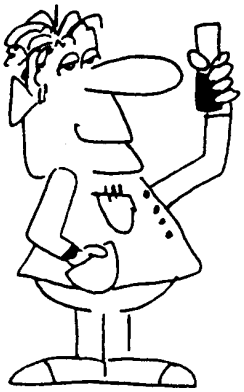

2. SDWA sampling results must be reported to:

   A. New Mexico Water Association
   B. American Water Works Association
   C. New Mexico Environment Department
   D. US EPA

3. Groundwater systems must sample for inorganic chemicals every:

   A. Month
   B. Day
   C. Year
   D. Three years

4. The SDWA Compliance Cycle for the Standardized Monitoring Rule consists of three:

   A. Years
   B. Compliance Periods
   C. Quarters
   D. Months

5. How many bacteriological samples must be taken every month before a system is allowed to have TWO positive samples without violating the drinking water standard?

   A. 10
   B. 20
   C. 40
   D. 60

WATER SAMPLING

NEW MEXICO WATER CONSERVATION FEE

The NM Water Conservation Fee of 3 cents per 1000 gallons is collected from each public water system in order to fund sample collection and testing for inorganic, organic, and radiological contaminants. The fee also covers bacteriological testing. This means that most NM public water systems (PWS) are only responsible for collection of monthly bacteriological samples in order to comply with SDWA monitoring schedules. However, the PWS is ultimately responsible for compliance and needs to maintain records showing that samples have been collected according to the regulations.

WATERBORNE PATHOGENS

Water systems must strive to keep their drinking water free of disease causing bacteria known as pathogens. They can be transported either by water or physical contact. People that have contracted these diseases are called carriers. Without proper medical attention and treatment, individuals can still transmit the disease even though they no longer have any of the symptoms. There are five waterborne pathogens that can be found in all water supplies and two that are only found in surface water supplies. The bacteria that are found only in surface water supplies form cysts and spores that protect them from cold temperatures. Because of this protection, they are much more difficult to kill with disinfectant chemicals.

WATERBORNE DISEASES

All Water Supplies:
Typhoid
Paratyphoid (Types A & B)
Cholera
Dysentery
Hepatitis

Surface Water Only:
Cryptosporidium
Giardia

All of these diseases are caused by pathogenic bacteria except hepatitis, which is a virus. It is very difficult to identify any one particular pathogen by laboratory testing. To make testing more reliable and economical, the lab tests are designed to identify a large family of bacteria that are related to the disease causing bacteria, rather than identifying each type of pathogen.

COLIFORM GROUP OF BACTERIA

Coliform bacteria are enteric bacteria. This means that they are found in the intestinal tract of warm-blooded animals, including humans. These bacteria, known as E. Coli in humans, do not cause disease but are necessary for the digestion of food. The waterborne pathogens are also enteric bacteria and are part of the coliform family. Therefore, if coliform bacteria are present in the water supply, pathogens may also be present. The coliform bacteria live longer in water and are easier to detect by laboratory testing. This is the reason the coliform group has been chosen as the indicator organism for waterborne pathogens. If coliform bacteria are not present it is assumed there are no pathogens present either.

The coliform family has been divided into two groups. Results may come back as either total coliform positive (TC positive) or fecal coliform positive, or (FC positive or E-Coli positive.) Total coliform positive means that no human coliform are present. Fecal coliform positive indicates the presence of E. Coli, which means there is a greater chance of pathogens being present. The laboratory tests for coliform include the MPN method, the Membrane Filter test, and the Colilert test. These tests require 100 milliliters of sample.

SAMPLING SCHEDULES AND TECHNIQUES

It is the responsibility of the system to collect samples for bacteriological ("Bac-T") testing. It is very important to make sure samples are collected, tested and reported properly. If a sample becomes contaminated due to poor sampling procedures, or is not sent to the testing facility at the proper time, the system may technically be in violation of SDWA standards. This may result in the system having to notify the public of violations when the water is actually safe.

SAMPLING SCHEDULES

The federal regulations regarding "Bac-T" sampling schedules set the minimum number of samples a water system must submit at one per month. As the size of the system increases so does the minimum number of samples required each month. These sample results must be reported to NMED within 10 days of notification of positive results.

The sampling points should be identified by a sampling plan that insures samples are taken from all major parts of the system to assure that the entire system is represented. Small systems must have at least two sample sites in the system. Samples should also be taken at regular intervals during the month. Even the best sampling plan can only indicate that the system was safe at the time it was sampled and only at the sites where samples where taken.

SAMPLING TECHNIQUES

The first consideration in collecting a "Bac-T" sample is the sample bottle. These bottles are provided by the laboratory. They are sterilized prior to being distributed. They should be stored in a cool, dry place until they are needed for a sample. Sodium thiosulphate is added to the bottle before it is sterilized. Its presence may be indicated by a trace of white powder or a white tablet in the bottom of the bottle.The purpose of the sodium thiosulphate is to neutralize any chlorine that may kill any bacteria that are in the sample.

Two things to remember when using sample bottles:

1. Never wash out a bottle or even open it until you are ready to take the sample.

2. If a sample bottle has any dirt or junk in it or in the lid, <u>don't</u> <u>use</u> it. It's better to get a new bottle than to take a bad sample.

Once the pre-sterilized bottles are obtained the next consideration is the actual collection of the sample. The procedure for collecting the sample is given below. These instructions should be carefully followed to prevent accidental contamination of the sample.

1. **Select a sampling point**. Always keep sanitary conditions in mind when selecting a sampling point. Never use a kitchen sink faucet or an outdoor faucet that drips. Any hoses, vacuum breakers or other attachments must also be removed.

2. **Flush the line**. Open the tap and let the water run for several minutes. This will insure that the water being sampled is from the main and not from the customer's plumbing.

3. **Collect the sample**. Remove the cap, making sure that you do not touch the inside of the cap or the top of the sample bottle. Don't aerate the sample or allow it to splash on the outside of the bottle. Fill the bottle carefully to the 'fill line' or within ½" to 1" of the top. This guarantees that there is at least 125ml of sample in the bottle. Do not fill it all the way. An air space is needed to agitate the sample before it is tested at the lab. Never set the cap down or leave it off longer than it takes to collect the sample. Mark the bottles for identification. The samples must then be placed under refrigeration at 39° F or 4° C until tested.

REPORTING AND SHIPPING CONSIDERATIONS

The final consideration for "Bac-T" sampling is the proper completion of the sample form. Make sure the following items are listed on the sample form:

BAC-T Sample Form Data

l. System name, address, and identification number

2. Location of sampling site

3. Date and time sample was taken

4. Type of water sampled (raw or treated)

5. Chlorine residual

6. Computer ID number

7. Name of operator taking sample

There are times when water systems need to collect Bac-T samples for reasons other than monitoring compliance. New water lines and lines that have been repaired should be tested. Wells that have been disinfected should be tested. These samples must be identified as something other than a compliance sample so they will not count as a violation against the system if they are found to be positive. This is done by checking "Special Sample" on the form and identifying the type of sample in the "Remarks" line.

There are certain requirements regarding the age of a Bac-T sample. New Mexico Drinking Water Regulations state that the sample must be tested within 30 hours after it is taken. If a sample does not arrive at the lab within this time period it will not be tested. Most labs require that the sample arrive at the lab within 24 hours of collection so the testing can be done before it is 30 hours old. Also make sure all samples are sent in on time, preferably at the first of the week. Always obtain a receipt from the postmaster as part of the chain of custody.

RETAKES AND VIOLATIONS

Anytime a Bac-T sample result comes back positive, indicating the presence of total coliform, repeat samples must be taken. Three repeats are usually required. One must be taken at the site of the positive sample. The other repeats are taken upstream and downstream of the site (within five service connections.) These repeat samples must be taken within 24 hours of receipt of positive results. They must be identified as "Resample" on the sample form. When repeat samples are needed, a minimum of five routine samples will be required for the following month.

When retakes come back positive, the system is usually in violation of the SDWA standards (unless 40 or more samples are taken then 5% of the samples can be positive.) If all of the positive samples were total coliform, it is a Tier 2 violation. If the MCL is exceeded and fecal coliform or E-Coli positives occur in either the routine sample or the retakes, it becomes a Tier 1 violation requiring immediate public notification. In either case the NMED must be notified within 24 hours of any positive sample results. The Water system is responsible for any public notification that may be required.

REFERENCES:

Sacramento, *Water Treatment Plant Operation*, 4th Edition, 1999, Volume 2, Chapter 22
Safe Drinking Water Act
NMED *Drinking Water Regulations*

BASIC STUDY QUESTIONS

1. What is an indicator organism?
2. What is sodium thiosulphate?
3. Why should you flush before sampling?

ADVANCED STUDY QUESTIONS

1. How many retakes are required for each positive?
2. Which bacteria are found only in surface water supplies?
3. What must be done on the sample form to identify a Bac-T sample is from a well and is not a compliance sample?
4. How soon must NMED be notified that a bacterial MCL has been exceeded?

BASIC SAMPLE TEST QUESTIONS

1. Which of the following is an indicator organism?

   A. Giardia
   B. Cryptosporidium
   C. Hepatitis
   D. E. Coli

2. Which factor is used to determine how many Bac-T samples must be taken?

   A. Number of operators
   B. Type of treatment
   C. Number of people served
   D. Amount of water produced

3. What is the minimum number of bacteriological sample(s) required each month?

   A. 1
   B. 2
   C. 3
   D. 4

4. If retakes are required this month, what is the minimum number of samples required next month?

   A. 5
   B. 10
   C. 15
   D. 20

ADVANCED SAMPLE TEST QUESTIONS

1. How many samples must be taken before two positive results DO NOT result in an MCL violation?

   A. 10
   B. 20
   C. 40
   D. 80

2. A bacteriological sample must be tested within how many hours?

   A. 24
   B. 30
   C. 48
   D. 60

3. When the MCL is exceeded and fecal coliform positive results came back from one of the samples, what is the regulatory result?

   A. This is a Tier 1 violation
   B. This is a Tier 2 violation
   C. There is no notification required
   D. Only written notification is required

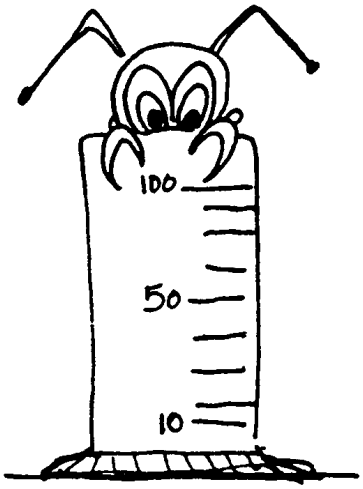

DISINFECTION

The process of killing pathogenic bacteria in the drinking water supply is known as disinfection. Disinfection is the final step in the treatment process and is necessary to provide a "bacteriologically safe" drinking water for the public. Disinfection is now required for all public water supplies. Chlorination is the most common means of killing disease-causing bacteria in water supplies.

While chlorine is used primarily for disinfection in water treatment, it also has other uses in the treatment process. Chlorine can be used to remove iron and manganese, some kinds of tastes and odors, and some dissolved gases, such as Ammonia (NH_3) and Hydrogen sulfide (H_2S). The use of chlorine in these instances usually occurs early in the treatment process. Pre-treatment of raw water by pre-chlorinating used to be a fairly common practice until the mid-1970's. Concerns over disinfection by-products, such as TriHaloMethanes (THM's) and halo acetic acids, have almost eliminated the practice of pre-chlorination in the United States. The removal of taste and odors from raw water is now accomplished using Powdered Activated Carbon (PAC) or oxidizing agents other than chlorine, that do not result in chlorinated by-products. The growing concern regarding the use of chlorine as a disinfectant may eventually mean a change to one of these other oxidizing agents as the primary means of disinfection at sometime in the future.

Chlorine is the most widely used disinfectant because it is readily available, easily applied, and cheaper than other oxidizing agents such as potassium permanganate ($KMnO_4$), chlorine dioxide (ClO_2), or ozone (O_3). Chlorine is applied in one of three forms; chlorine gas, chlorine powder (HTH), or an aqueous solution like chlorine bleach.

CHLORINE GAS

Chlorine gas (Cl_2) is compressed into a liquid for storage. It can be purchased in cylinders containing 150 or 2000 pounds of the liquefied gas. Chlorine gas is cheaper per pound than either of the other forms.

CHLORINE POWDER

Chlorine in its dry form is calcium hypochlorite [$Ca(OCl)_2$]. It is also most commonly known by the trade name HTH (High Test Hypochlorite). Only about 65 – 70% of the HTH is available as chlorine. The rest is calcium, which is not a disinfectant. Dry chlorine is 2-3 times more expensive, per pound of chlorine, than chlorine gas.

CHLORINE BLEACH

Chlorine bleach is a liquid solution of sodium hypochlorite (NaOCl). Bleach is usually 3 – 12% available chlorine and 88 – 97% water. Bleach is the most expensive form of chlorine and is normally used for disinfecting small wells and water lines. It is sometimes used for supply disinfection in very small water systems.

CHLORINE TREATMENT TERMS

Several terms are used to identify the various stages and reactions that occur when chlorine is used as a disinfectant. The basic unit of measurement for chlorination, or any other chemical treatment is milligrams per liter (mg/l) or parts per million (ppm). These are very small units reflecting concentrations that are essentially one part chemical for every million parts of water.To get some idea of how small a concentration this really is it should be pointed out that 1% is equal to 10,000 mg/l or ppm.

CHLORINE DOSAGE

The chlorine dosage is the amount of chlorine that is added to the water. The dosage can be determined from the number of pounds of chlorine used and the number of millions of pounds of water treated.

CHLORINE DEMAND

Chlorine is a very reactive oxidizing agent. It will react with a certain substances that may be found in water. This list includes; iron, manganese, hydrogen sulfide, organic compounds and ammonia. When chlorine reacts with these substances, it loses it disinfecting properties. This is referred to as the chlorine demand. For chlorine to be effective as a disinfectant, the dosage must always exceed the demand that is present in the water. The chlorine demand may vary from day to day in a surface water supply. It is usually fairly constant in a ground water supply.

CHLORINE RESIDUAL

The chlorine that remains in the water, after it has finished reacting with those substances that represent the demand, is known as the chlorine residual. The concentration of the residual is determined by subtracting the demand from the dosage.

EXAMPLE: A 4.0 mg/l dosage is added to water that has a demand of 2.5 mg/l.
What is the residual?

Dosage - Demand = Residual
4.0 mg/l - 2.5 mg/l = 1.5 mg/l Residual

There are two types of residuals that result from the chlorination of water. They are free chlorine residual and combined chlorine residual.

FREE CHLORINE RESIDUAL

After the demand has been satisfied, any chlorine that is left will react with water to form hydrochloric acid and hypochlorous acid.

$$\mathbf{Cl_2 + H_2O > HCl + HOCl}$$

The hypochlorous acid is the disinfecting agent and the presence of the hypochlorous ion ($OC1^-$) is measured to obtain the free chlorine residual.

COMBINED CHLORINE RESIDUAL

Chlorine reacts with water to form hypochlorous acid. If ammonia is present, the hypochlorous acid will react with it to form compounds known as chloramines.

$$\mathbf{HOC1 + NH_3 > NH_2Cl + H_2O}$$

Chloramines are found in three forms. They may contain from one (NH_2Cl) up to three (NCl_3) atoms of chlorine. The chemistry of the water and concentration of chlorine will dictate which of the chloramines are formed. Chloramines are weak disinfectants. They require longer contact times and higher concentrations to achieve disinfection than free chlorine residual. However, they do not breakdown as quickly as free chlorine and remain in the system longer.

DISINFECTION REQUIREMENTS

Two factors must be taken into consideration when disinfecting drinking water. First, enough chlorine must be added to reach a predetermined concentration in the water. Then the bacteria must come in contact with the solution for a certain period of time. This is referred to as achieving the proper residual and contact time. Killing pathogenic bacteria requires a minimum of 0.2-0.4 milligrams per liter (mg/l) of free chlorine residual and a contact time of 20 minutes. The contact time can be reduced if the residual is increased. Viruses, Giardia, and Cryptosporidium are harder to destroy than the other waterborne diseases. Free residuals of 1.5-2.0 mg/l and much longer contact times may be required to destroy these organisms.

EFFECTS OF TEMPERATURE AND pH

Changes in temperature and pH of the water can reduce the effectiveness of chlorine. Colder temperatures slow down reaction times requiring higher concentrations and longer contact times to achieve proper disinfection. A high pH impedes the formation of the hypochlorous acid and requires a higher dosage to obtain the proper residual.

BREAKPOINT CHLORINATION

When chlorine is added to water that contains no ammonia, the residual that is obtained will be free available chlorine. If ammonia is present, and the demand has been satisfied, some of the free chlorine will react with the ammonia to form chloramines or combined chlorine residual. As more chlorine is added, it will breakdown the chloramines that have been formed and the combined residual will begin to drop. A point will be reached where the residual will begin to rise again after all of the chloramines, that can be, are destroyed. There may be some combined residual left in the water at this point. From this point, any additional chlorine dosage will result in the formation of only free chlorine residual. This is known as the "breakpoint". All water systems that chlorinate their water will, in fact, practice breakpoint chlorination. They will add enough chlorine to the water to achieve a free chlorine residual of at least 0.2-0.5 mg/l.

The Breakpoint Curve shown on below illustrates the formation and destruction of chloramines before free residuals are achieved. Every system's breakpoint will vary depending on the chemical makeup and chlorine demand of the raw water.

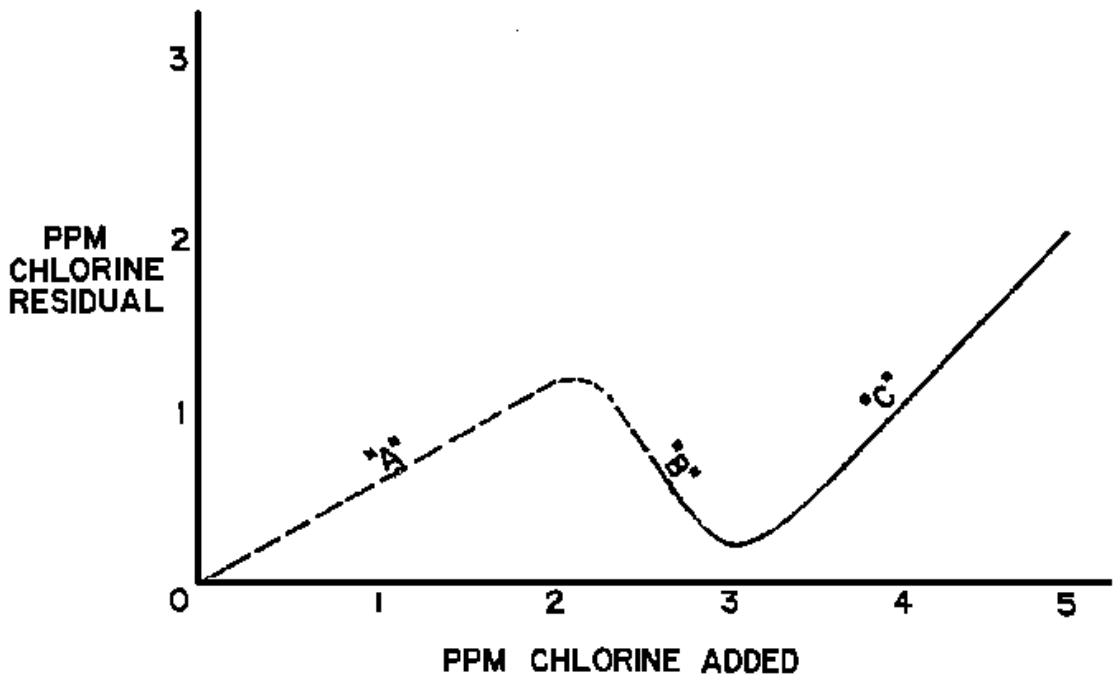

BREAKPOINT CURVE

As chlorine is added to the water, it reacts with the ammonia that is present and a combined residual reading is obtained (A). In this case, as the dosage increases to about 2ppm (mg/l) the combined residual drops because the chloramines are being destroyed (B). When the dosage reaches 3ppm (mg/l), the breakpoint occurs and first free chlorine residual is obtained. Once the breakpoint has been reached, the free residual will increase at the same rate as the dosage (C). There may still be some combined residual in the water even though the breakpoint has been reached, but it will remain at this minimum level as long as the dosage is greater that 3 ppm (mg/l).

A common complaint received by many operators is that the water has a "chlorine odor." These odors are almost always caused by chloramines in the water rather than a free chlorine residual. Understanding the break point curve may help solve this problem.

The initial reaction to this type of call may be to reduce the chlorine dosage to reduce the odors. This is actually the last thing that you would want to do. First, the problem may be able to re remedied by simply flushing the line in the area of the complaint. The odors are usually a result of stale water sitting in the lines. The free chlorine that was originally present may have broken back down into chloramines. Flushing will remove the stale water and the odor problem, until the water gets stale again. If flushing doesn't correct the problem, look at the breakpoint curve before adjusting the chlorine feed rate.

If the current conditions place us on the left side of the breakpoint there is no free residual present. This can be confirmed with a residual test. That means the water is on the "B" portion of the curve. Decreasing the chlorine dosage will result in moving further to the left on the curve into the "A" portion. Here the chlormine concentration is even higher and the odors may become worse instead of better. If the dosage is increased to the point where free chlorine residuals are present again, the amount of chloramines (and their odors) will be kept to a minimum.

TESTING FOR CHLORINE RESIDUALS

There are three methods that are used to test water for chlorine residual. Two of them are field tests. The Ortho-Tolidine-Arsenite (OTA) test was the industry standard until the mid -1970's. The problem with the OTA test was that iron and nitrites in the water would interfere with the test. In addition, OTA was found to be a carcinogen. It is no longer used for chlorine residual testing today. Instead, the Diethyl-p-Phenylene-Diemine (DPD) test is used for field work. It is similar to the OTA test and there is no interference from iron or nitrites. A third test for chlorine residual is known as the amperometric titration method. It is normally run in a laboratory.

The DPD test is a colormetric analysis. The reagent is added to a vile of sample water. Another vile of sample water serves as a "blank." If chlorine is present the sample will turn pink or red. The blank is placed in front of the "color wheel" and the sample is compared to the color wheel and blank. There are two chemical packets for the DPD test. One is used for free chlorine and the other is used for total chlorine residual. Subtracting the free residual from the total residual will give you the combined residual.

REFERENCES:

Sacramento, *Water Treatment Plant Operation*, 4th Edition, 1999, Volume 1, Chapter 7
Sacramento, *Water Treatment Plant Operation*, 4th Edition, 1999, Volume 2, Chapter 15
Sacramento, *Water Distribution System O&M*, 4th Edition, 2000, Chapter 6
Sacramento, *Small Water System O&M*, 4th Edition, 2001, Chapter 5

General Chlorine Safety

Chlorine is a greenish-yellow gas. It is 2.5 times heavier than air. Chlorine gas is very corrosive. It turns into hydrochloric acid when it comes in contact with moisture (in the water, in the chlorine lines, or in your eyes or lungs). It does not support combustion though. It can be harmful if inhaled in small quantities and fatal in larger doses. Chlorine leaks can be located using ammonia vapors. The following table lists the effects of chlorine gas in various concentrations in the atmosphere.

SYMPTOM	CONCENTRATION
Noticeable odor	0.2 ppm
Irritation after several hours	1.0 ppm
Irritation of throat after a few minutes	15 ppm
Immediate coughing	30 ppm
Dangerous after 30 minute exposure	50 ppm
Lethal in minutes	1000 ppm

Because of the potential for injury to workers and the general public from chlorine gas accidents, safety must always be the first consideration when it is handled.

CHLORINATOR ROOM

The chlorinator room should have a window in the door so that the operator in the room can be seen from the outside. The light and vent switches should also be located outside the room. The room should have ventilation located at floor level since chlorine gas is heavier than air and will settle in the lowest spot in the room.

The room should be kept between 60° F and 120° F. Below 60° F, chlorine gas forms chlorine hydrate, also known as “green ice,” when it comes in contact with water. This green ice can clog the injector and gas piping, creating a serious maintenance problem.

When a chlorine cylinder is full and at room temperature, it is about 85% full of liquefied chlorine. As the temperature rises, the liquid expands and takes up more space in the cylinder. At 157° F the liquid will expand to occupy 100% of the cylinder. If the liquid expands any further the cylinder will rupture, causing a massive chlorine leak.

NEVER enter a chlorine facility without ventilating for several minutes first. The National Fire Code now requires that new gas chlorine facilities be equipped with a scrubber system that will remove chlorine gas that may be present in the ventilation exhaust. These systems must have a backup power supply to keep the scrubber running in the event of a power failure. Check with local Fire authorities before new chlorine facilities are built to make sure they will be in compliance.

CHLORINE STORAGE

The room where chlorine cylinders or HTH drums are stored must be kept dry and well ventilated. Chlorine should always be stored in a room separate from other chemicals. Chlorine cylinders that are empty should be separated from those that are full. When not in use, all cylinders should be chained to the wall.

CHLORINE CYLINDERS

NEVER remove the valve hood from a chlorine cylinder unless it is chained to the scales and ready to be put on the system. All cylinders should be chained to the wall or the scales unless they are being moved. Emergency repair kits are available that can be used to seal leaks in the broken valves or leaking cylinders. Every system that operates a gas chlorine system should have an emergency kit or be able to get access to one on very short notice.

To prevent the cylinder from rupturing when it gets too hot, every gas cylinder will have a "fusible plug" that is designed to melt at 157° F. There is one in the valve assembly of every 150 lb. Cylinder and six (three on each end) in the body of every 1-ton cylinder. As one of these fusible plugs melts, it will allow the release of chlorine gas from the cylinder. This still represents a serious problem, but the release will be more gradual than it would if the tank ruptured.

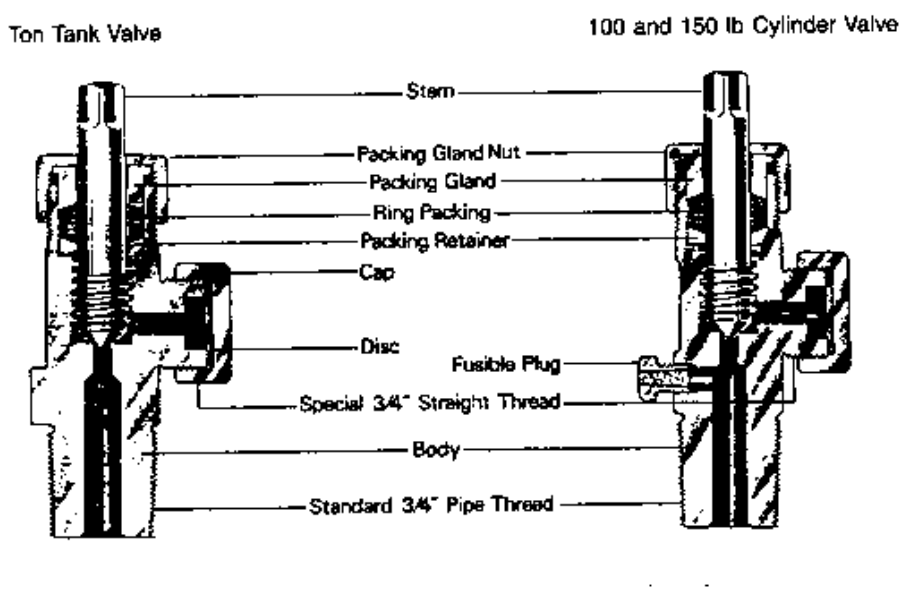

Chlorine Cylinder Valves

HTH HANDLING SAFETY

Powdered chlorine should be stored in a cool dry place separate from other chemicals. HTH must never be allowed to come in contact with petroleum products or organic solvents. If this happens, it will explode violently! This is also true for the other forms of chlorine, but is more likely to occur during the handling of HTH. Care must also be taken to avoid contact with the eyes or bare skin.

RESPIRATORY PROTECTION

Anyone involved in handling chlorine should have access to respiratory protection equipment. Chlorine gas forms hydrochloric acid when it gets in the eyes or lungs. This can result in serious injury or death depending on the concentration and exposure time. The damage caused by exposure to chlorine gas is cumulative. Several incidents involving minor exposure can contribute to serious health problems at sometime in the future.

There are two basic types of respiratory protection. One is the gas mask that uses a filtering device to remove chlorine. These are either a full-face mask or a mouth/nose type respirator. The other type of respirator is the self-contained breathing apparatus (SCBA). The SCBA unit is full-face mask with an air tank to provide the operator with fresh air to breathe when in hazardous atmospheres. Both of these devices may be rendered ineffective if the wearer has facial hair that interferes with the face-to-mask seal.

GAS MASKS

The gas mask is designed to allow the operator time to escape the chlorine room when a leak occurs. **THESE DEVICES ARE INTENDED FOR ESCAPE PURPOSES ONLY! A GAS CANISTER MASK MUST NEVER BE USED TO ENTER ANY AREA WHERE CHLORINE GAS IS PRESENT!** If the release of chlorine drops the oxygen concentration below 12%, it is impossible to survive even if all the chlorine is filtered out. If an operator is wearing a canister mask he must still leave the area immediately upon detection of a chlorine leak. The gas canisters should be changed every six months or anytime it has been exposed to chlorine gas.

SELF-CONTAINED BREATHING APPARATUS (SCBA)

The SCBA unit must be used when working in a chlorine gas atmosphere. It has an air tank that allows the wearer to breathe uncontaminated air while attempting to correct a chlorine leak situation. The SCBA tank will hold enough air for approximately 30 minutes, depending on working conditions. When the air pressure drops to a point where there is about five minutes of air remaining in the tank (500 psi), an alarm will ring to signal the operator that it is time to exit the area and change tanks.

CHLORINATION EQUIPMENT

There are two ways to feed chlorine into the water system. Gas chlorination uses liquefied chlorine gas. Hypochlorination uses a positive displacement pump to feed a solution of dissolved HTH or bleach into the system. Many smaller systems will use a hypochlorination system because the equipment cost is lower. The solution of dissolved HTH or bleach is much easier to handle and presents less of a risk compared to a gas system. Gas chlorinating is used where the system requires larger dosages of chlorine than can be delivered by hypochlorination. Though capital costs are higher for gas chlorination, the chemical costs are significantly lower than when HTH or bleach is used.

GAS CHLORINATION

A gas chlorine system consists of one or more gas cylinders connected to gas chlorinator. The gas chlorinator consists of a pressure regulating valve, a feed rate indicator, a flow regulating device (a V-notch plug or needle valve), and an injector or ejector. The chlorine pressure regulating valve (CPRV) opens when a vacuum is created by the injector and maintains a constant negative pressure inside the chlorinator. The feed rate indicator consists of a ball floating inside a glass tube. The feed rate is indicated on the glass tube and is read in "pounds per day." The feed rate should be read at the widest point of the ball or bead. The feed rate is controlled using the needle valve or V-notch plug. Water flowing past the injector creates a vacuum that draws the gas into the system.

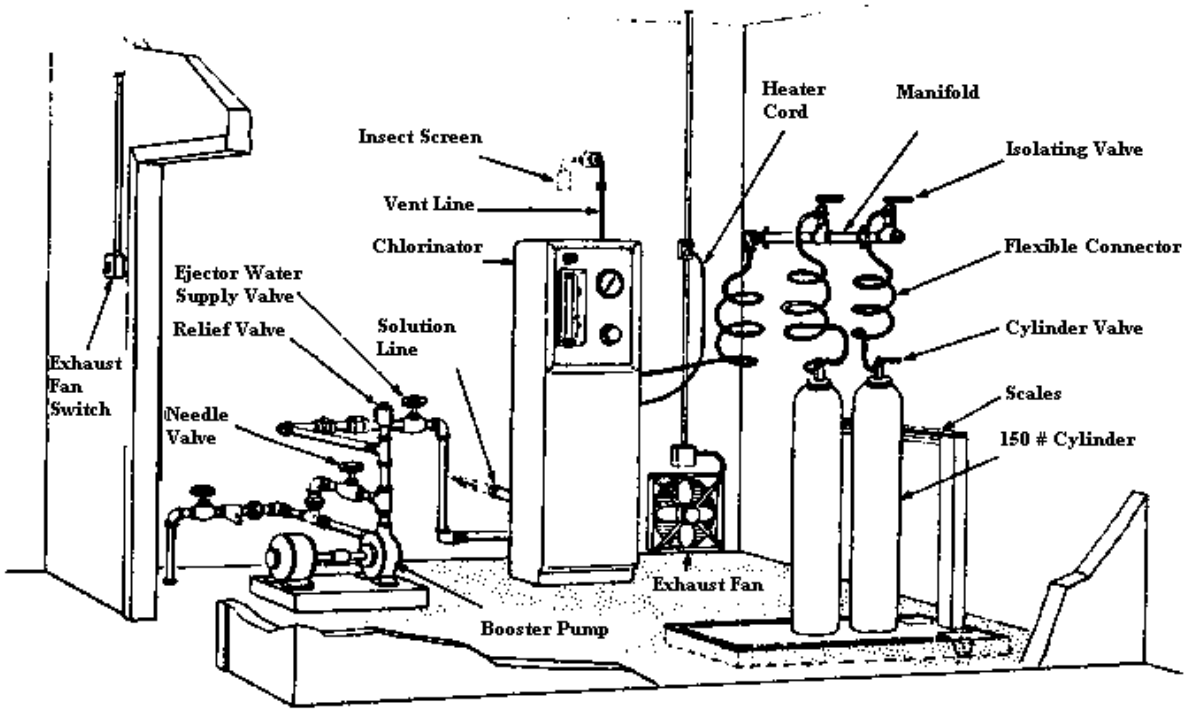

Gas Chlorination Installation (150 Lb. Cylinders)

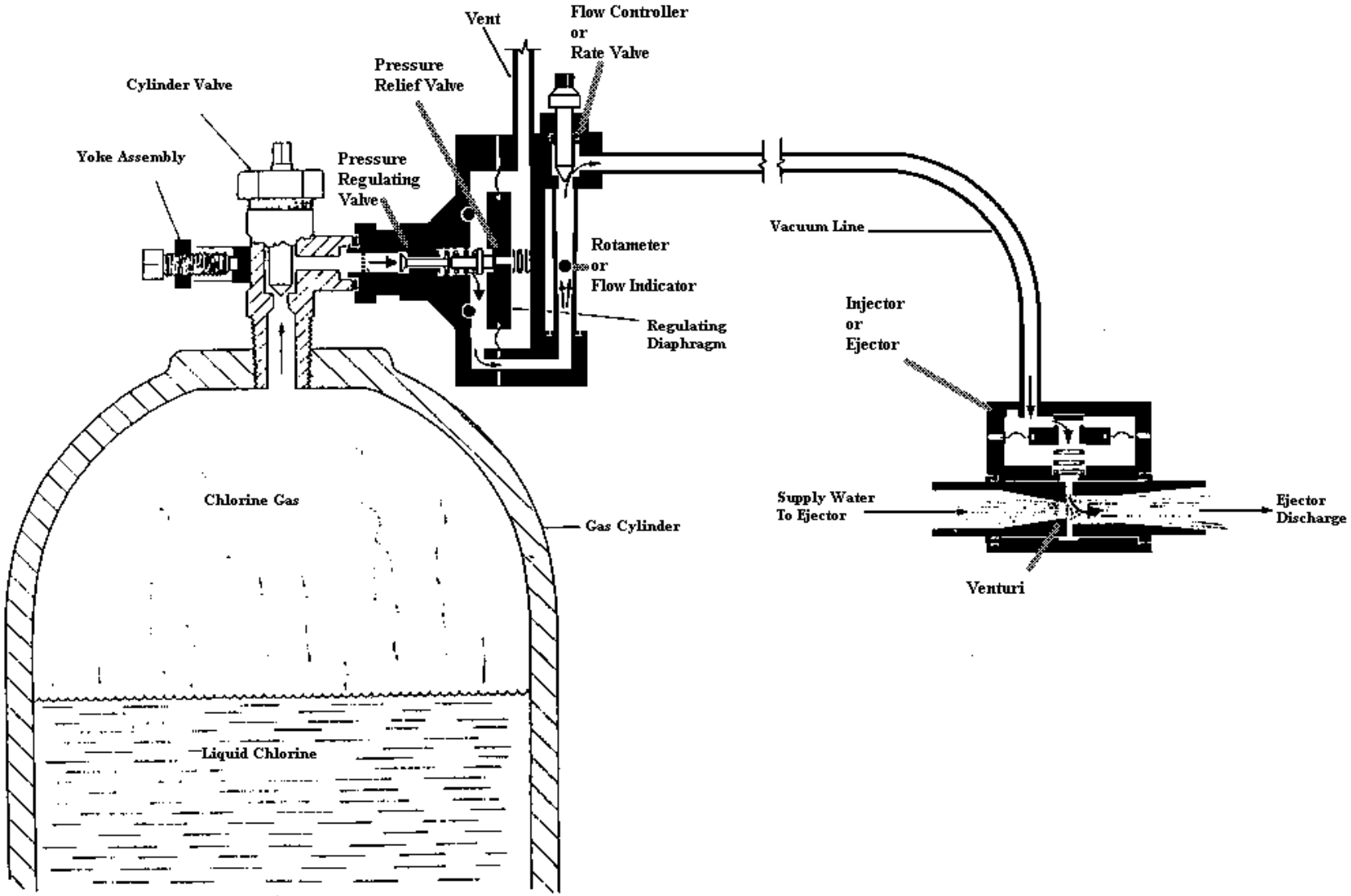
Vent
Flow Controller
or
Rate Valve
Pressure
Relief Valve
Cylinder Valve
Yoke Assembly
Pressure
Regulating
Valve
Vacuum Line
Rotameter
or
Flow Indicator
Regulating
Diaphragm
Injector
or
Ejector
Chlorine Gas
Gas Cylinder
Supply Water
To Ejector
Ejector
Discharge
Venturi
Liquid Chlorine

The maximum fed rate for gas drawn from a 150 lb. Cylinder is 40 pounds/day. The maximum gas feed rate for a 1-ton cylinder is 400 pounds/day. If these feed rates are exceeded, the tanks will frost over because heat can't pass through the tanks as fast as it is used to evaporate the chlorine from a liquid to a gas. This can also occur in situations where several tanks are manifolded to the chlorinator. If one of the cylinder valves is partially closed the other tanks may try to feed too much gas and frost over. When this happens, check the tank that isn't frosted for a closed valve or plugged pigtail line. Ton cylinders are sometimes set up to feed liquefied gas. These systems used an evaporator to change the liquid to a gas before it goes to the chlorinator. There is no limit to how much liquid chlorine can be removed from a cylinder since the heat for evaporation is supplied by an outside source. NEVER manifold cylinders together when feeding liquefied chlorine to an evaporator. Expansion tanks equipped with rupture disks are used to protect all liquid feed piping. These provide protection from expansion of liquefied gas that may become isolated in the line.

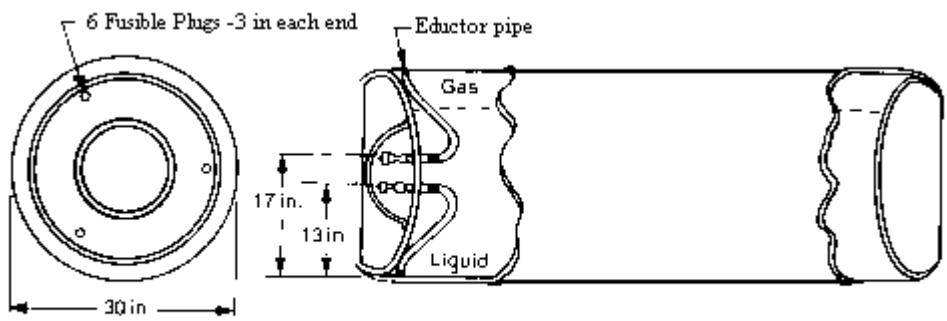

Cross Section of a 1-ton Cylinder

TROUBLESHOOTING GAS CHLORINATORS

Symptom	**Probable Cause**
Low Feed Rate and Low Vacuum	Clogged Injector/Ejector
Low Feed Rate and High Vacuum	Clogged Gas Feed Line Closed Cylinder Valve Empty Cylinder
Feed Rate Jumps	Clogged Flow Controller/Needle Valve
Feed Rate Won't "Zero"	Dirty Flow Indicator/Rotameter
Chlorine Gas at Vent	Dirty Pressure Regulating Valve
No Vacuum	No Supply Water Vacuum Leak

HYPOCHLORINATION SYSTEMS

A typical hypochlorination system will consist of:

- **A solution tank holding bleach or an HTH solution.**
- **A chemical feed pump, usually a diaphragm-type pump.**
- **A tee into the well line as the point of application.**

The solution tank should hold at least a one-day supply of chlorine solution. If the solution is bleach, it will have between 5.25% and 12% available chlorine (1/3 to 1 lb./gallon respectively). If HTH is used, add 1.5 pounds of HTH per gallon of water to achieve a 1.0-lb./gallon chlorine solution. Using breakpoint chlorination, adjust the stroke on the pump to achieve the desired dosage. Small systems may need to dilute the solution further, since the low flows may require feed rates too low for most feed pumps. Dilution of 5.25% bleach may be easier than HTH solutions.

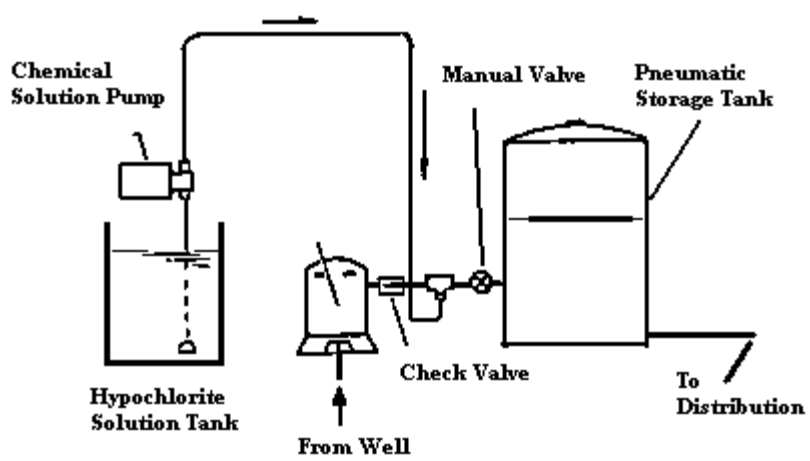

Typical Hypochlorination System

The chemical feed pump consists of a diaphragm driven pump chamber, and two check valves. The check valves, that provide the one-way flow through the pump, can get clogged with lime deposits. This occurs because the HTH that is added to the solution tank is 30-35% lime. The strainer on the pump suction line should be located several inches above the bottom of the solution tank to prevent lime and grit from being drawn into the pump and fouling the check valves.

If the check valves get fouled, the pump will not pump any solution. Flushing the line with clean water or a weak acid, like vinegar, may also correct the problem. In severe cases the valves may have to be disassembled and cleaned. Always make sure the pump is primed before putting it back into service. It may also be advantageous to locate the pump so that it has a positive suction head.

EMERGENCY RESPONSE PROCEDURES

When chlorine systems are located in areas where a chlorine release might endanger the general public, the water system is responsible for developing an emergency response program.

COMPONENTS OF AN EMERENCY RESPONSE PLAN

* **Containment and repair of the leak**
* **Notification of other emergency preparedness agencies**
* **Evacuation plans for the general public**
* **Medical evacuation for casualties**

The following steps should be followed when a leak poses immediate danger to employees or the public:

1) **Evacuate, in an upwind direction, to high ground.**

2) **Once evacuation is complete, notify emergency medical units of casualties and begin administering First Aid to the injured.**

3) **Notify local fire and police departments. Include the following information:**

   a) **Nature of the accident**
   b) **Approximate amount of chlorine that may be released.**
   c) **Location of chlorine facility**
   d) **Current wind direction**

4) **Notify County and State health agencies.**

REFERENCES:

Sacramento, *Water Treatment Plant Operation*, 4th Edition, 1999, Volume 1, Chapter 7
Sacramento, *Water Distribution System O&M*, 4th Edition, 2000, Chapter 6
Sacramento, *Small Water System O&M*, 4th Edition, 2001, Chapter 5

BASIC STUDY QUESTIONS

1. What is meant by disinfection?

2. What are some of the uses for chlorine other than disinfection?

3. What is a free chlorine residual?

4. What are trihalomethanes?

ADVANCED STUDY QUESTIONS

1. What two acids are formed when chlorine reacts with water?

2. Why should chlorine rooms be kept below 120°F?

3. What is the maximum gas feed rate for a 150 lb. Cylinder?

4. How should you handle chlorine odor complaints?

5. What additional pieces of equipment will be needed to feed liquefied chlorine gas from a ton cylinder?

BASIC SAMPLE TEST QUESTIONS

1. Locate chlorine leaks with:

   A. Bleach
   B. Ammonia
   C. Hydrochloric acid
   D. Water

2. Chlorine gas is 2.5 times heavier than air.

   A. True
   B. False

3. Chloramines are also referred to as combined chlorine residual:

   A. True
   B. False

4. If a single chlorine cylinder freezes, what is wrong?

   A. Valve is too far open
   B. Vacuum is too high
   C. Feed Rate is too high

5. Sodium Hypochlorite is what found in which type of chlorine?

   A. Bleach
   B. HTH
   C. Gas

ADVANCED SAMPLE TEST QUESTIONS

1. Breakpoint chlorination:

   A. Results in a free chlorine residual
   B. Occurs when a 0.5 ppm dosage increase raises the free residual by 0.5 ppm
   C. Very seldom causes chlorine odor complaints
   D. All of the above

2. Chloramines:

   A. Are a weak disinfectant.
   B. Are formed when chlorine reacts with ammonia.
   C. Are usually responsible for most chlorine odor complaints.
   D. All of the above.

3. If gas is venting from the relief valve on a chlorinator where should you look for the problem?

   A. The injector
   B. The rate of flow control valve
   C. The rotameter
   D. The pressure regulating valve

4. When two ton cylinders are feeding gas and one of them is frosted, what might be the problem?

   A. The feed rate is too high
   B. The line on the frosted tank is clogged
   C. The valve on the unfrosted tank
   D. The injector is clogged

5. There is low vacuum on the system and the flow rate is low when the rate valve is wide open, what is the problem?

   A. The feed rate is too high
   B. The injector is clogged
   C. There is a clogged feed line
   D. The rotameter is clogged

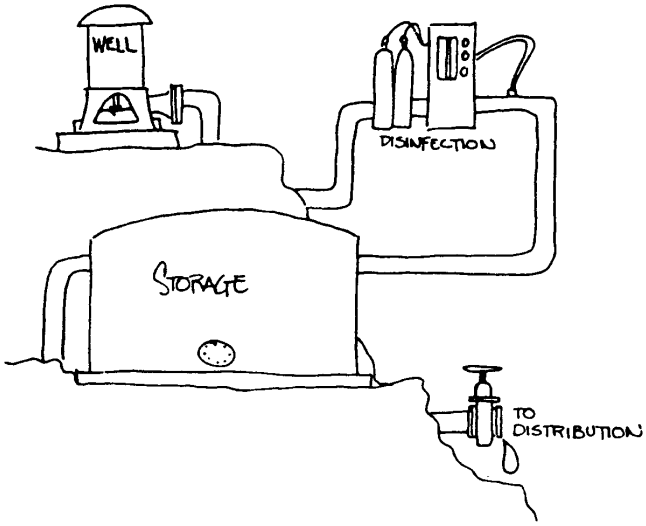

FLUORIDATION

Fluoride has been added to many water systems around the country for the past 40 years. It is used to prevent tooth decay. Fluoride makes the enamel of the teeth harder and more resistant to the bacterial enzymes and acids that can damage the enamel and result in cavities. The problem with fluoride is that it also causes the other bones of the body to become harder and more brittle. This can cause a higher than normal number of broken bones in older individuals that drink water with an excessive amount of fluoride. This is why fluoride is a Primary Inorganic contaminant and is regulated by the Safe Drinking Water Act. The MCL for fluoride is two-tiered. Notification is required at 2 mg/l and a violation occurs when the level exceeds 4 mg/l.

Fluoride can be naturally occurring in a groundwater system. If concentrations exceed the SDWA MCL, the system will have to notify the public that the standard has been exceeded every month. In systems with a high fluoride concentration, people will tend to develop gray or mottled teeth. The optimum range for fluoride concentration is considered to be between 0.8-1.2 mg/l. The range is based on average ambient air temperature. Higher annual average temperatures require lower dosages, since people drink more water when it's hot.

FLUORIDE FEED SYSTEMS

Fluoride is commercially available in several forms. It can be purchased in a dry form as sodium fluoride (NaF) or sodium silicofluoride (Na_2SiF_6). It is also available as a liquid. The liquid form of fluoride is available as hydrofluorosilicic acid (H_2SiF_6.) This chemical is also sometimes called fluosilicic acid and hydrofluosilicic acid.

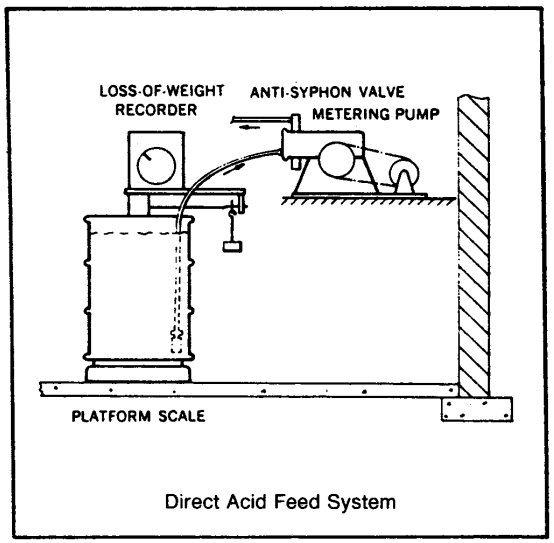

Direct Acid Feed System

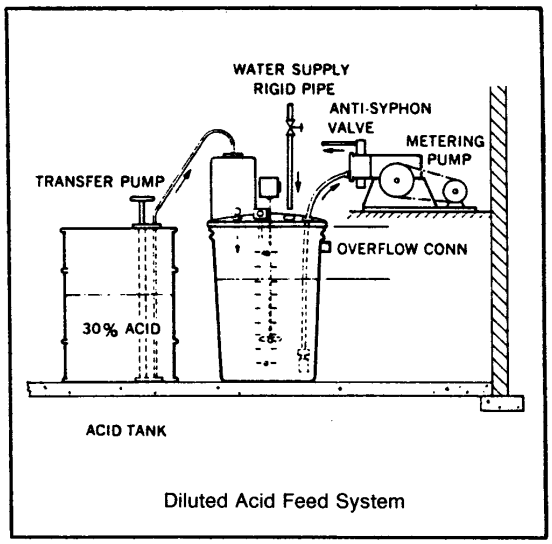

Diluted Acid Feed System

Fluoride is normally fed into the system as a solution, although dry chemical feeders can be used in very large systems. Hydrofluorosilicic acid is more commonly used for liquid feed systems. Positive displacement diaphragm metering pumps, like those used for hypochlorination sites, are used to feed the fluoride into the system. These pumps are subject to the same types of operational problems. These issues are covered in the Mechanical Systems O&M chapter.

SODIUM FLUORIDE SATURATORS

Small systems that use sodium fluoride will probably dissolve it and feed the solution with a metering pump. The equipment used to dissolve the dry chemical is called a saturator. At saturation the fluoride strength will remain constant. Water quality will impact the actual saturation concentration. Hard water can create scaling problems as calcium and magnesium fluorides precipitate out as scale. Water with over 10 mg/l of hardness can create scaling problems. Water softeners must be used upstream, in most cases, to prevent these scale deposits.

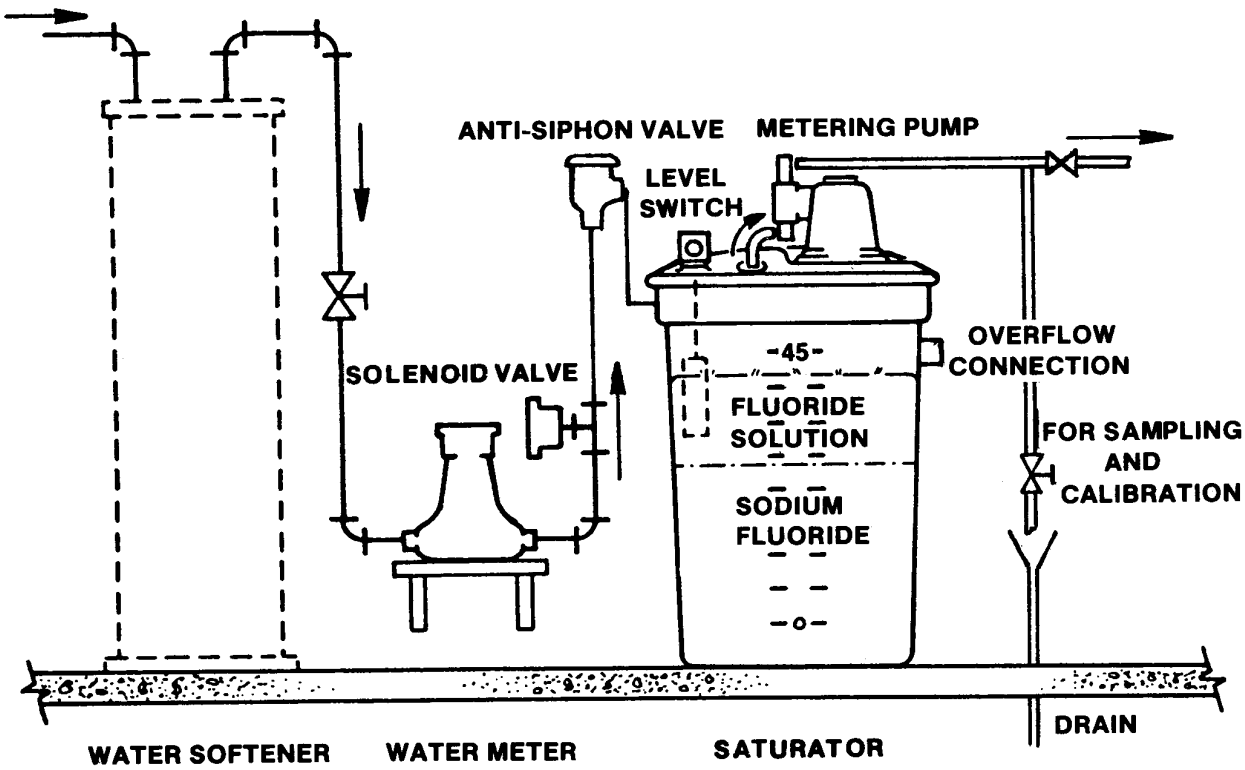

Sodium Fluoride Saturator

MONITORING FLUORIDE CONCENTRATIONS

A system that adds fluoride must take care not to overdose and exceed the SDWA MCL. Although a high concentration for a short duration will not cause any immediate health risks to customers, a violation of the SDWA will require public notification. This can lead to a public relations problem that could have been avoided with more careful monitoring. This is particularly important in systems that have naturally occurring fluoride in the raw water. Systems that add fluoride should monitor the concentration in the system on a daily basis.

REFERENCES:

Sacramento, *Water Treatment Plant Operation*, 4th Edition, 1999, Volume 2, Chapter 13
New Mexico *Drinking Water Regulations*

BASIC STUDY QUESTIONS

1. Why is fluoride added to drinking water?

2. Which chemicals can be used as sources of fluoride?

BASIC SAMPLE TEST QUESTIONS

1. What is the optimum concentration of fluoride in water?

   A. 0.2-0.4 mg/l
   B. 0.8-1.2 mg/l
   C. 2.0-4.0 mg/l
   D. 8.0-12.0 mg/l

2. What factor is used to determine the optimum dosage of fluoride?

   A. Air temperature
   B. Water temperature
   C. Fluoride solution temperature.
   D. pH

ADVANCED STUDY QUESTIONS

1. What type of equipment would be used to feed liquid fluoride?

2. Why is fluoride an Inorganic Primary Contaminant?

ADVANCED SAMPLE TEST QUESTIONS

1. Liquid fluoride is delivered as:

   A. Sodium Fluoride
   B. Hydrofluorosilicic acid
   C. Sodium Silicofluoride

2. If a system adds fluoride, fluoride testing should occur:

   A. Daily
   B. Weekly
   C. Yearly
   D. Every three years

DISTRIBUTION SYSTEMS

The distribution system is a network of storage tanks, pipes, valves, hydrants, service connections, and meters that are needed to get water from the point of production to the customer. The distribution system begins at the point where water enters the system at usable pressure. It ends at the customer's side of the meter installation. This chapter will seek to cover features common to most distribution systems.

PIPES

Several different types of pipe are used in distribution systems. They all have advantages and disadvantages related to cost, installation, strength, and corrosion. The most common types of pipe are known by their abbreviations.

ABBREVIATIONS FOR WATER PIPES

- **Cast Iron Pipe (CIP)**
- **Ductile Iron Pipe (DIP)**
- **Steel Pipe (ST)**
- **Asbestos-Cement Pipe (AC)**
- **Concrete Cylinder Pipe (CCP)**
- **Reinforced Concrete Pipe (RCP)**
- **Polyvinyl Chloride Pipe (PVC)**

CAST IRON AND DUCTILE IRON PIPE

Cast iron and ductile iron pipe are known for their strength and load bearing capacity. Most of the iron pipe that has been installed in the past 40 years is ductile iron pipe. Ductile iron is stronger and less rigid than gray cast iron pipe. The main disadvantages of iron pipe are that it is heavy and subject to corrosion from the inside and the outside. It should be coated with a corrosion resistant external coating and, in certain soil conditions, may require some type of cathodic protection to achieve its normal service life.

Cast and ductile iron pipes can be joined by several different means. Flanged joints are used above ground. The most common means of joining them underground are the bell and spigot (O-ring push-on) and the mechanical joint (MJ) connections. Care must be taken when installing and bedding. CIP and DIP are both brittle and don't flex. The bell holes should only be as wide as the bell portion of the pipe. Otherwise, stresses from improper bedding can cause it to crack.

STEEL PIPE

Steel pipe is lighter than iron pipe and is easier to handle and install. It is more flexible than iron pipe and doesn't require as much care when bedded in the trench. The main disadvantage of steel pipe is that it is very susceptible to corrosion and should be coated both inside and outside. It doesn't have the same bearing strength that cast or ductile iron does and may collapse under vacuum conditions. Steel pipe may be joined the same way that cast is joined. It may also be joined using threaded connections.

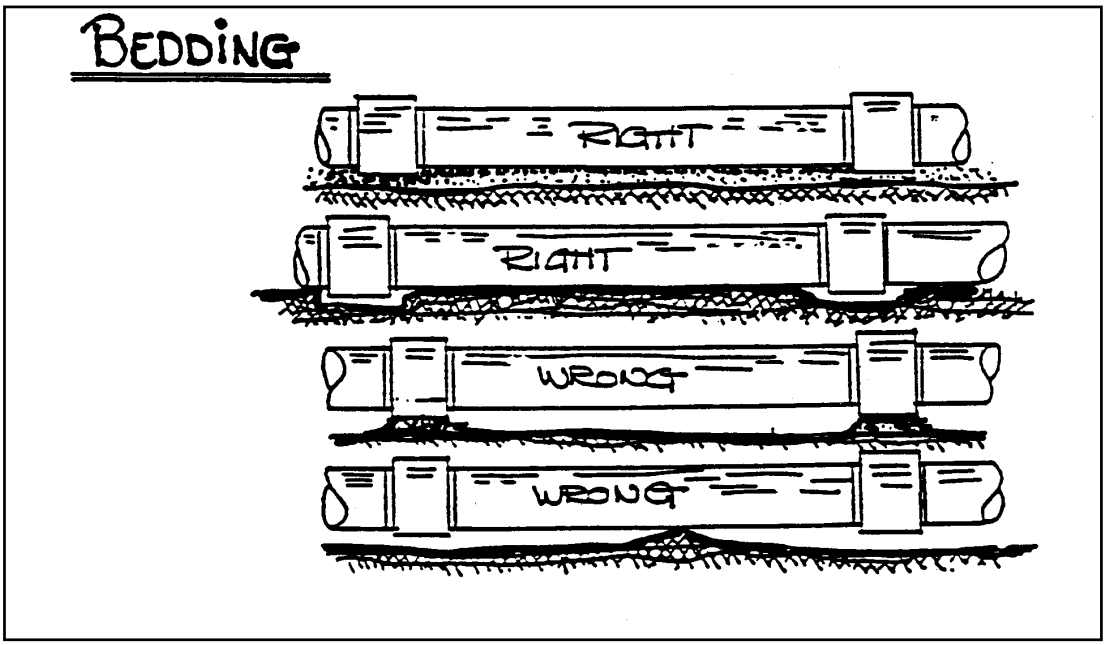

ASBESTOS-CEMENT PIPE

Asbestos-cement pipe is frequently used as a main line since it is less expensive than cast iron. It is lighter than iron pipe and more easily installed and tapped. AC pipe is joined using sleeved couplings and O-rings. It also resists corrosion and tuberculation. One of the disadvantages of AC pipe is that asbestos is a known carcinogen. This presents more of a hazard to the operator working on the pipe than the customer drinking water from it. The dust created from cutting the pipe during repair and installation should be a cause for concern and respirator protection should be worn by all workers in the area. The other disadvantage is that the pipe is brittle and tends to crack under stress from trench loads. AC pipe must be as carefully installed and bedded as cast iron and is even more difficult to repair than cast iron. Cracked AC pipe must be cut out and spliced.

POLYVINYL CHLORIDE PIPE

There are a number of different types of plastic pipe available for use in water distribution systems. Polyvinyl chloride or PVC is the most popular pipe for small community water systems. PVC pipe is lightweight, easy to install and repair, available in a wide range of sizes and strengths. PVC is also unaffected by corrosive water and soil and, because it will not conduct electricity, is not subject to galvanic corrosion or electrolysis. The main disadvantage of PVC pipe is that it has a high rate of thermal expansion. It is also relatively fragile and must be protected by the use of select backfill material.

SPECIAL CONSIDERATIONS FOR LAYING PVC PIPE

It has already been stated that the main disadvantage in laying plastic pipe is its thermal expansion. As the ground temperature fluctuates the pipe will become longer as the soil gets warmer and shorter as it gets colder. This presents problems that are not normally encountered in laying other types of pipe. The pipe may either stretch or shrink several feet to every thousand feet of straight run. The first place this stress is felt is at the pipe joints. These joints are usually formed by using a solvent and glue. Each joint must be properly sealed to prevent separation as the pipe contracts in cold weather.

The weakest joint will be the first to separate. A flexible coupling may be used instead of the bonded joint. These couplings allow for a small amount of compression and expansion at each joint and help to relieve the stress caused by the contraction. O-ring joints are also used to join sections of pipe. An O-ring is inserted in the well end of the pipe. A lubricant is applied and the tapered end of another section of pipe is slipped into the bell containing the O-ring.

BACKFILL CONSIDERATIONS

The type of backfill material used is also a very important factor in the protection of all pipes, especially plastic pipe. If rocks or other abrasive material are present in the backfill, a sharp edge may cut into the line and cause a leak to develop. To prevent this kind of damage from happening a select backfill material, preferably sand, should be used. The backfill should be carefully added and properly tamped to help support trench loads. The backfill material should completely surround the pipe. It should be tamped when the pipe is still half exposed and again when the pipe is covered by about 6 inches of material.

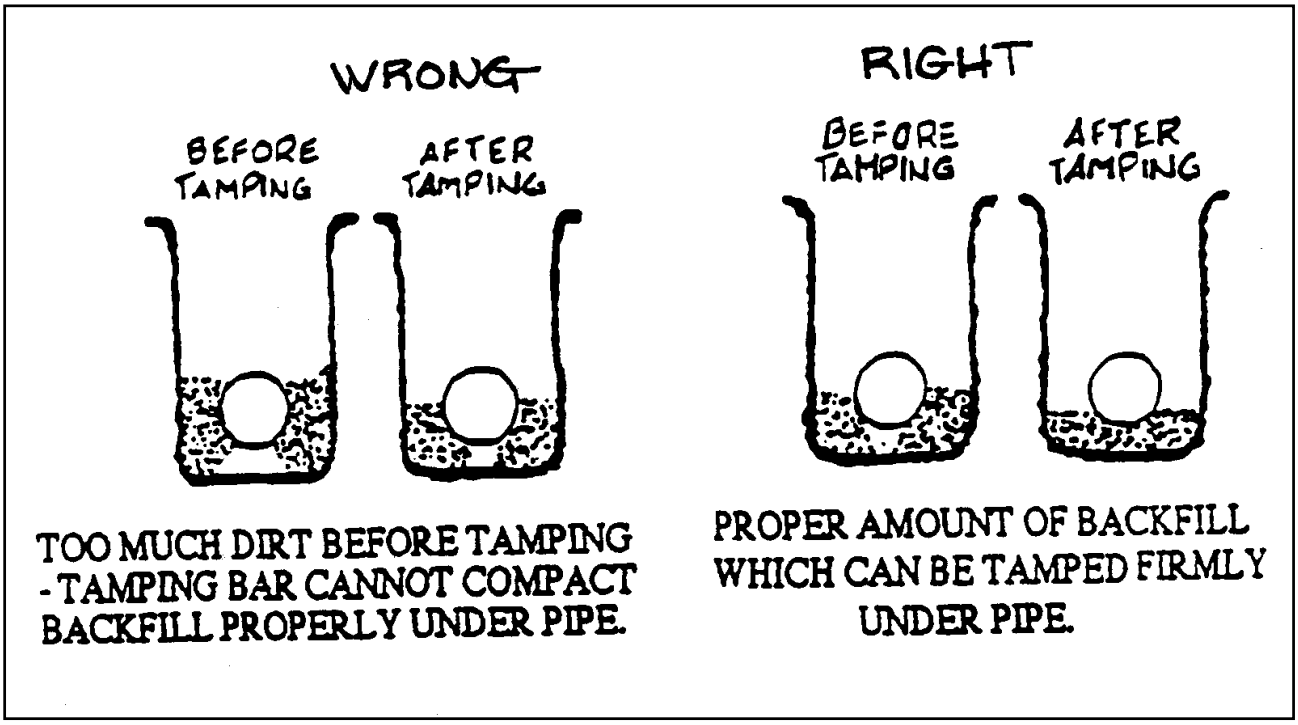

Plastic pipe should not be used under railroad crossings, highways, or anywhere that vibration and stress loads are a problem. These situations call for iron or steel pipe that can withstand these external pressures. If a plastic line is used, the PVC pipe should be installed in a steel conduit. Even if the reinforced PVC is used, a conduit is worth its cost. In addition to this, a conduit will make it much easier to replace the damaged water main. Keep PVC water lines as far as possible from highway right of ways. All easements to both highways and private property must include access for construction, repair and inspection.

Finally, PVC lines are impossible to locate with a metal detector. This can present problems when repairs must be made. To remedy this situation, a roll of metallic tape can be used to mark the line. After the backfill has been tamped properly the tape should be placed on top of it prior to refilling the trench. This can be located with a metal detector and save time and effort when repairs must be made.

PIPE PRESSURE RATINGS

Some types of pipe are available in more than one pressure rating. PVC pipe is available in several pressure ratings. Schedule 40 and Schedule 80, the latter being rated at a higher pressure, are the most common types of PVC. The difference in the dimensions of these two is in the pipe wall thickness. They will both have the same ID, but different outside diameters, requiring different sizes of clamps or fittings.

SEPARATION OF WATER AND SEWER LINES

When installing new water lines certain precautions must be taken when crossing or laying parallel to sewage lines. To prevent cross-connections or contamination of the drinking water, the water line should be separated by at least 10 feet horizontally when the lines are side by side. If the water line crossed a sewage line, the water line must be on top and the lines separated by a vertical distance of at least 18 inches. If the sewer line crosses over the water line it must have a 20 foot water-tight casing around it with the water line being 10 feet from either end of the casing. It is preferable to cross as close as possible to the middle of the section of water line so the ends of both lines are as far from each other as possible

CLEANING WATER LINES

Some systems find that the build up of scale, tuberculation, or bio-slime can reduce the carrying capacity of the distribution system piping. Pigs can be used to clean the inside of the piping. A pig is a bullet shaped foam swab that can be pushed through a pipe to clean it. The pig must be inserted through a special launch site and is propelled through the pipe by water pressure until it reaches an extraction point. It scours the line and pushes the debris ahead of it.

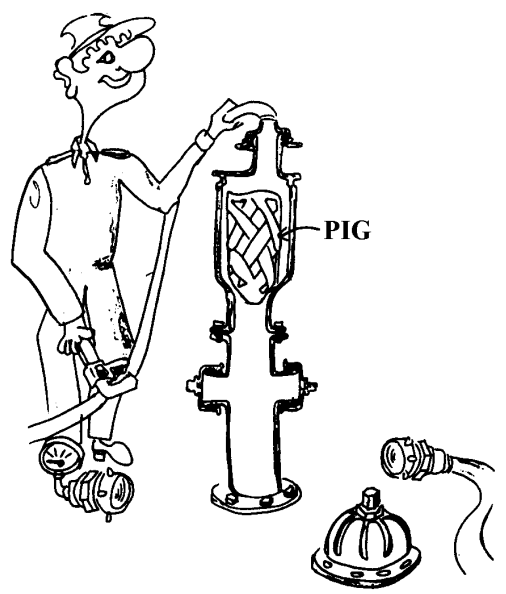

Launching A Pig

WATER LINE REPAIRS

Broken water lines are a major concern of all water operators. They not only create the problem of disruption of service but also represent the loss of revenues from the water that is lost. This can result in excessive amounts of water that is unaccounted when comparing production and billing. This level should not exceed 10% of production. The first concern when a leak is reported, or detected by a rapid drop in the storage level, is to locate the point where the line is broken.

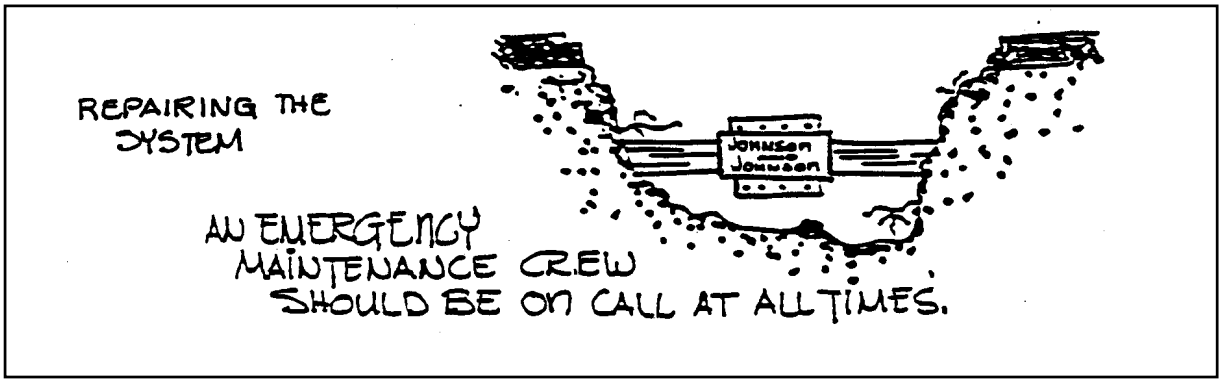

LOCATING LEAKS

Often large leaks will be spotted and reported by customers. If not, look for grass and weeds that are greener and larger than others during the growing season. For rural areas, one method of locating losses in excess of 10% is to isolate valves to guide you to the source of the leak. This method works only when the system is as near static conditions as possible. This means working at 2 - 3 am when demand is at its minimum. First, shut off any pumps, so water will be flowing only from the storage tank into the distribution system. If you are purchasing water, close the valve near the master meter.

Now that you know from which direction water is flowing, go to the first valve on the main line and slowly begin to close it. When the valve is almost closed, place the bottom of valve wrench on the valve nut and the top against the bone in front of your ear. If water is moving rapidly through the valve, you will hear a "singing" noise. If you hear no such noise, then the leak is a small one or the cause of the water loss is not a leak. If you did hear the "singing", completely open the valve and go to the next valve on the main line and repeat the procedure. If the noise is again heard, open the valve and continue to the next one.

Continue to go to each valve until you come to one where the noise cannot be heard. That tells you that there is a leak between this valve and the last one. If there are several branch lines between the two valves, partially close each and listen to it. When the right line is located and if it is several miles long, continue to move down the line listening to valves. When the source of the leak is isolated within a certain section, the remaining work can be accomplished during a more reasonable daylight hour. Be certain that all of the valves that were closed are opened and any pumps turned back on.

During the day, close the valves, on each end of the section to be isolated. Turn off all of the curb stops on that line except one. At that one residence, connect a pressure gauge and watch it closely for thirty minutes. A slow continuous drop in pressure would indicate a leak. A steady pressure followed by a quick drop would indicate an illegal tap or that someone has turned their water back on.

If there is a leak, walk directly over the line in that section and note any damp areas, areas of very green and large grass and weeds, or an unusual collection of insects. If snow is on the ground, note any melted spots directly over the line. Another method of locating a leak that has not surfaced is to drive a metal rod into the ground and note if the end of the probe is wet or if water begins to rise in the hole that is created.

REPAIRING THE LEAK

Once the leak has been located it is a good public relations practice to inform residents in that area that service may be interrupted while the repair is being made. All businesses in the area should also be notified so that equipment that might be damaged by the loss of water service can be shut down. This may take a little extra time but may also save a lot of unnecessary hard feelings between customers and the water system.

1. Assemble the proper equipment and notify the customers of the interruption. If the work is going to happen at some time in the future, notification should happen at least 24-48 hours in advance.

2. Isolate the break by shutting all gate valves necessary to stop the flow of water. Tag each valve according to OSHA LOTO guidelines. Identify all closed valves on a map.

3. Mark the line using a line locator or probe. A line can also be spotted by siting along two or more valve cans. Line spots should also be called in for other utilities before attempting to excavate the leaks. These include the gas service, phone service, cable TV, sewer lines or electrical cable.

4. If the excavation is going to be over 5 feet deep, make sure that the proper shoring equipment is available or that enough of the street has been closed to adequately slope the trench according to OSHA guidelines. The area around the leak should be large enough to work comfortably, usually one foot on either side of the pipe. A sump hole is dug at one end of the trench to allow the water to flow away from the leak and be pumped or dipped out. Any excavation that is over four feet deep must have a ladder for access. The ladder must extend at least 3 feet above the excavation. They must be located so that no workers are more than 25 feet from a ladder. All spoil must be at placed at least 2 feet from the side of the trench.

5. The type of repair clamp or coupling is selected once the line has been uncovered. A wrap-around repair clamp can be used if leak is a hole from a blown service or puncture. Lines that developed cracks along the length of a pipe should be cut out and a new section spliced in with compression couplings. Once the damaged section has been removed it is a good idea to flush the lines out to remove any foreign matter that may have been sucked into the line. Compression couplings are used to reconnect the new section of pipe to the existing line.

6. Backfilling the excavation should be done by hand at first preferably with sand or gravel. The area underneath and beside the clamp or new section of line should be built up to support the line and 4 to 6 inches of material shoveled in on top of the line. This should be tamped carefully to avoid damaging the clamps and couplings. Once this is completed the ditch may be filled in with the backhoe and should be tamped in 12-18" lifts.

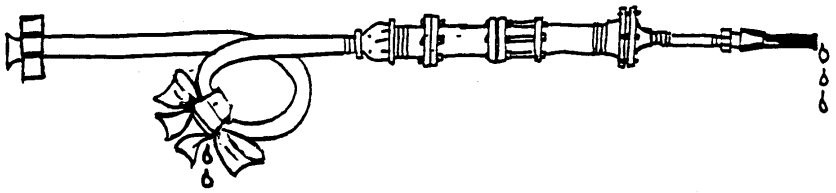

7. Refill the line by carefully cracking a valve low end of the line and opening a hydrant or service to vent air out as it fills. Air relief valves can also be used as vents if they are present on that particular section of pipe. The velocity of the water in the line should be kept below 1 fps and should always be controlled from the fill valve rather than the vent valve. If allowed to fill to quickly, water hammer can occur when the water finally fills the pipe.

8. Reopen all gate valves that were closed and double check to make sure the repair is not leaking. Prior to putting the line back in service, it should be disinfected and have BAC-T samples taken.

DISINFECTION OF WATER LINES

Newly laid water lines or lines that have been repaired should be disinfected before they are put into service. This procedure is standard for all water system components including wells and reservoirs. There are four steps that should be taken to insure that the line has been properly disinfected.

1. Flush the line. This will remove any dirt or debris that may be in the line. Flushing it out is easier than burning it up with chlorine. Minimum velocity should be 2.5 fps. Flushing should continue until an amount of water equal to twice the pipe volume has been discharged.

2. Disinfect the line. Enough chlorine should be added to create a 50 mg/l dosage with a 5 mg/l residual after 24 hours. In some instances a higher chorine dosage can be used and the contact time can then be reduced.

3. Flush the line again. This should be done long enough to remove all of the chlorinated water so that "Bac-T" samples can be taken.

4. After the line is refilled, take BAC-T samples from the line. If negative results come back, the line is ready to be put into service.

The chlorine should be added at the same point that the water is introduced back into the line. A solution of HTH or, in most small lines, household bleach is normally fed through a corporation stop with a solution pump as the line is slowly filled. Dry HTH should not be put directly into the line or it will be washed to the far end before it dissolves.

In the case of some line repairs, it may not be feasible to keep the line isolated while waiting for the sample results. An acceptable alternative to this procedure is to flush the line with water that has a free chlorine residual of 0.5 to 1.0 mg/l. Take the BAC-T sample and maintain the chlorine residual until the negative test result returns.

REFERENCES:

Sacramento, *Water Distribution System O & M*, 4th Edition, 2000, Chapter 3
Sacramento, *Water Distribution System O & M*, 4th Edition, 2000, Chapter 5
Sacramento, *Water Distribution System O & M*, 4th Edition, 2000, Chapter 6

DISTRIBUTION SYSTEM VALVES

Valves are used to control flow in a water system. Most of the valves in a distribution system are installed for isolation of sections of piping for maintenance and repair. Control valves like pressure reducing valves, altitude valves, pressure relief valves, pressure sustaining valves, and pump control valves are designed to control pressures and throttle flows to prevent damage to the system. Air relief valves can vent trapped air from the system. Check valves allow water to flow only in one direction.

GENERAL VALVE MAINTENANCE

Valves on the water system should be completely closed and then reopened at least once a year. If not, they may become frozen and inoperative when isolation is necessary. An up-to-date map should be kept of all the valves in the system plus an individual record of each valve.

GENERAL VALVE MAINTENANCE DATA

- Location of the valve from a reference point
- Type and size of valve
- Make of the valve
- Number of turns to open/shut
- Dates it was operated
- Date it was repacked or repaired
- Condition of the valve

Always check the valve stem for leaks. There is a stuffing box on the valve body where the shaft enters the valve, just like on a centrifugal pump. The difference is that, unlike a pump, the packing gland should be tightened to prevent leakage. The packing seldom wears out, since the valve stem doesn't move often. If it does wear out, the stuffing box can be repacked like a pump. When a valve must be disassembled, the valve seat, the valve face, and the disc should be checked for damage.

GATE VALVES

Gate valves are the most common valves in a distribution system. They are used for isolation of equipment and piping. They should never be used to throttle flow. This will cause damage to the valve face. Open gate valves have the less friction loss than any other type of valve. Gate valves can have plug type disks or split gates. Split gates are used in higher pressure applications. Gate valves can also have rising or non-rising stems. A rising stem is threaded to the valve body and will rise as the valve is opened. Some types of rising stem valves are called outside yoke and stem (OS&Y) valves.A non-rising stem is threaded to the gate assembly and lifts the gate without rising. Non-rising stems are found on all large buried valves. The number of turns needed to open or close a gate valve that is not gear reduced is equal to 3 times the diameter plus 1-3 turns to seat properly. So a 6" valve will take 3 x 6 = 18 + 1-2 or about 19-20 turns to close. Larger valves will take 2-3 extra turns.

Large gate valves may have a much smaller bypass valve that is piped in around the large valve. In a distribution system, the water pressure can create tons of force against the valve face. When one side of the valve has been de-pressurized for some reason, the force against the other side can make it impossible to open the valve. The stem will break instead. The bypass valve is much smaller and

easier to open (less total force on a smaller surface area.) When the pressure has equalized on both sides of the large valve, all the stem has to do is lift the weight of the gate assembly.

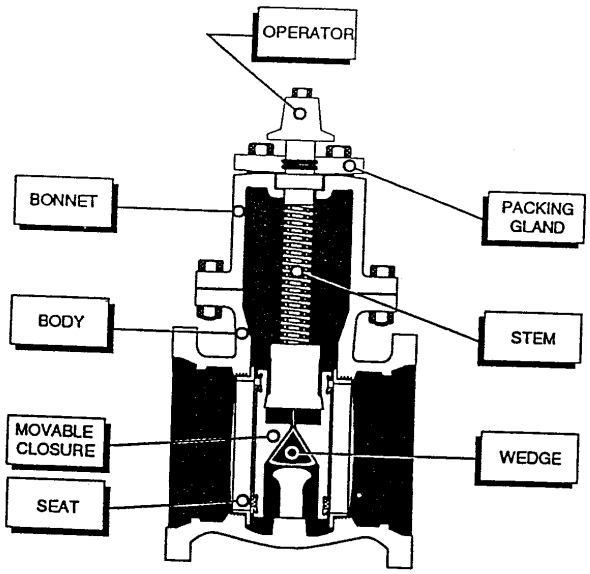

Non-Rising Stem Gate Valve

BUTTERFLY VALVES

Butterfly valves serve the same purpose as gate valves. These valves usually open and close with ¼ of a turn of the valve disc. Larger valves will have a gear box on the stem and will require a number of turns to open. Butterfly valves are easier to open than gate valves, usually without the need for a bypass, but have more friction loss when open. They can also be used for throttling flow without damaging the disc. Caution should be used when filling a line through a butterfly valve. When a butterfly valve is 30% open, it can pass 90% of its rated flow. Small butterfly valves will simply have a handle, instead of a threaded stem. The handle is normally aligned with the valve disc. When the handle is in line with the pipe, the valve is open. When it's perpendicular to the pipe it's closed.

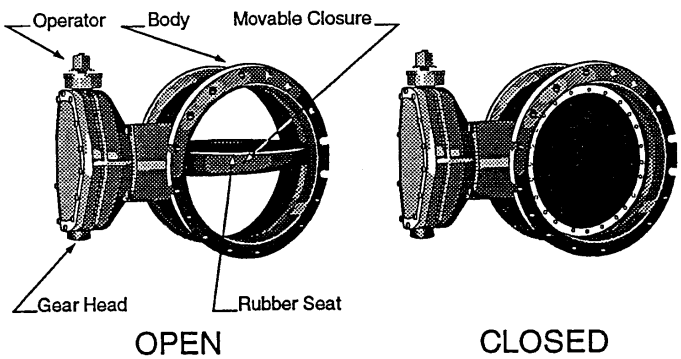

Butterfly Valve

BALL OR PLUG VALVES

Ball and plug valves are similar to butterfly valves. They have a ball or cone-shaped plug that has a hole in it, instead of a disc. They open and close with ¼ turn. They are the second most common types of valve on most systems. They are used as corporation stops on service lines, curb stops on meter setters, and isolation petcocks on control valve pilot piping. They are seldom used in sizes above 2 ½".

CHECK VALVES

Check valves are used where flow of water should be in one direction only. The swing check valve should be operated in the horizontal position and the lift check valve is operated in a vertical position. These type of valves are most commonly used on the discharge side of the pumps to prevent backflow and as foot valves on the bottom of suction piping to prevent loss of prime to the pumps.

AIR RELEASE VALVES

Air release valves are used to allow air that may be trapped in the line to escape. The trapped air can create pressure and pumping problems, milky-water complaints, and pressure spikes that resemble water hammer. They are very useful in systems that are in hilly country. They should be located at the top of hills where the trapped air will collect. They are also used on booster pumps and wells to removed trapped air. Combination air release valves will also let air in when a vacuum occurs. This is done to protect the piping. They can also be used to vent a line that is being drained.

CONTROL VALVES

Control valves are usually one of the least understood components of a water system. They are designed to control the flow of water by reacting to changes in the system and automatically opening or closing the valve to compensate. They are globe valves. They share the same basic design as a hose bib valve. The difference is these valves are hydraulically operated, diaphragm actuated, globe valves. The type of pilot or control mechanism that is placed on the valve determines the specific use of a control valve. A control valve can be used as an altitude valve, a pressure reducing valve, a pressure relief valve, a pressure sustaining valve, a pump control valve or a check valve.

ALTITUDE VALVES

An altitude valve is a control valve that is designed to close when an elevated storage tank is full. They are needed when there are several storage tanks at different elevations in a system. Altitude valves will be used on the lower tanks to prevent them from overflowing. Each valve will isolate its tank so that the top tank can be filled and not drain out through the lower tanks. This is one of the most common uses of control valves in water systems. The height of the water in the tank can be adjusted by turning the adjustment nut or screw on top of the pilot mechanism. Tighten the nut down to raise the water level and loosen it to lower the level. Adjustments should be made in very small increments and several adjustments may be necessary before the proper level is maintained.

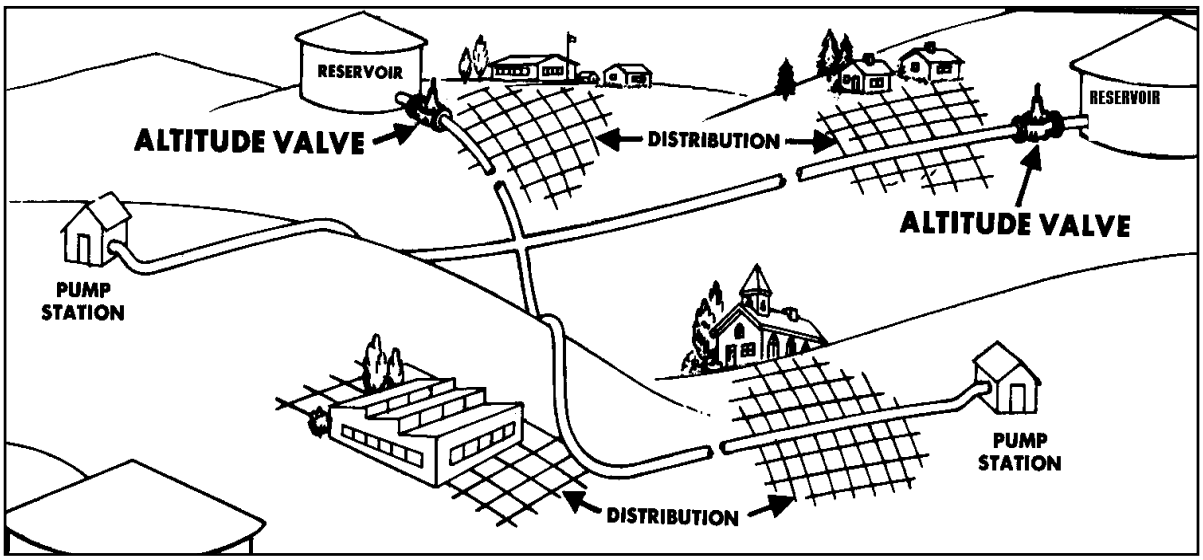

PRESSURE REDUCING VALVES

Another common use of a control valve is found in areas where the differences in elevation in the system create unacceptably high water pressures in the lower elevations. With the proper controls, a control valve can reduce and maintain a steady pressure on the downstream side of the valve. The setpoint for the downstream pressure can be increased and decreased by tightening and loosening the pilot control screw. There is a maximum and minimum flow that a PRV can handle. When the flow drops too low the valve will chatter or start slamming open and closed. This will create severe water hammer problems. To avoid this problem, PRV's are sometimes installed in pairs with a small valve in parallel with the larger valve. The small valve is set at a higher pressure. This will allow it to handle the low flows and keep the large valve shut so it doesn't chatter.

PRESSURE RELIEF VALVES

Pressure relief valves are used to provide protection against high pressures that may develop in the system. They should be located in any part of the system where pressure is controlled by a pressure reducing valve. They are also used at booster pump stations and on wells that discharge directly to distribution. When the valve senses a high pressure upstream, it will open to pass enough water to drop the pressure back down to setpoint. The water is discharged to a storm sewer or ditch. If the pressure upstream drops, it will close automatically. The setpoint should be about 10-15 psi higher than the normal system pressure at that location.

PRESSURE SUSTAINING VALVES

In some systems there are areas of very heavy water demand that can sometimes "rob" the pressure of upstream areas. The control valve will act to maintain the desired upstream pressure during these conditions and throttle the flow of water to the area of heavy demand.

FIRE HYDRANTS

The fire insurance rates for residents on the system will be dependent, in part, on the proper spacing and discharge capabilities of the fire hydrants in the system. Hydrants should not be more than 500-600 feet apart in residential districts. The spacing requirements in industrial and rural districts may vary. They should be located at the end of every dead end line. Hydrants should be operated every 6 months and flow tested annually.

Fire hydrants should never be placed on less than a 6 inch line if it is to be used for fire protection. In addition to provide fire protection, hydrants can also be useful for flushing lines, venting lines as they are filled, and pressure and flow testing. Hydrants on smaller lines (4 inch and down) will not supply enough water to fight a fire but may be used to flush dead end lines. The traffic model of a dry barrel hydrant comes with special breakaway unions on the stem and flanges on the upper barrel that allow it to break cleanly if hit by a vehicle. Hydrants must be installed with the nozzles at least 18 inches above grade. This is the clearance needed to operate a hydrant wrench when removing the nozzle.

Care must be taken to avoid damaging landscaping or creating a safety hazard in traffic when flushing a hydrant. There are two types of fire hydrants used in water systems; wet barrel and dry barrel. A wet barrel hydrant is always pressurized and the main valve is at the top of the hydrant barrel. A dry barrel hydrant has the valve at the bottom of the barrel and a drain hole that drains the barrel when the hydrant is closed. These hydrants are used in areas where freezing occurs in the winter. Never operate a dry barrel hydrant with the main valve cracked to throttle flow. The drain hole will be open, and jetting water to undercut the sidewalk and hydrant, anytime the main valve is not completely open.

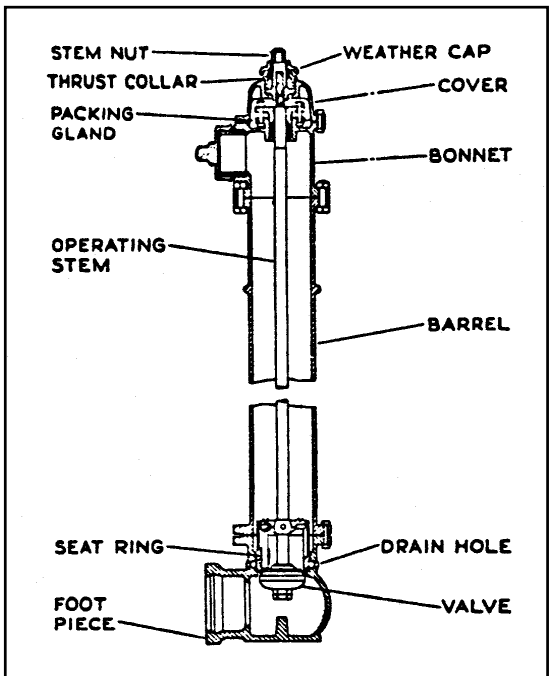

Dry Barrel Hydrant

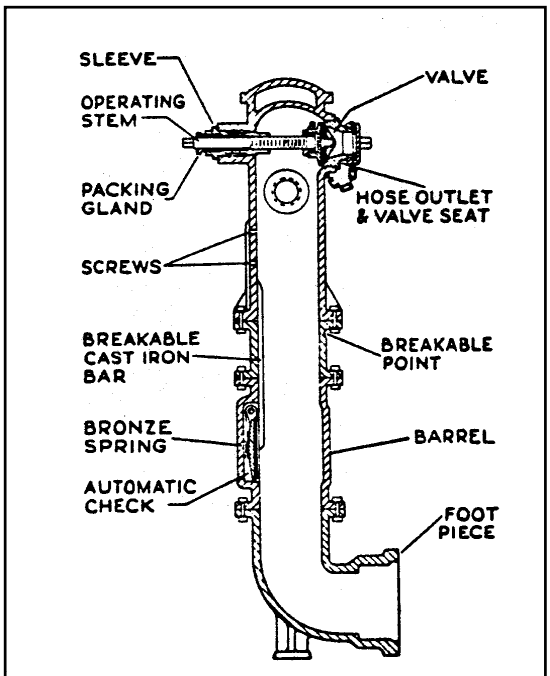

Wet Barrel Hydrant

REFERENCES:

Sacramento, *Water Distribution System O & M*, 4th Edition, 2000, Chapter 3

SERVICES

Services connect the customer to the main in the street. Services are installed using a tapping machine to drill and connect a corporation stop to the main. The tap is normally done while the main is under pressure. This is called a "wet" tap or "hot" tap. Taps can be made by inserting the corp stop directly into the main or the corp stop can be installed on a saddle that's strapped to the pipe. Taps should be made at a 45° angle from horizontal so that they are less likely to be pulled by a backhoe.

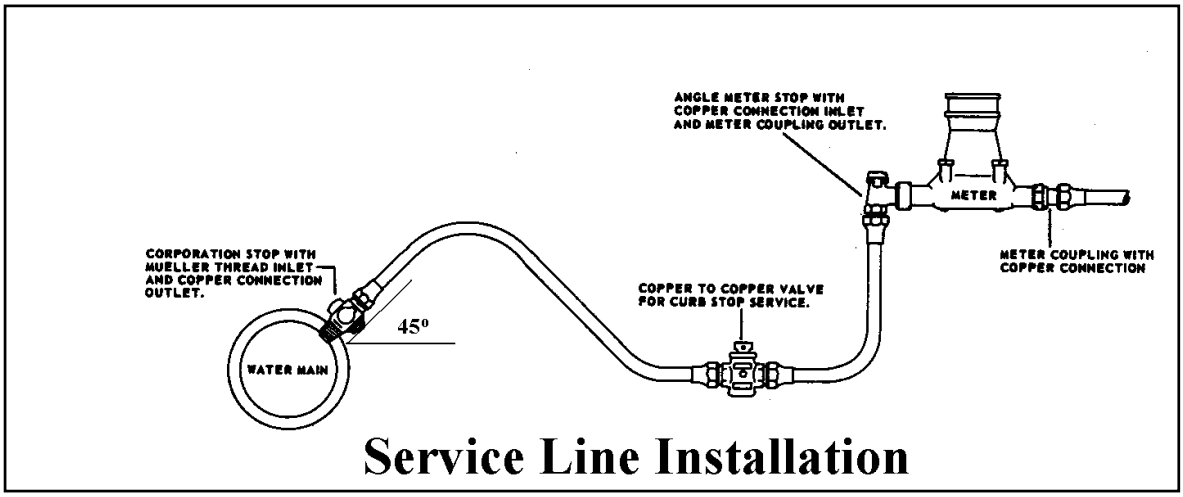

Service Line Installation

The service line is usually copper, PVC or polyethylene pipe. Galvanized and lead services should be replaced, since the former is prone to corrosion and the latter can cause lead problems if the water is corrosive. The service line should have a bend or goose neck in it at the corp stop. This will allow the service to flex slightly if the trench or piping shifts after backfill. A curb stop should be installed in the easement so that the service can be isolated. Sometimes a meter stop on the yoke is used instead of a curb stop. A service line leak may require killing the main or using a crimping tool to isolate for maintenance when a meter stop is used. Service lines and meters must be laid below the frost line for the area or freezing will become a problem in the winter.

WATER METERS

The meter is the primary piece of equipment in a water system that has a direct bearing on income. It is the cash register for the system. Many small systems do not have meters. Billing is based primarily on the size of the service and is a fixed rate. Water meters encourage conservation and distribute the cost of service in proportion to its use. Even though they are critical to maintaining the cash flow for a system, meters tend to be neglected more than any other piece of water equipment. An inaccurate meter cheats the water system and also all the customers whose meters are accurate.

When a meter becomes worn or broken it always under registers and will give water away to the customer. This is not a good point to impress upon a customer who is sure he or she is being charged for too much water. Instead check the meter readings for the last month. It may be that an error has been made in reading the meter which can be corrected by promising a credit on the next month's bill and re-reading the meter to make sure the books are straight.

If this does not correct the situation go out to see the customer and take a 5 gallon bucket and a new meter with you. When you get there have the customer turn off all water using appliances in his or her home and then read the meter. Fill the bucket up twice and then re-read the meter. If the meter

reads 10 gallons it is indeed accurate. If the reading is less than 10 gallons the meter is worn and should be replaced. At this point the customer may wish he had not called.

If the meter reading is over 10 gallons then there is a substantial leak in the customer's plumbing. This can be confirmed by re-checking the reading as the customer watches and then explain the situation to them. By the time this is done, enough water should have leaked out to make the meter reading change, which identifies the problem as a leak and not the meter.

Meters should be maintained and tested to insure that they are accurate. A meter that has worn out will under register and rob the system of revenues. Meters should be tested every 5-10 years, or anytime a customer has a complaint regarding the meter. Residential meters should have an accuracy of between 98.5 – 101.5% or 100% +/- 1.5%. Larger meters can have a wider accuracy range, but normally not more than +/- 4%.

POSITIVE DISPLACEMENT METERS

The positive displacement meter is the most common meter used in a water system. It is the meter used for residences and commercial services up to 2 inches. The most common types of positive displacement meter are the nutating disk and oscillating piston meters. Small multi-jet or turbine meters can also be used in these applications.

The positive displacement meter contains a measuring chamber with a fitted disc or piston. Each time the chamber fills and empties, a predetermined amount of water is displaced as the disc or piston makes one rotation. The action of the nutating disc or the piston is transferred to the meter head by the use of gears or magnetic drives.

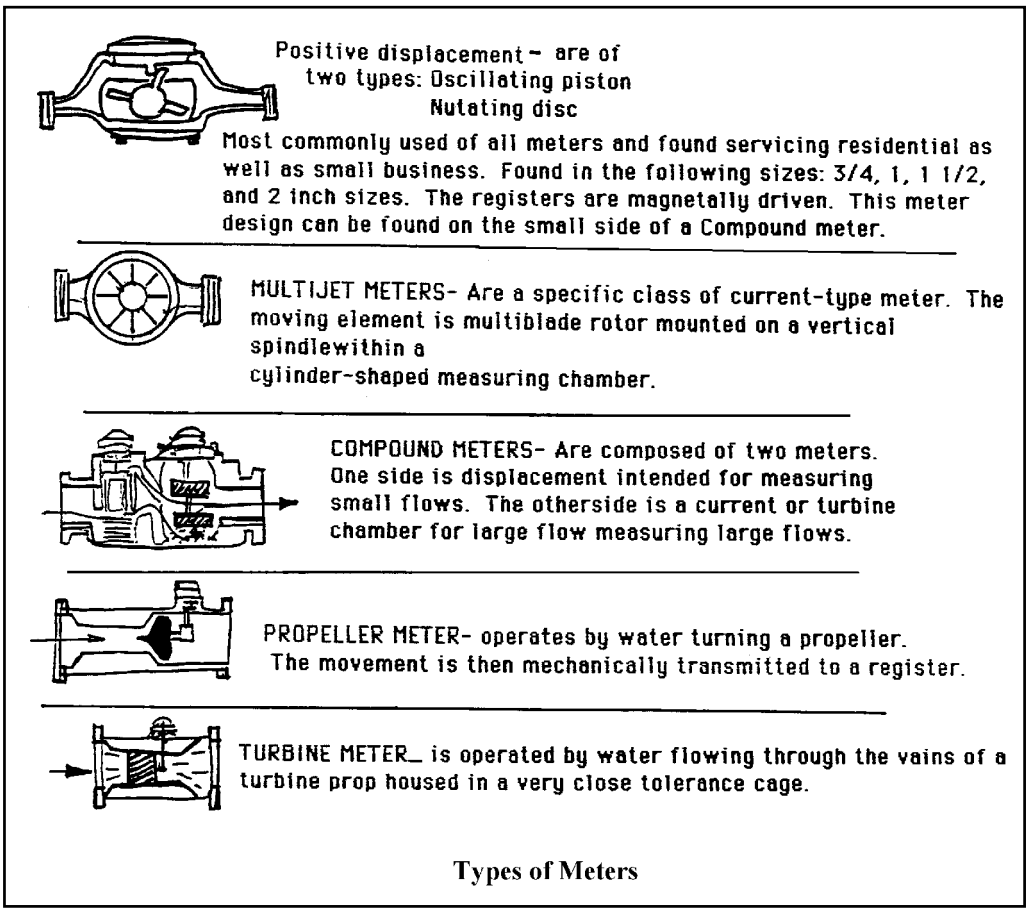

Types of Meters

TURBINE /CURRENT METERS

This meter is designed so that water flowing through the meter chamber spins a close tolerance turbine or rotor. Propeller meters are used in large low pressure transmission lines. As the velocity of the water increases the speed of the rotor/propeller/turbine increases. The motion is transferred through a shaft to the meter register. In the past turbine meters were used only for high flows and were considered to be inaccurate at low flows. Small rotor-type meters are called multi-jet meters. These meters have been improved over recent years and are now available in sizes 5/8 inch and up. These are very dependable meters and have relatively low loss of head

VENTURI METERS

Venturi meters are used to measure high flows such as the intake from rivers or lakes and the discharge from wells. This type of meter usually consists of an upstream reducer, a short throat piece, and a long downstream section to increase the meter back to normal pipe size. The area the water flows through is reduced and the difference in head pressure is measured at the throat of the meter and just before the upstream reducer. Venturi meters are very dependable and with reasonable care will work for many years without adjustment.

READING METERS

A system should get an accurate reading of each meter each month. Most systems have an employee read the meters. Some have the customers reading their own meters. If the customers read their meters, a system representative should check the meters at least twice a year.

Most meters will have a circular register face or a dial face with a totalizer similar to a car odometer. The circular register faces are the more difficult of the two to read. To read this type of meter, start with the scale with the highest number (10,000,000) and then read each of the lower scales until you read the last scale (10.) When the hand is between two numbers record the lower number. If the hand is directly on a number, look at the next scale to see if it is in front of or behind the "0". The reading for the meter dial shown here is 2,697,490 cu.ft.

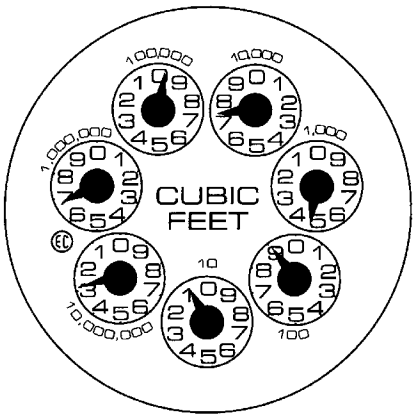

Water Meter Dial

A water loss of less than 10% is considered acceptable and usually will not substantially increase the financial stress on the system. A loss between 10-15% signals that some improvement is needed and spare time should be spent looking for the loss. Between 15-20% indicates that the problem is becoming serious and time should be set aside to search for the cause.

REASONS FOR LOST WATER

- Non-working or inaccurate meters
- Leaks
- Illegal taps
- Storage tank overflowing

REFERENCES:

Sacramento, *Water Distribution System O & M*, 4th Edition, 2000, Chapter 3
Sacramento, *Water Distribution System O & M*, 4th Edition, 2000, Chapter 5

DISTRIBUTION SYSTEM HYDRAULICS

There are a number of issues related the dynamics of moving water through a distribution system. The pressures in the system are determined by how high water is stacked in the air when conditions are static. But when water begins to move through the system hydraulic factors can affect pressures, flow, and forces exterted against the piping.

FRICTION LOSS

When water flows through a pipe a certain amount of energy must be expended to overcome the friction between the water and the surface of the pipe. The determination of the friction loss in a water line is dependent on four factors:

FRICTION LOSS FACTORS

- Pipe length
- Pipe diameter
- Flow through the pipe
- Coefficient of friction -"C" factor

A certain amount of friction loss results from any flow through any size or type of pipe, and this loss must be overcome, usually by increasing the pumping pressure, in order to maintain a given flow through the pipe. As metal lines get older their inner surfaces get rougher and the "C" Factor increases. Friction losses may be reduced by pigging the lines to remove scale or tuberculation caused by chemical stability problems.

WATER HAMMER

When water, that is moving through a water line, is suddenly stopped a pressure surge will be created in the line. This occurrence is known as a "water hammer." The faster the water movement is stopped the greater pressure surge, or water hammer, will be. Water hammer can create a pressure surge up to 120 psi greater than the system pressure. Severe water hammer can cause ruptured lines and even lift water hydrants out of the ground. Once water hammer has been created it will travel down the line at a speed of about 760 mph.

To minimize the effect of water hammer all valves and hydrants in the system must be opened and closed slowly. Hydraulically operated check valves known as pump control valves also help to protect the pump and reduce water hammer. All bends and fittings on water mains should be backed by thrust blocks to protect them.

THRUST AT PIPE BENDS

Wherever a bend, elbow, tee, or dead-end exists in a pipeline having flexible joints, a force is exerted which tends to open the joints nearest the fittings. The magnitude of this force varies with the amount of bend, the diameter of pipe, and the pressure inside the pipe. When determining the resultant thrust for a given pipe it is advisable to use the maximum working pressure anticipated in the pipe plus an allowance for surges or water hammer.

Once the resultant thrust has been determined for a particular bend, it becomes necessary to provide a backing block of such size to resist the thrust. The thrust must ultimately be borne by the side of the pipe trench and the surrounding soil. The purpose of the backing block is to spread the thrust over an area sufficiently large that the undisturbed earth can support it. The supporting strength of most solid clay soils should vary between 1,500 and 4,000 pounds per square foot. Sandy soils may not support 1000 pounds per square foot.

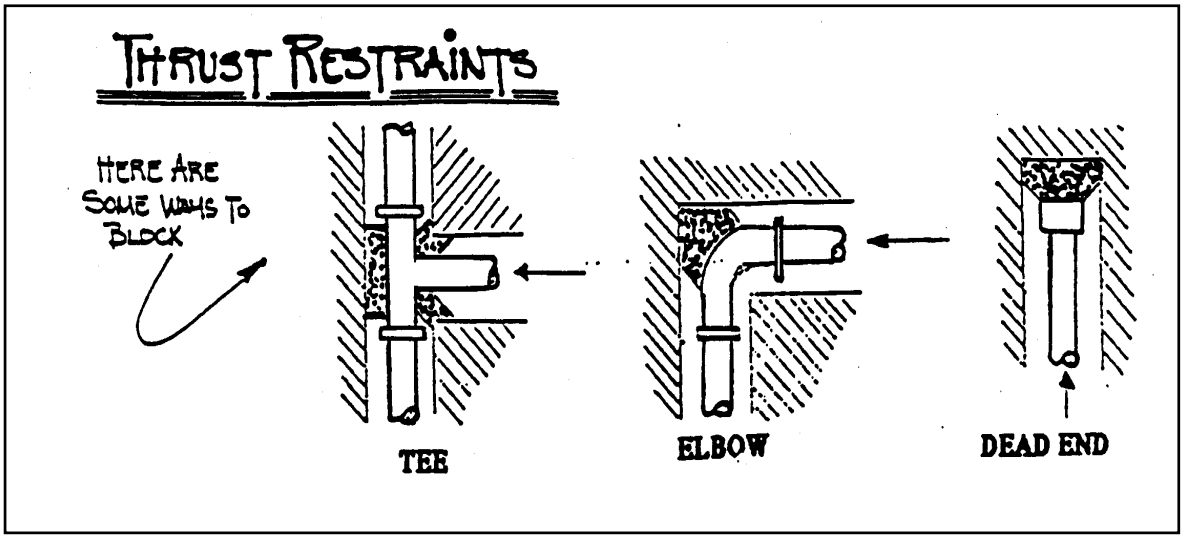

CORROSION CONTROL

Corrosion can be a major cause of damage to a distribution system and the test to determine the stability of the water going to the public may be the most important operational tests a system operator can run.

CORROSIVE WATER/CHEMICAL STABILITY

Water that is corrosive will attack all of the metal components of the distribution system including storage tanks, pipe, valves and meters. It will cause rust and tuberculation in iron pipe and steel storage tanks. Tuberculation can dramatically increase the friction loss and reduce the carrying capacity of a distribution line. Corrosive water can also result in problems from lead and copper that can leach out of the customers plumbing fixtures. Brass is 7-11% lead.

Carbon dioxide (CO_2) dissolved in water will react to form carbonic acid (H_2CO_3) which can cause corrosion. Dissolved oxygen or D.O. in water can also cause corrosion problems, especially if the alkalinity is low. Water can also be corrosive if the proper relationship between the pH and the alkalinity of the water does not exist. The Baylis Curve and the Calcium Carbonate Stability Test (Marble Test) are two of the methods used to determine the chemical stability of water.

BAYLIS CURVE

One method of determining whether the pH and alkalinity are properly adjusted to produce stable, non-corrosive water is with the Baylis Curve. Plotting the pH and alkalinity of the water on this chart will indicate whether the water is corrosive or not. If the point where the pH and alkalinity cross is below the curve (dark gray area) the water is corrosive and will attack metal tanks and pipes in the system. If the point is above the curve the water is not corrosive but does have excessive amounts of alkalinity present, which will cause the formation of lime scale in the lines. This scale formation can restrict the flow of water in the line if allowed to build up over a long period of time and can be as bad for the system as corrosive water. When the point falls within the dotted lines or on the curve itself, the water is stable and will not cause corrosion problems.

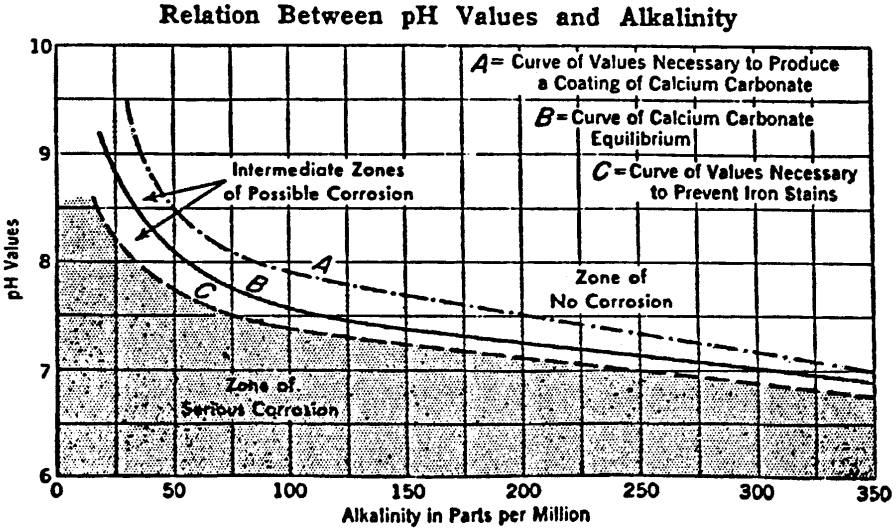

Baylis Curve

GALVANIC CORROSION

Whenever two dissimilar metals come in contact and are submerged in water, an electric current is generated. This type of reaction occurs in most storage batteries. It also occurs in a water system where different kinds of metal components are used, such as meter installations and service connections and couplings.

When these conditions exist, the electric current that is generated will pass from one metal surface to the other. Metal from one side of the connection will be plated onto the other side. This will eventually cause a piping failure as the threads of one side are plated on the other.

ELECTROLYSIS

When D.C. electric current enters a metal pipe, it runs down the pipe and, at some point, discharges into the ground. The passage of this current from the pipe into the ground will cause metal in the pipe to be plated into the surrounding soil. This type of corrosion is known as electrolysis.

Any D.C. current machinery or telemetry equipment that is grounded to water lines will cause electrolysis. However, A.C. current, such as household current, can be grounded to water lines without causing electrolysis since alternating current will not plate the metal into the soil. The use of plastic pipe will eliminate electrolysis problems since plastic is a non-conductor.

CORROSIVE SOIL

Metal pipe that is laid in highly acid soils may also encounter serious corrosion problems from the outside as well as the inside. If cast iron or ductile iron pipe is to be laid in corrosive soil it should be coated with tar or other protective coating to prevent it from being damaged.

CROSS-CONNECTIONS

Any time a potable water supply comes in contact with water of questionable, unknown quality, a serious problem is created. This problem is known as a cross-connection. Cross connections can be created by many situations. A rural customer who connects to a rural system without disconnecting his old well can create a cross-connection. Water-using machinery (such as chemical feeders, air conditioners, washing machines, etc.) all present a possible source of a cross-connection unless the proper measures are taken to insure against it.

BACKFLOW AND BACK SIPHONAGE

Under normal working pressures most cross-connections are only caused when the water from the unknown source is at a higher pressure than the system operates. This would be the case where a customer uses a private well or booster pump. There may be times when the system pressure drops suddenly. This can be caused by a large break in the line or flushing lines or by fire trucks pumping out large amounts of water to fight a fire. This drop in pressure may cause a siphon to be created and can draw water out of chemical tanks, air conditioners, hot water heaters or any appliance with a submerged inlet that is not protected from this back siphonage. Back siphonage, or backflow, can be prevented by the use of an air gap, a vacuum breaker or a reduced pressure zone backflow preventer. Double check valves may only be used for equipment protection, or when the non-potable water presents a low hazard potential.

AIR GAP

An air gap is the simplest means of preventing backflow. The outlet of the potable water source is always kept above the water level of the unknown source. Since there is no physical connection between the two sources there can be no backflow into the potable system. The outlet should be kept a distance of at least two times its own diameter above the non-potable source. All storage tank drains must be separated from sewer lines by an air gap.

VACUUM BREAKERS

A vacuum breaker is used when the outlet of the potable supply is submerged. When water flows in the proper direction the water pressure pushes against a disc that covers a hole in the side of the vacuum breaker. If the pressure in the line drops below atmospheric pressure, creating a vacuum, the air pressure outside pushes the disc back so that air can enter and break the vacuum. Spring loaded vacuum breakers are used when the backflow can happen under pressure. Irrigation systems use pressure vacuum breakers. Vacuum breakers and reduced pressure zone backflow preventers should be installed at an accessible location above ground.

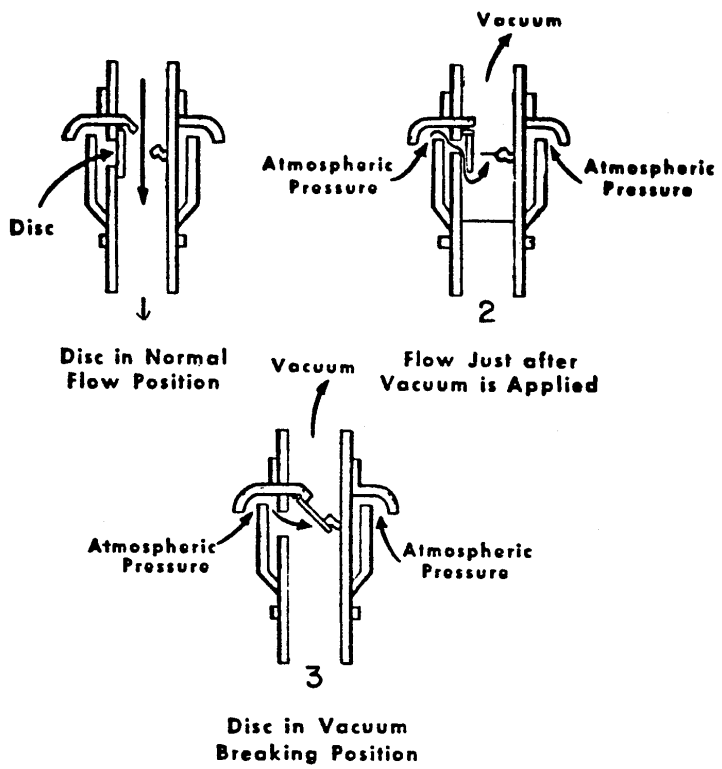

Vacuum Breaker Operation

REDUCED PRESSURE ZONE BACKFLOW PREVENTER

When pressurized water can come from either direction a vacuum breaker may not provide adequate protection. in this situation, a reduced pressure zone backflow preventer can be used to protect the system from a cross-connection. As the water moves in the normal direction of flow the spring loaded check valves (l & 2) open to the flow. When the direction of flow is reversed the spring snaps valves 1 and 2 shut and valve 3 opens to discharge the atmosphere. This creates an air gap inside the device.

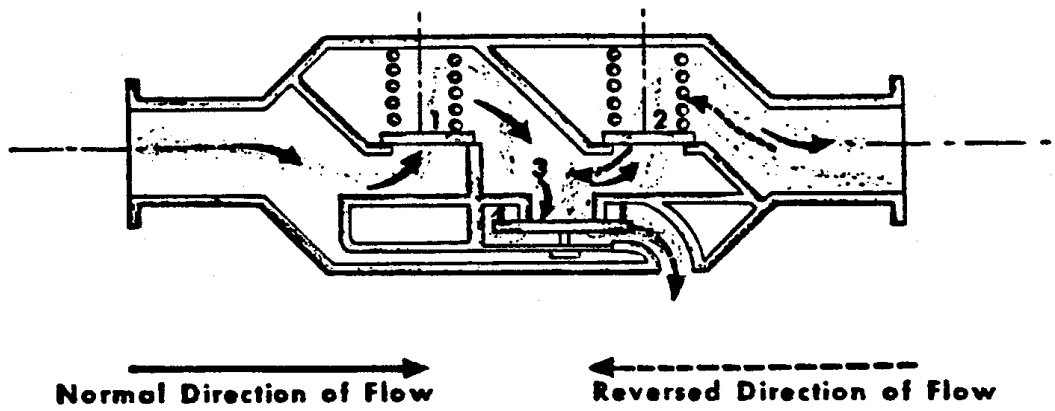

Reduced Pressure Zone Backflow Preventer

These devices must be tested regularly by certified backflow technicians. The installation must be above ground, so that they can drain properly, and should be enclosed in a secured and insulated structure.

REFERENCES:

Sacramento, *Water Distribution System O & M*, 4th Edition, 2000, Chapter 3
Sacramento, *Water Distribution System O & M*, 4th Edition, 2000, Chapter 5
Sacramento, *Water Distribution System O & M*, 4th Edition, 2000, Chapter 8

BASIC STUDY QUESTIONS

1. Which type of pipe is not affected by corrosive water?

2. What is the most common type of residential meter?

3. What type of valve is a corporation stop?

4. What are the two types of fire hydrants?

5. What should be done before you excavate to make a repair?

ADVANCED STUDY QUESTIONS

1. How is a compound meter different from other meters?

2. What is the procedure for disinfecting water lines?

3. Why should you never throttle the flow using the hydrant valve on a dry-barrel hydrant?

4. What are two means of determining the chemical stability of water?

5. What is tuberculation?

BASIC SAMPLE TEST QUESTIONS

1. At what percentage does unaccounted-for water become excessive?

   A. 5%
   B. 10%
   C. 20%
   D. 30%

2. A corporation stop will be located:

   A. Where the service is attached to the main
   B. Between the main and the meter
   C. At the meter yoke
   D. On the customer's side of the meter

3. Which type of valve is best suited for throttling flows?

   A. Gate Valve
   B. Butterfly Valve
   C. Check Valve
   D. Air relief Valve

4. When a meter gets worn it will always over register and record water that wasn't used.

   A. True
   B. False

5. Water hammer is caused by:

   A. Opening a valve too slowly
   B. Closing a valve too quickly
   C. Excessive hardness
   D. High pressure on the suction side of a pump

ADVANCED SAMPLE TEST QUESTIONS

1. The best way to protect the water supply from contamination by cross-connection is:

   A. A double check valve
   B. A vacuum breaker
   C. An air gap
   D. A reduced pressure zone device

2. The positive side of the cathodic protection system is the:

   A. Tank
   B. Cathode
   C. Rectifier
   D. Sacrificial anode

3. A flow meter on a fire line would probably be a:

   A. Venturi meter
   B. Nutating disk meter
   C. Oscillating piston meter
   D. Compound meter

4. When filling a main, the water velocity should never exceed:

   A. 1 ft/sec
   B. 2.5 ft/sec
   C. 10 ft/sec
   D. 20 ft/sec

5. When two storage tanks that serve the same area have different overflow elevations, what type of valve should be included on the lower tank?

   A. Check valve
   B. Altitude valve
   C. Air relief valve
   D. Ball valve

WATER STORAGE

Adequate ground and elevated storage tanks are essential for the proper operation of a water system. These tanks are necessary in order to provide an ample supply of water during peak demands, dependable fire protection with lower insurance rates, adequate water pressure to outlying areas, and lower pumping costs. Elevated storage tanks are said to "float" on the system. This means that they hold large volumes of water high enough in the air to supply the system with water at usable pressures during peak demands. In order to maintain a static pressure of 50 psi, water must be stored 115 feet above the customer.

The type and size of a storage tank to be used depends on the desired operating main pressure and the highest daily peak demand. Ground elevations in the area should be surveyed and the storage tanks located at the highest possible elevation to the area served. Ample storage capacity in a water distribution system will mean lower operating costs and fewer pressure problems for the operator.

GROUND STORAGE TANKS

The purpose of ground storage is to hold enough water in reserve to compensate for fluctuation of the water demand in the system. The most common location of ground storage tanks is near the well field or treatment plant. These storage tanks are usually referred to as clear wells. Clear wells are also used to store additional water, which can be pumped into the system for fire fighting purposes.

CONSTRUCTION OF GROUND STORAGE TANKS

Ground storage tanks are constructed of reinforced concrete, pre-stressed concrete, and steel. Reinforced or pre-stressed concrete is the preferred material since it does not deteriorate in contact with water. Concrete requires little maintenance and can help minimize rust scale in corrosive water. Concrete construction is more expensive than when steel is used. Steel is sometimes used when construction budgets are limited. The initial savings may be sufficient to justify the added expense of maintenance on the steel structure.

DESIGN CAPACITIES OF GROUND STORAGE TANKS

A clear well should provide storage equivalent to at least 4 to 6 hours supply at peak daily flow (2.5 times daily average). This amount will usually permit a uniform pumping rate throughout the day. Clear wells should also contain additional storage for filter backwash water. Plants that operate on a part time basis may require additional clear well capacity to meet these peak flow demands. This storage capacity may range from several thousand gallons in small rural systems to several million gallons in very large ones.

LOCATION OF GROUND STORAGE TANKS

Some ground storage tanks are built above ground while others may be partial or completely underground. Underground storage should be located above the local ground water table. All tanks should be located so that surface and underground drainage is away from the structure. Tanks should never be located within the 100-year flood plain. Sewer lines within 50 feet of the tank must be watertight cast iron.

PROTECTION OF GROUND STORAGE TANKS

Provisions must be made to insure that sunlight, rain, winds, bugs, and people do not enter the tank. This will prevent possible contamination of the supply from outside sources.

- Vents and overflows should be pointed down to exclude sunlight and rainwater. Sunlight will cause algae to grow, which may result in customer complaints.
- Vents and overflows should have a fine mesh screen cover to prevent the entrance of birds and insects. Some gnats lay eggs in water that hatch into "bloodworms". These are harmless, but their presence in water will always bring customer complaints.
- Manholes should be extended above roof levels. They should be fitted with a watertight cover that should be locked except when working in the tank.
- The drain line from a ground storage tank MUST be separated from any connecting storm sewer by an air gap. This must be done to prevent a potential cross-connection.

FIRE PROTECTION

In some cases, elevated storage tanks are located near the center of high value districts in order to provide greater protection from fire loss in these areas. Standards set by the Fire Insurance Commission must be met to receive credit in establishing fire insurance rates. The minimum storage for fire protection should be 60 gallons per capita per 24 hours, or at least 50,000 gallons per day. This quantity of water plus the amount needed to satisfy daily peak demands must be available in storage.

CATHODIC PROTECTION

When two dissimilar metal rods are connected to a voltage meter and submerged in water that contains dissolved salts, a very small voltage reading (less than 0.0001 volts) will occur. This is the way electric storage batteries work. In an elevated storage tank the impurities in the water and the tank itself can cause a voltage to be generated, with the tank giving up metal as the current flows into the surrounding water and to ground.

Cathodic protection systems can be installed to prevent this corrosion by reversing the flow of the electrical current from the water to the tank. The basic theory of cathodic protection is to supply current, from an outside source, through sacrificial anodes suspended in the tank and back into the tank. This electrical current is D.C. and the voltage should be just enough to compensate for the natural voltage set up between the tank and the water. The tank is now the ground and will not become pitted.

The sacrificial anode is usually a piece of iron, magnesium, carbon, or aluminum that is 1-2 inches in diameter and 12 to 18 inches long. The anodes are designed to give up metal to the water instead of the tank. Therefore, they will eventually need replacing. They should be inspected every six months and usually replaced yearly. Installation and maintenance of a cathodic protection system can be hazardous work and should be done by a professional tank and tower company. The success of an installation depends on the proper spacing of the anodes so that all surfaces of the tank receive the flow of current equally. When cathodic systems run at too high a voltage, above 1.2v on a test cell, hydrogen gas can be generated between the tank and any coating material. This can result in blistering and peeling of the coating, which can also cause corrosion

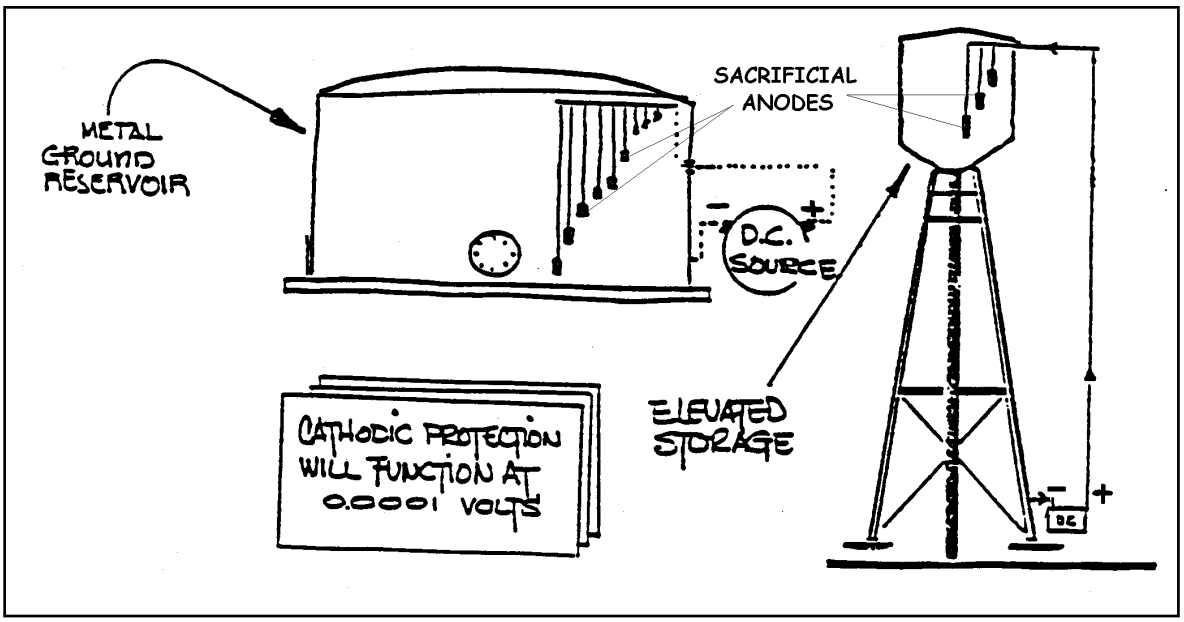

LEVEL INDICATORS

Automatic pump controls are operated by signals from the storage tank that indicate that the water is at the lowest or highest desired level. A signal from the low-level indicator will start the pump. The pump will continue to run until the water fills the tank up to the high level. A signal will then go back to the pump to shut it off. There are three main types of liquid level control systems. They are electrode systems, float systems, and pressure sensing systems.

ELECTRODE SYSTEMS

The use of electrodes is the most common system used today. Pump controls are activated as the water level rises above or drops below these electrodes. As the water level drops below the low-level electrode, the circuit is opened triggering a control signal to start the pump. As the water level rises to contact the high level electrode the circuit is closed triggering a control signal to shut off the pumps. The pump will not restart until the water level drops below the low-level electrode again.

FLOAT SYSTEMS

Float systems are used primarily in ground storage tanks. As the float rises or falls with the water level, high level or low level switches are tripped activating the pump control circuit. This type of level control will have to be checked on a regular basis to prevent malfunctions. Freezing during the winter is always a problem with floats and electrodes due to damage caused as the water level (and the ice) rises and falls. Circulation of water inside the tank may help minimize ice buildup.

PRESSURE SENSING SYSTEMS

Pressure sensing controls are normally located near the bottom of the storage tank. This type of control is activated by the amount of head pressure in the tank. As the pressure increases, a spring or metal band is expanded tripping a microswitch or a mercury switch that then activates the pump. The on and off levels on these switches are set by applying or decreasing the tension on the spring, or by setting manual control points on a dial for the mercury switch. These switches must be protected from freezing and extreme vibrations for proper operation. Pressure transmitters can also be used to control multiple wells or pumps and the signal can be converted into a tank level reading.

HYDROPNEUMATIC STORAGE

Very small water systems may find that elevated storage tanks are too expensive and, in some types of terrain, very difficult to install. They must resort to other means of supplying pressure to the customer. One way to do this would be to run a pump continuously to pressurize a closed system. This is sometimes referred to as a deadhead condition. Without special control valving and bypass piping, this could result in the pump running against shutoff head much of the time and cause the pump to overheat. It also limits consumption to the rated flow of the pump.

Hydropneumatic storage tanks are pressurized by a surcharge of air that forms a bubble in the tank. They can be used to pressurize the system and provide storage. The storage capacity keeps the pump from cycling off and on every time a faucet opens. Pneumatic tanks are also used in large systems as surge protection systems. As the pressure from a water hammer surge enters the tank, the force is exerted against the air pocket. The air pocket is compressed and absorbs the energy to dampen the shock wave.

TYPES OF PNEUMATIC TANKS

Pneumatic storage tanks are available in several designs. They all look the same from the outside. The difference is how the air pocket inside is controlled. The plain steel tank simply has an air bubble in it. There is nothing to separate the air from the water. The advantage of this tank is that air that may be in the water can be separated in the tank. The disadvantage is that air is being continuously dissolved in the water, so the bubble will shrink over time. This means that air must be introduced into the tank periodically. Some wells have a special snifter valve on the discharge line that injects a small amount of air into the line as the pump runs. Since this may put too much air in the tank, a relief valve acts as a level control to keep the proper volume of air in the tank.

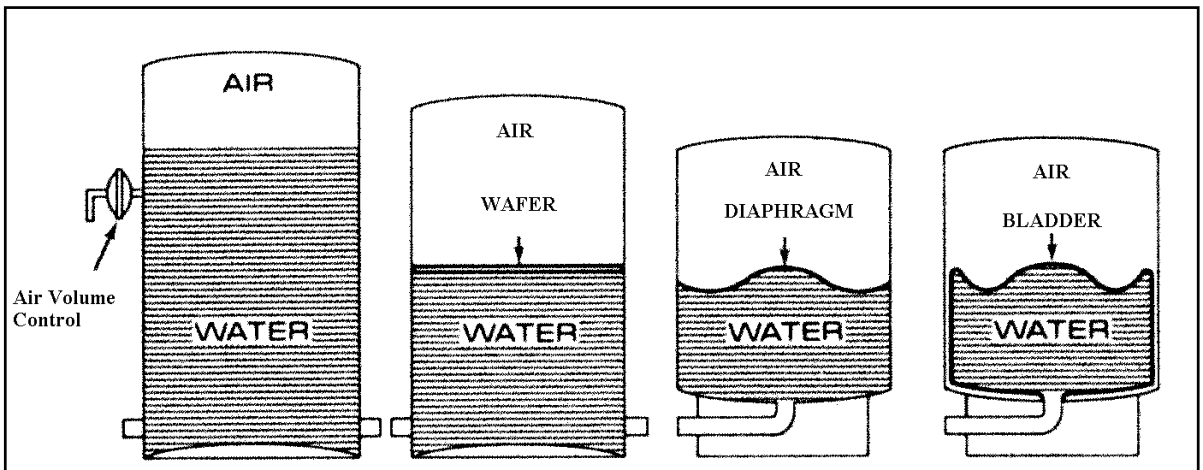

Types of Pneumatic Tanks

The other types of pneumatic tanks have a barrier between the air and water to minimize or eliminate the amount of air lost to absorption. Wafers and diaphragms separate the water from the air, but a bladder design also prevents the water from coming in direct contact with the sides of the tank. This can help prevent corrosion from soft, low alkalinity water. The wafer, diaphragm, and bladder designs require air charging from an external source. Air compressors tied to level switches automatically maintain the proper air volume in large tanks. Smaller tanks should be checked regularly and charged with portable air compressors or air tanks. If the air pocket does disappear, the tank will be full of water and the pump will begins to cycle more often since there will be no drawdown in the tank.

SIZING A PNEUMATIC SYSTEM

The capacity of a pneumatic tank is the drawdown. The drawdown is the difference in water levels from the point where the pump cuts in to the point where it cuts out. The general rule for sizing a pneumatic tank is that the drawdown in the tank should equal at least two minutes of the pump's rated flow. For example, if a well produces 30 gallons per minute, the drawdown should be at least 60 gallons. This means that the pump will always run for at least two minutes each time it cycles on and off. This will greatly reduce the impact that cycling has on the pump.

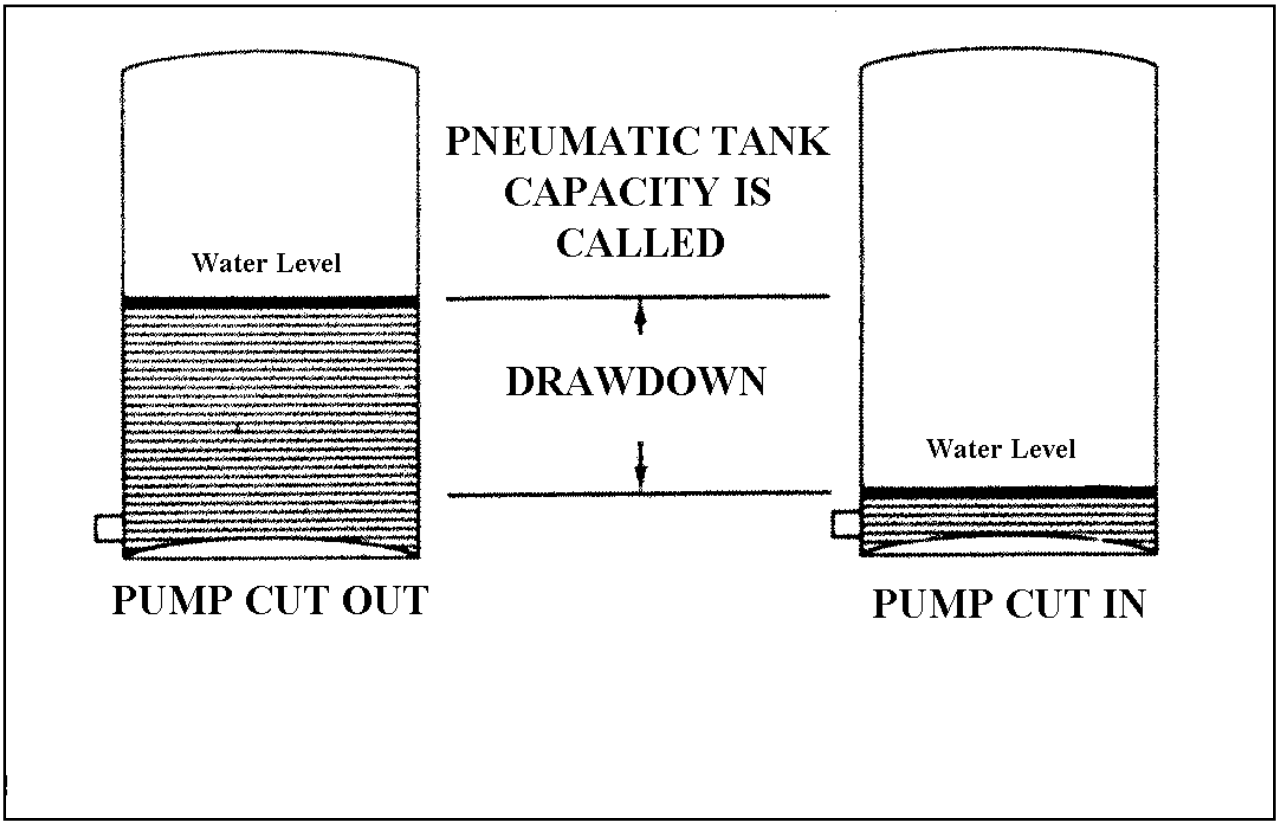

The pump will actually get a start signal from a pressure switch rather than a level indicator. The pressure switch will normally be set to start at 40 psi and stop at 60 psi, although some very small systems may run from 20-40psi. The equipment supplier can calculate what this means in terms of gallons of drawdown for a new tank. For an existing tank, isolate the tank at shutoff pressure and see how much water drains out to drop the pressure to the cut in point.

Elevated storage tanks are located in areas that have pressure problems due to small lines or long runs of piping. Pneumatic tanks can be moved out into the system where pressure problems exist too. It will also increase the amount of in storage for the system. Pneumatically pressurized systems provide no fire protection since there is not enough water available at pressure.

REFERENCES:

Sacramento, *Water Distribution System O & M*, 4th Edition, 1999, Chapter 2
Sacramento, *Small Water System O & M*, 4th Edition, 2001, Chapter 3

BASIC STUDY QUESTIONS

1. Where would you find an air gap on a ground storage tank?

2. What does cathodic protection do?

3. What are sacrificial anodes?

4. What is the drawdown in a pneumatic storage tank?

BASIC SAMPLE TEST QUESTIONS

1. All vents and overflows on a storage tank should be screened.

   A. True
   B. False

2. Pneumatic storage tanks must be full of water to work properly.

   A. True
   B. False

ADVANCED STUDY QUESTIONS

1. Which types of storage tanks are more likely to have corrosion problems?

2. What are three ways to control the water level in a storage tank?

3. Why is ice a problem in the winter?

ADVANCED SAMPLE TEST QUESTIONS

1. What type of electrical current is used in cathodic protection?

   A. AC current
   B. DC current
   C. 3-phase current
   D. Synchronous current

2. What is likely to grow in a storage tank that is not covered?

   A. Sulphur bacteria
   B. Algae
   C. Trout

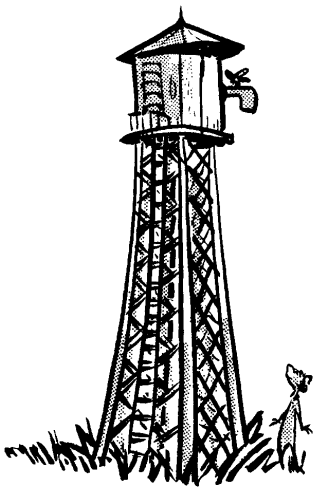

PUMPS AND MOTORS

Pumps provide the means for moving water through the system at usable working pressures. The operation and maintenance of these pumps are some of the most important duties for many water utility operators. There are two basic types of pumps used in water and wastewater systems. The most common type of pump is the centrifugal pump. The other type is the positive displacement pump.

All pumps are rated by the flow they produce and the pressure they must work against. Centrifugal pumps are used for high flow and low head pressure applications. Booster pumps or primary service pumps are required to move high volumes of water and usually operated at low head pressures (200-300 feet of head for water and as little as 50 feet of head for wastewater applications). Centrifugal pumps are ideally suited to these types of applications and are much more efficient than positive displacement pumps of comparable size. Positive displacement pumps are used for low flow and high-pressure applications. High pressure water jet systems like those used for well screen or sewer line cleaning use positive displacement pumps since pressures in excess of 2000 psi are needed and the flows seldom exceed 100 gpm. Sludge pumps and chemical feed pumps are also likely to be positive displacement pumps. Piston pumps, diaphragm pumps, and progressive cavity screw pumps are the most common types of positive displacement pumps.

Another difference between centrifugal and positive displacement pumps has to do with how they react to changes in discharge pressure. When the pressure that a centrifugal pump has to work against changes, the flow from the pump changes. As the pressure increases, the flow from the pump will decrease, and when the pressure drops the flow will increase. Positive displacement pumps do not react this way. The flow does not change when the discharge pressure changes. This is the main reason that positive displacement pumps are used for chemical feeding and sludge pumping. The operator knows that every time the pump strokes, it is pumping the same amount of fluid. This is important if accurate records are to be kept of chemical dosages and pounds of solids that are moving through the system.

TYPE OF PUMP	PRESSURE/FLOW RATING	CHARACTERISTICS
Centrifugal	Low Pressure/High Flow	Flow changes when pressure changes
Positive-Displacement	High Pressure/Low Flow	Flow doesn't change when pressure changes

CENTRIFUGAL PUMPS

A centrifugal pump moves water by the use of centrifugal force. Any time an object moves in a circular motion there is a force exerted against the object in the direction opposite the center of the circle. This would be easier to explain if we use an example consisting of a person with a bucket full of water. If the person swings the bucket in a circle fast enough, the water will stay in the bucket even when it is upside down. The force that holds the water in the bucket is called centrifugal force. If a hole is made in the bottom of the bucket, and it is swung in a circular motion, the

centrifugal force will push the water out of the bucket through the hole. The same principle applies when water is moved through a centrifugal pump.

An impeller spins inside a centrifugal pump. It is the heart of the pump. Water enters the center, or suction eye, of the impeller. As the impeller rotates, the veins pick up the water and sling it out into the pump body under pressure. It is the pressure exerted by the vanes that moves the water out of the pump and into the system. The suction created as the water leaves the impeller draws more water into the impeller through the suction eye.

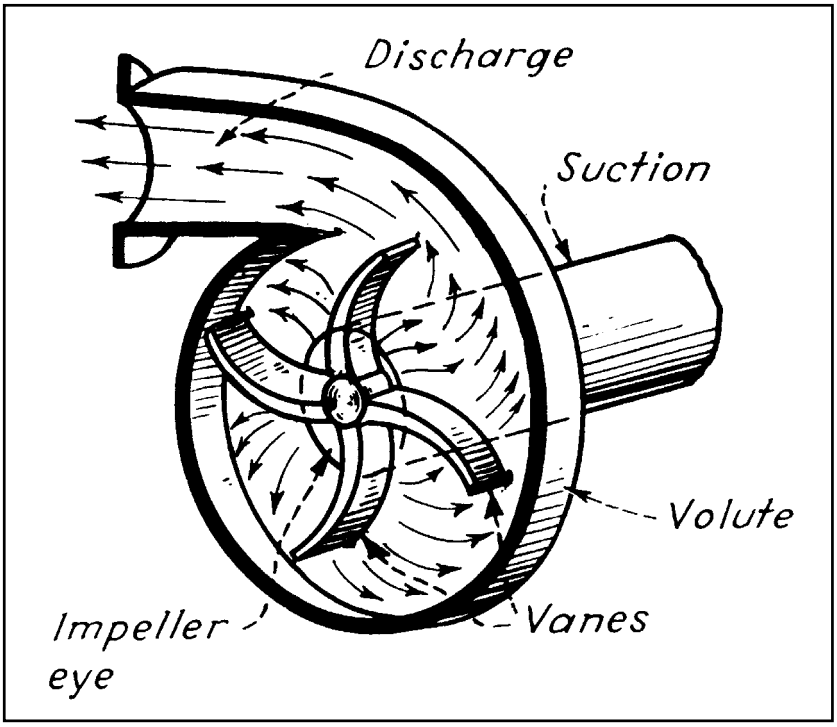

IMPELLER ROTATION AND CENTRIFUGAL FORCE

The number of vanes and the sweep of the veins determine the performance characteristics of the impeller. As vanes are added, the impeller will produce higher discharge pressures and lower flows. The same situation applies to increasing the length or sweep of the vanes. Reducing the number of vanes or the sweep of the vanes will increase the flow and reduce the pressure.

TYPES OF CENTRIFUGAL PUMPS

There are three basic types of centrifugal pumps. Although they differ in design, all three have the same basic components. The first centrifugal pumps were called horizontal split case pumps. The shaft was horizontal and the casing was split in half. With the top half of the casing removed, the entire rotating assembly can be removed for maintenance. The problem with horizontal pumps is the floor space they require.

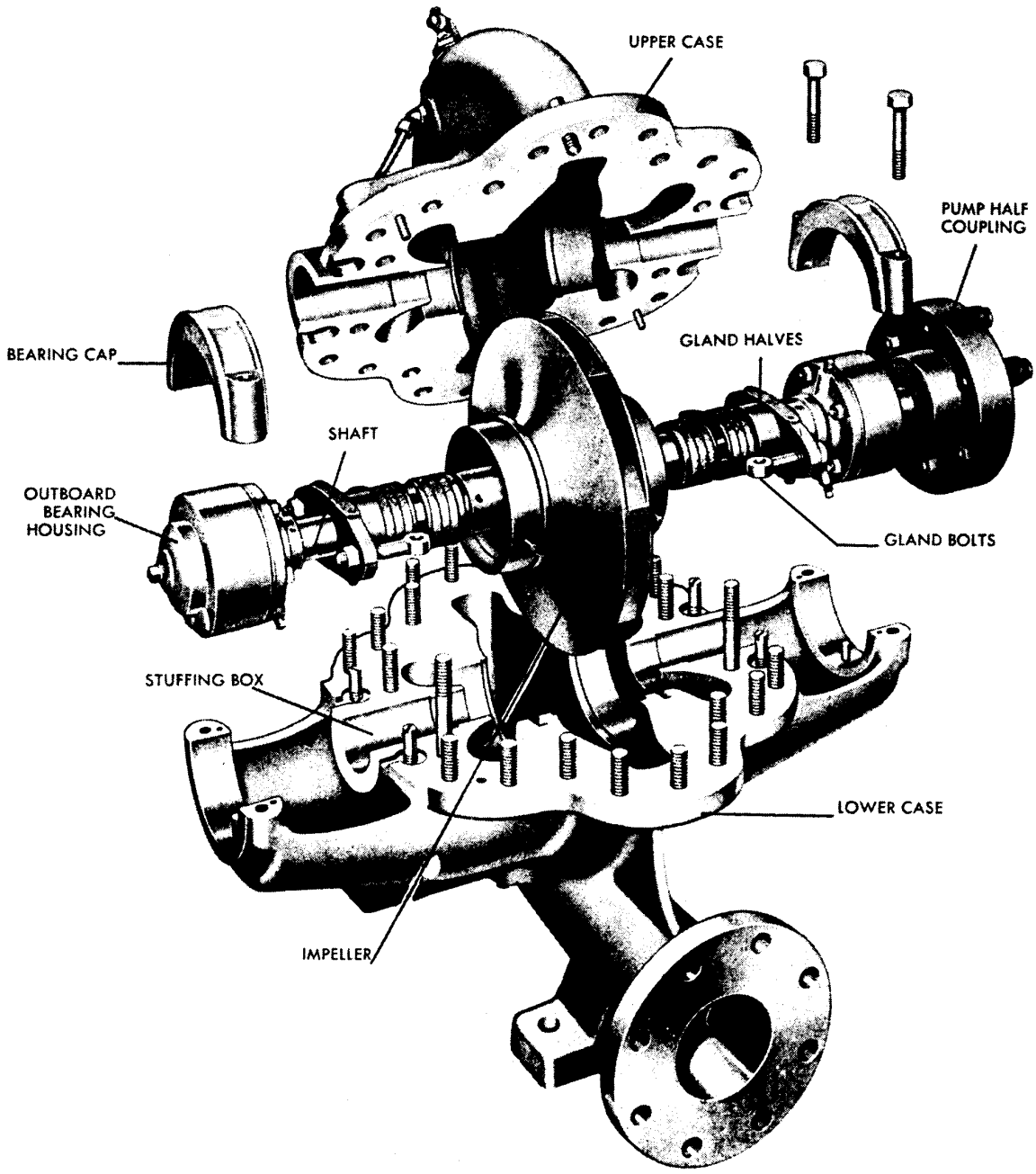

HORIZONTAL SPLIT CASE CENTRIFUGAL PUMP

End suction centrifugal pumps were designed to take up less floor space. The suction piping entered at the end of the pump and discharged at a 90° angle to the suction. This allowed more flexibility in installation and, since the pump could be mounted vertically, more pumps in a given floor space.

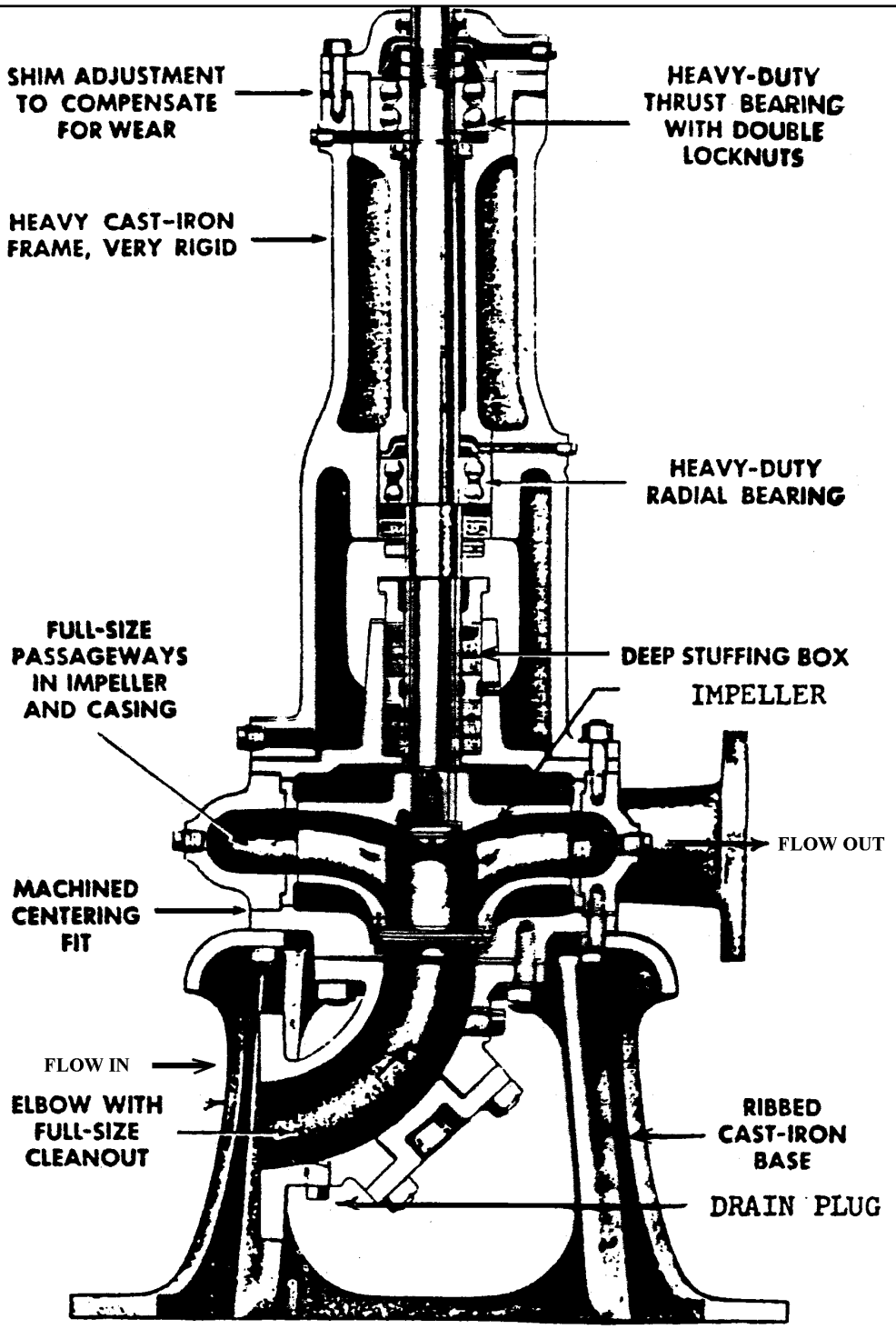

END-SUCTION CENTRIFUGAL PUMP

A vertical turbine centrifugal pump consists of multiple impellers that are staged on a vertical shaft. The impellers are designed to bring water in the bottom and discharge it out the top. This results in axial flow as water is discharged up through the column pipe. Staging the impellers in these pumps can create very high discharge pressures, since the pressure increases as the water moves through each stage.

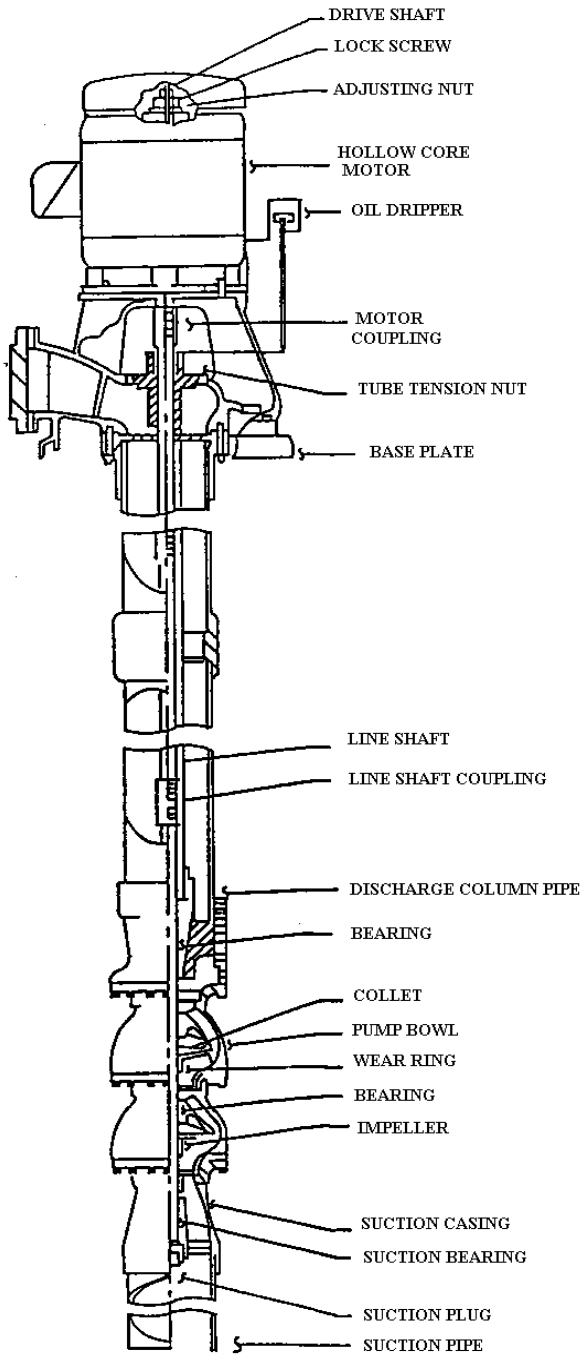

VERTICAL TURBINE CENTRIFUGAL PUMP

CENTRIFUGAL PUMP COMPONENTS

Before we can discuss operations and maintenance of a centrifugal pump, it is important to understand how a pump is put together and what the role is of each of the pump components. A centrifugal pump is constructed from about a dozen major components. Let's take a look at how these pieces fit together to make a pump.

The impeller is attached to the pump shaft. The shaft must be straight and true so that it will not cause vibration when it rotates. The shaft should be protected from potential damage caused by the failure of other pump parts. A shaft sleeve is used to protect the shaft in the area where the shaft passes through the pump casing.

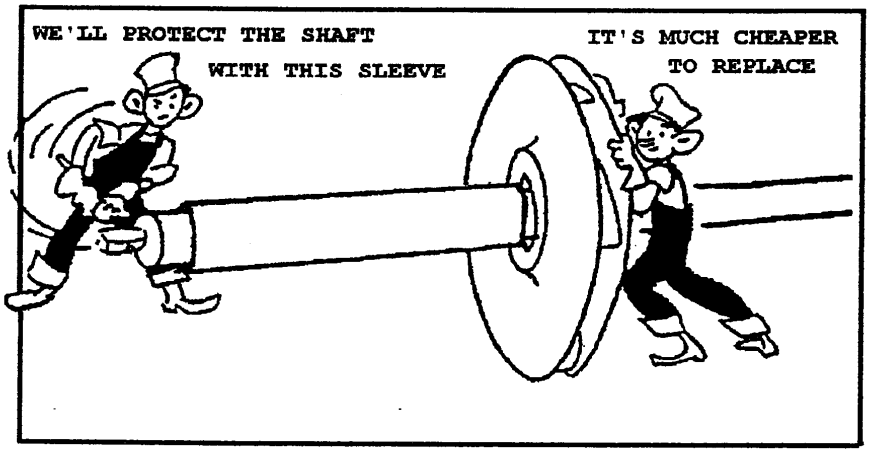

This rotating assembly must be supported as it spins in the pump. Bearings hold the spinning shaft in place. There are two types of anti-friction bearings normally found in centrifugal pumps. One type of bearing is designed to keep the shaft from wobbling from side-to-side as it spins. This side-to-side motion is referred to as radial movement. The bearings used to prevent radial movement of the shaft are called radial bearings. The most common variety of radial bearing is the standard ball-type roller bearing

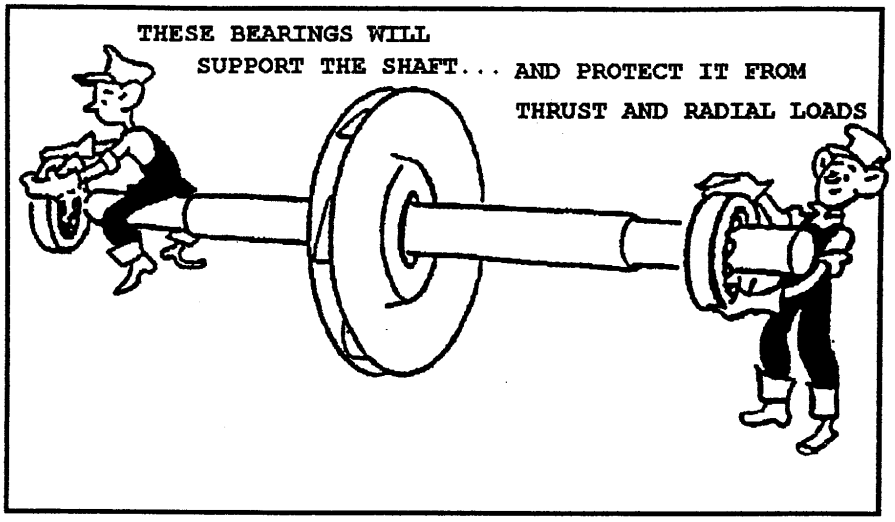

As the impeller spins, water entering the suction eye pushes against the top of the impeller exerting force in the same axis as the pump shaft. This is referred to as upthrust. The pressure developed inside the pump also pushes against the impeller in the opposite direction. This downward force is referred to as downthrust. Bearings designed to support the shaft against this type of force are called thrust bearings. The most common variety of thrust bearing is an angular contact ball bearing.

The rotating assembly is placed in a pump casing. Part of the pump casing is specially designed to collect and direct the flow of water as it enters and leaves the impeller. This part of the pump casing is called the volute.

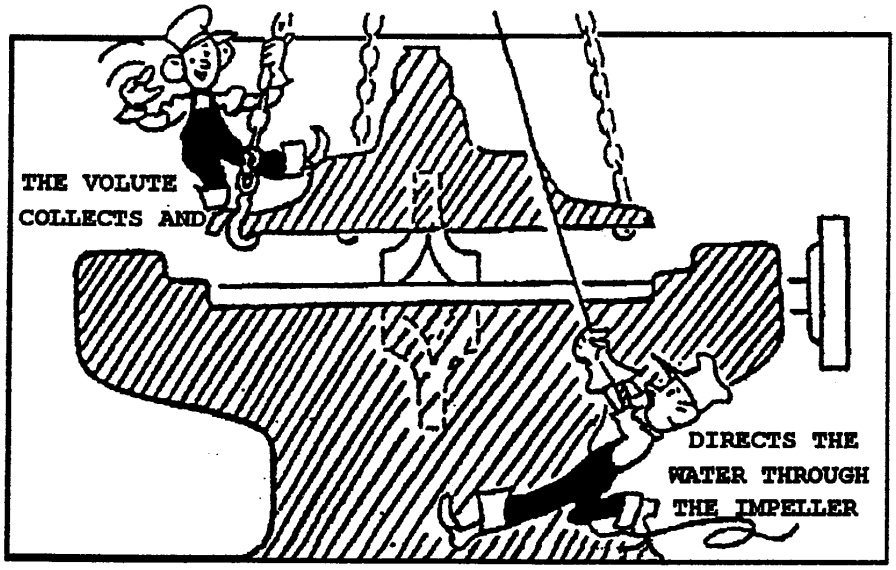

The suction and discharge piping are attached to the pump casing. The suction piping will always be larger than the discharge piping. Suction piping is designed to bring water into the pump at 4 ft/sec in order to minimize the friction loss on the suction side of the pump. The discharge piping is designed to carry water away from the pump at 7 ft/sec.

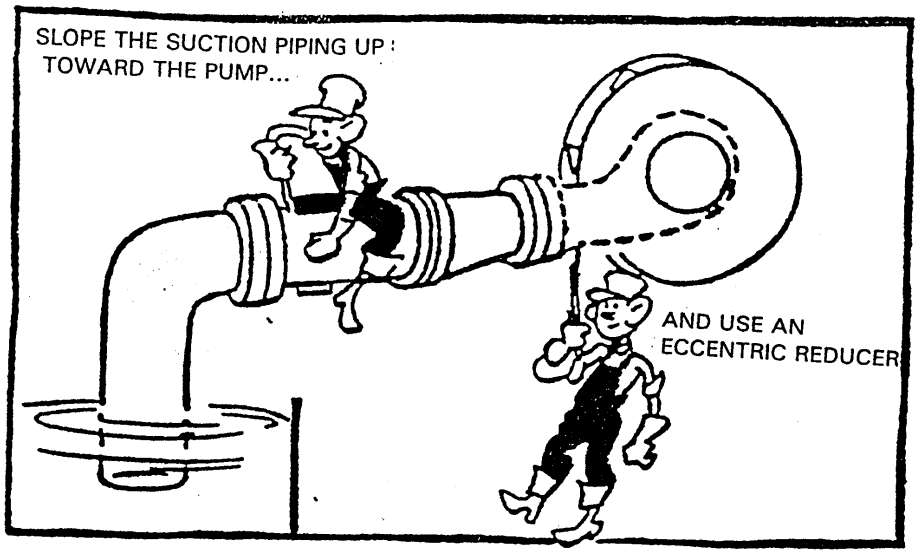

There are several important aspects to suction piping installation. Horizontal runs of piping should slope upward toward the pump. Any reducers on the line should be horizontal across the top instead of tapered. A reducer that is flat on one side is known as an eccentric reducer. A reducer that is tapered on both sides is called a concentric reducer.

These installation features are used to prevent the formation of air pockets in the suction piping. Air trapped in the suction piping can create restriction of flow into the pump. It is also important to make sure there are no leaks in the suction piping that might allow air to be drawn into the pump. The pump must never support the piping. Placing that kind of stress on the casing can cause it to crack or become sprung enough to cause damage to the rotating assembly.

Now that the casing is assembled and the piping is in place, we can spin the impeller and begin moving water. Water will enter from the suction side of the volute and will be slung out of the impeller into the discharge side of the volute. Unfortunately, the water will try to pass from the high-pressure side back to the suction side and recirculate through the impeller again.

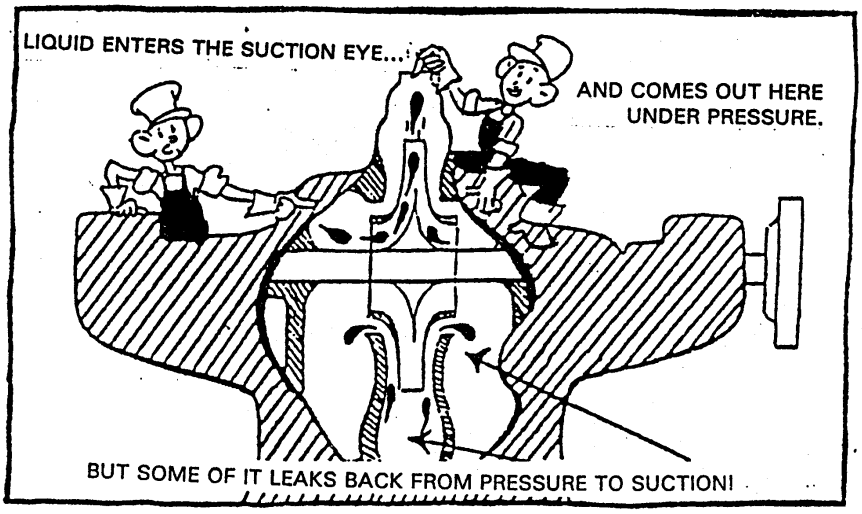

The pump casing could have been machined to close this gap, but the fit would become worn and widened over time. To prevent this internal recirculation, rings are installed between the pump and the impeller that reduce the clearance between them to as little as 0.010". Unlike the casing, these rings are removable and can be replaced when they become worn. Because they wear out and get replaced, they are called wearing rings.

There is another area of the pump that will require some attention. Something must be done to plug the hole where the shaft enters the pump casing. This is a place where water can leak out and air can leak into the pump. Neither of these situations is acceptable. The part of the pump casing that the shaft passes through is called the stuffing box. It's called the stuffing box because we are going to stuff something in the box to keep the water in and the air out.

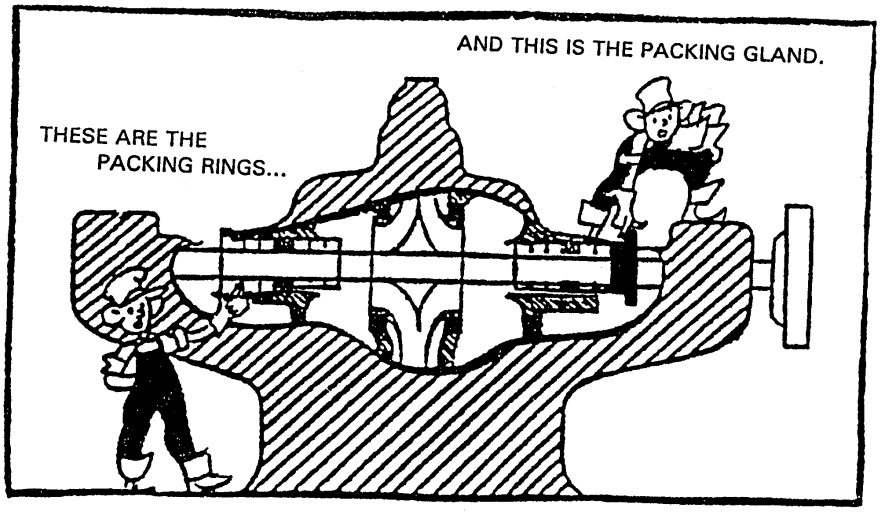

This "stuffing" will usually be rings of pump packing. Several rings of packing are placed in the stuffing box. A metal insert ring fits on top of the stuffing box and is used adjust or tighten the packing down to minimize water leakage. It is called a packing gland.

Since the packing rings touch the shaft sleeve as it rotates, friction and heat are generated in the stuffing box when the pump is running. Water is generally used to cool the packing rings during operation. This means that some water must leak out of the stuffing box when the pump is running. Water may simply be allowed to leak through the packing rings from inside the pump to cool them.

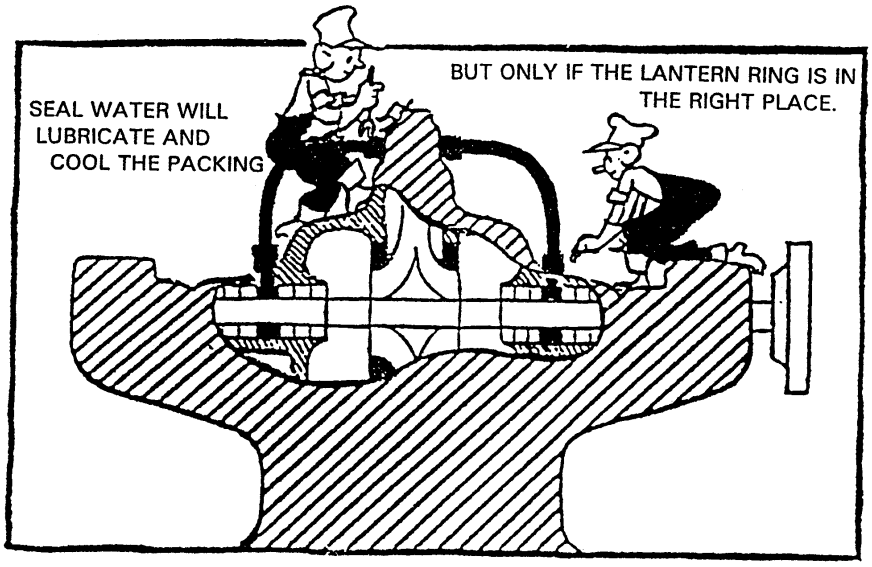

This water may be come from the low-pressure side of the pump and may not be under enough pressure to leak past the packing rings when the packing gland it properly adjusted. If this is the case, high-pressure water from the discharge side of the pump may have to be piped into the stuffing box. Seal water piping is used to supply this water to the packing. The seal water enters the stuffing box from the outside, but it's needed on the inside.

A lantern ring is used to get the water to the inside of the packing rings where the heat is being generated. The lantern ring is a metal ring that has holes in it. Water circulates around the outside of the lantern ring and passes through the holes to get to the inside of the packing rings. The lantern ring must be aligned with the seal water port on the stuffing box to make sure that water will get to the center of the stuffing box. Whenever a potable supply is used for a pump that is pumping non-potable water, an air gap or reduced pressure backflow preventer must be used to prevent a possible cross-connection.

If there isn't enough seal water moving past the packing and rotating pump shaft to cool them properly, the packing will overheat. If the packing is allowed to overheat, the lubricant in the packing will be driven away from the shaft and the packing will become glazed, much like nylon cord that has been burned at the end. The glazed packing will then start cutting into the shaft sleeve, creating more friction and heat. The result will be packing failure and a severely damage shaft sleeve.

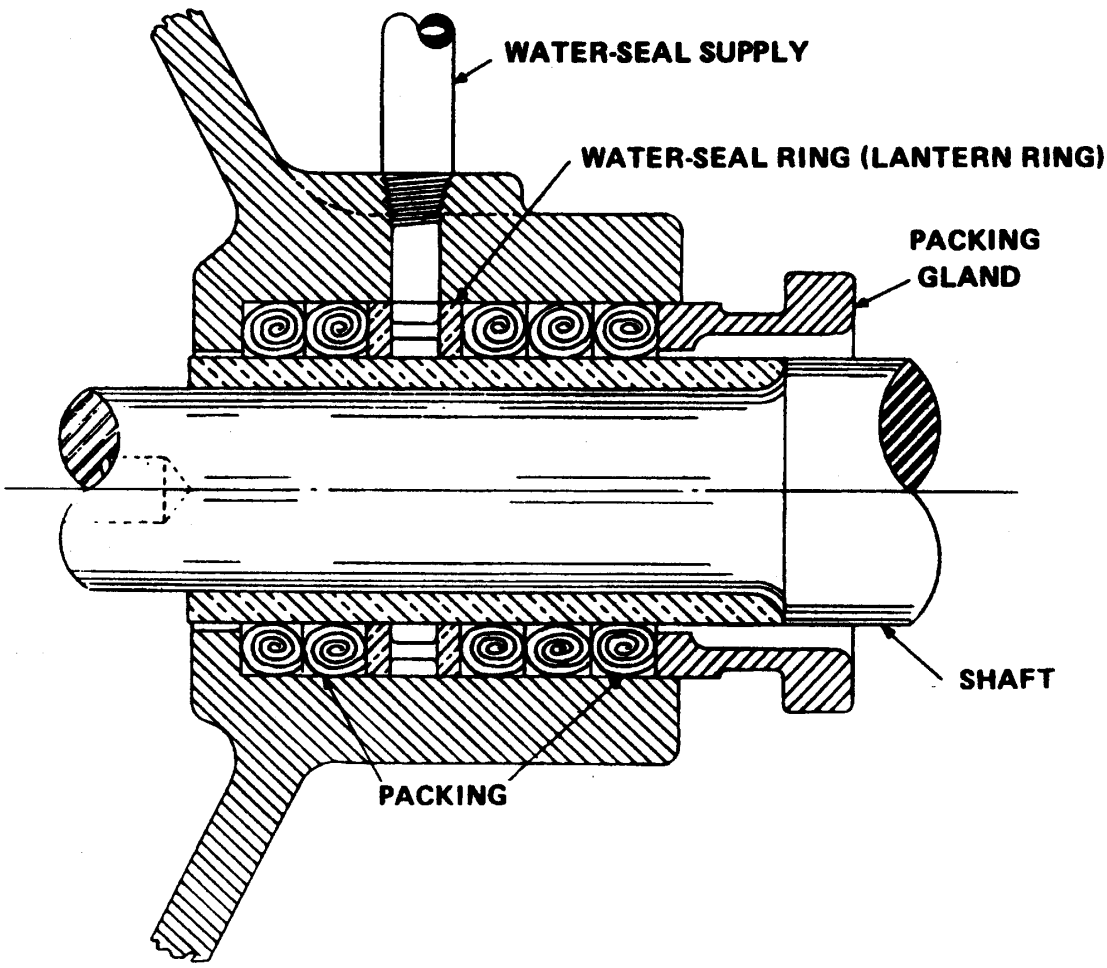

STUFFING BOX WITH LANTERN RING

Pumps that do not have packing in the stuffing box will be equipped with a mechanical seal. Mechanical seals are comprised of two highly polished seal faces. One seal face is inserted in a gland ring that replaces the packing gland on the stuffing box. The other seal face is attached to the rotating shaft. It is held in place with a locking collar and is spring loaded so that there is constant pressure pushing the two seal faces together.

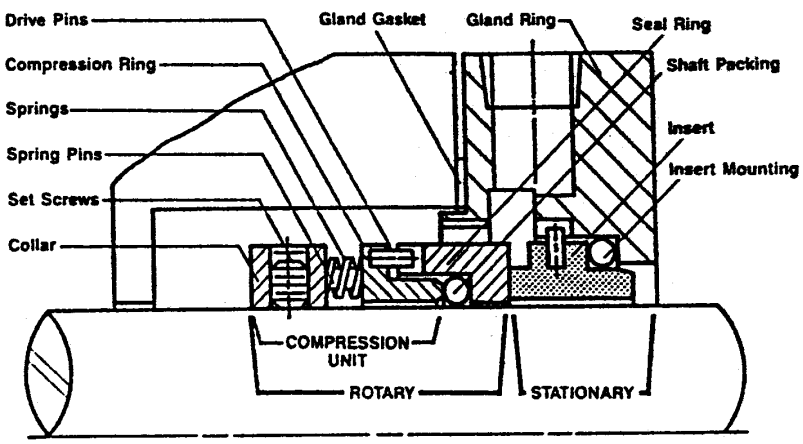

MECHANICAL SEAL COMPONENTS

When the pump runs, seal water is piped into the stuffing box under enough pressure to force the seal faces apart. The seal faces don't touch when the pump is running, but the friction loss created as the water pushes them apart prevents any leakage from the gland plate. Failure of the seal water system will result in the seal faces rubbing against each other. The friction that is generated when this happens can destroy a mechanical seal in a matter of seconds.

REFERENCES:

Sacramento, *Water Treatment Plant Operation*, 3rd Edition, 2000, Vol. 2, Chapter 18

PUMP HYDRAULICS

When a pump is installed, it is important to make sure that it is designed to pump the proper amount of water against the correct head pressure. Pumps that are not properly sized for a specific application will fail to give satisfactory performance. The majority of complaints regarding pump performance usually result from placing a pump in an application that requires it to operate outside its designed flow or pressure ratings.

In order to get the right pump for the job, you must know not only how much water must be moved, but also how much pressure it is going to have to pump against. Determining how much water needs to be pumped is the easy part. A pump dealer may have fifteen different pumps that are rated for 500 gpm. Some of them will pump 500 gpm against 500 feet of head and some will only pump 500 gpm against 50 feet of head pressure. The trick is figuring out how much pressure the pump will have to work against.

The following steps should be taken when sizing a pump:

l. Determine the gpm:

The pump should be able to meet the peak daily demand that will be encountered.

2. Determine the suction head:

The suction head is the vertical distance from the surface of the water supply to the centerline of the pump. If the water supply is below the centerline of the pump, the distance is negative suction head, or suction lift. If the water supply is above the centerline of the pump, it is known as positive suction head. The illustration shows both positive and negative suction heads of 20 feet. Atmospheric pressure and the ability of the pump to pull a vacuum limit negative suction head. At sea level the absolute maximum negative suction head is 33.8 feet. For most pumping applications negative suction heads should never exceed 20 feet.

3. Determine the discharge head:

The discharge head is the vertical distance from the centerline of the pump to the overflow of the storage tank. The illustration shows a discharge head of 60 feet.

4. Determine the total head:

The total head can be determined by **adding** a **negative suction head** to the discharge head or by **subtracting** a **positive suction head** from the discharge head.

5. Determine the friction loss:

The total head represents the vertical distance that the pump must lift the water. The horizontal distance the water must move will also impact the pressure against the pump. As water moves through a pipe, it rubs against the inside of the pipe. This creates friction that will reduce the available pressure at the end of the pipe. A pump must produce a pressure higher than total head to overcome this friction loss and still move the required amount of water. There are four factors to consider when determining friction loss. They are the size of the pipe, the flow through the pipe, the length of the pipe, and the "C factor". The "C factor" is also known as the coefficient of friction. It represents the roughness of the inside of the pipe wall.

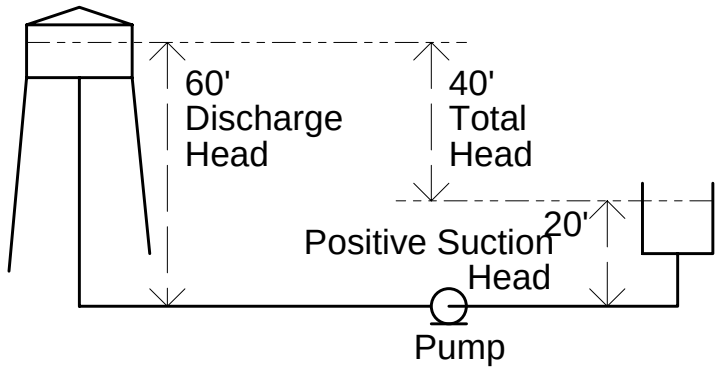

Total Head = Discharge Head - Positive Suction Head

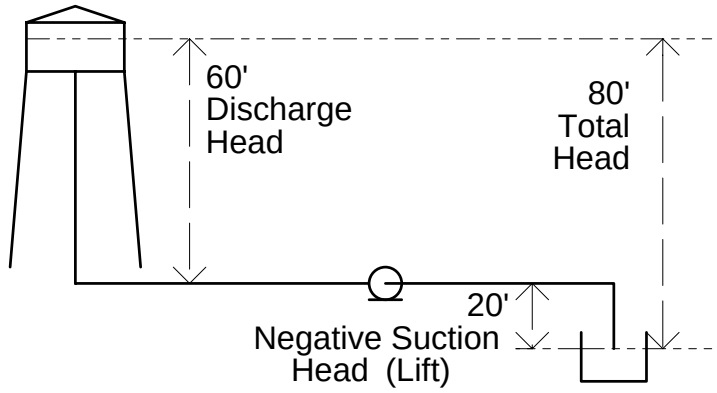

Total Head = Discharge Head + Negative Suction Head

6. Determine the Total Dynamic Head

Once the friction loss has been determined, it is **added** to the total head to calculate the total dynamic head. The total dynamic head (TDH) is the head at which the pump should be rated. The pump can now be sized according to the gpm demand and the total dynamic head that it must work against.

T.D.H. = Discharge Head +/- Suction Head + Friction Loss

PUMP CHARACTERISTIC CURVES

Every pump has certain characteristics under which it will operate efficiently. These conditions can be illustrated with pump characteristic curves. The graph of the pump curve should show:

1) The head capacity curve (A)
2) The brake horsepower curve (B)
3) The efficiency curve (C).

The graph may contain a curve labeled "NPSH" (Net Positive Suction Head) instead of a BHp (Brake Horsepower) curve. NPSH represents the minimum dynamic suction head that is required to keep the pump from cavitating.

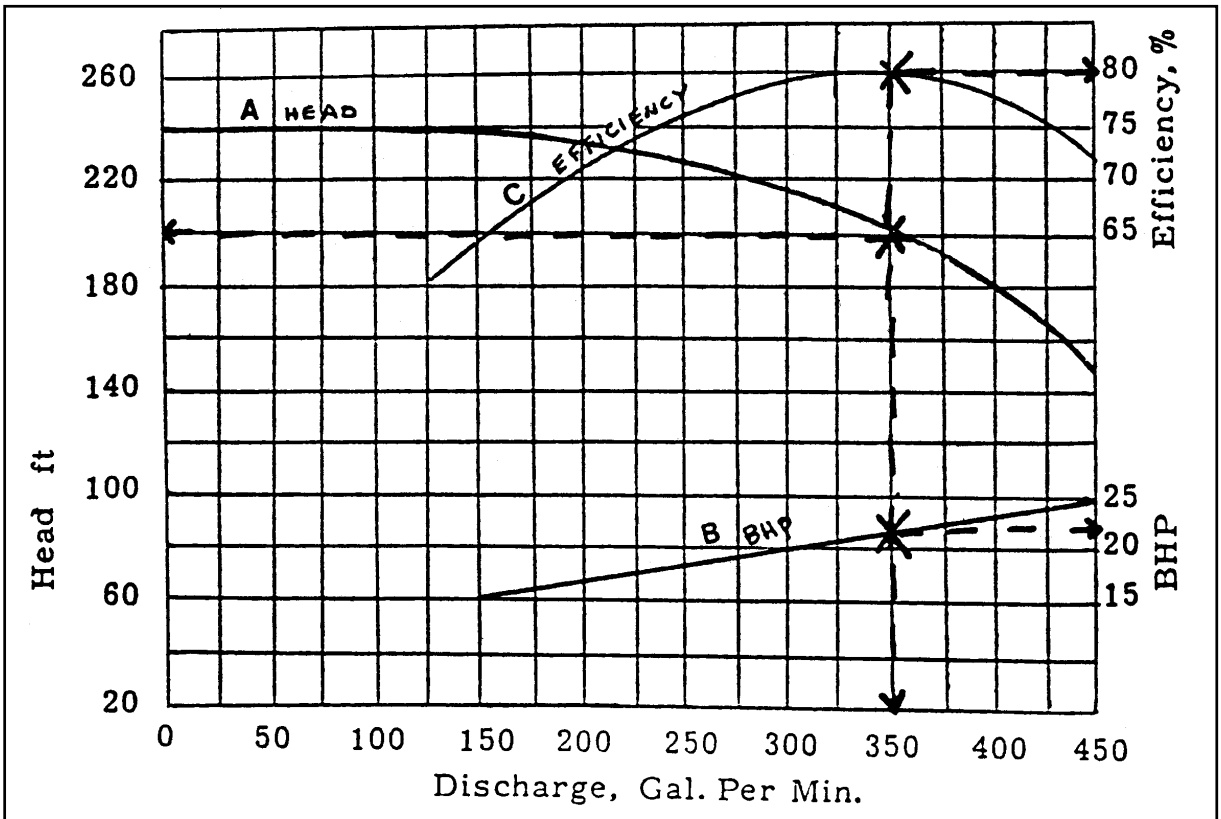

PUMP CURVE

To use the pump curve:

1. Start at the particular head pressure that is desired and then travel across the chart to the point where it crosses the head capacity curve (A).

2. Drop a straight line from this point down to the bottom of the chart to determine the gpm output at that particular head pressure.

3. The brake horsepower can be determined by starting at the point where the vertical line crosses the horsepower curve (B) and going across to the right side of the chart. Use the same procedure for NSPH if it is used instead of BHp.

4. The efficiency of the pump at this flow and pressure is determined by starting at the point where the vertical line crosses the efficiency curve (C) and going over to the right side of the chart.

When the head pressure of the pump represented by this curve is 200 feet, the output is 350 gpm. The brake horsepower under these conditions is about 22 BHp and the efficiency is 80%. If the impeller or the speed of the pump changes, all of the pump's characteristics will also change.

SHUT-OFF HEAD

The highest head pressure that the pump will develop is called the "shut-off head" of the pump. The shut-off head for the pump in this curve is 240 feet of head. When a pump reaches shut-off head, the flow from the pump also drops to 0 gpm. This is a valuable piece of information for conducting a quick check of the pump's performance. If the pump cannot generate its rated shut-off head, the pump curve is no longer of any real value to the operator. A loss of shut-off head is probably caused by an increase in recirculation inside the pump due to worn wear rings or worn impellers.

There is another factor that might affect the shut-off head of the pump. The pump curve assumes that the pump is running at design speed. If a pump that is supposed to spin at 1750 rpm and it is only turning at 1700 rpm, the shut off head will be lower than the pump curve too. However, if the pump speed is checked with a tachometer and found to be correct, the wear rings or impellers are probably in need of repair.

CHECKING SHUT-OFF HEAD

It is fairly easy to check the shut-off head on a pump if it has suction and discharge pressure gauges:

1. Start the pump and close the discharge isolation valve. This will create a shut-off head condition since the flow has been reduced to 0 gpm. The pump should not operate at shut-off head for more than a minute or it will begin to overheat.

   NOTE: NEVER attempt to create shut-off head conditions on a multi-staged turbine well. The shut-off head may be several hundred feet higher than normal operating pressure, which can cause damage to piping.

2. With the pump running at shut-off head, read the suction and discharge pressure gauges. Subtract the suction pressure from the discharge pressure to get the shut-off head. Compare the field readings to the pump curve to see if the wear rings are in need of replacement.

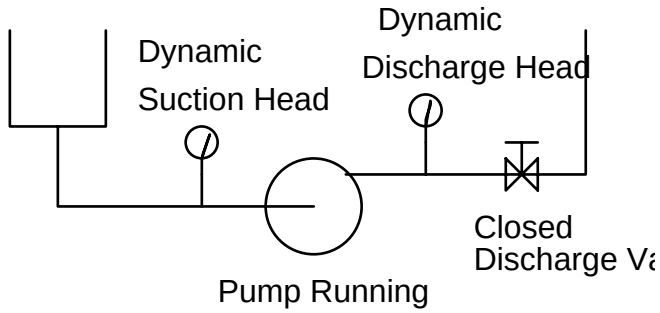

SHUT-OFF HEAD = DYNAMIC DISCHARGE PRESS. - DYNAMIC SUCTION PRESS.

If the shut-off head matches the curve, the same calculation can be used, when the pump is running normally, to estimate the Total Dynamic Head (TDH) and determine the flow when a meter is not

available.

COMMON OPERATIONAL PROBLEMS

The operator should check all pumps and motors every day to insure proper operation. After spending a certain amount of time with these pumps and motors an operator should be able to tell just by listening to them whether they are working properly. The vast majority of pumping problems are either a result of improperly sizing a pump for the job or one of the three following operational problems.

CAVITATION

One of the most serious problems an operator will encounter is cavitation. It can be identified by a noise that sounds like marbles or rocks are being pumped. The pump may also vibrate and shake, to the point that piping is damaged, in some severe cases. Cavitation occurs when the pump starts discharging water at a rate faster than it can be drawn into the pump. This situation is normally caused by the loss of discharge head pressure or an obstruction in the suction line. When this happens, a partial vacuum is created in the impeller causing the flow to become very erratic. These vacuum-created cavities are formed on the backside of the impeller vanes.

As the water surges into the impeller, the partial vacuum is destroyed and the cavities collapse, allowing the water to slam into the impeller vanes. These cavities form and collapse several hundred times a second. As they collapse, they draw the water behind them into the impeller at about 760 mph! The impact created by the water slamming into the impeller is so great that pieces of the impeller may be chipped away.

When cavitation occurs, immediate action must be taken to prevent the impeller, pump and motor bearings, and piping from being damaged. Cavitation can be temporarily corrected by throttling the discharge valve. This action prevents damage to the pump until the cause can be found and corrected. Remember that the discharge gate valve is there to isolate the pump, not control its flow. If it is left in a throttled position the valve face may become worn to the point that it won't seal when the pump must be isolated for maintenance. Butterfly valves can be throttled, but it is still not a good idea to throttle a pump with an isloation valve.

CAUSES OF CAVITATION

- Loss of Discharge Pressure Due to Open Hydrants or Line Breaks
- Closed Suction Valve
- Obstruction in the Suction Line
- Low Suction Head Due to Drop in Water Level

If you suspect that low suction pressure is the problem, check the pump curve to see what the Net Positive Suction Head (NPSH) is for the pump. If there is no NPSH curve, check with the pump supplier.

AIR LOCKING

Air locking is another common problem with pumps. It is caused by air or dissolved gases that become trapped in the volute of the pump. As the gas collects, it becomes compressed and creates an artificial head pressure in the pump volute. As more air collects in the pump, the pressure will continue to build until shut-off head is reached. Air locking is most often caused by leaks in the suction line. The failure of low level cut-off switches, allowing air in from the wet well, may also cause air locking.

An air locked pump will overheat in a matter of minutes. The shut-off head conditions mean that no water is moving through the pump. Vertical pumps that use internal leakage to cool packing may also experience packing ring failure, since the trapped air can prevent water from reaching the packing.

Air relief valves are used to prevent air locking. They are located on the highest point on the pump volute and automatically vent air as it accumulates in the pump. It is also a good idea to repair leaking gaskets and joints on the suction piping. If the pressure in the line drops below atmospheric pressure when the pump is running, air will leak in instead of water leaking out.

LOSS OF PRIME

Loss of prime happens when water drains out of the volute and impeller. The impeller can't create any suction at the impeller eye unless it is filled with fluid. This occurs only when negative suction head conditions exist. Pumps that operate with negative suction lift are usually installed with a foot valve or check valve at the bottom of the suction pipe. This valve holds the water in the suction pipe and pump when the pump is off.

When a pump loses its prime it must be shut down, reprimed, and all the air bled out of the suction line before starting the pump again. Worn packing and a defective foot valve normally cause loss of prime. The best way to prevent loss of prime is to design a pump installation so that there is positive suction head on the pump.

REFERENCES:

Sacramento, *Water Treatment Plant Operation*, 3rd Edition, 2000, Vol. 2, Chapter 18
Sacramento, *Small Water System O&M*, 4th Edition, 2001, Chapter 3
Sacramento, *Water Distribution System O&M*, 3rd Edition, 1996, Chapter 5
Groundwater and Wells, 2nd Edition, 1986, Chapter 17

ELECTRIC MOTORS

Very few operators do electrical repairs or trouble shooting because this is a highly specialized field and unqualified operators can seriously injure themselves or damage costly equipment. For these reasons the operator must be familiar with electricity, know the hazards, and recognize his own limitations when working with electrical equipment. Most water systems use a commercial electrician for major problems. However, the operator should be able to explain how the equipment is supposed to work and what it is doing or not doing when it fails. Electric motors are commonly used to convert electrical energy into mechanical energy. A motor generally consists of a stator, rotor, end bells, and windings. The rotor has an extending shaft, which allows a machine to be coupled to it. Most large motors will be three phase motors rated from 220 or 4160 volts.

Vertical turbine line shaft pumps will often have a hollow core or hollow shaft motor. The rotor is hollow and the motor shaft can slide up and down to allow adjustment of impeller clearance. This lateral adjustment is accomplished by raising and lowering the shaft with the adjusting nut on top of the upper bearing.

PHASES

The term "phase" applies to alternating current (AC) systems and describes how many external winding connections are available from a generator, transformer, or motor for actual load connections. Motors are either single-phase or three-phase.

SINGLE PHASE MOTORS

Single-phase motors are normally operated on 110-220 volt A.C. single-phase systems. A straight single-phase winding has no starting torque so it must incorporate some other means of spinning the shaft. A single-phase motor requires a special start circuit within the motor to make sure it runs in the right direction. Several different types of starter windings are available in these motors. Single-phase power leads will have three wires, like a three-prong extension cord. The third wire is the neutral or ground.

THREE PHASE MOTORS

Three-phase systems refer to the fact that there are three sets of windings in the motor and three legs of power coming in from the distribution system. This type of motor is used where loads become larger than single-phase circuits can handle. With three legs to carry power, more amps can be delivered to the motor. Three phase motors are the most common types used in water and wastewater systems. Three major types of three phase motors are the squirrel cage induction motor, synchronous motors, and wound rotor induction motors.

Squirrel cage induction motors are widely used because of its simple construction and relative low maintenance requirements. The windings are stationary and are built into the frame of the motor. The power supply is connected to the windings in the stator, which creates a rotating magnetic field. The rotor is made up of bars arranged in the shape of a cylinder and joined to form a "squirrel cage." Squirrel cage induction motors make up approximately 90% of all motors used in industry today.

Three-phase motors do not use a start circuit. The direction of rotation is determined by how the three leads are wired to the motor. If any two of the leads are switched, the motor rotation will be reversed.

SINGLE PHASING

Anytime a lead becomes grounded, a dead short develops, or one of the contacts opens in a three-phase motor, single phasing will result. When this occurs, the speed of the motor will drop and it will begin to overheat. The single phase will draw too many amps and it will quickly burn up. When single phasing occurs while the motor is not running, it simply will not start up again. Special circuit protection is available that will shut the motor off if single phasing occurs.

CIRCUIT PROTECTION

Motors need to be protected from power surges and overloads. Fuses and circuit breakers are designed to open the circuit when the current load threatens to damage the motor. Fuses are generally sized at 120-150% of motor capacity. Circuit breakers can be reset when they trip, instead of being replaced like a fuse. Circuit breakers can react faster than fuses and are usually sized closer to the current rating of the motor.

REFERENCES:

Sacramento, *Water Treatment Plant Operation*, 3rd Edition, 2000, Vol. 2, Chapter 18
Sacramento, *Small Water System O&M*, 4th Edition, 2001, Chapter 3
Sacramento, *Water Distribution System O&M*, 3rd Edition, 1996, Chapter 7

BASIC STUDY QUESTIONS

1. What are wear rings?
2. What three factors determine total dynamic head?
3. What happens when you increase the pressure on a centrifugal pump?
4. What are some of the possible causes of cavitation?
5. What does single phasing in a three-phase motor mean?

ADVANCED STUDY QUESTIONS

1. What does the term "C" factor refer to?
2. What is the best way to prevent loss of prime?
3. What are four conditions that could cause cavitation in a centrifugal pump?
4. How do you reverse the rotation of a three-phase motor?
5. What kind of information is found on a pump curve?

BASIC SAMPLE TEST QUESTIONS

1. A lantern ring:

   A. Must be located in line with the seal water port
   B. Is used to direct cooling water to the center of the stuffing box
   C. Will be found in the stuffing box
   D. All of the above
   `

2. The discharge piping of a centrifugal pump will be larger than the suction piping.

   A. True
   B. False

3. Air trapped in the volute of the pump will cause:

A. Cavitation
B. Air locking
C. Loss of prime
D. All of the above

4. Which type of pump would be used in a well?

A. Vertical turbine centrifugal
B. Split case horizontal centrifugal
C. End suction centrifugal
D. Positive displacement

ADVANCED SAMPLE TEST QUESTIONS

1. The maximum pressure a centrifugal pump can generate is called:

A. Shutoff head
B. Total dynamic head
C. Total head

2. Negative suction head should never exceed:

A. 10 feet
B. 20 feet
C. 30 feet
D. 40 feet

3. Which of the following would make a centrifugal pump stop cavitating?

A. Throttle the suction valve
B. Throttle the discharge valve
C. Decrease the TDH
D. Decrease the NPSH

MECHANICAL SYSTEMS O & M

Like any other business, a water system spends a great deal of money on infrastructure and capital improvements. These expenses include piping, storage and all of the mechanical equipment required to produce, treat, and deliver water. A maintenance program is essential to insuring that the mechanical components of the system stay in good working order and provide the longest possible service life. A preventive maintenance schedule should be utilized to make sure that each piece of equipment gets the proper attention. Most preventive maintenance consists of inspecting, cleaning, and lubricating the equipment. The equipment operators can usually complete these tasks. Specially trained personnel that possess the necessary mechanical skills should handle major maintenance, including component replacement and overhaul.

PUMP MAINTENANCE

The most common piece of equipment in a water system is the centrifugal pump. There are several maintenance procedures that must be performed periodically for any centrifugal pump. Pump packing wears out, bearings must be lubricated or replaced, mechanical seals need replacing, couplings must be maintained, and motor and pump shafts must be aligned. These procedures are not difficult to learn. Some of the procedures may require the use of a few special tools. Once an operator understands the basic procedures and has a chance to put the theories into practice, it doesn't take long to become proficient at each task.

PUMP PACKING

Pump packing is one of the biggest problem areas for operators in charge of pump maintenance. Poor maintenance of pump packing is responsible for more pump damage than any other maintenance item. Improperly maintained packing can cause several problems including:

DAMAGE CAUSED BY PACKING FAILURE

- Loss of prime or suction due to an air leak
- Shaft and sleeve damage
- Water contamination of bearings
- Flooding of pump stations

There are many different types of pump packing available for use in today's pumps. The most common type of packing comes in a square braided stock. There are a number of different kinds of braided packing. It can be manufactured from jute, asbestos, nylon, Teflon or other synthetics. It can be lubricated with graphite, grease, or other synthetic lubricants such as Teflon. Prices for packing range from several dollars a pound for graphite-impregnated jute to hundreds of dollars a pound for pure Teflon and other synthetics.

A rule of thumb is to buy the most expensive packing that you can afford, provided that you are taking care of the rest of the pump properly. If scored or damaged shaft sleeves and out of round or bent shafts are not going to be repaired, use the cheapest packing you can get. Expensive packing will not last any longer than the cheap stuff if the sleeve is scored or the shaft is bent. If the rest of the pump is properly cared for, the more expensive types of packing will last several times longer than the cheap packing and will usually pay for itself with a longer life.

REMOVING OLD PACKING

It's time to replace the packing when there is no more adjustment left in the packing gland and there is too much leakage from the stuffing box. When this occurs, all of the packing rings must be replaced. Adding an additional ring or just replacing one or two rings will only lead to premature packing failure and damage to the shaft and sleeve. Use the following procedure to remove the old packing:

1. Tag the pump in the "OFF" position and lock it out so that it can't be accidentally restarted.
2. Isolate the pump by closing the suction and discharge valves.
3. Drain the pump by opening the drain cock or removing the drain plug in the bottom of the volute.
4. Remove the packing gland. If it is not split for removal from the shaft, it should be tied off so that it is out of the way.
5. Remove the packing rings with a packing puller (corkscrew on the end of flexible T-handle) taking care not to score the shaft sleeve.
6. Measure the distance to the lantern ring and then remove it with the packing puller. It may take a puller on each side of the lantern ring to pull it out without getting it cocked sideways. If the lantern ring is split, it can be removed from the shaft. If you're not sure the lantern ring was in the right placed to begin with, measure the distance from the face of the stuffing box to the seal water port or refer to the vendor's engineering drawing of the stuffing box for the correct position.
7. Remove the remaining packing rings and clean the stuffing box and shaft.
8. Disconnect, inspect, and clean the seal water line and seal water port.
9. Inspect the shaft or shaft sleeve. If it is scored or grooved, the pump should be dismantled and the shaft dressed or repaired by a machine shop.

REPACKING THE PUMP

Before new rings are cut, it is important to determine the size and number of packing rings that are needed for the stuffing box. This information should be available in the vendor's engineering drawings. If these drawings are not available, measurements of the stuffing box and shaft can be used to make the determination. The correct packing size is determined using the following procedure:

1. Measure the inside diameter of the stuffing box and the outside diameter of the shaft.
2. Subtract the shaft diameter from the stuffing box diameter.
3. Divide the difference by two. (See illustration no page IX-4)

The correct number of rings can be determined using the following procedure:

1. Measure the depth of the stuffing box.

2. Divide the depth of the stuffing box by the size of the packing to get the total number of rings.

3. Subtract one from this total if a lantern ring is used in the stuffing box.

Once the size and number of rings has been determined, the new packing can be cut and installed. Great care should be taken to keep the packing material clean and free from dirt. Packing spools should be stored in plastic bags to prevent contamination. Dirt and grit in the packing rings will lead to serious shaft and sleeve damage. The two most important aspects of cutting packing rings involves cutting them the right length and cutting them so the ends will butt together squarely. Cutting rings the same length with ends that butt together squarely can be accomplished using the following procedure:

1. Cut the packing to the proper length and shape using a very sharp knife or carton cutter. Wrap the packing material around the shaft, an old sleeve, or even a piece of hardwood turned to the proper diameter. Cut all of the rings at once with the packing on the shaft to insure that the ends will butt together squarely.

2. Wrap each ring of packing around the shaft and seat it in the stuffing box completely before adding the next ring. Open the ring by twisting it instead of pulling the ends apart. A light coat of grease on the outside of the ring will make it much easier to push into the stuffing box. Stagger the joints of the rings so that they are 90 degrees apart. Make sure the lantern ring lines up with the seal water port when it is installed.

3. Install the packing gland. Make sure the gland tightened down evenly. It is usually made out of cast material and will break easily if it gets in a bind.

ADJUSTING THE PACKING GLAND

The final adjustment of the packing gland is made while the pump is running. The pump can be restarted once the locks and tags have been removed, the discharge and suction valves are completely opened, and the pump has been primed. More packing jobs have been ruined by improper gland adjustment than any other single reason. Adjust the packing gland using the following procedure:

1. Tighten the gland one half turn a time on each side until it just begins to put pressure on the packing.

2. Start the pump and tighten the gland until the flow of water is reduced just enough to prevent flooding the drain line. Allow the pump to run for at least five minutes while the packing rings seat. Never allow the packing to get hot during this "breaking in" period. If the packing heats up and lubricant is seen oozing from the gland, the packing is already ruined and should be removed and replaced immediately.

3. After five minutes, adjust the packing slowly until the leakage is reduced to the desired level. The appropriate amount of leakage will vary with the size of the pump and type of packing, but a general rule of thumb is 20-60 drips per minute. Tighten the gland and checking the water temperature periodically. When the water turns lukewarm there is not enough flow to cool the packing properly. Loosen the packing gland just enough to cool the water back down to room temperature. The packing gland will probably need to be checked again, as the packing rings get properly seated. This may have to be done several times over the next 24 hours of run time.

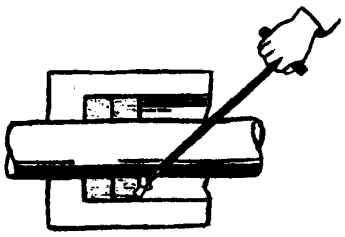

REMOVE OLD PACKING

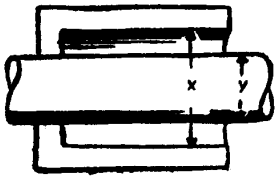

$$\frac{X - Y}{2} = \text{PACKING SIZE}$$

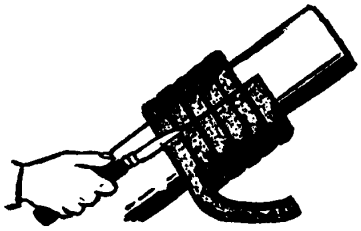

CUT AND FLATTEN PACKING

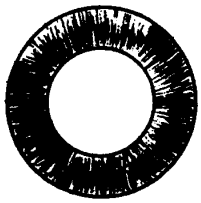

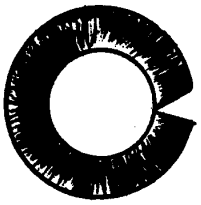

MAKE SURE ENDS ARE SQUARE

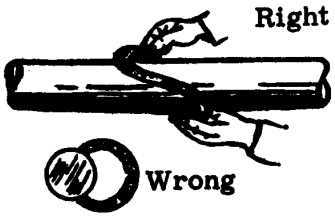

INSTALL NEW PACKING

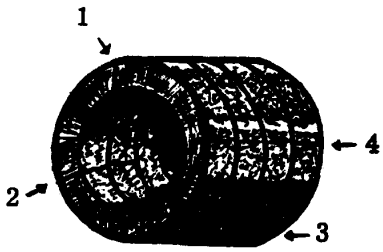

STAGGER PACKING RINGS

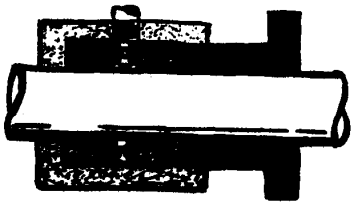

POSITION LANTERN RING PROPERLY

BEARING MAINTENANCE

Proper bearing lubrication is a critical part of getting the designed life out of pump and motor bearings. As strange as it may sound, more bearings have failed from over-lubrication than from lack of lubrication. In fact, some bearings never require lubrication and may fail if they are greased. Shielded and sealed bearings come factory-lubricated and have sufficient lubricant to last the life of the bearing. Shielded bearings have a metal skirt that is attached to the outer race. It covers the rollers but doesn't touch the inner race. Sealed bearings have a rubber skirt that does touch the inner race. Bearings that do require periodic grease lubrication use a surprisingly small amount of grease when compared to the bearing housing size. A properly greased bearing will have a bearing housing that is never more than 25-30% full. The grease is responsible for lubricating <u>and</u> cooling the bearing.

Grease that is inside the bearing will get hot as the bearing heats up. When the grease gets hot it becomes more fluid and is thrown out of the bearing and onto the wall of the bearing housing, where it cools. Grease that is outside the bearing is drawn into the race, where it again heats up and is thrown out. This process keeps the bearing lubricated and removes heat from the bearing. If the bearing housing is full of grease there is no way for the hot grease to get out of the bearing. The lubricant inside the bearing overheats and breaks down. Bearings overheat and fail when this happens.

As bearings heat up and cool down, the races and rollers expand and contract. Bearings are temperature stabilized to about 250^0 F. This means they will assume their original dimensions as long as the temperature does not rise above 250^0F. This is the reason small electric motors should not operate above 105^0C. Lubrication schedules for low-speed (under 2500 rpm) anti-friction bearing applications are based on the operating temperature of the bearing. Always refer to the vendor recommendations for the proper lubricant and lubrication frequency.

COUPLINGS

Couplings connect the motor shaft to the pump shaft. The exception to this would be a close-coupled pump. A close-coupled pump will have the impeller mounted directly to the motor shaft. Couplings can be rubber or steel. Steel couplings are most commonly gear-type or grid couplings.

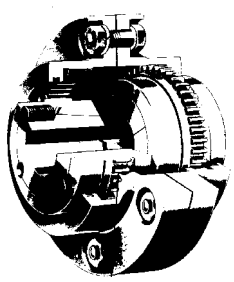

Gear Coupling

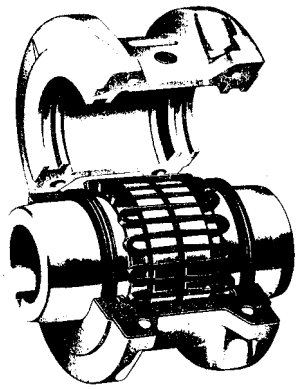

Flexible Grid Coupling

Couplings are mounted and removed by pressing or heating the coupling. They should never be mounted using a hammer. The halves of the coupling should be separated by a gap large enough to accept the thermal expansion as the shaft and motor heat up. Couplings flex as the two shafts spin. This movement generates friction and heat in the coupling and requires grease lubrication. The main problem with lubrication in a coupling is centrifugation. As the coupling spins, it tries to throw the grease out of the housing.

Couplings should be inspected periodically. The housing should be removed and the old grease removed using a solvent. Care must be taken not to get solvent in the bearings or seals. Broken or worn teeth and wear or pits on the grids are indicators that the coupling should be replaced. Gear-type housings are usually cast material. The housing bolts must be tightened carefully in a crossing pattern to avoid cracking the assembly. Vibration occurs in a coupling when it is misaligned.

ALIGNMENT

If the pump and motor shafts are not aligned properly, the result will be vibration and subsequent damage to the pump coupling and mechanical seals, and the pump and motor bearings. Misalignment can be angular or offset (parallel.) Angular misalignment means that the motor is crooked when it lines up with the pump shaft. Offset misalignment means that the shafts are in a straight line but one of them is off center. Misalignment can also be in the horizontal plane, requiring a side-to-side movement of the motor. It can also be in the vertical plane, requiring raising the motor with shims. This means that measurements must be taken at the top, bottom, and both sides of the coupling.

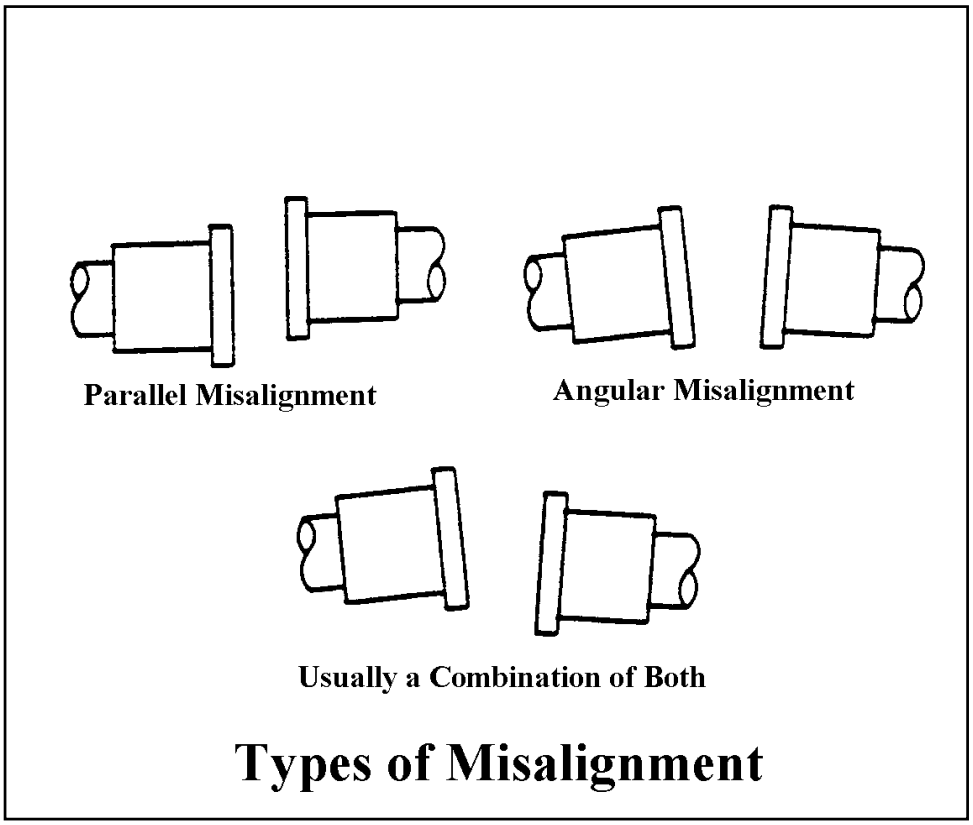

A crude check of the misalignment can be done using a straight edge on the coupling halves. A dial indicator is used to more accurately gauge the amount of offset or angularity. A dial indicator is capable of precise measurements down to 0.001”.

INSTRUMENTATION

Instrumentation in water systems allows the operator to maintain and monitor water levels, flows, pressures, and chemical feed rates at a distance. This use of telemetry gives constant readings of changes in the system and allows operational changes to be made from remote locations. This allows the operator to maintain better control and respond more quickly to changes in the process. The best instruments are those that provide stability, accuracy, and repeatability when monitoring these parameters. Instrumentation equipment can range from simple devices like float switches and pressure gauges to complex systems like on-line chemical analyzers.

Instrumentation is usually set up as either a “feed forward” or a “feedback” loop. An example of a feed forward loop would be a venturi flow meter sending a signal to change a chorine dosage based on a change in well field flow. The meter would be located forward of the chlorine feed point and change the stroke when the flow changed. An example of a feedback loop would be a chlorine analyzer changing the chlorine dosage based on a change in residual downstream of the chlorinator. It would be located downstream and feed the information back to the chlorinator.

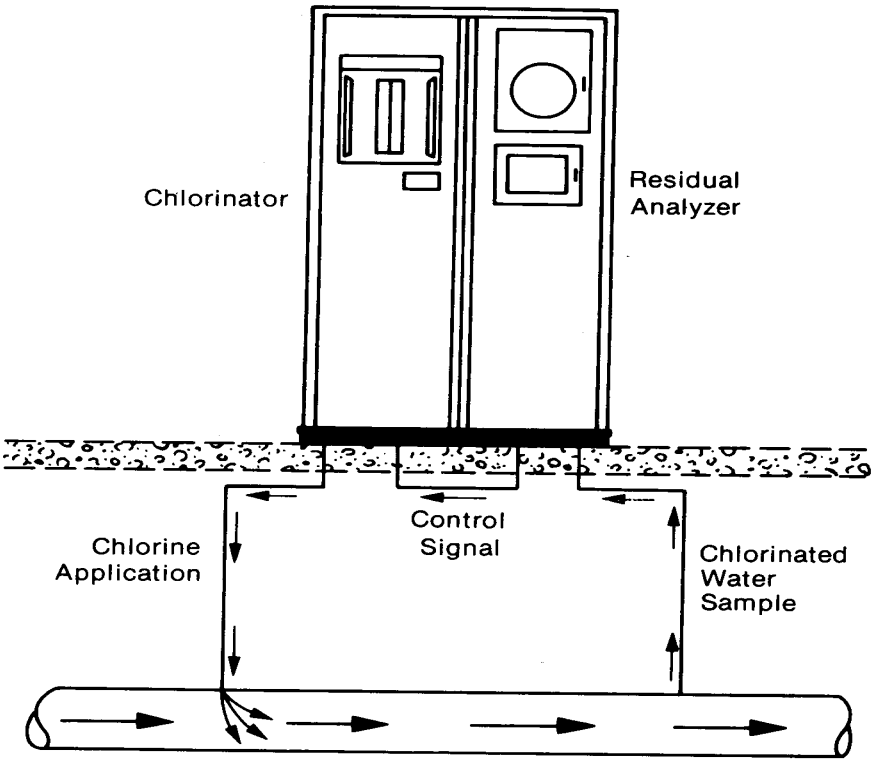

Feedback Control Loop

Three things determine the rate at which an instrument makes a change in the process. One is the amount of change for each reading. This is referred to as the span. Another is how often readings are taken. This is called the rate. The third is the deadband. Deadband means that there is a range around the setpoint where no action is taken. For instance, a chemical feed instrument may be set to maintain a pH of 7.0. But the deadband may be set so that no action is taken until the pH rises to 7.2 or falls below 6.8. If the rate is too fast or the span too large, the control conditions may fluctuate as the instrumentation “hunts” for the setpoint.

CHEMICAL FEED SYSTEMS

Chemical feeders are necessary to assure that the proper amount of each chemical is added to the water on a continuous basis. Each feeder must have a storage bin, a device that feeds the chemical into a solution tank where it is dissolved, and a delivery system to add the chemical at the proper point in the treatment process. Chemical feeders are either gravimetric or volumetric. Gravimetric feeders usually have a conveyor that uses a set of scales to maintain a constant weight of material on the belt. They are not used in water treatment much because most treatment chemicals are corrosive and will damage the scale mechanism. Volumetric feeders are the most common. They include auger feeders and positive displacement metering pumps.

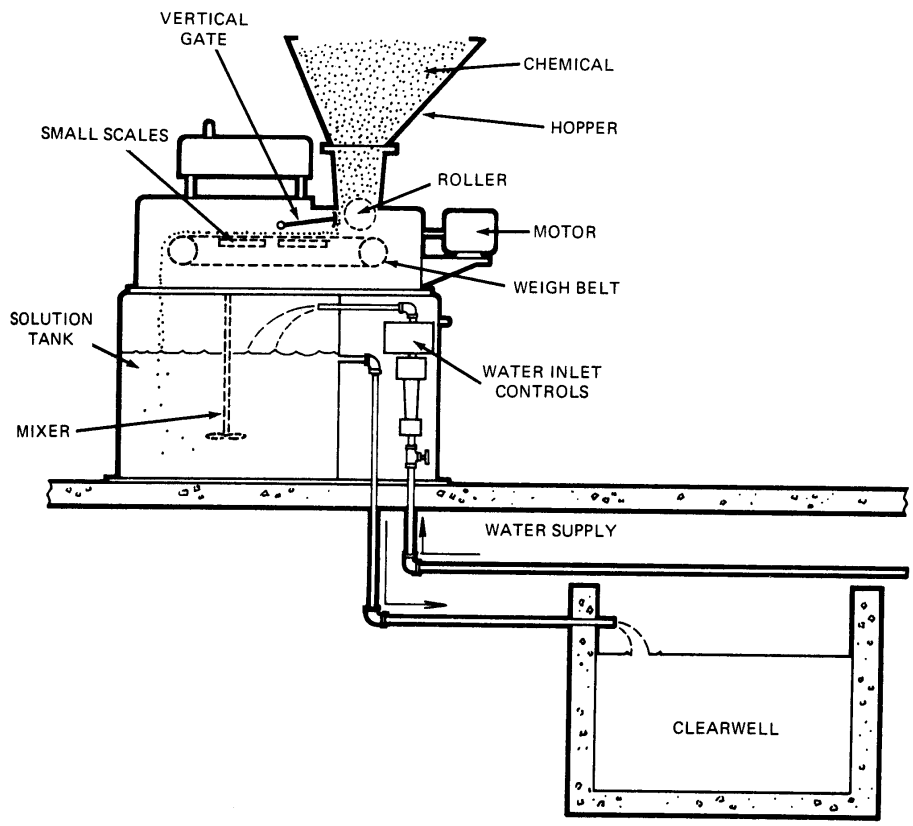

Gravimetric Chemical Feeder

The actual feed device may be a screw auger, a rotating disc, an oscillating shelf, or a variable speed conveyor belt. The feeder control may be calibrated in pounds per day, but usually the scale simply reads from 1 to 10 or 1 to 100. The manufacturer may provide a chart that can be used to determine what the feed rate is at a given setting. If not, the operator can calibrate the machine manually. This should be done periodically to determine if the machine is in need of cleaning or maintenance due to clogging or belt slippage. The first step is collecting and weighing the amount of chemical fed in one minute at several different settings. These figures multiplied by 1,440 minutes per day will give pounds per day feed rate. These points can be plotted to create a straight-line graph that can be used to accurately set the feed rate.

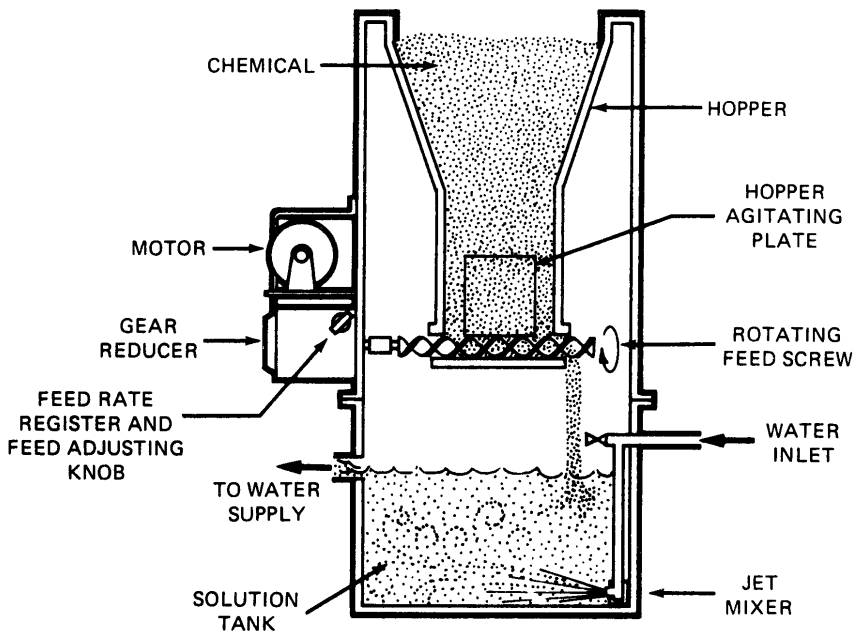

Volumetric Chemical Feeder

Chemical feed pumps are small positive displacement pumps. They are usually diaphragm pumps, but peristaltic pumps are becoming popular for very small systems. Peristaltic pumps consist of a circular pump head that contains a piece of flexible tubing and a roller assembly. As the pump motor turns the roller, fluid is squeezed out of the tube. These pumps can meter flows as low as 3-4 drips per minute (0.1-0.15 ml/min).

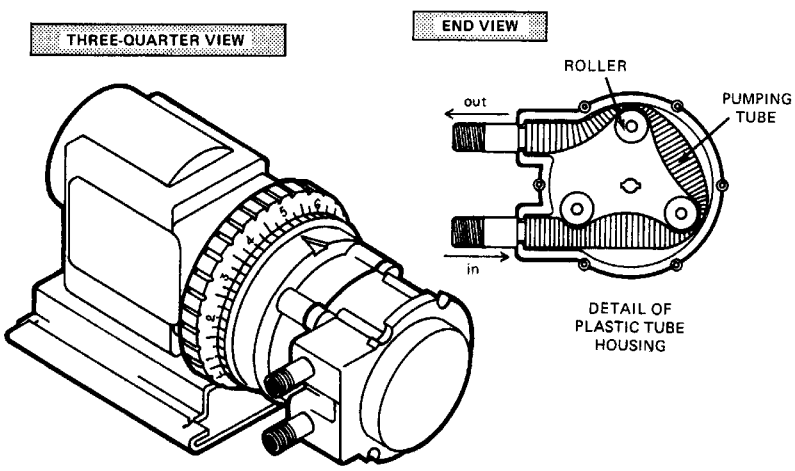

Peristaltic Pump

The diaphragm feed pump consists of a diaphragm driven pump chamber, and two check valves. The check valves, that provide the one-way flow through the pump, can get clogged with lime deposits. The strainer on the pump suction line should be located several inches above the bottom of the solution tank to prevent lime and grit from being drawn into the pump and fouling the check valves.

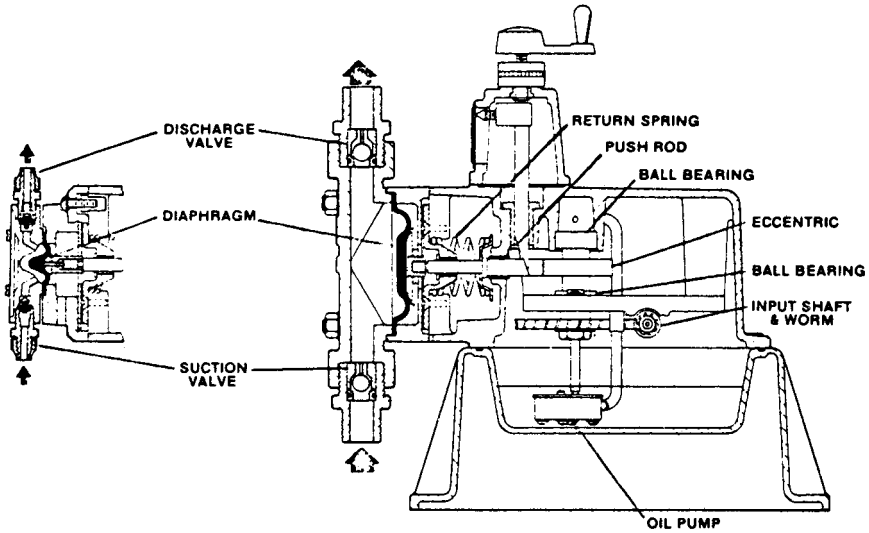

Diaphragm Pump

If the check valves get fouled, the pump will not pump any solution. Flushing the line with clean water or a weak acid, like vinegar, may also correct the problem. In severe cases the valves may have to be disassembled and cleaned. Always make sure the pump is primed before putting it back into service. It may also be advantageous to locate the pump so that it has a positive suction head.

REFERENCES:

Sacramento, *Water Treatment Plant Operation*, 4th Edition, 1999, Volume 2, Chapter 13
Sacramento, *Small Water Systems O & M*, 4th Edition, 2001, Chapter 4

BASIC STUDY QUESTIONS

1. Why is a maintenance program important?

2. What would indicate that it is time to change the pump packing?

3. Why would a bearing that has just been lubricated run too hot?

4. What conditions indicate that a coupling should be replaced?

5. What are the advantages of instrumentation and telemetry?

ADVANCED STUDY QUESTIONS

1. What is an instrumentation feedback loop?

2. What causes an instrument to “hunt” for a setpoint?

3. How many places must readings be taken to check motor alignment?

BASIC SAMPLE TEST QUESTIONS

1. What would a dial indicator be used for?

   A. Measuring temperature
   B. Measuring vibration
   C. Measuring flow
   D. Measuring shaft misalignment

2. Connect a motor to a pump using:

   A. A sleeve clamp
   B. A coupling
   C. Mechanical seals
   D. Bailing wire and bubble gum

3. Which of the following would be a good application for a peristaltic pump?

   A. Booster pump
   B. Well pump
   C. Chemical feed pump
   D. Air compressor

4. Which component in a diaphragm pump causes the most maintenance problems?

   A. Shaft
   B. Check valves
   C. Diaphragm
   D. Pump head

5. A straight edge can be used as an initial check of coupling alignment

   A. True
   B. False

ADVANCED SAMPLE TEST QUESTIONS

1. Misalignment of the pump and motor can cause damage to:

   A. The coupling
   B. The bearings
   C. The mechanical seal
   D. All of the above

2. An important quality of an instrumentation sensor is:

   A. Reliability
   B. Repeatability
   C. Accuracy
   D. All of the above

3. Graduated cylinders can be used to:

   A. Calibrate chemical feed pumps
   B. Store chemicals
   C. Adjust mechanical seals
   D. Prevent surges in the system

GROUNDWATER AND WELLS

HYDROLOGIC CYCLE

Water is being exchanged between the earth and the atmosphere all the time. This exchange is accomplished with energy supplied by the heat of the sun and the pull of gravity. Water that enters the atmosphere from wet ground, lakes, rivers and the ocean is known as evaporation. Plants also release water to the atmosphere. This process is known as transpiration. It is carried in the air as water vapor. When the water vapor cools and condenses, it changes from a gas to a liquid and falls back to earth as precipitation in the form of rain, sleet, snow, or hail. Evaporation from land and ocean puts water back in the atmosphere, and the exchange goes on continually as water goes from earth to atmosphere to earth. For this reason the exchange of water between earth and atmosphere is called the Hydrologic Cycle.

When precipitation falls, part of the water runs off into natural channels, part of it evaporates, and the remainder seeps or infiltrates into the ground. The amount of water that percolates farther into the ground water supply depends on the type of soil it must pass through and how much water is retained in the root zone. Plants retain the water in the root zone and release it back to the atmosphere as transpiration. Percolation is the most common means of recharging ground water supplies.

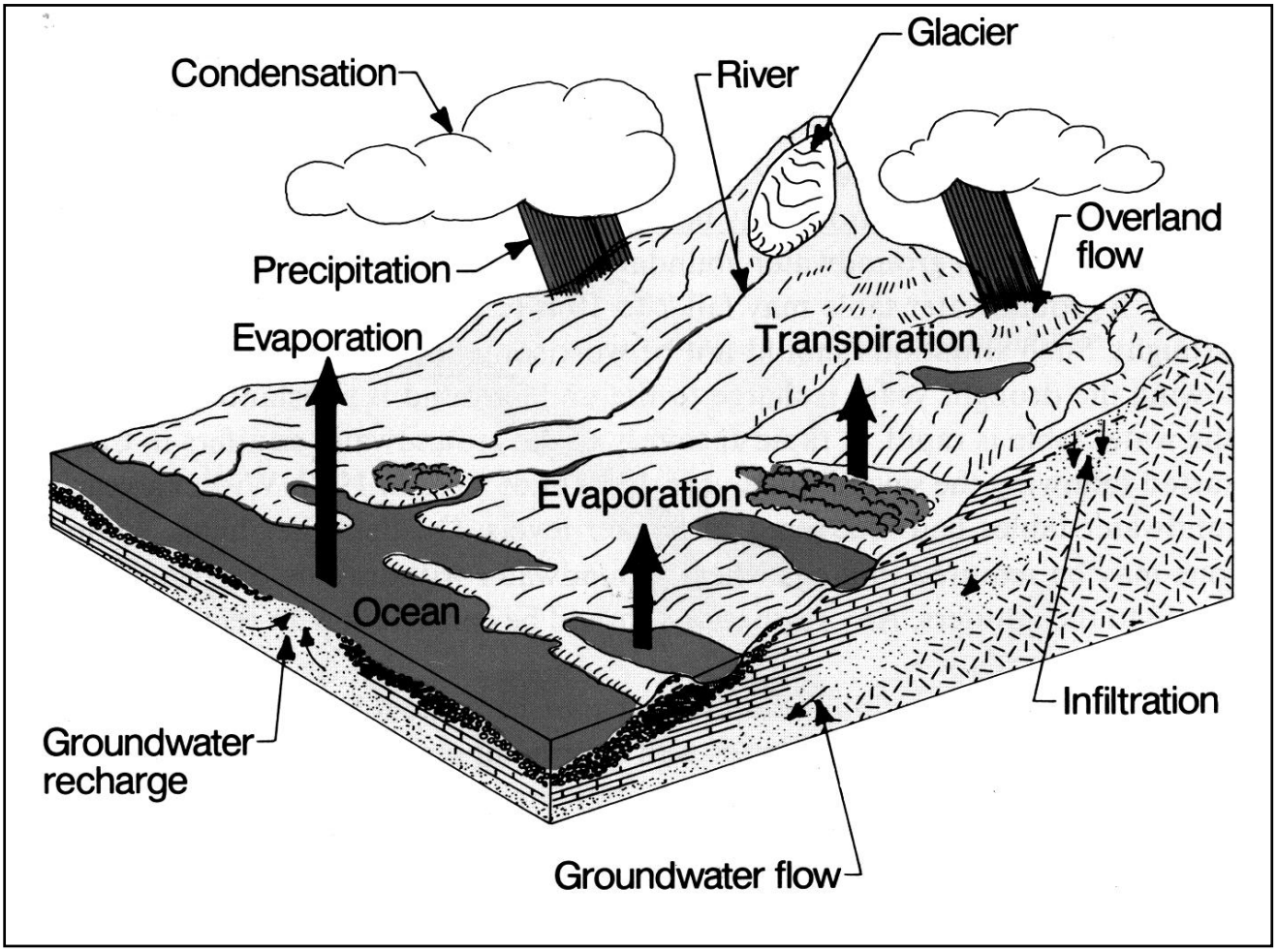

GROUND WATER SUPPLIES

Water will continue to percolate down through the earth until an impervious stratum is reached. An impervious stratum is a layer of material in the earth that will not allow water to pass through it. This material is usually made of rock formation or clay. As the water reaches the impervious stratum it will begin to collect and saturate the surrounding soil, forming an aquifer. It is a common belief that the water quality of an aquifer is constant throughout the aquifer. In fact, the water quality can change dramatically within the confines of a given aquifer. This can be attributed to changes in the medium or mineral deposits in the zone of saturation. Aquifers are generally classified as Water Table (unconfined) and Artesian (confined).

WATER TABLE AQUIFER

An aquifer that is formed from a single impervious stratum and has an upper surface that is free to rise and fall with seasonal changes of recharge rate is known as a water table or unconfined aquifer. This condition allows the free flow of water in the aquifer generally in the same direction as surface water. The water level in a well located in a water table aquifer will not rise above the initial point of encounter. A perched aquifer is a very small, unconfined aquifer that doesn't contain much water and is only recharged by local precipitation.

ARTESIAN WELLS

Artesian wells originate from ground water that is trapped between two impervious strata. As the water flows between these strata it becomes confined and as recharge continues, the water backs up, creating pressurized conditions in the aquifer. Water in a well located in an artesian aquifer will rise above the point at which it is first located. If the water rises to the surface it is a free-flowing artesian well. If not, it is called a non-flowing artesian well.

TYPES OF GROUND WATER FORMATIONS

The saturation zone of an aquifer may be any one of several different materials. Most aquifers occur in formations of sand or gravel. Others may be found in limestone, sandstone, shale, clay, or even silt. The type of formation will influence the water quality and yield of a well.

WATER WELL LOCATION

Several factors are involved in selecting a site for a new well. The most important of these is finding adequate quantities of water that will meet SDWA drinking standards with the minimum amount of treatment. Potential pollution of the water supply is another major concern. Economics related to purchasing easement and connecting to the system, and population or demand within the system will also be factored into the decision. Finally, politics can become an issue in some cases.

Consulting engineers will rely on well logs from other wells in the area, geological data, and test holes to determine where the best chance of finding the appropriate quantity and quality of water exists. But even then, drilling a water well is still a hit or miss proposition.

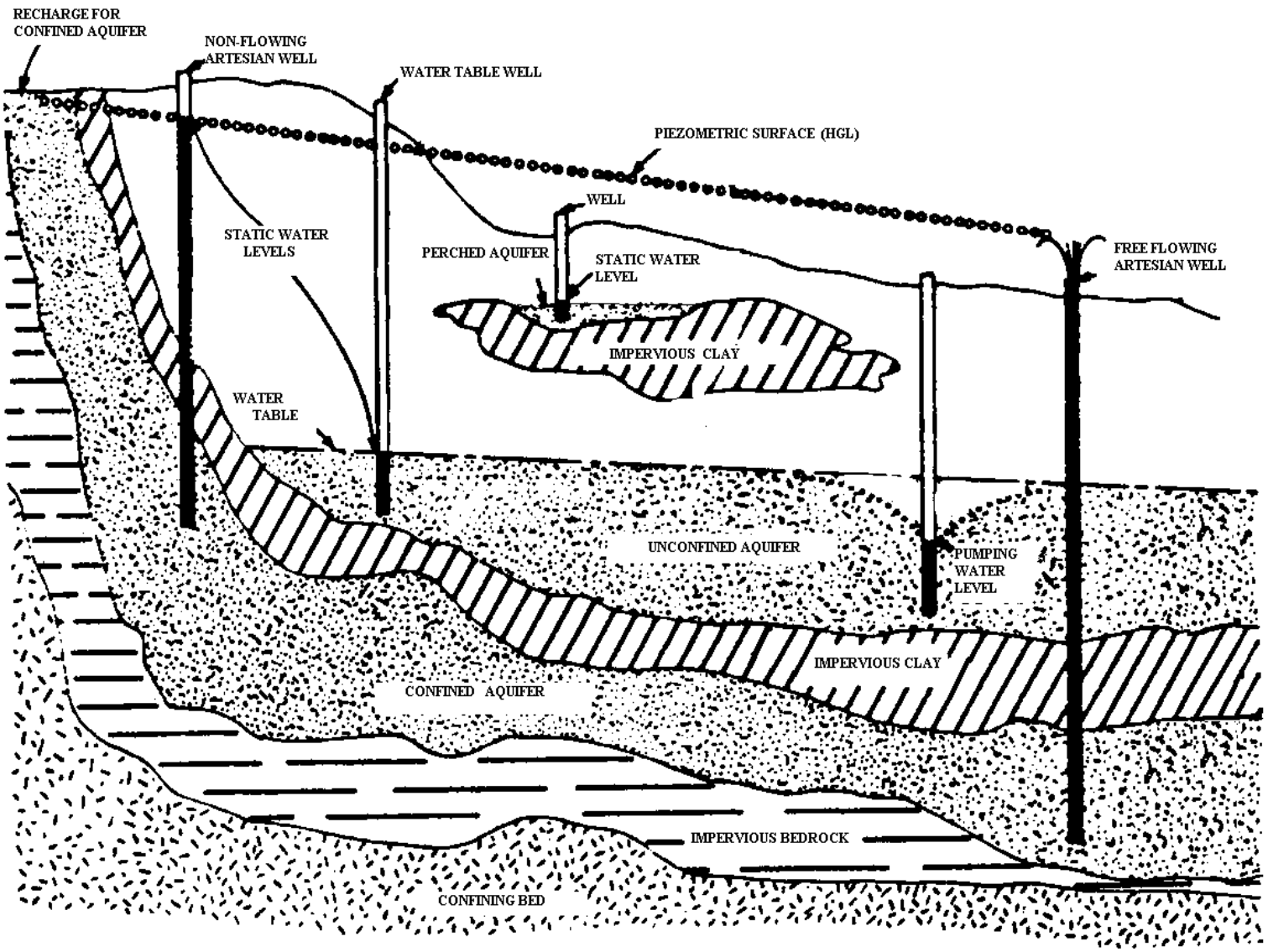

Artesian and Water Table Aquifers

SANITARY CONSIDERATIONS

Sanitary hazards must be considered when locating a well. NMED should be consulted regarding requirements concerning well location, especially with regards to potential sources of pollution. The minimum distance from a well to a potential pollution source should be at least 200 feet. Potentially hazardous conditions such as petroleum storage areas, chemical or radioactive disposal sites, and industrial waste treatment facilities may require special consideration as far as well location is concerned. Wells should never be located in a 100-year flood plain.

WATER WELL CONSTRUCTION

Water wells may be classified according to the method of construction. The type of construction will depend on the depth of the well, the geological formations to be encountered, and the amount of water needed for the system.

Small wells, particularly private wells, may be dug or driven**.** Public water systems usually require more water than either dug or driven well can produce. The most common method of construction used by public water systems is the drilled well. These wells are ideally suited to deep water bearing formations where larger yields are available. This type of well, when properly constructed offers good protection against contamination from the surface**.** Two different methods of constructing drilled wells are the cable tool or percussion method and the rotary drilling method**.**

CABLE TOOL METHOD

The impact created by raising and dropping a heavy drill bit and stem crushes and dislodges pieces of the formation as the well is drilled**.** The up and down motion of the drill bit mixes the cuttings with water to form slurry and a bailer is used periodically to remove the slurry. A bailer is made of a 10 to 20 foot section of pipe with a foot or check valve at the bottom. The casing is usually put in place as the well is drilled, especially in loose formations such as sand and sandy loam. Wells drilled by the cable tool method are more likely to have problems with vertical alignment than those drilled by the rotary method.

ROTARY DRILLED WELLS

These types of wells use power driven drill stems, which in most cases are hollow. The drill bit is attached to the lower end of the drill stem and breaks up the material as it advances. Water or drilling mud is pumped down the drill stem to cool the bit. It also picks up the cuttings or drilling fines and carries them to the surface. The mixture of mud cuttings is discharged to a settling pit where the cuttings are removed and the drilling mud is recirculated. When the well hole is completed, the drill stem is withdrawn and the casing is put in place.

VERTICAL CASING ALIGNMENT

It is important that the casing is in proper vertical alignment when it is installed. Even a slight misalignment may create stress on the pump shaft and bearings that can lead to mechanical failures. If a casing is misaligned, it may be necessary to install a submersible well pump instead of a line shaft pump. This may be the only solution to chronic line shaft failures in a misaligned casing. There are several ways to check casing alignment. Down hole TV inspection is popular because the condition of the casing and screen can be checked at the same time.

SANITARY PROTECTION OF THE WELL

After a well has been drilled, care must be taken to prevent any surface contamination from entering the water supply. First, the casing is set to prevent the well from caving in or becoming contaminated from undesirable water sources located above the aquifer. The casing should be grouted with concrete on the outside to a depth of at least 50 feet or until an impervious layer of clay or rock is encountered. It may be necessary to grout deeper than this to seal any undesirable water formations off the well. The depth of grout is determined by NMED on a case-by-case basis. In most instances, grouting will be required to extend to the water table. The grout must be pumped into the well from the bottom to the top. Otherwise, air will be trapped and prevent proper sealing of the cavity.

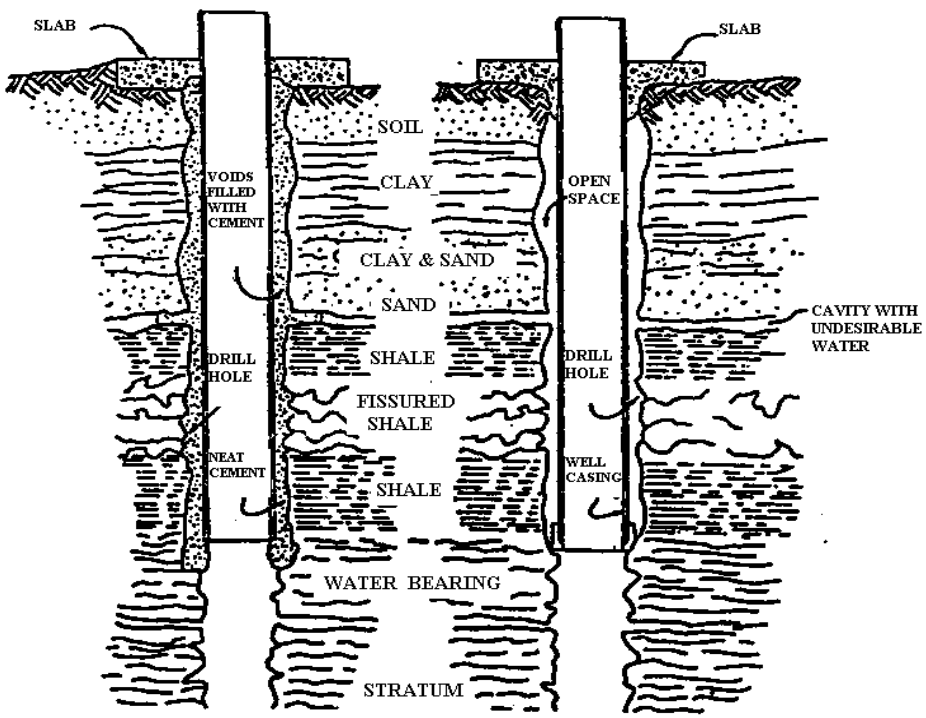

Grouting A Well Casing

The casing should extend at least 6 to 12 inches above the well pad, depending on whether the well is located in a well house or out in the open, to prevent standing water from entering the well. The well pad should be sloped away from the casing. A sanitary well seal must be used to connect the well head and motor to the casing. Well seals are usually made of rubber or neoprene. A welded seal is also approved and used in some cases.

Well casing and discharge column pipe vents should extend at least 18" above grade. The outlets should be turned down to prevent rainwater from entering and screened to keep bugs out. Well housings should never be located in a pit. Abandoned wells should be plugged to a depth of at least 10 feet. In some states they must be completely cemented.

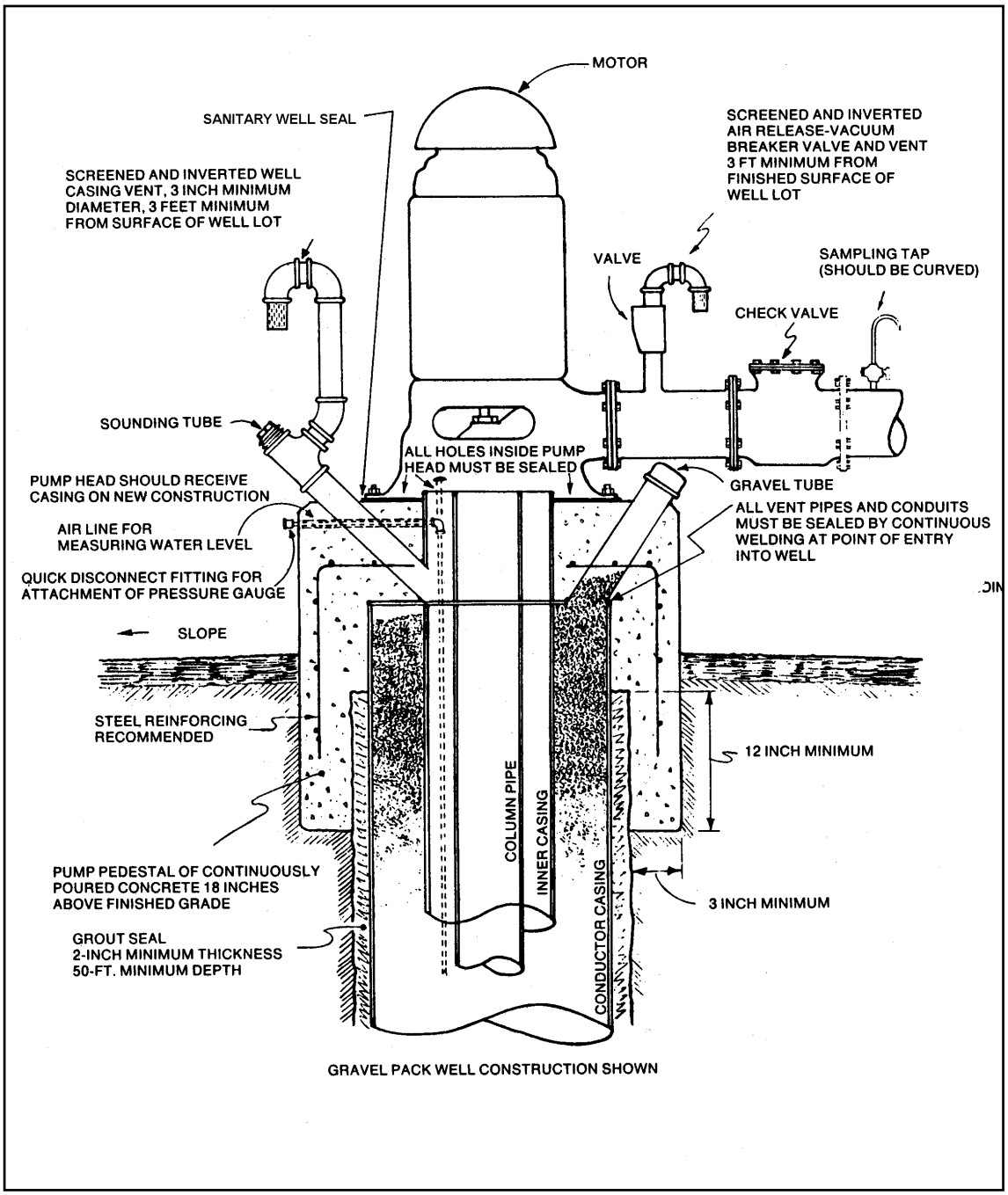

DEVELOPING A WELL

Once construction is complete, the well is developed to remove the very small sand, shavings, and drilling mud from the surrounding aquifer. Two methods used to develop the well are surging and backwashing. Water is forced in and out through the screen as it flushes out the drilling mud and fine sand. Usually a pump much larger than the actual production pump is used. The well is pumped at the highest rate possible. This is done not only to remove the loosened mud but also to determine the well log data such as the yield, static and pumping levels, and specific capacity. The development of this data may require that this pumping rate be maintained for at least 8 hours.

It may take much longer to clear the well of drilling mud prior to disinfection. It is also important to determine the well recovery rate after the test is completed. The pump used to develop the well should never be the pump that is to be installed upon completion.

GRAVEL PACKED WELLS

Wells that are located in fine sand formations, where sand pumping presents a problem, are usually gravel packed. If gravel packing is not used, the screen openings may have to be so small that the yield of the well is dramatically reduced. A layer of gravel is placed around the screen to hold the sand back and allow a larger well screen to be installed. The gravel packing is usually three times the diameter of the well screen or a minimum of 4" thick. The selection of the size of the gravel to be used depends upon the type of sand formation that is encountered and the type of screen that is being installed.

The gravel does not filter the sand. It is the increasing velocity, as the water gets closer and closer to the screen, which draws the sand into the well. The gravel pack holds the sand out away from the screen where the velocities are significantly lower than they are at the point where the water enters the screen. This minimizes the amount of sand that enters the well.

As sand is pumped out of the well, the gravel will fill in the cavity that is created and the gravel level will drop. This can result in exposing the well screen if gravel is not added periodically. The gravel is usually added to the well through a gravel packing pipe. This pipe is usually 4 inches in diameter. The level of the gravel pack should be checked at least yearly.

Gravel should be cleaned and disinfected with a strong chlorine solution before it is added to the well. The level should be rechecked as the new gravel is added. Gravel should never be allowed to stand in the packing pipe. The vibration that is created when the pump is running can cause the gravel to compact and block the pipe.

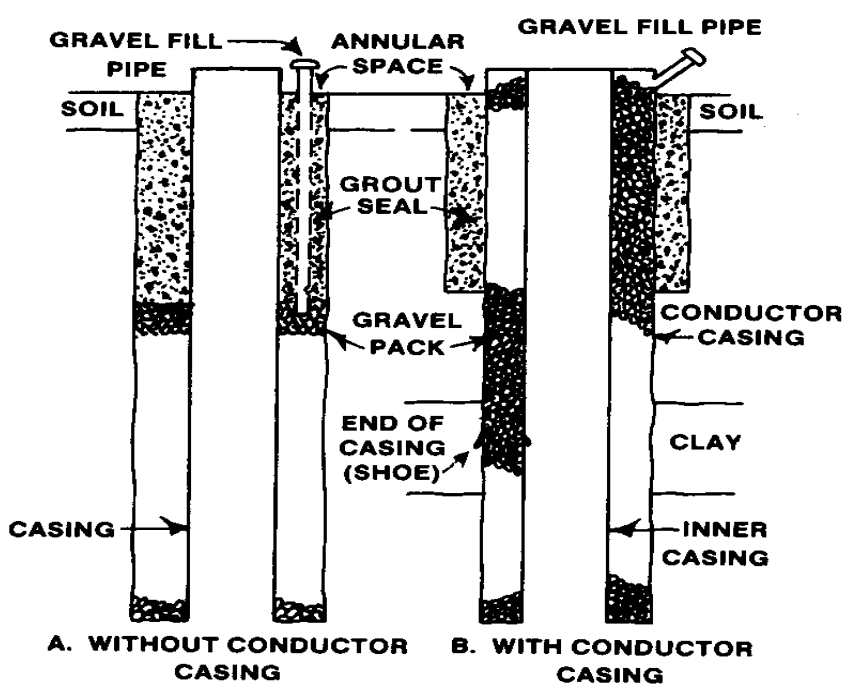

GRAVEL PACKED WELLS

DISINFECTING WATER WELLS

The final step, prior to putting any new well, or old well that has had major cleaning or repair, in service, is disinfection and testing for bacteriological quality. The well should be flushed or redeveloped to remove drilling mud and debris prior to disinfection.

Disinfection is achieved by the addition of a strong solution of chlorine to the well. The chlorine dosage should be at least 50 mg/l. If dosages in the range of 200-400 mg/l are added, less contact time will be required. The well should then be agitated periodically by surging. The contact time at a dosage of 50 mg/l should be 18 to 24 hours but at 200 mg/l only about 2 hours is needed. However, with longer contact times, the chlorine will move farther out into the surrounding aquifer.

The well should be flushed to remove the remaining chlorine once disinfection is completed. The bacteriological (Bac-T) samples should then be taken from the well and submitted for testing. These samples must be taken daily until they are negative on two consecutive days.

REFERENCES:

Sacramento, *Small Water Systems Operation and Maintenance*, 4th Edition, 1999, Chapter 3
Groundwater and Wells, 2nd Edition, 1986, Chapter 4
Groundwater and Wells, 2nd Edition, 1986, Chapter 10
Groundwater and Wells, 2nd Edition, 1986, Chapter 15

WELL PUMPS

Most well pumps that are installed in public water systems are vertical turbine centrifugal pumps. The main difference between vertical turbines and other types of centrifugal pumps is that the vertical turbine impeller discharges water out of the top of the impeller. This water flows upward along the pump shaft, instead of at a right angle to the shaft. These pumps can generate the high discharge pressures needed to pump water several hundred feet out of the ground.

"Staging", or stacking several impellers on the shaft, is how the high pressures are generated. As the water passes from the discharge of one impeller to the suction of the impeller above it, the pressure that the pump develops is increased. If five impellers that each generate 100 feet of head are staged in a pump, the pump will generate 500 feet of head pressure. Anytime pumps are operated in series, where one pump or impeller discharges to the suction of another pump; the pressure will increase while the flow remains constant.

In some very small, shallow wells airlift pumps may be used. These are normally not suitable for wells supplying most public water systems.

VERTICAL TURBINE INSTALLATIONS

There are two kinds of vertical turbine pumps installed in wells. One of these is known as a submersible pump. A submersible pump will have the motor located beneath the pump. In a small well, it is the least expensive centrifugal well pump to purchase and install. Because there is no pump shaft running to the surface, the submersible is also the ideal pump installation in wells where vertical casing alignment problems exist. The biggest disadvantage of submersible pump installations is that the pump must be pulled from the well when the motor needs repair. Since this is usually the most common type of repair for water wells, the cost of maintenance for submersible pumps is very high.

The other type of vertical turbine well pump is known as a line shaft pump. Line shaft pumps have the motor located on the well head. A line shaft runs down the discharge column pipe to the pump. The shaft is supported by line shaft bearings that center and stabilize the shaft in the column pipe. Line shaft pumps will cost more than submersible installations.

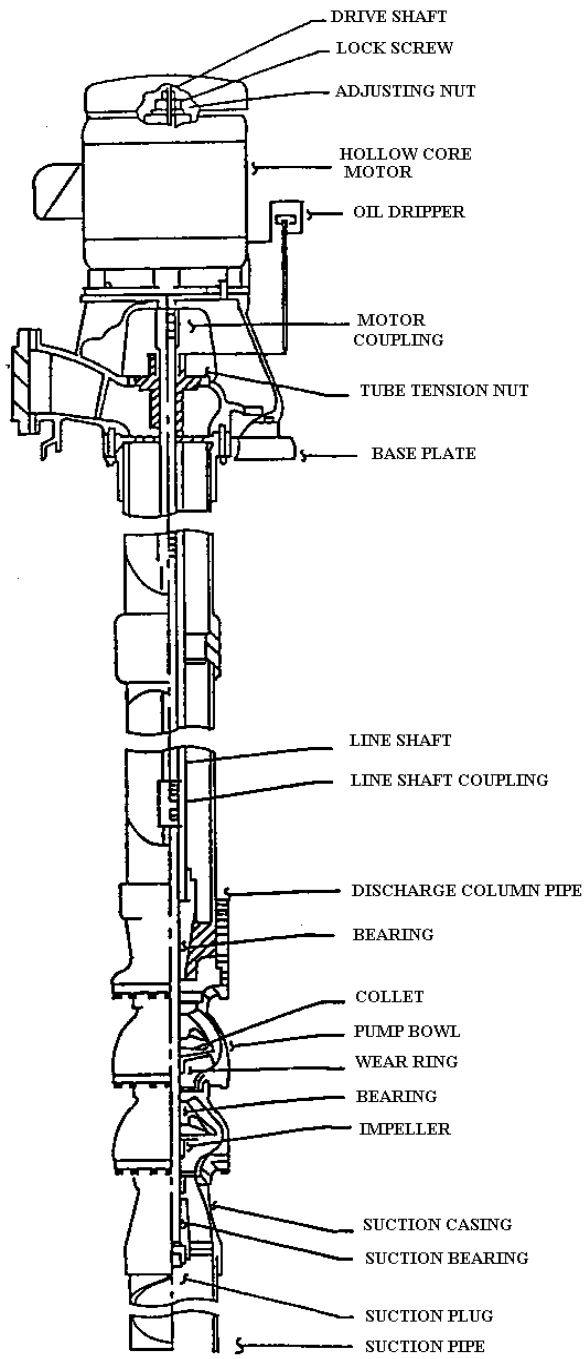

VERTICAL TURBINE CENTRIFUGAL PUMP

Vertical casing misalignment may make a line shaft pump installation impractical. The stress placed on the shaft and bearings can lead to chronic maintenance problems. The biggest advantage of a line shaft installation is that the motor can be repaired without pulling the pump and column pipe from the well.

LINE SHAFT PUMPS

The line shaft must be supported to minimize vibration and radial (side-to-side) movement when the shaft spins. A line shaft bearing, also known as spider support or spider bearing, will be located in every section of discharge column pipe. Since column pipe sections vary in length from 12 to 20 feet, there are 5-8 bearings for every 100 feet of shaft. These bearings must be lubricated. There are two methods of lubricating line shaft bearings. One method utilizes water to lubricate the bearings while the other uses an oil-lubricated system.

LINE SHAFT BEARINGS

Water lubricated line shaft bearings rely on the water that is pumped through the column pipe for cooling and lubrication. When the water table is very shallow, water in the column pipe will reach the bearing almost immediately. If the water table is deeper it can take several seconds for water to reach the uppermost bearings. If these brass or rubber bearings are allowed to spin for even a few seconds without lubrication they will fail prematurely. This type of installation will normally have some type of pre-lubrication system that allows water to run down the shaft and lubricate the top bearings before the pump starts. It may be set on a timer or it may drip continuously. Even with this type of pre-lubrication system, it is difficult to guarantee that all of the bearings that are located above the water table are properly lubricated before the pump starts.

Oil lubricated line shaft pumps are normally installed when water table depths exceed 100 feet. In an oil-lubricated system, the shaft spins inside a tube that is kept full of oil. The oil used in these systems must be EPA approved. These oils can be either vegetable or mineral based. Line shaft bearings are located inside the tube. Spider supports stabilize the tube inside the discharge column pipe.

OIL DRIPPER SYSTEMS

Oil lubricated line shafts will usually be supplied with a dripper system to keep the shaft tube full of oil. The dripper system will consist of two dripper assemblies. One dripper will be setup to drip constantly and the other will be activated by a solenoid and will drip only when the pump is running. The solenoid-activated dripper will normally be supplied with a cooling water jacket that helps to maintain a constant oil temperature in the dripper.

The cooling water is needed because temperature fluctuations will cause the viscosity or thickness of the oil to change. As the viscosity changes the drip rate will also change. The effect that these changes will have on the drip rate must be taken into consideration when the drip rate is adjusted. The drippers should be checked and adjusted at least twice a year, in the early summer and early winter.

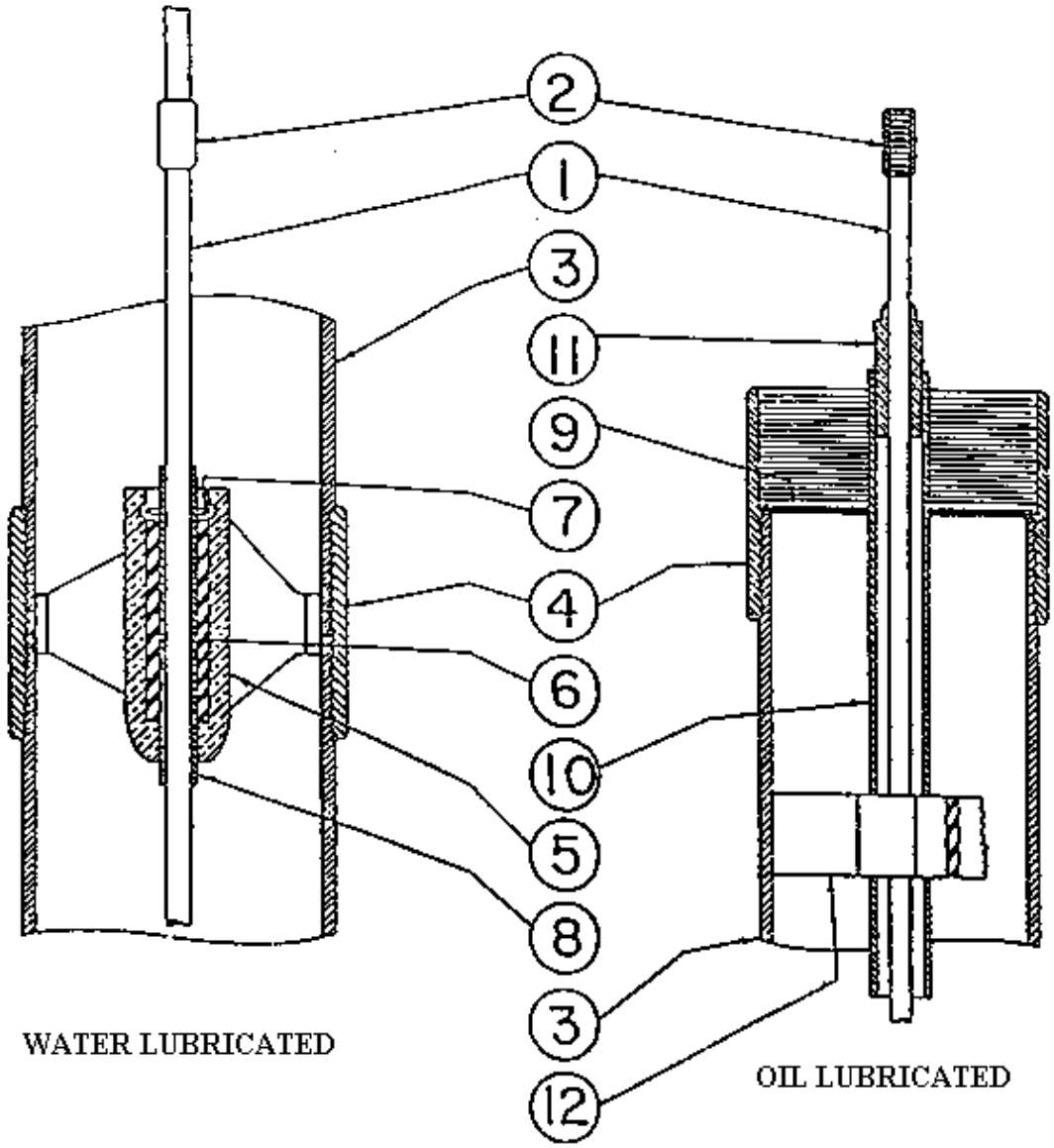

1 - Line Shaft
2 - Shaft Coupling
3 - Column Pipe
4 - Column Pipe Coupling
5 - Stabilizer Support (Spider)
6 - Rubber Shaft Bearing
7 - Snap Ring
8 - Shaft Sleeve
9 - Column Pipe Spacer Ring
10 - Oil Tube
11 - Line Shaft Bearing
12 - Tube Stabilizer (Spider)

SHAFT LUBRICATION SYSTEMS

ADJUSTING DRIPPER SYSTEMS

The constant dripper should be adjusted when the well has not been running for several hours. The oil temperature will be about the same as the ambient air temperature. This is the situation most of the time that the constant dripper is needed. If it is set in the summer and not checked again when it turns cold in the winter, the drip rate will be much lower as the oil temperature drops and the oil becomes thicker. The constant drip rate should be set at 1 drip/minute.

The automatic dripper should be set after the well, and dripper-cooling water, has been running for an hour or so. If the drip rate is set when the well is not running and the oil temperature is higher, the drip rate may be too low when the cooling water lowers the oil temperature. In most wells, the automatic drip rate should be set at 6-10 drips/minute. Wells over 500 feet deep may require drip rates of up to 18 drips/minute.

WELL SCREENS

There are several types of well screens that can be installed in most wells. They range from well casing that is perforated on-site with a cutting torch to continuous-slot well screens made of steel, or sometimes plastic, strips that are wrapped around a wire cage. Louvered or perforated casing is also used in many installations. Continuous-slot screens are the most expensive and generally considered to be the best choice because of the low friction loss encountered as the water enters the well. These screens typically have openings that are equal to 40-50% of the total surface of the screen.

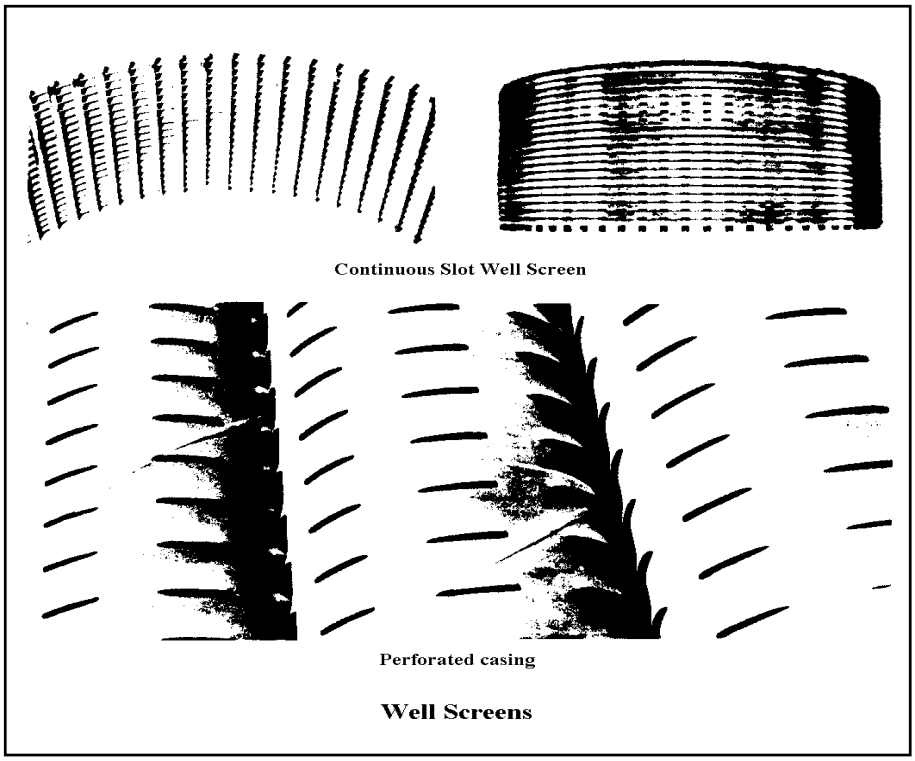

REFERENCES:

Sacramento, *Small Water Systems Operation and Maintenance*, 4th Edition, 1999, Chapter 3
Groundwater and Wells, 2nd Edition, 1986, Chapter 17

WELL HYDRAULICS

The amount of water a well will produce depends mainly on the type of aquifer, well construction, and the depth of the zone of saturation. The annual recharge rate from percolation, along with the ability of the water bearing formation to transmit water to any given point, will also influence well production. The performance of a well can be determined by taking readings of the hydraulic conditions. An operator must be familiar with these terms and definitions, in order to accurately troubleshoot problems that may be discovered.

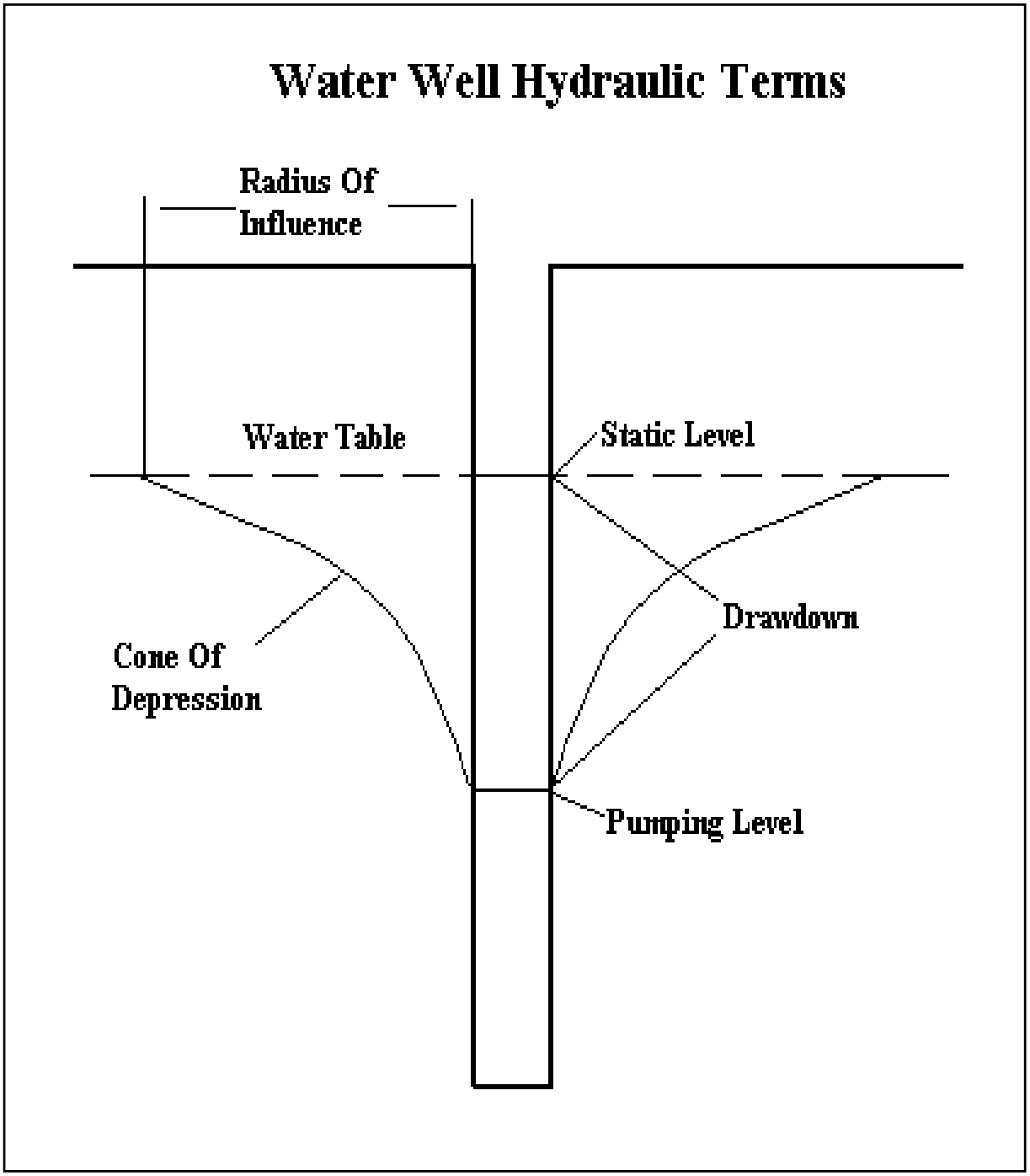

Static level is the water level in a well when the pump is not operating**.**

Pumping level is the water level in the well when it is producing.

Drawdown is the difference in elevations between the static level and the pumping level. The amount of water produced is approximately proportional to the drawdown. For example, increasing the yield by 10% will increase the drawdown by 10%. The drawdown that occurs when a well is running is roughly equal to the head loss encountered in moving the water into the well. Water bearing formations of gravel, limestone and course sand will usually provide more water with less drawdown than formations containing fine sand or clay.

Specific capacity is the relationship between the yield of a well and the amount of drawdown in the well. It can be expressed as a ratio of the yield, in terms of gallons per minute, to the drawdown in feet. A well producing 100 gpm with a drawdown of 20 feet would have a specific capacity of 5 gpm per foot of drawdown.

$$\frac{\textbf{100 gpm}}{\textbf{20 feet}} = \textbf{5 gpm/foot}$$

In this particular case every time the yield is increased by 5 gpm the drawdown will increase by one foot. This relationship will exist until the yield exceeds the aquifer's ability to deliver water to any single point. When this limit is reached, the drawdown increases dramatically with little or no increase in the yield.

Cone of depression is directly related to the drawdown in the well. As the pump draws down the water level, a portion of the aquifer surrounding the well is drained of water. A cone shaped depression is formed in the water table around the well. The shape of the cone will vary depending on the type of formation in which the well is located. A fine sand formation will usually create a steep cone of depression, while a shallow cone is usually found in coarse sand and gravel formations.

Radius of influence is the farthest distance from the well that the cone of depression affects the water table. This distance can be determined by sinking test holes around the well and monitoring the water levels in them while the well is pumping.

Recovery time is the amount of time required for the aquifer to stabilize at its static water level once pumping has stopped. This can also be determined by monitoring the water levels in the test holes used to determine the radius of influence.

MEASURING STATIC AND PUMPING LEVELS

Several methods can be used to determine the elevation of water in the well. This can be accomplished by lowering some type of measuring device, that can locate the water level, into the well casing through a sounding tube (sometimes called a drawdown tube). A chalk line can be used if the approximate level is known. The bottom five to ten feet of the line is chalked and then lowered into the well to the estimated water level. The amount of line that is wet (easily identified by the wet chalk) is subtracted from the total amount lowered into the well to accurately locate the water level.

Another device that is used to determine water levels consists of an electrode attached to a cable and connected to a DC power supply. This type of device is sometimes referred to as an "M-scope." The electrode is lowered into the well casing until it contacts the water surface. Contact with water closes the electrical circuit and lights an indicator lamp on the power supply. The length

of the cable that is in the casing is measured to determine the water level. The biggest disadvantage to using this type of "sounding" device is that the cable may wrap itself around the column pipe, making removal a real problem.

Another effective method of determining these levels involves using an air line. The air line is installed inside the casing and extends down to a point just above the bowls of the pump. A pressure gauge, installed at ground level, and an air pump (bicycle or hand pump) are all the equipment that is needed. The length of the air line must also be known in order to use this method.

As air is pumped into the line, the pressure gauge reading will begin to increase. When the pressure reading no longer rises, all of the water has been forced out of the pipe by the air. This gauge reading will represent a column of water the same height as the distance the line extends below the surface of the water. Subtracting this distance from the total length of the line will locate the elevation of the water in the well. The gauge reading may be used directly if the gauge is calibrated in feet of head. If the gauge reading is in pounds per square inch (psi), it must be multiplied by a factor of 2.31 ft/psi before being subtracted from the length of the air line. As an example, the air line is 300 feet long and the gauge reading is 100 feet of head when the pump is not running:

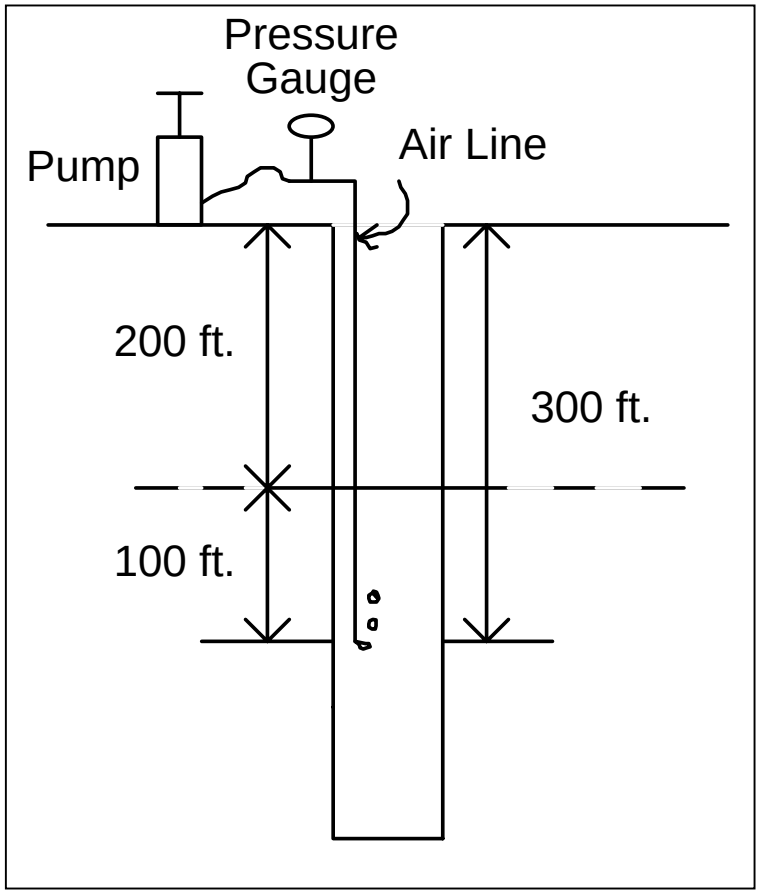

300 ft.(air line) - 100 ft.(head) = 200 ft. to the water

The static level is determined after the pump has not been running for several hours or overnight. The pumping level should not be determined until the well has been pumping long enough to insure that the pumping level has stabilized. It could take from 30 minutes to several hours to stabilize the pumping level.

THE WELL LOG

When the contractor is developing the well, information about the well is being recorded for the well log. A well log will contain information that includes:

WELL LOG DATA

- Depth of the Well
- Length of Screen
- Pump Setting
- Yield
- Static Water Level
- Pumping Water Level
- Drawdown
- Specific Capacity
- Other Geological Data Regarding the Aquifer

The well log is essential for troubleshooting well operational problems. It represents how the well should perform when everything is working right. Without this data it is very difficult to determine what, if anything, is wrong with current the well performance. If a well is over 20 years old, there is a good possibility that the well log can't be located. This is no reason to panic yet. Contractors are responsible for filing a copy of every public water supply well log with the State Engineer's Office. Copies of well logs can be obtained by contacting the State Engineer. Information on surrounding wells may also be obtained to assist in gathering data used to locate new wells.

REFERENCES:

Groundwater and Wells, 2nd Edition, 1986, Chapter 9

TROUBLESHOOTING WELL PROBLEMS

There is little information that can be gathered that will indicate how a well is performing. Changes in the **s**tatic level, the pumping level or the yield of a particular well will generally indicate a problem has developed. In addition to this information, the amps on the motor is the only other indicator poor of well performance. It is important to check static and pumping levels periodically to prevent any problems that may develop from becoming serious. The well log is used as a reference for each set of readings. Anytime there is a well problem, both the yield, and the specific capacity will be reduced.
.

WELL RELATED PROBLEMS

Let's take as look at the example illustrated below. From the well log and current measurements it has been determined that the static level has remained the same but the pumping level has dropped several feet.

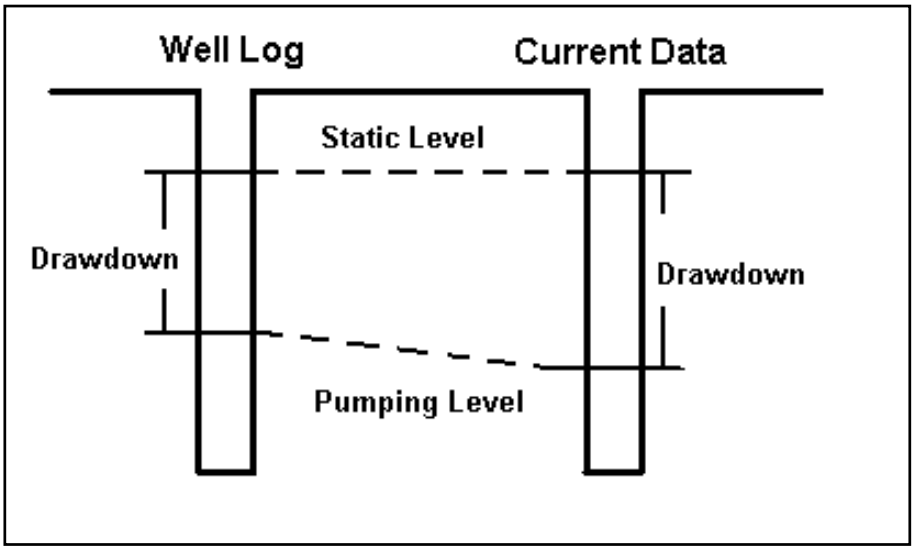

Under these conditions it should be noted that the drawdown has increased. The drawdown is equal to the head loss encountered in moving water into the well. Since the drawdown has increased, there is more head loss now than when the well was new. It is unlikely that the conditions in the aquifer have changed. Therefore, the well screen must be getting clogged.

CLOGGED WELL SCREENS

There are several ways that a well screen can become clogged. The most common cause is chemical scaling or lime encrustation on the screen. Newer wells may develop a condition called "sand bridging." Another possibility is clogging due to iron bacteria colonies that are growing on the screen.

SAND BRIDGING

Sand bridging is a condition that is normally only found in new wells. It occurs when sand, drawn toward the well, blocks the screen by forming an arch across the openings.

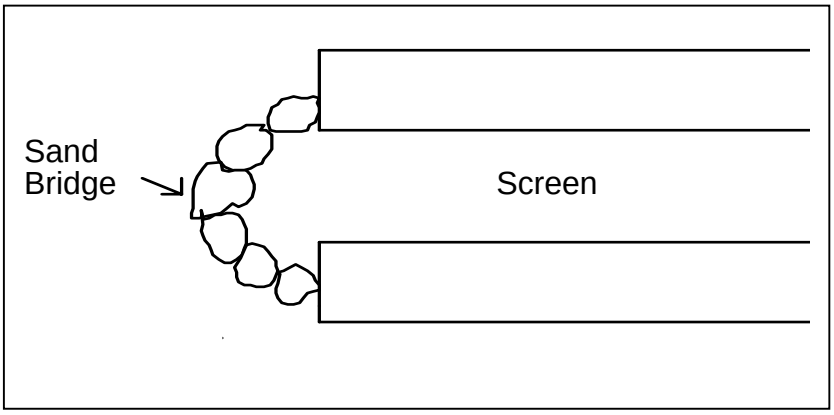

Sand bridging is usually a result of improper development of the well or inadequate gravel packing. Surging water through the screen may break up the bridging. If surging doesn't work, it may be necessary to pull the pump and mechanically clean the screen with high-pressure jets to correct the condition. The well should be re-developed before replacing the well pump.

IRON BACTERIA

Clogging caused by iron bacteria is a problem for many wells in the Southwest. If the well has been in service for several years, and the water supply is low in alkalinity and corrosive, there is a good possibility that the clogging is a result of the build up of iron bacteria colonies on the screen. Iron bacteria feed on the iron that is naturally present in some supplies. They will attach themselves to iron and steel screens and a colony of the bacteria will begin to grow. Clogging caused by iron bacteria is very difficult to remove. Chemical treatment with massive doses of chlorine (200-300 mg/l) followed by surging or even mechanical cleaning may be the only means of clearing clogged screen openings. Even then, it is unlikely that the entire colony has been removed. The remaining bacteria will begin to grow, causing a recurrence of the problem. Wells with iron bacteria should be treated with chlorine periodically to inhibit the regrowth for as long as possible.

LIME SCALING

Lime scaling is most likely to occur when the water contains high amounts of alkalinity and hardness. Like iron bacteria, lime scaling will tend to be a chronic problem where the conditions that promote its formation exist. There are several ways to clean a screen of lime scale.

CLEANING ENCRUSTED WELL SCREENS

Well screens that are clogged with scale can be cleaned using one of several techniques. The four most commonly used methods are listed below:

1. **Surging** water through the screen may break up loose scale that is just beginning to form. This is accomplished by starting and stopping the pump to allow water in the column pipe to fall back into the well and create a surge out through the screen. This is sometimes taken a step further by holding the check valve open when the pump is stopped so that more water will rush down the well and out into the surrounding aquifer. In order for this method to be effective, the condition must be identified before the scaling becomes very severe.

2. The **percussion** method may be the most dangerous method of cleaning a well screen. It involves the detonation of some type of explosive within the well casing. The theory behind this process is that the explosion will create shock waves that will vibrate the screen enough to shake the scale loose. This is sometimes accomplished by firing a blank down the well. This is only effective in very small, shallow wells where there is not much water standing above the clogged screen.

   In most public supply wells a larger charge is needed, and it is usually placed down the well in the vicinity of the screen. Blasting caps and primer cord are the most common explosives used in these situations. In addition to the obvious dangers involved in handling these types of explosives, the possibility for damaging the well screen also exists.

3. The **acidizing** method will clean all but the most severely scaled screens. Acid is poured down the well casing and allowed to stand for 8 to 12 hours. The acid will react with the lime and dissolve the deposits on the screen. The well is then surged to help loosen the remaining scale and flushed.

   Always use inhibited acid! Inhibited acid is chemically weakened. In this weakened state it will dissolve the lime without attacking the screen or pump parts. There are inhibited acids available in solid forms, sulphamic acid for example, that can make the acidizing process much easier and more effective. The pelletized acid can be poured into in casing where it will sink to the bottom of the well and dissolve in the area of the screen.

4. **Mechanical cleaning** may be the only method that is effective in situations where severe clogging exists. Mechanical cleaning will require the removal of the pump from the well. The screen will be cleaned using a larger wire brush or high-pressure water jets and then bailed to remove the debris that is knocked loose. In extreme cases, the screen may have to be pulled and cleaned or replaced. Not only is this very expensive, but it can also result in the collapse of the gravel pack around the screen. Anytime the pump is pulled from the well and maintenance is performed, the well must be disinfected prior to being put back into service.

PUMP RELATED PROBLEMS

From the well log and current measurements, it is determined that the static level is the same, but the pumping level has risen several feet. Water production from the pump has also decreased. This reduced drawdown and yield from the well indicates a problem with the pump.

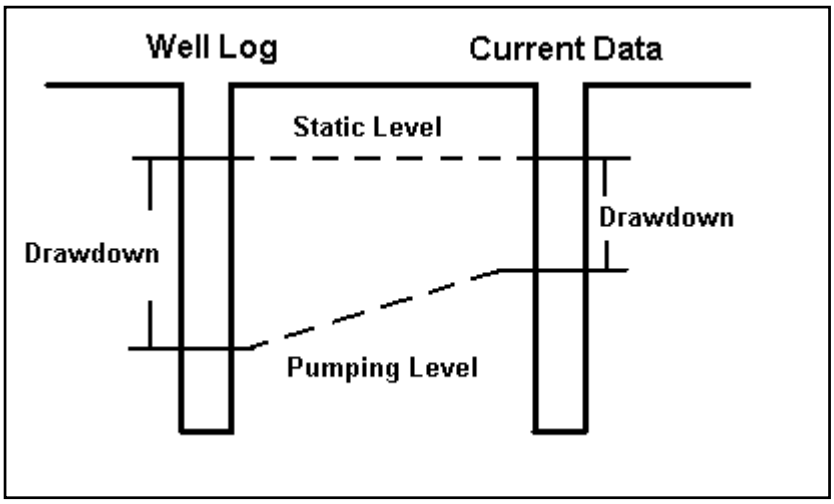

When the drawdown and pump production have both decreased, it usually means the pump efficiency is reduced. The most common cause of this problem results from the clearance between the impeller and the pump bowls being too wide. Water will begin to slip around the impeller instead of being pumped out of the well.

If the impeller clearance is properly set, the only other cause of this type of condition is some type of mechanical problem with the pump or line shaft. Mechanical problems will require pulling the pump, so the first step in troubleshooting this situation is to adjust the impeller clearance. Adjusting the impeller clearance is also referred to as adjusting the "lateral setting" or "setting the stretch" on the pump.

ADJUSTING IMPELLER CLEARANCE (LATERAL SETTING)

When the pump is operating, the proper clearance between the wear rings and the impeller should be between 1/32-1/4" (depending on the impeller design). Wear rings, as the name implies, are designed to eventually wear out. The clearance between the impeller will increase as wear occurs. Specific adjustments can be made to raise or lower the impellers and bring the clearance back within acceptable tolerances.

Line shaft stretch must also be taken into account. Even though the shaft is made of hardened steel, it will stretch under load. There are several factors that will impact the shaft stretch.

FORCES THAT CAUSE SHAFT STRETCH

1. **The weight of the shaft**
2. **The weight of the impellers**
3. **The downthrust exerted against the impellers**

The most common means of raising and lowering the shaft is by adjusting the top shaft nut or adjusting nut, located on the top of a hollow core motor. The rotor in a hollow core motor is hollow and the pump shaft can slide up and down through the rotor. The adjusting nut prevents the shaft from slipping down through the motor. Tightening and loosening the top shaft nut will then raise and lower the pump impellers. Smaller shallow wells may not have hollow core motors. If this is the case, the adjustment is made at a special motor coupling or by shimming the motor. After a lateral adjustment is complete, motor amps can be used as a tool to check the adjustment.

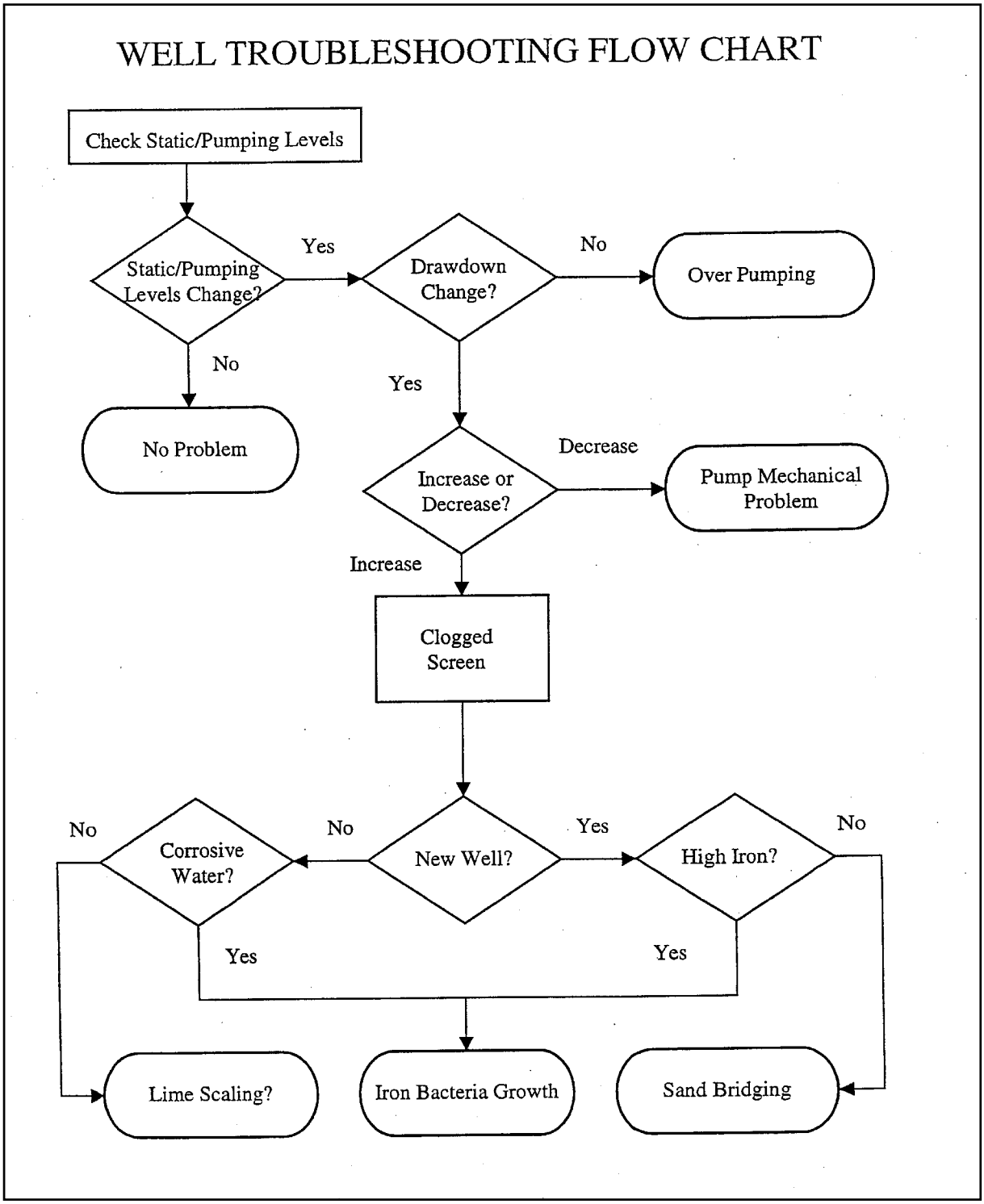

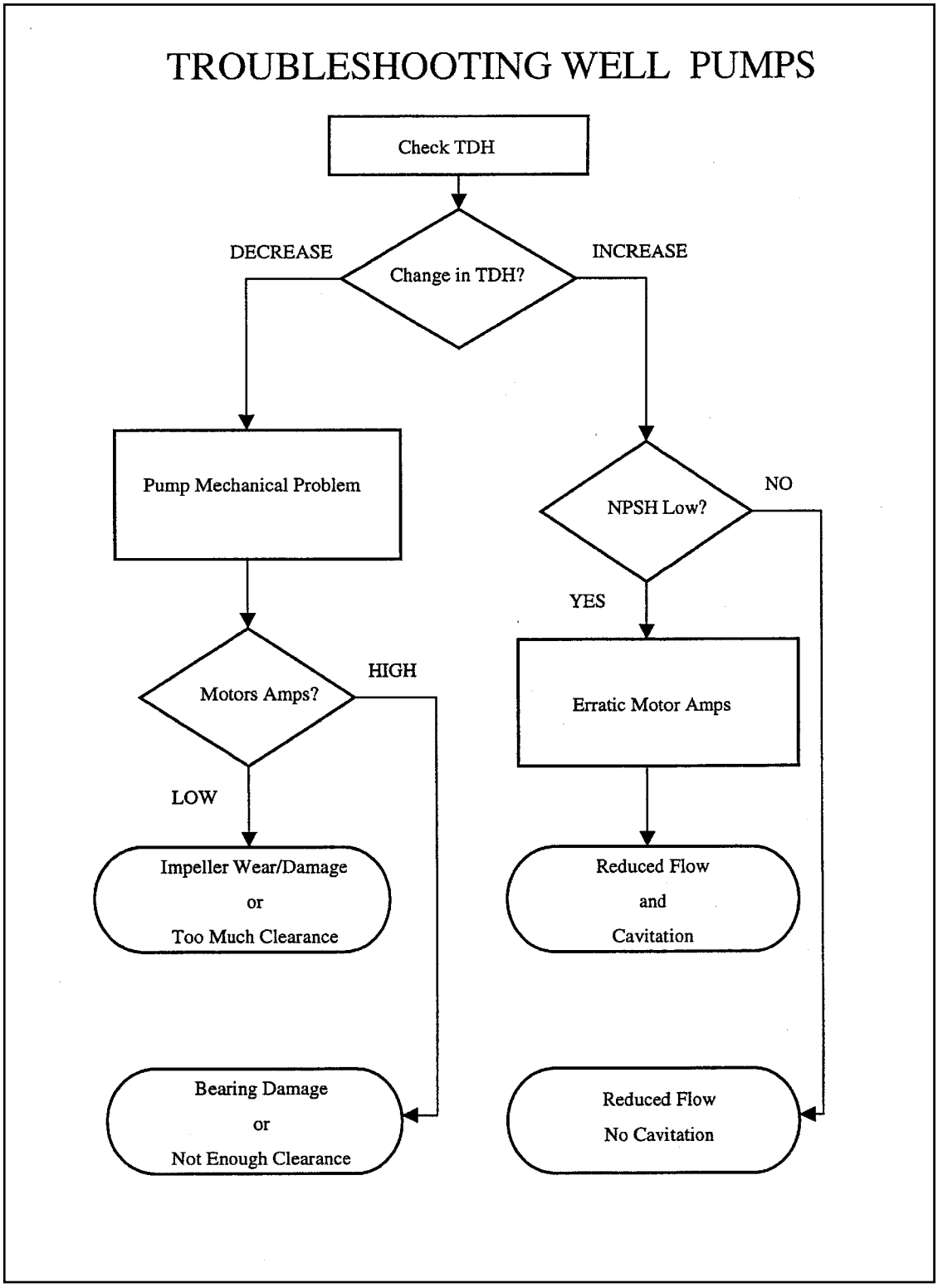

REFERENCES:

Sacramento, *Small Water Systems Operation and Maintenance*, 4th Edition, 1999, Chapter 3
Groundwater and Wells, 2nd Edition, 1986, Chapter 19

BASIC STUDY QUESTIONS

1. What is meant by the term percolation?

2. What is the primary reason for grouting a well casing?

3. What is the drawdown in a well?

4. What are the requirements for disinfecting a well?

5. Which type of well pump will help minimize the problems caused by well casing misalignment?

ADVANCED STUDY QUESTIONS

1. What are the limitations for water lubricated line shafts?

2. Why is a gravel pack used in wells?

3. What is specific capacity?

4. Public wells should be located how many feet from potential pollution sources?

5. What should be done when treating a well for iron bacteria?

BASIC SAMPLE TEST QUESTIONS

1. The distance from the well to the edge of the cone of depression is:

   A. Drawdown
   B. Radius of influence
   C. Infiltration
   D. Zone of saturation

2. If the drawdown increases, the screen is becoming clogged.

   A. True
   B. False

3. Sand production is usually at highest

   A. During startup
   B. After it has run for several hours
   C. When there is a pump-related problem.
   D. All of the above

4. Which of the following does not provide contamination protection for a well?

   A. Grout
   B. Well pad
   C. Motor coupling
   D. Sanitary seal

ADVANCED SAMPLE TEST QUESTIONS

1. If the pressure gauge on an air line reads 25 psi and the air line is 400 feet long, how far is it to the water level?

   A. 25 feet
   B. 58 feet
   C. 342 feet
   D. 375 feet

2. The friction loss on the suction side of the well pump is equal to:

   A. The drawdown
   B. The specific capacity
   C. The pumping level
   D. The lateral setting

3. When the drawdown in a well increases:

   A. The screen is clogged
   B. The pump impellers may be worn
   C. The specific capacity increases

4. The drawdown in a well has decreased and the motor amps are high. The most likely problem is:

   A. The screen is clogged
   B. The pump impellers are worn
   C. The line shaft bearings are failing
   D. The TDH has increased

SURFACE WATER

Water that is taken from lakes, rivers, or impoundments is known as surface water. Many large systems make use of surface supplies because these rivers and lakes offer storage of large amounts of water. The chemical characteristics of surface water differ from ground water in several ways and generally require a greater degree of treatment to meet the Drinking Water standards. The minimum treatment required for surface water is filtration and disinfection.

As ground water percolates through the soil, the natural filtering action removes much of the material responsible for turbidity in surface waters. This filtration and the tremendous retention time in the aquifer provide for the removal of many of the bacteria in ground water. The mineral content of the ground water may be greater than that of surface water. These minerals are dissolved in the water as it percolates through the soil.

Some systems that were once thought to be groundwater are now defined as "groundwater under the influence of surface water" by the amended SDWA regulations. These systems must now treat their water like other surface supplies and filter and disinfect. Surface or boxed springs are now considered to be surface water supplies. Infiltration galleries are also considered to be surface supplies. These are wells that are located so close to a river or stream that the water in the surface supply percolates directly into the wells because the radius of influence overlaps the riverbed.

Surface waters will generally have more bacteria and turbidity present than ground water. Taste and odor problems are usually greater in surface water due to algae, bacteria, and fungi that are present in the water. Ground water may also have taste and odor problems that are usually caused by hydrogen sulfide gas and minerals like iron.

LAKES AND RIVERS

There are certain advantages and disadvantages related to taking water from rivers or lakes. Lake supplies maintain a more constant quality of water. The turbidity, temperature, and pH do not fluctuate as much from day to day as a river supply. Minerals tend to concentrate in lakes. Iron, manganese, and other dissolved metals are retained in the lake with the highest concentration being found near the bottom. This occurs due to the lack of dissolved oxygen at the lower depths. The dissolved oxygen from wind and algae growth near the surface will oxidize some of the dissolved metals so that they precipitate. The length of detention time in the lake aids in the natural bacteria removal. The detention time also aids in the natural removal of suspended material or turbidity by sedimentation.

The quality of the water in lakes is affected by an occurrence known as "Turnover." This happens once or twice a year, generally in the springtime, as the water temperature of the lake begins to change. The density or "Specific Gravity" of the water changes as the water temperature changes. Water is heaviest or most dense at 4 degrees Centigrade or about 39 degrees Fahrenheit. In a deep lake the water at the bottom will always be about 4 degrees C because of its higher Specific Gravity. Stratification occurs as layers of water, at different temperatures, form in the lake. In the spring as ice on the surface melts, it becomes warmer (and heavier) and begins to sink. As this happens water at the bottom is forced to the surface. This mixing action stirs up silt and decaying organic material and as a result can cause serious taste and odor problems. In the late fall as water at the surface cools it also gets heavier and sinks to create the same situation. Changes in water temperature and density also affect chemical treatment and settling in surface water treatment plants.

The turbidity, temperature and pH of water taken from rivers may fluctuate on a daily, or sometimes on an hourly basis. Rainfall and run-off usually contribute to these changes. Changes in the quality can also result from waste discharged from upstream sources. Minerals do not accumulate in rivers as they do in lakes. Mainly, because any water that is not used is carried downstream rather than being retained as it is in a lake. Jar testing should be done when the raw water quality changes. A jar test will help the operations staff determine what adjustments must be made in the treatment process when these changes occur.

INTAKE STRUCTURES

The type and location of the intake structure in the surface supply will determine the kind of treatment necessary for production of potable water. Ordinances should be passed to protect the water around the intake structure. Boating, swimming, and fishing should be discouraged in the area of the intake. Floating buoys should be placed as markers around the intake structure.

The intake structure should be designed to prevent the structure from freezing in the winter. Proper screening of the intake is also required to protect pumps and valves from serious damage. Periodic maintenance should be performed to keep screens from clogging and clear of restrictions. In some systems this is accomplished by flushing or backwashing the screen with water pressure supplied by a backwash water line located within the structure. Water is forced through the screen, washing the debris away from the structure.

RIVER AND STREAM INTAKES

The most common type of intake in flowing water is a simple pipe extended into the water. This pipe or intake line feeds water to low service pumps usually located in a pump house on the bank. Provisions should be made to prevent floating material from clogging the intake screen. Intake screens should be small enough to prevent clogging and large enough to allow adequate intake flow. The intake line should be located perpendicular to the flow or at a forty-five degree angle downstream. Intake lines that are pointed directly downstream may experience problems during high flows. A low-pressure area will develop around the intake restricting the flow of water into the structure. The intake pipe should be elevated off the bottom to avoid heavy concentrations of sand, silt and dissolved minerals.

LAKE AND RESERVOIR INTAKES

Intakes in lakes and reservoirs are generally located in 15 feet or more of water to provide multiple intake levels. These inlets are usually located 4 to 6 feet from the surface and at 5 to 10 feet intervals depending on the depth of the water. This will allow the operations staff to select water from different levels in the lake and minimize treatment costs by obtaining the best quality raw water. Inlets should never be located near the bottom of the lake to avoid high concentrations of dissolved minerals and gases, turbidity, and tastes and odors. Inlets are controlled by gate valves and operated from the top of the intake structure. These gate valves should be operated periodically to keep the valve in good working order.

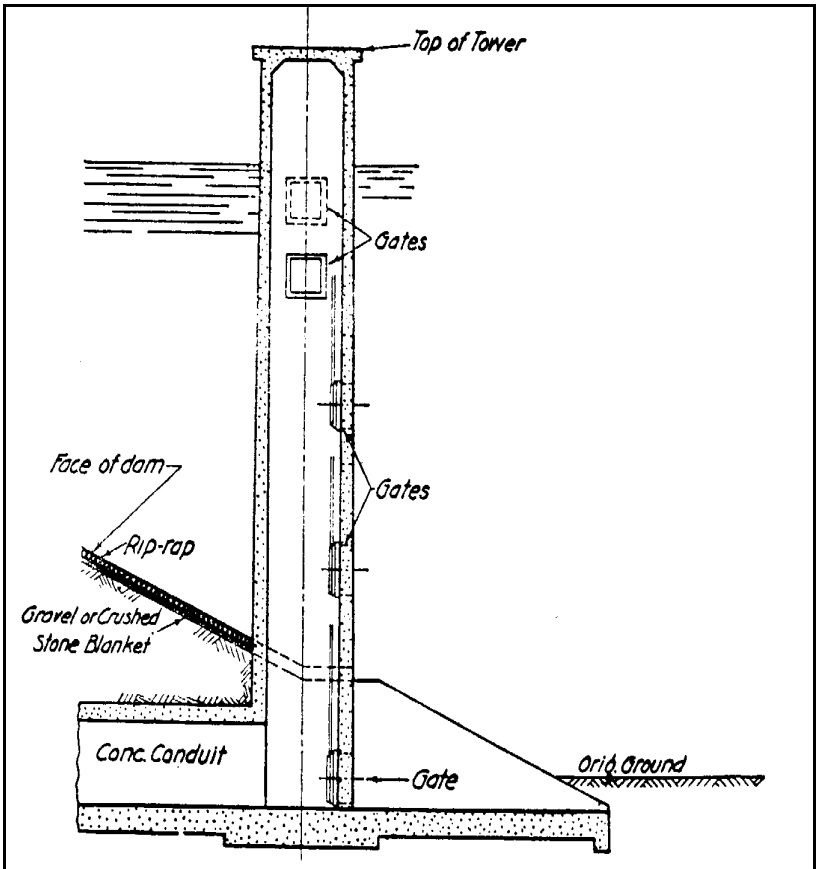

Lake Intake Structure

SURFACE WATER QUALITY

The type of treatment needed for surface water supplies depends on the contaminants present. These contaminants are grouped into five general categories: minerals, turbidity, bacteria, tastes and odors, and color. Before treatment processes can be discussed, the contaminants associated with each of these groups must be identified.

MINERALS

The mineral problems in water are caused by inorganic contaminants. These are usually dissolved metals and dissolved gases. Some of the more common mineral problems include iron and manganese, famous for causing "red water" problems, and hardness. Carbon dioxide gas can cause corrosion problems and hydrogen sulfide gas is noted for the "rotten egg" odor that is sometimes found in water. All of the inorganic chemicals are listed under the SDWA Primary and Secondary standards are also included in this category.

TURBIDITY

Silt and clay are primarily responsible for the turbidity in water. However, any suspended material that will not readily settle is considered to be turbidity. Some clay particles care so small that they will not settle at all. These particles in suspension are known as "colloids." Most turbidity particles carry a slight negative electrical charge that causes them to repel each other. Zeta Potential is the term used to identify this electro-chemical repulsion. The treatment to remove these particles must neutralize these charges and bring them together until a particle is formed that is large enough to settle.

BACTERIA

Bacteriological contamination has been covered in a previous chapter. It should be noted at this time that the presence of turbidity in the water could affect the disinfection process. A clump of turbidity can "hide" bacteria. This greatly reduces the effectiveness of the disinfectant and is the main reason turbidity is a primary contaminant in the SDWA. The possible presence of *Giardia* or *Cryptosporidium* can affect treatment strategies due to the need for higher free residuals and extended contact times.

TASTES AND ODORS

The main source of taste and odor problems in surface supplies is algae (small floating water plants). These are organic compounds that impart a mossy or fishy odor. The most common source of taste and odors in ground water supplies are inorganic chemicals. Hydrogen sulfide gas (H_2S) causes a "rotten egg" odor. Iron and manganese can also impart a rusty taste to the water when present. Tastes and odors are less noticeable when the water temperature is colder.

COLOR

Organic compounds released into the water by decaying vegetation cause true color. These organic "dyes" are dissolved in the water and cannot be removed by filtration like turbidity. As leaves fall into the water, tannic acid is leached out giving the water a brownish color. Decaying aquatic plants or humus can create a green color in the water. Apparent color is caused by small particles of oxidized iron or manganese that create red or black water problems respectively. This type of "color" is actually small red flakes of rust that can be removed by filtration.

REFERENCES

SACRAMENTO, *WATER TREATMENT PLANT OPERATION*, 4TH ED., 1999, VOL. 1, CHAPTER 2
SACRAMENTO, *WATER TREATMENT PLANT OPERATION*, 4TH ED., 1999, VOL. 1, CHAPTER 3

SOLUBILITY OF SALTS

Most methods of chemical treatment rely on the solubility of different salts to remove undesirable minerals from the water. A salt is formed when a metal combines with a non-metal. For instance, when a metal like sodium combines with a non-metal like chlorine, sodium chloride, NaCl, or table salt is formed. The most common metals and non-metals that combine to form soluble salts in drinking water supplies include:

CHEMICAL NAMES AND SYMBOLS

METALS	NON-METALS
Calcium – Ca	Carbonate – CO_3
Magnesium - Mg	Bicarbonate - HCO_3
Manganese – Mn	Hydroxide – OH
Iron – Fe	Sulphate - SO_4
Aluminum – Al	Chloride – Cl
Sodium – Na	
Copper - Cu	

CHEMICAL COMPOUNDS	
Calcium carbonate -	$CaCO_3$
Magnesium hydroxide -	$Mg(OH)_2$
Aluminum sulphate -	$Al_2(SO_4)_3$
Ferric (iron) chloride -	$FeC1_3$
Copper Sulphate -	$Cu\ SO_4$

Some salts dissolve very readily in water while others may not dissolve at all. Those that do not dissolve in water are known as insoluble salts. For instance, alum (aluminum sulphate) will dissolve in water but aluminum hydroxide, $Al(OH)_3$, is insoluble in water. Calcium bicarbonate, $Ca(HCO_3)_2$, is very soluble but calcium carbonate, $CaCO_3$ will not dissolve once the pH reaches 9.0-9.5.

Many of the undesirable minerals in water are present in the form of soluble salts. By adding certain other chemicals and adjusting the pH of the water, chemical reactions will take place that will change those soluble salts into insoluble salts. These insoluble salts can then be removed by either sedimentation or filtration.

COMMON NAMES FOR WATER TREATMENT CHEMICALS

There are a number of water treatment chemicals that are better known by their common names than their chemical names.

Chemical Name	Chemical Symbol	Common Name
Aluminum Sulphate	$Al_2(SO_4)_3$	Alum
Calcium Hydroxide	$Ca(OH)_2$	Lime
Sodium Hydroxide	NaOH	Caustic Soda
Sodium Carbonate	Na_2CO_3	Soda Ash
Ferrous Sulphate	$FeSO_4$	Copperas

pH

The pH of the water is the measurement of the acidity or alkalinity of the water. Water is considered to be acid when it has more hydrogen ions (H^+) in it than hydroxide ions (OH^-). Some of the chemicals that add hydrogen ions (H^+) to the water are hydrochloric acid, HCl, sulfuric acid, H_2SO_4, nitric acid, HNO_3, and carbonic acid, $H_2 CO_3$,

Water is considered to be alkaline when there are more hydroxide ions (OH^-) present than hydrogen (H^+) Sodium hydroxide, NaOH, calcium hydroxide, $Ca(OH)_2$, and magnesium hydroxide, $Mg(OH)_2$, all add hydroxide ions (OH^-) to the water. When the number of hydrogen ions and hydroxide ions are the same the water has a neutral pH. Pure water, H_20 or H-OH, has a neutral pH because the number of hydrogen ions (H^+) and hydroxide ions (OH^-) are equal.

pH SCALE

0 1 2 3 4 5 6 7 8 9 10 11 12 13 14

^

More Acid Neutral More Alkaline

The pH of water is measured on a scale that reads from 0 to 14. The midpoint of the scale is 7. Water with a pH of 7 is neutral. If the water has a pH less than 7, the water is acid and if the pH is greater than 7 it is alkaline. For every whole number that the pH changes the strength of the acid or alkaline properties of the water will change by a factor of ten times. Water that goes from a pH of 9 to a pH of 10 becomes 10 times more alkaline and water at pH of 5 is 10 times more acid than water at a pH of 6.

PHYSICAL/CHEMICAL TREATMENT

The purpose of chemical treatment is to remove any undesirable contaminants and produce water that is safe and acceptable to consumers. Removing undesirable impurities, using conventional treatment, requires the use of various treatment processes including Pretreatment, Coagulation, Flocculation, Sedimentation, and Filtration.

Pretreatment refers to treatment of the raw water before it enters the treatment plant. It usually occurs at the raw water intake and involves some type of chemical addition with no physical treatment other than mixing. Chemicals used in pre-treatment include oxidizing agents for color or tastes and odors, activated carbon for tastes and odors, and aeration for iron or hydrogen sulphide gas.

Coagulation is the chemical reaction that changes soluble salts into insoluble salts**.** This is accomplished by adding certain chemicals, known as coagulants, to the raw water. Coagulant aids are used to adjust pH and help in the formation of insoluble salts. These salts are referred to as floc. The formation of floc is accomplished by the even and thorough dispersal of the coagulant in the raw water by "rapid" or "flash" mixing. Changes in water quality or water temperature can have an adverse affect on the coagulation process.

Flocculation is the process that follows the rapid mix. The velocity of the water is reduced and a gentle mixing action is created to allow the formation of insoluble salts, clay, and other suspended matter into floc particles. The negatively charged colloids are attracted to a positively charged coagulant and begin colliding to form a large neutral floc particle that will settle out during the sedimentation process. This process of bringing positive and negative charged particles together to form a floc that has a neutral charge, and is large enough to settle is called agglomeration.

A flocculation tank will usually incorporate baffles or mechanically driven paddles for mixing. It is important to keep the velocity of the water slow enough to prevent "hydraulic shear" This will prevent the floc particles from breaking up before they reach the sedimentation tank. One of the more common problems occurring in flocculation basins is formation of pin floc. Underfeeding or overfeeding the coagulant chemicals usually causes pin floc. Pin floc can also be a problem when the raw water has a low turbidity or cold temperature. The addition of coagulant aids such as bentonite clay, activated silica, and polymers can improve the flocculation process.

Sedimentation is the process of slowing the water velocity to allow the floc to settle out. Clear water is then drawn off the top of the basin for filtration. Sedimentation basins are usually the largest tanks in the treatment process. These basins should have baffles placed in them to prevent "short-circuiting." Baffles are usually made out of wood or metal and used as an obstruction to the normal flow of water. Short-circuiting is a condition caused by allowing the influent to flow straight across the basin to the effluent weir in less time than it would take if the flow were distributed evenly across the tank.

In circular basins the flow is directed down and in rectangular basins it is spread evenly across the influent end of the tank. As the water flows through the basin, the floc settles to the bottom forming a sludge blanket. Sludge is removed by means of a raking device that pushes the sludge to the center of circular basins or the end of rectangular basins where it is pumped out of the tank. Bulking occurs when sludge is not removed from the process often enough. This is a result of decomposition of organics in the sludge that causes gases to form and sludge to float to the surface. This decomposition can also create taste and odor problems.

Filtration is the final step in the removal of chemical impurities in water. Any organic or inorganic particles that have not been removed during the sedimentation process must be filtered out in order to meet the SDWA standards of 1.0 NTU or less in the finished water. The turbidity of the water in the filter influent should not exceed 15 NTU's, and should actually be less than 5 NTU's, or filter runs will be reduced dramatically. When the filter becomes dirty it must be backwashed. Since the backwash water is treated potable water, the length of the filter run directly impacts the cost of the filter operation. The backwash water must either be returned to the head of the plant or mixed with the raw water flow or impounded so that sludge can be separated.

REFERENCES

SACRAMENTO, *WATER TREATMENT PLANT OPERATION*, 4TH ED., 1999, VOL. 1, CHAPTER 1
SACRAMENTO, *WATER TREATMENT PLANT OPERATION*, 4TH ED., 1999, VOL. 1, CHAPTER 4
SACRAMENTO, *WATER TREATMENT PLANT OPERATION*, 4TH ED., 1999, VOL. 1, CHAPTER 9
SACRAMENTO, *WATER TREATMENT PLANT OPERATION*, 3RD ED., 1999, VOL. 2, CHAPTER 1

REMOVAL OF COLOR

The dissolved organic compounds that cause true color in water can be removed if the pH of the water is lowered to between 3.5 and 5.5. Under these acidic conditions, the color compounds become gelatin-like solids that will settle out in the sedimentation tanks. This pH adjustment can be accomplished by adding alum or acids. Most of the other treatment processes will require a pH of 6.5 to as high as 11.5. If color is to be removed, the pH must be lowered first. If the pH is raised, the color may become set (much the same way that hot water will set laundry stains) and will be nearly impossible to remove. Older treatment plants are usually not equipped to handle this type of treatment, however, some up-flow units can be adapted to remove color because alum can be added to lower the pH prior to raising the pH for other types of treatment.

Color can also be removed by oxidation. Chlorine is sometimes used to oxidize color compounds and remove them. However, this can result in the formation of Trihalomethanes or THM's and is not usually recommended. Other oxidizing agents such as ozone or potassium permanganate do a better job and do not create the THM byproducts associated with the use of chlorine.

REMOVAL OF BACTERIA

Pathogenic bacteria tend to die out in surface water supplies. Sedimentation and filtration can also remove about 90% of these bacteria. However, those that are not removed during the treatment must still be destroyed with oxidizing agents. The possible presence of *Giardia* in surface waters is the main reason that filtration is now mandatory for all surface supplies. Higher chlorine residuals may also be necessary to meet the new C x T standards for *Giardia*. Using ozone as a disinfectant can reduce the difficulties created by the increased contact time needed to kill Giardia. Chlorination may still be required to meet secondary contamination considerations.

REMOVAL OF TASTE AND ODORS

Taste and odors in water can come from several sources. Both organic and inorganic compounds can cause tastes and odors. The most common source of organic taste and odors is algae. These algae can be divided into two main groups that are responsible for most of these problems. They are classified, according to their color, into green algae and blue-green algae. Green algae are usually responsible for grassy or musty odor in water while the blue-green algae cause rotten fish types of odors.

Algae problems develop during hot, dry weather in the early summer. Algae blooms will begin in shallow coves as the water temperature rises. These blooms spread so rapidly that, in a week or two, enough algae is present to cause serious taste and odor problems. Some blue-green algae release poisonous by-products that can result in fish kills in severe cases. Algae blooms can also result in pH fluctuations in the impoundment as the CO_2 uptake increases during the daylight hours driving the pH higher. Diatoms are another group of algae that may be present in surface waters. They do not cause the offensive odors that the blue-green algae do, but their shells tend to plug filters.

Tastes and odors can also be caused by inorganic compounds and dissolved gases. Iron and manganese can cause rusty tastes. Hydrogen sulphide gas can cause a rotten egg odor.

COPPER SULFATE TREATMENT

Algae in lakes and reservoirs can be killed with copper sulfate, $CuSO_4$. It usually requires dosages of about 0.5 to 1.0 mg/1 to kill most algae blooms. However, if the action is taken early in the spring before these algal blooms occur, dosages as low as 0.1 mg/l may be sufficient. Copper sulphate is most effective when it is applied to soft waters that have a low hardness and a high pH. Never add copper sulfate in dosages higher than 1.0 mg/l. Copper sulfate will kill many game fish at very low concentrations. Brown trout will not survive concentrations greater than 0.14 mg/l. Always contact state health officials before attempting this type of treatment.

IN-PLANT TREATMENT

There are three methods of removing taste and odors at the treatment plant. Activated carbon can be used to adsorb the organic compounds that cause the problem. A dosage of 15 to 25 mg/1 is usually required to accomplish this. In severe cases, dosages may need to be as high as 100 mg/1. Activated carbon should be added as far upstream as possible from the point where coagulant chemicals are added. If it is added at the same time as coagulant chemicals, it may become tied up in the floc particle before it has time to adsorb the organic taste and odor compounds. Activated carbon is very expensive and difficult to feed. It is also dangerous to handle because it can create an explosion if dispersed in the air and ignited.

The other method of taste and odor removal is by the addition of an oxidizing agent such as chlorine. The oxidizing agent will react with and chemically alter organic compounds so that they no longer cause taste and odors. The problem again is the creation of THM's as a byproduct of the chlorination process. The use of other oxidizing agents like chlorine dioxide or ozone should be considered instead of chlorine.

Tastes and odors caused by inorganic compounds like iron or hydrogen sulphide may be removed by aeration. Diffused air bubblers or stripping towers are the most common means of aeration. The dissolved oxygen will oxidize the iron and manganese and cause hydrogen sulfide to be forced out of the water. Removal of iron still requires some type of filtration to remove the oxidized rust particles that are formed. Use of aeration for treatment also has a drawback. In low pH waters dissolved oxygen can create serious corrosion problems in the system. Oxidizing agents can also be used to remove inorganic tastes and odors.

REFERENCES

SACRAMENTO, *WATER TREATMENT PLANT OPERATION*, 4TH ED, 1999, VOLUME 1, CHAPTER 3
SACRAMENTO, *WATER TREATMENT PLANT OPERATION*, 4TH ED, 1999, VOLUME 1, CHAPTER 9

REMOVAL OF TURBIDITY

Turbidity is removed during the treatment process by addition of coagulants and coagulant aids. Aluminum sulphate, $Al_2(SO_4)_3$, or alum, is the most widely used coagulant in the treatment of water. Its pH range is 5.0 to 7.0 and is most effective at 6.5. When the alum dissolves in water it reacts with the alkalinity present to form aluminum hydroxide, which is an insoluble salt. As the particles of aluminum hydroxide clump together the turbidity particles are attracted to and entrapped in the floc. This causes the pH to drop because the alkalinity is being removed from the water. Lime, $Ca(OH)_2$, is added to compensate for the drop in alkalinity and maintain the pH at 6.5. For every 2 mg/1 of alum added, about 1 mg/1 of lime must be added to replace the alkalinity removed by the reaction.

COMMON COAGULANT CHEMICALS

Aluminum Sulphate	$Al_2(SO_4)_3$
Ferric Sulfate	$Fe_2(SO_4)_3$
Ferrous Sulfate	$FeSO_4$
Ferric Chloride	$FeCl_3$
Sodium Aluminate	$NaAlO_3$

These chemicals work as coagulants because the iron and aluminum ions are large and have a high positive charge needed to attract the negatively charged turbidity particles. Alum is used most often because it is the least expensive coagulant. The other coagulants are used because they will form floc over a wider pH range. Sodium aluminate will work at any pH. However, adjusting the pH with lime and using alum is usually the most economical choice. It should be noted that all of the coagulant chemicals will precipitate as ferric hydroxide or aluminum hydroxide and will remove alkalinity from the water. Treating water with low turbidity may present problems in forming a floc particle that is heavy enough to settle out. In some cases a weighting agent must be added such as activated silica or bentonite clay.

The use of polymers as coagulant aids has become more common in surface supplies that have relatively low turbidities. They are organic compounds that can be positively charged, negatively charged, or carry a neutral charge. When mixed with water, polymers form long jelly -like chains that entrap floc particles allowing more rapid settling. Polymers are usually added before the coagulant in the coagulation process. Polymers that are positively charged are called cationic polymers and those that are negatively charged are called anionic polymers. Cationic polymers are most commonly used in surface water treatment to attract negatively charged turbidity particles. Polymers in their concentrated form are coiled like a spring. They must be diluted in water and allowed to “unwind” before they will work effectively in the flocculation process. This usually takes 40-60 minutes after mixing.

REMOVAL OF MINERALS

Mineral problems can be grouped into two major categories. These are problems related to hardness and problems related to other metals and gasses not associated with hardness such as iron, manganese, hydrogen sulfide, ammonia, and carbon dioxide.

HARDNESS

Metals that are dissolved in water cause hardness. Calcium (Ca) and Magnesium (Mg) are the two metals that dissolve the most easily in water. They are considered to be the main cause of hardness. Other metals also cause hardness in water but very few are soluble enough to contribute to hardness problems. The two metals that do not cause hardness in water are (Na) sodium and (K) potassium. Water with hardness of 0-60 mg/1 is considered to be soft water. Moderately hard water is considered to be between 60-120 mg/1, while very hard water has hardness of 150 mg/1 and up.

Hardness causing compounds are broken into two groups; carbonate hardness and non-carbonate hardness. Carbonate hardness is hardness that can be removed by boiling water. Non-carbonate hardness cannot be removed by boiling water. Carbonate and non-carbonate hardness are both a result of dissolved calcium and magnesium in water. It is the non-metals that combine with the calcium and magnesium that will determine whether it is carbonate or non-carbonate hardness.

HARDNESS COMPOUNDS

Carbonate		Non-Carbonate	
Calcium carbonate	$CaCO_3$	Calcium sulfate	$CaSO_4$
Magnesium carbonate	$MgCO_3$	Magnesium sulfate	$MgSO_4$
Calcium bicarbonate	$Ca(HCO_3)_2$	Calcium chloride	$CaCl_2$
Magnesium bicarbonate	$Mg(HCO_3)_2$	Magnesium chloride	$MgC1_2$
Calcium hydroxide	$Ca(OH)_2$		
Magnesium hydroxide	$Mg(OH)_2$		

Carbonate hardness is formed when calcium or magnesium combines with a form of alkalinity (carbonate, bicarbonates, or hydroxides.) Non-carbonate hardness is formed when calcium and magnesium combine with anything other than alkalinity. Chlorides and sulfates are the two most common forms of non-carbonate hardness.

SOFTENING CHEMICAL REACTIONS

Carbonate hardness is removed by adding lime, $Ca(OH)_2$, to the water. The lime softening process requires the addition of enough lime to raise the pH to a point where the reaction can take place. The pH must be between 9.0 - 10.5 to remove carbonate hardness. Calcium compounds are removed at a pH of 9.0-9.5. Magnesium compounds require a pH of 10.0-10.5.

The reaction between lime and calcium bicarbonate results in the formation of calcium carbonate and water. At the proper pH calcium carbonate has a solubility of about 40 mg/l. The rest of the calcium will settle out as a floc.

Calcium bicarbonate + Calcium hydroxide > Calcium carbonate + Water

$$\mathbf{Ca(HCO_3)_2 + Ca(OH)_2 > 2\,CaCO_3 + 2\,H_2O}$$

Magnesium hydroxide is the least soluble of the magnesium compounds. First magnesium bicarbonate reacts with lime to create magnesium carbonate and calcium carbonate. The calcium carbonate precipitates out and then the magnesium carbonate reacts with lime to create calcium carbonate and magnesium hydroxide that will both precipitate out.

Magnesium bicarbonate + Calcium hydroxide > Calcium carbonate + Magnesium carbonate + Water

$$\mathbf{Mg(HCO_3)_2 + Ca(OH)_2 > CaCO_3 + MgCO_3 + 2H_2O}$$

Magnesium Carbonate + Calcium Hydroxide > Calcium carbonate + magnesium hydroxide

$$\mathbf{MgCO_3 + Ca(OH)_2 > CaCO_3 + Mg(OH)_2}$$

Non-carbonate or permanent hardness can be removed by the addition of sodium carbonate or soda ash, Na_2CO_3. Lime is usually added to adjust the pH of the raw water. This lime-soda ash process requires a pH of 10.0-10.5 to remove calcium compounds and a pH of 11.0 - 11.5 to remove magnesium compounds. When the proper pH conditions are met, the reaction between the sodium carbonate and the calcium sulphate results in the formation of sodium sulfate and calcium carbonate. The reaction is basically same for calcium chloride, except sodium chloride is created instead of sodium sulphate. The sodium does not cause hardness and the calcium carbonate that is insoluble will settle out. Magnesium compounds react directly with lime to precipitate as magnesium hydroxide. This results in the formation of calcium chloride or sulphate with must then react with soda ash to form calcium carbonate.

Calcium sulphate + Soda ash > Calcium carbonate + Sodium sulphate

$$\mathbf{CaSO_4 + Na_2CO_3 > CaCO_3 + Na_2SO_4}$$

Magnesium sulphate + Calcium hydroxide > Magnesium hydroxide + Calcium sulphate

$$\mathbf{MgSO_4 + Ca(OH)_2 > Mg(OH)_2 + CaSO_4}$$

RECARBONATION

After non-carbonate softening has taken place, the finished water will likely have pH of 10-11. This is a result of the lime addition that was needed to drive the softening reaction. If this water is pumped to distribution at this pH, the excess lime will cause calcium deposits in pipes and fixtures.

Recarbonation is the process of stabilizing the water by lowering the pH and precipitating the excess lime as calcium carbonate. In large systems the amount of lime needed may make reclamation of the lime from the calcium carbonate sludge feasible. The sludge is heated in a furnace. The heat causes calcium carbonate to breakdown and calcium oxide, CaO, and carbon dioxide gas, CO_2, are the result. The calcium oxide is "slaked" with water to form calcium hydroxide that is then reused in the softening process. The carbon dioxide gas is then used to react with the excess lime to lower the pH and precipitate more calcium carbonate. Recarbonation also requires additional coagulation, flocculation and sedimentation since it occurs after the initial softening process.

Calcium hydroxide + Carbon dioxide > Calcium carbonate + Water

$$\mathbf{Ca(OH)_2 \quad + \quad CO_2 \quad > \quad CaCO_3 \quad + \quad H_2O}$$

OTHER SOFTENING PROCESSES

Systems that do not have the clarification equipment necessary for this type of treatment may soften water using the zeolite process. This is called an ion exchange process. Water is passed through a filter containing zeolite granules. A reaction takes place that removes calcium and exchanges it with sodium. The hardness can be lowered to 0 mg/1 this way, since sodium does not cause hardness. The sodium that is put in the water may cause problems for people on the system who have high blood pressure or heart trouble, especially those on a salt-free diet. When the zeolite bed becomes saturated with calcium it must be regenerated, by backwashing it with a saturated brine solution.

Reverse-osmosis (R-O) may also be used in cases where chemical equipment is not available. R-O is a process in which water, under pressure, is forced through a semi-permeable membrane (a distant cousin of the hot dog skin). The membrane will allow the water to pass through it but will trap the calcium, magnesium, and any other dissolved solids. The unit is periodically backwashed to clean the membrane. Electrodialysis may be used where water with very high concentrations of hardness (500+ mg/l) is found. Water is passed between two metal plates that are electrically charged. The reaction is similar to that used in a metal plating shop. All of the metals are attracted to the plate with the negative charge and the non-metals are attracted to the plate with the positive charge and are removed from the water. Both R-O and electrodialysis are very expensive from both an equipment and operation standpoint.

REFERENCES

SACRAMENTO, *WATER TREATMENT PLANT OPERATION*, 4TH ED., 1999, VOL. 1, CHAPTER 3
SACRAMENTO, *WATER TREATMENT PLANT OPERATION*, 3RD ED., 1999, VOL. 2, CHAPTER 14

IRON AND MANGANESE

Iron and manganese (Fe & Mn) can be found in reservoirs and lakes that are used for furnishing water to municipal systems. These minerals are also found in undesirable concentrations in waters from shallow wells or from wells drilled into shale or sandstone formations. The presence of large amounts of Fe and Mn can cause stains on plumbing fixtures, a rusty appearance and taste in the water (red water). Iron in excess of 0.3 mg/l will cause red water problems and manganese in excess of 0.05 mg/l will cause black water problems.

The least expensive means of controlling Fe and Mn in surface water supplies is to raise the raw water intake so that the water is taken from a point nearer the surface of the supply. This may reduce concentrations of Fe and Mn in the raw water because the concentrations of these minerals are normally higher at greater depths in the reservoir. The second alternative is to artificially supply dissolved oxygen by means of aeration. This can be accomplished by installing a small aeration tower prior to the coagulation process. Aeration may also be achieved by forcing air into the water with blowers. Either method can provide the dissolved oxygen necessary to oxidize the Fe and Mn so it will settle out in the sedimentation tanks. Aeration requires longer contact time than other forms of oxidation. If it is used in a direct filtration process, a holding tank may have to be added after aeration to allow time for the reactions to take place. The remaining three alternatives require the addition of chemicals.

Pre-chlorination, or the addition of chlorine to the water before it reaches the sedimentation tanks, is an effective means of removal. In this case the chlorine acts as the oxidizing agent to precipitate the Fe and Mn. To achieve satisfactory percentages of removal enough chlorine must be added to provide a one part per million residual at the point of filtration.

Another oxidizing agent that can be added to remove Fe and Mn is potassium permanganate, $KMnO_4$, it too should be added to prior to coagulation. Enough potassium permanganate should be added to give the water a slight pink color as it goes to the filters. This method may also be used along with pre-chlorination. Never add $KMnO_4$ to water when the pH is less than 7.2 or manganese may actually be added to the water.

The final method of control is the addition of a sequestering agent. Polyphosphates, including sodium hexametaphosphate, also known as Calgon, are the most common sequestering agent used. This should be done as far in advance of the sedimentation process as possible if this is used by itself. If it is used in a conventional treatment plant, it should be added after sedimentation and before filtration. Polyphosphates should be used in small dosages, usually less than 5 mg/l. If excessive amounts are added it will begin to soften rust deposits in the distribution system and cause them to break loose. When this happens, serious plugging of hydrants or services can occur. It should be noted that polyphosphates do not remove Fe and Mn, but they do surround or sequester these ions and keep them in solution rather than allowing them to be oxidized and precipitate in the distribution system. Over time the polyphosphates will break down and release the Fe and Mn. They will then oxidize and create the red or black water. The proper dosage is just enough to keep the iron or manganese tied up for 4 days.

DISSOLVED GASES

Carbon dioxide and hydrogen sulfide are the main causes of problems related to dissolved gases. Carbon dioxide will react with water to form carbonic acid and can create corrosive conditions in the water.

Carbon Dioxide + Water > Carbonic Acid

$$\mathbf{CO_2 + H_2O > H_2CO_3}$$

Carbon dioxide can be removed by aeration down to concentrations of 5 mg/1. Hydrogen sulphide can be completely removed by aeration. Lime may be added to further reduce the CO_2 concentration. The lime will react with the $C0_2$ and precipitate out as calcium carbonate.

Carbon Dioxide + Calcium Hydroxide > Calcium Carbonate + Water

$$\mathbf{CO_2 + Ca(OH)_2 > CaCO_3 + H_20}$$

OTHER MINERAL PROBLEMS

The inorganic primary contaminants listed in SDWA must also be removed if the MCL is exceeded. The addition of lime and alum or one of the iron-base coagulants such as ferric chloride or ferrous sulfate can remove most of these metals. A high pH is usually required to produce insoluble salts from these dissolved metals. Radioactive metals can also be removed in this manner. Ion exchange processes are also used to remove some non-metal contaminants. Activated alumina, AlO_3, can be used for arsenic and fluoride removal in a process that is similar to zeolite softening.

REFERENCES

SACRAMENTO, *WATER TREATMENT PLANT OPERATION*, 3RD ED., 1999, VOL. 2, CHAPTER 14
SACRAMENTO, *WATER TREATMENT PLANT OPERATION*, 4TH ED., 1999, VOL. 1, CHAPTER 8

CHEMICAL FEEDERS

Chemical feeders are necessary to assure that the proper amount of each chemical is added to the water on a continuous basis. Each feeder must have a storage bin, a device that feeds the chemical into a solution tank where it is dissolved, and a delivery system to add the chemical at the proper point in the treatment process. Chemical feeders are either volumetric or gravimetric. Volumetric feeders are the most common. They include auger feeders and positive displacement metering pumps.

The actual proportional feeding device may be a screw auger, a rotating disc, an oscillating shelf, or a variable speed conveyor belt. The feeder control may be calibrated in pounds per day but usually the scale simply reads from 1 to 10 or 1 to 100. The manufacturer may provide a chart that can be used to determine what the feed rate is a given setting. If not, the operator can calibrate the machine manually. This should be done periodically to determine if the machine is in need of cleaning or maintenance due to clogging or belt slippage. The first step is collecting and weighing the amount

of chemical fed in one minute at several different settings. These figures multiplied by 1,440 minutes per day will give pounds per day feed rate. These points can be plotted to create a straight-line graph that can be used to accurately set the feed rate.

Each chemical used in water treatment has specific safety considerations regarding its handling and storage. Operators should be aware of the potential hazards always use appropriate personal safety equipment when handling these chemicals or working around feed equipment. Respiratory protection is always appropriate when handling any dry chemicals. Activated carbon dust can be explosive and wet activated carbon can deplete the atmosphere of oxygen. Alum and polymers become very slippery when wet. The ferric and ferrous salts are very corrosive. Oxidizing agents are also very corrosive. Chlorine gas is also toxic and any chlorine product, including HTH and bleach, will react violently with organic compounds and react with acids to release chlorine gas. Always dilute acids and bases very carefully. These chemicals should always be added to the water when diluting them because of the heat that is generated by the reactions that take place. Always check the Material Safety Data Sheet (MSDS) if there are any questions regarding handling or use of any chemicals. These may be obtained directly from the chemical supplier or manufacturer.

PRETREATMENT EQUIPMENT

Pretreatment equipment usually refers to chemical feeders and in-line mixers that are used prior to coagulation when oxidizing agents or activated carbon are being used for taste and odor removal. Air stripping towers or other aeration equipment would also be included in this category. Other reasons for pre-treatment might include disinfection as pretreatment to maximize contact time for *Giardia* removal or pH adjustment for color removal. Mixing can be accomplished using mechanical mixers, static in-line mixers, or simply injection at the suction side of the raw water pump, using the pump as a mixer. Pretreatment should occur as far upstream from the treatment as possible in order to maximize the contact time prior to coagulation.

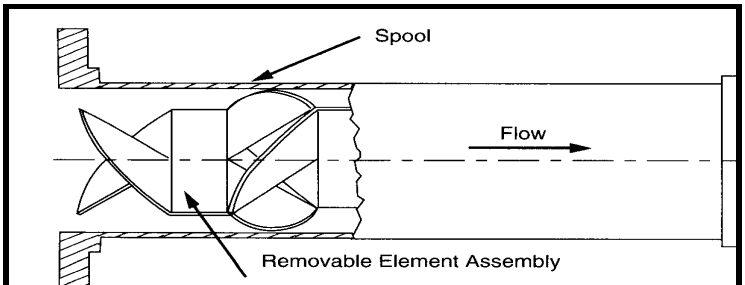

Static In-Line Mixer

COAGULATION EQUIPMENT

The coagulation process, or rapid/flash mix, is most often accomplished using mechanical mixers in a tank that has a detention time of 1-3 minutes. Mixing velocities should be between 5-7 ft/sec. The tank may be dual-chambered. This design allows the coagulant aids to be added first. The raw water should have the proper pH and alkalinity, and have other aids like polymers or bentonite clay present before the flow enters the mixer chamber. In-line mixers may also be used for coagulation and flash mixing. In either case, it is important to add the coagulant aid far enough upstream that the

pH adjustment occurs before the coagulant is added. The raw water should be tested for pH, alkalinity, turbidity, temperature, tastes and odors, and color. If softening is an issue, hardness tests should also be run. pH should also be checked after coagulation.

Jar tests should run on the raw water to determine the optimum coagulant dosage. The amount of coagulant needed for good floc formation can be affected by changes in the raw water quality. Raw water should be checked for turbidity, pH, alkalinity, temperature, color, and tastes and odors. Floc does not form as well or as fast in colder temperatures requiring higher coagulant doses. Changes in pH will change the amount of coagulant aid needed. Changes in turbidity will have an effect on the amount of coagulant required. Higher turbidities do not necessarily mean more coagulant will be used. Because there are more particles available in highly turbid water, it may actually require less coagulant to form a good floc particle. In fact, waters with very low turbidities may require the addition of a coagulant aid, like bentonite clay or activated silica that increases the turbidity in order to produce a better floc particle.

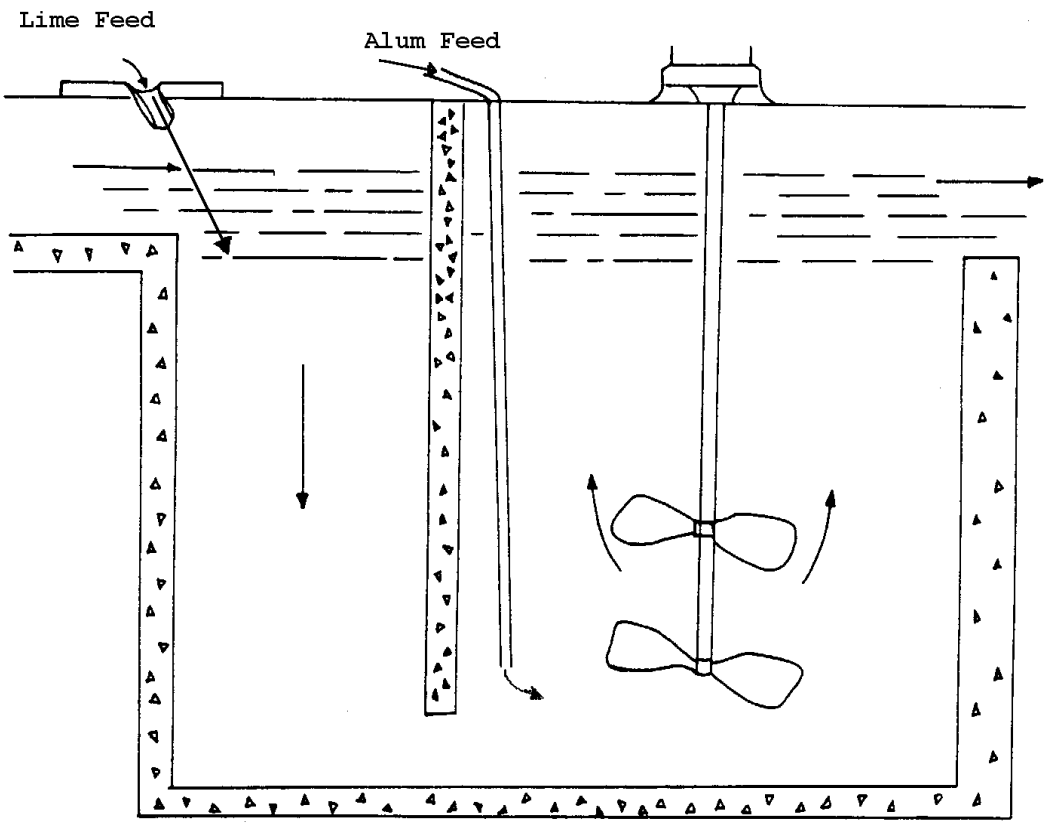

Dual Compartment Rapid Mix

FLOCCULATION EQUIPMENT

The flocculation process takes place in a much larger basin. The average detention time is 30-60 minutes. Changes in temperature can necessitate longer detention times because floc formation takes longer in colder water. The velocities in the flocculation basin should be about 1 ft/sec. This velocity will provide the maximum particle collision rate without causing hydraulic shear. If the velocity drops below 1 ft/sec, settling may occur in the corners of the basin. The proper velocity is maintained by means of mechanical mixers. It is important to have the ability to adjust the mixer speed to compensate for changes in flow and temperature that can impact floc formation. The flocculation effluent should be checked visually prior to sedimentation.

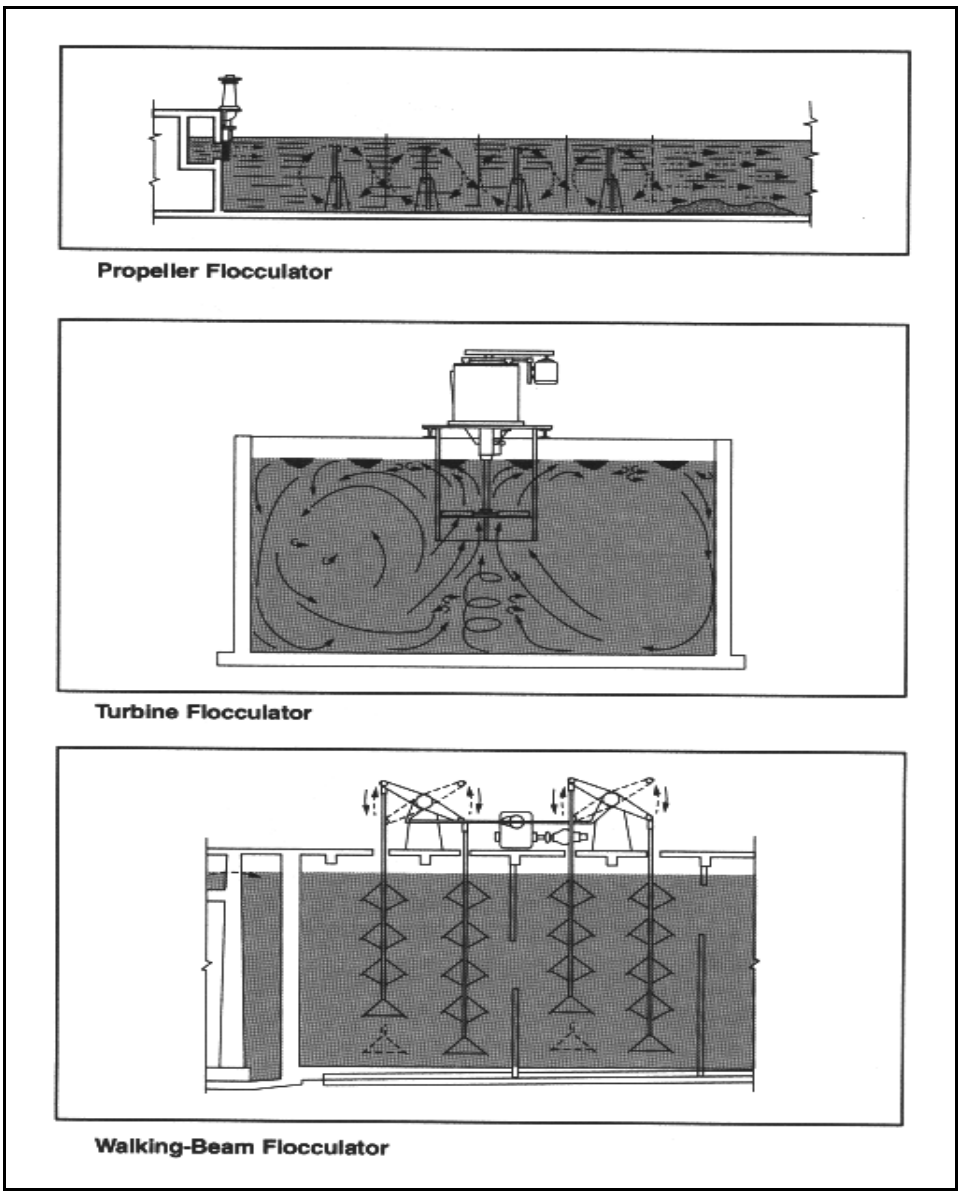

REFERENCES

SACRAMENTO, *WATER TREATMENT PLANT OPERATION*, 4TH ED, 1999, VOL. 1, CHAPTER 4

SEDIMENTATION EQUIPMENT

Conventional treatment plants will use either rectangular or circular sedimentation basins. Every sedimentation basin can be divided into four zones:

The **Influent Zone** is inlet to the sedimentation basin. Water enters the end of a rectangular tank and the center of a circular or square tank. The influent zone will be equipped with a baffle. Circular tanks will have a collar-type circular baffle that directs the water down as it enters the center of the tank. Rectangular tanks will have a perforated wall that spreads the water laterally across the inlet end of the tank. The purpose of the baffle is to prevent short-circuiting. Short-circuiting reduces the detention time in the tank causing floc to carry over onto the filters and causes uneven distribution sludge

The **Settling Zone** represents the largest portion of the tank. The water velocity is reduced to 0.01-0.03 ft/sec and the detention time is 4-6 hours. Slowing the water down for this long allows the sludge to settle to the bottom while the water is removed from the top of the tank. Sedimentation tanks are usually only about 8-12 feet deep and have a surface loading rate of about 800 gpd/sq.ft. This keeps the upward velocity of the water low enough to minimize floc carryover. A tank that is 20' x 50' (1000 sq.ft.) and designed with a surface loading rate of 800 gpd/sq.ft. would have a maximum design flow of 800,000 gallons/day. Tube settlers are sometimes used in sedimentation basins to improve settling rates.

The **Effluent Zone** is the part of the tank where the settled water leaves to go to the filters. In rectangular tanks the water leaves at the end opposite the influent. In circular or square tanks the water leaves at the edge of the tank. A channel called the effluent launder collects the effluent flow and directs it to the effluent piping. Weirs are installed along the edge of the effluent launder channel to skim the water evenly off the surface of the tank. The most common type of weir is a V-notch weir. A V-notch weir is a plate the has V-notches, that are about 2-3 inches deep, cut in it every 8-12 inches. If the weir is clean and level, it will remove water evenly all the way around the edge of the tank. This minimizes the upward velocities near the effluent launder to reduce floc carryover. If the weir plate is not level or part of the weir becomes clogged with algae or chemical scale, short-circuiting will result because more water will pass over the low, clean side of the weir. The result will be poor settling and uneven sludge blanket buildup. A baffle plate, in the form of a ring 6-8 inches inside the weir, may also be installed to prevent floating solids from going over the weir. The design criterion for weirs is the weir overflow rate. The weir overflow rate determines how many gallons can pass over each foot of weir each day. The standard weir overflow rate is between 10,000-14,000 gpd/ft. Our basin with a design flow of 800,000 gpd would require about 57 feet of weir to maintain a 14,000 gpd/ft weir overflow rate (800,000gpd/14,000gpd/ft = 57.15ft).

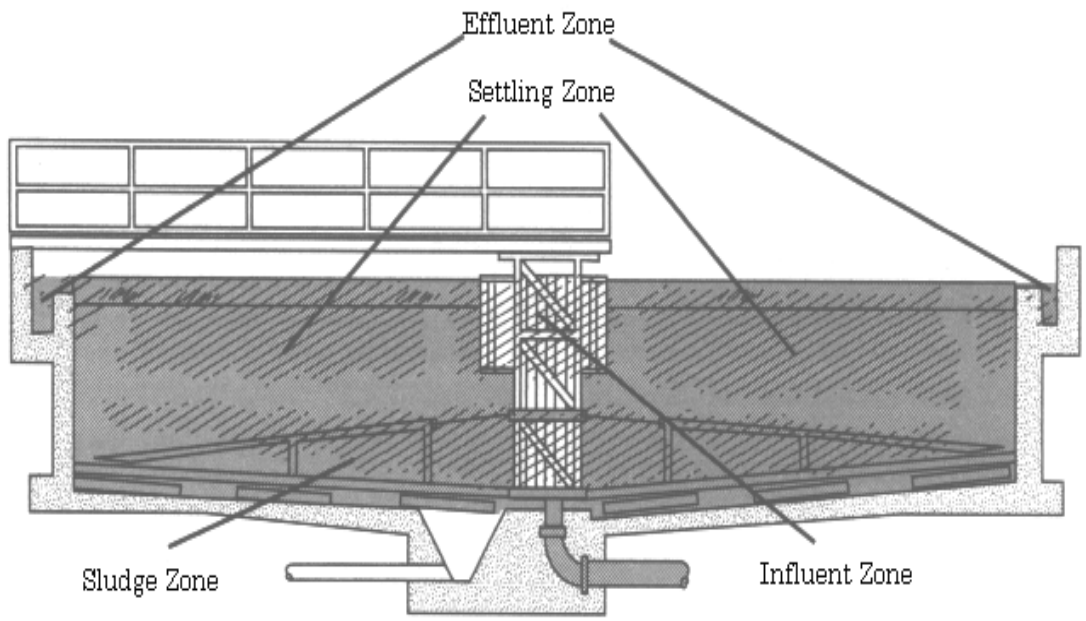

FOUR ZONES OF A SEDIMENTATION BASIN

The **Sludge Zone** is the bottom of the tank where the settled sludge collects. Sludge blanket depth should be measured periodically and sludge should be removed every shift or at least once a day. Sludge rakes push the sludge to one end or the center of the tank so that it can be pumped out. The rake drive is usually equipped with a torque indicator. The torque indicator resembles the indicator on a torque wrench. A needle moves across a graduated scale that indicates how much force is needed to move the rake through the sludge. If too much torque is applied, a shear pin in the drive shaft will break to prevent damage to the gearbox or drive shaft. A fluctuating torque reading indicates uneven sludge buildup in the sludge zone. Short-circuiting in the tank usually causes this. Failure to remove sludge often enough will result in bulking. The sludge can become septic and float to the top where it can be difficult to remove. It can also result in taste and odor problems.

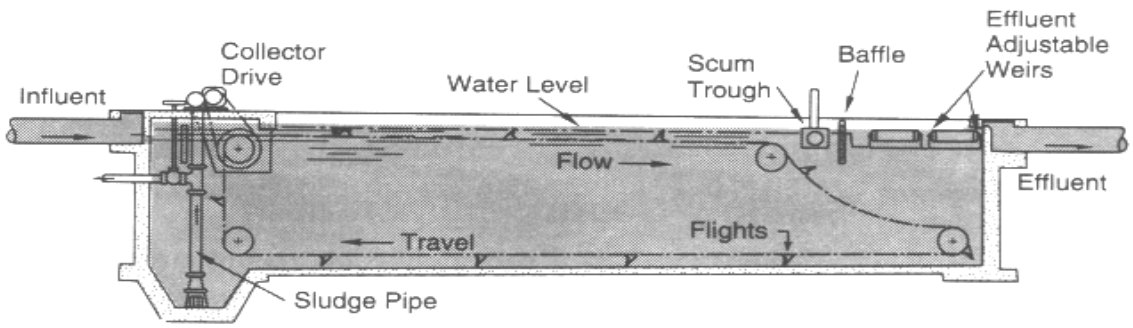

Rectangular Sedimentation Basin

Courtesy of FMC Corporation, MHS Division

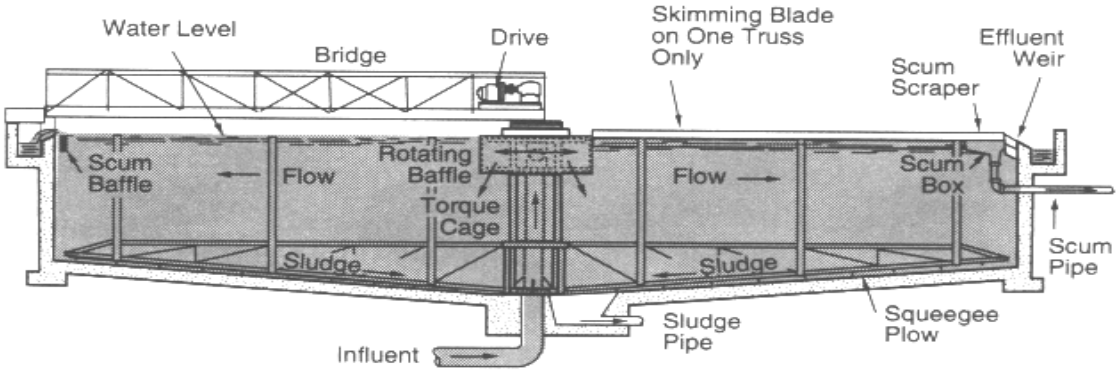

Circular Sedimentation Basin

UP-FLOW CLARIFIERS

Many new plants use up-flow or solids-contact type clarification equipment instead of conventional equipment. Up-flow clarifiers combine coagulation, flocculation, and sedimentation all in one unit. This can save money because less space is needed and the cost of the construction is less. One type of up-flow unit utilizes a sludge blanket that the water must pass through as it leaves the tank. The influent enters the center of the tank where chemicals are added and mixed by an impeller. The water flows downward and out under the hood that is in the center of the tank as the hood widens at the bottom, the velocities are reduced and flocculation begins. The floc is just starting to form as water passes up through the sludge blanket. The sludge blanket filters out the floc particles as the clarified water leaves the unit. Since the floc does not have to get big enough to settle, and the sludge blanket filters it, true settling is not required. The detention times in these units can be as little as 2 hours. This means that a much smaller tank can be used and because there is no need for separate coagulation and flocculation basins installation costs for these types of processes is much lower than conventional treatment.

Process control is accomplished by adjusting the turbine or mixer speed and regulating the sludge blanket density. The mixer supplies the energy for mixing, flocculation and sludge blanket suspension. Adjustments that are made to compensate for flow or temperature changes must be very gradual. The adjustment should not exceed 2-3% at a time. The sludge blanket is monitored by drawing sludge samples and spinning them in a centrifuge. Chemical sludges should be maintained between 12-18% by volume in the centrifuged sample. Once an optimum range has been determined, sludge removal should occur as often as needed to maintain that particular density.

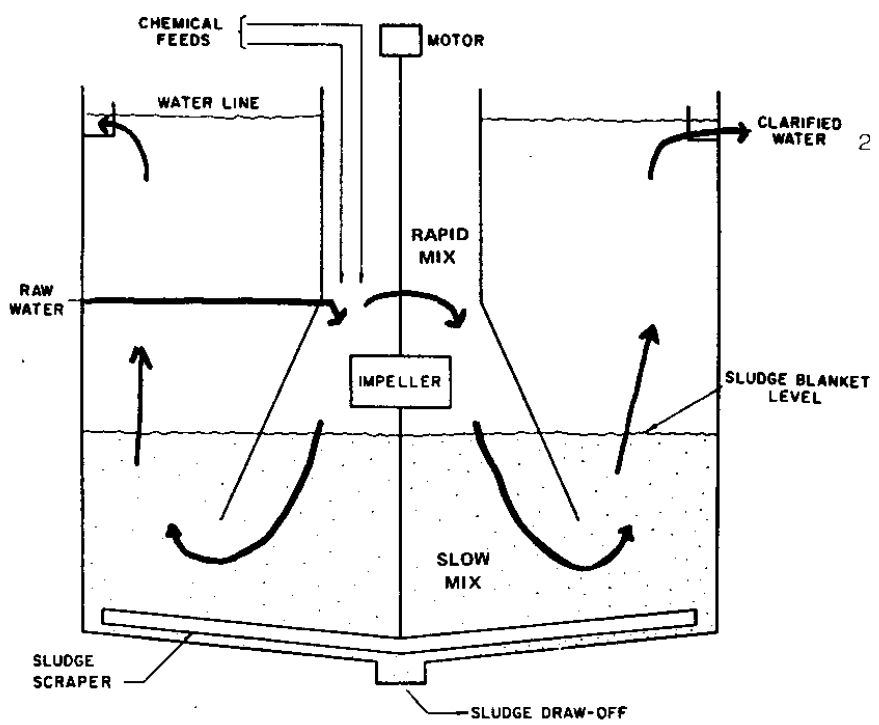

Up-Flow Clarifier

REFERENCES

SACRAMENTO, *WATER TREATMENT PLANT OPERATION*, 4TH ED, 1999, VOL. 1, CHAPTER 5

FILTRATION EQUIPMENT

Filtration is can be accomplished using either pressure or gravity filters. Pressure filters are more common in swimming pools and small systems while large systems will probably have one of the three types of gravity filtration. Gravity filters can be slow sand filters, rapid sand filters, or high rate filters. Filtration normally follows sedimentation in surface water treatment. Direct filtration refers to filtration without sedimentation, and is only effective when raw waters have very low turbidity.

PRESSURE FILTERS

Pressure filters operate under the same principles as gravity filters except the influent is forced through the filter under pressure. Pressure filters are steel cylinders that use sand or other media to remove particulates. They must be backwashed when the media gets clogged with solids. This is usually accomplished by manually operating the filter valves to reverse the flow through the filter bed. Pressure filters have about the same filter rate as gravity filters with the same type of media. Diatomaceous earth is another type of media that may be used instead of sand in some pressure filters.

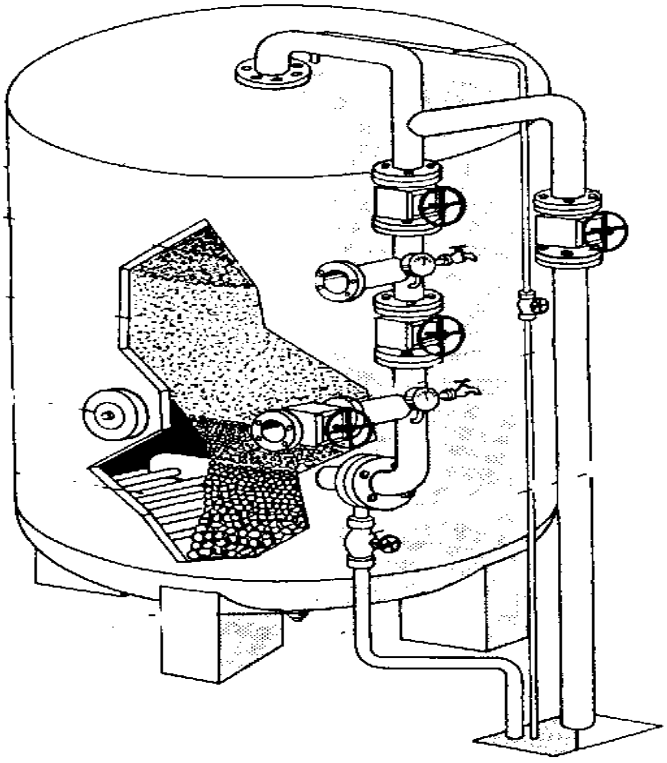

Pressure Filter

SLOW SAND FILTERS

Slow sand filters were the first type of gravity filter used for water treatment. They consist of a box and underdrain that is filled with about 3.5 ft. of filter sand. Suspended material collects on the surface of the filter bed and forms a layer known as a smutzdecke. When the filter gets clogged it is taken out of service and cleaned by scraping the top inch of sand off of the filter bed. This material must be replaced after several cleanings to restore the original media depth. After a filter is cleaned, it must be filtered to waste for several days before it can be put back in service. Because of this, a system must have two filters to provide continuous service. The filtration rate of a typical slow sand filter is about 0.05-0.15 gpm/sq.ft.

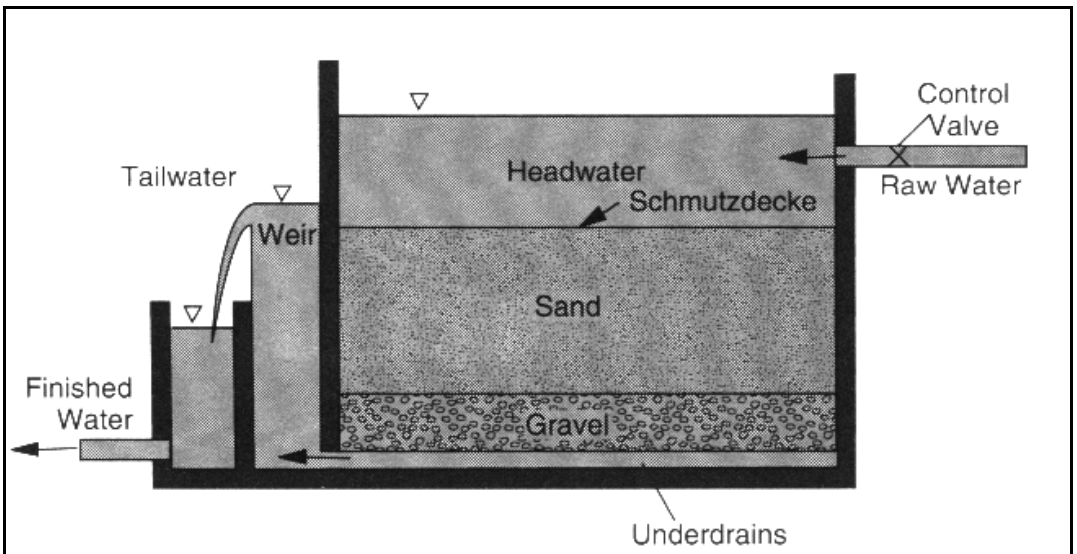

SLOW SAND FILTER

RAPID SAND FILTERS

Conventional rapid sand and mixed media filters have many design similarities. The basic components of the filters include all of the components described below. The main differences will be in the type of media that is used and the valving configurations.

Filter boxes may be constructed as rectangles, squares, round, or as the outer segment of a ring. A filter box is approximately ten feet deep, though its surface dimensions may vary depending on the volume of water to be filtered.

The **underdrain** serves three basic functions. Although it supports the filter media and collects the filtered water, its most important function is to evenly distribute the backwash water throughout the filter. Leopold tile and Wheeler blocks are two popular types of underdrain systems

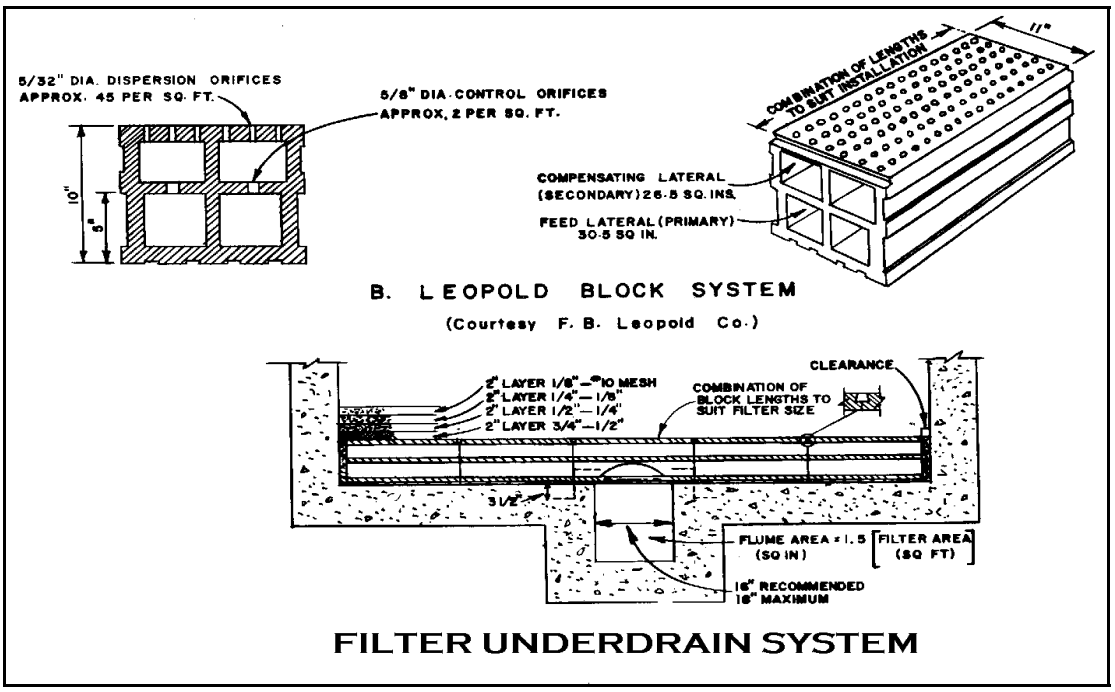

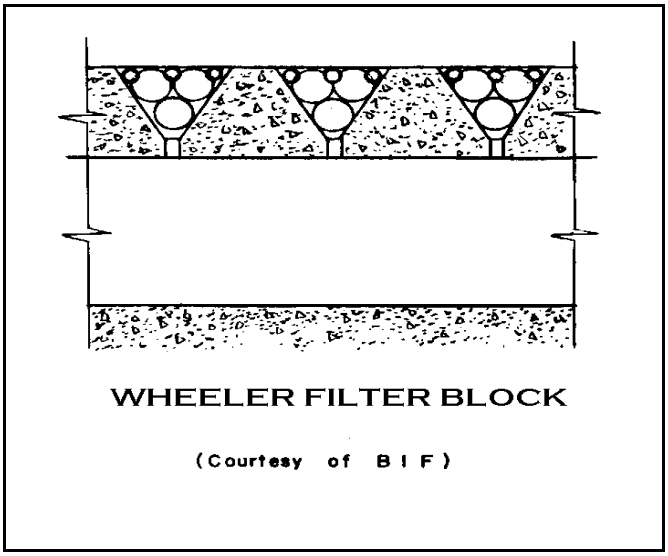

Filter media consists of sand, gravel, and small rocks of varying sizes. Six to eight inches of small rock is placed on top of the filter underdrain. A layer of pea gravel is placed on top of the rocks, usually three to six inches in depth, followed by layer of gravel of increasingly smaller size. This material will support the sand and keep it away from the underdrain. The actual filter media is a layer of medium size sand about 24 inches in depth. This sand should be sized so that the grains are between 0.3 to 0.6 millimeters in diameter. The uniformity coefficient for the sand media should be at least 0.9. This means that 90% of the grains will fall within the 0.3-0.6 mm range.

The **rate of flow controller** maintains a constant flow of water throughout the filter run. As the filter media becomes clogged the rate of flow controller opens a valve on the effluent line that compensates for the head loss through the filter. When the head loss reaches 8 feet, the rate of flow controller is fully open.

Loss of head gauge indicates when the filter is in need of backwashing. The loss of head is determined by the difference between the level of water in the filter and the level of a column of water that represents the pressure in the effluent line. This is referred to as the feet of head loss through the sand bed. When the head loss reaches 8 feet the filter should be backwashed.

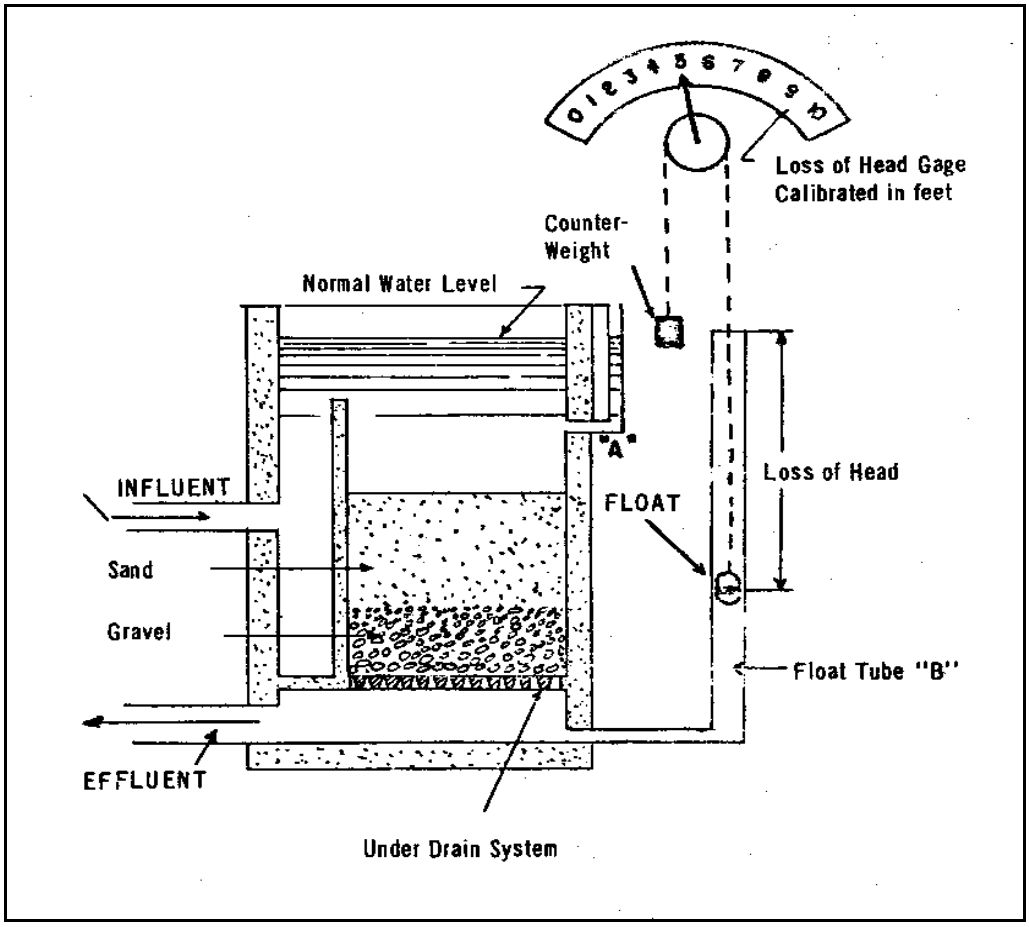

Loss of Head Gauge

Five **valves** are needed to properly operate a filter. The "influent" and "effluent" valves are open during normal operation and closed during backwash. The "backwash valve" provides a means for cleaning the filter and the "waste valve" allows the backwash water to leave the filter. A “filter-to-waste valve” is used to waste the first few minutes of the filter run allow the filter media time to compact. This is important to prevent turbidity or *Giardia* from passing through the filter before the media is compacted. A sixth, the “surface wash valve”, is also used when surface washers are installed. Surface washers of some type will usually be found on all new filter installations.

Backwash troughs collect the backwash water and transport it out of the filter. These troughs should be no farther than six feet apart and the rim of the trough should be 24-28 inches above the filter media. This is known as the freeboard of the filter. In filters that use anthracite coal in the media, the freeboard should be 32-36 inches to prevent loss of media during backwash.

Surface washers are used during the backwash cycle to agitate and break up the top layer of the sand where most of the dirt is trapped. This step helps reduce the amount of backwash water needed for a filter by reducing the time it takes to properly clean the filter.

A **backwash pump** or tower is used to supply the backwash water to the filter. It must be capable of supplying at least 15 gpm/sq. ft. of filter area. Enough backwash water must be available to run the backwash for 7-15 minutes on average.

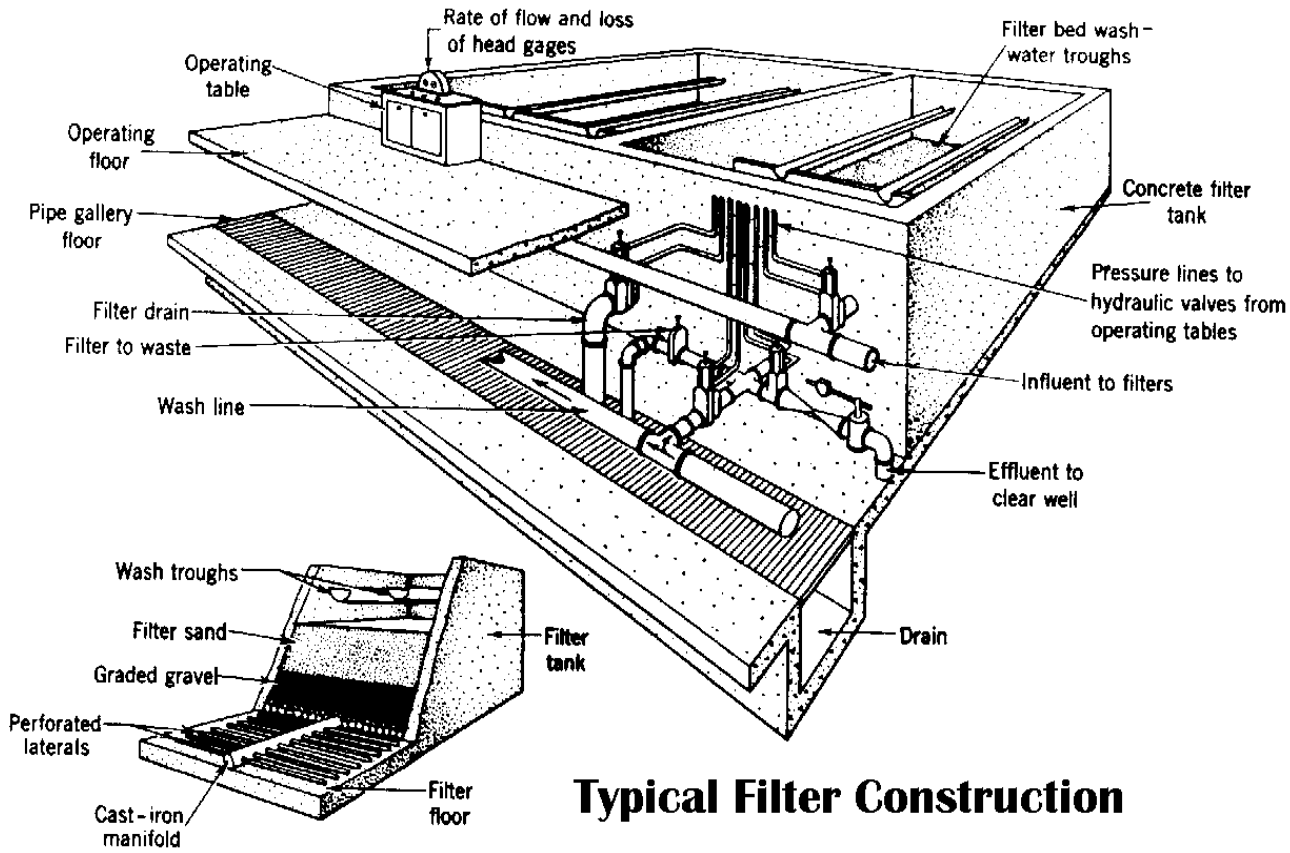

Typical Filter Construction

FILTER OPERATION

Rapid sand filters are designed to filter water at a rate of 2 gpm/sq.ft. of filter area. A clean filter will have a small amount of head loss (2-6"), but as the filter run continues the head loss will steadily build up. When head loss reaches 8 feet the filter should be backwashed. Running a filter at a excessively high head loss may cause the filter to become air bound. Air bound filters will have a high head loss immediately after backwash. This happens because the part of filter that is air bound is not filtering water and the clean part of the bed is filtering at a rate higher than 2 gpm/sq.ft. as a result. Filter runs should not exceed 100 hours without backwashing even if the head loss is less than 8 feet. After 100 hours the media may begin to pull away from the side of the filter and allow water to pass through without being filtered. This results in filter breakthrough and will result in high effluent turbidity. This is the primary cause of sudden increases in effluent turbidity readings. Short filter runs can result from poor chemical treatment and sedimentation. Jar tests should be run to improve the upstream processes to correct this problem.

BACKWASHING FILTERS

When a filter has been in operation for its optimum number of hours or its head loss reaches 8 feet the filter is taken out of service and backwashed. The proper procedure for backwashing filters is very important. This is a typical procedure for backwashing a sand filter. However, the operator should always follow manufacturer's instructions too avoid possible damage to the underdrain or media bed.

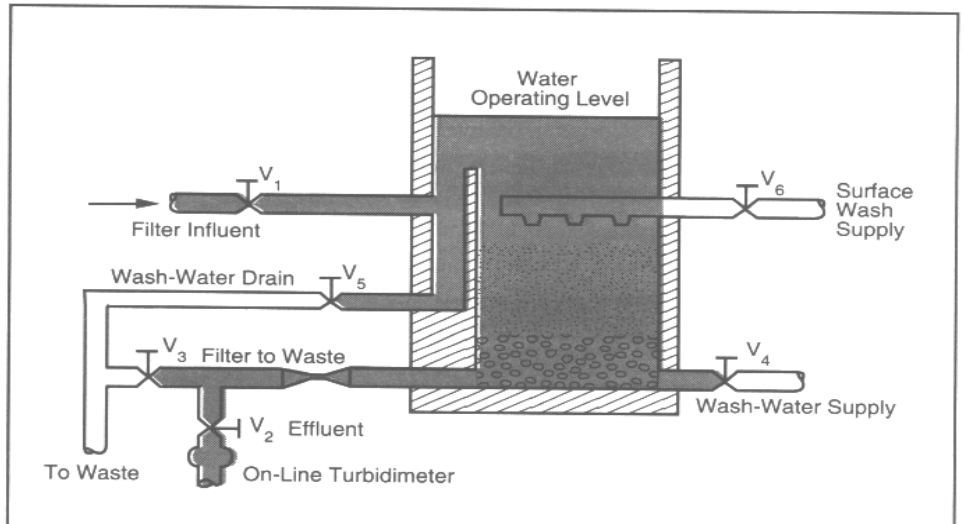

Valve Position During Filtration

Valve	*Filtering*	*Backwashing*	*Filtering to Waste*
V_1 — Influent	Open	Closed	Open
V_2 — Effluent	Open	Closed	Closed
V_3 — Filter to Waste	Closed	Closed	Open
V_4 — Wash-Water Supply	Closed	Open	Closed
V_5 — Wash-Water Drain	Closed	Open	Closed
V_6 — Surface Wash Supply	Closed	Open	Closed

FILTER BACKWASHING PROCEDURES

1 - The filter is taken out of service by closing the influent valve and letting the water filter down to about 6 inches from the top of the sand.

2 - Open the drain or waste valve.

3 - Slowly open the surface wash valve until it is operating at full efficiency.

4 - Once the surface wash valve is fully open, begin opening the backwash water valve very slowly until the optimum wash rate has been reached. If the filter is air bound the filter wash water valve should only be opened enough to bleed the air off. The filter should not be backwashed at the normal flow until all the air has been purged. Opening the backwash water valve too fast will "surge" the filters resulting in damage to the underdrain and media. If the backwash water is not evenly distributed, gravel support media may be displaced in the areas of higher flow.

5 - After a few minutes close the surface wash valve.

6 - When the wash water begins to clear, the backwash water valve should be closed slowly.

7 - Close the drain valve

8 - Open the influent valve about 10% to 25% so the filter fills slowly.

9 - When the water reaches the top of the back wash trough, open the filter to waste valve and allow the filter to run for about 30 minutes to waste.

10 - Close the filter to waste valve and open the effluent valve to put the filter back in service.

The backwash rate for sand filter should be 15 gpm/sq.ft. of filter area. This flow rate is needed to expand the sand bed 30-50% in order to separate the sand grains so that they can be thoroughly cleaned. Always continue to backwash until the wash water is clean. Failure to do so can result in the formation of mudballs. Once mudballs form, the only way they can be removed is by removing and replacing the filter media. If a backwash flow meter is not provided, a simple hook gauge can be used to determine the backwash rate.

A hook gauge is made using a length of board with nails or hooks driving into it that are 6 inches apart. The gauge is then placed on the side of the filter with the bottom hook just above the top of the backwash trough. While backwashing the filter, the waste valve is closed. The amount of time it takes for the surface of the water to rise from the point of one hook to the point of the other hook is measured. The waste valve must be opened immediately after the test to prevent the filter from overflowing. A wash water rate of 15 gpm/sq.ft. will cause the water level over the sand to rise 6 inches in 15 second or 24 inches in one minute, since 2 cubic feet of water is about 15 gallons.

TROUBLESHOOTING FILTER PROBLEMS

There are three basic operational problems associated with filter operations. Although they have been mentioned before, here is a list of the problems and causes:

Filter breakthrough - Identified by a sudden increase in effluent turbidity. It is caused by running the filter at too high a filtration rate or too long a run time causes it. This causes cracking and media separation from the filter wall.

Air binding - Identified by abnormally high headloss on recently backwashed filters. Caused by running a filter at too high a head loss. This creates low pressures in the filter that may result in the release of dissolved gases that become trapped in the filter bed or underdrain.

Mudballs - Identified by shortened filter runs and loss of filter capacity. They are created when the filter is not properly backwashed. The flow rate may have been too low or it was not backwashed long enough.

CLEANING FILTER BEDS

Sometimes filter media becomes coated with scale from the chemical treatment processes. Algae can also buildup in outdoor filters that are exposed to sunlight. If this becomes severe the filter may have to be taken out of service so that the media can be chemically cleaned. Sodium hydroxide is used to dissolve alum deposits. Hydrochloric acid is used to dissolve lime deposits. Chlorine or oxidizing agents are used to kill algae growth.

HIGH RATE FILTERS

Recent designs have included the use of different types of filter media other than sand in an effort to increase filtration rates and lengthen filter runs. Using two or more types of media with different particle sizes allows filterable solids to penetrate deeper into the filter bed. This allows the filter to be operated at higher flows. These filters are referred to as high rate filters

The most common type of media used in high rate filters, other than silica sand, is anthrafilt. Anthrafilt is anthracite coal screenings that are larger than filter sand. Particle size will be about 0.60 to 0.70 mm as compared to silica sand media of 0.40 to 0.60 mm. Some advantages of using anthrafilt media are higher filtration rates, longer filter runs, and less coating of the grains with lime and other materials. It is important that the backwash velocity be carefully controlled to prevent the anthrafilt from being carried over into the wash troughs and out of the filter box. Anthrafilt filters require at least 32 inches of free board on the backwash troughs because of its lighter weight.

Dual-media filters use a filter bed of both anthracite coal and silica sand. There is usually 12-18 inches of coal on top of 8-12 inches of sand. The upper layer of the lighter and coarser anthracite has voids about 20% larger than the sand, resulting in a larger to smaller grading of the media in the direction of flow. Dual media filters have a filter rate of 3-5 gpm/sq.ft. After backwashing, the filter media separates with the heavier sand falling to the bottom and the lighter coal on top. The larger floc particles are trapped in the surface of the coal layer while the finer particles are held in the sand. This creates deeper particle penetration into the filter bed and allows higher filtration rates.

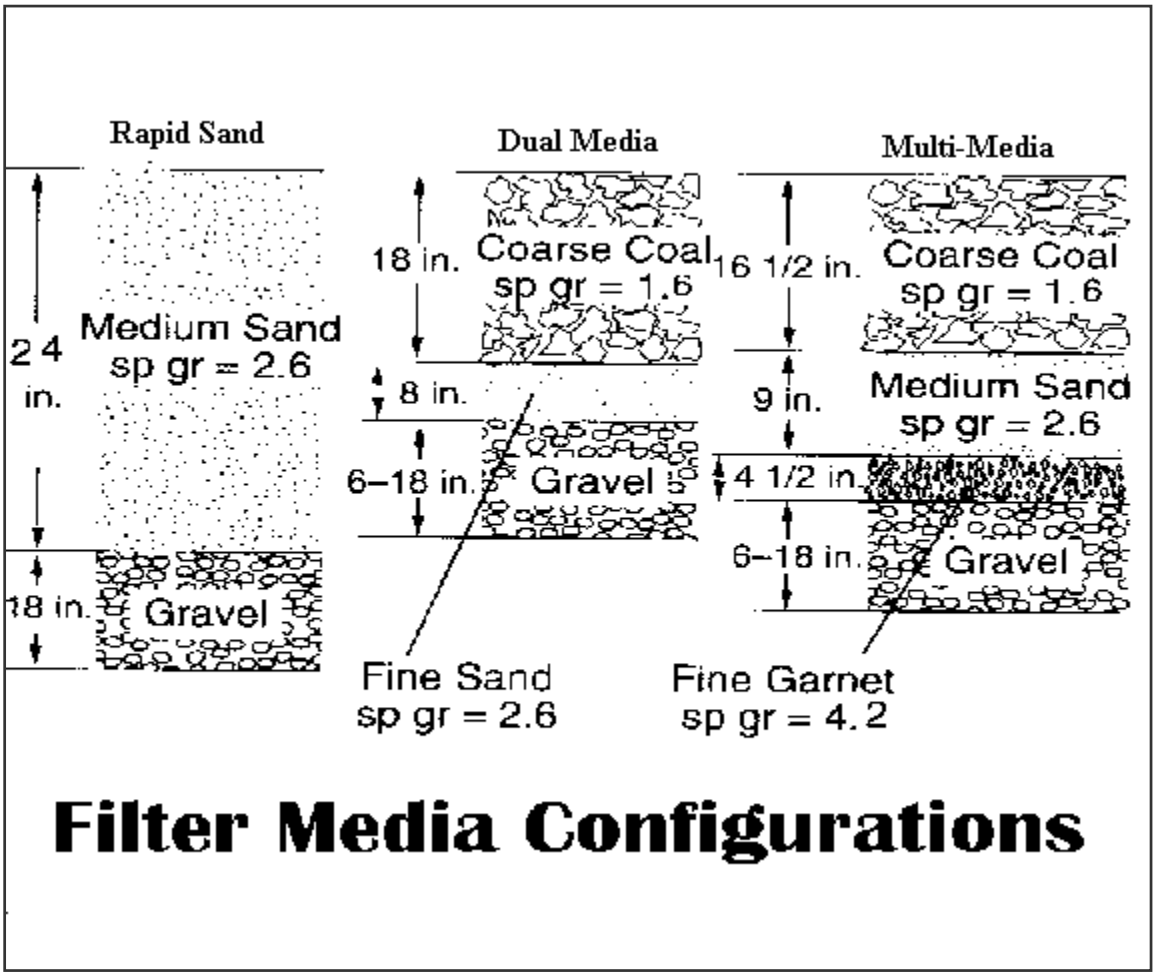

Multi-media filter beds using coal, silica sand, and garnet sand provide the highest filtration rate of any gravity filter. Filter rates for multi-media filters are from 5-8 gpm/sq.ft. Garnet sand, has a specific gravity of about 4.2, which is greater than coal (1.6 S.G.) or silica sand (2.6 S.G.). A multi-media filter bed will consist of 4-6 inches of garnet sand on the bottom, 8-10 inches of silica sand in the middle, and 12-18 inches anthracite coal on top. Because of the difference in specific gravities, separation of the different media occurs after backwashing with little intermixing. A typical mixed media filter has particle sizing gradually decreasing from about 0.7 mm at the top to 0.2 mm at the bottom. In addition to gravity filters, mixed media filters are also being used in pressure filters.

REFERENCES

SACRAMENTO, *WATER TREATMENT PLANT OPERATION*, 4TH ED, 1999, VOL. 1, CHAPTER 6

TASTES AND ODORS

ADVANCED STUDY QUESTIONS

1. What is the best way to remove organic tastes and odors?

2. What types of tastes and odors can be removed by aeration?

3. Which kinds of algae cause most of the organic tastes and odors?

ADVANCED SAMPLE TEST QUESTIONS

1. Pre-chlorination to remove tastes and odors can result in the formation of carcinogenic compounds called

   A. Colloids
   B. THM's (Trihalomethanes)
   C. NTU's

2. Which type of algae will cause problems by clogging the filter bed?

   A. Green
   B. Diatoms
   C. Blue-green
   D. Brown

3. The chemical used to kill algae in a lake is:
   A. Alum
   B. Copper sulphate
   C. Caustic soda
   D. Carbonic acid

4. Activated carbon should be added:

   A. After sedimentation
   B. As far upstream of coagulation as possible
   C. In the flash mixer
   D. After disinfection

COAGULATION AND FLOCCULATION

ADVANCED STUDY QUESTIONS

1. What is a coagulant aid?

2. What is the detention time for a rapid mixer??

3. What type of polymer will attract negatively charged turbidity particles?

4. What is hydraulic shear in a flocculator?

5. How do colder temperatures affect coagulation and flocculation?

ADVANCED SAMPLE TEST QUESTIONS

1. Which two chemicals are used to remove turbidity?

   A. Soda Ash and lime
   B. Copper sulphate and caustic soda
   C. Alum and lime

2. Which of the following is considered to be a coagulant aid?

   A. Lime
   B. Polymer
   C. Bentonite
   D. All of the above

3. Alum precipitates as

   A. Aluminum carbonate
   B. Aluminum sulphate
   C. Aluminum hydroxide

4. Turbidity removal with alum is best accomplished at what pH?

   A. 3.5
   B. 5.0
   C. 6.5

5. Which of the following will not lower the pH?

   A. Alum
   B. Carbonic acid
   C. Ferric chloride
   D. Sodium carbonate

IRON AND MANGANESE

ADVANCED STUDY QUESTIONS

1. What color is associated with manganese problems?

2. What other treatment process is required if iron is removed by aeration?

3. What is a sequestering agent?

ADVANCED SAMPLE TEST QUESTIONS

1. Iron can be a problem for water systems when the concentration exceeds:

   A. 0.05 mg/l
   B. 0.3 mg/l
   C. 3.0 mg/l
   D. 10 mg/l

2. Which of the following is a sequestering agent?

   A. Calgon
   B. Sodium hexametaphosphate
   C. Polyphosphates
   D. All of the above

3. Enough Calgon should be added to keep iron from oxidizing for:

   A. 2 days
   B. 4 days
   C. 6 days

SEDIMENTATION

ADVANCED STUDY QUESTIONS

1. Why are baffles important in a sedimentation basin?

2. What is the detention time for a sedimentation basin?

3. What can happen when sludge is not removed often enough?

4. Why is the weir overflow rate important?

5. What type of device protects the sludge removal equipment in a sedimentation basin?

ADVANCED SAMPLE TEST QUESTIONS

1. An upflow clarifier will have which of the following processes?

   A. Coagulation
   B. Flocculation
   C. Sedimentation
   D. All of the above

2. Sludge that rises to the surface of a sedimentation basin is caused by:

   A. Not removing sludge often enough
   B. Removing sludge too often
   C. pH is too low
   D. Surface loading rate is too low

3. Pin floc leaving a sedimentation basin may indicate a problem with:

   A. Coagulation
   B. Flocculation
   C. Sedimentation
   D. Disinfection

FILTRATION

ADVANCED STUDY QUESTIONS

1. What are the three kinds of gravity filters?

2. What is the primary function of the filter underdrain?

3. What causes air binding in a filter?

4. What is freeboard in a filter?

5. What does the uniformity coefficient mean regarding filter media sand?

ADVANCED SAMPLE TEST QUESTIONS

1. What is the backwash rate for a rapid sand filter?

   A. 2 gpm/sq.ft.
   B. 15 gpm/sq.ft.
   C. 20 gpm/sq.ft.
   D. 25 gpm/sq.ft.

2. What is the maximum run time for a gravity filter?

   A. 8 hours
   B. 20 hours
   C. 48 hours
   D. 100 hours

3. During backwash, the filter bed should expand:

   A. 5-10%
   B. 15-20%
   C. 30-50%
   D. 60-80%

4. If the backwash time is too short, what may result?

   A. Too much freeboard
   B. Mudballs
   C. Loss of filter media
   D. Filter breakthrough

5. If the filtration rate is too high, what may result?

   A. Filter breakthrough
   B. Mudballs
   C. Reduction in operating costs
   D. Lower headloss

SAFETY

Based on past studies, the water and wastewater industry has one if the highest injury rates in the nation. Workers in these areas are involved in construction and excavations, confined spaces, hazardous chemicals, and mechanical equipment that pose a serious injury risk when proper training, equipment, and procedures are not utilized. The Occupational Safety and Health Administration (OSHA) is responsible for developing regulations regarding worker safety and protection.

Employers are responsible for providing employees with the proper safety equipment and training in its use. They are also responsible for development and implementation of safety policies for their workplace. The employees, after proper training, are responsible for recognizing the safety issues; following approved safety procedures, and properly utilizing the associated safety equipment.

LOCK OUT/TAG OUT (LOTO)

Lock out/tag out regulations deal with the need to isolate a machine from its energy source to prevent it from starting while work is being done in and around the equipment. Energy sources can include electrical energy, hydraulic energy, pneumatic energy, thermal energy, and chemical energy. This can be either active energy or stored energy. Stored energy can take many forms. Some examples of stored energy are; electrical energy stored in capacitors, pneumatic energy stored in a compressor tank, and hydraulic water pressure in an isolated line. Any stored energy must be dissipated prior to working on the equipment. Employers are responsible for establishing an “Energy Control Plan” for LOTO work and supply each worker with their individual LOTO locking devices.

LOTO requires workers to isolate and de-energize these sources and lock and tag them prior to working on the equipment or process. Only trained personnel should conduct lock out/tag out procedures. Each individual involved in the work should attach their personal LOTO lock to the disconnect or isolation device. This assures that the equipment cannot be restarted until each individual is finished with their task and is clear of the equipment.

Tags are used to provide information regarding the date and nature of the lockout and the individual responsible for removing the lockout. Tags are not substitutes for locks. Any isolation that can be locked must be locked and tagged. Lockout devices may also include chains, valve clamps, wedges, jacks, or key blocks.

Anyone who enters a LOTO work area must be informed that a LOTO situation exists. If they are to be involved in the work, they must also apply their own LOTO locks. Workers that leave a LOTO site must take their LOTO locks with them. If work is not completed at the end of a shift, all LOTO locks must be removed and be replaced with an equipment protection lock until work resumes. If equipment must be temporarily restarted, the LOTO must be removed during the restart and reapplied before work can continue.

CONFINED SPACE ENTRY

The water and wastewater industry has one of the highest numbers of confined space injuries per capita in the country. The vast majority of confined space related injuries result in fatalities. Another disturbing fact is that 40% of the confined space related fatalities are people who tried to rescue someone else from a confined space.

A confined space is defined by the following parameters. It must be large enough for a person to enter and do work. It has openings that make entry or exit difficult. It is not intended for continuous occupancy. Any open surface tank that is deeper than four feet is also considered a confined space. Confined spaces fall into two categories; permit required and non-permit required. A confined space becomes permit required when it has potential for a hazardous atmosphere, potential for engulfment, a hazardous internal configuration, or other recognized hazards such as dangerous equipment or hot work (welding, cutting torch, etc.) that is in progress.

All employees involved in confined space entries must have the proper training in entry procedures and use of safety equipment. An entry supervisor is responsible for conducting the testing and completing the permit. Atmospheric testing should include oxygen concentration, Lower Explosive Limit for explosives, and any toxic gases that may be present. The oxygen concentration must be between 19.5-23.5%. The alarm point for explosives is 10% of Lower Explosive Limit (LEL).

An attendant must be present and stationed outside the confined space to monitor the entrants while they are working. The attendant must maintain constant verbal and visual communications with the entrants. The attendant must also be prepared to instruct the entrants to exit the confined space should the equipment fail or the entrants exhibit impaired judgement.

Any confined space must be tested for a hazardous atmosphere before the entry. Monitoring must continue while the entrants are in the confined space. Permit required confined spaces also require ventilation during the entry and self-contained or supplied air must be used if ventilation fails to produce a safe atmosphere. Permit required confined space entries also require rescue equipment such as a harness and tripod for emergency rescues. If the space is configured in a way that prevents the use of self-rescue equipment, an emergency rescue team must be on-site during the entry. When the entry is completed, the entry supervisor must complete the permit form and file a copy with the appropriate supervisor and a confined space entry master file. Non-permit confined spaced must be reassessed periodically. Any non-permit space can be reclassified, as permit required, based on the results of these assessments.

HAZARD COMMUNICATION STANDARD

OSHA established the Hazard Communication Standard in 1986. The standard was created to provide an information system on hazardous chemicals for both employers and employees. The Haz-Com Standard requires employers to ensure their employees know what hazardous materials exist in the workplace, how to safely use these materials, and how to deal with any emergencies that arise during use. Employers are required to provide the proper safety equipment, train employees in the safe use of any hazardous materials on a jobsite, and maintain records of both.

Producers of hazardous materials are required to provide customers with a Material Safety Data Sheet (MSDS) for each individual chemical or material. MSDS's must be kept on file and available to employees. Employee training should also include how to read and understand the information on the MSDS. The hazards that are involved fall into two basic categories:

- Health Hazards
- Physical hazards

Health hazards refer to immediate or long-term harm to the body caused by exposure to hazardous chemicals. Physical hazards like flammability or corrosivity can also cause injury to skin, eyes and the respiratory system. MSDS's are divided into eight sections.

Material Safety Data Sheet Sections

1. Manufacturers Contact Information
2. Hazardous Ingredients/Identity Information
3. Physical/Chemical Characteristics
4. Fire and Explosion Hazard Data
5. Reactivity Data
6. Health Hazard/First Aid Information
7. Precautions for Safe Handling and Use
8. Control/Cleanup Measures

NFPA COLOR-CODE WARNING SYSTEM

OSHA uses a system based on the National Fire Protection Association (NFPA) diamond warning symbol as part of the MSDS information. This code is also required for all container labels. The NFPA symbol has four color-coded diamond-shaped sections. The top (red) diamond is the Flammability Hazard rating. The left (Blue) diamond is the Health Hazard rating. The right (yellow) diamond is the Reactivity Hazard rating. The bottom (White) diamond contains special symbols to indicate properties not explained by the other categories. A number–based rating system is used for each section, ranging from 0 – least dangerous to 4 – extremely dangerous.

OTHER HAZARD SYMBOLS

Acid	Acids
Base	Alkalis, cyanides
Oxy	Oxidizers
Flam	Flammables
Rad	Radioactive
~~W~~	Use no water

EXCAVATION SAFETY

Proper shoring or sloping of trenches and excavations is a major safety issue for many distribution system operators. New construction usually involves more controlled conditions than emergency repairs. Excavations for emergency repairs almost always involve digging and shoring in saturated soils and flooded trenches. A "competent person" must supervise all excavation operations. A competent person is someone who has extensive training in soil mechanics and shoring operations.

All trenches over 4 feet deep must have ladder from entry and exit. The ladders must extend at least 3 feet above the top of the trench and ladders must not be stationed more than 25 feet apart. Trenches over 5 feet deep must be properly shored or sloped to protect entrants from trench wall collapse and cave-ins. The competent person must determine the proper Maximum Allowable Slope, formerly referred to as Angle of Repose, for the given soils type. Soils are either Type 1,2, or 3. Type 3 soils are the least stable and require the shallowest Maximum Allowable Slope. Spoil from the excavation must be placed at least 2 feet from the edge of the excavation (farther with more unstable soils.)

Shoring must be installed without worker entry into the excavation. Trench boxes are useful for long trenches where it can be moved along the trench. This saves some of the setup and breakdown time required with shoring. Ladders must be positioned so that workers can enter and exit without stepping outside the shoring or trench box. Excavations may become confined spaces if they are located close to a source of potentially hazardous gases (underground gas tanks, landfills, etc.)

REFERENCES:

Sacramento, *Water Treatment Plant Operation*, 4th Edition, 1999, Volume 2, Chapter 20
Sacramento, *Small Water Systems O & M*, 4th Edition, 2001, Chapter 6
Sacramento, *Water Distribution System O & M*, 4th Edition, 2000, Chapter 7

BASIC STUDY QUESTIONS

1. What does locking out a piece of equipment mean?

2. What must be done prior to entering a confined space?

3. What is the maximum allowable depth of an unshored excavation?

BASIC SAMPLE TEST QUESTIONS

1. Ladders must extend at least ___ feet above the trench?

   A. 1
   B. 2
   C. 3
   D. 4

2. An attendant must be stationed outside every confined space entry.

   A. True
   B. False

3. Each worker must attach a LOTO lock on a locked out machine.

   A. True
   B. False

ADVANCED STUDY QUESTIONS

1. What kinds of training should employees receive regarding hazardous materials?

2. What is the lower limit for oxygen concentrations in confined spaces?

3. What types of energy sources must be isolated during lock out/ tag out?

ADVANCED SAMPLE TEST QUESTIONS

1. What types of materials pose a physical hazard?

   A. Flammables
   B. Acids
   C. Oxidizers
   D. All of the above

2. Which type of soil requires the shallowest Maximum Allowable Slope or the widest trench?

   A. Type 1
   B. Type 2
   C. Type 3

3. Which of the following statements is true regarding excavation shoring?

   A. Shoring must be installed and removed from outside the trench.
   B. A competent person must supervise the installation of the shoring devices.
   C. Ladders must be located inside the shoring.
   D. All of the above

MATHEMATICS FOR WATER OPERATORS

The understanding of the mathematics of water hydraulics (flows, pressures, volumes, horsepower, velocities) and water treatment (detention time, chemical dosage) is an important tool for all water system operators. This chapter covers most of the major categories of math calculations that are important to know for both certification and daily operations of water systems. The examples range from basic problems, that might appear on a Class 1 or 2 exam, to more complex problems that could be found on a Class 3 or 4 exam. The advanced levels will also have more problems related to water treatment processes like dosage problems and detention time problems.

PRESSURE

Water pressure is measured in terms of pounds per square inch (psi) and feet of head (height of a water column in feet). A column of water 2.31 feet high creates a pressure of 1 psi. The water pressure at the bottom of a storage tank can be used to determine the water level in the tank. Centrifugal pumps are rated in feet of Total Dynamic Head (TDH) but system pressures are measured in psi. All water system operators must be able to convert from one pressure unit to the other.

If the pressure (psi) is known, The height of the water column can be determined by multiplying the psi by 2.31.

psi X 2.31 = Feet of Head

Example:

1. A pressure gauge at the bottom of a storage tank reads 30 psi. What is the water level in the tank?

   A. Convert psi to feet of head

   30 psi x 2.31 = **69.3 feet of water above the gauge**

If the height of a column of water is known, the pressure it exerts can be determined by dividing the feet of head by 2.31.

$$\frac{\text{Feet of Head}}{2.31} = \text{psi}$$

Example:

2. The reservoir level is 115 feet above the pump discharge. What is the discharge pressure on the pump?

   A Convert feet of head to psi.

   $\frac{115 \text{ feet}}{2.31}$ = **49.8 psi**

Advanced questions may require you to calculate the feet of head or psi before it can be converted.

Examples:

3. A pump is installed at 5320 feet above sea level. The overflow of the reservoir is at 5460 feet above sea level. What is the discharge pressure on the pump in psi?

A. Find the difference in elevation
5460 feet – 5320 feet = 140 feet of head
B. Convert feet of head to psi
$\frac{140 \text{ feet}}{2.31}$ = **60.6 psi**

4. A discharge pressure gauge on a pump reads 72 psi when the pump is running. The pressure gauge at the top of a hill 40 feet above the pump reads 45 psi. What is the friction loss in the pipe in feet of head?

A. Find the difference in the pressures
72 psi – 45 psi = 27 psi
B. Convert psi to feet of head
27 psi x 2.31 = 62.4 feet of head
C. Subtract the difference in elevation to find the friction loss
62.4 feet – 40 feet = **22.4 feet of head**

FLOW

The amount of water moving through the system can be measured in one of three different units. They are gpm (gallons per minute), mgd (millions of gallons per day), and cfs (cubic feet per second). The conversions are listed below.

mgd x 700 = gpm	$\frac{\text{gpm}}{700}$ = mgd
cfs x 449 = gpm	$\frac{\text{gpm}}{449}$ = cfs

Examples:

1. A system uses 2 mgd. How many gallons per minute does it use?

A. Convert mgd to gpm
2 mgd x 700 = **1400 gpm**

2. A pipeline has a carrying capacity of 3 cfs. How many gpm can it handle?

A. Convert cfs to gpm
3 cfs x 449 = **1347 gpm**

3. A well pumps 350 gpm. How many mgd will it pump?

A. Convert gpm to mgd
$\frac{350 \text{ gpm}}{700}$ = **0.5 mgd**

AREAS

In order to calculate volumes of circular tanks and velocities in pipes, the area of the circle must first be determined. There are two basic formulae used to calculate the area of a circle.

Area = 3.1416 x r^2	Area = d^2 x 0.785
r = radius	d = diameter

Examples:

1. A sedimentation basin is 60 feet in diameter. What is the surface area of the tank?

A. Calculate the area
3.1416 x 30' x 30' = **2830 square feet**
60' x 60' x 0.785 = **2830 square feet**

2. A pipeline has diameter of 12 inches. What is the area of the pipe?

A. Calculate the area
3.1416 x 6" x 6" = **113 square inches**
12" x 12" x 0.785 = **113 square inches**

VOLUMES

The volume of a rectangular tank can be determined by multiplying the length, height, and width together.

Volume of rectangular tank (ft^3) = L' x H' x W'

Example:

1. A sedimentation basin is 60' long by 40' wide and 10' deep. What is the volume of the tank in cubic feet?

A. Calculate the volume
60' x 40' x10' = **24,000 cubic feet (ft^3)**

The volume of a circular tank can be determined by multiplying the area of the by the height (or depth) of the tank.

Volume of circular tank (ft^3) = 3.1416 x r'^2 x H'
Or
Volume of circular tank (ft^3) = d'^2 x 0.785 x H'

Example:

1. A sedimentation basin is 60'in diameter and 12' deep. What is the volume of the tank?

A. Calculate the volume
3.1416 x 30' x 30' x 12' = **33,900 cubic feet (ft^3)**
or 60' x 60' x 0.785 x 12' = **33,900 cubic feet (ft^3)**

VOLUMES IN GALLONS

It is often necessary to calculate a volume of a tank or pipe in gallons rather than cubic feet. In most cases the volume must be calculated in cubic feet and then converted into gallons. This is determined by multiplying cubic feet by 7.48.

Cubic feet x 7.48 = gallons

Example:

1. A sedimentation basin is 60' long by 40' wide and 10' deep. What is the volume of the tank in cubic feet?

   A. Calculate the volume
   60' x 40' x10' = 24,000 ft^3
   B. Convert cubic feet to gallons
   24,000 ft^3 x 7.48 = **179,500 gallons**

2. A circular tank has a diameter of 40 feet and is 10 feet deep. How many gallons will it hold?

   A. Calculate the volume
   3.1416 x 20' x 20' x 10' = 12,600 ft^3
   or 40' x 40' x 0.785 x 10' = 12,600 ft^3
   B. Convert cubic feet to gallons
   12,600 ft^3 x 7.48 = **94,200 gallons**

VOLUMES OF PIPES

The number of gallons contained in a one-foot section of pipe can be determined by squaring the diameter (in inches) and then multiplying by 0.0408. To determine the number of gallons in a particular length of pipe multiply the gallons per foot by the number of feet of pipe.

Volume (gal) = D''^2x 0.0408 x Length'

Examples:

1. A 12" line is 1100 ft long. How many gallons does the pipe hold?

   A. Find the volume of the pipe in gallons
   12" x 12" x 0.0408 x 1100 = **6460 gallons**

2. A 6" line is 654 ft long. How many gallons does the pipe hold?

   A. Find the volume of the pipe in gallons
   6" x 6" x 0.0408 x 654 = **960 gallons**

VELOCITY

The velocity of the water moving through a pipe can be determined if the flow in cubic feet per second (cfs) and the diameter of the pipe (inches) are known. The area of the pipe must be calculated in square feet (ft^2) and the flow is then divided by the area.

$$\text{Velocity (fps)} = \frac{\text{Flow (cfs)}}{\text{Area (ft}^2\text{)}}$$

Example:

1. A 24" pipe carries a flow of 11 cfs. What is the velocity in the pipe?

A. Change diameter in inches to feet
24"/12" per ft = 2 ft.
B. Find area of the pipe in sq.ft.
1 x 1 x 3.1416 = 3.14 sq.ft.
C. Find the velocity in fps

$$\frac{11 \text{ cfs}}{3.14 \text{ sq.ft.}} = \mathbf{3.5\ fps}$$

The flow through a pipe (cfs) can be determined if the velocity and pipe diameter are known. The area of the pipe must be calculated in square feet and then multiplied by the velocity (fps.)

Examples:

2. A 12"' pipe carries water at a velocity of 5.0 fps. What is the flow in cfs?

A. Change inches to ft.
12"/12" per ft = 1 ft.
B. Find area of the pipe in sq.ft.
0.5 x 0.5 x 3.1416 = 0.785 sq.ft.
C. Find the flow in cfs
5.0 fps x 0.785 sq.ft. = **3.9 cfs**

3. A 12" pipe carries 1400 gpm at 4.0 fps velocity and reduces to a 6" pipe. What is the velocity in the 6" pipe?

A. Convert flow to cfs

$$\frac{1400 \text{ gpm}}{449 \text{ gpm/cfs}} = 3.12 \text{ cfs}$$

B. Change inches to ft.
6"/12" per ft = 0.5 ft.
C. Find area of the pipe in sq.ft.
0.25' x 0.25' x 3.1416 = 0.196 sq.ft.
D. Find the velocity in fps

$$\frac{3.12 \text{ cfs}}{0.196 \text{ sq.ft.}} = \mathbf{16\ fps}$$

DETENTION TIME

Detention time is the length of time in minutes or hours for one gallon of water to pass through a tank. To calculate detention time, the capacity of a tank in gallons is divided by the flow in gallons per minute (gpm) or gallons per day (gpd). If gpm is used, the answer will be in minutes and must be divided by 60 minutes to get hours. If gpd is used, the answer will be in days and must be multiplied by 24 hours. The detention time formula can also be used to calculate how long it will take to fill a tank.

Examples:

1. A 50,000 gallon tank receives 250,000 gpd flow. What is the detention time in hours?

   A. Find detention time in days

   $$\frac{50{,}000 \text{ gal.}}{250{,}000 \text{ gal/day}} = 0.2 \text{ days}$$

   B. Change days to hours

   0.2 days x 24 hrs/day = **4.8 hours**

2. A tank is 60' x 80' x 10' and the flow is 2.0 mgd? What is the detention time in hours?

   A. Find Volume in cubic feet

   60' x 80' X 10' = 48,000 cu.ft.

   B. Change cubic feet to gallons

   48,000 cu.ft. X 7.48 gal/cu.ft. = 359,000 gal.

   C. Change mgd to gal/day

   2.0 mgd = 2,000,000 gal/day

   D. Find D.T. in days

   $$\frac{359{,}000 \text{ gal.}}{2{,}000{,}000 \text{ gal/day}} = 0.18 \text{ days}$$

   E. Change days to hours

   0.18 days x 24 hrs/day = **4.3 hours**

3. A tank is 100' in diameter and 22 feet deep. If the flow into the tank is 1500 gpm and the flow out of the tank is 300 gpm, how many hours will it take to fill the tank?

   A. Calculate the volume in cubic feet

   3.1416 x 50' x 50' x 22' = 173,000 ft^3

   or 100' x 100' x 0.785 x 22' = 173,000 ft^3

   B. Change cubic feet to gallons

   172,800 ft^3 x 7.48 = 1,290,000 gallons

   C. Calculate the net inflow

   1500 gpm – 300 gpm = 1200 gpm

   D. Calculate how long until full (detention time)

   $$\frac{1{,}290{,}000 \text{ gal}}{1200 \text{ gpm}} = 1075 \text{ minutes}$$

   E. Change minutes to hours

   $$\frac{1075 \text{ min}}{60 \text{ min/hr}} = \textbf{17.9 hours}$$

DOSAGE

Chemical dosages are measured in ppm (parts per million) or mg/l (milligrams per liter.) Parts per million (ppm) is always a comparison of weight (pounds per million pounds). One pound of chemical added to one million pounds of water would be a dosage of 1 ppm. Since each gallon of water weighs 8.34 pounds, one million gallons of water weighs 8.34 million pounds and would require 8.34 pounds of chemical to obtain a dosage of l ppm. Milligrams per liter (mg/l) is the metric term for a dosage equal to ppm.

1 gallon = 8.34 lbs.
1 ppm = 1 mg/l

The number of pounds of chemical needed to achieve a certain dosage can be determined by multiplying the ppm by the number of millions of gallons treated and then by 8.34 lbs/gal. The amount of water to be treated must always be in terms of millions of gallons (mgd).

mg/l x mgd x 8.34 = pounds per day

Examples:

1. How many lbs/day of chlorine are needed to provide a dosage of 2.2 mg/l in 800,000 gal/day?

   A. Change gal/day to mgd
      800,000 gpd = 0.8 mgd
   B. Calculate lbs/day
      2.2 mg/l x 0.8 mgd x 8.34 =**14.7 lbs/day**

If HTH is used, instead of chlorine gas, only 65-70% of each pound will be chlorine. Therefore, the amount of HTH must be calculated by dividing the pounds of chlorine needed by 0.65 or 0.70.

2. A tank is 44' in diameter and 22' high and is dosed with 50 ppm of chlorine. How many pound of 70% HTH is needed?

   A. Find the volume of the tank in cubic feet
      22' x 22' x 3.1416 x 22' = 33,450 cu.ft.
   B. Change cu.ft. to gallons
      33,450 x 7.48 = 250,000 gallons
   C. Change gallons to mgd
      250,000 gallons = 0.250 mgd
   D. Find lbs of chlorine
      50 ppm x 0.25 mg x 8.34 = 104.25 lbs of chlorine
   E. Change percent available to a decimal equivalent
      70% = 0.70
   F. Find lbs of HTH
      $\frac{104.25 \text{ lbs Cl}}{0.70}$ = **149 lbs of HTH**

3. A chlorine pump is feeding 10% bleach at a dosage of 5 mg/l. If 2,200,000 gallons are treated in 16 hours, how many gallons per hour is the pump feeding?

A. Change gallons to mg
2,200,000 gallons = 2.2 mg
B. Find lbs of chlorine
5 ppm x 2.2 mg x 8.34 = 91.7 lbs of Chlorine
C. Change percent available to a decimal equivalent
10% = 0.10
D. Find lbs of Bleach
$\frac{\text{91.7 lbs Cl}}{\text{0.10}}$ = 917 lbs of Bleach
E. Find gallons of Bleach
$\frac{\text{917 lbs Bleachl}}{\text{8.34 lbs/gal}}$ = 110 gallons of Bleach
F. Find gallons per hour
$\frac{\text{110 gal}}{\text{16 hr}}$ = **6.9 gal/hr**

4. A 12" pipe is 1880' long and must be disinfected with 50 ppm of 65% HTH. How many pounds of HTH are needed?

A. Find the volume of the pipe in gallons
12" x 12" x .0408 x 1880' = 11, 045 gallons
B. Change gallons to mgd
11,045 gallons = 0.011 mgd
C. Find lbs of chlorine
50 ppm x 0.011 mgd x 8.34 = 4.6 lbs of Chlorine
D. Change percent available to a decimal equivalent
65%= 0.65
E. Find lbs of HTH
$\frac{\text{4.6 lbs Cl}}{\text{0.65}}$ = **7.1 lbs of HTH**

Liquid chemical dosages can be calculated to determine the gallons per day. Chemical feed pumps are calibrated using ml/min. If you take 3785 ml/gal and divide it by 1440 min/day, the conversion for gal/day to ml/min can be determined.

$$\frac{3785 \text{ ml/gal}}{1440 \text{ min/day}} = 2.6 \text{ ml/min /gal/day}$$

Gal/day x 2.6 = ml/min

Examples:

5. A 20% available Fluoride solution is used to dose 2,000,000 gpd at 450 ppb (parts per billion). How many ml/min is the pump feeding?

   A. Change 450 ppb to ppm
      450 ppb = 0.45 ppm (mg/l)
   B. Change 2,000,000 gpd to mgd
      2,000,000 gpd = 2.0 mgd
   C. Find lbs of Fluoride
      0.45 ppm x 2.0 mgd x 8.34 = 7.5 lbs/day
   D. Change percent available to a decimal equivalent
      20%= 0.2
   E. Find lbs of Fluoride solution
      $\frac{7.5\text{lbs F}}{0.2}$ = 37.5 lbs of F solution
   F. Find gallons of fluoride
      $\frac{37.5 \text{ lbs solution}}{8.34 \text{ lbs/gal}}$ = 4.5 gpd
   G. Change gallon/day to ml/min
      4.5 gpd x 2.6 = **11.7 ml/min**

6. A 18% available Alum solution is used to dose 600,000 gpd at 25 mg/l. How many ml/min is the pump feeding?

   A. Change 600,000 gpd to mgd
      600,000 gpd = 0.6 mgd
   B. Find lbs of Alum
      25 mg/l x 0.6 mgd x 8.34 = 125 lbs/day
   C. Change percent available to a decimal equivalent
      18%= 0.18
   D. Find lbs of Alum solution
      $\frac{125 \text{ lbs Alum}}{0.18}$ = 695 lbs of Alum solution
   E. Find gallons of Alum
      $\frac{695 \text{ lbs solution}}{8.34 \text{ lbs/gal}}$ = 83.3 gpd
   F. Change gallon/day to ml/min
      83.3 gpd x 2.6 = **217 ml/min**

Sometimes there is too much information in the question. The example below has too much information. The well flow and storage tank data are not needed to work the problem.

Example:

7. A system has a well that produces 200 gpm and a 1500 gallon storage tank. There are 120 homes on the systems and the average daily consumption is 350 gallons/home. A chlorine dosage of 1.3 ppm is maintained using 65% HTH. How many pounds of HTH must be purchased each year?

A. Find system consumption
120 homes x 350 gallons/day/home = 42,000 gpd
B. Change gallons/day to mgd
42,000 gallons/day = 0.042 mgd
C. Find lbs/day of chlorine
1.3 ppm x 0.042 mg x 8.34 = 0.45 lbs/day of Chlorine
D. Change percent available to a decimal equivalent
65% = 0.65
E. Find lbs/day of HTH

$$\frac{0.45 \text{ lbs Cl}}{0.65} = 0.7 \text{ lbs/day of HTH}$$

F. Find lbs/year of HTH
0.7 lbs/day x 365 days/year = **255.5 lbs/year**

WIRE-TO-WATER CALCULATIONS

The term wire-to-water refers to the conversion of electrical horsepower to water horsepower. The motor takes electrical energy and converts it into mechanical energy. The pump turns mechanical energy into hydraulic energy. The electrical energy is measured as motor horsepower (MHp.) The mechanical energy is measured as brake horsepower (BHp.) And the hydraulic energy is measured as water horsepower (WHp.)

Horsepower is measured by lifting a weight a given distance in a specific time period. One horsepower is the amount of energy required to produce 33,000 ft-lbs of work per minute. That means that lifting 33,000 pounds one foot in one minute or lifting one pound 33,000 feet in the air in one minute would both require one horsepower worth of energy.

When water is pumped, performance is measured in flow (gallons/minute) and pressure (feet of head). If you multiply gallons per minute and feet of head the resulting units would be gallon-feet per minute. Multiply gallon-feet per minute by 8.34 pounds/gallon and the units become foot-pounds (of water) per minute. This can now be converted to water horsepower by dividing by 33,000 ft-lbs/min per horsepower.

$$\frac{\text{Gpm x 8.34 x Feet of Head}}{\text{33,000 ft-lbs/min/Hp}} = \text{Water Horsepower (WHp)}$$

This equation can be further simplified to:

$$\frac{\text{Gpm x Feet of Head}}{3960} = \text{Water Horsepower (WHp)}$$

Brake horsepower is the amount of energy that must go into the pump to produce the required WHp. Loses due to friction and heat in the pump reduce the pump's efficiency and require more energy in than goes out. If a pump is 80% efficient, it requires 10 BHp to generate 8 WHp.

$$\text{BrakeHp} = \frac{\text{WaterHp}}{\text{Pump Efficiency}}$$

Motor horsepower is the amount of electrical energy that must go into the motor to produce the required BHp. Loses due to friction and heat in the motor reduce the motor's efficiency and require more energy in than goes out. If a motor is 88% efficient, it requires 10 BHp to generate 8.8 BHp

$$\text{MotorHp} = \frac{\text{BrakeHp}}{\text{Motor Eff}}$$

OR

$$\text{MotorHp} = \frac{\text{WaterHp}}{\text{Motor Eff x Pump Eff}}$$

Motor horsepower can be converted into kilowatts by multiplying by 0.746 Kw/Hp. Kilowatt-hours can be determined by multiplying kilowatts by run time in hours.

MotorHp x 0.746 Kw/Hp x Hours = Kw-Hours of electricity

The following example has seven problems that relate to wire-to-water calculations. Each problem will take the calculation one step further. It is intended to show how the steps are linked, not to represent an example of a set of exam questions. An actual exam question would possibly require the calculation of Water horsepower (Problems 1-3) or calculation of cost of operation (Problems 1-7)

Pump Data:
6 Feet - Negative Suction Head
96 Feet - Discharge Head
17 Feet - Friction Loss
400 gpm - Flow
Motor Efficiency - 90%
Pump Efficiency - 80%

1. What is the static head on the pump?

96 ft + 6 ft = **102 ft**

2. What is the total dynamic head?

96 ft + 6 ft + 17 ft = **119 ft TDH**

3. What is the Water Horsepower that the pump delivers?

$$\frac{400 \text{ gpm x } 119 \text{ ft}}{3960} = \textbf{12 WHp}$$

4. What is the Brake Horsepower?

A. Change 80% to a decimal
80% = 0.80
B. Find Brake Horsepower

$$\frac{12 \text{ Whp}}{0.80 \text{ Pump Eff}} = \mathbf{15\ BHp}$$

5. What is the Motor Horsepower?

A. Change 90% to a decimal
90% = 0.90
B. Find Motor Horsepower

$$\frac{15 \text{ BHp}}{0.90 \text{ Motor Eff}} = \mathbf{16.7\ MHp}$$

6. How many Kilowatts of electricity does the motor require?

6.7 MHp x 0.746 Kw/Hp = **12.5 Kw**

7. If the pump runs 13 hours a day and electric rates are $0.09/Kw-Hour, How much does it cost to run the pump for a month (30 days)?

A. Find Kw-Hours per day
12.5 Kw x 13 hours/day = 162 Kw-Hours/day
B. Find cost per day
162 Kw-Hours x $0.09/KwHour = $14.58/day
C. Find cost for the month
14.58/day x 30 days/month = **$437.40/month**

REFERENCES:

Sacramento, *Water Treatment Plant Operation*, 4th Edition, 1999, Volume 1-2, Appendix
Sacramento, *Small Water Systems O & M*, 4th Edition, 2001, Appendix
Sacramento, *Water Distribution System O & M*, 4th Edition, 2000, Appendix

BASIC SAMPLE PROBLEMS

1. A pressure gauge reading is 80 psi. How many feet of head is this?

   A. 173 feet
   B. 185 feet
   C. 200 feet
   D. 212 Feet

2. The pump is 150 feet below the reservoir level. What is the pressure reading on the gauge in psi?

   A. 52 psi
   B. 60 psi
   C. 65 psi
   D. 75 psi

3. A tank is 20' x 60' by 15' deep. What is the volume in gallons?

   A. 115, 000 gallons
   B. 128,000 gallons
   C. 135,000 gallons
   D. 154,000 gallons

4. A tank is 60' in diameter and 22' high. How many gallons will it hold?

   A. 465,000 gallons
   B. 528,000 gallons
   C. 640,000 gallons
   D. 710,000 gallons

5. A dosage of 2.4 mg/l of chlorine gas is added to 3.8 mgd. How many pounds per day of chlorine are needed?

   A. 68 lbs/day
   B. 76 lbs/day
   C. 82 lbs/day
   D. 88 lbs/day

6. How many gallons are in a 6" pipe 950 feet long?

   A. 1108 gallons
   B. 1253 gallons
   C. 1308 gallons
   D. 1395 gallons

7. A 12" pipe is carrying water at a velocity of 5.8 fps. What is the flow?

   A. 4.55 cfs
   B. 5.36 cfs
   C. 5.67 cfs
   D. 6.04 cfs

ADVANCED SAMPLE PROBLEMS

1. The pressure at the top of the hill is 62 psi. The pressure at the bottom of the hill, 60 feet below, is 100 psi. The water is flowing uphill at 120 gpm. What is the friction loss, in feet, in the pipe?

   A. 24.6 feet
   B. 27.8 feet
   C. 31.2 feet
   D. 33.8 feet

2. A tank is 82' in diameter and 31 feet high. The flow is 1600 gpm. What is the detention time in hours?

   A. 12.75 hours
   B. 14.80 hours
   C. 16.00 hours
   D. 18.25 hours

3. A tank is 120' x 50' x 14' deep. The flow is 2.8 mgd. What is the detention time in hours?

   A. 3.8 hours
   B. 4.4 hours
   C. 5.3 hours
   D. 6.2 hours

4. A 16" pipe is 1250 feet long. How much 65% HTH is needed to dose it with 50 mg/l of chlorine?

   A. 6.50 lbs
   B. 7.25 lbs
   C. 7.96 lbs
   D. 8.34 lbs

5. A solution of hydrofluosilisic acid is 22% fluoride. If 750 ppb are added to 5,600,000 gallons/day, how many ml/min should the pump be feeding?

   A. 26 ml/min
   B. 35 ml/min
   C. 42 ml/min
   D. 50 ml/min

6. A bleach system feeds 12% bleach. The dosage is 1.4 mg/l for 8.2 mgd. How many ml/min should the pump feed?

   A. 200 ml/min
   B. 250 ml/min
   C. 300 ml/min
   D. 350 ml/min

7. Pump Data:

   18 Feet - Positive Suction Head
   158 Feet - Discharge Head
   26 Feet - Friction Loss
   1200 gpm - Flow
   Motor Efficiency - 86%
   Pump Efficiency - 78%

What is the motor horsepower?

   A. 60 MHp
   B. 65 MHp
   C. 70 MHp
   D. 75 MHp

8. Pump Data:

   20 Feet - Positive Suction Head
   185 Feet - Discharge Head
   18 Feet - Friction Loss
   300 gpm - Flow
   Motor Efficiency - 90%
   Pump Efficiency - 80%
   Kw-Hour Cost = $0.11/Kw-Hr
   Average Run Time – 6 Hours/day

What is the cost to run the pump for 30days?

   A. $245.08
   B. $284.34
   C. $410.50
   D. $463.82