ATTACHMENT A1

CONTAINER STORAGE

(This page intentionally blank)

ATTACHMENT A1

CONTAINER STORAGE

TABLE OF CONTENTS

Introduction 1

A1-1 Container Storage 1
- A1-1a Containers with Liquid 1
- A1-1b Description of Containers 1
  - A1-1b(1) CH TRU Mixed Waste Containers 1
  - A1-1b(2) RH TRU Mixed Waste Containers 3
  - A1-1b(3) Container Compatibility 4
- A1-1c Description of the Container Storage Units 4
  - A1-1c(1) Waste Handling Building Container Storage Unit (WHB Unit) 4
  - A1-1c(2) Parking Area Container Storage Unit (Parking Area Unit) 13
- A1-1d Container Management Practices 14
  - A1-1d(1) Derived Waste 15
  - A1-1d(2) CH TRU Mixed Waste Handling 16
  - A1-1d(3) RH TRU Mixed Waste Handling 19
  - A1-1d(4) Handling Waste in Shielded Containers 22
- A1-1e Inspections 23
  - A1-1e(1) WHB Unit 23
  - A1-1e(2) Parking Area Unit 24
- A1-1f Containment 25
  - A1-1f(1) Secondary Containment Requirements for the WHB Unit 26
  - A1-1f(2) Secondary Containment Description 27
- A1-1g Special Requirements for Ignitable, Reactive, and Incompatible Waste 28
- A1-1h Closure 28
- A1-1i Control of Run On 28

References 29

LIST OF TABLES

Table	Title
Table A1-1	Basic Design Requirements, Principal Codes, and Standards
Table A1-2	Waste Handling Equipment Capacities
Table A1-3	RH TRU Mixed Waste Handling Equipment Capacities

LIST OF FIGURES

Figure	Title
Figure A1-1	Waste Handling Building - CH TRU Mixed Waste Container Storage and Surge Areas
Figure A1-1a	Waste Handling Building Plan (Ground Floor)
Figure A1-1b	Waste Handling Building Plan (Room 108 Detail)
Figure A1-2	Parking Area - Container Storage and Surge Areas
Figure A1-3	Standard 55-Gallon Drum (Typical)
Figure A1-4	Standard Waste Box
Figure A1-5	Ten-Drum Overpack
Figure A1-6	85-Gallon Drum
Figure A1-8a	TRUPACT-II Shipping Container for CH Transuranic Mixed Waste (Schematic)
Figure A1-8b	Typical HalfPACT Shipping Container for CH Transuranic Mixed Waste (Schematic)
Figure A1-10	Facility Pallet for Seven-Pack of Drums
Figure A1-10a	Typical Containment Pallet
Figure A1-11	Facility Transfer Vehicle, Facility Pallet, and Typical Pallet Stand
Figure A1-12	TRUPACT-II Containers on Trailer
Figure A1-13	WIPP Facility Surface and Underground CH Transuranic Mixed Waste Process Flow Diagram
Figure A1-14a	RH Bay Ground Floor
Figure A1-15	100-Gallon Drum
Figure A1-16	Facility Canister Assembly
Figure A1-16a	RH-TRU 72-B Canister Assembly
Figure A1-17a	RH Bay, Cask Unloading Room, Hot Cell, Facility Cask Loading Room
Figure A1-17b	RH Hot Cell Storage Area
Figure A1-17c	RH Canister Transfer Cell Storage Area
Figure A1-17d	RH Facility Cask Loading Room Storage Area
Figure A1-18	RH-TRU 72-B Shipping Cask on Trailer
Figure A1-19	CNS 10-160B Shipping Cask on Trailer
Figure A1-20	RH-TRU 72-B Shipping Cask for RH Transuranic Waste (Schematic)
Figure A1-21	CNS 10-160B Shipping Cask for RH Transuranic Waste (Schematic)
Figure A1-22a	RH-TRU 72-B Cask Transfer Car
Figure A1-22b	CNS 10-160B Cask Transfer Car
Figure A1-23	RH Transuranic Waste Facility Cask
Figure A1-24	RH Facility Cask Transfer Car (Side View)
Figure A1-25	CNS 10-160B Drum Carriage
Figure A1-26	Surface and Underground RH Transuranic Mixed Waste Process Flow Diagram for RH-TRU 72-B Shipping Cask

Figure A1-27 Surface and Underground RH Transuranic Mixed Waste Process Flow Diagram for CNS 10-160B Shipping Cask
Figure A1-28 Schematic of the RH Transuranic Mixed Waste Process for RH-TRU 72-B Shipping Cask
Figure A1-29 Schematic of the RH Transuranic Mixed Waste Process for CNS 10-160B Shipping Cask
Figure A1-30 RH Shielded Insert Assembly
Figure A1-31 Transfer Cell Shuttle Car
Figure A1-32 Facility Rotating Device
Figure A1-33 Typical TRUPACT-III
Figure A1-34 Typical Standard Large Box 2
Figure A1-35 Typical Yard Transfer Vehicle
Figure A1-36 Payload Transfer Station
Figure A1-37 Typical Shielded Container

(This page intentionally blank)

ATTACHMENT A1

CONTAINER STORAGE

Introduction

Management and storage of transuranic (**TRU**) mixed waste in the Waste Isolation Pilot Plant (**WIPP**) facility is subject to regulation under 20.4.1.500 NMAC. The technical requirements of 20.4.1.500 NMAC (incorporating 40 CFR §§264.170 to 264.178 are applied to the operation of the Waste Handling Building Container Storage Unit (**WHB Unit**)(Figure A1-1), and the Parking Area Container Storage Unit (**Parking Area Unit**)(Figure A1-2). This Permit Attachment describes the container storage units, the TRU mixed waste management facilities and operations, and compliance with the technical requirements of 20.4.1 NMAC. The configuration of the WIPP facility consists of completed structures, including all buildings and systems for the operation of the facility.

A1-1 Container Storage

The waste containers that will be used at the WIPP facility qualify as “containers,” in accordance with 20.4.1.101 NMAC (incorporating 40 CFR §260.10). That is, they are “portable devices in which a material is stored, transported, treated, disposed of, or otherwise handled.”

A1-1a Containers with Liquid

The Permit Treatment, Storage, and Disposal Facility (**TSDF**) Waste Acceptance Criteria (**WAC**) and the Waste Analysis Plan (Permit Attachment C) prohibit the shipment of waste to the WIPP with liquid in excess of one percent of the volume of the waste container (e.g., drum, standard waste box [**SWB**], or canister). Since the maximum amount of liquid is one percent, calculations made to determine the secondary containment as required by 20.4.1.500 NMAC (incorporating §264.175) are based on ten percent of one percent of the volume of the containers, or one percent of the largest container, whichever is greater.

A1-1b Description of Containers

20.4.1.500 NMAC (incorporating 40 CFR §264.171) requires that containers holding waste be in good condition. Waste containers shall be in good condition prior to shipment from the generator sites, i.e., containers will be of high integrity, intact, and free of surface contamination above DOE limits. The Manager of the DOE Carlsbad Field Office has the authority to suspend a generator’s certification to ship TRU mixed waste to the WIPP facility should the generator fail to meet this requirement. The containers will be certified free of surface contamination above DOE limits upon shipment. This condition shall be verified upon receipt of the waste at WIPP. The level of rigor applied in these areas to ensure container integrity and the absence of external contamination on both ends of the transportation process will ensure that waste containers entering the waste management process line at WIPP meet the applicable Resource Conservation and Recovery Act (**RCRA**) requirements for container condition.

A1-1b(1) CH TRU Mixed Waste Containers

Contact handled (**CH**) TRU mixed waste containers will be either 55-gal (208-L) drums singly or arranged into 7-packs, 85-gal (322-L) drums singly or arranged into 4-packs, 100-gal (379 L)

drums singly or arranged into 3-packs, ten-drum overpacks (**TDOP**), standard large box 2s (**SLB2**), or SWBs. A summary description of each CH TRU mixed waste container type is provided below.

Standard 55-Gallon Drums

Standard 55-gal (208-L) drums meet the requirements for U.S. Department of Transportation (**DOT**) specification 7A regulations.

A standard 55-gal (208-L) drum has a gross internal volume of 7.4 cubic feet (ft^3) (0.21 cubic meters (m^3)). Figure A1-3 shows a standard TRU mixed waste drum. One or more filtered vents (as described in Section A1-1d(1)) will be installed in the drum lid to prevent the escape of any radioactive particulates and to eliminate any potential of pressurization.

Standard 55-gal (208-L) drums are constructed of mild steel and may also contain rigid, molded polyethylene (or other compatible material) liners. These liners are procured to a specification describing the functional requirements of fitting inside the drum, material thickness and tolerances, and quality controls and required testing. A quality assurance surveillance program is applied to all procurements to verify that the liners meet the specification.

Standard 55-gal (208-L) drums may be used to collect derived waste.

Standard Waste Boxes

The SWBs meet all the requirements of DOT specification 7A regulations.

One or more filtered vents (as described in Section A1-1d(1)) will be installed in the SWB body and located near the top of the SWB to prevent the escape of any radioactive particulates and to eliminate any potential of pressurization. They have an internal volume of 66.3 ft^3 (1.88 m^3). Figure A1-4 shows a SWB.

The SWB is the largest container that may be used to collect derived waste.

Ten-Drum Overpack

The TDOP is a metal container, similar to a SWB, that meets DOT specification 7A and is certified to be noncombustible and to meet all applicable requirements for Type A packaging. The TDOP is a welded-steel, right circular cylinder, approximately 74 inches (in.) (1.9 meters (m)) high and 71 in. (1.8 m) in diameter (Figure A1-5). The maximum loaded weight of a TDOP is 6,700 pounds (lbs) (3,040 kilograms (kg)). A bolted lid on one end is removable; sealing is accomplished by clamping a neoprene gasket between the lid and the body. One or more filter vents are located near the top of the TDOP on the body to prevent the escape of any radioactive particulates and to eliminate any potential of pressurization. A TDOP may contain up to ten standard 55-gal (208-L) drums or one SWB. TDOPs may be used to overpack drums or SWBs containing CH TRU mixed waste. The TDOP may also be direct loaded with CH TRU mixed waste. Figure A1-5 shows a TDOP.

Eighty-Five Gallon Drum

The 85-gal (322-L) drums meet the requirements for DOT specification 7A regulations. An 85-gal (322-L) drum has a gross internal volume of 11.4 ft^3 (0.32 m^3). One or more filtered vents

(as described in Section A1-1d(1)) will be installed in the 85-gal drum to prevent the escape of any radioactive particulates and to eliminate any potential of pressurization.

85-gal (322-L) drums are constructed of mild steel and may also contain rigid, molded polyethylene (or other compatible material) liners. These liners are procured to a specification describing the functional requirements of fitting inside the drum, material thickness and tolerances, and quality controls and required testing. A quality assurance surveillance program is applied to all procurements to verify that the liners meet the specification.

The 85-gal (322-L) drum, which is shown in Figure A1-6, will be used for overpacking contaminated 55-gal (208 L) drums at the WIPP facility. The 85-gal drum may also be direct loaded with CH TRU mixed waste.

85-gal (322-L) drums may be used to collect derived waste.

100-Gallon Drum

100-gal (379-L) drums meet the requirements for DOT specification 7A regulations.

A 100-gal (379-L) drum has a gross internal volume of 13.4 ft^3 (0.38 m^3). One or more filtered vents (as described in Section A1-1d(1) will be installed in the drum lid or body to prevent the escape of any radioactive particulates and to eliminate any potential of pressurization.

100-gal (379-L) drums are constructed of mild steel and may also contain rigid, molded polyethylene (or other compatible material) liners. These liners are procured to a specification describing the functional requirements of fitting inside the drum, material thickness and tolerances, and quality controls and required testing. A quality assurance surveillance program is applied to all procurements to verify that the liners meet the specification.

100-gal (379-L) drums may be direct loaded.

Standard Large Box 2

The SLB2 meets the requirements of DOT specification 7A requirements. The SLB2 is a welded steel container with a gross internal volume of 261 ft^3 (7.39 m^3).

One or more filtered vents will be installed in the SLB2 body and located near the top of the SLB2 to prevent the escape of radioactive particulates and to prevent internal pressurization. Figure A1-34 shows an SLB2.

A1-1b(2) RH TRU Mixed Waste Containers

Remote-Handled (**RH**) TRU mixed waste containers include RH TRU Canisters, which are received at WIPP loaded singly in an RH-TRU 72-B cask, shielded containers, which are received in HalfPACTs, and 55-gallon drums, which are received in a CNS 10-160B cask.

RH TRU Canister

The RH TRU Canister is a steel single shell container which is constructed to be of high integrity. An example canister is depicted in Figure A1-16a. The RH TRU Canister is vented and

will have a nominal internal volume of 31.4 ft^3 (0.89 m^3) and shall contain waste packaged in small containers (e.g., drums) or waste loaded directly into the canister.

Standard 55-Gallon Drums

Standard 55-gal (208-L) drums meet the requirements for U.S. Department of Transportation (DOT) specification 7A regulations. A detailed description of a standard 55-gallon drum is provided above. Up to ten 55-gallon drums containing RH TRU mixed waste are arranged on two drum carriage units in the CNS 10-160B cask (up to five drums per drum carriage unit). The drums are transferred to an RH TRU mixed waste Facility Canister that will contain three drums.

Shielded Container

Remote-Handled TRU mixed waste received at the WIPP facility in shielded containers will be arranged as three-packs. A summary description of the shielded container is provided below. The shielded container meets the requirements for DOT specification 7A (Figure A1-37).

Shielded containers consist of a 30-gallon inner container with a gross internal volume of 4.0 ft^3 (0.11 m^3). One or more filter vents will be installed in the shielded container lid to prevent the escape of radioactive particulates and to prevent internal pressurization. The shielded container is constructed with approximately one inch of lead shielding on the sides and approximately three inches of steel on the top and bottom of the container and will be used to emplace RH TRU mixed waste. The shielding will allow it to be managed and stored as CH TRU mixed waste.

A1-1b(3) Container Compatibility

All containers will be made of steel, and some will contain rigid, molded polyethylene liners. The compatibility study, documented in Appendix C1 of the WIPP RCRA Part B Permit Application (DOE, 1997a), included container materials to assure containers are compatible with the waste. Therefore, these containers meet the requirements of 20.4.1.500 NMAC (incorporating 40 CFR §264.172).

A1-1c Description of the Container Storage Units

A1-1c(1) Waste Handling Building Container Storage Unit (WHB Unit)

The Waste Handling Building (**WHB**) is the surface facility where TRU mixed waste handling activities will take place (Figure A1-1a). The WHB has a total area of approximately 84,000 square feet (ft^2) (7,804 square meters (m^2)) of which 32,307 ft^2 (3,001 m^2) are designated for the waste handling and container storage of CH TRU mixed waste and 17,403 ft^2 (1,617 m^2) are designated for handling and storage of RH TRU mixed waste, as shown in Figures A1-1, A1-14a, and A1-17a, b, c, and d. These areas are being permitted as the WHB Unit. The concrete floors are sealed with a coating that is sufficiently impervious to the chemicals in TRU mixed waste to meet the requirements of 20.4.1.500 NMAC (incorporating 40 CFR §264.175(b)(1)).

CH Bay Surge Storage Area

The Permittees will coordinate shipments with the generator/storage sites in an attempt to minimize the use of surge storage. However, there may be circumstances causing shipments to arrive that would exceed the maximum capacity of the CH Bay Storage Area. The Permittees may use the CH Bay Surge Storage Area as specified in Part 3 (see Figure A1-1) only when the maximum capacities in the CH Bay Storage Area (except for the Shielded Storage Room) and the Parking Area Unit are reached and at least one of the following conditions is met:

- Surface or underground waste handling equipment malfunctions prevent the Permittees from moving waste to disposal locations;
- Hoisting or underground ventilation equipment malfunctions prevent the Permittees from moving waste into the underground;
- Power outages cause a suspension of waste emplacement activities;
- Inbound shipment delays are imminent because Parking Area Container Storage Unit Surge Storage is in use; or
- Onsite or offsite emergencies cause a suspension of waste emplacement activities.

The Permittees must notify NMED and those on the e-mail notification list (as specified in Permit Sections 1.11 and 3.1.1.4) upon using the CH Bay Surge Storage and provide justification for its use.

CH TRU Mixed Waste

The Contact-Handled Packages used to transport TRU mixed waste containers will be received through one of three air-lock entries to the CH Bay of the WHB Unit. The WHB heating, ventilation and air conditioning (**HVAC**) system maintains the interior of the WHB at a pressure lower than the ambient atmosphere to ensure that air flows into the WHB, preventing the inadvertent release of any hazardous or radioactive constituents contamination as the result of a contamination event. The doors at each end of the air lock are interlocked to prevent both from opening simultaneously and equalizing CH Bay pressure with outside atmospheric pressure.

- TRUPACT-II and HalfPACT Management

  The CH Bay houses two TRUPACT-II Docks (**TRUDOCKs**), each equipped with overhead cranes for opening and unloading Contact-Handled Packages. The TRUDOCKs are within the TRUDOCK Storage Area of the WHB Unit. The cranes are rated to lift the Contact-Handled Packaging lids as well as their contents. The cranes are designed to remain on their tracks and hold their load even in the event of a design-basis earthquake.

  Upon receipt and removal of CH TRU mixed waste containers from the Contact-Handled Packaging, the waste containers are required to be in good condition as provided in Permit Part 3. The waste containers will be visually inspected for physical damage (severe rusting, apparent structural defects, signs of pressurization, etc.) and leakage to ensure they are good condition prior to storage. Waste containers will also

be checked for external surface contamination. If a primary waste container is not in good condition, the Permittees will overpack the container, repair/patch the container in accordance with 49 CFR §173 and §178 (e.g., 49 CFR §173.28), or return the container to the generator. The Permittees may initiate local decontamination, return unacceptable containers to a DOE generator site or send the Contact-Handled Package to a third party contractor. Decontamination activities will not be conducted on containers which are not in good condition, or which are leaking. If local decontamination activities are opted for, the work will be conducted in the WHB Unit on the TRUDOCK. These processes are described in Section A1-1d.

Once unloaded from the Contact-Handled Packaging, CH TRU mixed waste containers (7-packs, 3-packs, 4-packs, SWBs, or TDOPs) are placed in one of two positions on the facility pallet or on a containment pallet. The waste containers are stacked, on the facility pallets (one- or two-high, depending on weight considerations). Waste on containment pallets will be stacked one-high. The use of facility or containment pallets will elevate the waste at least 6 in. (15 cm) from the floor surface. Pallets of waste will then be relocated to the CH Bay Storage Area of the WHB Unit for normal storage.

In addition, four Contact-Handled Packages, containing up to eight 7-packs, 3-packs, 4-packs, SWBs, or four TDOPs, may occupy positions at the TRUDOCKs. If waste containers are left in this area, they will be in the Contact-Handled Package with or without the shipping container lids removed. The maximum volume of waste in containers in four Contact-Handled Packages is 640 ft^3 (18.1 m^3).

- <u>TRUPACT-III Management</u>

The TRUPACT-III containing one SLB2 will be transferred to a Yard Transfer Vehicle in the Parking Area Unit using a forklift. The Yard Transfer Vehicle then transports the TRUPACT-III into the CH Bay through one of the airlocks and into Room 108 for unloading (Figure A1-1b). The TRUPACT-III is first transported to the bolting station where the overpack cover and closure lid are removed using a bolting robot, or manually as required, and a monorail hoist The TRUPACT-III is then moved to the payload transfer station where the SLB2 is removed from the TRUPACT-III.

The SLB2 will be visually inspected for physical damage in a similar manner as containers removed from a TRUPACT-II or HalfPACT (i.e., severe rusting, apparent structural defects, or signs of pressurization) and for leakage to ensure it is in good condition. The SLB2 will also be checked for external surface contamination. If the SLB2 is not in good condition, the Permittees will repair/patch the container in accordance with 49 CFR §173 and §178 (e.g., 49 CFR §173.28), or return the container to the generator. The Permittees may initiate local decontamination, return unacceptable containers to a DOE generator site or send the SLB2 to a third-party contractor. If local decontamination activities are opted for, the work will be conducted in the WHB Unit.

Once the SLB2 is unloaded from the TRUPACT-III in Room 108, it will be placed on a facility pallet and moved to a pallet stand or floor storage location in the CH Bay for storage or to the conveyance loading room for waste emplacement.

The CH Bay Storage Area, which is shown in Figure A1-1, will be clearly marked to indicate the lateral limits of the storage area. This CH Bay Storage Area will have a maximum capacity of 13 pallets (4,160 ft^3 [118 m^3]) of TRU mixed waste containers during normal operations.

The Derived Waste Storage Area of the WHB Unit is on the north wall of the CH Bay. This area will contain containers up to the volume of a SWB for collecting derived waste from all TRU mixed waste handling processes in the WHB Unit. The Derived Waste Storage Area is being permitted to allow containers in size up to a SWB to be used to accumulate derived waste. The volume of TRU mixed waste stored in this area will be up to 66.3 ft^3 (1.88 m^3). The derived waste containers in the Derived Waste Storage Area will be stored on standard drum pallets, which are polyethylene trays with a grated deck, which will elevate the derived waste containers approximately 6 in. (15 cm) from the floor surface, and provide approximately 50 gal (190 L) of secondary containment capacity.

Aisle space shall be maintained in all WHB Unit TRU mixed waste storage areas. The aisle space shall be adequate to allow unobstructed movement of fire-fighting personnel, spill-control equipment, and decontamination equipment that would be used in the event of an off-normal event. An aisle space of 44 in. (1.1 m) between facility pallets will be maintained in all WHB Unit TRU mixed waste storage areas. An aisle space of 60 in. (1.5 m) will be maintained between the west wall of the CH Bay and facility pallets.

The WHB has been designed to meet DOE design and associated quality assurance requirements. Table A1-1 summarizes basic design requirements, principal codes, and standards for the WIPP facility. Appendix D2 of the WIPP RCRA Part B Permit Application (DOE, 1997a) provided engineering design-basis earthquake and tornado reports. The design-basis earthquake report provides the basis for seismic design of WIPP facility structures, including the WHB foundation. The WIPP design-basis earthquake is 0.1 g. The WIPP design-basis tornado includes a maximum windspeed of 183 mi per hr (mi/hr) (294.5 km/hr), which is the vector sum of all velocity components. It is also limited to a translational velocity of 41 mi/hr (66 km/hr) and a tangential velocity of 124 mi/hr (200 km/hr). Other parameters are a radius of maximum wind of 325 ft (99 m), a pressure drop of 0.5 lb per $in.^2$ (3.4 kilopascals [kPa]), and a rate-of-pressure drop of 0.09 lb/$in.^2$/s (0.6 kPa/s). A design-basis flood report is not available because flooding is not a credible phenomenon at the WIPP facility. Design calculations for the probable maximum precipitation (**PMP**) event, provided in Appendix D7 of the WIPP RCRA Part B Permit Application (DOE, 1997a), illustrated run-on protection for the WIPP facility.

The WIPP facility does not lie within a 100-year floodplain. There are no major surface-water bodies within 5 mi (8 km) of the site, and the nearest river, the Pecos River, is approximately 12 mi (19 km) away. The general ground elevation in the vicinity of the surface facilities (approximately 3,400 ft [1,036 m] above mean sea level) is about 500 ft (152 m) above the riverbed and 400 ft (122 m) above the 100-year floodplain. Protection from flooding or ponding caused by PMP events is provided by the diversion of water away from the WIPP facility by a system of peripheral interceptor berms and dikes. Additionally, grade elevations of roads and surface facilities are designed so that storm water will not collect within the Property Protection Area under the most severe conditions.

The following are the major pieces of equipment that will be used to manage CH TRU mixed waste in the container storage units. A summary of equipment capacities, as required by 20.4.1.500 NMAC is included in Table A1-2.

TRUPACT-II Type B Packaging

The TRUPACT-II (Figure A1-8a) is a double-contained cylindrical shipping container 8 ft (2.4 m) in diameter and 10 ft (3 m) high. It meets NRC Type B shipping container requirements and has successfully completed rigorous container-integrity tests. The payload consists of approximately 7,265 lbs (3,300 kg) gross weight in up to fourteen 55-gal (208-L) drums, eight 85-gal (322-L) drums, six 100-gal (379-L) drums, two SWBs, or one TDOP.

HalfPACT Type B Packaging

The HalfPACT (Figure A1-8b) is a double-contained right cylindrical shipping container 7.8 ft (2.4 m) in diameter and 7.6 ft (2.3 m) high. It meets NRC Type B shipping container requirements and has successfully completed rigorous container-integrity tests. The payload consists of approximately 7,600 lbs (3,500 kg) gross weight in up to seven 55-gal (208-L) drums, one SWB, or four 85-gallon drums.

TRUPACT-III Type B Packaging

The TRUPACT-III (Figure A1-33) is an NRC-certified Type B package designed to meet the containment and shielding requirements of 10 CFR Part 71. The nominal dimensions for a TRUPACT-III are 14 feet 1 inch long, 8 feet 2 inches wide and 8 feet 8 inches high. The TRUPACT-III is specifically certified to safely transport TRU wastes packaged in an SLB2.

This package, unlike the TRUPACT-II or HalfPACT, is horizontally loaded and will be unloaded horizontally as well.

The TRUPACT-III has a bolted overpack cover that is secured to the TRUPACT-III container.

The maximum weight of a TRUPACT-III is 55,116 lbs (25,000 kg) when loaded with the maximum allowable contents of 11,486 lbs (5,210 kg).

Unloading Docks

Each TRUDOCK is designed to accommodate up to two Contact-Handled Packages. The TRUDOCK functions as a work platform, providing TRU mixed waste handling personnel easy access to the container during unloading operations (see Figure A1-1a) (Also see Drawing 41-M-001-W in Appendix D3 of the WIPP RCRA Part B Permit Application (DOE, 1997a)).

The payload transfer station serves as the unloading dock for TRUPACT-III and can accommodate a single TRUPACT-III package.

Forklifts

Forklifts may be used to transfer the Contact-Handled Packages into the WHB Unit and may be used to transfer palletized CH TRU mixed waste containers to the facility transfer vehicle. Another forklift will be used for general-purpose transfer operations. This forklift has attachments and adapters to handle individual TRU mixed waste containers, if required.

Cranes, Unloading Devices, and Adjustable Center-of-Gravity Lift Fixtures

At each TRUDOCK, an overhead bridge crane is used with a specially designed lift fixture for disassembly of the Contact-Handled Packages. Separate lifting attachments have been specifically designed to accommodate SWBs and TDOPs. The lift fixture, attached to the crane, has built-in level indicators and two counterweights that can be moved to adjust the center of gravity of unbalanced loads and to keep them level.

The TRUPACT-III is unloaded horizontally in Room 108. The Payload Transfer Station, Yard Transfer Vehicle and Facility Transfer Vehicle, or forklift are used to perform the unloading and movement functions. The Payload Transfer Station includes retractable arms that are used to position the SLB2 onto the Facility Transfer Vehicle and facility pallet.

Facility or Containment Pallets

The facility pallet is a fabricated steel unit designed to support 7-packs, 4-packs, or 3-packs of drums, SWBs, TDOPs, or an SLB2, and has a rated load of 25,000 lbs. (11,430 kg). The facility pallet will accommodate up to four 7-packs, four 3-packs, or four 4-packs of drums, four SWBs (in two stacks of two units), two TDOPs, or an SLB2. Loads are secured to the facility pallet during transport to the emplacement area. Facility pallets are shown in Figure A1-10. Fork pockets in the side of the pallet allow the facility pallet to be lifted and transferred by forklift to prevent direct contact between TRU mixed waste containers and forklift tines. This arrangement reduces the potential for puncture accidents. Facility pallets may also be moved by facility transfer vehicles. WIPP facility operational documents define the operational load of the facility pallet to ensure that the rated load of a facility pallet is not exceeded.

Containment pallets are fabricated units having a containment capacity of at least ten percent of the volume of the containers and designed to support a minimum of either a single drum, a single SWB or a single TDOP. The pallets will have a rated load capacity of equal to or greater than the gross weight limit of the container(s) to be supported on the pallet. Loads are secured to the containment pallet during transport. A typical containment pallet is shown in Figure A1-10a. Fork pockets in the side of the pallet allow the containment pallet to be lifted and transferred by forklift. WIPP facility operational documents define the operational load of the containment pallet to assure that the rated load of a containment pallet is not exceeded.

Facility Transfer Vehicle

The facility transfer vehicle is a battery or electric powered automated vehicle that either operates on tracks or has an on-board guidance system that allows the vehicle to operate on the floor of the WHB. It is designed with a flat bed that has adjustable height capability and may transfer waste payloads on facility pallets or off the facility pallet stands in the CH Bay storage area, and on and off the waste shaft conveyance by raising and lowering the bed (see Figure A1-11).

Yard Transfer Vehicle

The Yard Transfer Vehicle (Figure A1-35) transports the TRUPACT-III shipping container from the PAU into the WHB and into Room 108. The Yard Transfer Vehicle is an electric vehicle with a load capacity of 60,000 pounds.

RH TRU Mixed Waste

The RH TRU mixed waste is handled and stored in the RH Complex of the WHB Unit which comprises the following locations: RH Bay (12,552 ft^2 (1,166 m^2)), the Cask Unloading Room (382 ft^2 (36 m^2)), the Hot Cell (1,841 ft^2 (171 m^2)), the Transfer Cell (1,003 ft^2 (93 m^2)) (Figures A1-17a, b and c), and the Facility Cask Loading Room (1,625 ft^2 (151 m^2)) (Figure A1-17d).

The RH Bay (Figure A1-14a) is a high-bay area for receiving casks and subsequent handling operations. The trailer carrying the RH-TRU 72-B or CNS 10-160B shipping cask (Figures A1-18, A1-19, A1-20 and A1-21) enters the RH Bay through a set of double doors on the east side of the WHB. The RH Bay houses the Cask Transfer Car. The RH Bay is served by the RH Bay Overhead Bridge Crane used for cask handling and maintenance operations. Storage in the RH Bay occurs in the RH-TRU 72-B or CNS 10-160B casks. The storage occurs after the trailer containing the cask is moved into the RH Bay and prior to moving the cask into the Cask Unloading Room to stage the waste for disposal operations. A maximum of two loaded casks and one 55-gallon drum for derived waste (156 ft^3 (4.4 m^3)) may be stored in the RH Bay.

The Cask Unloading Room (Figure A1-17a) provides for transfer of the RH-TRU 72-B cask to the Transfer Cell, or the transfer of drums from the CNS 10-160B cask to the Hot Cell. Storage in the Cask Unloading Room will occur in the RH-TRU 72-B or CNS 10-160B casks. Storage in this area typically occurs at the end of a shift or in an off-normal event that results in the suspension of waste handling operations. A maximum of one cask (74 ft^3 (2.1 m^3)) may be stored in the Cask Unloading Room.

The Hot Cell (Figure A1-17b) is a concrete shielded room in which drums of RH TRU mixed waste will be transferred remotely from the CNS 10-160B cask, staged in the Hot Cell, and loaded into a Facility Canister. The loaded Facility Canister is then lowered from the Hot Cell into the Transfer Cell Shuttle Car containing a Shielded Insert. Storage in the Hot Cell occurs in either drums or Facility Canisters. Drums that are stored are either on the drum carriage unit that was removed from the CNS 10-160B cask or in a Facility Canisters. A maximum of 12 55-gallon drums and one 55-gallon drum for derived waste (94.9 ft^3 (2.7 m^3)) may be stored in the Hot Cell.

The Transfer Cell (Figure A1-17c) houses the Transfer Cell Shuttle Car, which moves the RH-TRU 72-B cask or Shielded Insert into position for transferring the canister to the Facility Cask. Storage in this area typically occurs at the end of a shift or in an off-normal event that results in the suspension of a waste handling evolution. A maximum of one canister (31.4 ft^3 (0.89 m^3)) may be stored in the Transfer Cell in the Transfer Cell Shuttle Car.

The Facility Cask Loading Room (Figure A1-17d) provides for transfer of a canister to the Facility Cask for subsequent transfer to the waste shaft conveyance and to the Underground Hazardous Waste Disposal Unit (**HWDU**). The Facility Cask Loading Room also functions as an air lock between the Waste Shaft and the Transfer Cell. Storage in this area typically occurs at the end of a shift or in an off-normal event that results in the suspension of waste handling operations. A maximum of one canister (31.4 ft^3 (0.89 m^3)) may be stored in the Facility Cask (Figure A1-23) in the Facility Cask Loading Room.

Following is a description of major pieces of equipment that are used to manage RH TRU mixed waste in the WHB Unit. A summary of equipment capacities, as required by 20.4.1.500 NMAC, is included in Table A1-3.

Casks

The RH-TRU 72-B cask (Figure A1-20) is a cylinder designed to meet U.S. Department of Transportation (**DOT**) Type B shipping container requirements. It consists of a separate inner vessel within a stainless steel, lead-shielded outer cask protected by impact limiters at each end, made of stainless steel skins filled with polyurethane foam. The inner vessel is made of stainless steel and provides an internal containment boundary and a cavity for the payload. Neither the outer cask nor the inner vessel is vented. Payload capacity of each RH-TRU 72-B shipping cask is 8,000 lbs (3,628 kg). The payload consists of a canister of RH TRU mixed waste, which may contain up to 31.4 ft^3 (0.89 m^3) of directly loaded waste or waste in smaller containers.

The CNS 10-160B cask (Figure A1-21) is designed to meet DOT Type B container requirements and consists of two carbon steel shells and a lead shield, welded to a carbon steel bottom plate. A 12-gauge stainless steel thermal shield surrounds the cask outer shell, which is equipped with two steel-encased, rigid polyurethane foam impact limiters attached to the top and bottom of the cask. The CNS 10-160B cask is not vented. Payload capacity of each CNS 10-160B cask is 14,500 lbs (6,577 kg). The payload consists of up to ten 55-gallon drums.

Shielded Insert

The Shielded Insert (Figure A1-30) is specifically designed to be used in the Transfer Cell to hold and transport loaded Facility Canisters from the Hot Cell until loaded into the Facility Cask. The Shielded Insert, designed and constructed similar to the RH-TRU 72-B shipping cask, has a 29 in. inside diameter with an inside length of 130.5 in. to accommodate the Facility Canister, which is 28.5 in. in diameter by 117.5 in. long. The Shielded Insert is installed on and removed from the Transfer Cell Shuttle Car in the same manner as the RH-TRU 72-B shipping cask.

CNS 10-160B Drum Carriage

The CNS 10-160B drum carriage (Figure A1-25) is a steel device used to handle drums in the CNS 10-160B cask. The drum carriages are stacked two high in the CNS 10-160B cask during shipment. They are removed from the cask using a below-the-hook lifting device termed a pentapod. The drum carriage is rated to lift up to five drums with a maximum weight of 1000 pounds each.

RH Bay Overhead Bridge Crane

In the RH Bay, an overhead bridge crane is used to lift the cask from the trailer and place it on the Cask Transfer Car. It is also used to remove the impact limiters from the casks and the outer lid of the RH-TRU 72-B cask.

Cask Lifting Yoke

The lifting yoke is a lifting fixture that attaches to the RH Bay Overhead Bridge Crane and is designed to lift and rotate the RH-TRU 72-B cask onto the Cask Transfer Car.

Cask Transfer Cars

The Cask Transfer Cars (Figures A1-22a and A1-22b) are self-propelled, rail-guided vehicles that transport casks between the RH Bay and the Cask Unloading Room.

6.25 Ton Grapple Hoist

A 6.25 Ton Grapple Hoist is used to hoist the canister from the Transfer Cell Shuttle Car into the Facility Cask.

Facility Canister

The Facility Canister is a cylindrical container designed to hold three 55-gallon drums of either RH TRU waste or dunnage (Figure A1-16).

Facility Cask

The Facility Cask body consists of two concentric steel cylinders. The annulus between the cylinders is filled with lead, and gate shield valves are located at either end. Figure A1-23 provides an outline configuration of the Facility Cask. The canister is placed inside the Facility Cask for shielding during canister transfer from the RH Complex to the Underground HWDU for emplacement.

Facility Cask Transfer Car

The Facility Cask Transfer Car (Figure A1-24) is a self-propelled rail car that is used to move the Facility Cask between the Facility Cask Loading Room and the Shaft Station in the underground.

Hot Cell Bridge Crane

The Hot Cell Bridge Crane, outfitted with a rotating block and the Hot Cell Facility Grapple, will be used to lift the CNS 10-160B lid and the drum carriage units from the cask located in the Cask Unloading Room, into the Hot Cell. The Hot Cell Bridge Crane is also used to lift the empty Facility Canisters into place within the Hot Cell, move loaded drums into the Facility Canister, and lower loaded Facility Canisters into the Transfer Cell.

Overhead Powered Manipulator

The Overhead Powered Manipulator is used in the Hot Cell to lift individual drums from the drum carriage unit and lower each drum into the Facility Canister and support miscellaneous Hot Cell operations.

Manipulators

There is a maximum of two operational sets of fixed Manipulators in the Hot Cell. The Manipulators collect swipes of drums as they are being lifted from the drum carriage unit and transfer the swipes to the Shielded Material Transfer Drawer and support Hot Cell operations.

Shielded Material Transfer Drawer

The Shielded Material Transfer Drawer is used to transfer swipe samples obtained by the fixed Manipulators to the Hot Cell Gallery for radiological counting and transferring small equipment into and out of the Hot Cell.

Closed-Circuit Television Cameras

The Closed-Circuit Television Camera system is used to monitor operations throughout the Hot Cell and Transfer Cell. These cameras are used to perform inspections of waste containers and waste management areas. This camera system is operated from the shielded room in the Facility Cask Loading Room and Hot Cell Gallery. The camera system has a video recording capability as an operational aid.

Transfer Cell Shuttle Car

The Transfer Cell Shuttle Car (Figure A1-31) positions the loaded RH-TRU 72-B cask and Shielded Insert within the Transfer Cell.

Cask Unloading Room Crane

The Cask Unloading Room Crane lifts and suspends the RH-TRU 72-B cask or Shielded Insert from the Transfer Car and lowers the cask or Shielded Insert into the Transfer Cell Shuttle Car.

Facility Cask Rotating Device

The Facility Cask Rotating Device, a floor mounted hydraulically operated structure, is designed to rotate the Facility Cask from the horizontal position to the vertical position for waste canister loading and then back to the horizontal position after the waste canister has been loaded into the Facility Cask (Figure A1-32).

A1-1c(2) Parking Area Container Storage Unit (Parking Area Unit)

The parking area south of the WHB (see Figure A1-2) will be used for storage of waste containers within sealed shipping containers awaiting unloading. The area extending south from the WHB within the fenced enclosure identified as the Controlled Area on Figure A1-2 is defined as the Parking Area Unit. The Parking Area Unit provides storage space for up to 6,734 ft^3 (191 m^3) of TRU mixed waste, contained in up to 40 loaded Contact-Handled Packages and 8 Remote-Handled Packages. Secondary containment and protection of the waste containers from standing liquid are provided by the Contact-Handled or Remote-Handled Packaging. Wastes placed in the Parking Area Unit will remain sealed in their Contact-Handled or Remote-Handled Packages, at all times while in this area.

The Nuclear Regulatory Commission (**NRC**) Certificate of Compliance requires that sealed Contact-Handled or Remote-Handled Packages which contain waste be vented every 60 days to avoid unacceptable levels of internal pressure. During normal operations the maximum residence time of any one container in the Parking Area Unit is typically five days. Therefore, during normal waste handling operations, no Contact-Handled or Remote-Handled Packages will require venting while located in the Parking Area Unit. Any off-normal event which results in the need to store a waste container in the Parking Area Unit for a period of time approaching fifty-nine (59) days shall be handled in accordance with Section A1-1e(2) of this Permit Attachment. Under no circumstances shall a Contact-Handled or Remote-Handled Package be stored in the Parking Area Unit for more than fifty-nine (59) days after the date that the inner containment vessel of the Contact-Handled or Remote-Handled Package was sealed at the generator site.

Parking Area Surge Storage

The Permittees will coordinate shipments with the generator/storage sites in an attempt to minimize the use of surge storage. However, there may be circumstances causing shipments to arrive that would exceed the maximum capacity of the Parking Area. The Permittees may use the Parking Area Surge Storage as specified in Part 3 (see Figure A1-2) only when the maximum capacity in the Parking Area is reached and at least one of the following conditions is met:

- Surface or underground waste handling equipment malfunctions prevent the Permittees from moving waste to disposal locations;
- Hoisting or underground ventilation equipment malfunctions prevent the Permittees from moving waste into the underground;
- Power outages cause a suspension of waste emplacement activities;
- Inbound shipment delays are imminent because the Parking Area is full (not applicable to RH TRU waste shipments); or
- Onsite or offsite emergencies cause a suspension of waste emplacement activities.

The Permittees must notify NMED and those on the e-mail notification list (as specified in Permit Sections 1.11 and 3.1.2.4) upon using the Parking Area Surge Storage and provide justification for its use.

A1-1d Container Management Practices

20.4.1.500 NMAC (incorporating 40 CFR §264.173) requires that containers be managed in a manner that does not result in spills or leaks. Containers are required to be closed at all times, unless waste is being placed in the container or removed. Because containers at the WIPP will contain radioactive waste, safety concerns require that containers be continuously vented to obviate the buildup of gases within the container. These gases could result from radiolysis, which is the breakdown of moisture by radiation. The vents, which are nominally 0.75 in. (1.9 centimeters [cm]) in diameter, are generally installed on or near the lids of the containers. These vents are filtered so that gas can escape while particulates are retained.

TRU mixed waste containers, containing off-site waste, are never opened at the WIPP facility. Derived waste containers are kept closed at all times unless waste is being added or removed.

Off-normal events could interrupt normal operations in the waste management process line. These off normal events fall into the following categories:

- Waste management system equipment malfunctions
- Waste shipments with unacceptable levels of surface contamination
- Hazardous Waste Manifest discrepancies that are not immediately resolved
- A suspension of emplacement activities for regulatory reasons

Shipments of waste from the generator sites will be stopped in any event which results in an interruption to normal waste handling operations that exceeds three days.

Prior to receipt of TRU mixed waste at the WIPP facility, waste operators will be thoroughly trained in the safe use of TRU mixed waste handling and transport equipment. The training will include both classroom training and on-the-job training.

A1-1d(1) Derived Waste

The WIPP facility operational philosophy is to introduce no new hazardous chemical components into TRU mixed waste or TRU mixed waste residues that could be present in the controlled area. This will be accomplished principally through written procedures and the use of Safe Work Permits (**SWP**)[1] and Radiological Work Permits (**RWP**)[2] which govern the activities within a controlled area involving TRU mixed waste. The purpose of this operating philosophy is to avoid generating TRU mixed waste that is compositionally different than the TRU mixed waste shipped to the WIPP facility for disposal.

Some additional TRU mixed waste, such as used personal protective equipment, swipes, and tools, may result from decontamination operations and off-normal events. Such waste will be assumed to be contaminated with RCRA-regulated hazardous constituents in the TRU mixed waste containers from which it was derived. Derived waste may be generated as the result of decontamination activities during the waste handling process. Should decontamination activities be performed, water and a cleaning agent such as those listed in Permit Attachment D will be used. Derived waste will be considered acceptable for management at the WIPP facility, because any TRU mixed waste shipped to the facility will have already been determined to be acceptable and because no new constituents will be added. Data on the derived waste will be entered into the WWIS database. Derived waste will be contained in standard DOT approved Type A containers.

The Safety Analysis Report (DOE 1997b) for packaging requires the lids of TRU mixed waste containers to be vented through high efficiency particulate air (**HEPA**)-grade filters to preclude container pressurization caused by gas generation and to prevent particulate material from escaping. Filtered vents used in CH TRU mixed waste containers (55-gal (208-L) drums, 85-gal (322 L) drums, 100-gal (379-L) drums, TDOPs, and SWBs) have an orifice approximately 0.375-in. (9.53-millimeters) in diameter through which internally generated gas may pass. The filter media can be any material (e.g., composite carbon, sintered metal).

As each derived waste container is filled, it will be closed with a lid containing a HEPA-grade. filter and moved to an Underground Hazardous Waste Disposal Unit (**HWDU**) using the same equipment used for handling TRU mixed waste.

---

[1] SWPs are prepared to assure that any hazardous work (not already covered by a procedure) is performed with due precaution. SWPs are issued by the Permittees after a job supervisor completes the proper form detailing the job location, work description, personnel involved, specific hazards involved, and protective requirements. The Permittees review the form, check on the adequacy of the protective measures, and if sufficient, approve the work permit. Conditions of the SWPs must be met while any hazardous work is proceeding. Examples of activities covered by the SWP program include confined space entry, overhead work, and work on energized equipment.

[2] RWPs are used to control entry into and performance of work within a controlled area (**CA**). Managers responsible for work within a CA must generate a work permit that specifies the work scope, limiting conditions, dosimetry, respiratory protection, protective clothing, specific worker qualifications, and radiation safety technician support. RWPs are approved by the Permittees after thorough review. No work can proceed in a CA without a valid RWP.

A1-1d(2) CH TRU Mixed Waste Handling

CH TRU mixed waste containers will arrive by tractor-trailer at the WIPP facility in sealed shipping containers (e.g., TRUPACT-IIs, HalfPACTs, or TRUPACT-IIIs) (see Figure A1-12), at which time they will undergo security and radiological checks and shipping documentation reviews. A forklift will remove the Contact-Handled Packages which will be transported by forklift or Yard Transfer Vehicle through an air lock that is designed to maintain differential pressure in the WHB. The forklift will place the shipping containers at either one of the two TRUDOCKs in the TRUDOCK Storage Area of the WHB Unit or the Yard Transfer Vehicle will locate the TRUPACT-III at the bolting station in Room 108. An external survey of the Contact-Handled Package inner vessel (Figure A1-8a and A1-8b) will be performed as the outer containment vessel lid is removed. The inner vessel lid or closure lid will be lifted under the Vent Hood System (**VHS**), and the contents will be surveyed during and after this process is complete. The VHS[3] is attached to the Contact-Handled Package to provide atmospheric control and confinement of headspace gases at their source. It also prevents potential personnel exposure and facility contamination due to the spread of radiologically contaminated airborne dust particles and minimizes personnel exposure to VOCs.

Contamination surveys at the WIPP facility are based in part on radiological surveys used to indicate potential releases of hazardous constituents from containers by virtue of detection of radioactive contamination (see Permit Attachment G3). Radiological surveys may be applicable to most hazardous constituent releases except the release of gaseous VOCs from TRU mixed waste containers. Radiological surveys provide the WIPP facility with a very sensitive method of indicating the potential release of nongaseous hazardous constituents through the use of surface sampling (swipes) and radioactivity counting. Radiological surveys are used in addition to the more conventional techniques such as visual inspection to identify spills.

Under normal operations, it is not expected that the waste containers will be externally contaminated or that removable surface contamination on the shipping package or the waste containers will be in excess of the DOE's free release limits (i.e.; < 20 disintegrations per minute (**dpm**)[4] per 100 cm^2 alpha or < 200 dpm per 100 cm^2 beta/gamma). In such a case, no further decontamination action is needed. The shipping package and waste container will be handled through the normal process. However, should the magnitude of contamination exceed the free release limits, yet still fall within the criteria for small area "spot" decontamination (i.e., less than or equal to 100 times the free release limit and less than or equal to 6 ft^2 [0.56 m^2]), the shipping package or the waste container will be decontaminated. Decontamination activities will not be

---

[3] The TRU mixed waste container headspace may contain radiologically contaminated airborne dust particles.

1. Without the VHS, a potential mechanism will exist to spread contamination (if present) in the immediate CH TRU mixed waste handling area, because lid removal will immediately expose headspace gases to prevailing air currents induced by the building ventilation system.
2. With the VHS, a confined and controlled set of prevailing air currents will be induced by the system blower. The VHS will function as a local exhaust system to effectively control radiologically contaminated airborne dust particles (and VOCs) at essentially atmospheric pressure conditions.
   Functionally, the VHS will draw the TRU mixed waste container headspace gases, convey them through a HEPA filter, and ultimately duct them through the WHB exhaust ventilation system. VOCs will pass through the HEPA filter and will be conveyed to the ventilation exhaust duct system. The system principally consists of a functional aggregation of 1) vent hood assembly, 2) HEPA filter assemblies (to capture any airborne radioactive particles), 3) blower (to provide forced airflow), 4) ductwork, and 5) flexible hose.

[4] The unit "dpm" stands for "disintegration per minute" and is the rate of emission by radioactive material as determined by correcting the counts per minute observed by an appropriate detector for background, efficiency, and geometric factors associated with the instrumentation.

conducted on containers which are not in good condition, or containers which are leaking. Containers which are not in good condition, and containers which are leaking, will be overpacked, repaired/patched in accordance with 49 CFR §173 and §178 (e.g., 49 CFR §173.28), or returned to the generator. In addition, if during the waste handling process at the WIPP a waste container is breached, it will be overpacked, repaired/patched in accordance with 49 CFR §173 and §178 (e.g., 49 CFR §173.28), or returned to the generator. Should WIPP structures or equipment become contaminated, waste handling operations in the affected area will be immediately suspended.

Decontamination activities will use water and cleaning agents (see Permit Attachment D) so as to not generate any waste that cannot be considered derived waste. Items that are radiologically contaminated are also assumed to be contaminated with the hazardous wastes that are in the container involved in the spill or release. A complete listing of these waste components can be obtained from the WIPP Waste Information System (**WWIS**), as described in Permit Attachment C, for the purpose of characterizing derived waste.

It is assumed that the process of decontamination will remove the hazardous waste constituents along with the radioactive waste constituents. To provide verification of the effectiveness of the removal of hazardous waste constituents, once a contaminated surface is demonstrated to be radiologically clean, the “swipe” will be sent for analysis for hazardous constituents. The use of these confirmation analyses is as follows:

For waste containers, the analyses becomes documentation of the condition of the container at the time of emplacement. The presence of hazardous waste constituents on a container after decontamination will be at trace levels and will likely not be visible and will not pose a threat to human health or the environment. These containers will be placed in the underground without further action once the radiological contamination is removed unless there is visible evidence of hazardous waste spills or hazardous waste on the container and this contamination is considered likely to be released prior to emplacement in the underground.

For area contamination, once the area is cleaned up and is shown to be radiologically clean, it will be sampled for the presence of hazardous waste residues. If the area is large, a sampling plan will be developed which incorporates the guidance of EPA’s SW 846 in selecting random samples over large areas. Selection of constituents for sampling analysis will be based on information (in the WWIS) about the waste that was spilled and information on cleanup procedures. If the area is small, swipes will be used. If the results of the analysis show that residual contamination remains, a decision will be made whether further cleaning will be beneficial or whether final clean up shall be deferred until closure. For example, if hazardous constituents react with the floor coating and are essentially nonremovable without removing the coating, then clean up will be deferred until closure when the coatings will be stripped. In any case, appropriate notations will be entered into the operating record to assure proper consideration of formerly contaminated areas at the time of closure. Furthermore, measures such as covering, barricading, and/or placarding will be used as needed to mark areas that remain contaminated.

Small area decontamination, if needed, will occur in the area in which it is detected for contamination that is less than 6 ft^2 (0.56 m^2) in area and is less than 100 times the free release limit. The free release limit is defined by DOE Orders as alpha contamination less than 20 dpm/100 cm^2 and beta-gamma contamination less than 200 dpm/100 cm^2. Overpacking would occur in the event the WIPP staff damages an otherwise intact container during handling

activities. In such a case, a radiological boundary will be established, inside which all activities are carefully controlled in accordance with the protocols for the cleanup of spills or releases. A plan of recovery will be developed and executed, including overpacking or repairing the damaged container. The overpacked or repaired container will be properly labeled and sent underground for disposal. The area will then be decontaminated and verified to be free of contamination using both radiological and hazardous waste sampling techniques (essentially, this is done with “swipes” of the surface for counting in sensitive radiation detection equipment or, if no radioactivity is present, by analysis for hazardous waste by an offsite laboratory).

In the event a large area contamination is discovered within a Contact-Handled Package during unloading, the waste will be left in the Contact-Handled Package and the shipping container will be resealed. The DOE considers such contamination problems the responsibility of the shipping site. Therefore, the shipper will have several options for disposition. These are as follows:

- The Contact-Handled Package can be returned to the shipper for decontamination and repackaging of the waste. Such waste would have to be re-approved prior to shipment to the WIPP.

- Shipment to another DOE site for management in the event the original shipper does not have suitable facilities for decontamination. If the repairing site wishes to return the waste to WIPP, the site will have to meet the characterization requirements of the WAP.

- The waste could go to a third (non-DOE) party for decontamination. In such cases, the repaired shipment would go to the original shipper and be recertified prior to shipment to the WIPP.

Written procedures specify materials, protocols, and steps needed to put an object into a safe configuration for decontamination of surfaces. A RWP will always be prepared prior to decontamination activities. TRU mixed waste products from decontamination will be managed as derived waste.[5]

The TRUPACT-II may hold up to two 7-packs, two 4-packs, two 3-packs, two SWBs, or one TDOP. A HalfPACT may hold seven 55-gal (208-L) drums, one SWB, or four 85-gallon drums. The TRUPACT-III holds a single SLB2. An overhead bridge crane or Facility Transfer Vehicle will be used to remove the contents of the Contact-Handled Package and place them on a facility pallet. The containers will be visually inspected for physical damage (severe rusting, apparent structural defects, signs of pressurization, etc.) and leakage to ensure they are in good condition prior to storage. Waste containers will also be checked for external surface contamination. If a primary waste container is not in good condition, the Permittees will overpack the container, repair/patch the container in accordance with 49 CFR §173 and §178 (e.g., 49 CFR §173.28), or return the container to the generator.

[5] Note that the DOE had previously proposed use of an Overpack and Repair Room to deal with major decontamination and overpacking activities. The DOE has eliminated the need for this area by: 1) limiting the size of contamination events that will be dealt with as described in this section, and 2) by performing overpacking at the point where a need for overpacking is identified instead of moving the waste to another area of the WHB. This strategy minimizes the spread of contamination.

For inventory control purposes, TRU mixed waste container identification numbers will be verified against the Uniform Hazardous Waste Manifest and the WWIS. Inconsistencies will be resolved with the generator before TRU mixed waste is emplaced. Discrepancies that are not resolved within 15 days will be reported to the NMED in accordance with 20.4.1.500 NMAC (incorporating 40 CFR §264.72).

Each facility pallet has two recessed pockets to accommodate two sets of 7-packs (see Figure A1-10), two sets of 4-packs, two sets of 3-packs, or two SWBs stacked two-high, two TDOPs, or any combination thereof. Each facility pallet will accommodate one SLB2. Each stack of waste containers will be secured prior to transport underground. A forklift or the facility transfer vehicle will transport the loaded facility pallet to the conveyance loading room located adjacent to the Waste Shaft. The conveyance loading room serves as an air lock between the CH Bay and the Waste Shaft, preventing excessive air flow between the two areas. The facility transfer vehicle will be driven onto the waste shaft conveyance deck, where the loaded facility pallet will be transferred to the waste shaft conveyance, and the facility transfer vehicle will be backed off. Containers of CH TRU mixed waste (55-gal (208 L) drums, SWBs, 85-gal (322 L) drums, 100-gal (379-L) drums, and TDOPs) can be handled individually, if needed, using the forklift and lifting attachments (i.e., drum handlers, parrot beaks).

The waste shaft conveyance will lower the loaded facility pallet to the Underground HWDUs. Figure A1-13 is a flow diagram of the CH TRU mixed waste handling process.

A1-1d(3) RH TRU Mixed Waste Handling

The RH TRU mixed waste that is not in a shielded container will be received in the RH-TRU 72-B cask or CNS 10-160B cask loaded on a trailer, as illustrated in process flow diagrams in Figures A1-26 and A1-27, respectively. These are shown schematically in Figures A1-28 and A1-29. Remote-Handled TRU mixed waste received in shielded containers will be managed and stored as CH TRU mixed waste. Upon arrival at the gate, external radiological surveys, security checks, shipping documentation reviews are performed and the Uniform Hazardous Waste Manifest is signed. The generator's copy of the Uniform Hazardous Waste Manifest is returned to the generator. Should the results of the contamination survey exceed acceptable levels, the shipping cask and transport trailer remain outside the WHB in the Parking Area Unit, and the appropriate radiological boundaries (i.e., ropes, placards) are erected around the shipping cask and transport trailer. A determination will be made whether to return the cask to the originating site or to decontaminate the cask.

Following cask inspections, the shipping cask and trailer are moved into the RH Bay or held in the Parking Area Unit. The waste handling process begins in the RH Bay where the impact limiter(s) are removed from the shipping cask while it is on the trailer. Additional radiological surveys are conducted on the end of the cask previously protected by the impact limiter(s) to verify the absence of contamination. The cask is unloaded from the trailer using the RH Bay Overhead Bridge Crane and placed on a Cask Transfer Car.

Differential air pressure between the RH TRU mixed waste handling locations in the RH Complex protects workers and prevents potential spread of contamination during handling of RH TRU mixed waste. Airflow between key rooms in the WHB is controlled by maintaining differential pressures between the rooms. The CH Receiving Bay is maintained with a negative pressure relative to outside atmosphere. The RH Receiving Bay is maintained with a requirement to be positive pressure relative to the CH Receiving Bay. The RH Hot Cell is

maintained with a negative differential pressure relative to the RH Receiving Bay. The Hot Cell ventilation is exhausted through high-efficiency particulate air filters prior to venting through the WHB filtered exhaust.

RH-TRU 72-B Cask Unloading

The Cask Transfer Car then moves the RH-TRU 72-B cask to a work stand in the RH Bay. The work stand allows access to the head area of the RH-TRU 72-B cask for conducting radiological surveys, performing physical inspections or minor maintenance, and decontamination, if necessary. The outer lid bolts on the RH-TRU 72-B cask are removed, and the outer lid is removed to provide access to the lid of the cask inner containment vessel. The RH-TRU 72-B cask is moved into the Cask Unloading Room by a Cask Transfer Car and is positioned under the Cask Unloading Room Bridge Crane. The Cask Unloading Room Bridge Crane attaches to the RH-TRU 72-B cask and lifts and suspends the RH-TRU 72-B cask to clear the Cask Transfer Car. The RH-TRU 72-B cask is aligned over the Cask Unloading Room port.

The Cask Unloading Room shield valve is opened, and the cask is lowered through the port into the Transfer Cell Shuttle Car. The Cask Unloading Room Bridge Crane is unhooked and retracted, and the Cask Unloading Room shield valve is closed. After the cask is lowered into the Transfer Cell Shuttle Car, the bolts on the lid of the cask inner containment vessel are loosened by a robotic Manipulator. The Transfer Cell Shuttle Car is then aligned directly under the Transfer Cell shield valve in preparation for removing the inner vessel lid and transferring the canister to the Facility Cask. Operations in the Transfer Cell are monitored by closed-circuit video cameras.

Using the remotely-operated fixed 6.25 Ton Grapple Hoist in the Facility Cask Loading Room, the inner vessel lid is lifted clear of the RH-TRU 72-B cask, and the robotic Manipulator takes swipe samples and places them in a swipe delivery system for counting outside the Transfer Cell. If found to be contaminated above acceptable levels, the Permittees have the option to decontaminate or return the RH TRU Canister to the generator/storage site or another site for remediation. If no contamination is found, the Transfer Cell Shuttle Car moves a short distance, and the inner vessel lid is lowered onto a stand on the Transfer Cell Shuttle Car. The canister is transferred to the Facility Cask as described below.

CNS 10-160B Cask Unloading

After the lid bolts are removed, the CNS 10-160B cask is moved using the Cask Transfer Car from the RH Bay into the Cask Unloading Room and centered beneath the Hot Cell shield plug port. The Cask Unloading Room shield door is closed, and the inner and outer Hot Cell shield plugs are removed simultaneously and set aside on the floor of the Hot Cell using the remotely operated Hot Cell Bridge Crane. The Hot Cell Bridge Crane is then lowered through the Hot Cell port and is connected to the CNS 10-160B cask lid rigging or lifting device. The Hot Cell Bridge Crane lifts the CNS 10-160B cask lid through the Hot Cell port and sets the lid aside on the Hot Cell floor.

Operations in the Hot Cell are monitored by closed-circuit television cameras. The drum carriage unit lifting fixture (hereafter referred to as lifting fixture) is attached to the Hot Cell Bridge Crane and lowered through the Hot Cell port. The lifting fixture is connected to the upper drum carriage unit contained in the CNS 10-160B cask. The Hot Cell Bridge Crane lifts the upper drum carriage unit from the CNS 10-160B cask through the port into the Hot Cell and sets

it near the Hot Cell inspection station. The Hot Cell Bridge Crane again lowers the lifting fixture through the Hot Cell port and connects to the lower drum carriage unit. The Hot Cell Bridge Crane lifts the lower drum carriage unit from the CNS 10-160B cask through the port into the Hot Cell and sets it near the upper drum carriage unit.

The Hot Cell Bridge Crane lifts the CNS 10-160B cask lid from the Hot Cell floor, lowers it through the Hot Cell port and onto the top of the CNS 10-160B cask. The inner and outer Hot Cell shield plugs are replaced simultaneously. The Cask Unloading Room shield door is opened, and the CNS 10-160B cask is moved into the RH Bay using the Cask Transfer Car. The CNS 10-160B cask is inspected and surveyed, the lid and impact limiter are reinstalled on the CNS 10-160B cask, and it is prepared for transportation off-site.

The Hot Cell Bridge Crane connects to an empty Facility Canister, places it into a sleeve at the inspection station, and removes the canister lid. The Overhead Powered Manipulator or Hot Cell Crane lifts one drum from the drum carriage unit. The Hot Cell Manipulators collect swipe samples from the drum and transfer the swipes via the Transfer Drawer to the Hot Cell Gallery for counting. If the 55-gallon drums are contaminated, the Permittees may decontaminate the 55-gallon drums or return them to the generator/storage site or another site for remediation. The drum identification number is recorded, and the recorded numbers are verified against the WWIS. If there are any discrepancies, the drum(s) in question are stored within the Hot Cell, and the generator/storage site is contacted for resolution. Discrepancies that are not resolved within 15 days will be reported to the NMED as required by 20.4.1.500 NMAC (incorporating 40 CFR §264.72).

Either the Overhead Powered Manipulator or Hot Cell Bridge Crane lowers the drum into the Facility Canister. This process is repeated to place three drums in the Facility Canister. The Hot Cell Bridge Crane or powered Manipulator lifts the canister lid and places it onto the Facility Canister. The lid is locked in place using a Manipulator. Each CNS 10-160B cask shipment will contain up to ten drums. Drums will be managed in sets of three. If there is a tenth drum, it will be placed in a Facility Canister or stored until WIPP receipt of the next CNS 10-160B cask shipment. The Hot Cell Bridge Crane lifts the Facility Canister and lowers it into the Transfer Cell.

To prepare to transfer a loaded Facility Canister from the Hot Cell to the Transfer Cell, a Shielded Insert is placed onto a Cask Transfer Car in the RH Bay. The Cask Transfer Car is then moved into the Cask Unloading Room and positioned under the Cask Unloading Room Bridge Crane. The Bridge Crane attaches to the Shielded Insert. The Cask Unloading Room Bridge Crane lifts and suspends the Shielded Insert clear of the Cask Transfer Car. The Shielded Insert is aligned over the Cask Unloading Room port. The floor valve is opened, and the Shielded Insert is lowered into the Transfer Cell Shuttle Car. The Cask Unloading Room Bridge Crane is unhooked and retracted, and the Cask Unloading Room shield valve is closed. The Shielded Insert is positioned under the Hot Cell port.

The Hot Cell Bridge Crane lifts a loaded, closed Facility Canister and positions it over the Hot Cell port. The Hot Cell shield valve is opened, and the crane lowers the Facility Canister through the port into the Shielded Insert positioned in the Transfer Cell Shuttle Car in the Transfer Cell. The Hot Cell Bridge Crane is disconnected from the Facility Canister and raised until the crane hook clears the Hot Cell shield valve. The Hot Cell shield valve is then closed.

Transfer of Disposal Canister into the Facility Cask

The transfer of a canister into the Facility Cask from the Transfer Cell is monitored by closed-circuit television cameras. The Transfer Cell Shuttle Car positions the RH-TRU 72-B cask or Shielded Insert under the Facility Cask Loading Room port and the shield valve is opened. Then the remotely operated 6.25 Ton Grapple Hoist attaches to the canister, and the canister is lifted through the open shield valve into the vertically-oriented Facility Cask located on the Cask Transfer Car in the Facility Cask Loading Room. During this cask-to-cask transfer, the telescoping port shield is in contact with the underside of the Facility Cask to assure shielding continuity, as does the shield bell located above the Facility Cask.

For canisters received at the WIPP from the generator site in a RH-TRU 72-B cask, the identification number is verified using cameras, which also provide images of the canister surfaces during the lifting operation. Identification numbers are verified against the WWIS. If there are any discrepancies, the canister is returned to the RH-TRU 72-B cask, returned to the Parking Area Unit, and the generator is contacted for resolution. Discrepancies that are not resolved within 15 days will be reported to the NMED as required by 20.4.1.500 NMAC (incorporating 40 CFR §264.72). As the canister is being lifted from the RH-TRU 72-B cask into the Facility Cask, additional swipe samples may be taken.

Transfer of the Canister to the Underground

When the canister is fully within the Facility Cask, the lower shield valve is closed. The 6.25 Ton Grapple Hoist detaches from the canister and is raised until the 6.25 Ton Grapple Hoist clears the Facility Cask, at which time the upper shield valve is closed. The 6.25 Ton Grapple Hoist and shield bell are then raised clear of the Facility Cask, and the telescoping port shield is retracted. The Facility Cask Rotating Device rotates the Facility Cask until it is in the horizontal position on the Facility Cask Transfer Car. The shield doors on the Facility Cask Loading Room are opened, and the facility Cask Transfer Car moves onto the waste shaft conveyance and is lowered to the waste Shaft Station underground. At the waste Shaft Station underground, the Facility Cask Transfer Car moves the Facility Cask from the waste shaft conveyance. A forklift is used to remove the Facility Cask from the Facility Cask Transfer Car and to transport the Facility Cask to the Underground HWDU.

Returning the Empty Cask

The empty RH-TRU 72-B cask or Shielded Insert is returned to the RH Bay by reversing the process. In the RH Bay, swipe samples are collected from inside the empty cask. If necessary, the inside of the cask is decontaminated. The RH-TRU 72-B cask lids are replaced, and the cask is replaced on the trailer using the RH Bay Bridge Crane. The impact limiters are replaced, and the trailer and the RH-TRU 72-B cask are then moved out of the RH Bay. The Shielded Insert is stored in the RH Bay until needed.

A1-1d(4) Handling Waste in Shielded Containers

Remote-Handled TRU mixed waste received at the WIPP facility in shielded containers will be managed, stored, and emplaced as CH TRU mixed waste using the CH TRU mixed waste handling equipment described in this Permit. Shielded containers with RH TRU mixed waste will arrive by tractor-trailer at the WIPP facility in sealed HalfPACTs, at which time they will undergo security and radiological checks and shipping documentation reviews. Consistent with

the handling of HalfPACT shipping packages in Section A1-1d(2), a forklift will remove the HalfPACT and transport it into the WHB and place the HalfPACT at either one of the two TRUDOCKs in the TRUDOCK Storage Area of the WHB Unit.

An external survey of the HalfPACT inner vessel will be performed as the outer containment vessel lid is removed. The inner vessel lid or closure lid will be lifted under the VHS, and the contents will be surveyed during and after this process is complete. A description of the VHS and criteria that are applied if radiological contamination is detected are discussed in Section A1-1d(2).

Shielded containers will be received as three-pack assemblies in HalfPACTs. An overhead bridge crane will be used to remove the contents of the shielded container assembly and place them on a facility pallet. The containers will be visually inspected for physical damage (severe rusting, apparent structural defects, signs of pressurization, etc.) and leakage to ensure they are in good condition prior to storage. Waste containers will also be checked for external surface contamination. If a primary waste container is not in good condition, the Permittees will overpack the container, repair/patch the container in accordance with 49 CFR §173 and §178 (e.g., 49 CFR §173.28), or return the container to the generator.

Once the shielded container assembly is on the facility pallet, the TRU mixed waste container identification numbers will be verified against the Uniform Hazardous Waste Manifest and the WWIS. Inconsistencies will be resolved as discussed in Section A1-1d(2). Up to two three-pack assemblies of shielded containers will be placed on a facility pallet. The use of facility pallets will elevate the waste at least 6 in. (15 cm) from the floor surface. Pallets of waste will then be relocated to the CH Bay Storage Area of the WHB Unit for normal storage or will be transported to the conveyance loading room as described in Section A1-1d(2).

A1-1e Inspections

Inspection of containers and container storage area are required by 20.4.1.500 NMAC (incorporating 40 CFR §264.174). These inspections are described in this section.

A1-1e(1) WHB Unit

The waste containers in storage will be inspected visually or by closed-circuit television camera prior to each movement and, at a minimum, weekly, to ensure that the waste containers are in good condition and that there are no signs that a release has occurred. Waste containers will be visually inspected for physical damage (severe rusting, apparent structural defects, signs of pressurization, etc.) and leakage. If a primary waste container is not in good condition, the Permittees will overpack the container, repair/patch the container in accordance with 49 CFR §173 and §178 (e.g., 49 CFR §173.28), or return the container to the generator. This visual inspection of CH TRU mixed waste containers shall not include the center drums of 7-packs and waste containers positioned such that visual observation is precluded due to the arrangement of waste assemblies on the facility pallets. If waste handling operations should stop for any reason with containers located at the TRUDOCK while still in the Contact-Handled Package, primary waste container inspections will not be accomplished until the containers of waste are removed from the Contact-Handled Package. If the lid to the Contact-Handled Package inner container vessel is removed, radiological checks (swipes of Contact-Handled Package inner surfaces) will be used to determine if there is contamination within the Contact-Handled Package. Such contamination could indicate a waste container leak or spill. Using radiological surveys, a

detected spill or leak of a radioactive contamination from a waste container will also be assumed to be a hazardous waste spill or release.

Waste containers residing within a Contact-Handled Package are not inspected, as described in the first bullet in Section A1-1e(2).

Waste containers will be inspected prior to reentering the waste management process line for downloading to the underground. Waste containers stored in this area will be inspected at least once weekly.

Loaded RH-TRU 72-B and CNS 10-160B casks will be inspected when present in the RH Bay. Physical or closed-circuit television camera inspections of the RH Complex are conducted as described in Table D-1a. Canisters loaded in an RH-TRU 72-B cask are inspected in the Transfer Cell during transfer from the cask to the Facility Cask. Waste containers received in CNS 10-160B casks are inspected in the Hot Cell during transfer from the cask to the Facility Canister by camera and/or visual inspection (through shield windows).

A1-1e(2) Parking Area Unit

Inspections will be conducted in the Parking Area Unit at a frequency not less than once weekly when waste is present. These inspections are applicable to loaded, stored Contact-Handled and Remote-Handled Packages. The perimeter fence located at the lateral limit of the Parking Area Unit, coupled with personnel access restrictions into the WHB, will provide the needed security. The perimeter fence and the southern border of the WHB shall mark the lateral limit of the Parking Area Unit (Figure A1-2). Inspections of the Contact-Handled or Remote-Handled Packages stored in the Parking Area Unit will focus on the inventory and integrity of the shipping containers and the spacing between Contact-Handled and Remote-Handled Packages. This spacing will be maintained at a minimum of four feet.

Contact-Handled and Remote-Handled Packages located in the Parking Area Unit will be inspected weekly during use and prior to each reuse.

Inspection of waste containers is not possible when the containers are in their shipping container (e.g., casks, TRUPACT-II or HalfPACTs). Inspections can be accomplished by bringing the shipping containers into the WHB Unit and opening them and lifting the waste containers out for inspection. The DOE, however, believes that removing containers strictly for the purposes of inspection results in unnecessary worker exposures and subjects the waste to additional handling. The DOE has proposed that waste containers need not be inspected at all until they are ready to be removed from the shipping container for emplacement underground. Because shipping containers are sealed and are of robust design, no harm can come to the waste while in the shipping containers and the waste cannot leak or otherwise be released to the environment. Contact-Handled or Remote-Handled Packages shall be opened every 60 days for the purposes of venting, so that the longest waste would be uninspected would be for 60 days from the date that the inner containment vessel of the Contact-Handled or Remote-Handled Package was closed at the generator site. Venting the Contact-Handled or Remote-Handled Packages involves removing the outer lid and installing a tool in the port of the inner lid.

The following strategy will be used for inspecting waste containers that will be retained within their shipping containers for an extended period of time:

- If the reason for retaining the TRU mixed waste containers in the shipping container is due to an unresolved manifest discrepancy, the DOE will return the shipment to the generator prior to the expiration of the 60 day NRC venting period or within 30 days after receipt at the WIPP, whichever comes sooner. In this case, no inspections of the internal containers will be performed. The stored Contact-Handled or Remote-Handled Package will be inspected weekly as described above.

- If the reason for retaining the TRU mixed waste containers in the Contact-Handled or Remote-Handled Package is due to an equipment malfunction that prevents unloading the waste in the WHB Unit, the DOE will return the shipment to the generator prior to the expiration of the 60 day NRC venting period. In this case, the DOE would have to ship the TRU mixed waste containers back with sufficient time for the generator to vent the shipment within the 60 day limit. In this case, no inspections of the internal containers will be performed. The stored Contact-Handled or Remote-Handled Package will be inspected weekly as described above.

- If the reason for retaining the TRU mixed waste containers is due to an equipment malfunction that prevents the timely movement of the waste containers into the underground, the waste containers will be kept in the Contact-Handled or Remote-Handled Package until day 30 (after receipt at the WIPP) or the expiration of the 60 day limit, whichever comes sooner. At that time the Contact-Handled or Remote-Handled Package will be moved into the WHB. Contact-Handled TRU mixed waste containers will be removed and placed in one of the permitted storage areas in the WHB Unit. The Remote-Handled Package will be vented, however, the containers will not be removed from the shipping package. If there is no additional space within the permitted storage areas of the WHB Unit, the DOE will discuss an emergency permit with the NMED for the purposes of storing the waste elsewhere in the WHB Unit. Waste containers will be inspected when removed from the Contact-Handled Packaging and weekly while in storage in the WHB Unit. Contact-Handled or Remote-Handled Packages will be inspected weekly while they contain TRU mixed waste containers as discussed above.

The DOE believes that this strategy minimizes both the amount of shipping that is necessary and the amount of waste handling, while maintaining a reasonable inspection schedule. The DOE will stop shipments of waste for any equipment outage that will extend beyond three days.

A1-1f Containment

The WHB Unit has concrete floors, which are sealed with a coating that is designed to resist all but the strongest oxidizing agents. Such oxidizing agents do not meet the TSDF-WAC and will not be accepted in TRU mixed waste at the WIPP facility. Therefore, TRU mixed wastes pose no compatibility problems with respect to the WHB Unit floor. The floor coating consists of Carboline® 1340 clear primer-sealer on top of prepared concrete, Carboline® 191 primer epoxy, and Carboline® 195 surface epoxy. The manufacturer's chemical resistance guide shows "Very Good" for acids and "Excellent" for alkalies, solvents, salt, and water. Uses are indicated for nuclear power plants, industrial equipment and components, chemical processing plants, and pulp and paper mills for protection of structural steel and concrete. During the Disposal Phase, should the floors need to be re-coated, any floor coating used in the WHB Unit TRU mixed waste handling areas will be compatible with the TRU mixed waste constituents and will have

chemical resistance at least equivalent to the Carboline® products. Figure A1-1 shows where TRU mixed waste handling activities discussed in this section occur.

During normal operations, the floor of the storage areas within the WHB Unit shall be visually inspected on a weekly basis to verify that it is in good condition and free of obvious cracks and gaps. Floor areas of the WHB Unit in use during off-normal events will be inspected prior to use and weekly thereafter. All TRU mixed waste containers located in the permitted storage areas shall be elevated at least 6 in. (15 cm) from the surface of the floor. TRU mixed waste containers that have been removed from Contact-Handled or Remote-Handled Packaging shall be stored at a designated storage area inside the WHB Unit so as to preclude exposure to the elements.

Secondary containment at the CH Bay Storage Area inside the WHB Unit shall be provided by the WHB Unit floor (See Figure A1-1). The WHB Unit is engineered such that during normal operations, the floor capacity is sufficient to contain liquids upon release. Secondary Containment at the Derived Waste Storage Area of the WHB Unit will be provided by a polyethylene standard drum pallet. The Parking Area Unit and TRUDOCK Storage Area of the WHB Unit require no engineered secondary containment since no waste is to be stored there unless it is protected by the Contact-Handled or Remote-Handled Packaging.

Calculations to determine the floor surface area required to provide secondary containment in the event of a release are based on the maximum quantity of liquid which could be present within ten percent of one percent of the volume of all the containers or one percent of the capacity of the largest single container, whichever is greater.

Secondary containment at storage locations inside the RH Bay and Cask Unloading Room is provided by the cask. Secondary containment at storage locations inside the Transfer Cell is provided by the RH-TRU 72-B cask or Shielded Insert. Secondary containment at storage locations in the Facility Cask Loading Room is provided by the Facility Cask. In the Hot Cell, waste containers are stored in either the drum carriage unit or in canister sleeves. The Lower Hot Cell provides secondary containment as described in section A1-f(2). In addition, the RH Bay, Hot Cell, and Transfer Cell contain 220-gallon (833-L) (Hot Cell), 11,400-gallon (43,152-L) (RH Bay), and 220-gallon (833-L) (Transfer Cell) sumps, respectively, to collect any liquids.

A1-1f(1) Secondary Containment Requirements for the WHB Unit

The maximum volume of TRU mixed waste on facility pallets that will be stored in the CH Bay Storage and Surge Storage Areas of the WHB is 18 facility pallets @ 2 TDOPs per pallet = 36 TDOPs of waste. 36 TDOPs @ 1,200 gal (4,540 L) per TDOP = 43,200 gal (163,440L) waste container capacity. 43,200 gal (163,440 L) x ten percent of the total volume = 4,320 gal (16,344 L) of waste. Since 4,320 gal (16,344 L) is greater than 1,200 gal (4,540 L), the configuration of possible TDOPs in the storage area is used for the calculation of secondary containment requirements. 4,320 gal (16,344 L) of liquid x one percent liquids = 43.2 gal (163.4 L) of liquid for which secondary containment is needed.

The maximum volume of TRU mixed waste that will be stored in the Derived Waste Storage Area of the WHB Unit is one SWB. 1 SWBs @ 496 gal (1,878 L) per SWB = 496 gal (1,878 L) waste container capacity. Since the maximum storage volume of 496 gal (1,878 L) is equal to the volume of the largest single container, the volume of the a single SWB is used for the

calculation of secondary containment requirements. 496 gal (1,878 L) of liquid x one percent liquids = 4.96 gal (18.8 L) of liquid for which secondary containment is needed.

The maximum volume of TRU mixed waste that will be stored in the Hot Cell is 13 RH TRU drums @ 55 gal (210 L) per drum = 715 (2,730 L) of waste in drums. 715 gal (2,730 L) of waste x ten percent of total volume = 71.5 gal (273 L) of waste. Secondary containment for liquids will need to have a capacity of 71.5 gal (273 L). Since 71.5 gal (273 L) is less than the volume of the single container of 235 gal (890 L) therefore, the larger volume is used for determining the secondary containment requirements. 235 gal (890 L) of waste x one percent liquids = 2.35 gal (8.9 L) of liquid needed for secondary containment.

The maximum volume of TRU mixed waste that will be stored in the Transfer Cell is one RH-TRU 72-B Canister or one Facility Canister @ 235 gal (890 L) per canister x ten percent of total volume = 23.5 gal (8.90 L) of waste. Since 23.5 gal (8.90 L) is less than the volume of the single container of 235 gal (890 L) therefore, the larger volume is used for determining the secondary containment requirements. 235 gal (890 L) of waste x one percent liquids = 2.35 gal (8.9 L) of liquid needed for secondary containment.

A1-1f(2) Secondary Containment Description

The following is a calculation of the surface area the quantities of liquid would cover. Using a conversion factor of 0.1337 ft^3/gal (0.001 m^3/L) and assuming the spill is 0.0033 ft (0.001 m) thick, the following calculation can be used:

gallons × cubic feet per gallon ÷ thickness in feet = area covered in square feet

CH Bay Storage Area

43.2 gal × 0.1337 ft^3/gal ÷ 0.0033 ft = 1,750 ft^2 (162.7 m^2)

Hot Cell

2.35 gal × 0.1337 ft^3/gal ÷ 0.0033 ft = 95 ft^2 (8.8 m^2)

Transfer Cell

2.35 gal × 0.1337 ft^3/gal ÷ 0.0033 ft = 95 ft^2 (8.8 m^2)

The WHB Unit has 33,175 ft^2 (3,082 m^2) of floor space, the CH Bay Storage Area has 26,151 ft^2 (2,430 m^2) of floor space. The CH Bay Storage Area requires 1,750 ft^2 (162.7 m^2) for containment, Thus, the floor area of the CH Bay Storage Area of the WHB Unit provide sufficient secondary containment to contain a release of ten percent of one percent of the volume of all of the containers, or one percent of the capacity of the largest container, whichever is greater.

The Hot Cell and Transfer Cell are the only portions of the RH Complex managing RH TRU mixed waste outside of casks or canisters. The Hot Cell has 1,841 ft^2 (171 m^2) of floor space and the Transfer Cell has 1,003 ft^2 (93 m^2) of floor space. The Hot Cell and Transfer Cell require only 95 ft^2 for containment, therefore there is sufficient floor space to contain a release of ten percent of one percent of containers in these storage areas.

In addition, both the Hot Cell and the Transfer Cell each contain a 220 gal (833 L) sump that will collect any liquids that spill from containers.

Derived Waste Storage Area

The derived waste containers in the Derived Waste Storage Area will be stored on standard drum pallets, which provides approximately 50 gal (190 L) of secondary containment capacity. Thus the secondary containment capacity of the standard drum pallet is sufficient to contain a release of ten percent of one percent of the largest container (4.96 gal or 18.8 L).

Parking Area Unit

Containers of TRU mixed waste to be stored in the Parking Area Unit will be in Contact-Handled or Remote-Handled Packages. There will be no additional requirements for engineered secondary containment systems.

A1-1g Special Requirements for Ignitable, Reactive, and Incompatible Waste

Special requirements for ignitable, reactive, and incompatible waste are addressed in 20.4.1.500 NMAC (incorporating 40 CFR §§264.176 and 264.177). Permit Part 2 precludes ignitable, reactive, or incompatible waste at the WIPP. No additional measures are required.

A1-1h Closure

Clean closure is planned in accordance with 20.4.1.500 NMAC (incorporating 40 CFR §264.178) for all permitted container storage areas. The applicable areas and the plans for clean closure are detailed in Permit Attachment G.

A1-1i Control of Run On

The WHB Unit is located indoors which prevents run-on from a precipitation event. In addition, the CH TRU containers are stored on facility pallets, containment pallets, or standard drum pallets, which elevate the CH TRU mixed waste containers at least 6 in. (15 cm) off the floor, or in Contact-Handled or Remote-Handled Packages, so that any firewater released in the building will not pool around containers. Within the RH Bay, Cask Unloading Room, Transfer Cell, and Facility Cask Loading Room, waste containers are stored in casks or Shielded Inserts and protected from any potential run on. Any firewater released in the building will not pool around the waste containers as they are stored in casks, or Shielded Inserts. Within the Hot Cell, there is no source of water during operations. However, control of run-on is provided by the Lower Hot Cell, which lies below a sloped floor surrounded by a grating and canister sleeves in the Hot Cell above.

In the Parking Area Unit, the containers of TRU mixed waste are always in Contact-Handled or Remote-Handled Packages which protect them from precipitation and run on. Therefore, the WIPP container storage units will comply with the requirements of 20.4.1.500 NMAC (incorporating 40 CFR §264.175(b)(4)).

References

DOE, 1997a. Resource Conservation and Recovery Act Part B Permit Application, Waste Isolation Pilot Plant (WIPP), Carlsbad, New Mexico, Rev. 6.5, 1997.

DOE, 1997b. Waste Isolation Pilot Plant Safety Analysis Report (DOE/WIPP-95-2065, Rev. 1), U.S. Department of Energy, Carlsbad Area Office, Carlsbad, NM, April 1997.

(This page intentionally blank)

TABLES

(This page intentionally blank)

Table A1-1
Basic Design Requirements, Principal Codes, and Standards

	Structure/Supports			Liquid and Process Air Handling Processing and storage equipment							Air Hdlg Ducting & Fans	HVAC filters		Mechanical Handling Equipment			Instrumentation and Electrical			Quality Assurance Program	
					Piping & Valves																
	DBE DBT ACI-318 AISC	ANSI A58.1	Site-specific Require-ments	Vessel ASME VIII NFPA[e]	ANSI BBB,1 NFPA[e]	UP	Pumps API-610 NFPA[e]	Storage Tanks API-650 or API-620	Heat Exchgrs ASME VIII TEMA	All Other Equip-ment Mfrs Std	ARI SMACNA AMCA	Pre-filters ASHRAE 52.68	HEPA Filters MIL F 51068C ANSI N 509 ANSI N 510	Crane and Related equipment CMAA	CMAA AISC AWS	All Other Equip-meant Mfrs STD	A-NE	ANSI Sods or Nat'l Elect-trial Code	IA/ Mfrs Std	ANSI/ASME NQA-1 and Supple-ments	Com. and Industry Practices
Design Class I	X		a	X f			X	X	X		X c	X c,d	X c	X	X		X	X		X	
Design Class Ii	a,b	X	a	X	X		X	X	X		X c	X c	X c	X	X			X	X	X	
Design Class Iiia	a	X	a	a	X		a			X	X c	X c	X c	a	a	X		X	X	X	
Design Class Iii		X	g		a	X				X	X	X	X			X		X	X		X

X = Minimum Requirements

[a] Requirements to be determined on a case-by-case basis.
[b] Required for structure and supports needed for confinement and control of radioactivity.
[c] Except structures and supports that are designed to withstand a design-basis earthquake (DBE)/design-basis tornado (DBT) when specified in column 1 of this table.
[d] Underwriter's Laboratory (UL) Class I Listed.
[e] For fire-protection systems.
[f] American Society for Mechanical Engineers (ASME) III for other Class I vessels.
[g] Design of underground structures, mining equipment, and facilities are basically governed by the MSHA and experience in local mines.

ACI = American Concrete Institute
AISC = American Institute of Steel Construction
AMCA = Air Moving and Conditioning Association
ANSI = American National Standards Institute
API = American Petroleum Institute
ARI = Air Conditioning and Refrigeration Institute
ASHRAE = American Society of Heating, Refrigeration, and Air Conditioning Engineers, Inc.
AWS = American Welding Society
CMAA = Crane Manufacturers Association
DBE = Design-basis earthquake
DBT = Design-basis tornado
HEPA = High-efficiency particulate air
HVAC = Heating, Ventilation, and Air-Conditioning
A = Institute of Electronics and Electronic Engineers
IA = Instrument Society of America
MFR = Manufacturer
MIL = Military (specification)
MSHA = Mine Safety and Health Administration
NFPA = National Fire Protection Association
NQA = Nuclear Quality Assurance (Standard)
SMACNA = Sheet Metal and Air Conditioning Contractors National Association, Inc.
STD = Standard
TEMA = Tubular Exchanger Manufacturers Association
UP = Uniform Plumbing Code

Table A1-2
Waste Handling Equipment Capacities

CAPACITIES FOR EQUIPMENT	
CH Bay overhead bridge crane	12,000 lbs.
Surface forklifts	26,000 lbs. (CH Bay forklift) 70,000 lbs. (TRUPACT-III Handler forklift)
Facility Pallet	25,000 lbs.
Adjustable center-of-gravity lift fixture	10,000 lbs.
Facility Transfer Vehicle	30,000 lbs.
Yard Transfer Vehicle	60,000 lbs.
MAXIMUM GROSS WEIGHTS OF CONTAINERS	
Seven-pack of 55-gallon drums	7,000 lbs.
Four-pack of 85-gallon drums	4,500 lbs.
Three-pack of 100-gallon drums	3,000 lbs.
Ten-drum overpack	6,700 lbs.
Standard waste box	4,000 lbs.
Standard large box 2	10,500 lbs.
Shielded container	2,260 lbs.
Three-pack of shielded containers	7,000 lbs.
MAXIMUM NET EMPTY WEIGHTS OF EQUIPMENT	
TRUPACT-II	13,140 lbs.
HalfPACT	10,500 lbs.
TRUPACT-III	43,600 lbs.
Adjustable center of gravity lift fixture	2,500 lbs.
Facility pallet	4,120 lbs.

Table A1-3
RH TRU Mixed Waste Handling Equipment Capacities

CAPACITIES FOR EQUIPMENT	
RH Bay Overhead Bridge Crane	140 tons main hoist 25 tons auxiliary hoist
RH-TRU 72-B Cask Transfer Car	20 tons
CNS 10-160B Cask Transfer Car	35 tons
Transfer Cell Shuttle Car	29 tons
Hot Cell Bridge Crane	15 tons
Overhead Powered Manipulator	2.5 tons
Facility Cask Rotating Device	No specific load rating
Cask Unloading Room Crane	25 tons
6.25 Ton Grapple Hoist	6.25 tons
Facility Cask Transfer Car	40 tons
MAXIMUM GROSS WEIGHTS OF RH TRU CONTAINERS	
RH TRU Canister	8,000 lbs
55-Gallon Drum	1,000 lbs
Facility Canister	10,000 lbs
MAXIMUM NET EMPTY WEIGHTS OF EQUIPMENT	
RH-TRU 72-B Cask	37,000 lbs
CNS 10-160B Cask	57,500 lbs
Facility Cask	67,700 lbs
Shielded Insert	26,300 lbs

(This page intentionally blank)

FIGURES

(This page intentionally blank)

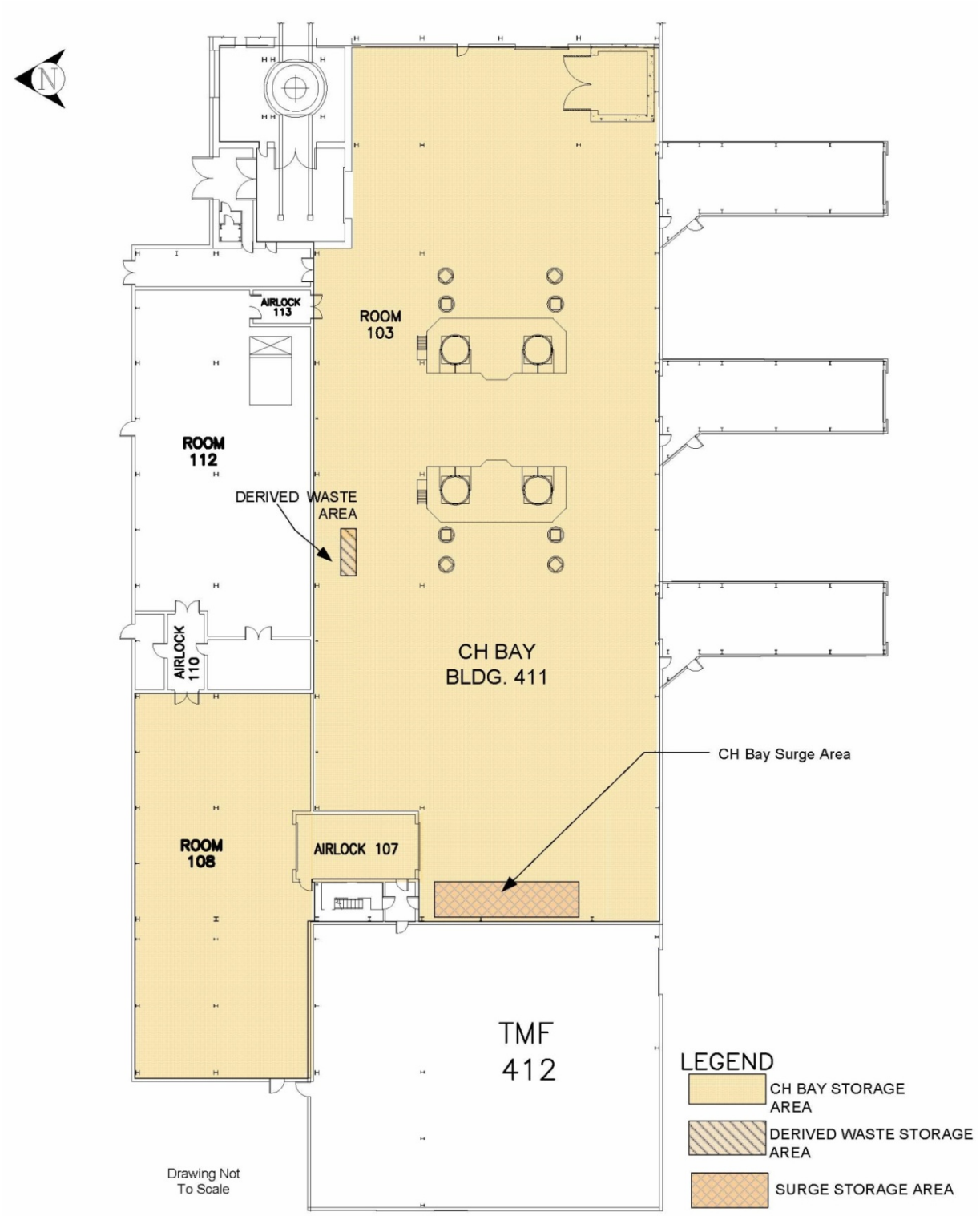

Figure A1-1
Waste Handling Building - CH TRU Mixed Waste Container Storage and Surge Areas

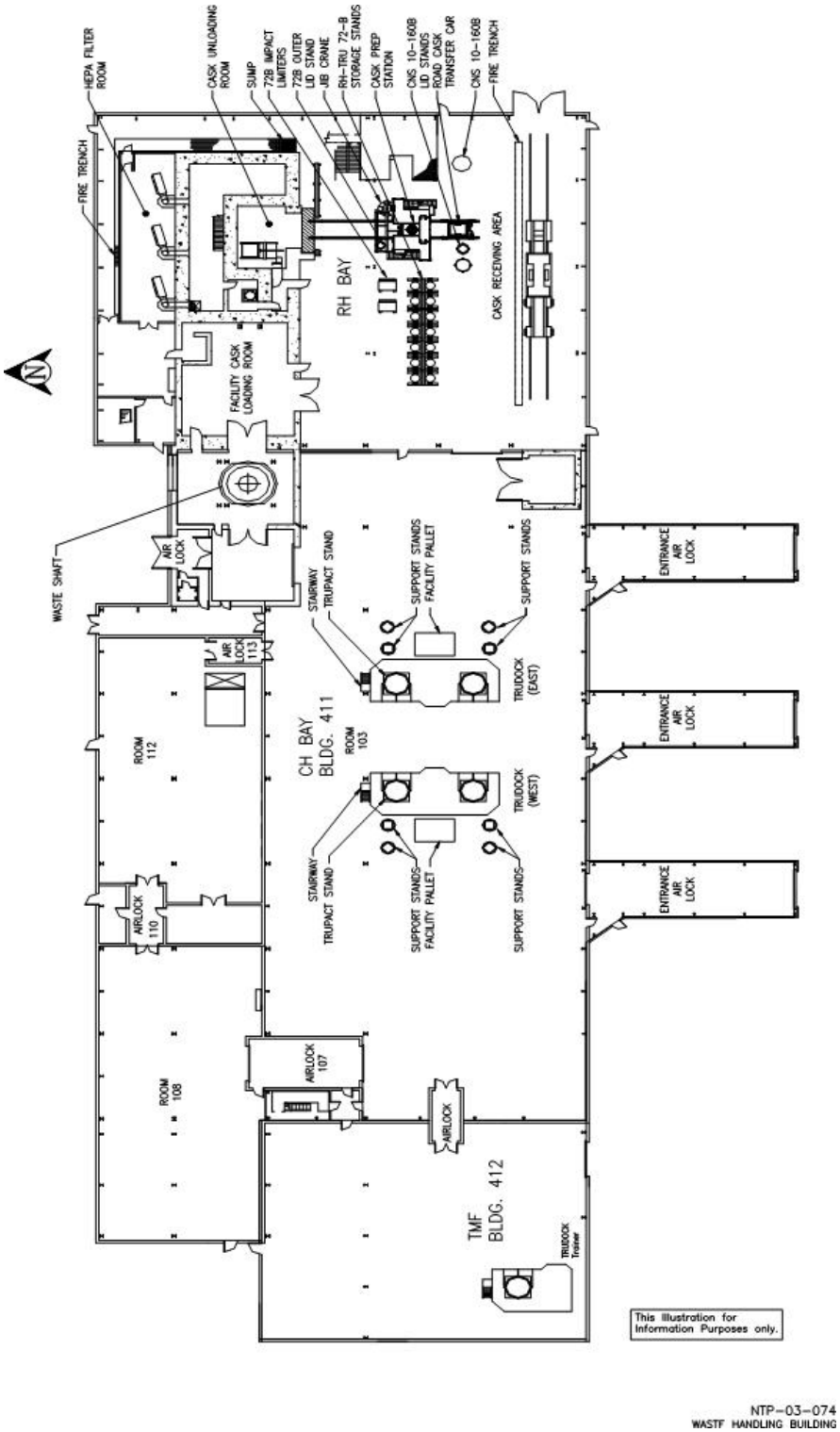

Figure A1-1a
Waste Handling Building Plan (Ground Floor)

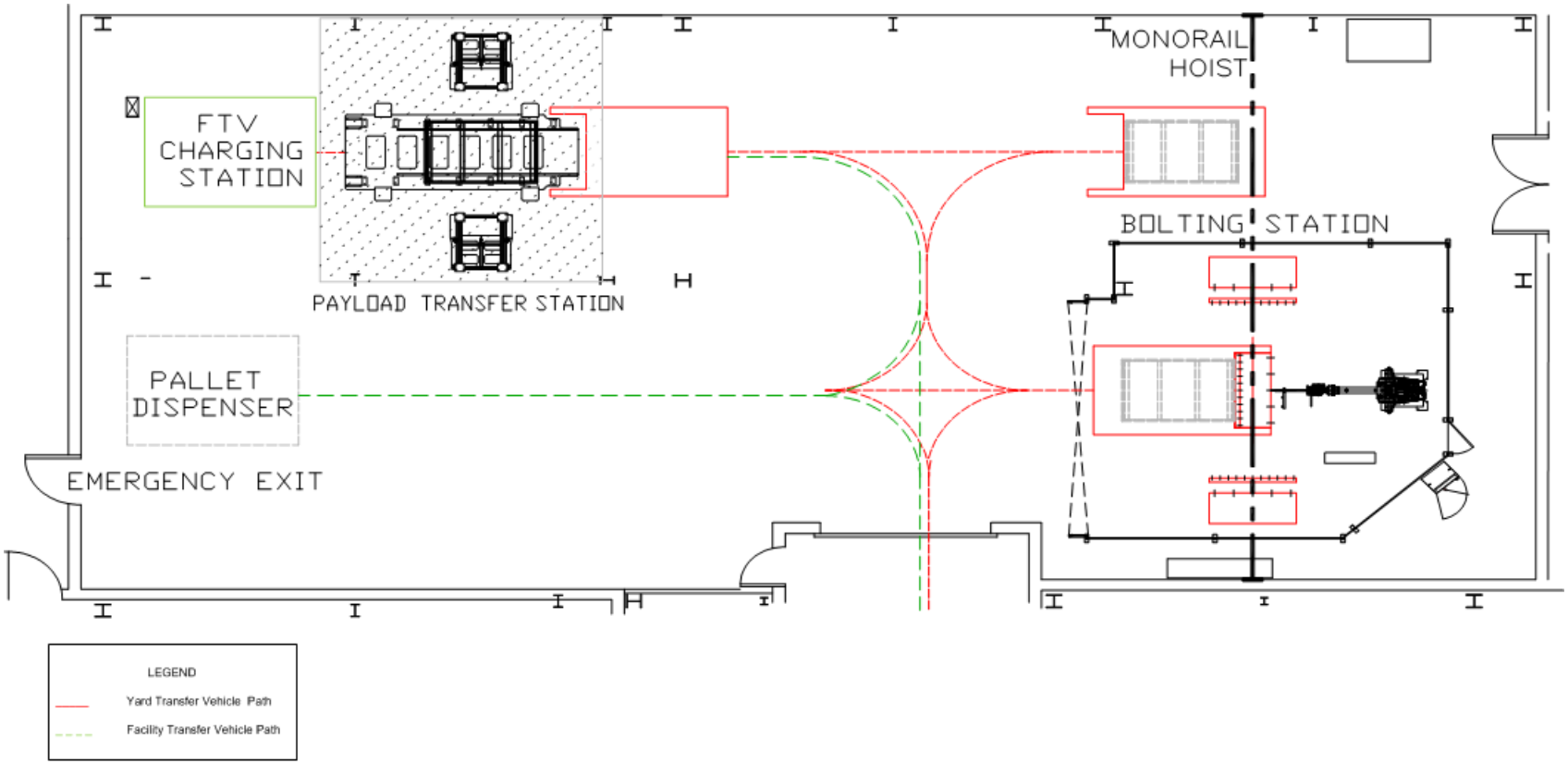

Figure A1-1b
Waste Handling Building Plan (Room 108 Detail)

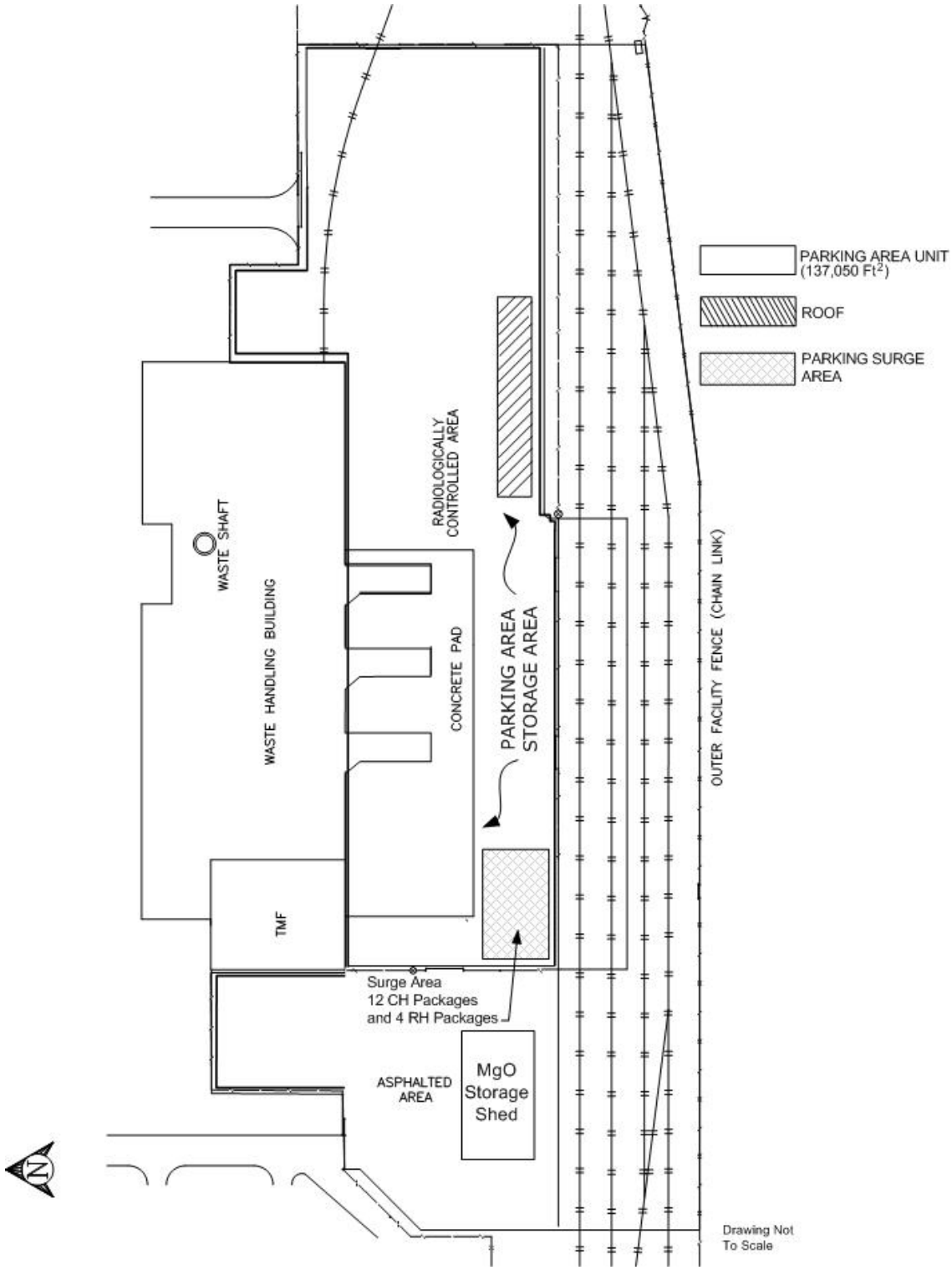

Figure A1-2
Parking Area - Container Storage and Surge Areas

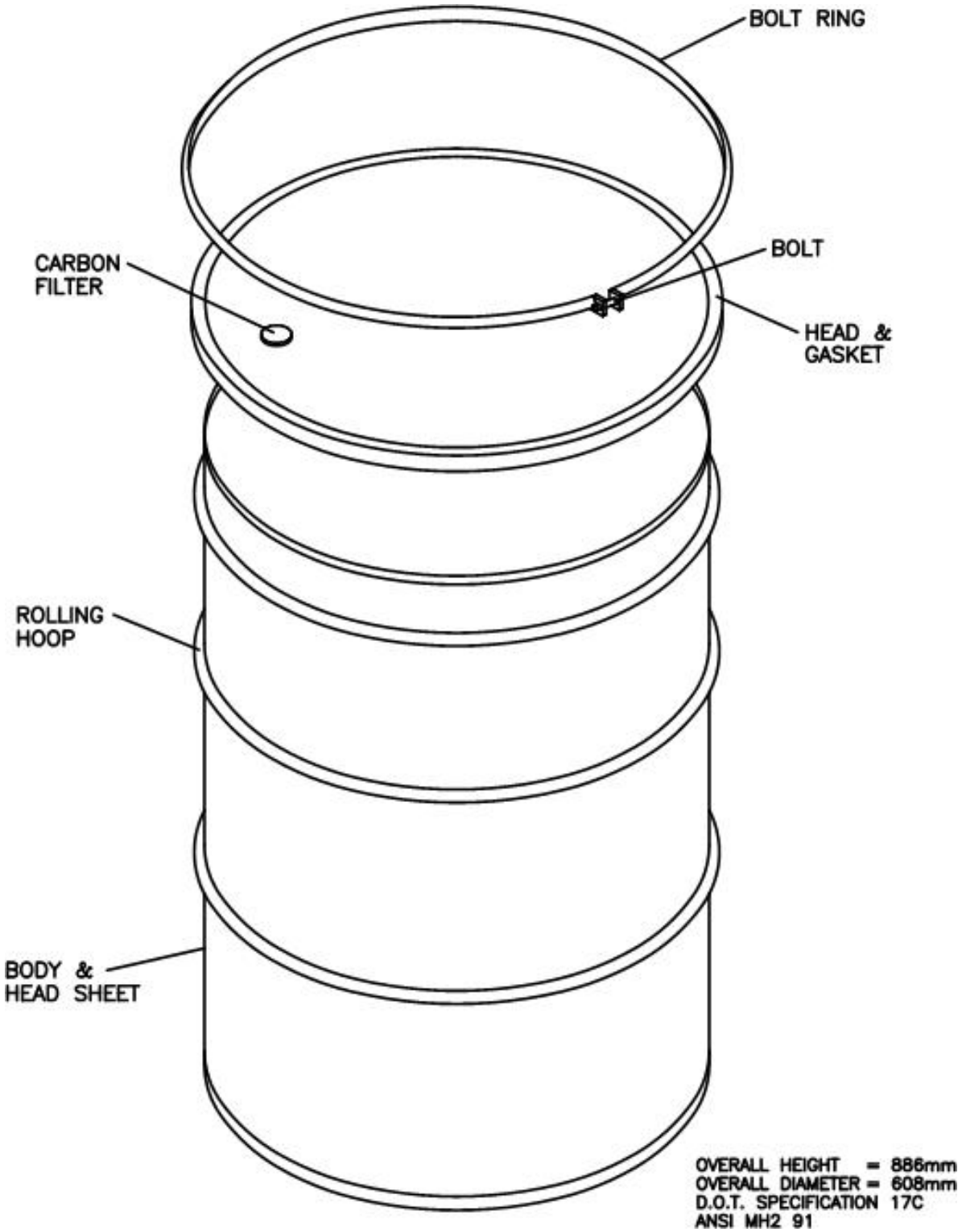

Figure A1-3
Standard 55-Gallon Drum (Typical)

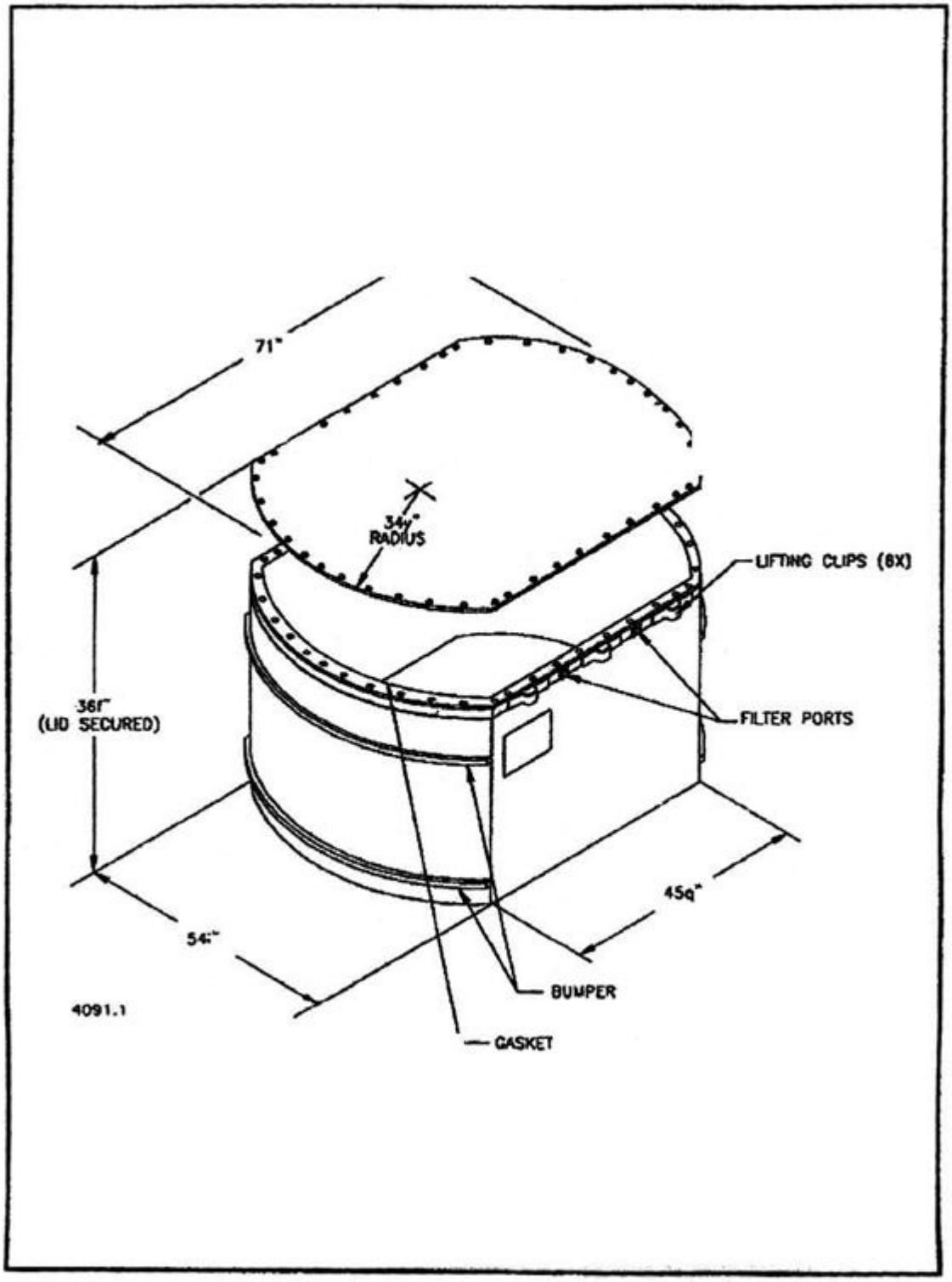

Figure A1-4
Standard Waste Box

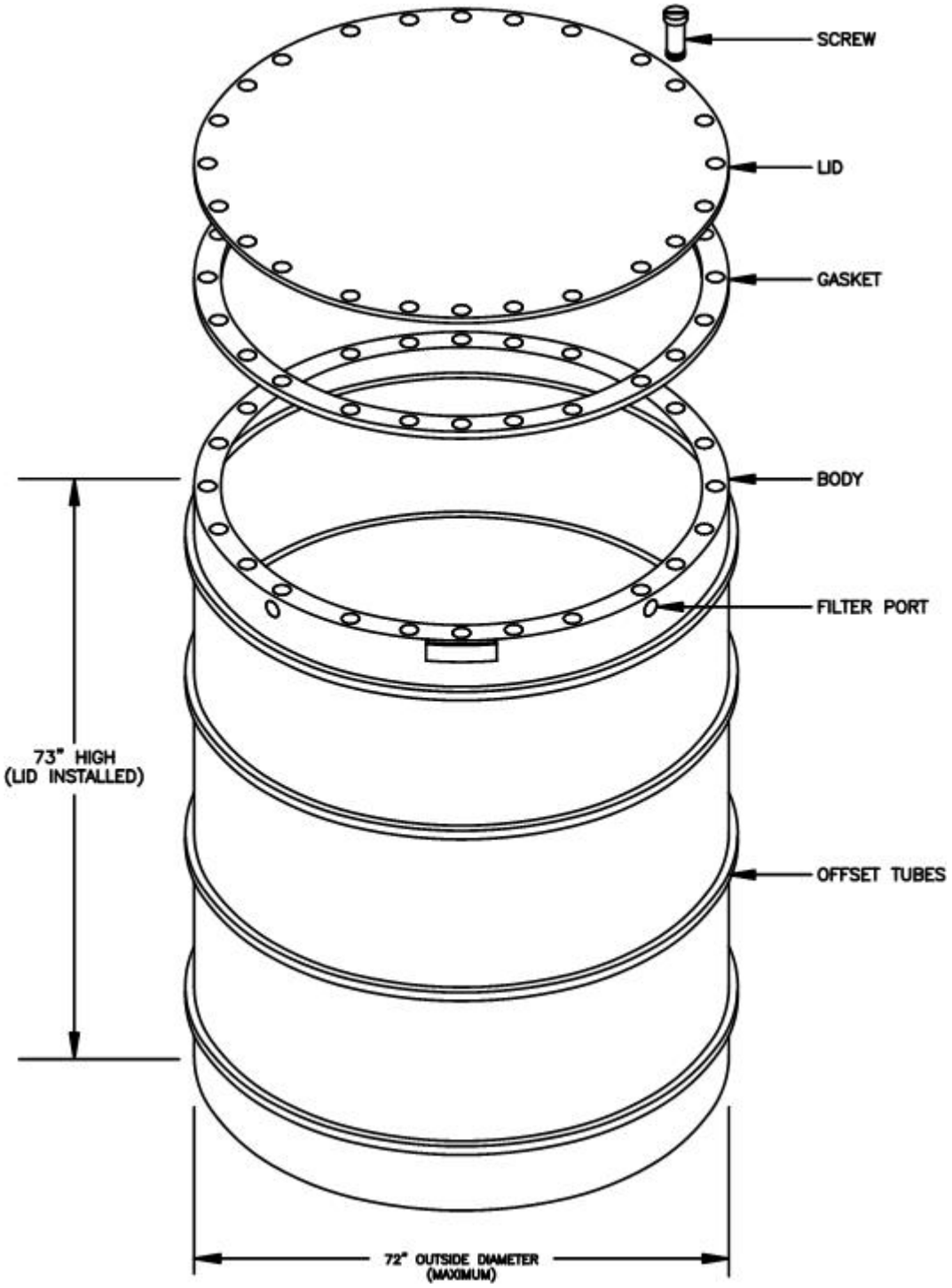

Figure A1-5
Ten-Drum Overpack

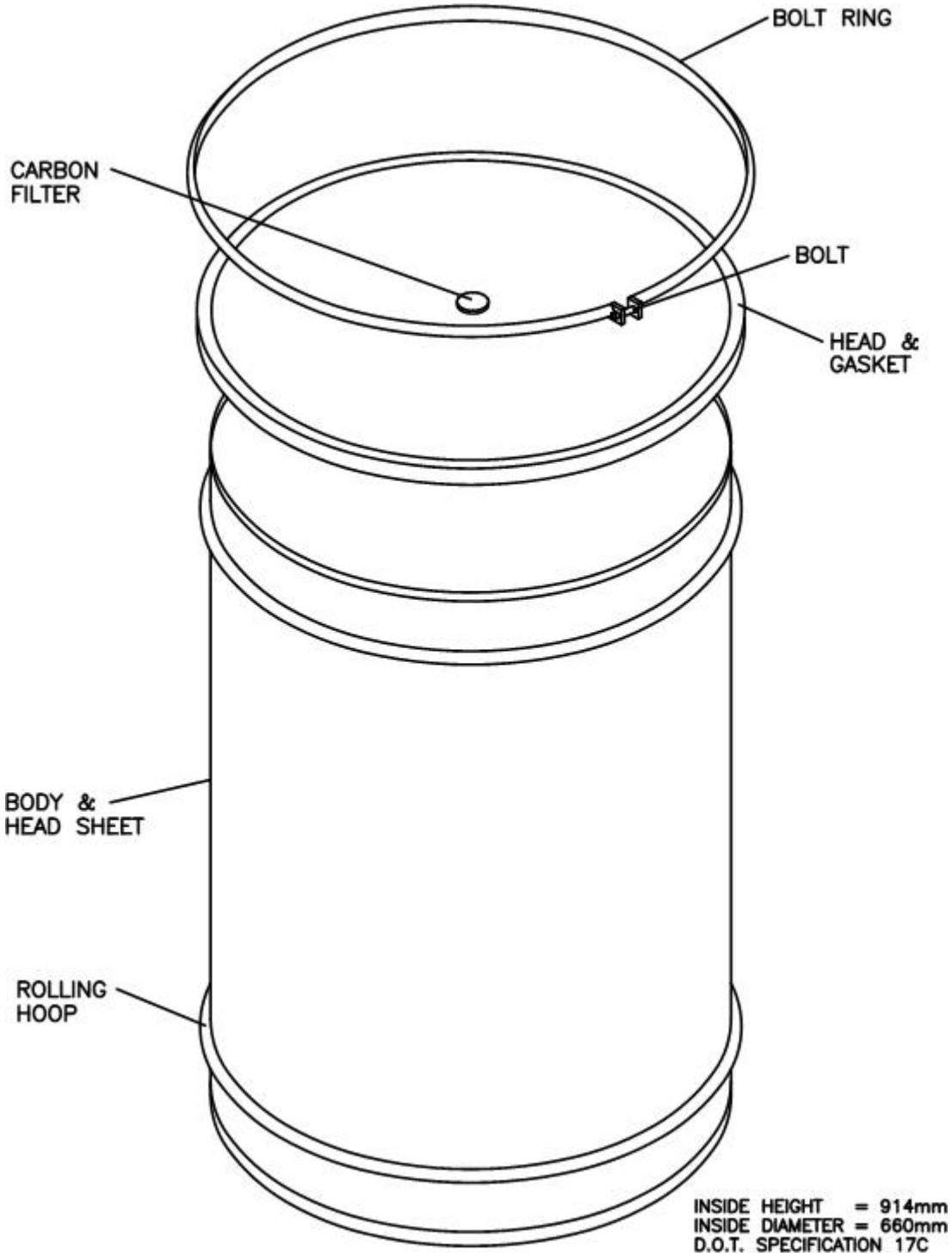

Figure A1-6
85-Gallon Drum

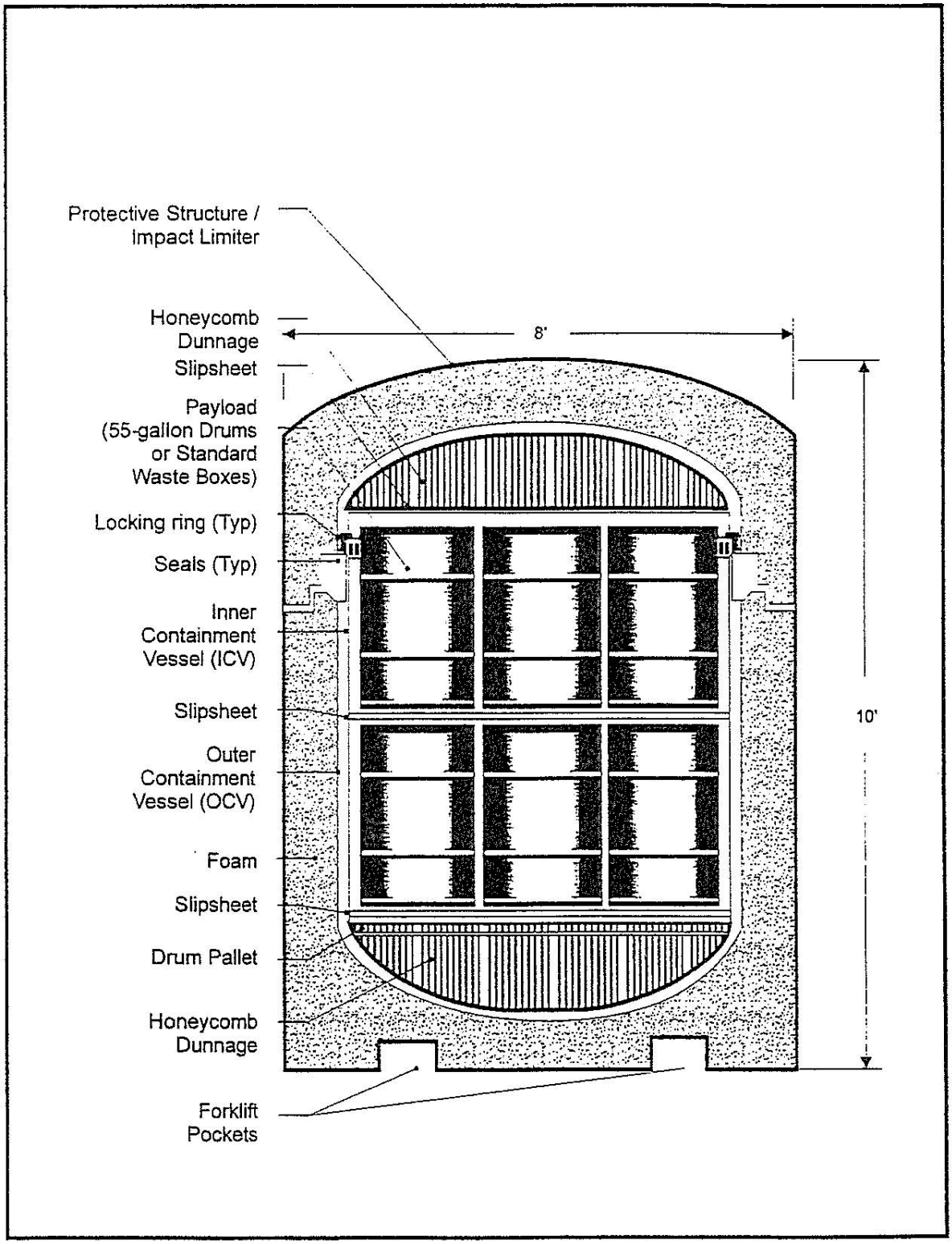

Figure A1-8a
TRUPACT-II Shipping Container for CH Transuranic Mixed Waste (Schematic)

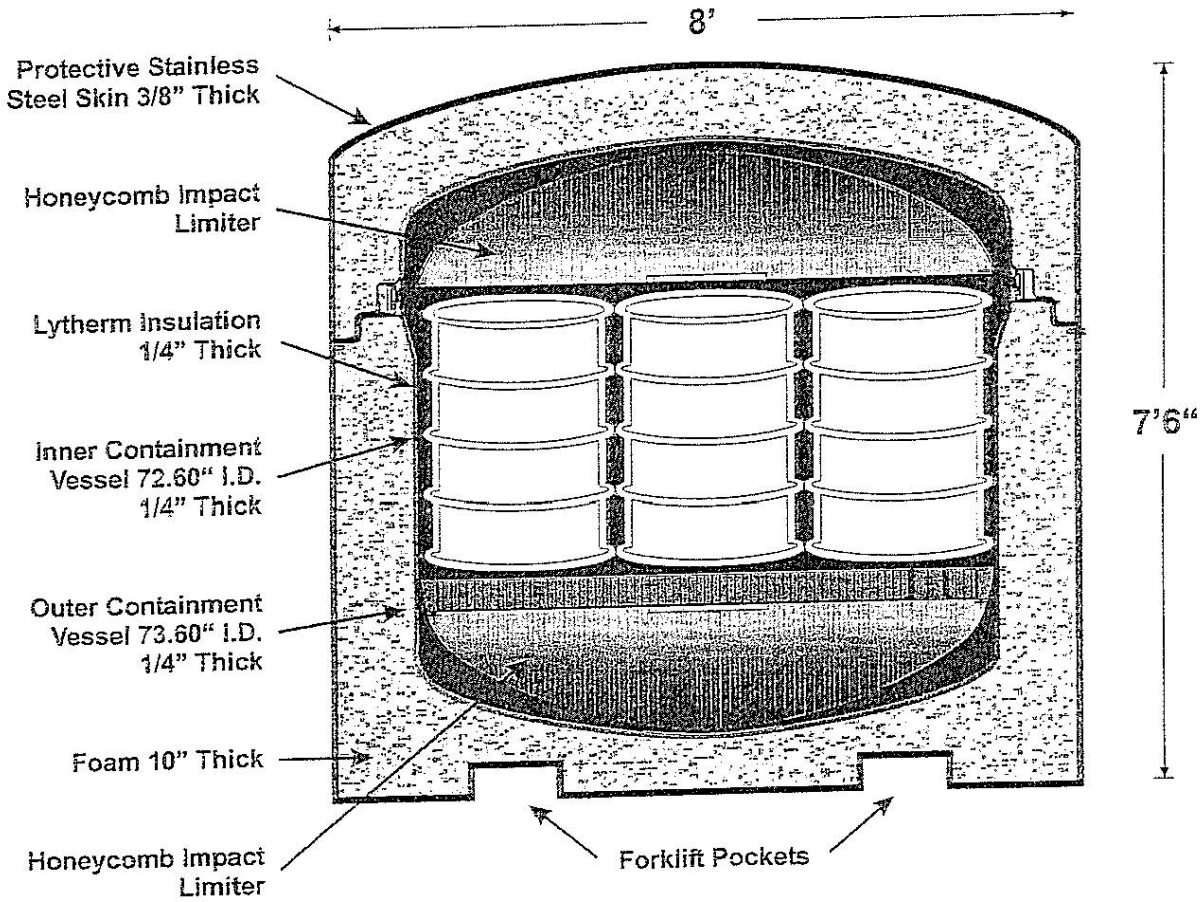

Figure A1-8b
Typical HalfPACT Shipping Container for CH Transuranic Mixed Waste (Schematic)

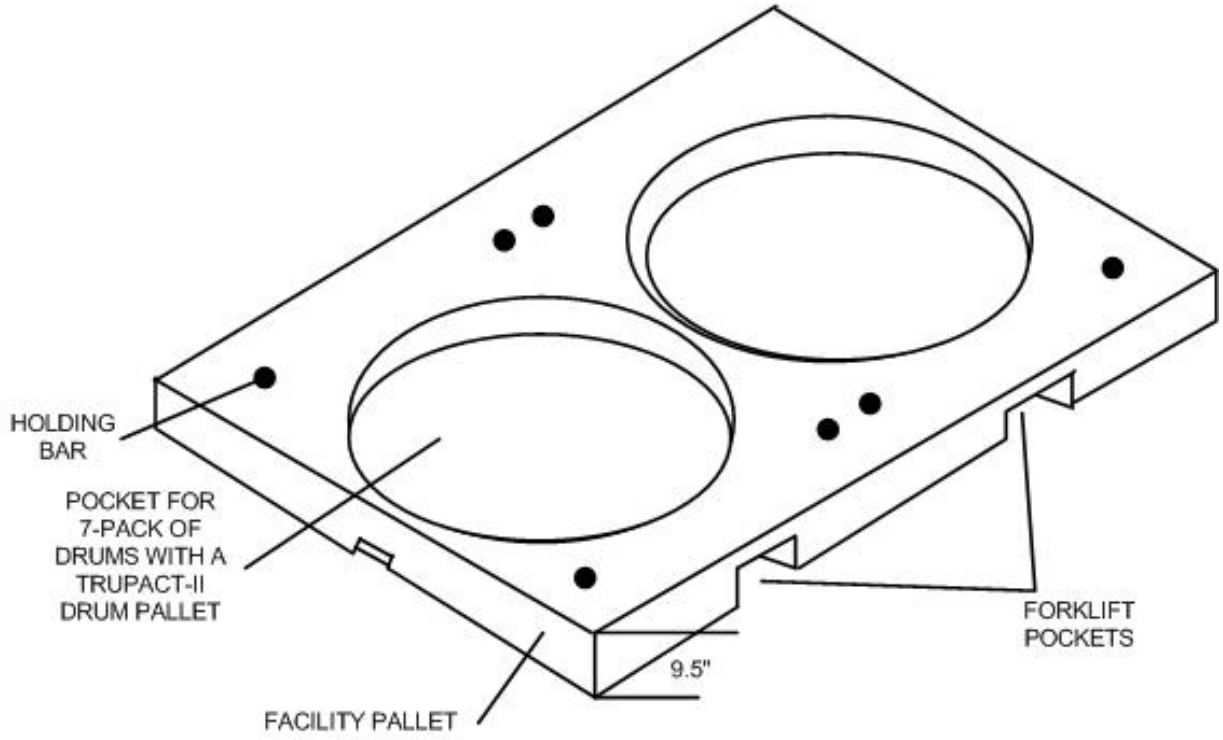

Figure A1-10
Facility Pallet for Seven-Pack of Drums

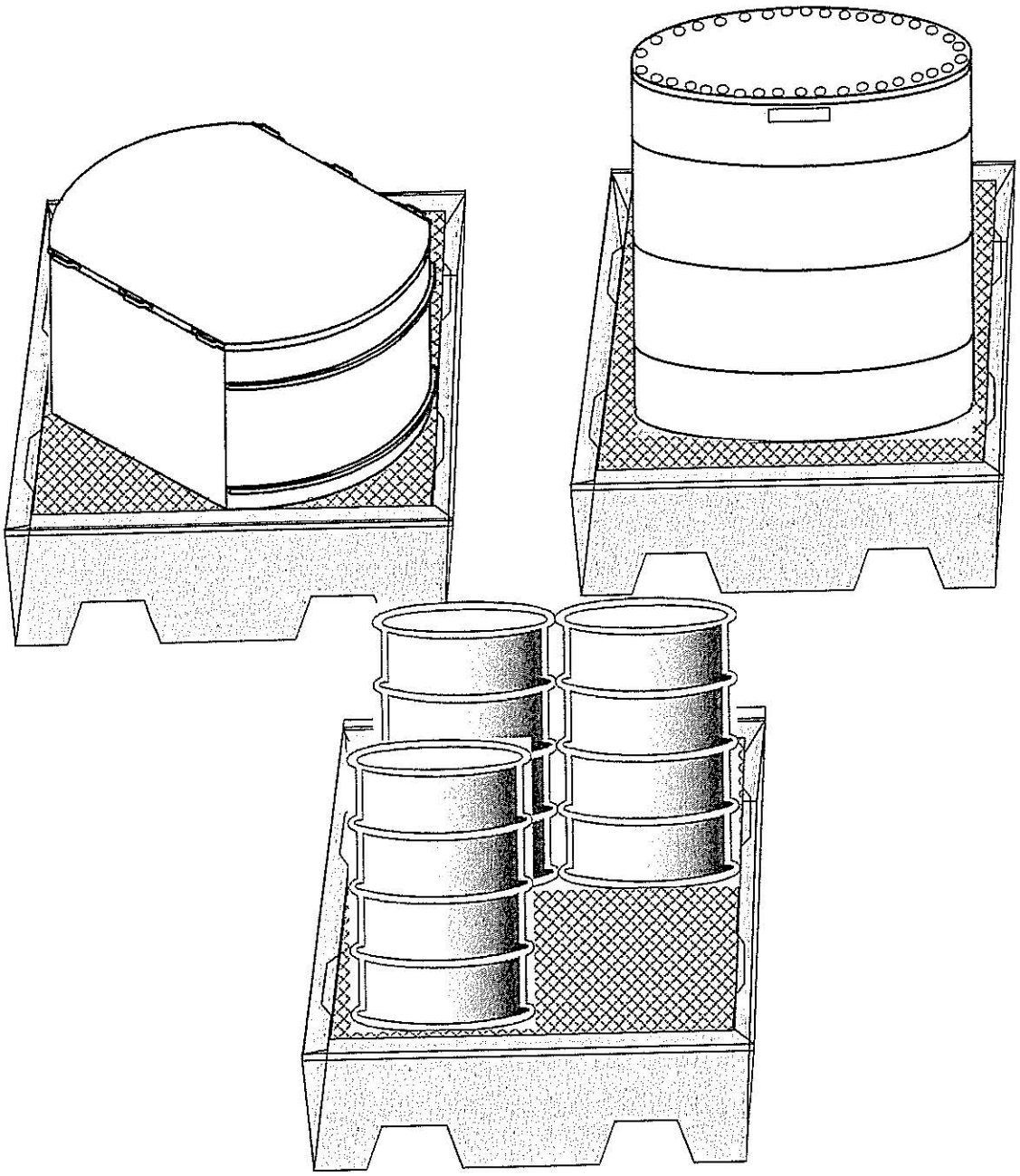

Figure A1-10a
Typical Containment Pallet

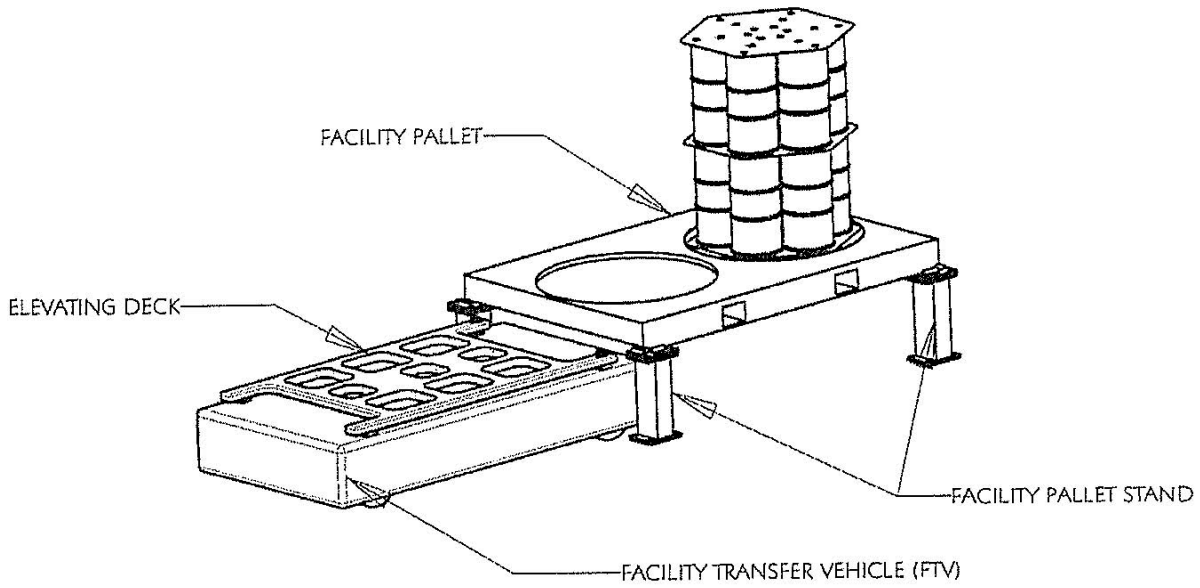

Figure A1-11
Facility Transfer Vehicle, Facility Pallet, and Typical Pallet Stand

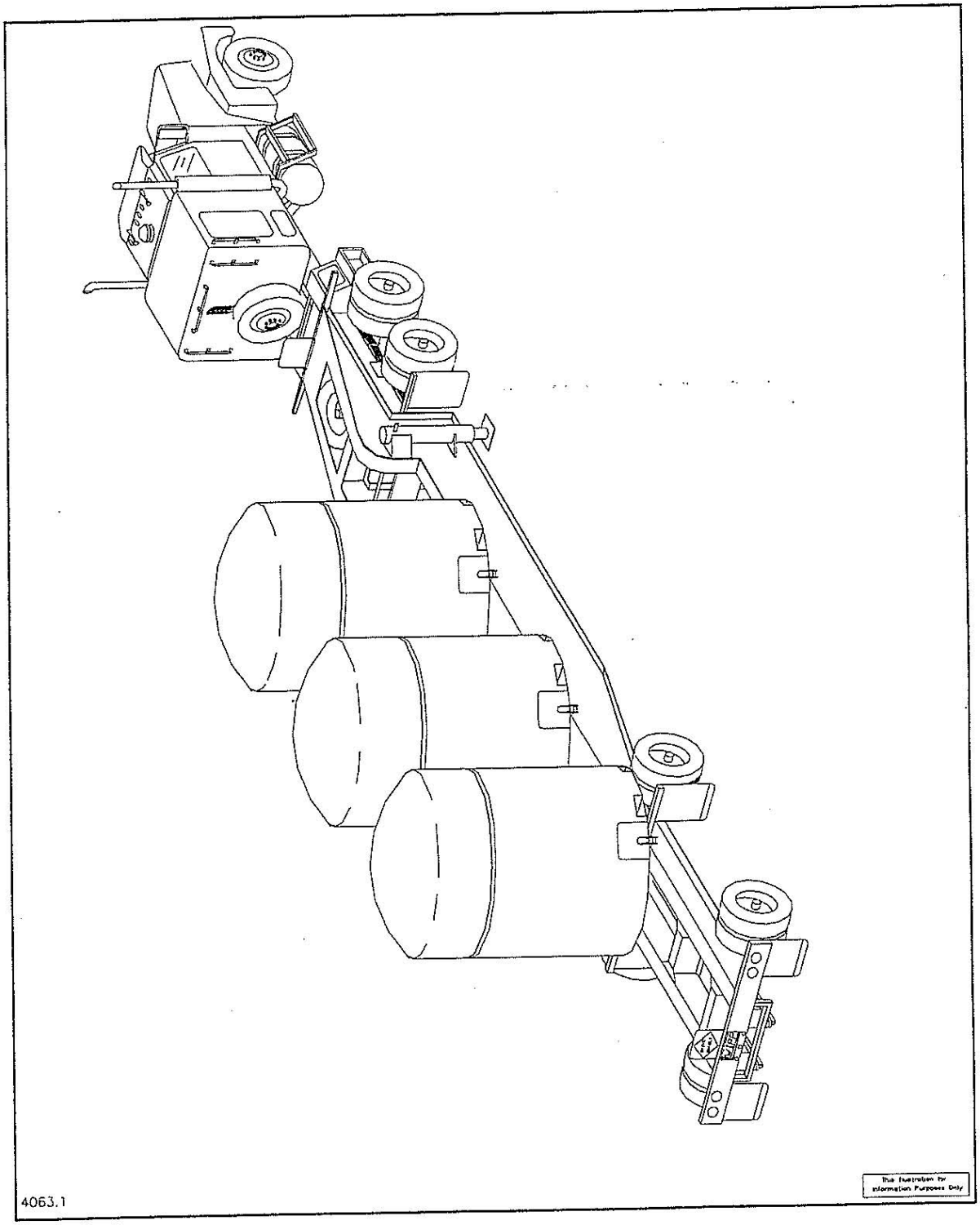

Figure A1-12
TRUPACT-II Containers on Trailer

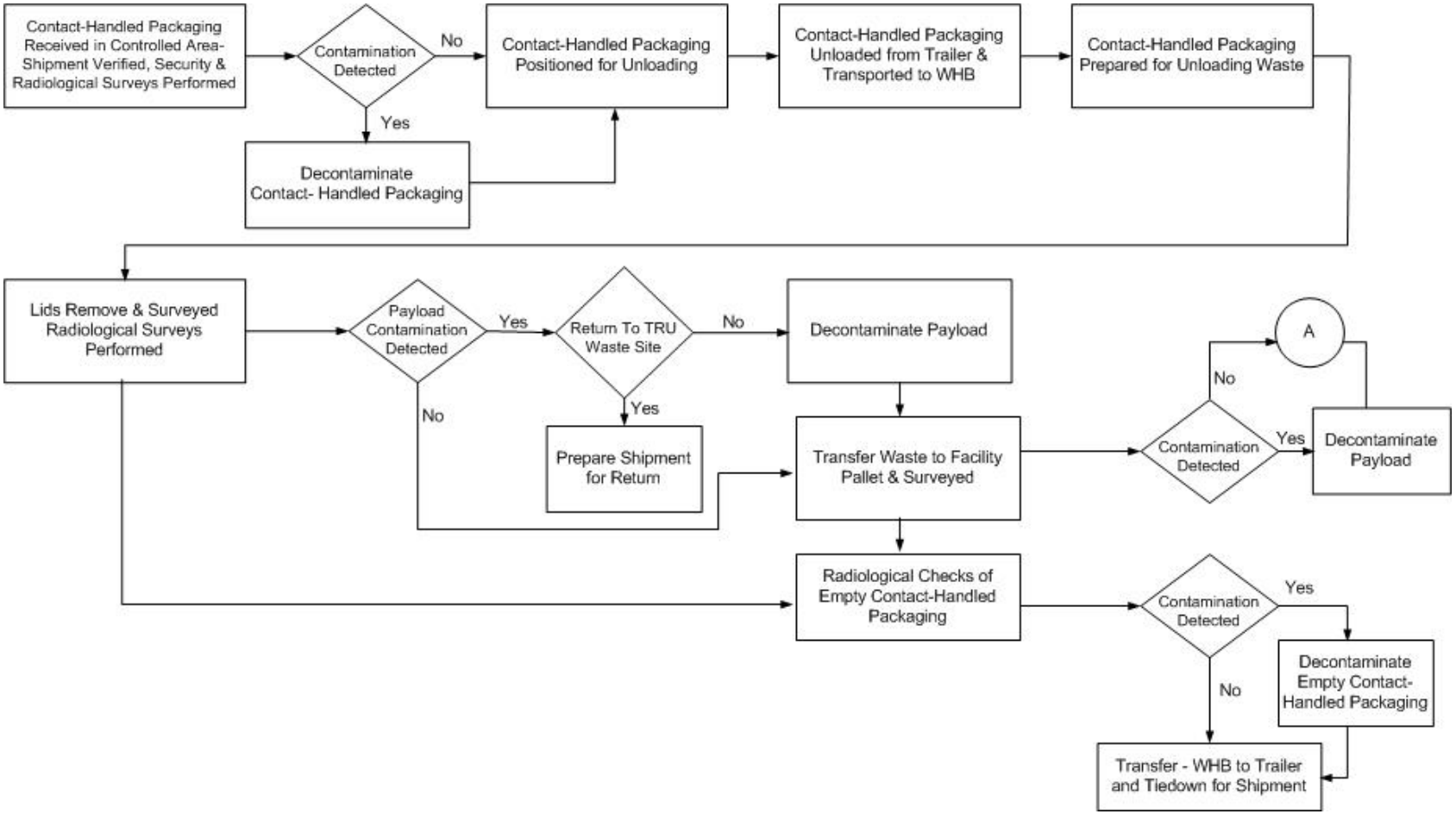

Figure A1-13
WIPP Facility Surface and Underground CH Transuranic Mixed Waste Process Flow Diagram

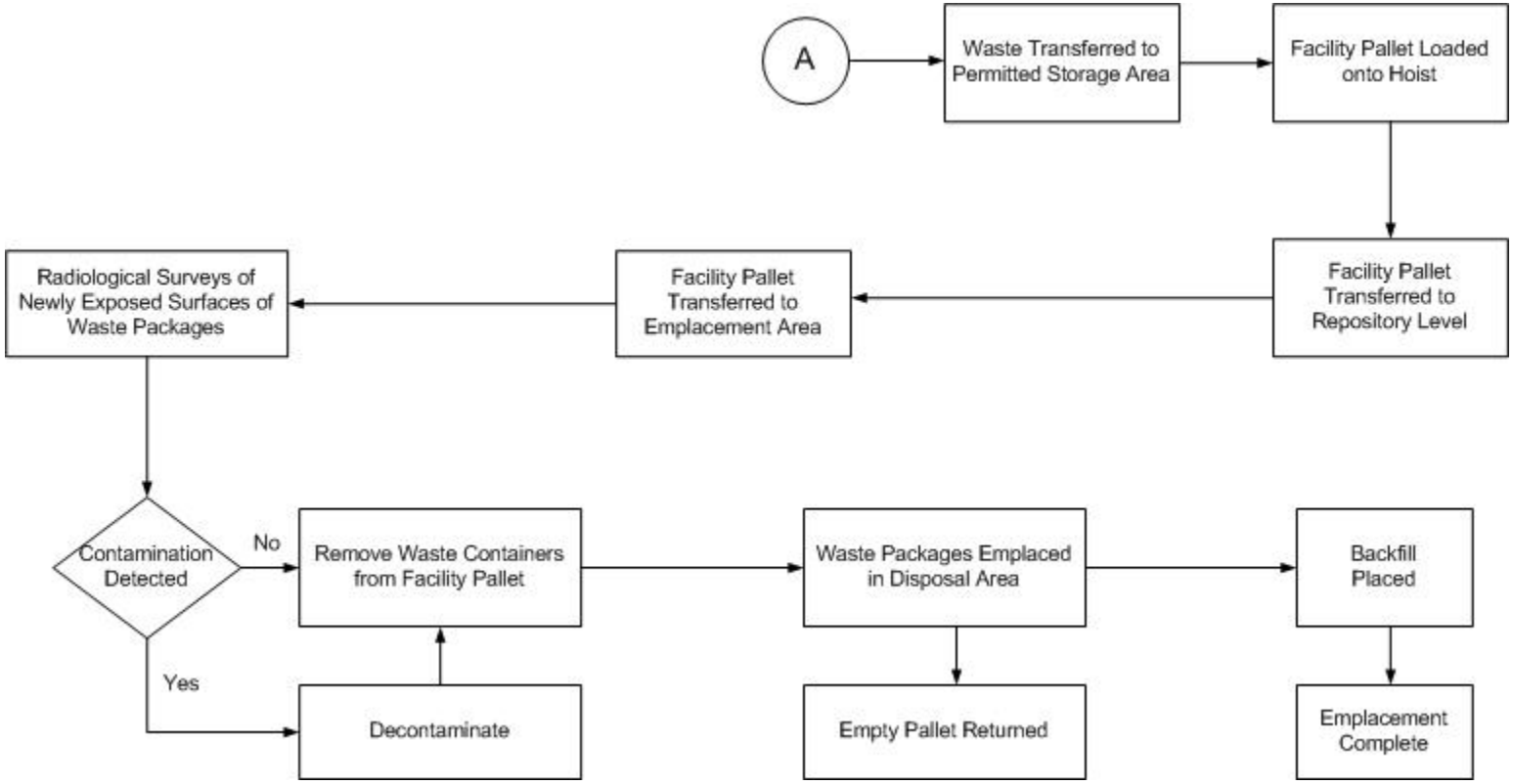

Figure A1-13
WIPP Facility Surface and Underground CH Transuranic Mixed Waste Process Flow Diagram (Continued)

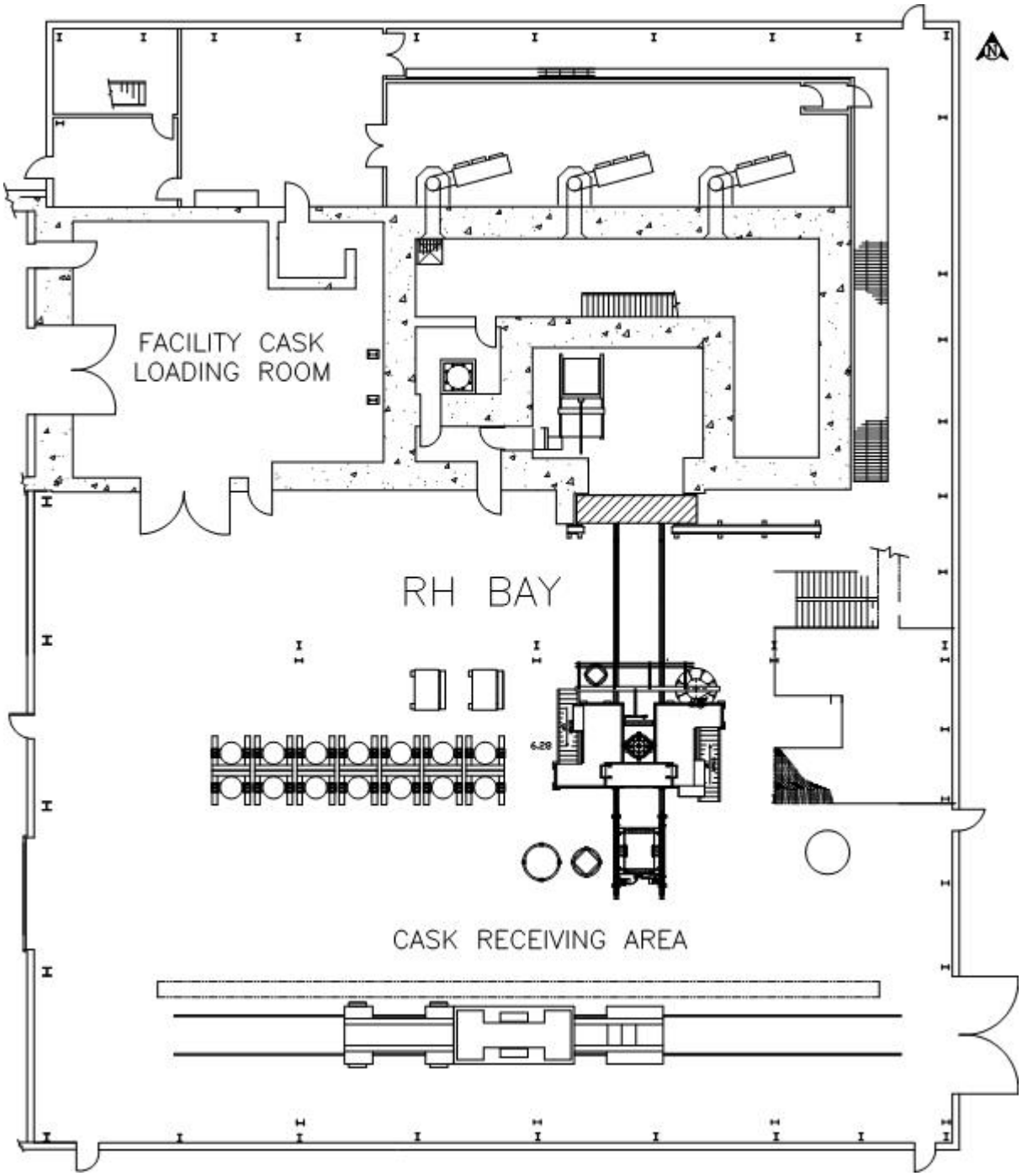

Figure A1-14a
RH Bay Ground Floor

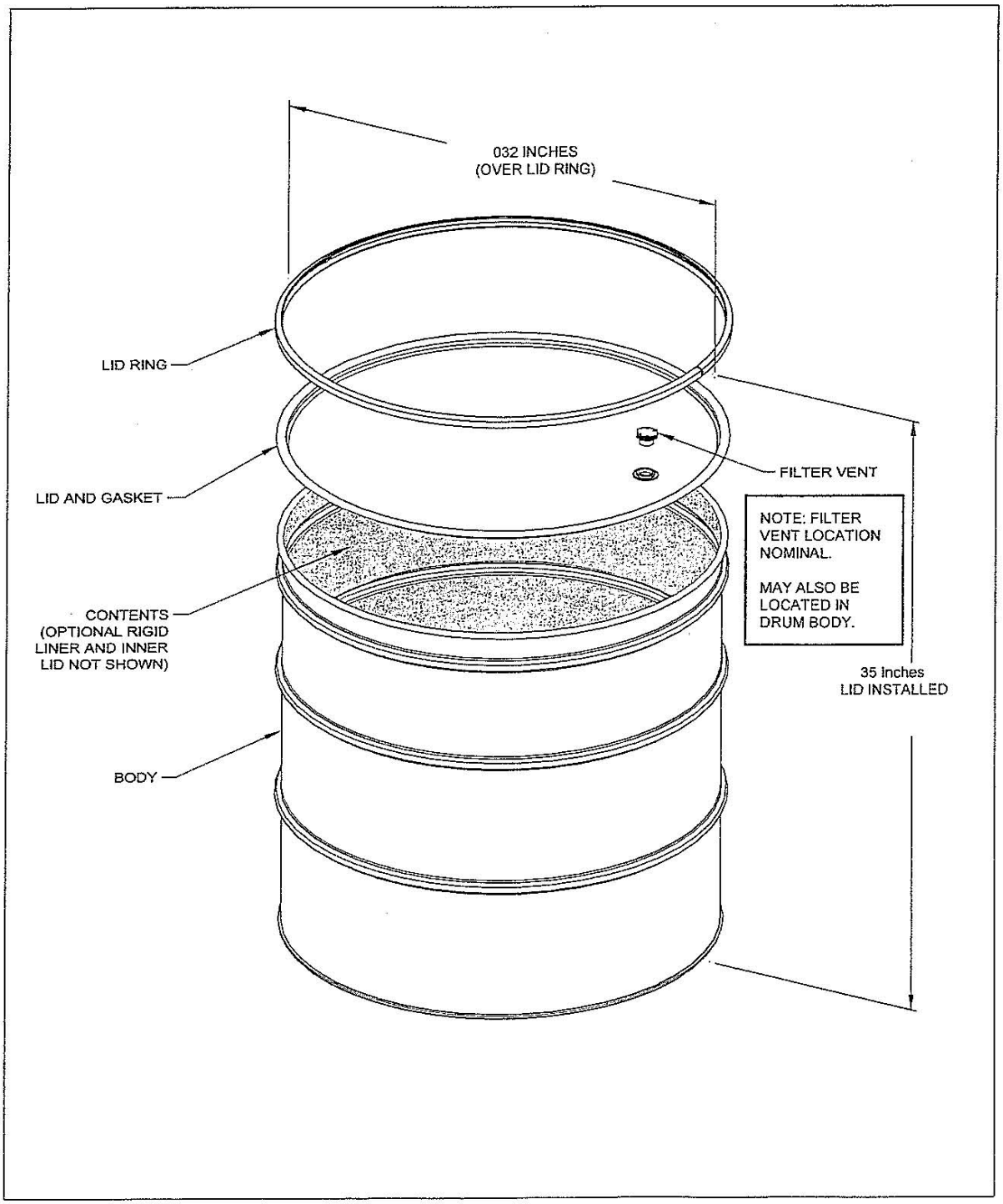

Figure A1-15
100-Gallon Drum

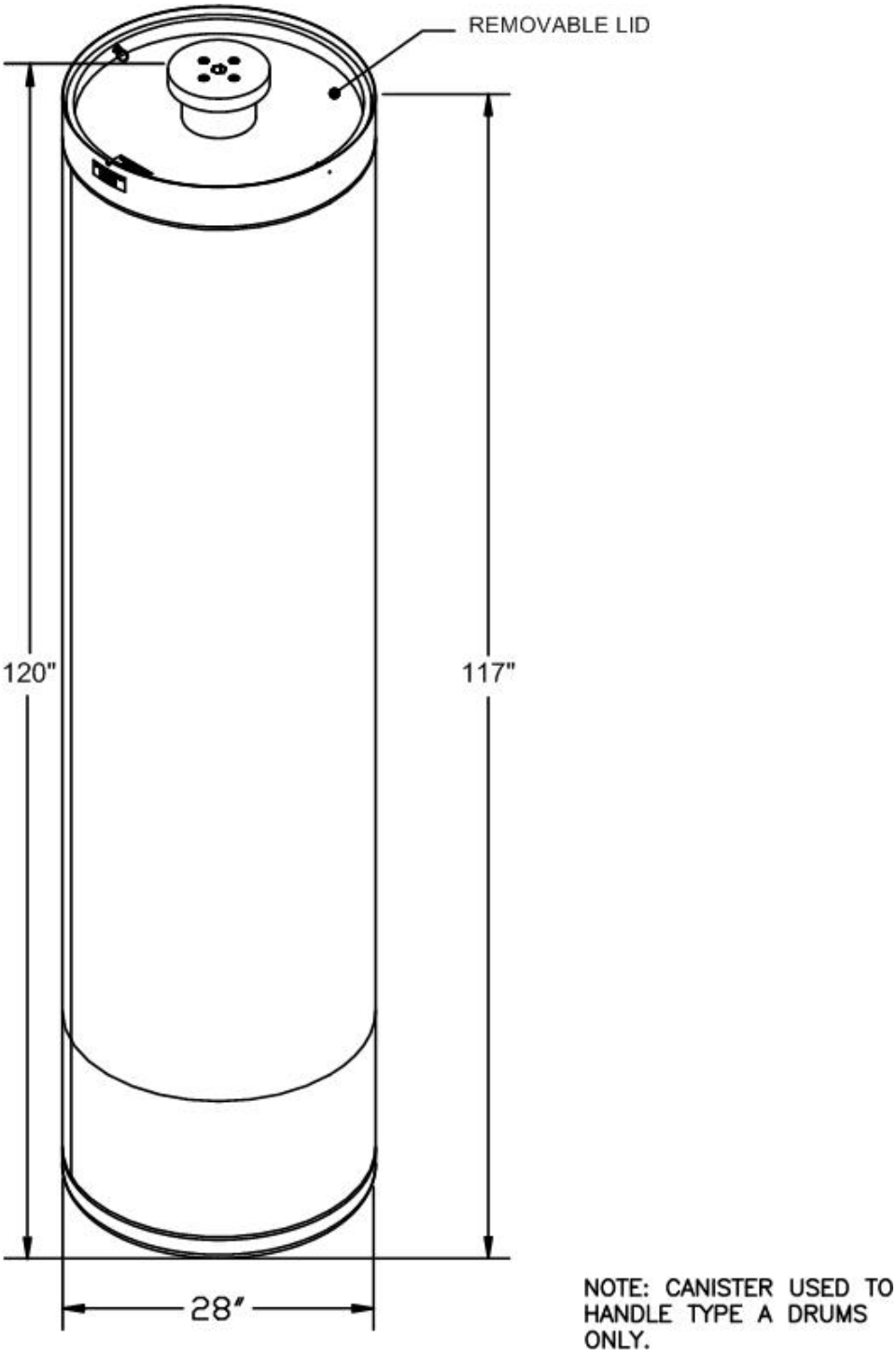

Figure A1-16
Facility Canister Assembly

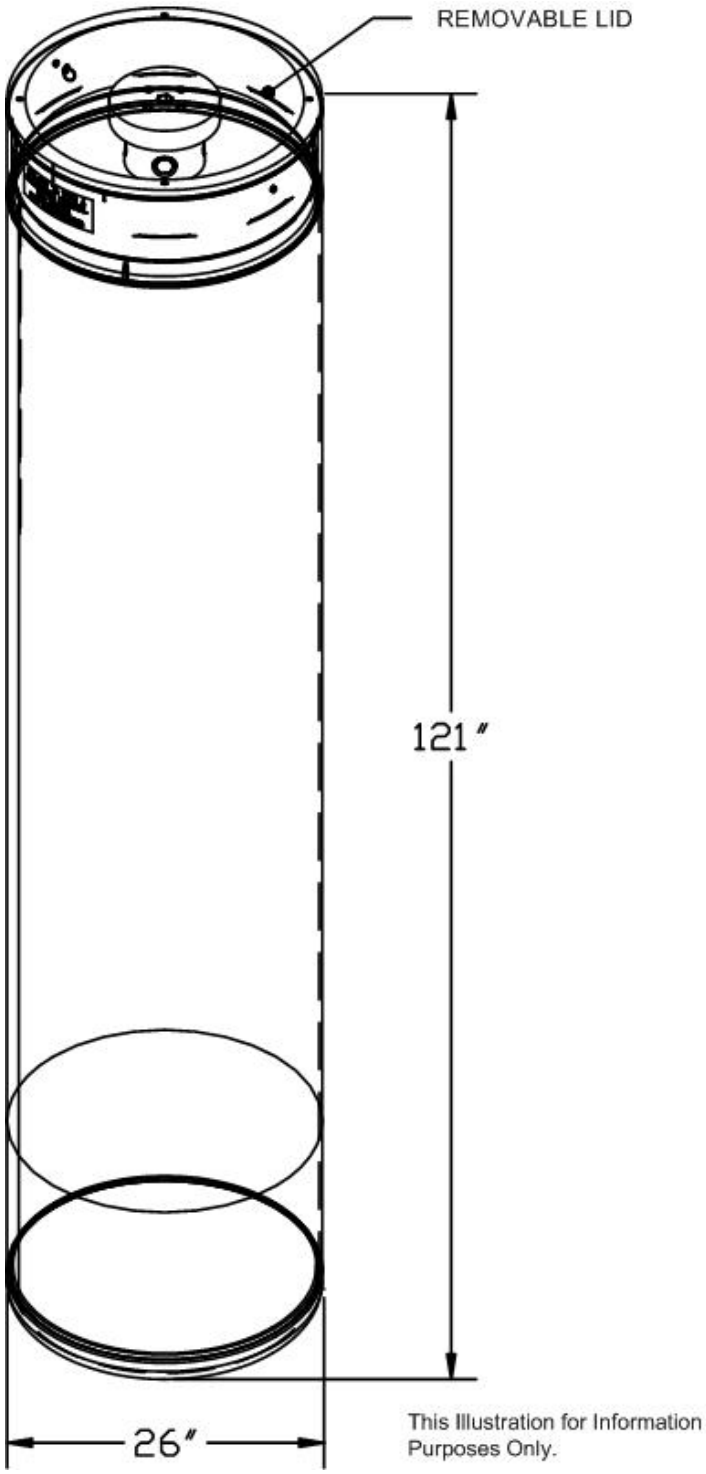

Figure A1-16a
RH-TRU 72-B Canister Assembly

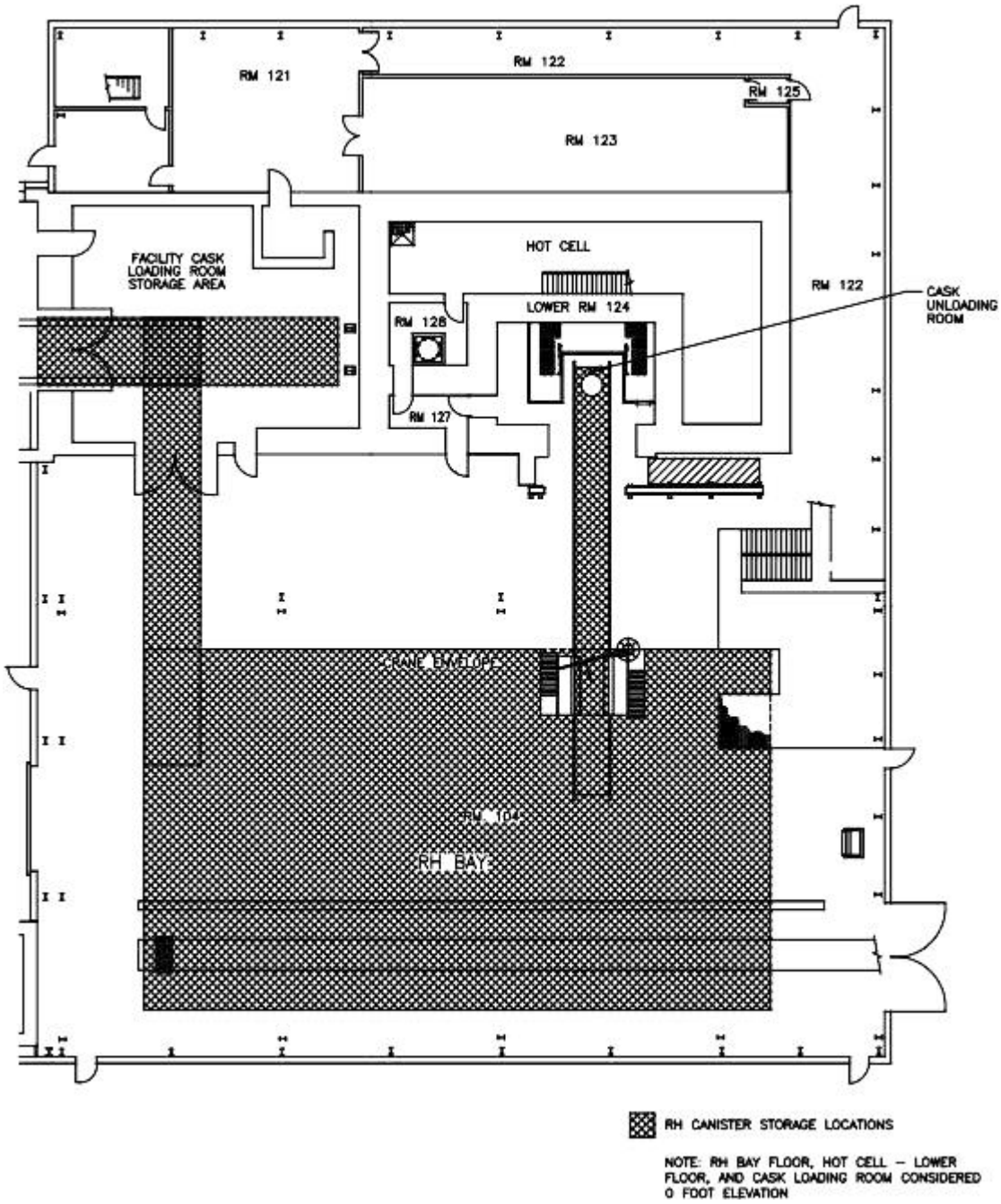

Figure A1-17a
RH Bay, Cask Unloading Room, Hot Cell, Facility Cask Loading Room

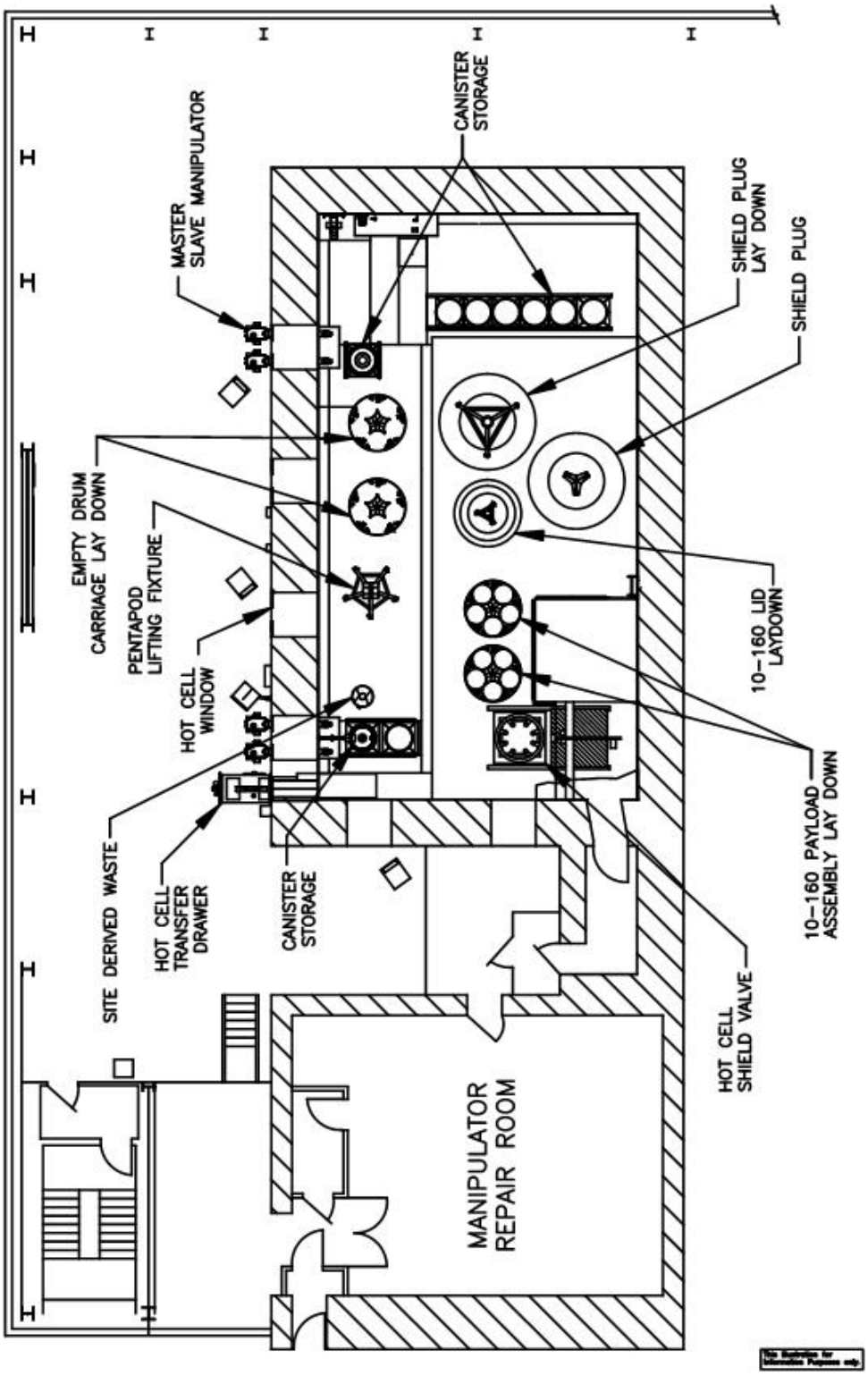

Figure A1-17b
RH Hot Cell Storage Area

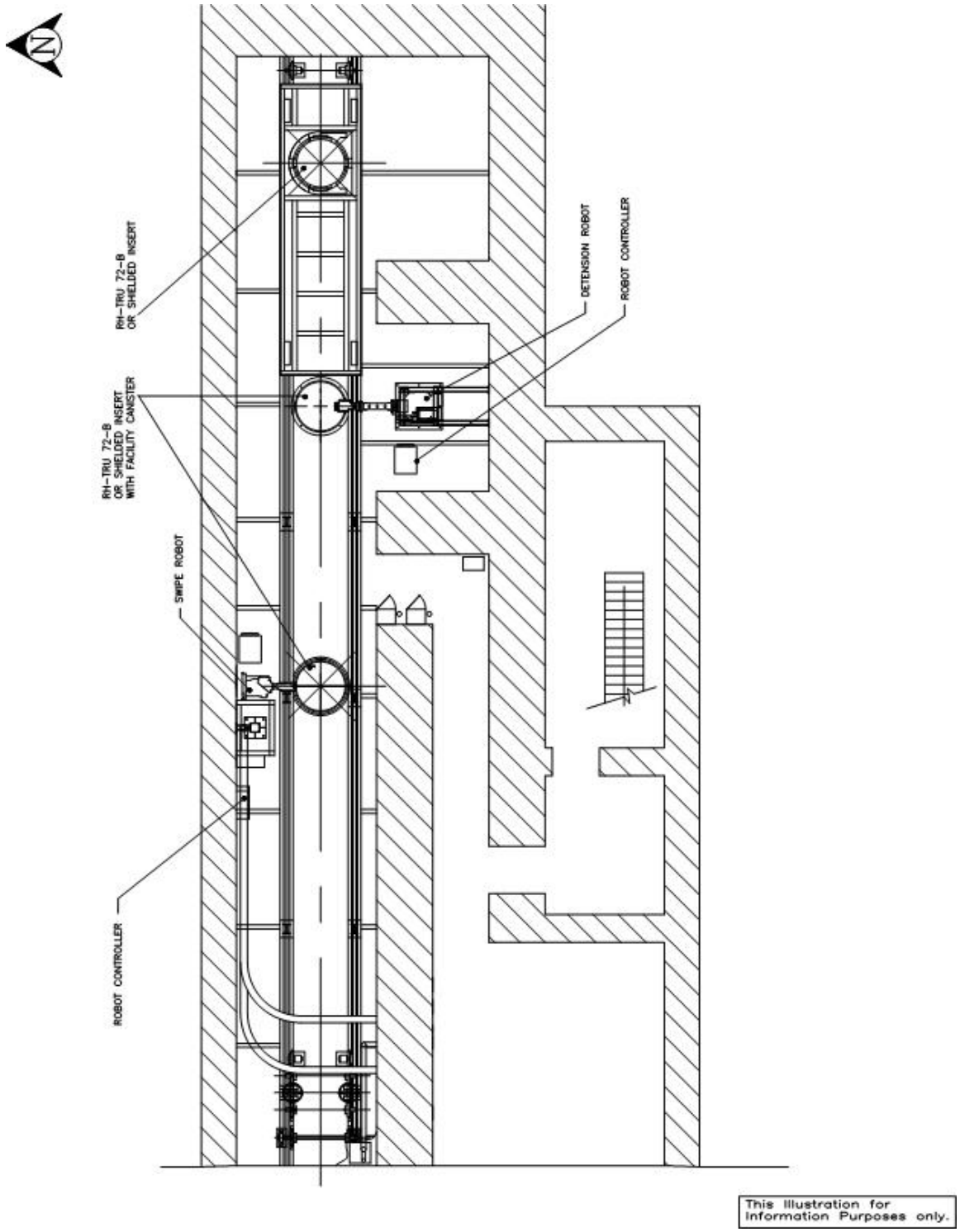

Figure A1-17c
RH Canister Transfer Cell Storage Area

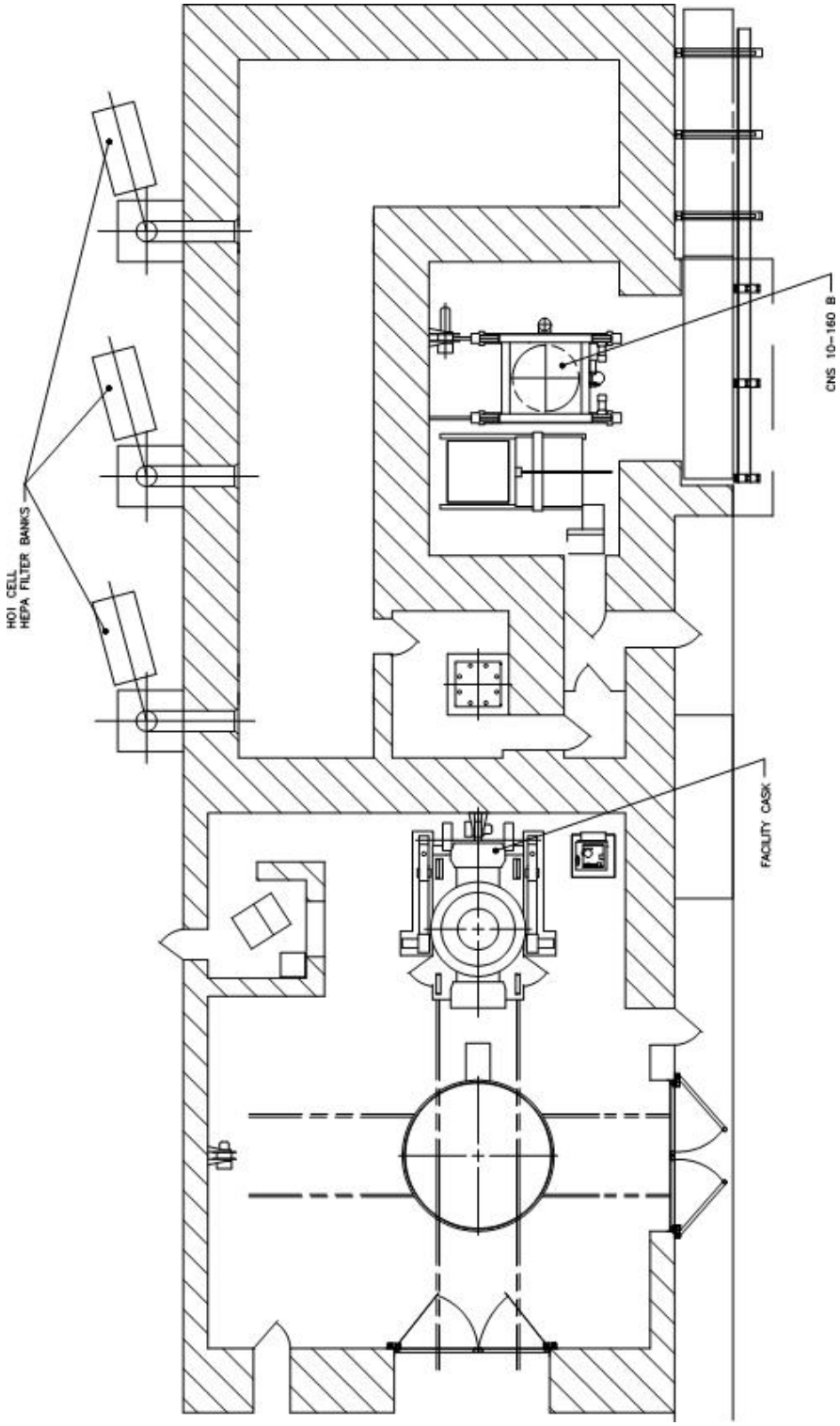

Figure A1-17d
RH Facility Cask Loading Room Storage Area

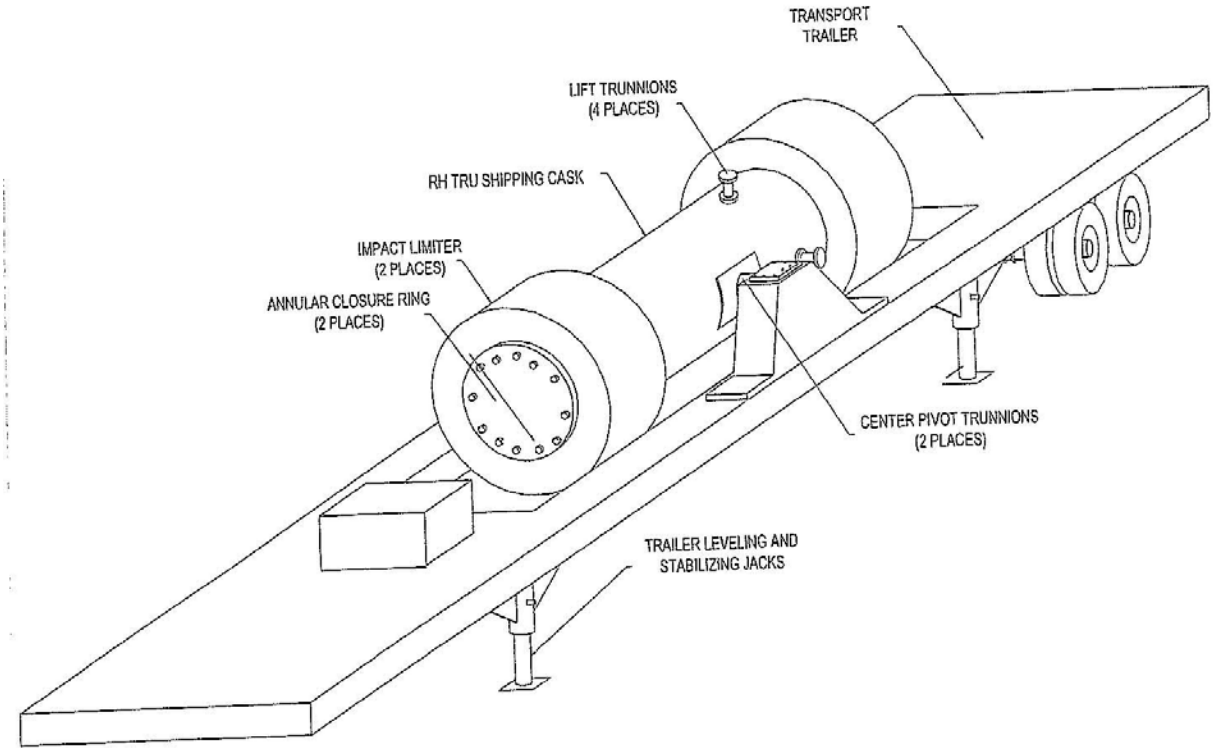

Figure A1-18
RH-TRU 72-B Shipping Cask on Trailer

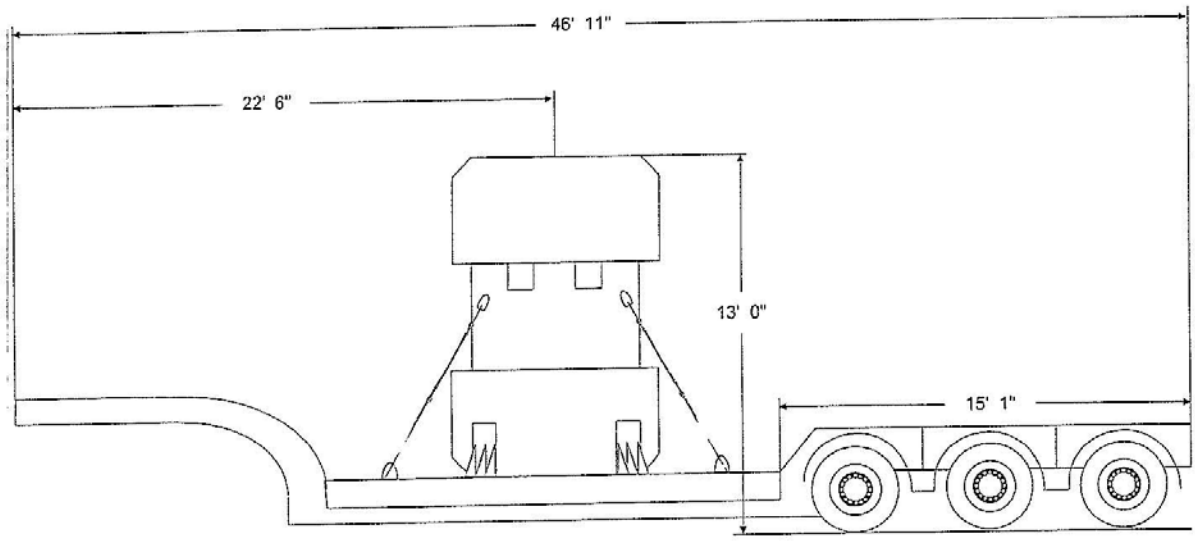

Figure A1-19
CNS 10-160B Shipping Cask on Trailer

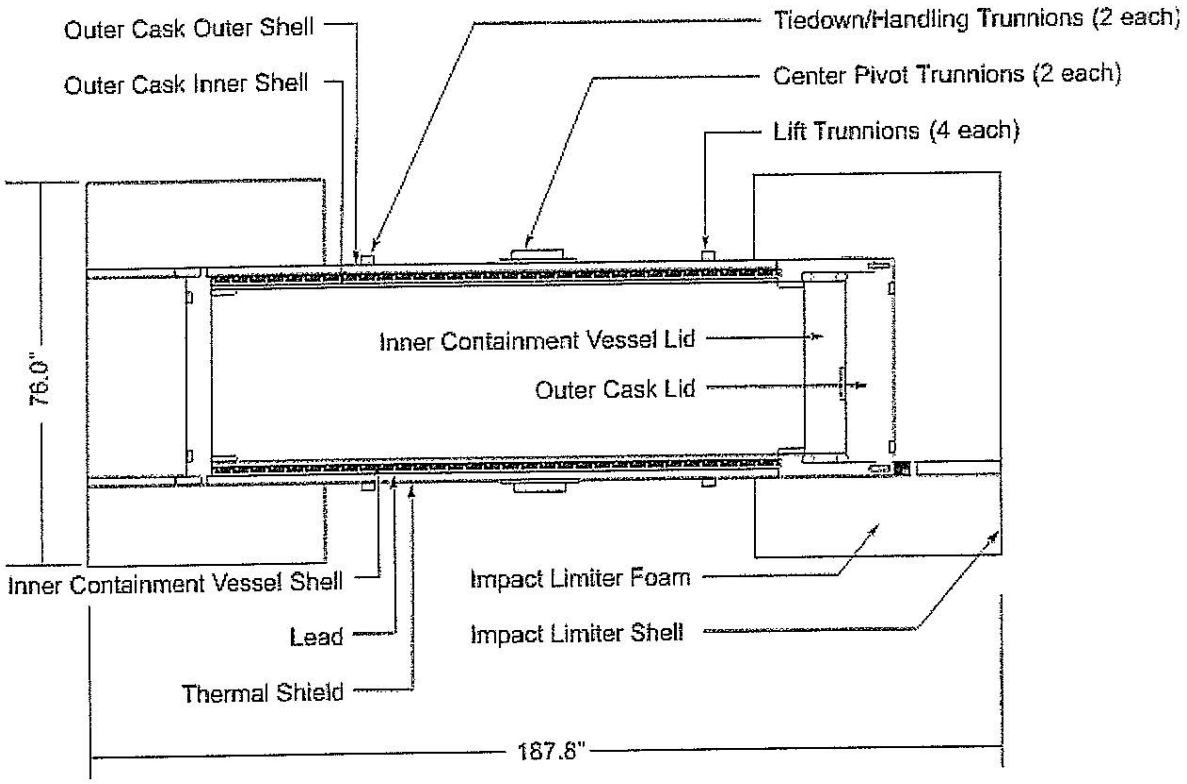

Figure A1-20
RH-TRU 72-B Shipping Cask for RH Transuranic Waste (Schematic)

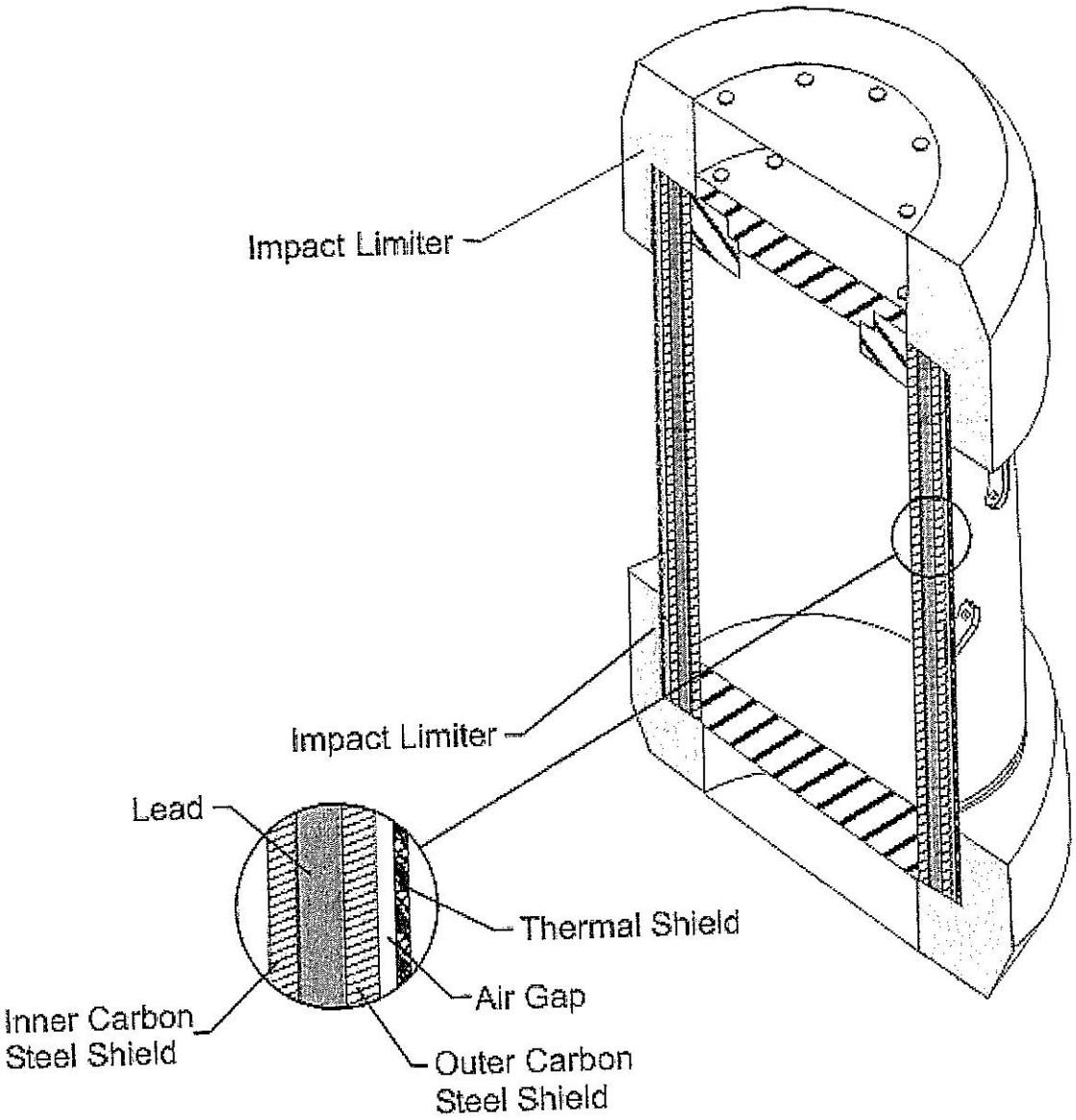

Figure A1-21
CNS 10-160B Shipping Cask for RH Transuranic Waste (Schematic)

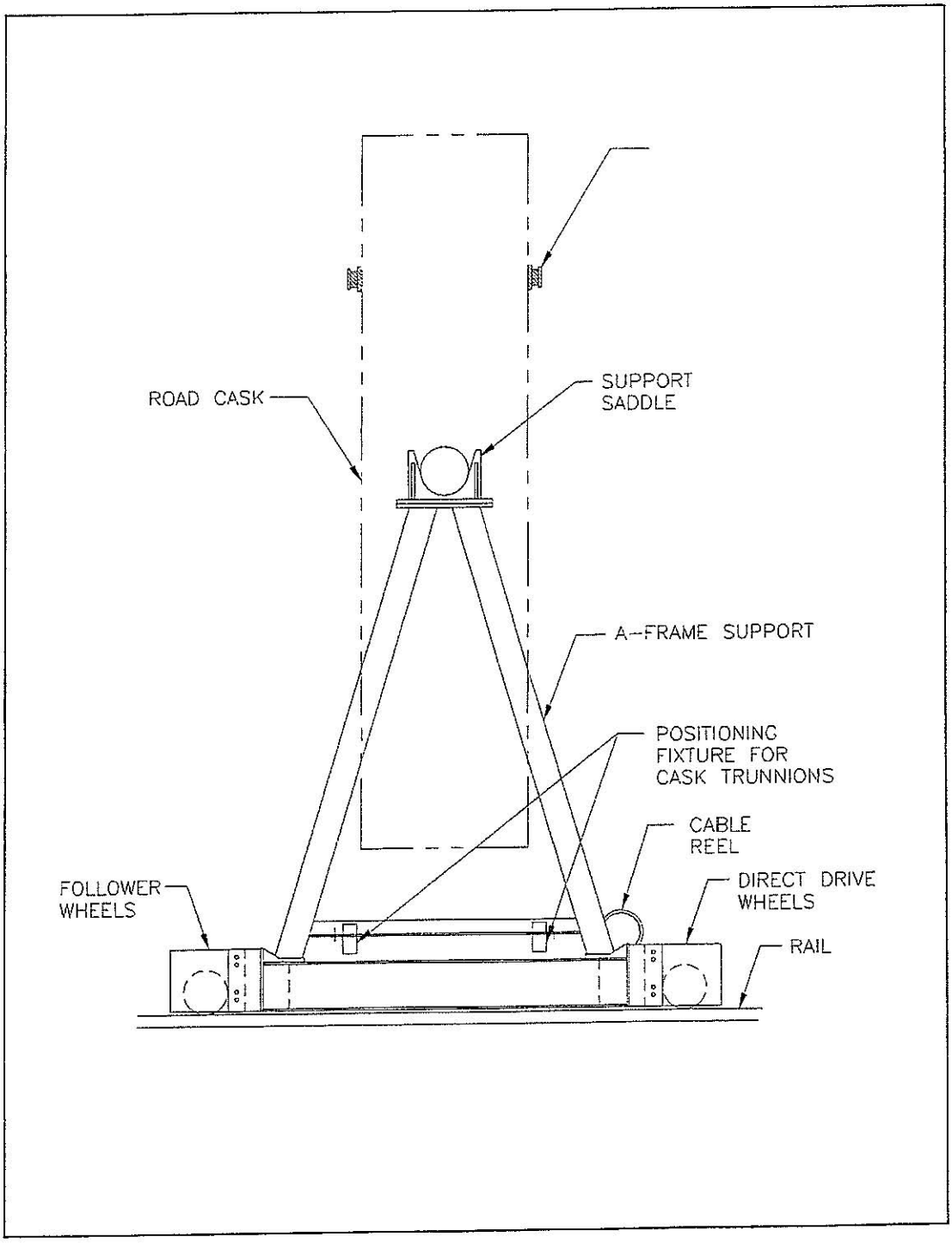

Figure A1-22a
RH-TRU 72-B Cask Transfer Car

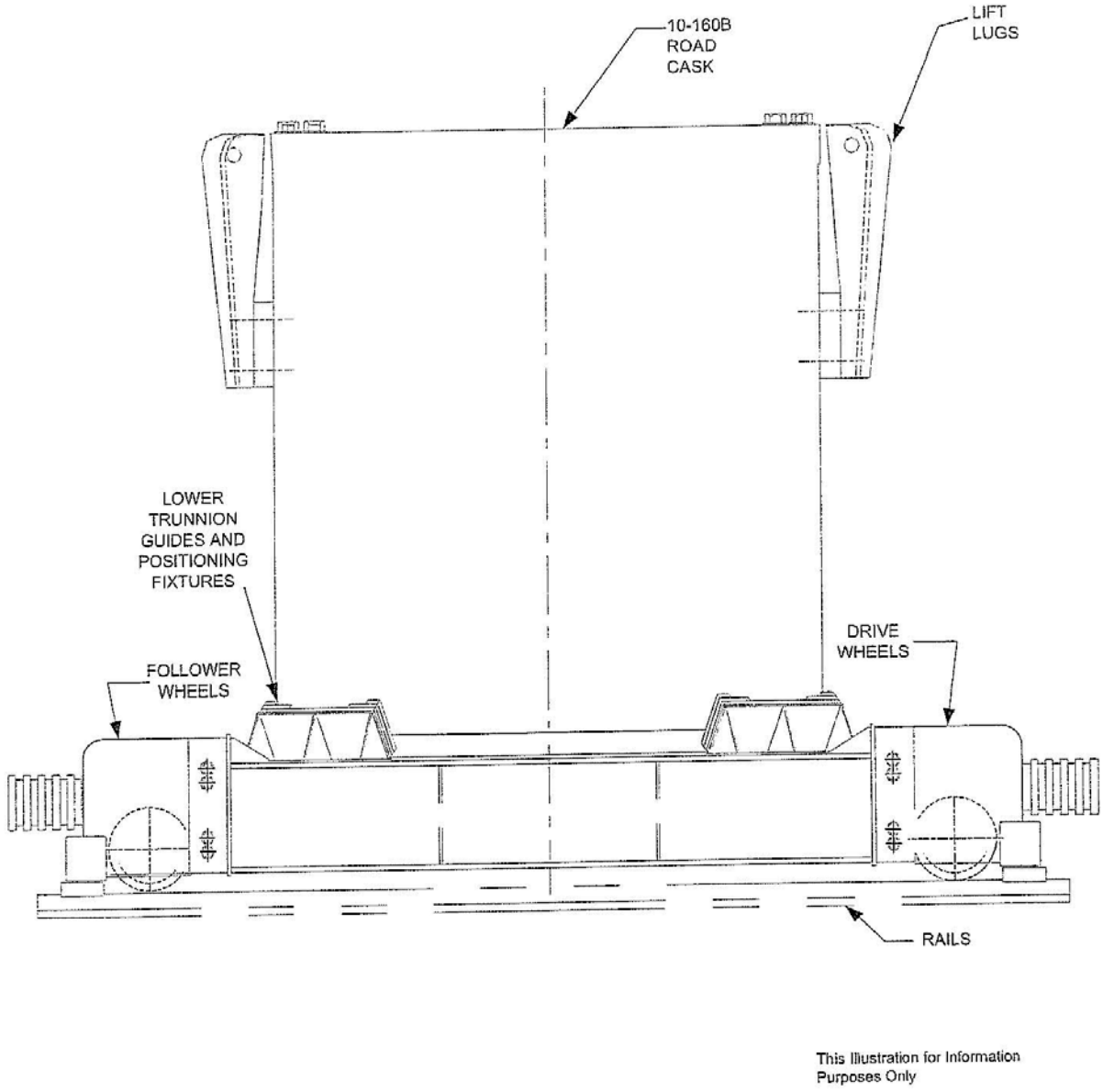

Figure A1-22b
CNS 10-160B Cask Transfer Car

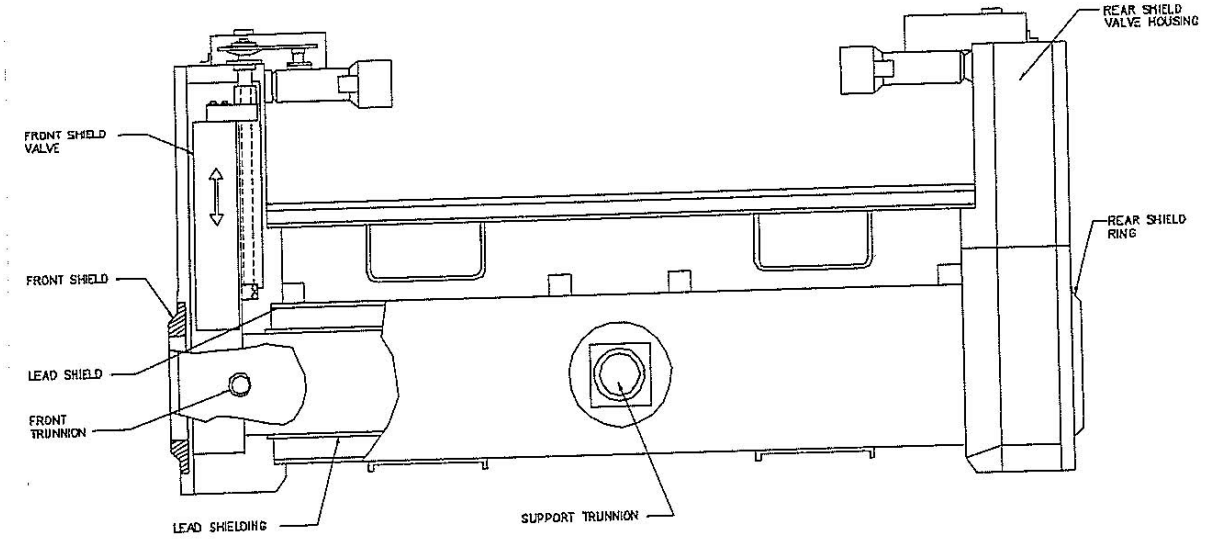

Figure A1-23
RH Transuranic Waste Facility Cask

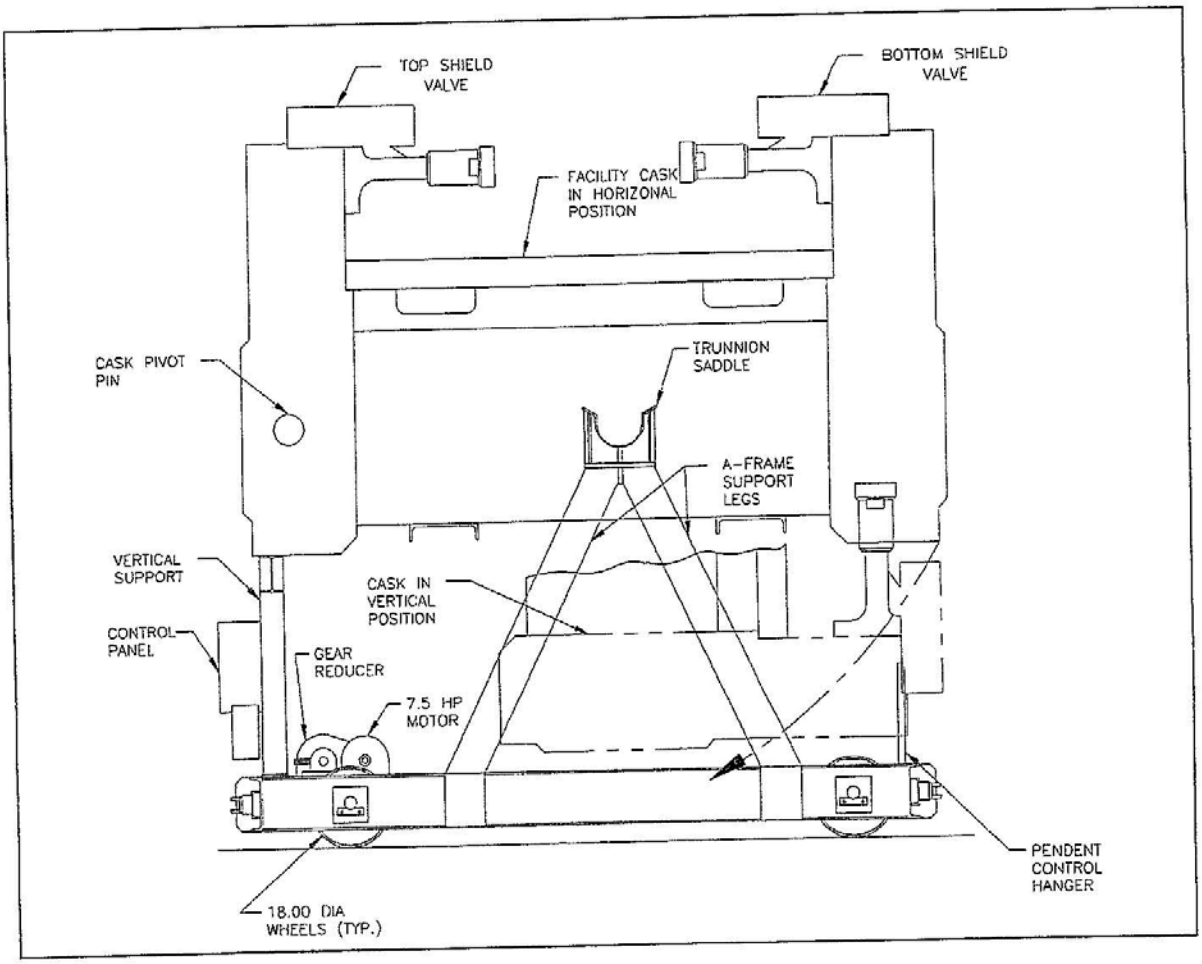

Figure A1-24
RH Facility Cask Transfer Car (Side View)

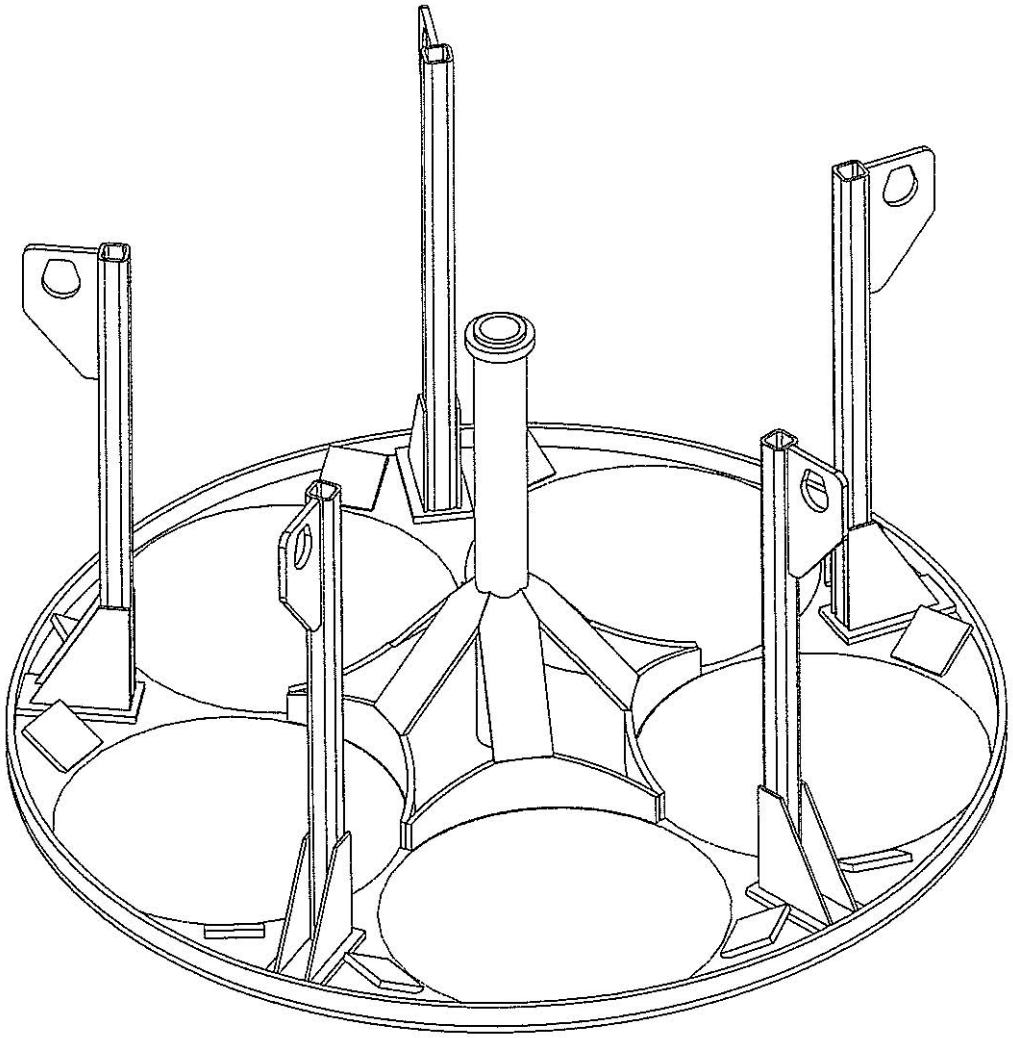

Figure A1-25
CNS 10-160B Drum Carriage

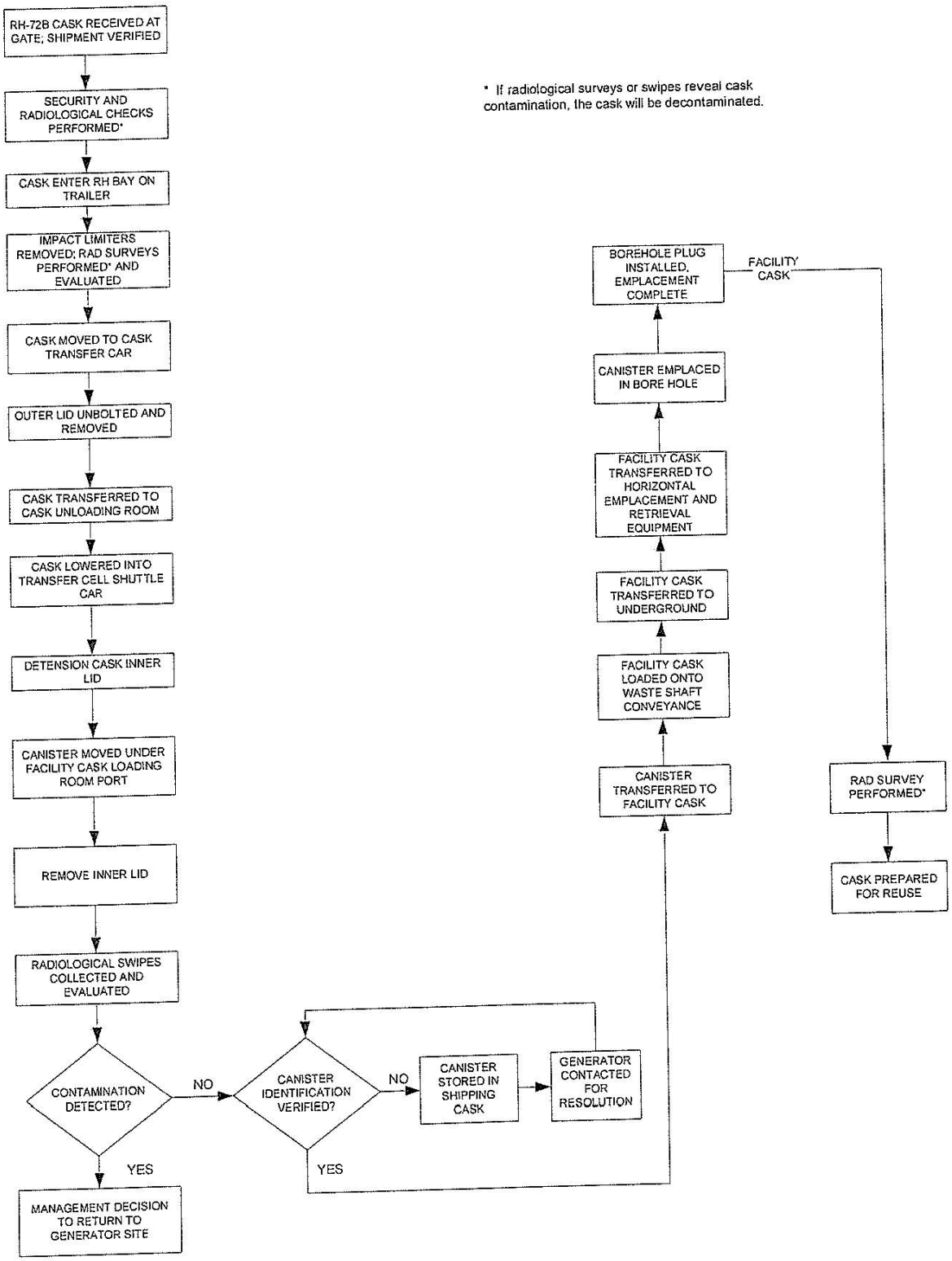

Figure A1-26
Surface and Underground RH Transuranic Mixed Waste Process Flow Diagram for RH-TRU 72-B Shipping Cask

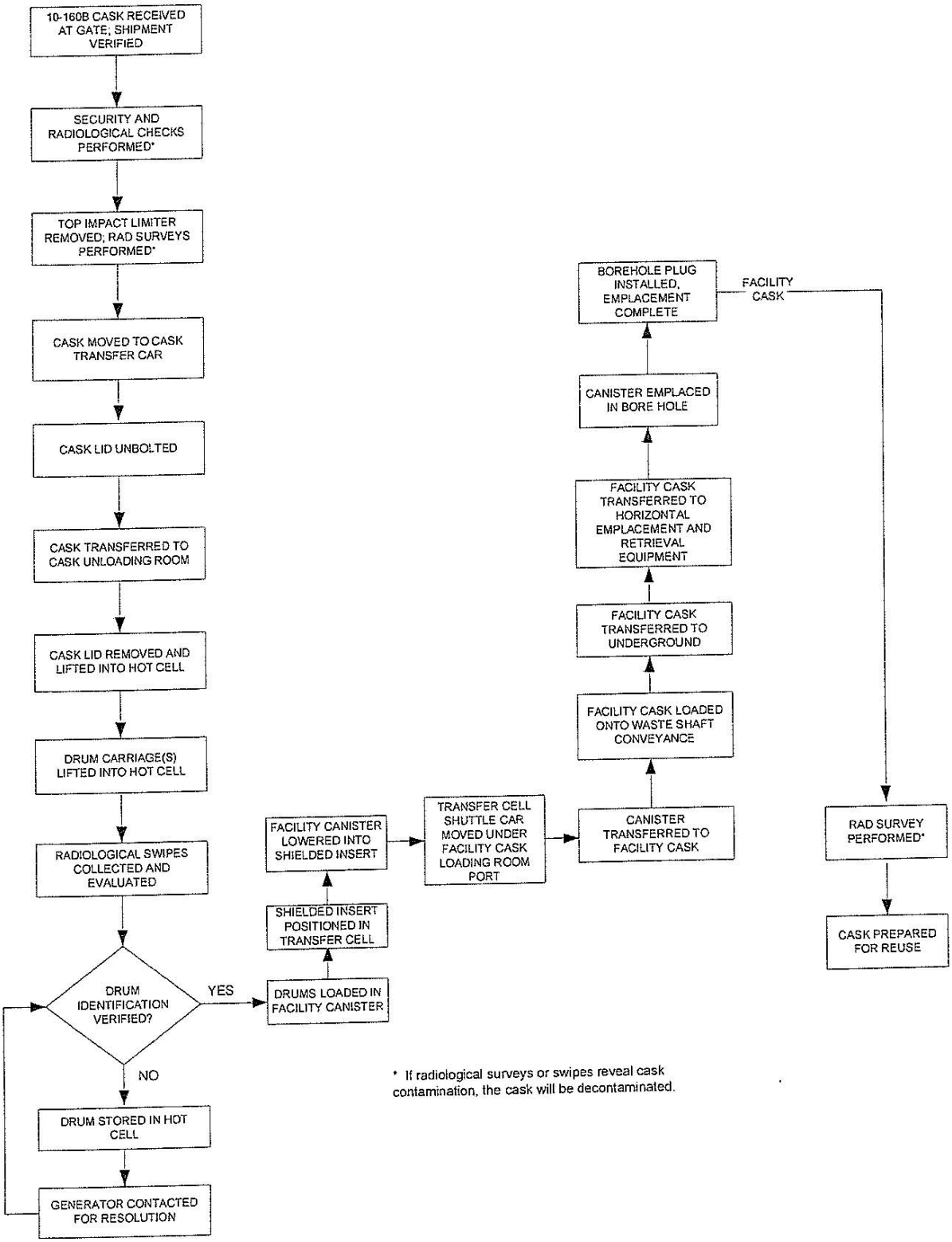

Figure A1-27
Surface and Underground RH Transuranic Mixed Waste Process Flow Diagram for CNS 10-160B Shipping Cask

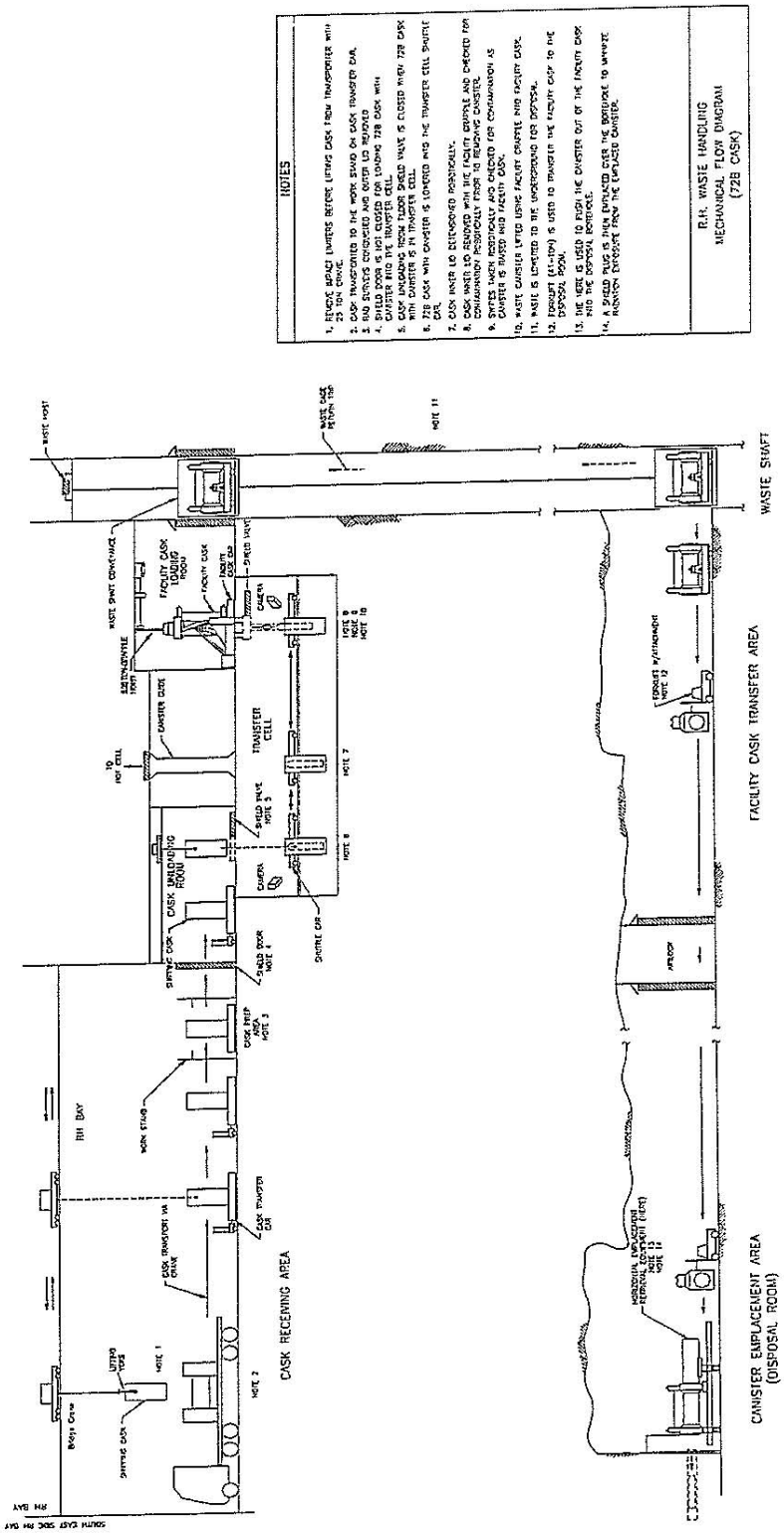

Figure A1-28
Schematic of the RH Transuranic Mixed Waste Process for RH-TRU 72-B Shipping Cask

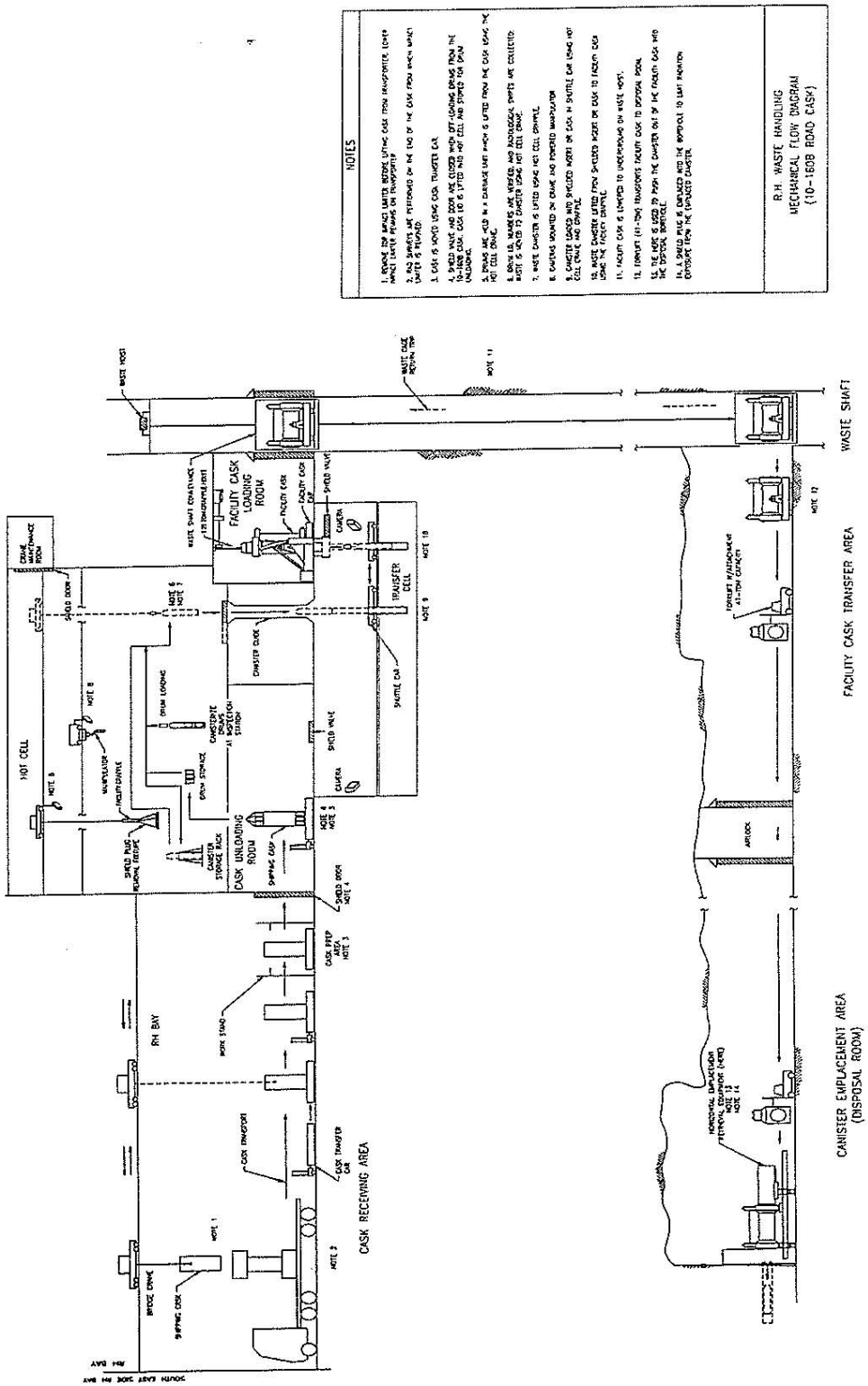

Figure A1-29
Schematic of the RH Transuranic Mixed Waste Process for CNS 10-160B Shipping Cask

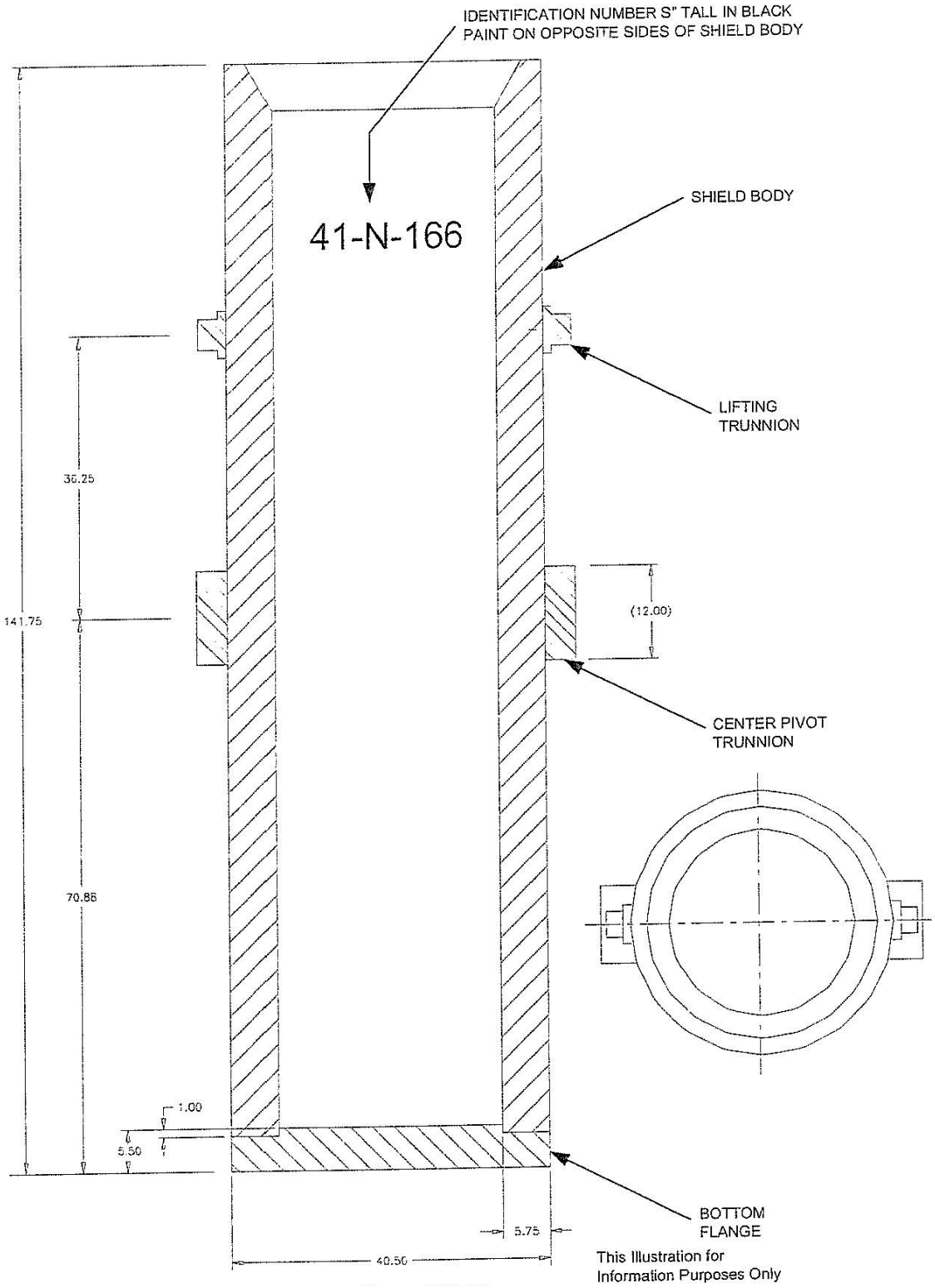

Figure A1-30
RH Shielded Insert Assembly

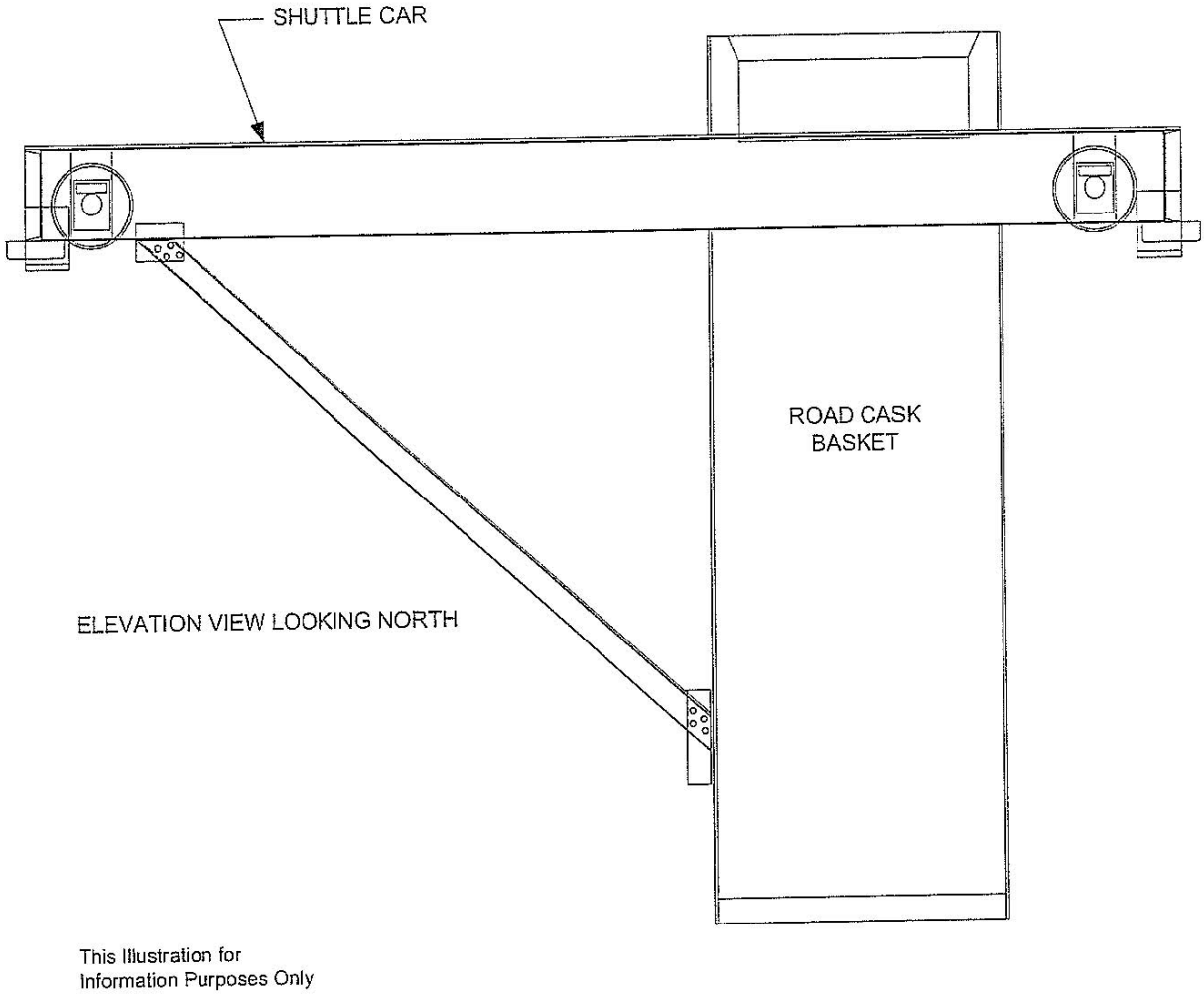

Figure A1-31
Transfer Cell Shuttle Car

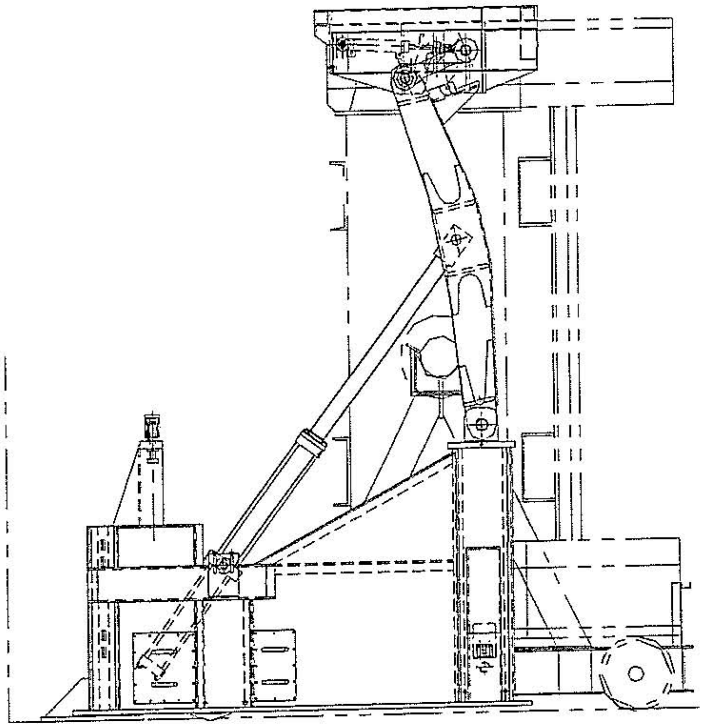

FRONT ELEVATION
CASK VERTICAL

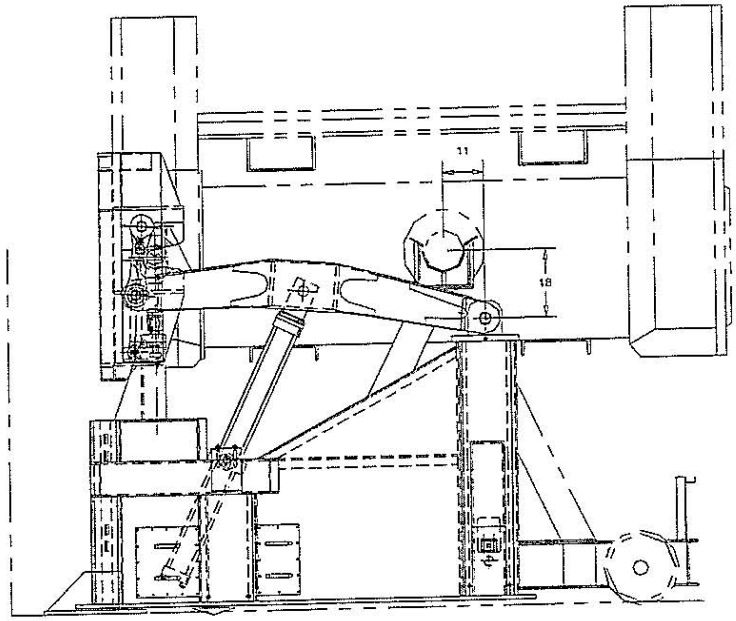

FRONT ELEVATION
CASK HORIZONTAL

This Illustration for
Information Purposes Only

Figure A1-32
Facility Rotating Device

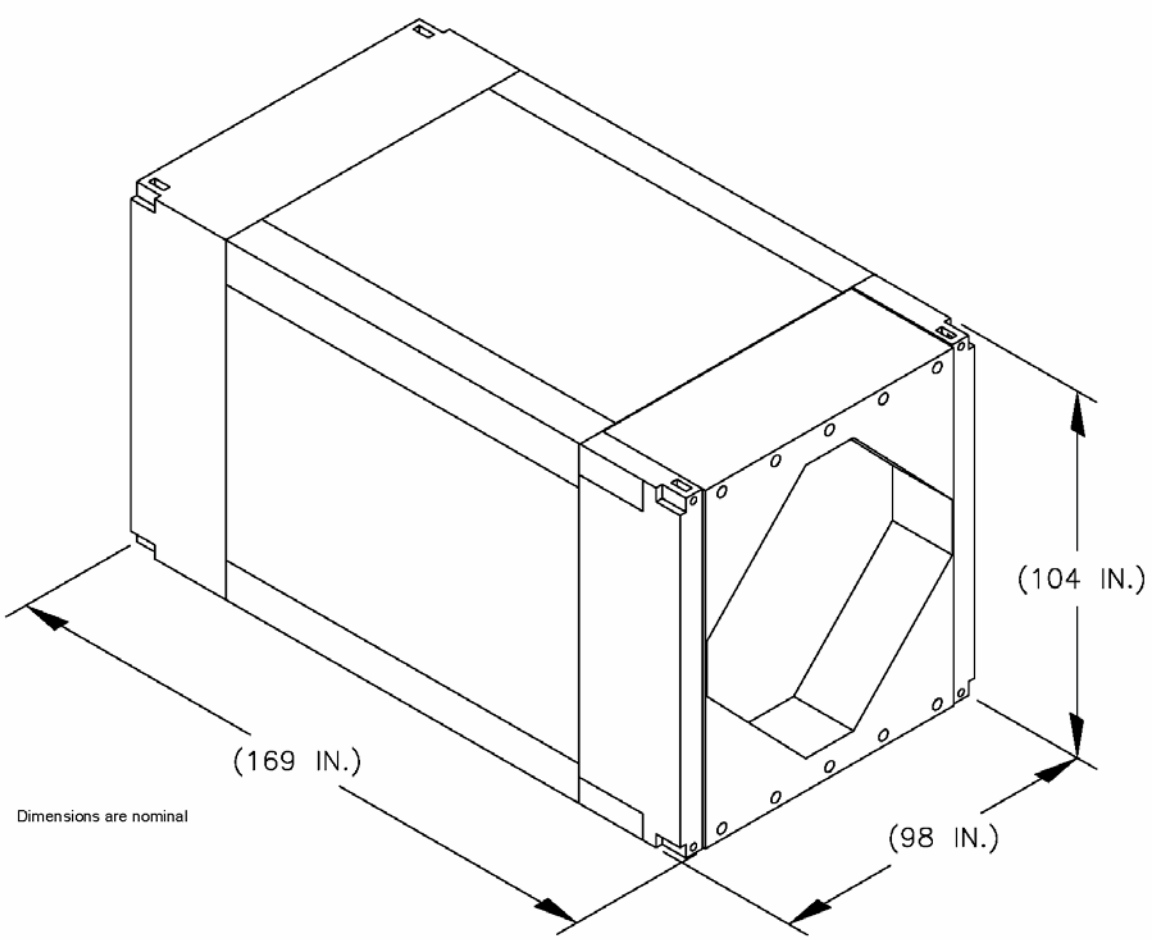

Figure A1-33
Typical TRUPACT-III

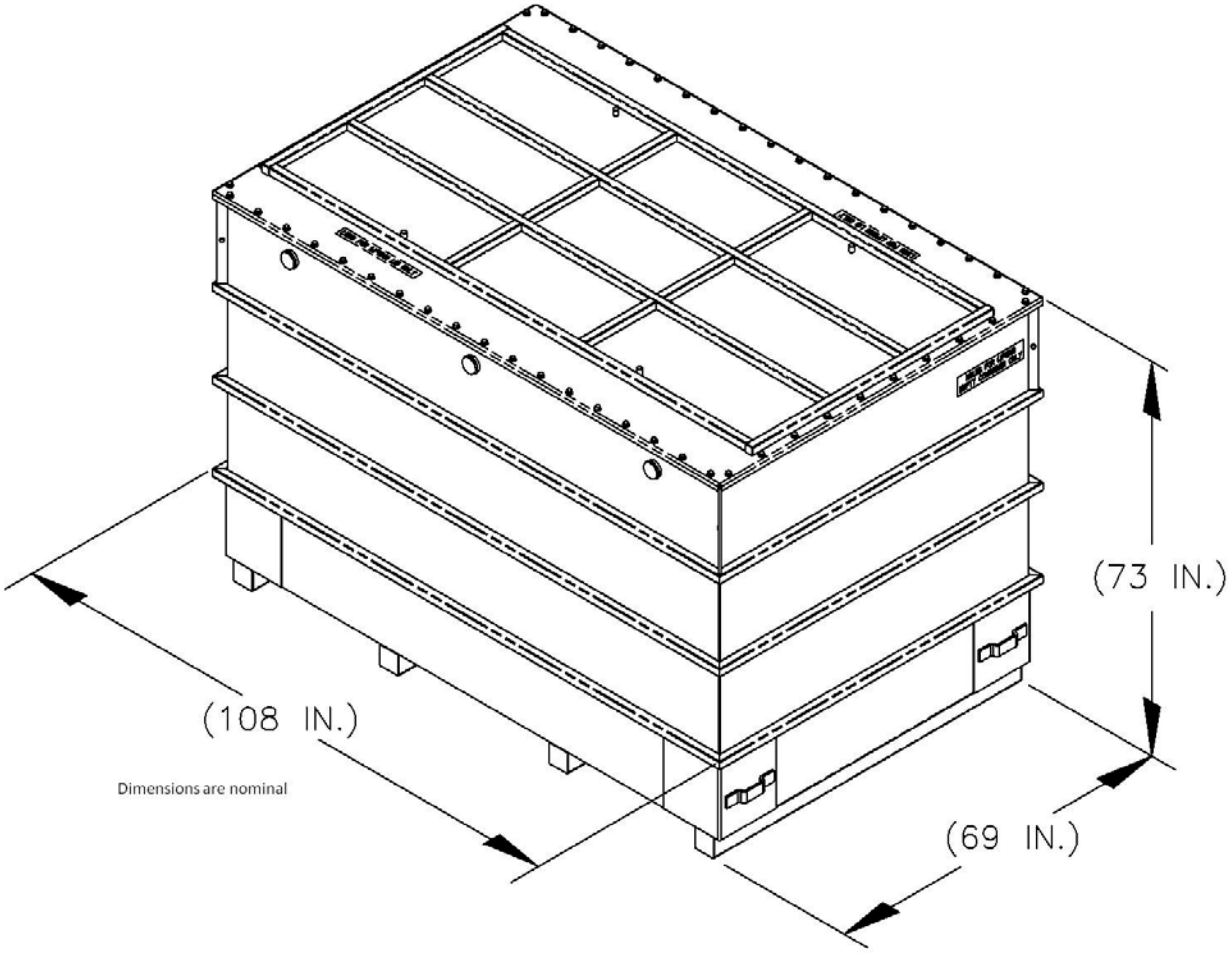

Figure A1-34
Typical Standard Large Box 2

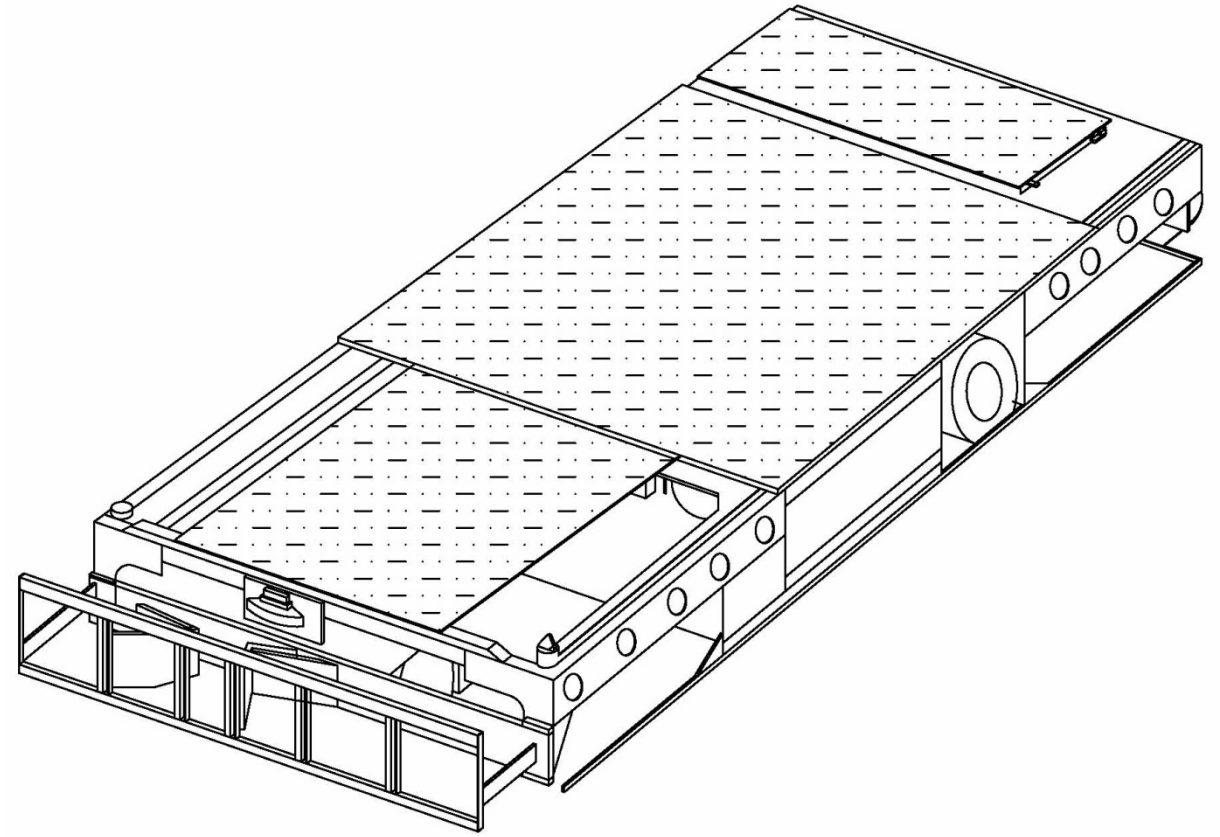

Figure A1-35
Typical Yard Transfer Vehicle

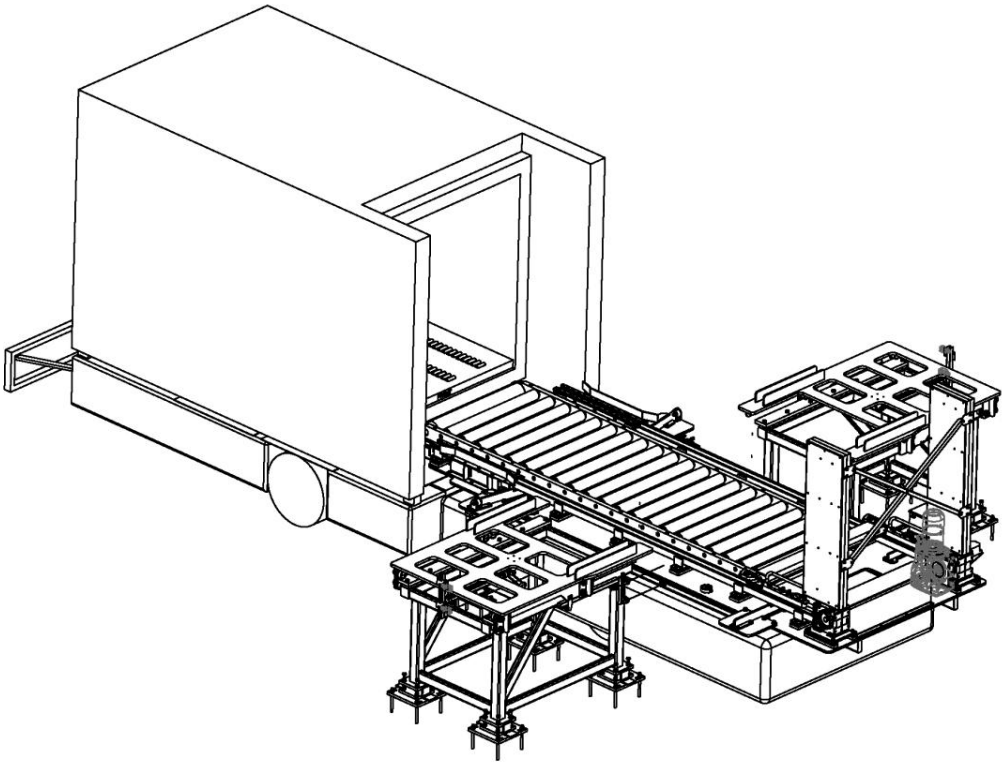

Figure A1-36
Payload Transfer Station

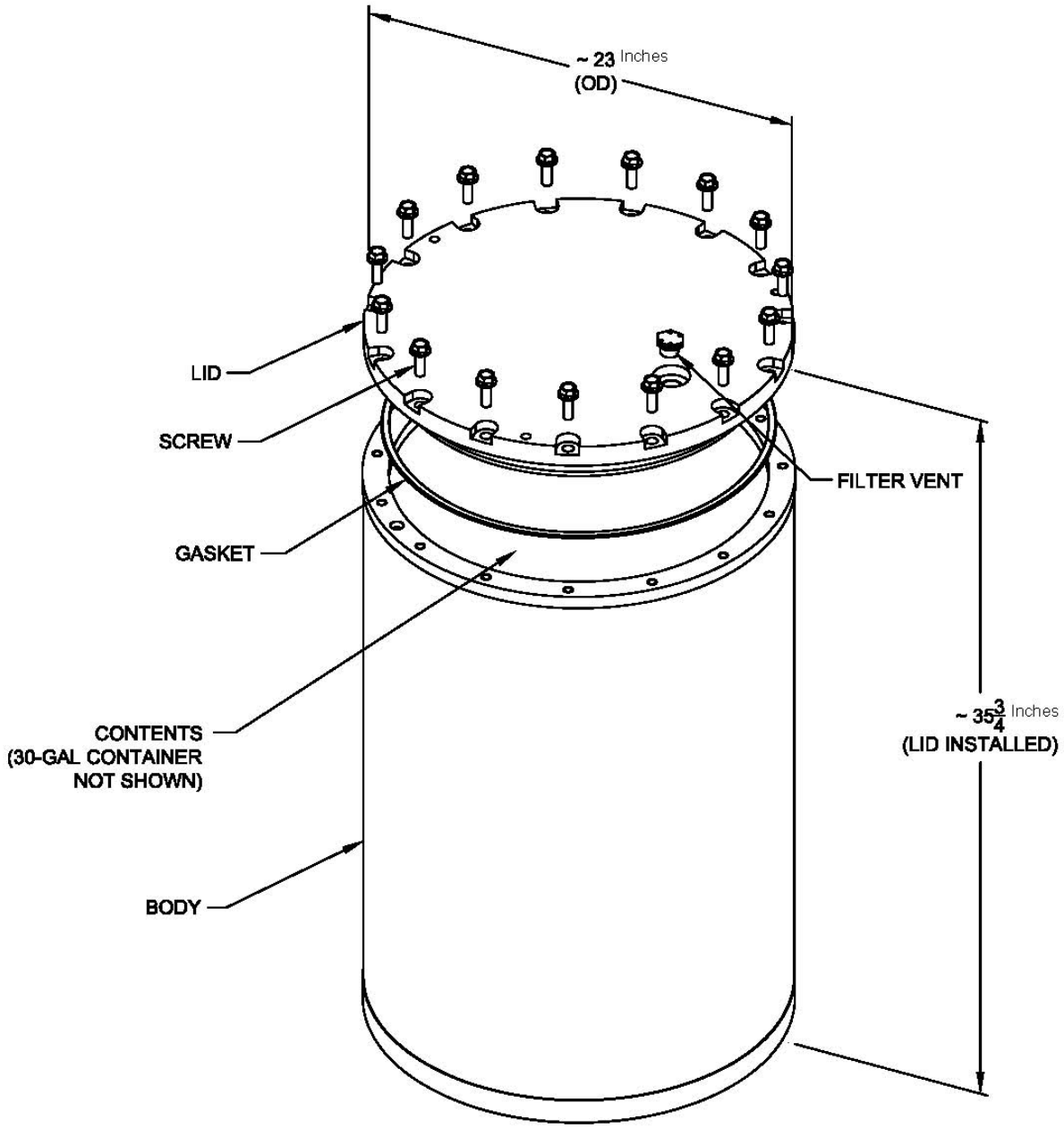

Figure A1-37
Typical Shielded Container