# ATTACHMENT A2

# GEOLOGIC REPOSITORY

(This page intentionally blank)

# ATTACHMENT A2

# GEOLOGIC REPOSITORY

## TABLE OF CONTENTS

A2-1 Description of the Geologic Repository ..... 1

A2-2 Geologic Repository Design and Process Description ..... 2
- A2-2a Geologic Repository Design and Construction ..... 2
  - A2-2a(1) CH TRU Mixed Waste Handling Equipment ..... 2
  - A2-2a(2) Shafts ..... 4
  - A2-2a(3) Subsurface Structures ..... 6
  - A2-2a(4) RH TRU Mixed Waste Handling Equipment ..... 10
- A2-2b Geologic Repository Process Description ..... 11

A2-3 Waste Characterization ..... 13

A2-4 Treatment Effectiveness ..... 13

A2-5 Maintenance, Monitoring, and Inspection ..... 13
- A2-5a Maintenance ..... 13
  - A2-5a(1) Ground-Control Program ..... 13
- A2-5b Monitoring ..... 14
  - A2-5b(1) Groundwater Monitoring ..... 14
  - A2-5b(2) Geomechanical Monitoring ..... 14
    - A2-5b(2)(a) Description of the Geomechanical Monitoring System ..... 14
    - A2-5b(2)(b) System Experience ..... 15
  - A2-5b(3) Volatile Organic Compound Monitoring ..... 16
- A2-5c Inspection ..... 16

References ..... 16

## LIST OF TABLES


| Table | Title |
|---|---|
| Table A2-1 | CH TRU Mixed Waste Handling Equipment Capacities |
| Table A2-2 | Instrumentation Used in Support of the Geomechanical Monitoring System |
| Table A2-3 | RH TRU Mixed Waste Handling Equipment Capacities |


## LIST OF FIGURES


| Figure | Title |
|---|---|
| Figure A2-1 | Repository Horizon |
| Figure A2-2 | Spatial View of the Miscellaneous Unit and Waste Handling Facility |
| Figure A2-3 | Facility Pallet for Seven-Pack of Drums |
| Figure A2-5 | Typical Backfill Sacks Emplaced on Drum Stacks |
| Figure A2-5a | Potential MgO Emplacement Configurations |
| Figure A2-6 | Waste Transfer Cage to Transporter |
| Figure A2-7 | Push-Pull Attachment to Forklift to Allow Handling of Waste Containers |
| Figure A2-8 | Typical RH and CH Transuranic Mixed Waste Container Disposal Configuration |
| Figure A2-9 | Underground Ventilation System Airflow |
| Figure A2-11 | Typical Room Barricade |
| Figure A2-11a | Typical Bulkhead |
| Figure A2-12 | WIPP Facility Surface and Underground CH Transuranic Mixed Waste Process Flow Diagram |
| Figure A2-12 | WIPP Facility Surface and Underground CH Transuranic Mixed Waste Process Flow Diagram (Continued) |
| Figure A2-13 | Layout and Instrumentation - As of 1/96 |
| Figure A2-14 | Facility Cask Transfer Car (Side View) |
| Figure A2-15 | Typical Horizontal Emplacement Equipment |
| Figure A2-15a | Typical Horizontal Emplacement Equipment |
| Figure A2-16 | RH TRU Waste Facility Cask Unloading from Waste Shaft Conveyance |
| Figure A2-17 | Facility Cask Installed on the Typical Emplacement Equipment |
| Figure A2-18 | Installing Shield Plug |
| Figure A2-19 | Shield Plug Supplemental Shielding Plate(s) |
| Figure A2-20 | Shielding Layers to Supplement RH Borehole Shield Plugs |
| Figure A2-21 | Shield Plug Configuration |

# ATTACHMENT A2

# GEOLOGIC REPOSITORY

## A2-1 Description of the Geologic Repository

Management, storage, and disposal of transuranic (**TRU**) mixed waste in the Waste Isolation Pilot Plant (**WIPP**) geologic repository is subject to regulation under 20.4.1.500 NMAC. The WIPP is a geologic repository mined within a bedded salt formation, which is defined in 20.4.1.101 NMAC (incorporating 40 CFR §260.10) as a miscellaneous unit. As such, HWMUs within the repository are eligible for permitting according to 20.4.1.101 NMAC (incorporating 40 CFR §260.10), and are regulated under 20.4.1.500 NMAC, Miscellaneous Units.

As required by 20.4.1.500 NMAC (incorporating 40 CFR §264.601), the Permittees shall ensure that the environmental performance standards for a miscellaneous unit, which are applied to the Underground Hazardous Waste Disposal Units (**HWDUs**) in the geologic repository, will be met.

The Disposal Phase will consist of receiving contact-handled (**CH**) and remote-handled (**RH**) TRU mixed waste shipping containers, unloading and transporting the waste containers to the Underground HWDUs, emplacing the waste in the Underground HWDUs, and subsequently achieving closure of the Underground HWDUs in compliance with applicable State and Federal regulations.

The WIPP geologic repository is mined within a 2,000-feet (ft) (610-meters (m))-thick bedded-salt formation called the Salado Formation. The Underground HWDUs (miscellaneous units) are located 2,150 ft (655 m) beneath the ground surface. TRU mixed waste management activities underground will be confined to the southern portion of the 120-acre (48.6 hectares) mined area during the Disposal Phase. During the term of this Permit, disposal of TRU mixed waste will occur only in the HWDUs designated as Panels 5 through 8 and in any currently active panel (See Figure A2-1). RH TRU mixed waste disposal began in Panel 4. The Permittees may also request in the future a Permit to allow disposal of containers of TRU mixed waste in the areas designated as Panels 9 and 10 in Figure A2-1. This Permit, during its 10-year term, authorizes the excavation of Panels 6 through 10 and the disposal of waste in Panels 1 through 8.

Panels 1 through 8 will consist of seven rooms and two access drifts each. Panels 9 and 10 have yet to be designed. Access drifts connect the rooms and have the same cross section (see Section A2-2a(3)). The closure system installed in each HWDU after it is filled will prevent anyone from entering the HWDU and will restrict ventilation airflow. The point of compliance for air emissions from the Underground is Sampling Station VOC-C, as defined in Permit Attachment N (Volatile Organic Compound Monitoring Plan). Sampling Station VOC-C is the location where the concentration of volatile organic compounds (VOCs) in the air emissions from the Underground HWDUs will be measured and then compared to the VOC action levels ($10^{-5}$ for carcinogens and HI>1 for non-carcinogens) as required by Permit Part 4, Section 4.6.2.3.

Four shafts connect the underground area with the surface. The Waste Shaft Conveyance headframe and hoist are located within the Waste Handling Building (**WHB**) and will be used to transport containers of TRU mixed waste, equipment, and materials to the repository horizon. The waste hoist can also be used to transport personnel. The Air Intake Shaft and the Salt

Handling Shaft provide ventilation to all areas of the mine except for the Waste Shaft Station. This area is ventilated by the Waste Shaft itself. The Salt Handling Shaft is also used to hoist mined salt to the surface and serves as the principal personnel transport shaft. The Exhaust Shaft serves as a common exhaust air duct for all areas of the mine. The relationship between the WIPP surface facility, the four shafts, and the geologic repository horizon is shown on Figure A2-2.

The HWDUs identified as Panels 1 through 8 (Figure A2-1) provide room for up to 5,244,900 cubic feet ($ft^3$) (148,500 cubic meters ($m^3$)) of CH TRU mixed waste. The CH TRU mixed waste containers may be stacked up to three high across the width of the room.

Panels 4 through 8 provide room for up to 93,050 $ft^3$ (2,635 $m^3$) of RH TRU mixed waste. RH TRU mixed waste may be disposed of in up to 730 boreholes per panel, subject to the limitations in Permit Part 4, Section 4.1.1.2.ii. These boreholes shall be drilled on nominal eight-foot centers, horizontally, about mid-height in the ribs of a disposal room. The thermal loading from RH TRU mixed waste shall not exceed 10 kilowatts per acre when averaged over the area of a panel, as shown in Permit Attachment A3, plus 100 feet of each of a Panel's adjoining barrier pillars.

The WIPP facility is located in a sparsely populated area with site conditions favorable to isolation of TRU mixed waste from the biosphere. Geologic and hydrologic characteristics of the site related to its TRU mixed waste isolation capabilities are discussed in Addendum L1 of the WIPP Hazardous Waste Facility Permit Amended Renewal Application (DOE, 2009). Hazard prevention programs are described in this Permit Attachment. Contingency and emergency response actions to minimize impacts of unanticipated events, such as spills, are described in Permit Attachment D. The closure plan for the WIPP facility is described in Permit Attachment G.

## A2-2 Geologic Repository Design and Process Description

### A2-2a Geologic Repository Design and Construction

The WIPP facility, when operated in compliance with the Permit, will ensure safe operations and be protective of human health and the environment.

As a part of the design validation process, geomechanical tests were conducted in SPDV test rooms. During the tests, salt creep rates were measured. Separation of bedding planes and fracturing were also observed. Consequently, a ground-control strategy was implemented. The ground-control program at the WIPP facility mitigates the potential for roof or rib falls and maintains normal excavation dimensions, as long as access to the excavation is possible.

#### A2-2a(1) CH TRU Mixed Waste Handling Equipment

The following are the major pieces of equipment used to manage CH TRU waste in the geologic repository. A summary of equipment capacities, as required by 20.4.1.500 NMAC is included in Table A2-1.

Facility Pallets

The facility pallet is a fabricated steel unit designed to support 7-packs, 3-packs, or 4-packs of drums, standard waste boxes (**SWBs**), ten-drum overpacks (**TDOPs**), or a standard large box 2 (**SLB2**), and has a rated load of 25,000 pounds (lbs.) (11,430 kilograms (kg)). The facility pallet will accommodate up to four 7-packs, four 3-packs, two 3-packs of shielded containers, four 4-packs of drums, four SWBs (in two stacks of two units), two TDOPs, or one SLB2. Loads are secured to the facility pallet during transport to the emplacement area. Facility pallets are shown in Figure A2-3. Fork pockets in the side of the pallet allow the facility pallet to be lifted and transferred by forklift to prevent direct contact between TRU mixed waste containers and forklift tines. This arrangement reduces the potential for puncture accidents. WIPP facility operational documents define the operational load of the facility pallet to ensure that the rated load of a facility pallet is not exceeded.

Backfill

Magnesium oxide (**MgO**) will be used as a backfill in order to provide chemical control over the solubility of radionuclides in order to comply with the requirements of 40 CFR §191.13. The MgO backfill will be purchased prepackaged in the proper containers for emplacement in the underground. Purchasing prepackaged backfill eliminates handling and placement problems associated with bulk materials, such as dust creation. In addition, prepackaged materials will be easier to emplace, thus reducing potential worker exposure to radiation. Should a backfill container be breached, MgO is benign and cleanup is simple. No hazardous waste would result from a spill of backfill.

The MgO backfill will be managed in accordance with Specification D-0101 (MgO Backfill Specification) and WP05-WH1025 (CH Waste Downloading and Emplacement). These documents are kept on file at the WIPP facility by the Permittees.

Backfill will be handled in accordance with standard operating procedures. Typical emplacement configurations are shown in Figures A2-5 and A2-5a. Some emplacement configurations may include the use of MgO emplacement racks, as shown in Figure A2-5a.

Quality control will be provided within standard operating procedures to record that the correct number of sacks are placed and that the condition of the sacks is acceptable.

Backfill placed in this manner is protected until exposed when sacks are broken during creep closure of the room and compaction of the backfill and waste. Backfill in sacks utilizes existing techniques and equipment and eliminates operational problems such as dust creation and introducing additional equipment and operations into waste handling areas. There are no mine operational considerations (e.g. ventilation flow and control) when backfill is placed in this manner.

The Waste Shaft Conveyance

The hoist systems in the shafts and all shaft furnishings are designed to resist the dynamic forces of the hoisting system and to withstand a design-basis earthquake of 0.1 g. Appendix D2 of the WIPP RCRA Part B Permit Application (DOE, 1997) provided engineering design-basis earthquake report which provides the basis for seismic design of WIPP facility structures. The waste hoist is equipped with a control system that will detect malfunctions or abnormal

operations of the hoist system (such as overtravel, overspeed, power loss, circuitry failure, or starting in a wrong direction) and will trigger an alarm that automatically shuts down the hoist.

The waste hoist moves the Waste Shaft Conveyance and is a multirope, friction-type hoist. A counterweight is used to balance the waste shaft conveyance. The waste shaft conveyance (outside dimensions) is 30 ft (9 m) high by 10 ft (3 m) wide by 15 ft (4.5 m) deep and can carry a payload of 45 tons (40,824 kg). During loading and unloading operations, it is steadied by fixed guides. The hoist's maximum rope speed is 500 ft (152.4 m) per min.

The Waste Shaft hoist system has two sets of brakes, with two units per set, plus a motor that is normally used to stop the hoist. The brakes are designed so that either set, acting alone, can stop a fully loaded conveyance under all emergency conditions.

The Underground Waste Transporter

The underground waste transporter is a commercially available diesel-powered tractor. The trailer was designed specifically for the WIPP for transporting facility pallets from the waste shaft conveyance to the Underground HWDU in use. This transporter is shown in Figure A2-6.

Underground Forklifts

CH TRU mixed waste containers loaded on slipsheets will be removed from the facility pallets using forklifts with a push-pull attachment (Figure A2-7) attached to the forklift-truck front carriage. The push-pull attachment grips the edge of the slipsheet (on which the waste containers sit) to pull the containers onto the platen. After the forklift moves the waste containers to the emplacement location, the push-pull attachment pushes the containers into position. The use of the push-pull attachment prevents direct contact between waste containers and forklift tines. SWBs and TDOPs may also be removed from the facility pallet by using forklifts equipped with special adapters for these containers. These special adapters will prevent direct contact between SWBs or TDOPs and forklift tines. In addition, the low clearance forklift that is used to emplace MgO may be used to emplace waste if necessary.

A forklift will be used to offload the SLB2 from the underground transporter and emplace the waste container in the waste stack.

A2-2a(2) Shafts

The WIPP facility uses four shafts: the Waste Shaft, the Salt Handling Shaft, the Air Intake Shaft, and the Exhaust Shaft. These shafts are vertical openings that extend from the surface to the repository level.

The Waste Shaft is located beneath the WHB and is 19 to 20 ft (5.8 to 6.1 m) in diameter. The Salt Handling Shaft, located north of the Waste Shaft beneath the salt handling headframe, is 10 to 12 ft (3 to 3.6 m) in diameter. Salt mined from the repository horizon is removed through the Salt Handling Shaft. The Salt Handling Shaft is the main personnel and materials hoist and also serves as a secondary-supply air duct for the underground areas. The Air Intake Shaft, northwest of the WHB, varies in diameter from 16 ft 7 in. (4.51 m) to 20 ft 3 in. (6.19 m) and is the primary source of fresh air underground. The Exhaust Shaft, east of the WHB, is 14 to 15 ft (4.3 to 4.6 m) in diameter and serves as the exhaust duct for the underground air.

Openings excavated in salt experience closure because of salt creep (or time-dependent deformation at constant load). The closure affects the design of all of the openings discussed in this section. Underground excavation dimensions, therefore, are nominal, because they change with time. The unlined portions of the shafts have larger diameters than the lined portions, which allows for closure caused by salt creep. Each shaft includes a shaft collar, a shaft lining, and a shaft key section. The Final Design Validation Report in Appendix D1 of the WIPP RCRA Part B Permit Application (DOE, 1997) discusses the shafts and shaft components in greater detail.

The reinforced-concrete shaft collars extend from the surface to the top of the underlying consolidated sediments. Each collar serves to retain adjacent unconsolidated sands and soils and to prevent surface runoff from entering the shafts. The shaft linings extend from the base of the collar to the top of the salt beds approximately 850 ft (259 m) below the surface. Grout injected behind the shaft lining retards water seeping into the shafts from water-bearing formations, and the liner is designed to withstand the natural water pressure associated with these formations. The shaft liners are concrete, except in the Salt Handling Shaft, where a steel shaft liner has been grouted in place.

The shaft key is a circular reinforced concrete section emplaced in each shaft below the liner in the base of the Rustler and extending about 50 ft (15 m) into the Salado. The key functions to resist lateral pressures and assures that the liner will not separate from the host rocks or fail under tension. This design feature also aids in preventing the shaft from becoming a route for groundwater flow into the underground facility.

On the inside surface of each shaft, excluding the Salt Handling Shaft, there are three water-collection rings: one just below the Magenta, one just below the Culebra, and one at the lowermost part of the key section. These collection rings will collect water that may seep into the shaft through the liner. The Salt Handling Shaft has a single water collection ring in the lower part of the key section. Water collection rings are drained by tubes to the base of the shafts where the water is accumulated.

WIPP shafts and other underground facilities are, for all practical purposes, dry. Minor quantities of water (which accumulate in some shaft sumps) are insufficient to affect the waste disposal area. This water is collected, brought to the surface, and disposed of in accordance with current standards and regulations.

The Waste Shaft is protected from precipitation by the roof of the waste shaft conveyance headframe tower. The Exhaust Shaft is configured at the top with a 14 ft- (4.3 m-) diameter duct that diverts air into the exhaust filtration system or to the atmosphere, as appropriate. The Salt Handling and Air Intake Shaft collars are open except for the headframes. Rainfall into the shafts is evaporated by ventilation air.

The waste hoist system in the Waste Shaft and all Waste Shaft furnishings are designed to resist the dynamic forces of the hoisting system, which are greater than the seismic forces on the underground facilities. In addition the Waste Shaft conveyance headframe is designed to withstand the design-basis earthquake (**DBE**). Maximum operating speed of the hoist is 500 ft (152.4 m) per minute. During loading and unloading operations, the waste hoist is steadied by fixed guides. The waste hoist is equipped with a control system that will detect malfunctions or abnormal operations of the hoist system, such as overtravel, overspeed, power loss, or circuitry failure. The control response is to annunciate the condition and shut the hoist down. Operator response is required to recover from the automatic shutdown. Waste hoist operation is

continuously monitored by the CMS. A battery powered FM transmitter/receiver allows communication between the hoist conveyance and the hoist house.

The waste hoist has two pairs of brake calipers acting on independent brake paths. The hoist motor is normally used for braking action of the hoist. The brakes are used to hold the hoist in position during normal operations and to stop the hoist under emergency conditions. Each pair of brake calipers is capable of holding the hoist in position during normal operating conditions and stopping the hoist under emergency conditions. In the event of power failure, the brakes will set automatically.

The waste hoist is protected by a fixed automatic fire suppression system. Portable fire extinguishers are also provided on the hoist floor and in equipment areas.

A2-2a(3) Subsurface Structures

The subsurface structures in the repository, located at 2,150 ft (655 m) below the surface, include the HWDUs, the northern experimental areas, and the support areas. Appendix D3 of the WIPP RCRA Part B Permit Application (DOE, 1997) provided details of the underground layout. Figure A2-8 shows the proposed waste emplacement configuration for the HWDUs.

The status of important underground equipment, including fixed fire-protection systems, the ventilation system, and contamination detection systems, will be monitored by a central monitoring system, located in the Support Building adjacent to the WHB. Backup power will be provided as discussed below. The subsurface support areas are constructed and maintained to conform to Federal mine safety codes.

Underground Hazardous Waste Disposal Units (HWDUs)

During the terms of this and the preceding Permit, the volume of CH TRU mixed waste emplaced in the repository will not exceed 5,244,900 $ft^3$ (148,500 $m^3$) and the volume of RH TRU mixed waste shall not exceed 93,050 $ft^3$ (2,635 $m^3$). CH TRU mixed waste will be disposed of in Underground HWDUs identified as Panels 1 through 8. RH TRU mixed waste may be disposed of in Panels 4 through 8.

Main entries and cross cuts in the repository provide access and ventilation to the HWDUs. The main entries link the shaft pillar/service area with the TRU mixed waste management area and are separated by pillars. Each of the Underground HWDUs labeled Panels 1 through 8 will have seven rooms. The locations of these HWDUs are shown in Figure A2-1. The rooms will have nominal dimensions of 13 ft (4.0 m) high by 33 ft (10 m) wide by 300 ft (91 m) long and will be supported by 100 ft- (30 m-) wide pillars.

As currently planned, future Permits may allow disposal of TRU mixed waste containers in two additional panels, identified as Panels 9 and 10. Disposal of TRU mixed waste in Panels 9 and 10 is prohibited under this Permit. If waste volumes disposed of in the eight panels fail to reach the stated design capacity, the Permittees may request a Permit to allow disposal of TRU mixed waste in the four main entries and crosscuts adjacent to the waste panels (referred to as the disposal area access drifts). These areas are labeled Panels 9 and 10 in Figure A2-1. A permit modification or future permit would be submitted describing the condition of those drifts and the controls exercised for personnel safety and environmental protection while disposing of waste in these areas. These areas have the following nominal dimensions:

The E-140 waste transport route south of the Waste Shaft Station is mined to be 25 ft wide nominally and its height ranges from about 14 ft to 20 ft.

The W-30 waste transport route south of S-700 is mined to be 20 ft wide nominally and its height will be mined to at least 14 ft.

All other drifts that are part of the waste transport route will be at least 20 ft wide and 14 ft high to accommodate waste transport equipment.

Other drifts (i.e. mains and cross-cuts) vary in width and height according to their function typically ranging from 14 ft to 20 ft wide and 12 ft to 20 ft high.

The layout of these excavations is shown on Figure A2-1.

Underground Facilities Ventilation System

The underground facilities ventilation system will provide a safe and suitable environment for underground operations during normal WIPP facility operations. The underground system is designed to provide control of potential airborne contaminants in the event of an accidental release or an underground fire.

The main underground ventilation system is divided into four separate flows (Figure A2-9): one flow serving the mining areas, one serving the northern experimental areas, one serving the disposal areas, and one serving the Waste Shaft and station area. The four main airflows are recombined near the bottom of the Exhaust Shaft, which serves as a common exhaust route from the underground level to the surface.

Underground Ventilation System Description

The underground ventilation system consists of six centrifugal exhaust fans, two identical HEPA-filter assemblies arranged in parallel, isolation dampers, a filter bypass arrangement, and associated ductwork. The six fans, connected by the ductwork to the underground exhaust shaft so that they can independently draw air through the Exhaust Shaft, are divided into two groups. One group consists of three main exhaust fans, two of which are utilized to provide the nominal air flow of 425,000 standard $ft^3$ per minute (scfm) throughout the WIPP facility underground during normal operation. One main fan may be operated in the alternate mode to provide 260,000 scfm underground ventilation flow. These fans are located near the Exhaust Shaft. The second group consists of the remaining three filtration fans, and each can provide 60,000 scfm of air flow. These fans, located at the Exhaust Filter Building, can be operated in the filtration mode, where exhaust is diverted through HEPA filters, or in the reduced or minimum ventilation mode, where air is not drawn through the HEPA filters.

The underground mine ventilation is designed to supply sufficient quantities of air to all areas of the repository. During normal operating mode (simultaneous mining and waste emplacement operations), approximately 140,000 actual $ft^3$ (3,962 $m^3$) per min can be supplied to the panel area. This quantity is necessary in order to support the level of activity and the pieces of diesel equipment that are expected to be in operation.

At any given time during waste emplacement activities, there may be significant activities in multiple rooms in a panel. For example, one room may be receiving CH TRU mixed waste

containers, another room may be receiving RH TRU mixed waste canisters, and the drilling of RH TRU mixed waste emplacement boreholes may be occurring in another room. The remaining rooms in a panel will either be completely filled with waste; be idle, awaiting waste handling operations; or being prepared for waste receipt. A minimum ventilation rate of 35,000 $ft^3$ (990 $m^3$) per minute will be maintained in each active room when waste disposal is taking place and workers are present in the room. This quantity of air is required to support the numbers and types of diesel equipment that are expected to be in operation in the area, to support the underground personnel working in that area, and to exceed a minimum air velocity of 60 ft (18 m) per minute. The remainder of the air is needed in order to account for air leakage through inactive rooms.

Air will be routed into a panel from the intake side. Air is routed through the individual rooms within a panel using underground bulkheads and air regulators. Bulkheads are constructed by erecting framing of rectangular steel tubing and screwing galvanized sheet metal to the framing. Bulkhead members use telescoping extensions that are attached to framing and the salt which adjust to creep. Flexible flashing attached to the bulkhead on one side and the salt on the other completes the seal of the ventilation. Where controlled airflow is required, a louver-style damper on a slide-gate (sliding panel) regulator is installed on the bulkhead. Personnel access is available through most bulkheads, and vehicular access is possible through selected bulkheads. Vehicle roll-up doors in the panel areas are not equipped with warning bells or strobe lights since these doors are to be used for limited periodic maintenance activities in the return air path. Flow is also controlled using brattice cloth barricades. These consist of chain link fence that is bolted to the salt and covered with brattice cloth; and are used in instances where the only flow control requirement is to block the air. A brattice cloth air barricade is shown in Figure A2-11. Ventilation will be maintained only in all active rooms within a panel until waste emplacement activities are completed and the panel-closure system is installed. The air will be routed simultaneously through all the active rooms within the panel. The filled rooms will be isolated from the ventilation system, while the active rooms that are actively being filled will receive a minimum of 35,000 SCFM of air when workers are present to assure worker safety. After all rooms within a panel are filled, the panel will be closed using a closure system described Permit Attachment G and Permit Attachment G1.

Once a disposal room is filled and is no longer needed for emplacement activities, it will be barricaded against entry and isolated from the mine ventilation system by removing the air regulator bulkhead and constructing chain link/brattice cloth barricades and, if necessary, bulkheads at each end. A typical bulkhead is shown in Figure A2-11a. There is no requirement for air for these rooms since personnel and/or equipment will not be in these areas.

The ventilation path for the waste disposal side is separated from the mining side by means of air locks, bulkheads, and salt pillars. A pressure differential is maintained between the mining side and the waste disposal side to ensure that any leakage is towards the disposal side. The pressure differential is produced by the surface fans in conjunction with the underground air regulators.

<u>Underground Ventilation Modes of Operation</u>

The underground ventilation system is designed to perform under two types of operation: normal (the HEPA exhaust filtration system is bypassed), and filtered (the exhaust is filtered through the HEPA filtration system, if radioactive contaminants are detected or suspected.

Overall, there are six possible modes of exhaust fan operation:

- 2 main fans in operation
- 1 main fan in operation
- 1 filtration fan in filtered operation
- 1 filtration fan in unfiltered operation
- 2 filtration fans in unfiltered operation
- 1 main and 1 filtration fan (unfiltered) in operation

Under some circumstances (such as power outages and maintenance activities, etc.), all mine ventilation may be discontinued for short periods of time.

In the normal mode, two main surface exhaust fans, located near the Exhaust Shaft, will provide continuous ventilation of the underground areas. All underground flows join at the bottom of the Exhaust Shaft before discharge to the atmosphere.

Outside air will be supplied to the mining areas and the waste disposal areas through the Air Intake Shaft, the Salt Handling Shaft, and access entries. A small quantity of outside air will flow down the Waste Shaft to ventilate the Waste Shaft station. The ventilation system is designed to operate with the Air Intake Shaft as the primary source of fresh air. Under these circumstances, sufficient air will be available to simultaneously conduct all underground operations (e.g., waste handling, mining, experimentation, and support). Ventilation may be supplied by operating fans in the configurations listed in the above description of the ventilation modes.

If the nominal flow of 425,000 cfm (12,028 $m^3$/min) is not available (i.e., only one of the main ventilation fans is available) underground operations may proceed, but the number of activities that can be performed in parallel may be limited depending on the quantity of air available. Ventilation may be supplied by operating one or two of the filtration exhaust fans. To accomplish this, the isolation dampers will be opened, which will permit air to flow from the main exhaust duct to the filter outlet plenum. The filtration fans may also be operated to bypass the HEPA plenum. The isolation dampers of the filtration exhaust fan(s) to be employed will be opened, and the selected fan(s) will be switched on. In this mode, underground operations will be limited, because filtration exhaust fans cannot provide sufficient airflow to support the use of diesel equipment.

In the filtration mode, the exhaust air will pass through two identical filter assemblies, with only one of the three Exhaust Filter Building filtration fans operating (all other fans are stopped). This system provides a means for removing the airborne particulates that may contain radioactive and hazardous waste contaminants in the reduced exhaust flow before they are discharged through the exhaust stack to the atmosphere. The filtration mode is activated manually or automatically if the radiation monitoring system detects abnormally high concentrations of airborne radioactive particulates (an alarm is received from the continuous air monitor in the exhaust drift of the active waste panel) or a waste handling incident with the potential for a waste container breach is observed. The filtration mode is not initiated by the release of gases such as VOCs.

If utility power fails, the exhaust filter system goes into the fail-safe position, and the system high-efficiency particulate-air filter dampers are placed into filtration position. When power is restored by the diesel generators, a decision is made whether to remain in filtration mode and energize a filtration fan or to realign the dampers into the minimum exhaust mode. Without any

indication of a radiological release, the decision is usually the latter. TRU mixed waste handling and related operations cease upon loss of utility power and are not resumed until normal utility power is returned. As specified in Part 2, all waste handling equipment will "fail safe," meaning that it will retain its load during a power outage.

Underground Ventilation Normal Mode Redundancy

The underground ventilation system has been provided redundancy in normal ventilation mode by the addition of a third main fan. Ductwork leading to that new fan ties into the existing main exhaust duct.

Electrical System

The WIPP facility uses electrical power (utility power) supplied by the regional electric utility company. If there is a loss of utility power, TRU mixed waste handling and related operations will cease.

Backup, alternating current power will be provided on site by two 1,100-kilowatt diesel generators. These units provide 480-volt power with a high degree of reliability. Each of the diesel generators can carry predetermined equipment loads while maintaining additional power reserves. Predetermined loads include lighting and ventilation for underground facilities, lighting and ventilation for the TRU mixed waste handling areas, and the Air Intake Shaft hoist. The diesel generator can be brought on line within 30 minutes either manually or from the control panel in the Central Monitoring Room (CMR).

Uninterruptible power supply (**UPS**) units are also on line providing power to predetermined monitoring systems. These systems ensure that the power to the radiation detection system for airborne contamination, the local processing units, the computer room, and the CMR will always be available, even during the interval between the loss of off-site power and initiation of backup diesel generator power.

A2-2a(4) RH TRU Mixed Waste Handling Equipment

The following are the major pieces of equipment used to manage RH TRU mixed waste in the geologic repository. A summary of equipment capacities is included in Table A2-3.

The Facility Cask Transfer Car

The Facility Cask Transfer Car is a self-propelled rail car (Figure A2-14) that operates between the Facility Cask Loading Room and the geologic repository. After the Facility Cask is loaded, the Facility Cask Transfer Car moves onto the waste shaft conveyance and is then transported underground. At the underground waste shaft station, the Facility Cask Transfer Car proceeds away from the waste shaft conveyance to provide forklift access to the Facility Cask.

Horizontal Emplacement and Retrieval Equipment or Functionally Equivalent Equipment

The Horizontal Emplacement and Retrieval Equipment (**HERE**) or functionally equivalent equipment (Figure A2-15) emplaces canisters into a borehole in a room wall of an Underground HWDU. Once the canisters have been emplaced, the HERE then fills the borehole opening with a shield plug.

## A2-2b Geologic Repository Process Description

Prior to receipt of TRU mixed waste at the WIPP facility, waste operators will be thoroughly trained in the safe use of TRU mixed waste handling and transport equipment. The training will include both classroom training and on-the-job training.

### RH TRU Mixed Waste Emplacement

The Facility Cask Transfer Car is loaded onto the waste shaft conveyance and is lowered to the waste shaft station underground. At the waste shaft station underground, the Facility Cask is moved from the waste shaft conveyance by the Facility Cask Transfer Car (Figure A2-16). A forklift is used to remove the Facility Cask from the Facility Cask Transfer Car and to transport the Facility Cask to the Underground HWDU. There, the Facility Cask is placed on the HERE (Figure A2-17). The HERE is used to emplace the RH TRU mixed waste canister into the borehole. The borehole will be visually inspected for obstructions prior to aligning the HERE and emplacement of the RH TRU mixed waste canister. The Facility Cask is moved forward to mate with the shield collar, and the transfer carriage is advanced to mate with the rear Facility Cask shield valve. The shield valves on the Facility Cask are opened, and the transfer mechanism advances to push the canister into the borehole. After retracting the transfer mechanism into the Facility Cask, the forward shield valve is closed, and the transfer mechanism is further retracted into its housing. The transfer mechanism is moved to the rear, and the shield plug carriage containing a shield plug is placed on the emplacement machine. The transfer mechanism is used to push the shield plug into the Facility Cask. The front shield valve is opened, and the shield plug is pushed into the borehole (Figure A2-18). The transfer mechanism is retracted, the shield valves close on the Facility Cask, and the Facility Cask is removed from the HERE.

A shield plug is a concrete filled cylindrical steel shell (Figure A2-21) approximately 61 in. long and 29 in. in diameter, made of concrete shielding material inside a 0.24 in. thick steel shell with a removable pintle at one end. Each shield plug has integral forklift pockets and weighs approximately 3,750 lbs. The shield plug is inserted with the pintle end closest to the HERE to provide the necessary shielding , limiting the borehole radiation dose rate at 30 cm to less than 10 mrem per hour for a canister surface dose rate of 100 rem/hr . Additional shielding is provided at the direction of the Radiological Control Technician based on dose rate surveys following shield plug emplacement. This additional shielding is provided by the manual emplacement of one or more shield plug supplemental shielding plates and a retainer (Figures A2-19 and A2-20).

The amount of RH TRU mixed waste disposal in each panel is limited based on thermal and geomechanical considerations and shall not exceed 10 kilowatts per acre as described in Permit Attachment A2-1. RH TRU mixed waste emplacement boreholes shall be drilled in the ribs of the panels at a nominal spacing of 8 ft (2.4 m) center-to-center, horizontally.

Figures A1-26 and A1-27 are flow diagrams of the RH TRU mixed waste handling process for the RH-TRU 72-B and CNS 10-160B casks, respectively.

### CH TRU Mixed Waste Emplacement

CH TRU mixed waste containers and shielded containers will arrive by tractor-trailer at the WIPP facility in sealed shipping containers. Prior to unloading the packages from the trailer, they will undergo security and radiological checks and shipping documentation reviews. The

trailers carrying the shipping containers will be stored temporarily at the Parking Area Container Storage Unit (Parking Area Unit). A forklift will remove the Contact Handled Packages from the transport trailers and a forklift or Yard Transfer Vehicle will transport them into the Waste Handling Building Container Storage Unit for unloading of the waste containers. Each TRUPACT-II may hold up to two 7-packs, two 4-packs, two 3-packs, two SWBs, or one TDOP. Each HalfPACT may hold up to seven 55-gal (208 L) drums, one SWB, one three-pack of shielded containers or four 85-gal (322 L) drums. Each TRUPACT-III will hold one SLB2. An overhead bridge crane or Facility Transfer Vehicle with transfer table will be used to remove the waste containers from the Contact Handled Packaging and place them on a facility or containment pallet. Each facility pallet has two recessed pockets to accommodate two sets of 7-packs, two sets of 3-packs, two sets of 4-packs, two SWBs stacked two-high, two TDOPs, or one SLB2. Each stack of waste containers will be secured prior to transport underground (see Figure A2-3). A forklift or the facility transfer vehicle will transport the loaded facility pallet to the conveyance loading room adjacent to the Waste Shaft. The facility transfer vehicle will be driven onto the waste shaft conveyance deck, where the loaded facility pallet will be transferred to the waste shaft conveyance, and the facility transfer vehicle will be backed off. Containers of CH TRU mixed waste (55-gal (208 L) drums, SWBs, 85-gal (322 L) drums, 100-gal (379 L) drums, and TDOPs) or shielded containers can be handled individually, if needed, using the forklift and lifting attachments (i.e., drum handlers, parrot beaks).

The waste shaft conveyance will lower the loaded facility pallet to the underground. At the waste shaft station, the CH TRU underground transporter will back up to the waste shaft conveyance, and the facility pallet will be transferred from the waste shaft conveyance onto the transporter (see Figure A2-6). The transporter will then move the facility pallet to the appropriate Underground HWDU for emplacement. The underground waste transporter is equipped with a fire suppression system, rupture-resistant diesel fuel tanks, and reinforced fuel lines to minimize the potential for a fire involving the fuel system.

A forklift in the HWDU near the waste stack will be used to remove the waste containers from the facility pallets and to place them in the waste stack using a push-pull attachment or, in the case of an SLB2, the SLB2 will be lifted from the facility pallet and placed directly on the floor of the emplacement room. The waste will be emplaced room by room in Panels 1 through 8. Each panel will be closed off when filled. If a waste container is damaged during the Disposal Phase, it will be immediately overpacked or repaired. CH TRU mixed waste containers will be continuously vented. The filter vents will allow aspiration, preventing internal pressurization of the container and minimizing the buildup of flammable gas concentrations.

Once a waste panel is mined and any initial ground control established, flow regulators will be constructed to assure adequate control over ventilation during waste emplacement activities. The first room to be filled with waste will be Room 7, which is the one that is farthest from the main access ways. A ventilation control point will be established for Room 7 just outside the exhaust side of Room 6. This ventilation control point will consist of a bulkhead with a ventilation regulator. When RH TRU mixed waste canister emplacement is completed in a room, CH TRU mixed waste emplacement can begin in that room. Stacking of CH waste will begin at the ventilation control point and proceed down the access drift, through the room and up the intake access drift until the entrance of Room 6 is reached. At that point, a brattice cloth and chain link barricade and, if necessary, bulkheads will be emplaced. This process will be repeated for Room 6, and so on until Room 1 is filled. At that point, the panel closure system will be constructed.

The emplacement of CH TRU mixed waste into the HWDUs will typically be in the order received and unloaded from the Contact Handled Packaging. There is no specification for the amount of space to be maintained between the waste containers themselves, or between the waste containers and the walls. Containers will be stacked in the best manner to provide stability for the stack (which is up to three containers high) and to make best use of available space. It is anticipated that the space between the wall and the container could be from 8 to 18 in. (20 to 46 cm). This space is a function of disposal room wall irregularities, container type, and sequence of emplacement. Bags of backfill will occupy some of this space. Space is required over the stacks of containers to assure adequate ventilation for waste handling operations. A minimum of 16 in. (41 cm) was specified in the Final Design Validation Report (Appendix D1, Chapter 12 of the WIPP RCRA Part B Permit Application (DOE, 1997)) to maintain air flow. Typically, the space above a stack of containers will be 36 to 48 in. (90 to 122 cm). However 18 in. (0.45 m) will contain backfill material consisting of bags of Magnesium Oxide (MgO). Figure A2-8 shows a typical container configuration, although this figure does not mix containers on any row. Such mixing, while inefficient, will be allowed to assure timely movement of waste into the underground. No aisle space will be maintained for personnel access to emplaced waste containers. No roof maintenance behind stacks of waste is planned.

The anticipated schedule for the filling of each of the Underground HWDUs known as Panels 1 through 8 is shown in Permit Attachment G, Table G-1. Panel closure in accordance with the Closure Plan in Permit Attachment G and Permit Attachment G1 is estimated to require an additional 150 days.

Figure A2-12 is a flow diagram of the CH TRU mixed waste handling process.

## A2-3 Waste Characterization

TRU mixed waste characterization is described in Permit Attachment C.

## A2-4 Treatment Effectiveness

TRU mixed waste treatment, as defined in 20.4.1.101 NMAC (incorporating 40 CFR §260.10), for which a permit is required, will not be performed at the WIPP facility.

## A2-5 Maintenance, Monitoring, and Inspection

### A2-5a Maintenance

#### A2-5a(1) Ground-Control Program

The ground-control program at the WIPP facility will ensure that any room in an HWDU in which waste will be placed will be sufficiently supported to assure compliance with the applicable portions of the Land Withdrawal Act (**LWA**), which requires a regular review of roof-support plans and practices by the Mine Safety and Health Administration (**MSHA**). Support is installed to the requirements of 30 CFR §57, Subpart B.

## A2-5b Monitoring

### A2-5b(1) Groundwater Monitoring

Groundwater monitoring for the WIPP Underground HWDUs will be conducted in accordance with Part 5 and Permit Attachment L of this permit.

### A2-5b(2) Geomechanical Monitoring

The geomechanical monitoring program at the WIPP facility is an integral part of the ground-control program (See Figure A2-13). HWDUs, drifts, and geomechanical test rooms will be monitored to provide confirmation of structural integrity. Geomechanical data on the performance of the repository shafts and excavated areas will be collected as part of the geotechnical field-monitoring program. The results of the geotechnical investigations will be reported annually. The report will describe monitoring programs and geomechanical data collected during the previous year.

#### A2-5b(2)(a) Description of the Geomechanical Monitoring System

The Geomechanical Monitoring System (**GMS**) provides in situ data to support the continuous assessment of the design for underground facilities. Specifically, the GMS provides for:

- Early detection of conditions that could affect operational safety
- Evaluation of disposal room closure that ensures adequate access
- Guidance for design modifications and remedial actions
- Data for interpreting the behavior of underground openings, in comparison with established design criteria

The instrumentation in Table A2-2 is available for use in support of the geomechanical program.

The minimum instrumentation for each of the eight panels will be one borehole extensometer installed in the roof at the center of each disposal room. The roof extensometers will monitor the dilation of the immediate salt roof beam and possible bed separations along clay seams. Additional instrumentation will be installed as conditions warrant.

Remote polling of the geomechanical instrumentation will be performed at least once every month. This frequency may be increased to accommodate any changes that may develop.

The results from the remotely read instrumentation will be evaluated after each scheduled polling. Documentation of the results will be provided annually in the Geotechnical Analysis Report.

Data from remotely read instrumentation will be maintained as part of a geotechnical instrumentation system. The instrumentation system provides for data maintenance, retrieval, and presentation. The Permittees will retrieve the data from the instrumentation system and verify data accuracy by confirming the measurements were taken in accordance with applicable instructions and equipment calibration is known. Next, the Permittees will review the data after

each polling to assess the performance of the instrument and of the excavation. Anomalous data will be investigated to determine the cause (instrumentation problem, error in recording, changing rock conditions). The Permittees will calculate various parameters such as the change between successive readings and deformation rates. This assessment will be reported to the Permittees' cognizant ground control engineer and operations personnel. The Permittees will investigate unexpected deformation to determine if remediation is needed.

The stability of an open panel excavation is generally determined by the rock deformation rate. The excavation may be unstable when there is a continuous increase in the deformation rate that cannot be controlled by the installed support system. The Permittees will evaluate the performance of the excavation. These evaluations assess the effectiveness of the roof support system and estimate the stand-up time of the excavation. If an open panel shows the trend is toward adverse (unstable) conditions, the results will be reported to determine if it is necessary to terminate waste disposal activities in the open panel. This report of the trend toward adverse conditions in an open HWDU will also be provided to the Secretary of the NMED within seven (7) calendar days of issuance of the report.

A2-5b(2)(b) System Experience

Much experience in the use of geomechanical instrumentation was gained as the result of performance monitoring of Panel 1, which began at the time of completion of the panel excavation in 1988. The monitoring system installed at that time involved simple measurements and observations (e.g., vertical and horizontal convergence rates, and visual inspections). Minimal maintenance of instrumentation is required, and the instrumentation is easily replaced if it malfunctions. Conditions throughout Panel 1 are well known. The monitoring program continues to provide data to compare the performance of Panel 1 with that established elsewhere in the underground. Panel 1 performance is characterized by the following:

The development of bed separations and lateral shifts at the interfaces of the salt and the clays underlying the anhydrites "a" and "b."

Room closures. A closure due only to the roof movement will be separated from the total closure.

The behavior of the pillars.

Fracture development in the roof and floor.

Distribution of load on the support system.

Roof conditions are assessed from observation boreholes and extensometer measurements. Measurements of room closure, rock displacements, and observations of fracture development in the immediate roof beam are made and used to evaluate the performance of a panel. A description of the Panel 1 monitoring program was presented to the members of the Geotechnical Experts Panel (in 1991) who concurred that it was adequate to determine deterioration within the rooms and that it will provide early warning of deteriorating conditions.

The assessment and evaluation of the condition of WIPP excavations is an interactive, continuous process using the data from the monitoring programs. Criteria for corrective action are continually reevaluated and reassessed based on total performance to date. Actions taken

are based on these analyses and planned utilization of the excavation. Because WIPP excavations are in a natural geologic medium, there is inherent variability from point to point. The principle adopted is to anticipate potential ground control requirements and implement them in a timely manner rather than to wait until a need arises.

### A2-5b(3) Volatile Organic Compound Monitoring

The volatile organic compound monitoring for the WIPP Underground HWDUs will be conducted in accordance with Part 4 and Permit Attachment N of this permit.

### A2-5c Inspection

The inspection of the WIPP Underground HWDUs will be conducted in accordance with Part 2 and Permit Attachment E of this permit.

### References

DOE, 1997. Resource Conservation and Recovery Act Part B Permit Application, Waste Isolation Pilot Plant (WIPP), Carlsbad, New Mexico, Revision 6.5, 1997.

DOE, 2009. WIPP Hazardous Waste Facility Permit Amended Renewal Application, Carlsbad, New Mexico, September 2009.

# TABLES

(This page intentionally blank)

**Table A2-1**
**CH TRU Mixed Waste Handling Equipment Capacities**

| **Capacities for Equipment** | |
|---|---|
| Facility Pallet | 25,000 lbs. |
| Facility Transfer Vehicle | 26,000 lbs. |
| Underground transporter | 28,000 lbs. |
| Underground forklift | 12,000 lbs. |
| **Maximum Gross Weights of Containers** | |
| Seven-pack of 55-gallon drums | 7,000 lbs. |
| Four-pack of 85-gallon drums | 4,500 lbs. |
| Three-pack of 100-gallon drums | 3,000 lbs. |
| Ten-drum overpack | 6,700 lbs. |
| Standard waste box | 4,000 lbs. |
| Standard large box 2 | 10,500 lbs. |
| Shielded container | 2,260 lbs. |
| Three-pack of shielded containers | 7,000 lbs. |
| **Maximum Net Empty Weights of Equipment** | |
| TRUPACT-II | 13,140 lbs. |
| HalfPACT | 10,500 lbs. |
| TRUPACT-III | 43,600 lbs. |
| Facility pallet | 4,120 lbs. |

**Table A2-2**
**Instrumentation Used in Support of the Geomechanical Monitoring System**

| Instrument Type | Features | Parameter Measured | Range |
|---|---|---|---|
| Borehole Extensometer | The extensometer provides for monitoring the deformation parallel to the borehole axis. Units suitable for up to 5 measurements anchors in addition to the reference head. Maximum borehole depths shall be 50 feet. | Cumulative Deformation | 0-2 inches |
| Borehole Television Camera | Closed circuit television may be used for monitoring areas otherwise inaccessible, such as boreholes or shafts. | Video Image | N/A |
| Convergence Points and Tape Extensometers | Mechanically anchored eyebolts to which a portable tape extensometer is attached. | Cumulative Deformation | 2-50 feet |
| Convergence Meters | Includes wire and sonic meters. Mounted on rigid plates anchored to the rock surface. | Cumulative Deformation | 2-50 feet |
| Inclinometers | Both vertical and horizontal inclinometers are used. Traversing type of system in which a probe is moved periodically through casing located in the borehole whose inclination is being measured. | Cumulative Deformation | 0-30 degrees |
| Rock Bolt Load Cells | Spool type units suitable for use with rock bolts. Tensile stress is inferred from strain gauges mounted on the surface of the spool. | Load | 0-300 kips |
| Earth Pressure Cells | Installed between concrete keys and rock. Preferred type is a hydraulic pressure plate connected to a vibrating wire transmitter. | Lithostatic Pressure | 0-1000 psi |
| Piezometer Pressure Transducers | Located in shafts and of robust design and construction. Periodic checks on operability required. | Fluid Pressure | 0-500 psi |
| Strain Gauges | Installed within the concrete shaft key. Suitably sealed for the environment. Two types used--surface mounted and embedded. | Cumulative Deformation | 0-3000 µin/in (embedded)<br>0-2500 µin/in (surface) |

**Table A2-3**
**RH TRU Mixed Waste Handling Equipment Capacities**

| **Capacities for Equipment** | |
|---|---|
| 41-Ton Forklift | 82,000 lbs |
| **Maximum Gross Weights of RH TRU Containers** | |
| RH TRU Facility Canister | 10,000 lbs |
| 55-Gallon Drum | 1,000 lbs |
| RH TRU Canister | 8,000 lbs |
| **Maximum Net Empty Weights of Equipment** | |
| Facility Cask | 67,700 lbs |

(This page intentionally blank)

# FIGURES

(This page intentionally blank)

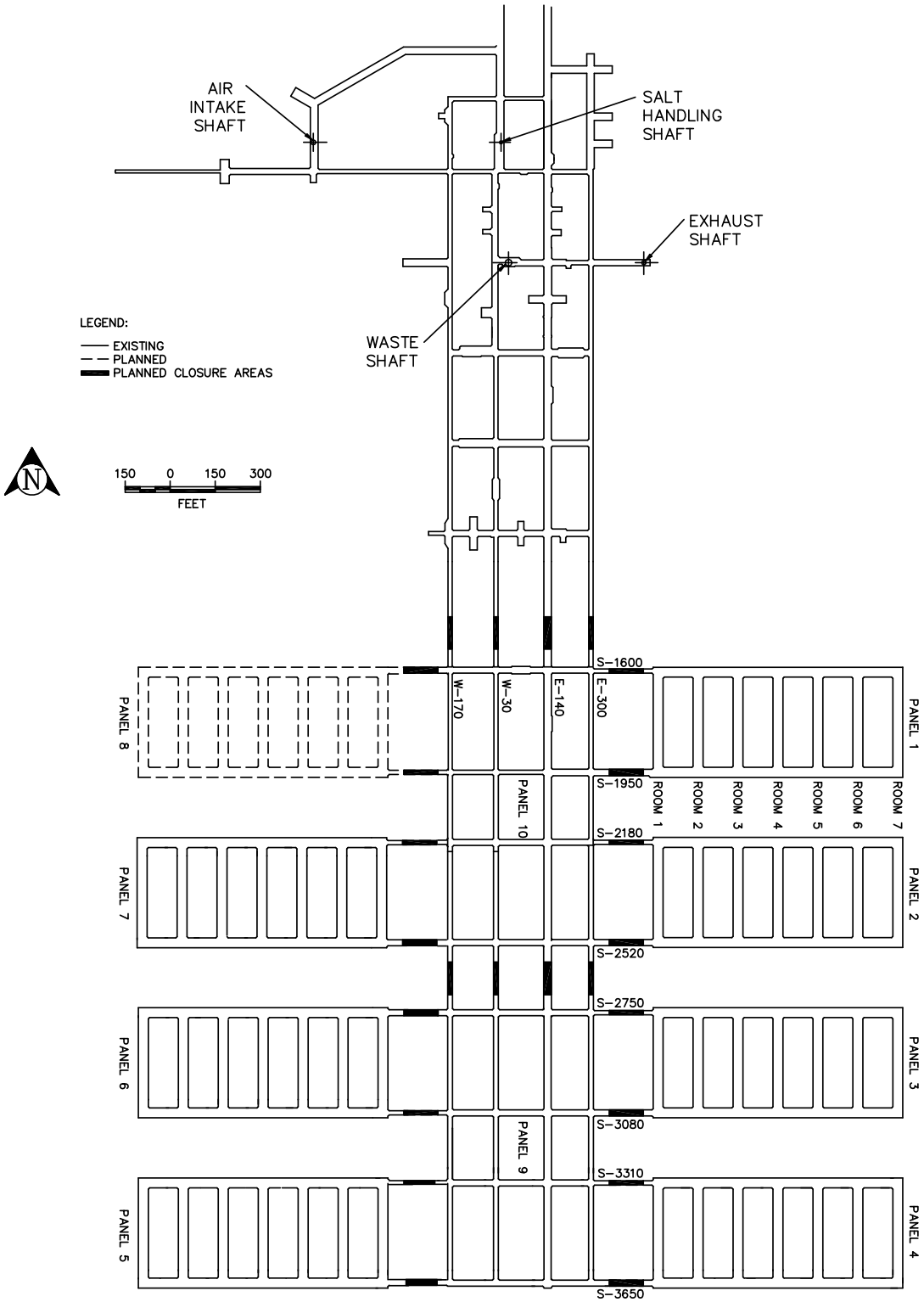


**Figure A2-1**
**Repository Horizon**

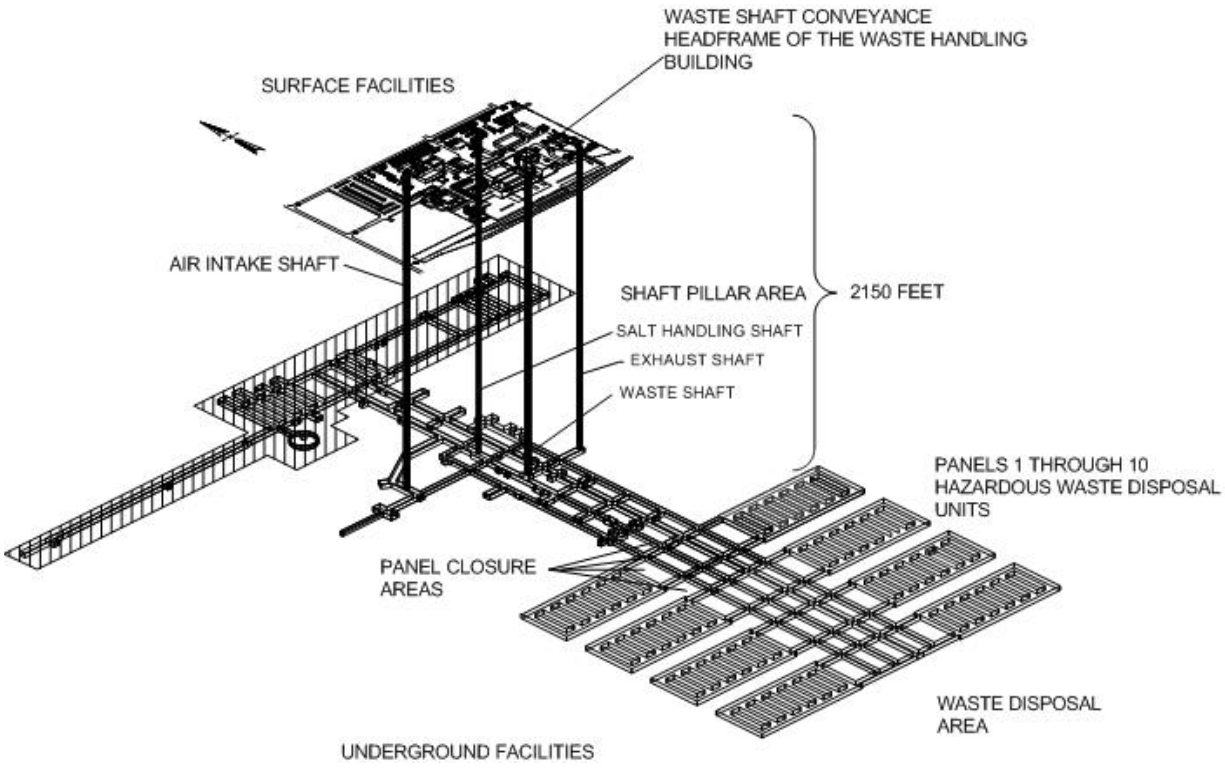


**Figure A2-2**
**Spatial View of the Miscellaneous Unit and Waste Handling Facility**

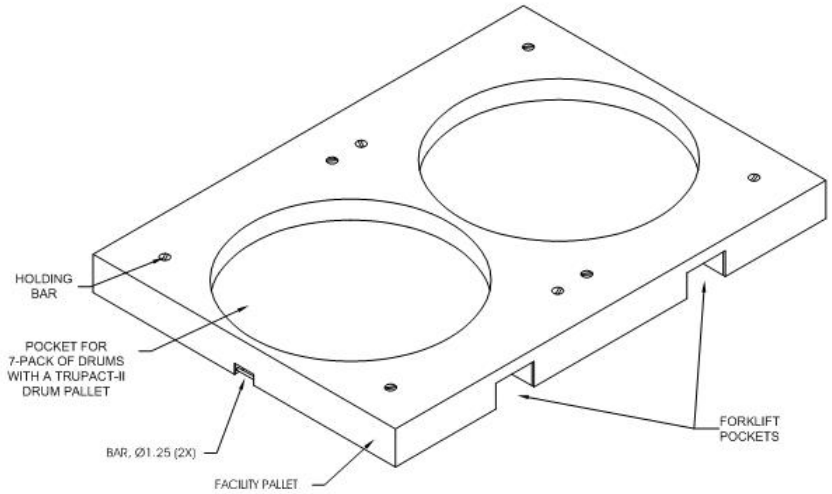


**Figure A2-3**
**Facility Pallet for Seven-Pack of Drums**

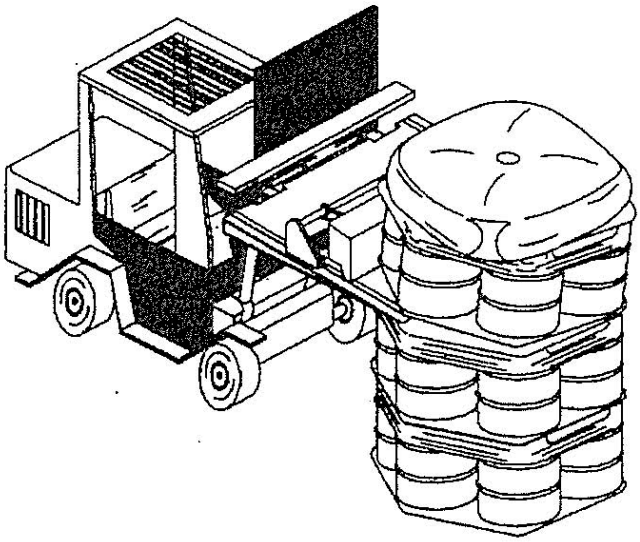

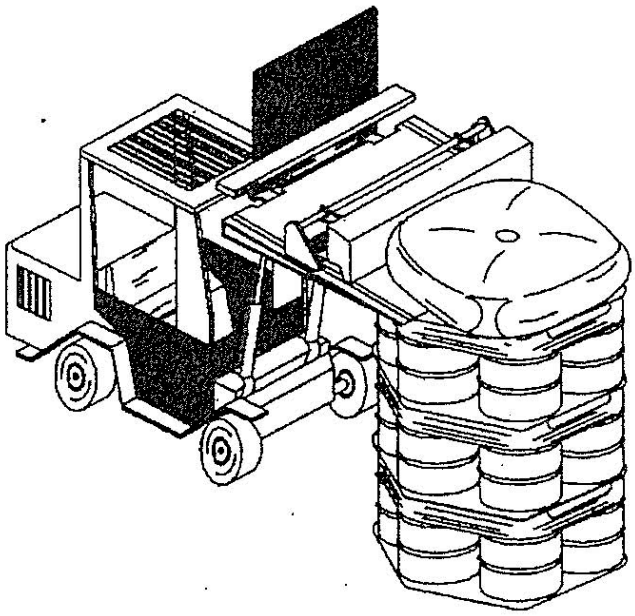

**Figure A2-5**
**Typical Backfill Sacks Emplaced on Drum Stacks**

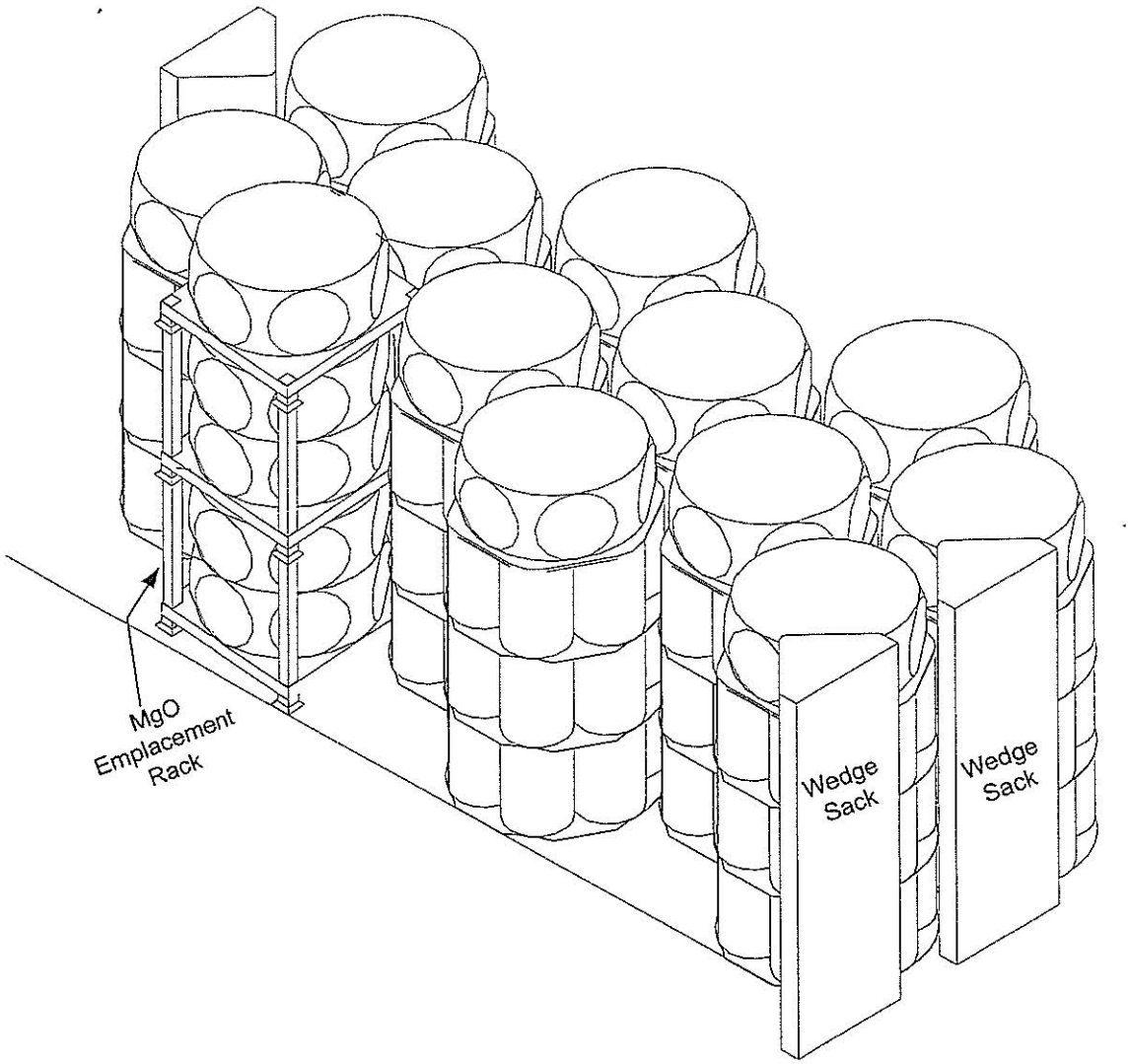


**Figure A2-5a**
**Potential MgO Emplacement Configurations**

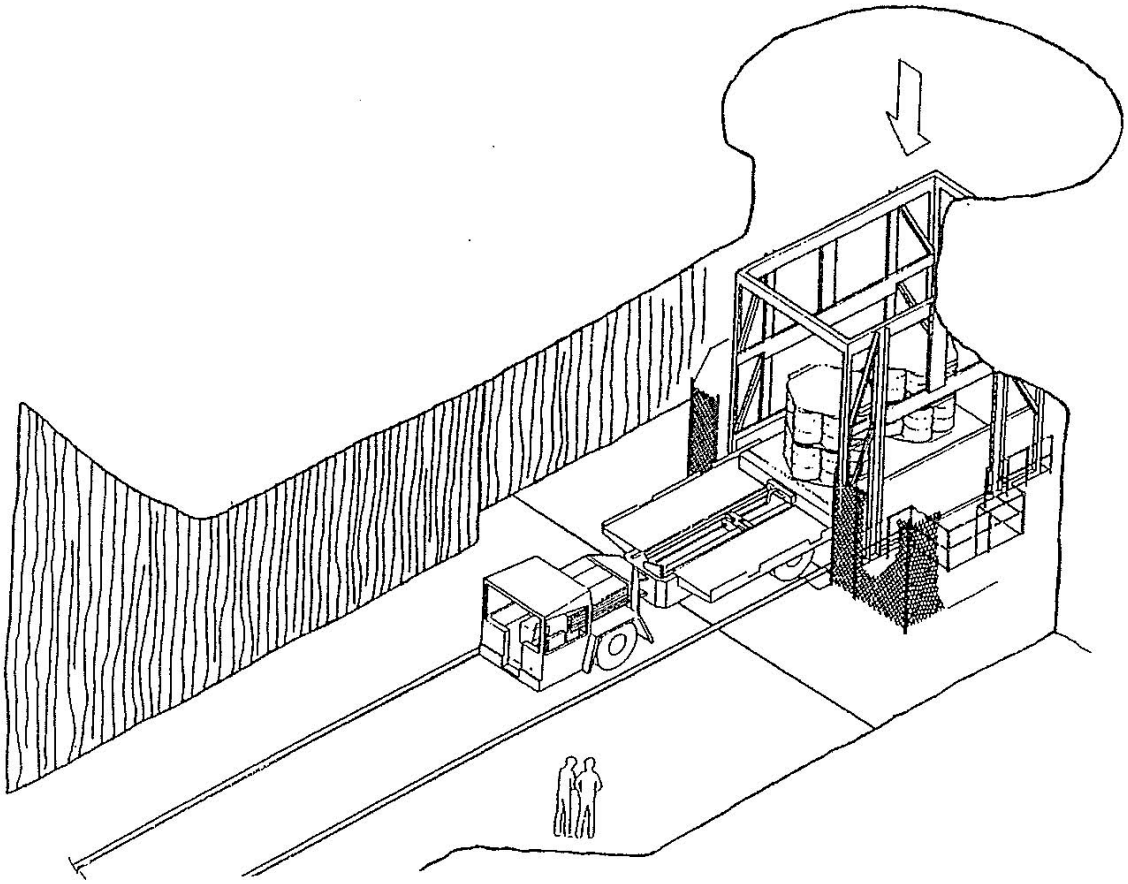

**Figure A2-6**
**Waste Transfer Cage to Transporter**

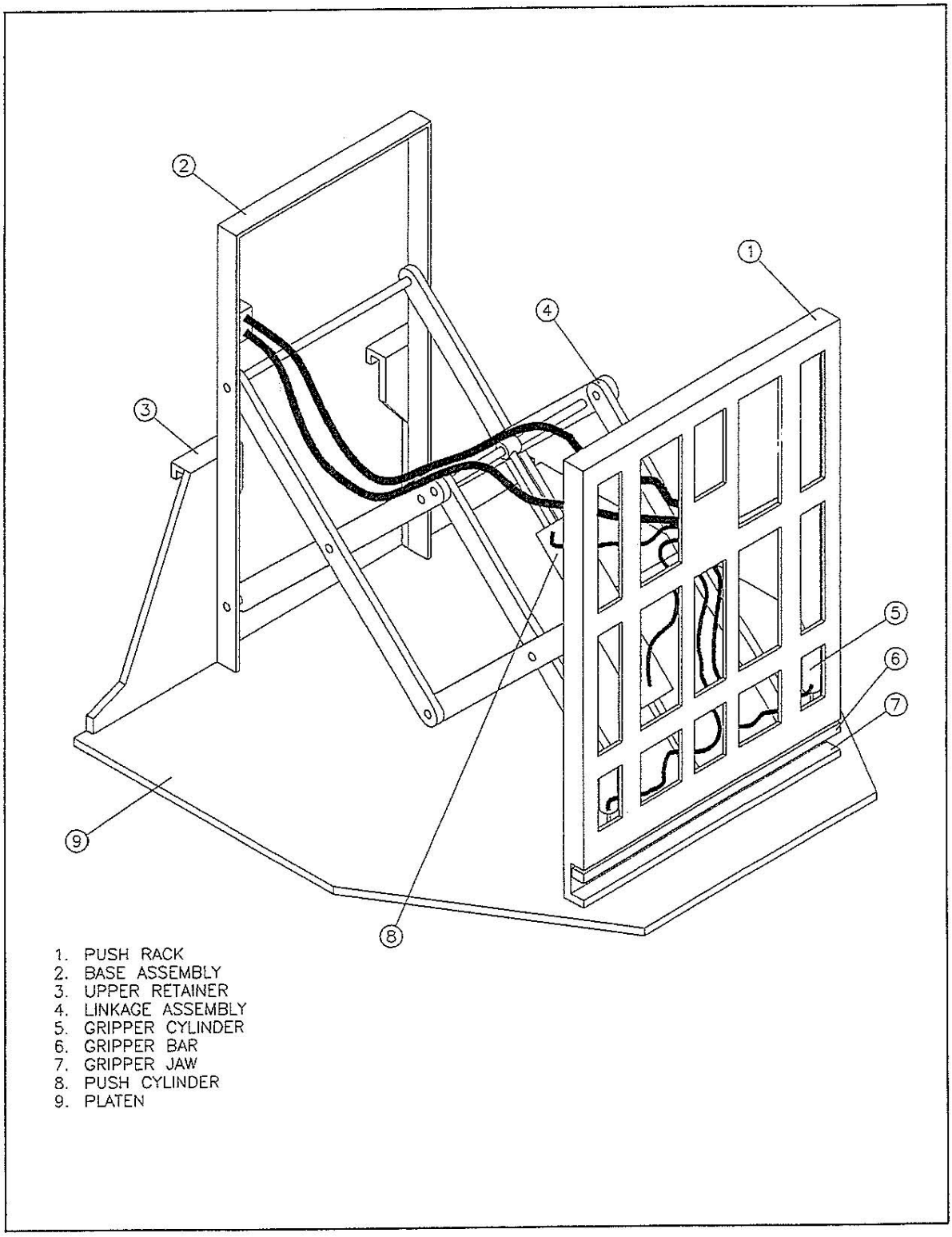


**Figure A2-7**
**Push-Pull Attachment to Forklift to Allow Handling of Waste Containers**

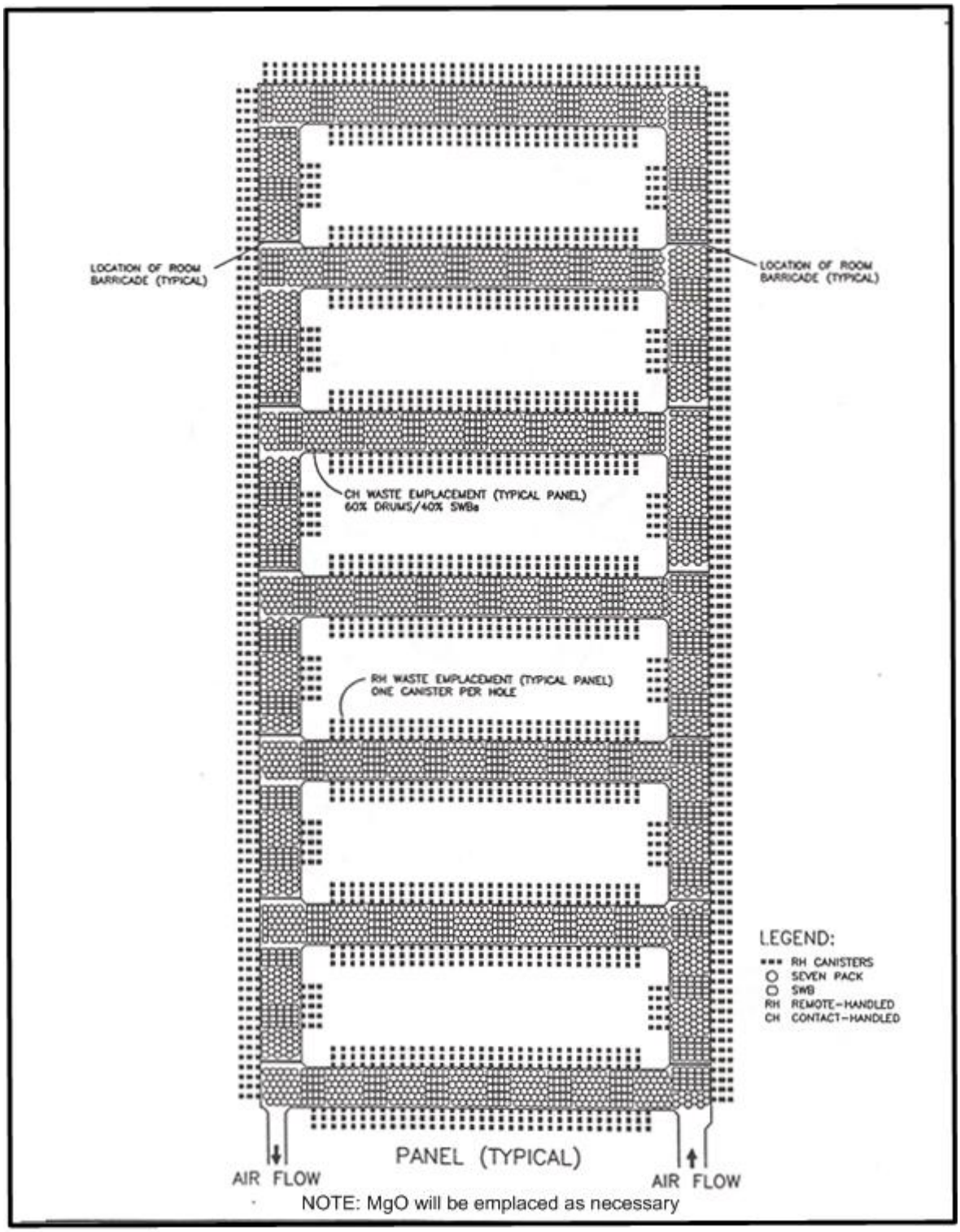


**Figure A2-8**
**Typical RH and CH Transuranic Mixed Waste Container Disposal Configuration**

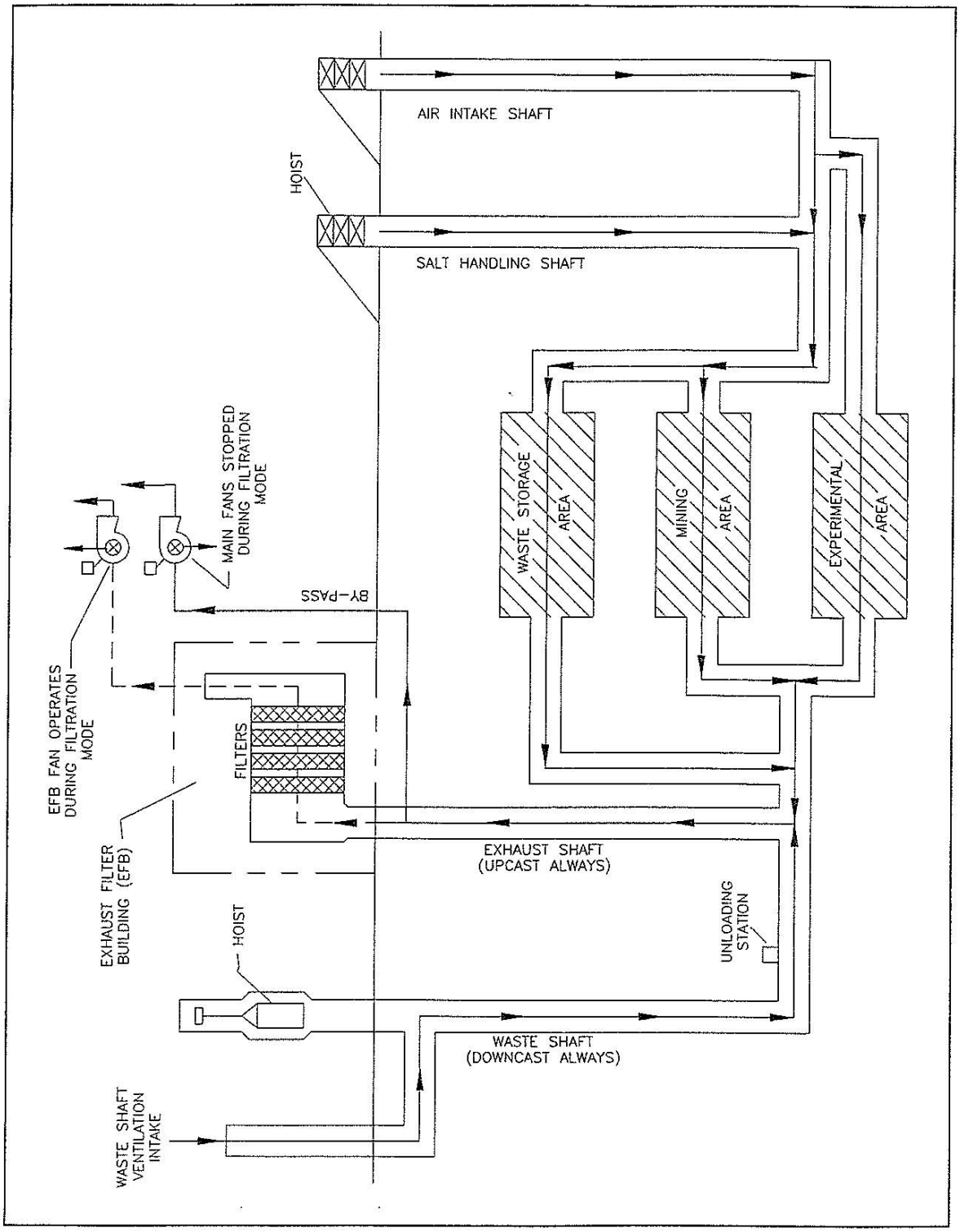


**Figure A2-9**
**Underground Ventilation System Airflow**

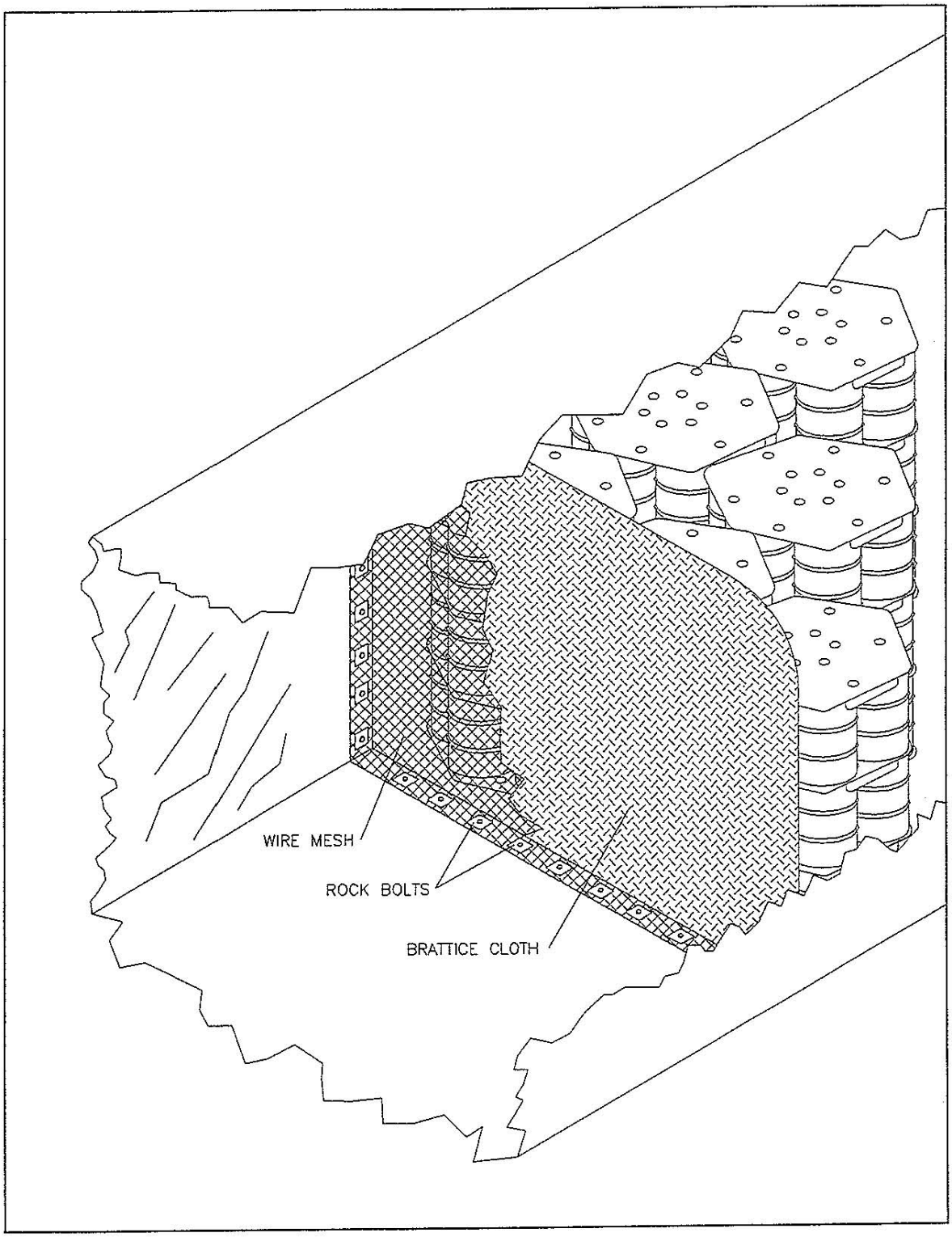


**Figure A2-11**
**Typical Room Barricade**

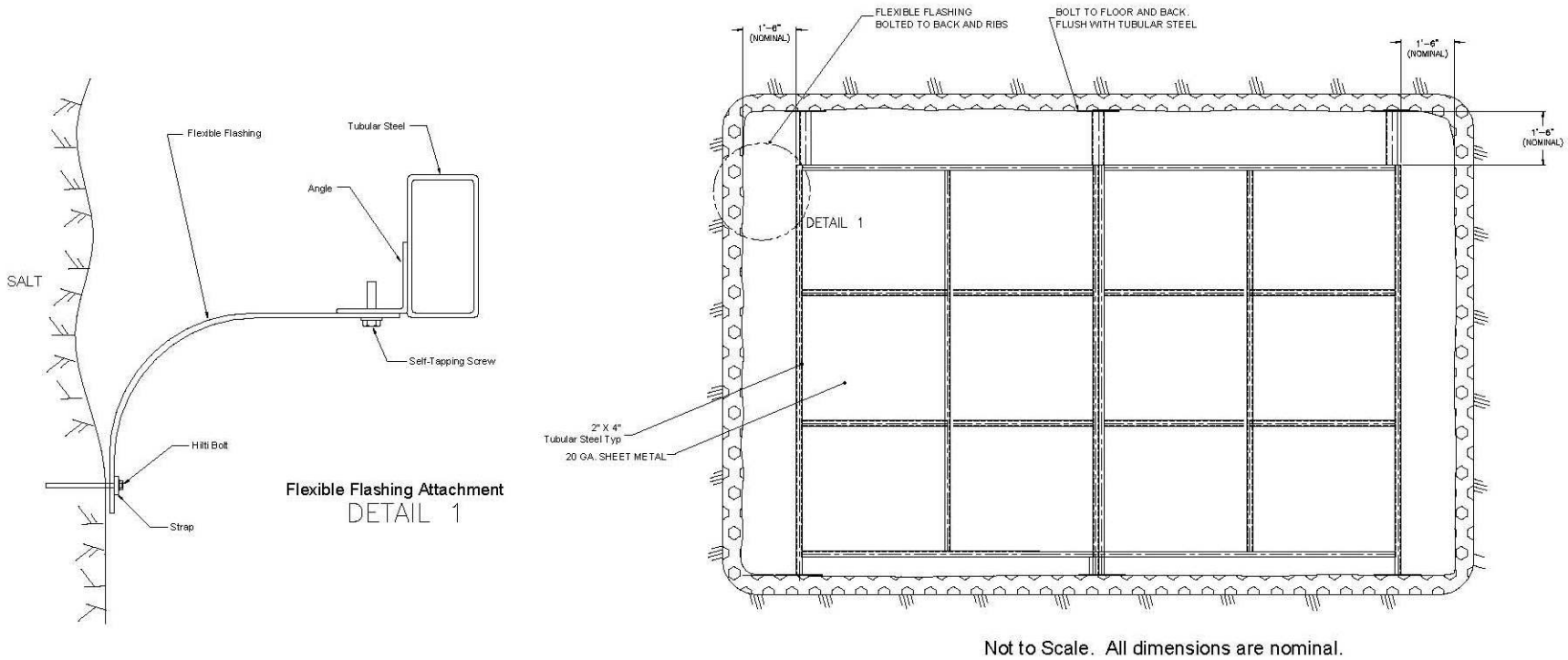


**Figure A2-11a**
**Typical Bulkhead**

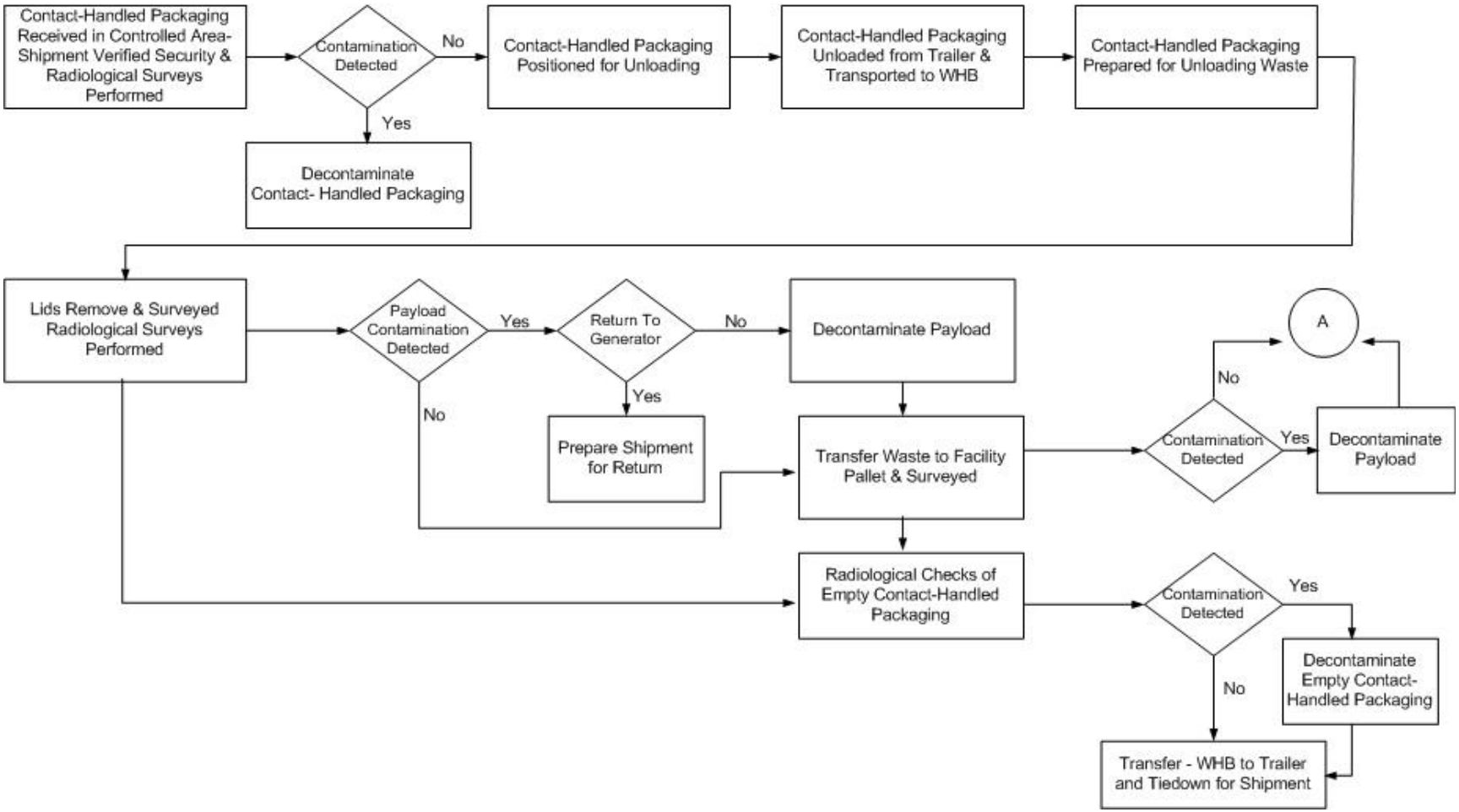


**Figure A2-12**
**WIPP Facility Surface and Underground CH Transuranic Mixed Waste Process Flow Diagram**

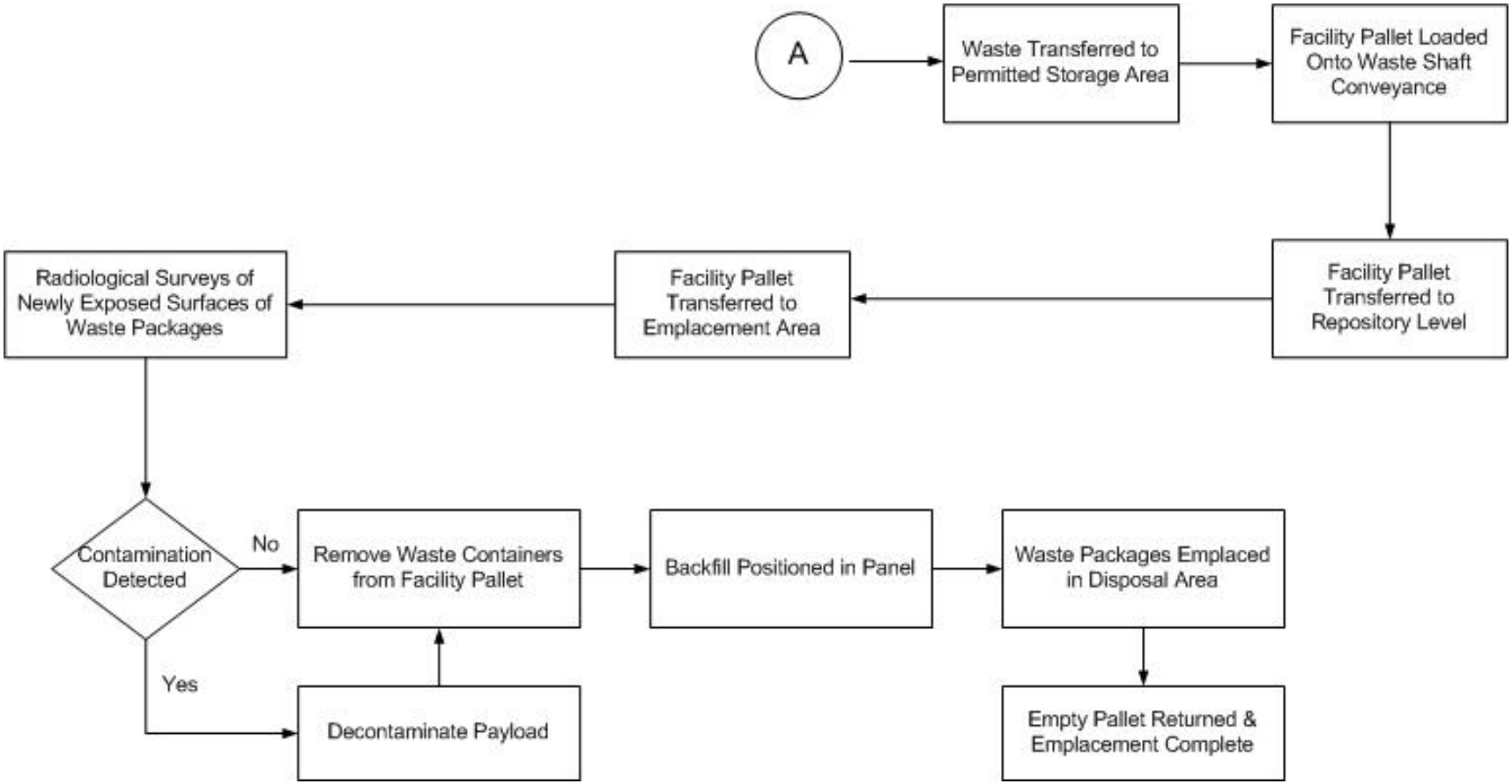


**Figure A2-12**
**WIPP Facility Surface and Underground CH Transuranic Mixed Waste Process Flow Diagram (Continued)**

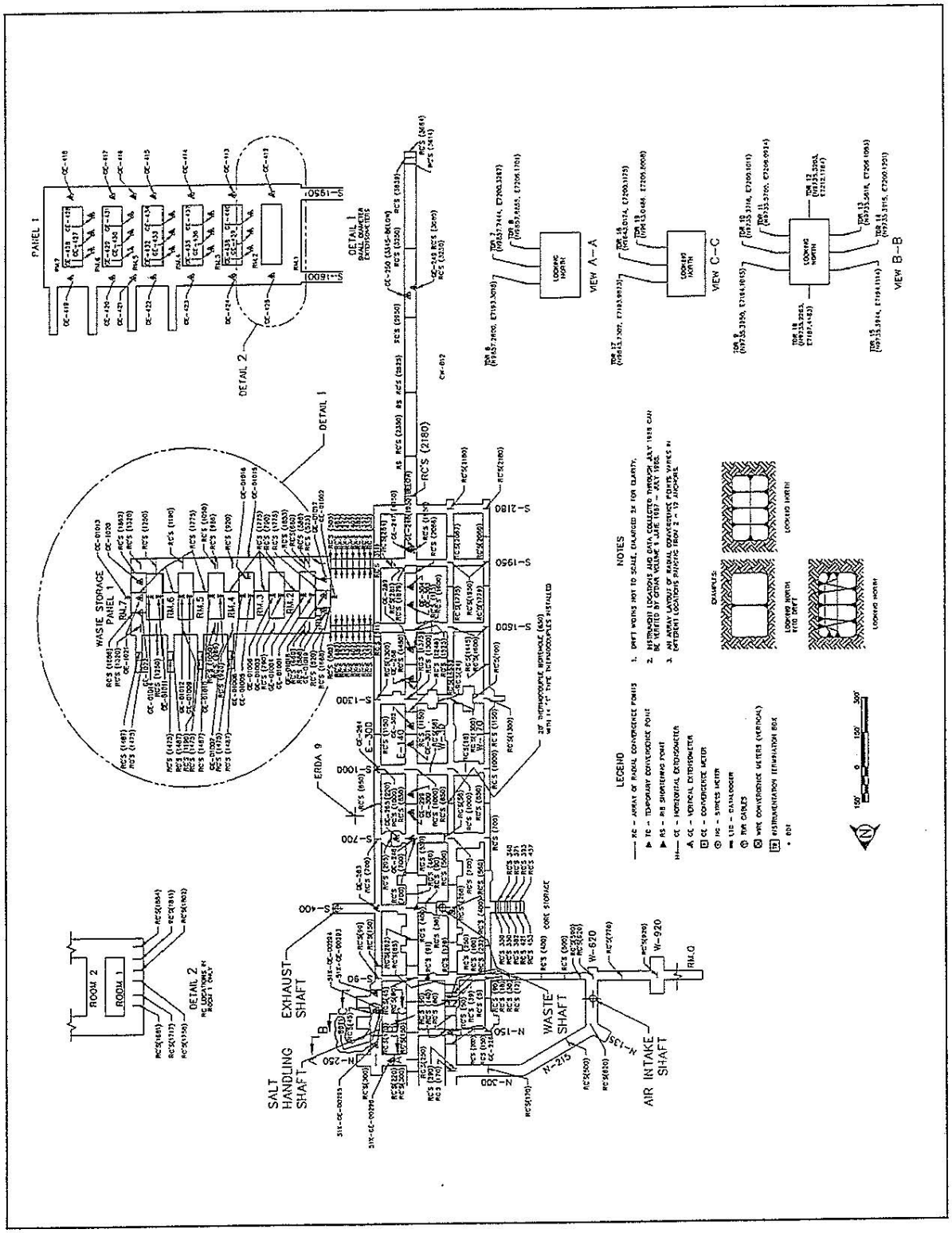


**Figure A2-13**
**Layout and Instrumentation - As of 1/96**

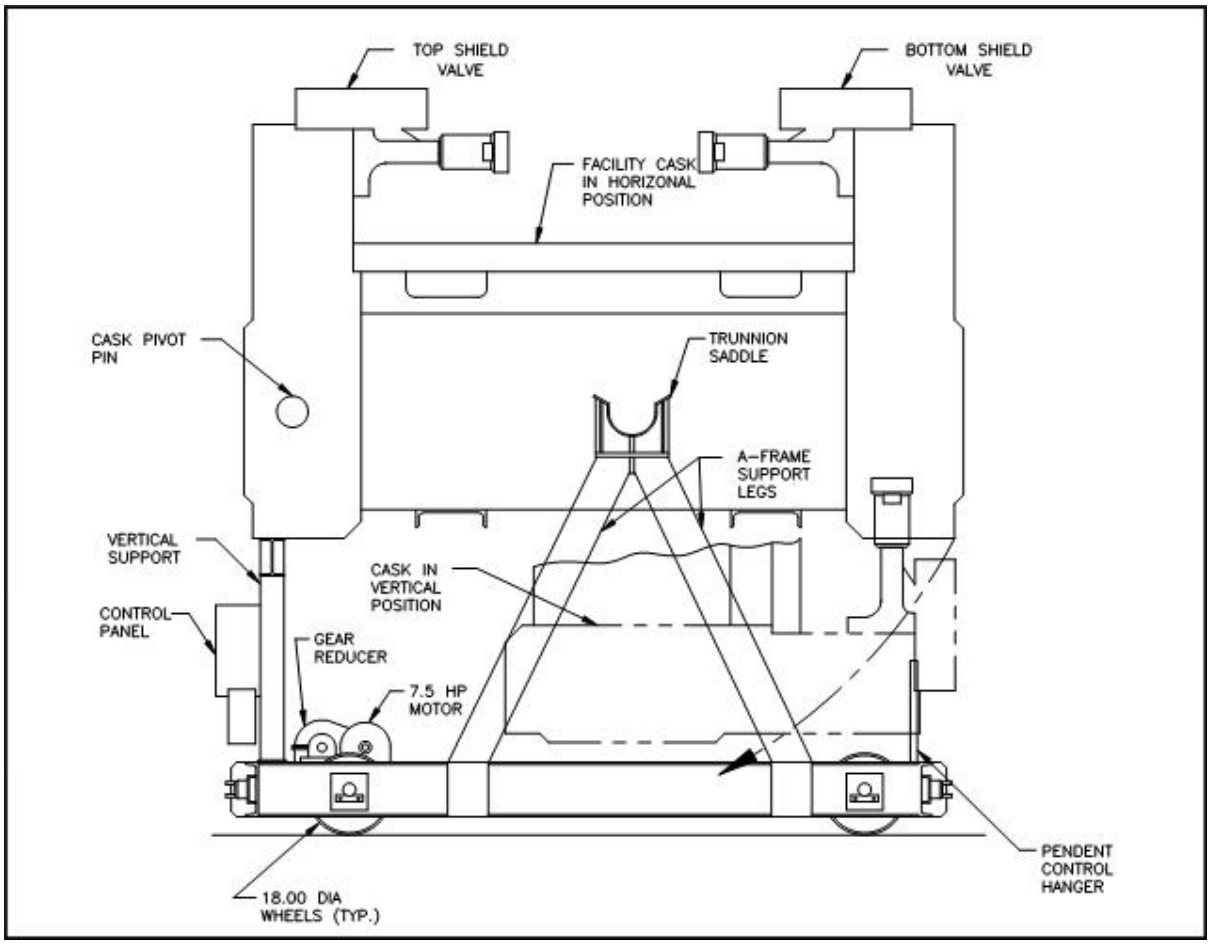


**Figure A2-14**
**Facility Cask Transfer Car (Side View)**

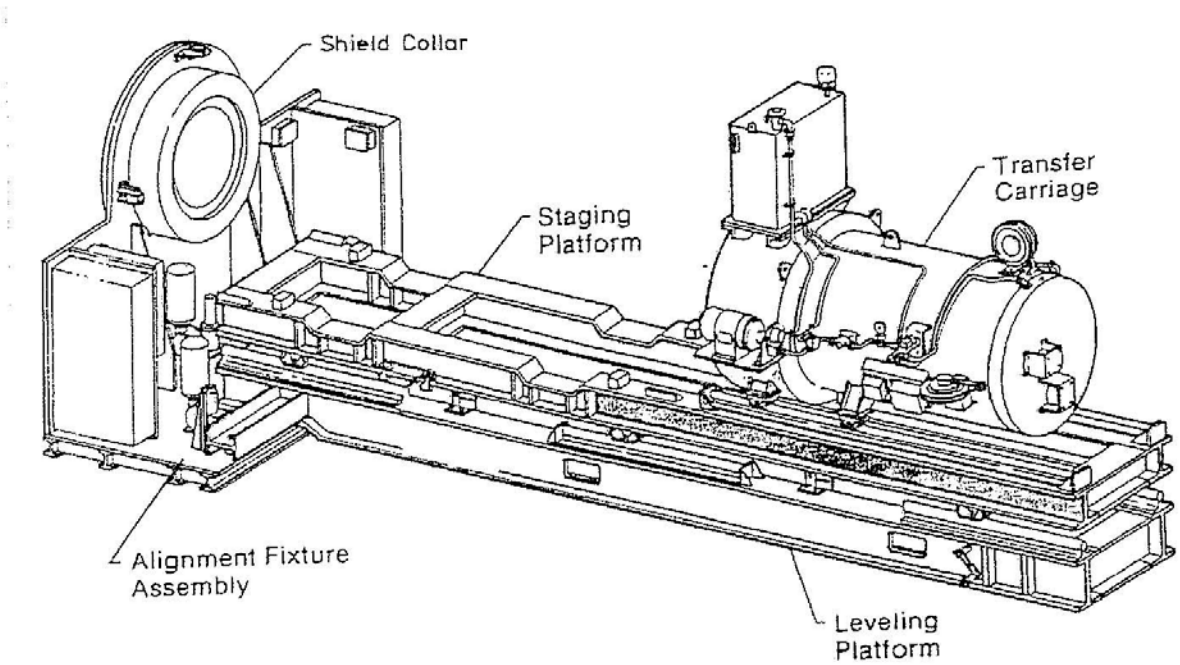


**Figure A2-15**
**Typical Emplacement Equipment**

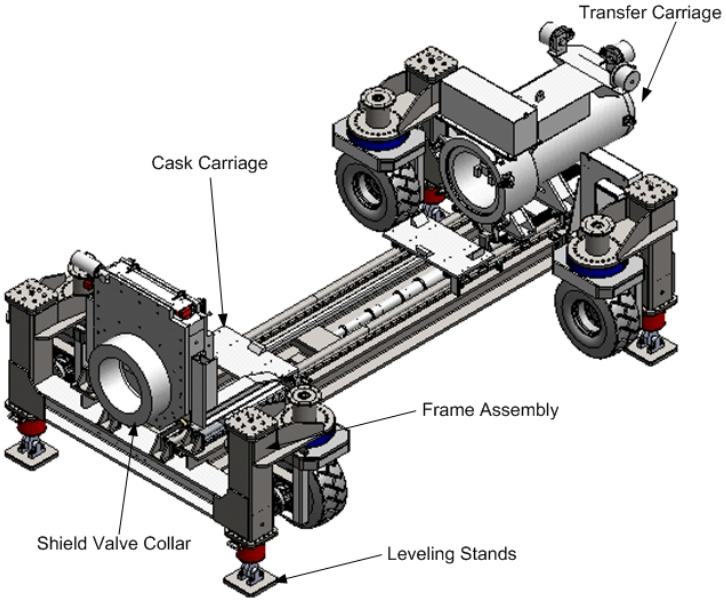


**Figure A2-15a**
**Typical Emplacement Equipment**

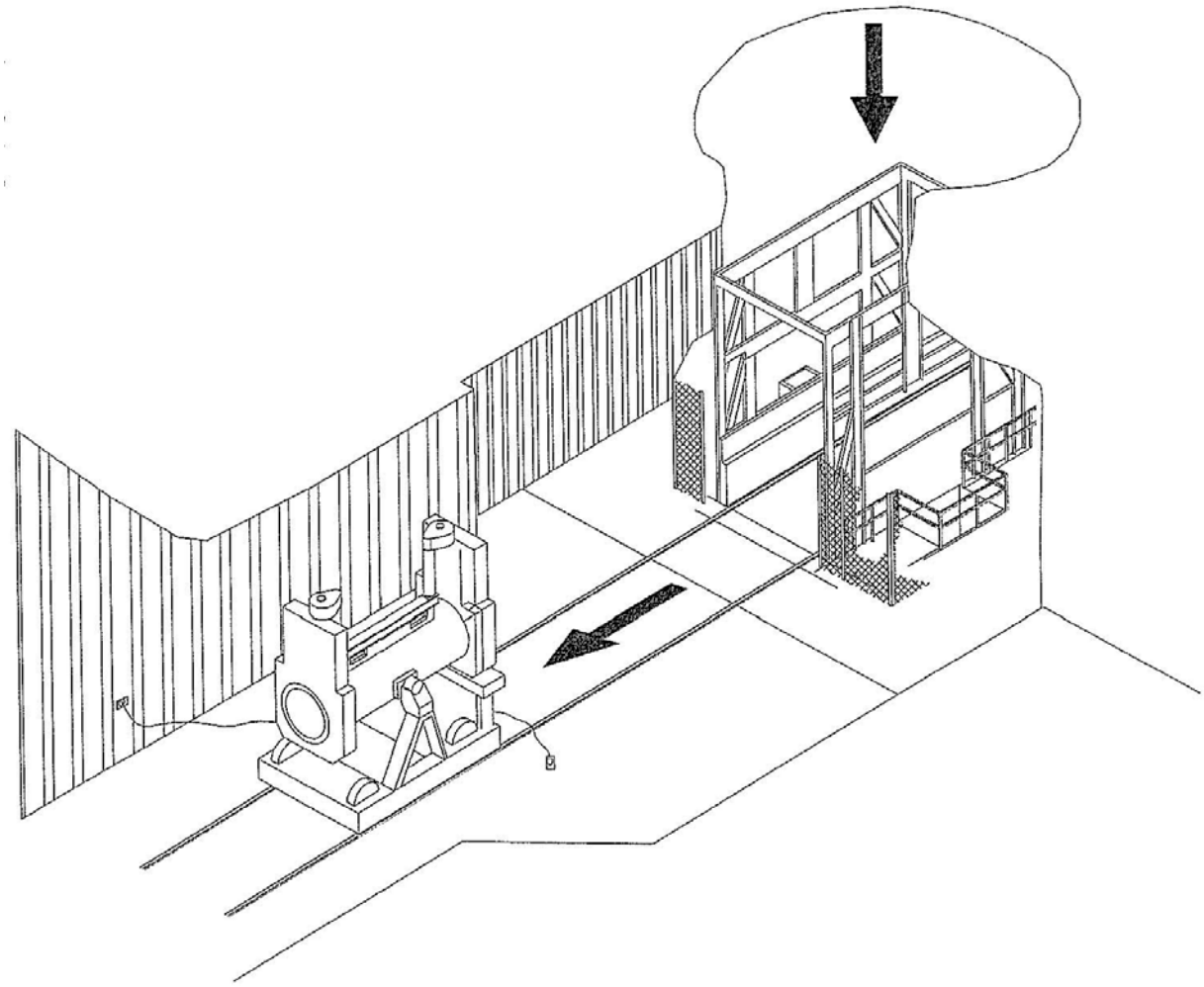

**Figure A2-16**
**RH TRU Waste Facility Cask Unloading from Waste Shaft Conveyance**

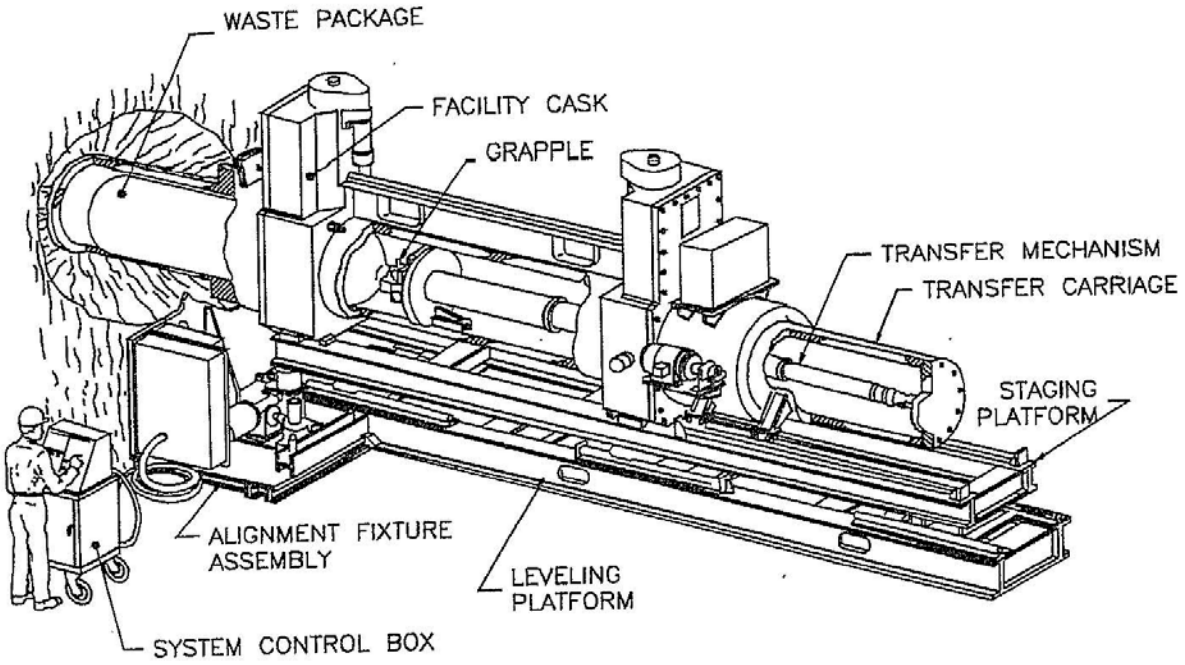


**Figure A2-17**
**Facility Cask Installed on the Typical Emplacement Equipment**

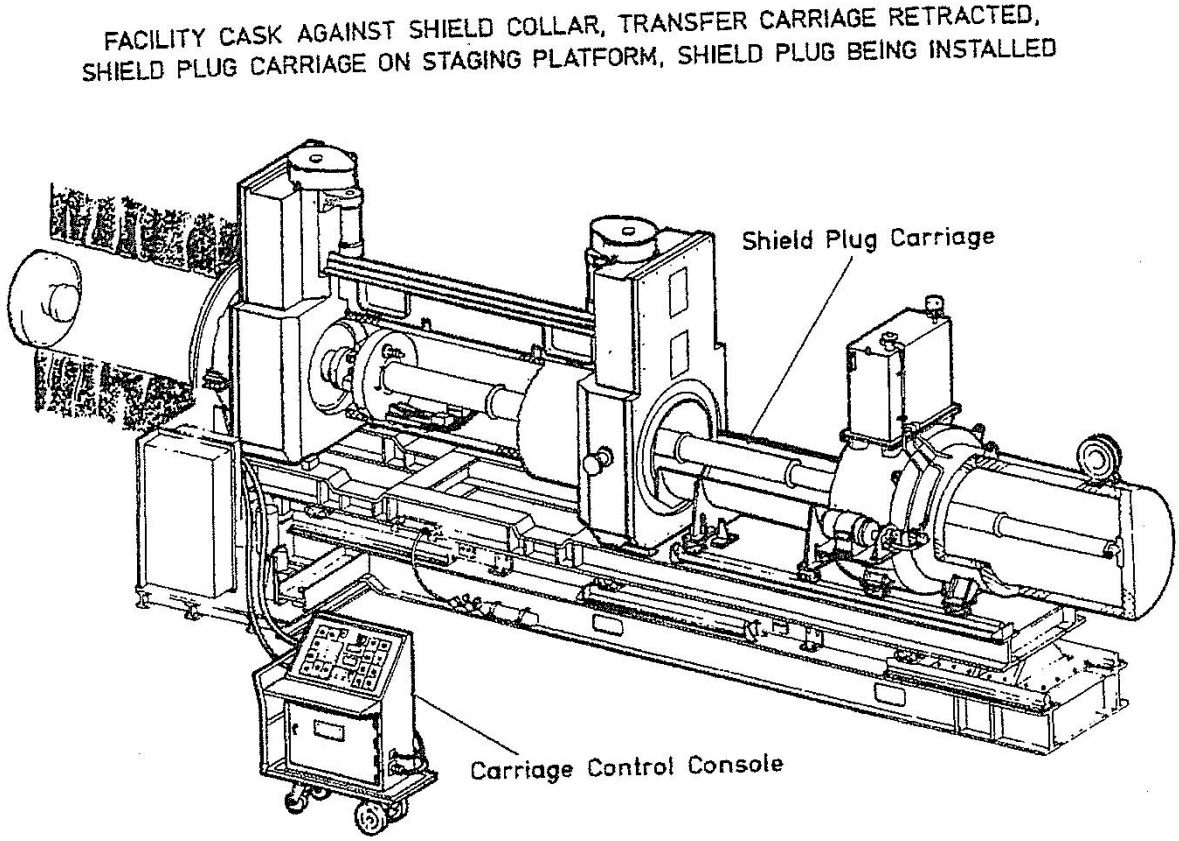


**Figure A2-18**
**Installing Shield Plug**

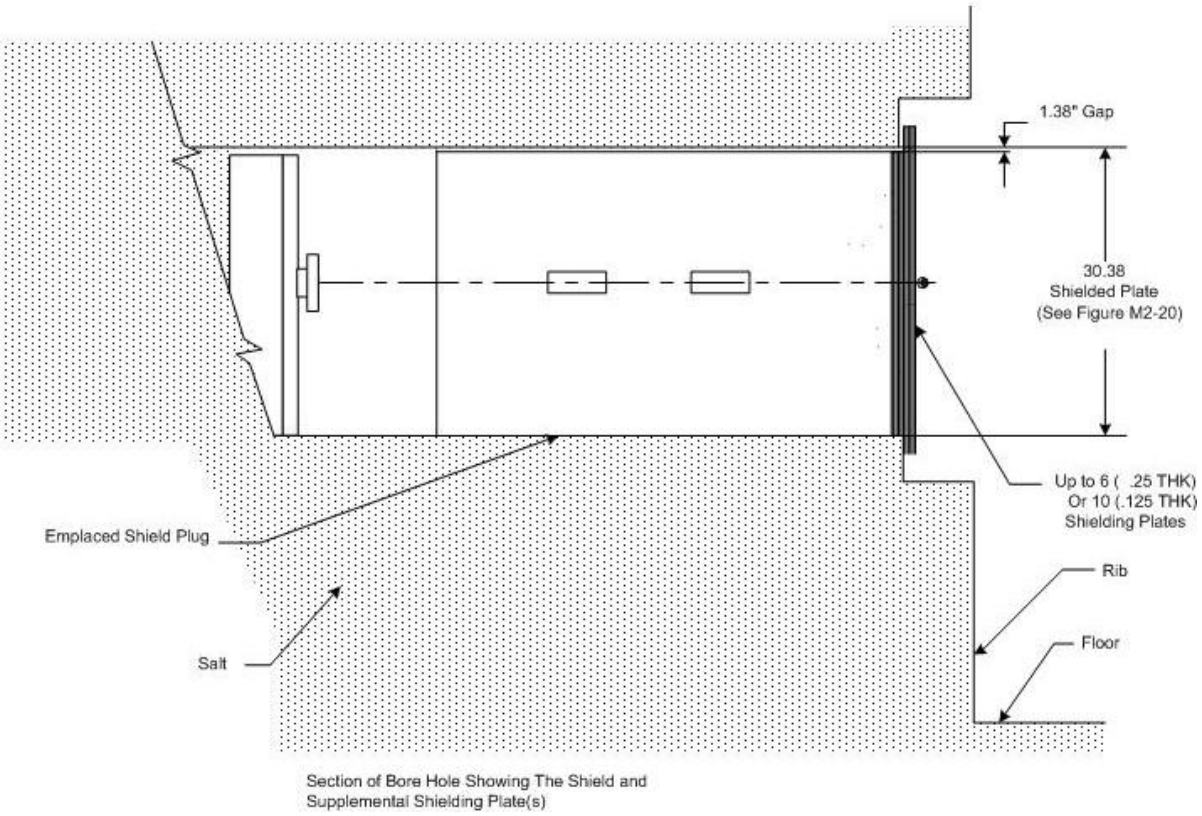


**Figure A2-19**
**Shield Plug Supplemental Shielding Plate(s)**

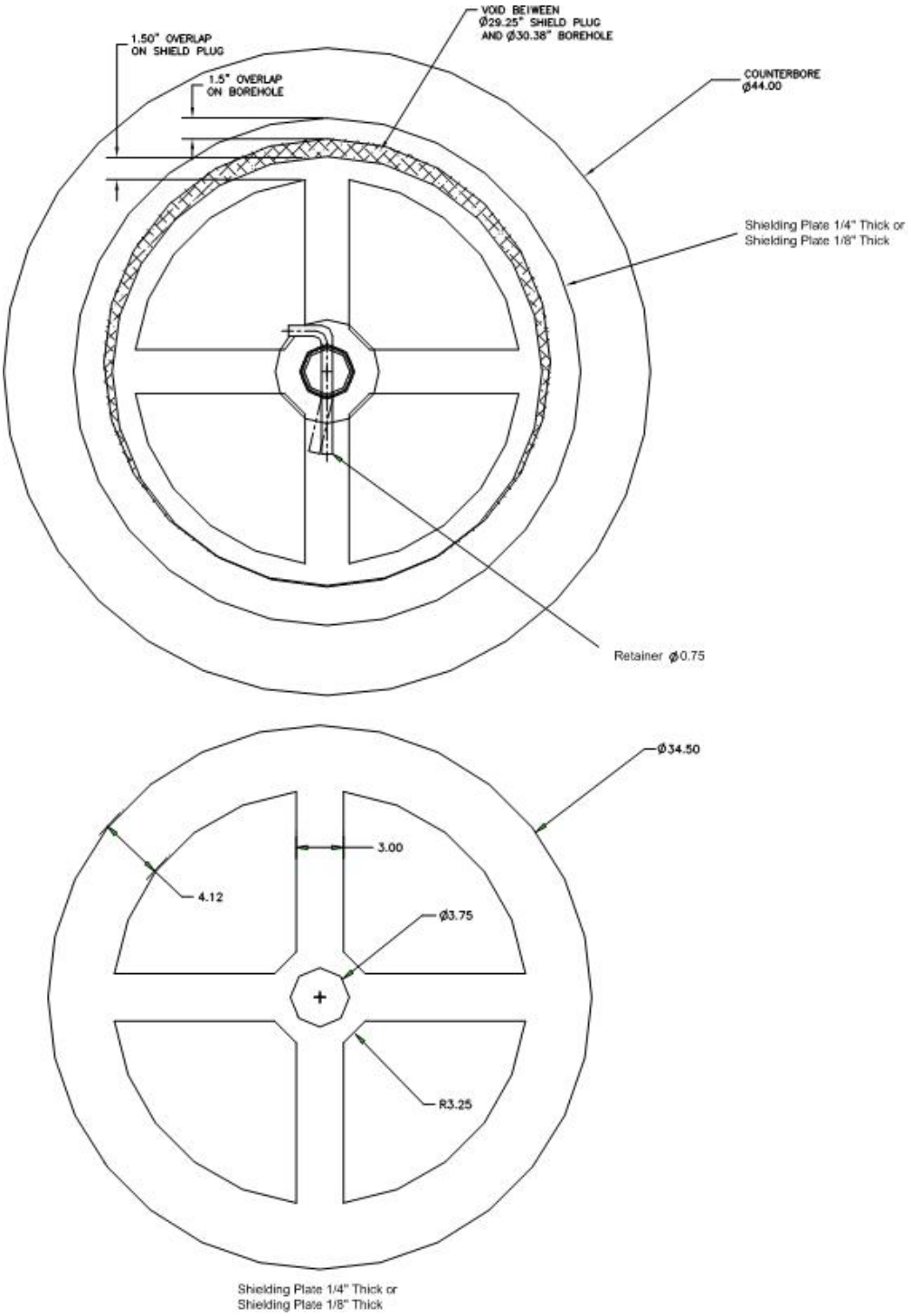


**Figure A2-20**
**Shielding Layers to Supplement RH Borehole Shield Plugs**

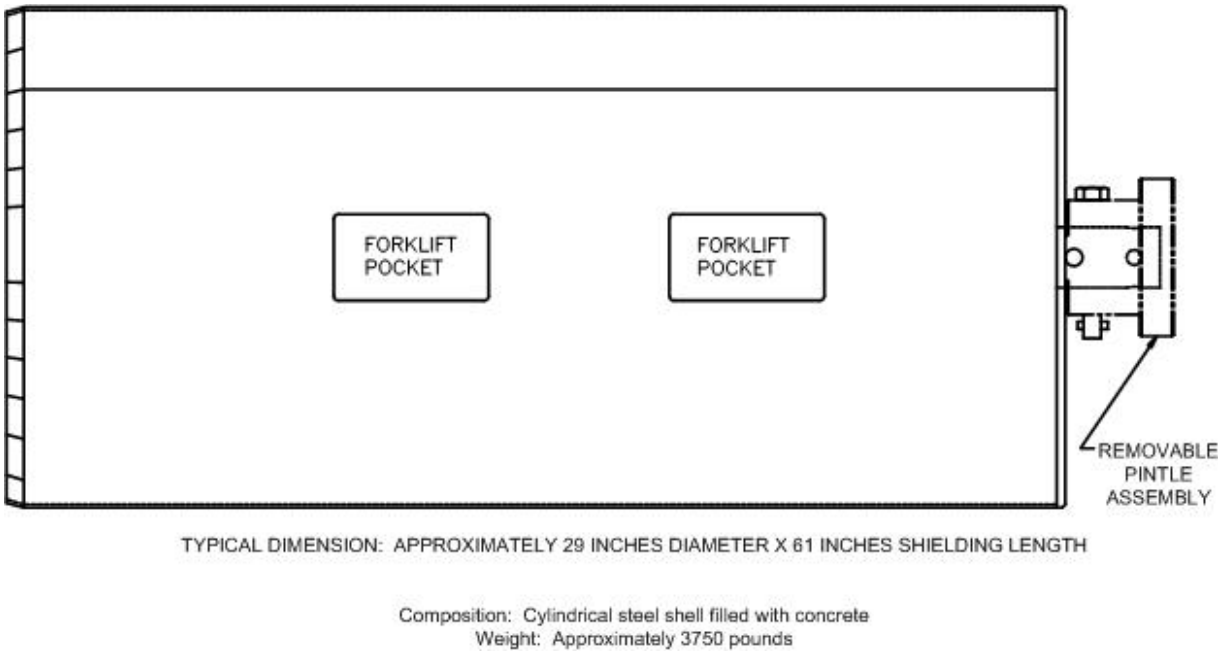


**Figure A2-21**
**Shield Plug Configuration**