ATTACHMENT ~~J~~ H1

ACTIVE INSTITUTIONAL CONTROLS DURING POST-CLOSURE

(This page intentionally blank)

ATTACHMENT ~~J~~ H1

ACTIVE INSTITUTIONAL CONTROLS DURING POST-CLOSURE

TABLE OF CONTENTS

Introduction 1

H1.1 Active Institutional Controls 4
- H1.1.1 Repository Footprint Fencing 5
- H1.1.2 Surveillance Monitoring 6
- H1.1.3 Maintenance and Remedial Actions 6
- H1.1.4 Control and Clean-up of Releases 7
- H1.1.5 Groundwater Monitoring 7

H1.2 Additional Post-Closure Activities 7

H1.3 Quality Assurance 7

References 8

LIST OF FIGURES

Figure	Title
Figure H1-1	Spatial View of WIPP Surface and Underground Facilities
Figure H1-2	Standard Waste Box and Seven-Pack Configuration
Figure H1-3	Typical Shaft Sealing System
Figure H1-4	Perimeter Fenceline and Roadway

ACRONYMS

CH	contact-handled
CFR	Code of Federal Regulations
DOE	U.S. Department of Energy
EPA	U.S. Environmental Protection Agency
LWA	Land Withdrawal Act
SWB	standard waste box
TRU	transuranic
WIPP	Waste Isolation Pilot Plant

ATTACHMENT ~~J~~ H1

ACTIVE INSTITUTIONAL CONTROLS DURING POST-CLOSURE

Introduction

Under the requirements of 20.4.1.500 NMAC (incorporating 40 CFR §264.118(b), the following activities identified as active institutional controls during post-closure are incorporated into the Post-Closure Plan.

The post-closure requirements of this permit include 20.4.1.500 NMAC, incorporating:

- 40 CFR §264.117(a)(1), which requires that

  "Post-closure care for each hazardous waste management unit subject to the requirements of §264.117 through 264.120 must begin after completion of closure of the unit and continue for 30 years after that date..."

- 40 CFR §264.601, which requires that

  "A miscellaneous unit must be...maintained and closed in a manner that will ensure protection of human health and the environment..."

- and 40 CFR §264.603, which requires that

  "A miscellaneous unit that is a disposal unit must be maintained in a manner that complies with §264.601 during the post-closure care period."

The containment requirements for a disposal system for transuranic (**TRU**) radioactive wastes are defined in Title 40 CFR §191.13 (U.S. Environmental Protection Agency [**EPA**] 1993). 40 CFR §191.14 is titled Assurance Requirements. With regard to the active institutional controls aspect of Assurance Requirements, 40 CFR §191.14 states the following:

> "To provide the confidence needed for long-term compliance with the requirements of §191.13, disposal of spent fuel or high-level or transuranic wastes shall be conducted in accordance with the following provisions... (a) Active institutional controls over disposal sites should be maintained for as long a period of time as is practicable after disposal; however, performance assessments that assess isolation of the wastes from the accessible environment shall not consider any contribution from active institutional controls for more than 100 years after disposal... "

40 CFR §191.12 states the following:

> "Active institutional controls mean:
> 1) controlling access to a disposal site by any means other than passive institutional controls,
> 2) performing maintenance operations or remedial actions at a site,
> 3) controlling or cleaning up releases from a site, or
> 4) monitoring parameters related to disposal system performance."

Purpose: This Permit Attachment describes the design of a system that the Permittees will implement for compliance with the requirements of 20.4.1.500 NMAC (incorporating 40 CFR §264.118(b)) and 40 CFR §191.14(a) to control access to the Waste Isolation Pilot Plant (**WIPP**) disposal site and implement maintenance and remedial actions pertaining to the site access controls. In addition, this Permit Attachment addresses the scheduling process for control of inspection, maintenance, and periodic reporting related to long-term monitoring. Long-term monitoring addresses the monitoring of disposal system performance, as required by 40 CFR §191.14(b), and environmental monitoring, in accordance with this Permit and the Consultation and Cooperation Agreement between the U.S. Department of Energy (**DOE**) and the state of New Mexico. The scheduling process will also address evaluation of testing activities related to the permanent marker system design contained within the passive institutional controls (not required by this permit).

Implementation of active institutional controls at the WIPP will commence when final facility closure is achieved, as specified in ~~Module II~~ Permit Part 6 and Permit Attachment ~~I~~ G. Implementation of active institutional controls marks the transition from the active life of the facility (which ends upon certification of closure) to the post-closure care period, as specified in 20.4.1.500 NMAC (incorporating 40 CFR §264 Subpart G). The Permittees will continue the imposition of active institutional controls under this Permit until NMED approves the post-closure certification specified in ~~Module VI~~ Permit Part 7 and Permit Attachment ~~J~~ H.

Decommissioning activities include decontamination and site restoration. The decontamination effort will be completed prior to sealing of the shafts to allow disposal of all derived waste (radioactive and/or mixed waste derived from TRU/TRU-mixed waste received at the WIPP) into the repository. The implementation of active institutional controls upon certification of facility closure will prevent human intrusion into the repository. The Permittees' restoration efforts will return the land disturbed by the WIPP activities to a stable ecological state that will assimilate with the surrounding undisturbed ecosystem. Necessary exceptions to returning the site to its full pre-WIPP condition include measurements associated with long-term monitoring.

Scope: The active institutional control requirements include a means of controlling access to the site of the repository's surface footprint (the repository area projected to the surface) and maintenance, including corrective actions, for access control system components. Active control of access to the site will be exercised by the Permittees for the duration of the post-closure care period. Although the Permittees are only required to maintain active institutional controls until approval of the post-closure certification by NMED, the Permittees will continue active institutional controls for at least ~~one hundred (~~100~~)~~ years after final facility closure to satisfy other regulatory requirements. Control of access will prevent intrusion into the disposed waste by deep drilling or mining for natural resources. This Permit Attachment also specifies a process for scheduling activities related to the long-term monitoring of the repository. Some of the activities supporting the monitoring programs will be initiated during the active life of the facility to establish databases. These activities are planned to continue beyond closure through the time after removal of the site structures and return of the land disturbed by the WIPP activities to a stable ecological state that will assimilate with the surrounding undisturbed ecosystem. Long-term monitoring requirements will be necessarily integrated with efforts toward returning the land to a stable ecological state.

Background: The WIPP was sited and designed as a research and development facility to demonstrate the safe disposal of radioactive wastes. The wastes are derived from DOE defense-related activities. Specifically, the mission of the WIPP project is to conduct research,

demonstration, and siting studies relevant to the permanent disposal of TRU wastes. Most of these wastes will be contaminated with hazardous constituents, making them mixed wastes.

The LWA addresses the disposal phase of the WIPP project, the period following closure of the site, and the removal of the surface facilities. The LWA set aside 10,240 acres (4,144 hectares) located in Eddy County, 26 miles (42 kilometers) east of Carlsbad, New Mexico, as the WIPP site. A 277-acre (112-hectare) portion within the 10,240 acres (4,144 hectares) is bounded by a barbed wire fence. This fenced area contains the surface facilities and the mined salt piles for the WIPP site. Figure ~~J~~ H1-1 is a cutaway illustrating the spatial relationship of the surface facilities and the underground repository.

Upon receipt of the necessary certifications and permits from the EPA and the New Mexico Environment Department, the Permittees will begin disposal of contact-handled (**CH**) and remote-handled (**RH**) TRU and TRU mixed waste in the WIPP. This waste emplacement and disposal phase will continue until the regulated capacity of the repository of 6,200,000 cubic feet (175,588 cubic meters) of TRU and TRU mixed waste has been reached, and as long as the Permittees comply with the requirements of the Permit. For the purposes of this Permit Attachment, this time period is assumed to be 25 years. The waste will be shipped from DOE facilities across the country in specially designed transportation containers certified by the Nuclear Regulatory Commission. The transportation routes from these facilities to the WIPP have been predetermined. The CH TRU mixed waste will be packaged in 55-gallon (208-liter), 85-gallon (32~~0~~2-liter), 100-gallon (379-liter) steel drums, standard waste boxes (**SWBs**), and/or ten drum overpacks (**TDOPs**). An SWB is a steel container having a free volume of ~~approximately~~ 6~~5~~6.3 cubic feet (1.8~~5~~8 cubic meters). Figure ~~J~~ H1-2 shows the general arrangement of a seven-pack of drums and an SWB as received in a Contact-Handled Package. RH TRU mixed waste inside a Remote-Handled Package is contained in one or more of the allowable containers described in Permit Attachment ~~M~~ A1.

Upon receipt and inspection of the waste containers in the waste handling building, the containers will be moved into the repository 2,150 feet (655 meters) below the surface. The containers will then be transported to a disposal room. (See Figure ~~J~~ H1-1 for room and panel arrangement.) The initial seven disposal rooms are in Panel 1. Panel 1 is the first of eight panels planned to be excavated. Special supports and ground control corrective actions have been implemented in Panel 1 to ensure its stability. Upon filling an entire panel, that panel will be closed to isolate it from the rest of the repository and the ventilation system. During the period of time it takes to fill a given panel, an additional panel will be excavated. Sequential excavation of Panels 2 through 8 will ensure that these individual panels remain stable during the entire time a panel is being filled with waste. Ground control maintenance and evaluation with appropriate corrective action will be required to ensure that Panels 9 and 10 (ventilation and access drifts in the repository) remain stable.

Decontamination of the WIPP facility will commence with a detailed radiation survey of the entire site. Contaminated areas and equipment will be evaluated and decontaminated in accordance with applicable requirements. Where decontamination efforts identify areas that meet clean closure standards for permitted container storage units and are below radiological release criteria, routine dismantling and salvaging practices will determine the disposition of the material or equipment involved. Material and equipment that do not meet these standards and criteria will be emplaced in the access entries (Panels 9 and/or 10). Upon completion of emplacement of the contaminated facility material, the entries will be closed and the repository shafts will be sealed. Final repository closure includes sealing the shafts leading to the

repository. Figure ~~J~~ H1-3 illustrates the shaft sealing arrangement. Certification of closure will end disposal operations and initiate the post-closure care period for implementation of active institutional controls.

~~J~~H1.1 Active Institutional Controls

Active institutional controls during post-closure consist of three elements:

- controlling access to a disposal site,
- performing maintenance operations or remedial actions at a site, and
- controlling or cleaning up releases from a site.

The LWA has removed the WIPP site from public use as a site for mining and other types of mineral resource extraction. Since any type of exploration activity would require authorization, the issuance of approval to intrude upon the repository is precluded by the LWA. The existence of the LWA as law permits meeting the requirements of the first element above by implementing low technology barriers. These barriers include a posted fence and active surveillance at a frequency that denies sufficient time for an individual or organization to intrude into the repository undetected using today's drilling technology. Maintenance and remedial actions at the WIPP site will be conducted by the Permittees at the time of implementing the access controls for the site. The control or cleanup of releases from the site will be conducted as part of the operational program prior to sealing of the shafts. This is necessary to ensure that all derived waste is disposed of within the repository prior to shaft sealing.

The Permittees shall maintain the access controls. This requirement includes the maintenance and corrective actions necessary to ensure that the fence and patrol requirements (surveillance) are met. The active institutional controls to be implemented by the Permittees after final closure are the following:

1. A fence line will be established to control access to the repository footprint area on the surface. A standard four-strand (three barbed and one unbarbed, in accordance with the Bureau of Land Management specifications) wire fence will be erected along the perimeter of the repository surface footprint. To provide access to the repository footprint during construction of the berm (which may be built in multiple sections simultaneously), the fence will have gates placed approximately midway along each of the four sides. these gates will remain locked with access controlled by the Permittees. The western gate will be 20 feet (6 meters) wide. The remaining three gates will each be 16 feet (4.9 meters) wide. Additional fencing will be constructed where appropriate for remote locations that are used for disposal system monitoring. Such fences will meet the same construction specifications as the repository footprint perimeter fence.

2. Unpaved roadways 16 feet (4.9 meters) wide will be established along the perimeter of the barbed wire fence as well as along the WIPP site boundary. These roadways will be constructed so as to provide ready vehicle access to any point around the fenced perimeter and the site boundary. These roadways will facilitate inspection and maintenance of the fenceline and will allow visual observation of the repository footprint and the site boundary to the extent permitted by the lay of the land. These roadways will connect to the paved south access road. Roads to remote sites will also be constructed and maintained where appropriate.

3. The fence line will be posted with signs having, as a minimum, a legend reading "Danger—Unauthorized Personnel Keep Out" (20.4.1.500 NMAC (incorporating 40 CFR §264.14[c])) and warning against entering the area without specific permission of the Permittees. The legend must be written in English and Spanish. The signs must be legible from a distance of at least 25 feet (7.6 meters). The size of the visual warning and the spacing of the warning signs will be sufficiently large and close to ensure that one or more of the signs can be seen from any approach prior to an individual actually making contact with the fence line. In no case will the spacing be greater than 300 feet (91.5 meters).

4. The Permittees will ensure that periodic inspection and expedited corrective maintenance are conducted on the fence line, its associated warning signs, and roadways.

5. The Permittees will provide for routine periodic patrols and surveillance of all areas controlled by or under the authority of the Permittees by personnel trained in security surveillance and investigation.

6. The Permittees will implement the periodic monitoring requirements of the long-term monitoring system.

7. The Permittees will submit a Permit modification request for any proposed modifications to the active institutional controls appropriate for access control, as specified in 20.4.1.900 NMAC (incorporating 40 CFR §270.42).

8. The Permittees will immediately take appropriate action to address abnormal conditions identified during periodic surveillance and inspections. Abnormal conditions include any natural or human-caused conditions which would affect the integrity of the active institutional controls.

9. Reports addressing activities associated with the performance of the active access controls after final closure will be prepared periodically according to applicable requirements by the Permittees for submittal to the appropriate regulatory and legislative authorities.

~~J~~H1.1.1 Repository Footprint Fencing

Access to an area approximately 2,780 feet by 2,360 feet (875 meters by 720 meters) will be controlled by a four-strand barbed wire fence. A single gate will be included along each side of the fence for access. These gates will remain locked with access controlled by the Permittees. Around the perimeter of the fence, an unpaved roadway 16 feet (4.9 meters) wide will be cut to allow for patrolling of the perimeter. Figure ~~J~~ H1-4 is an illustration of the fence line in relation to the repository footprint. Patrolling of the perimeter is based upon the need to ensure that no mining or well drilling activity is initiated that could threaten the integrity of the repository.

Fencing off an area larger than the disposal area footprint would not significantly reduce the risk of intrusion but would interfere with cattle grazing established prior to the LWA. The LWA states that the Secretary of Energy can allow grazing to continue where it was established prior to enactment of the LWA. Based upon current drilling technologies, discussions with local well drilling organizations, and observation of well drilling activities in the WIPP vicinity, it typically

requires at least two to three days for a driller to set up a deep drilling rig and commence actual drilling operations. Attaining the 2,150-foot (655-meter) depth that would approach the repository horizon takes at least another week to 10 days. Based upon current drilling practices, patrolling the fenced area two to three times weekly would identify any potential drilling activity well before any breach of the repository could occur. Therefore, the perimeter fence will be patrolled three times weekly after final closure.

Construction of access control systems using higher technology than described is not required. Likewise, continuous surveillance whether human or electronic is not required.

~~J~~H1.1.2 Surveillance Monitoring

The Permittees will conduct periodic surveillance of the site and the repository footprint during the post-closure period. Unpaved roadways around the WIPP site boundary and around the repository footprint will facilitate such surveillance. Contractual arrangements with a local organization such as the Eddy County Sheriff's Department may be established which would provide some distinct advantages. Among the advantages are the following:

- deputies are trained in patrol and surveillance activities,
- deputies are authorized to arrest members of the general public who are found to be violating trespassing laws,
- the liability associated with apprehension, attempted apprehension, or circumstances arising from attempts would remain with the Sheriff's Department, and
- the general area to be patrolled is already a part of the Sheriff's area of responsibility.

Surveillance will consist of drive-by patrolling around the fenced perimeter a minimum of three times per week. In the course of the patrol, particular note will be taken of the fence integrity. In addition, the locked condition of each gate will be checked to ensure that gate integrity is maintained and there is no evidence of tampering. Surveillance will also include visual observation of the entire enclosed area for any signs of human activity. Additionally, surveillance patrols will be conducted around the site boundary's perimeter for signs of unauthorized human activities. A routine summary of each month's surveillance activity will be prepared documenting the date and time of each patrol and any unusual circumstances that may have been observed. This surveillance routine will continue throughout the post-closure care period.

~~J~~H1.1.3 Maintenance and Remedial Actions

Anticipated maintenance and remedial action issues during the post-closure care period are minimal and should encompass such issues as

- fence and road maintenance,
- repair of any damage that occurs,
- response to evidence of potential erection of drilling equipment, and
- response to unauthorized entry into prohibited areas.

The Permittees will provide maintenance services within a reasonable time after the need is identified during routine patrolling activity. Any observed vandalism or unauthorized entry will be investigated and action will be taken as the circumstances warrant.

~~J~~H1.1.4 Control and Clean-up of Releases

The decontamination process and disposal of the derived waste will be completed prior to sealing the shafts and final facility closure. With the location of the WIPP repository at 2,150 feet (655 meters) below the surface and with panels closed and shafts sealed, the potential for releases of radioactive material or hazardous constituents following the sealing of the shafts is precluded. There will be no credible pathway for releases from the repository other than human intrusion. Routine patrols in accordance with access control requirements will preclude human intrusion into the repository during the post-closure period.

~~J~~H1.1.5 Groundwater Monitoring

Groundwater monitoring is the only monitoring program required by the Permit that will be conducted throughout the post-closure care period. The post-closure groundwater monitoring requirements are specified in Permit ~~Module VI~~ Part 7 and Permit Attachment L.

~~J~~H1.2 Additional Post-Closure Activities

With the certification of closure of WIPP and return of the land disturbed by the WIPP activities to a stable ecological state that will assimilate with the surrounding undisturbed ecosystem, continuous occupancy of the site for operational and security purposes will cease. Any additional activities will be imposed through the Post-Closure Care Permit issued by NMED after certification of closure.

~~J~~H1.3 Quality Assurance

The quality assurance and quality control plan will be applied to the procurement of materials for and the erection of the fencelines enclosing the repository footprint. In particular, quality control inspection of the placement and tensioning of the barbed wire and chain link fabric will be applied and utilized to provide reasonable assurance that the fencing structures will function during the post-closure care period with normal maintenance.

Quality assurance and quality control will also be applied to the sampling and analyses supporting the environmental monitoring program. Contractors collecting samples and laboratories conducting analyses for the Permittees shall be qualified in accordance with guidelines prescribed in the most current edition of the Permittees' quality assurance program document at the time that the contracts are awarded.

References

EPA (U.S. Environmental Protection Agency). 1993. 40 CFR Part 191 Environmental Radiation Protection Standards for the Management and Disposal of Spent Nuclear Fuel, High-Level and Transuranic Radioactive Waste; Final Rule. *Federal Register*, Vol. 58, No. 242, pp. 66398-66416, December 20, 1993. Office of Radiation and Indoor Air, Washington, D.C.

U.S. Congress. 1992. Waste Isolation Pilot Plant Land Withdrawal Act. Public Law 102-579, 106 Stat. 4777, October 1992. 102nd Congress, Washington, D.C.

FIGURES

(This page intentionally blank)

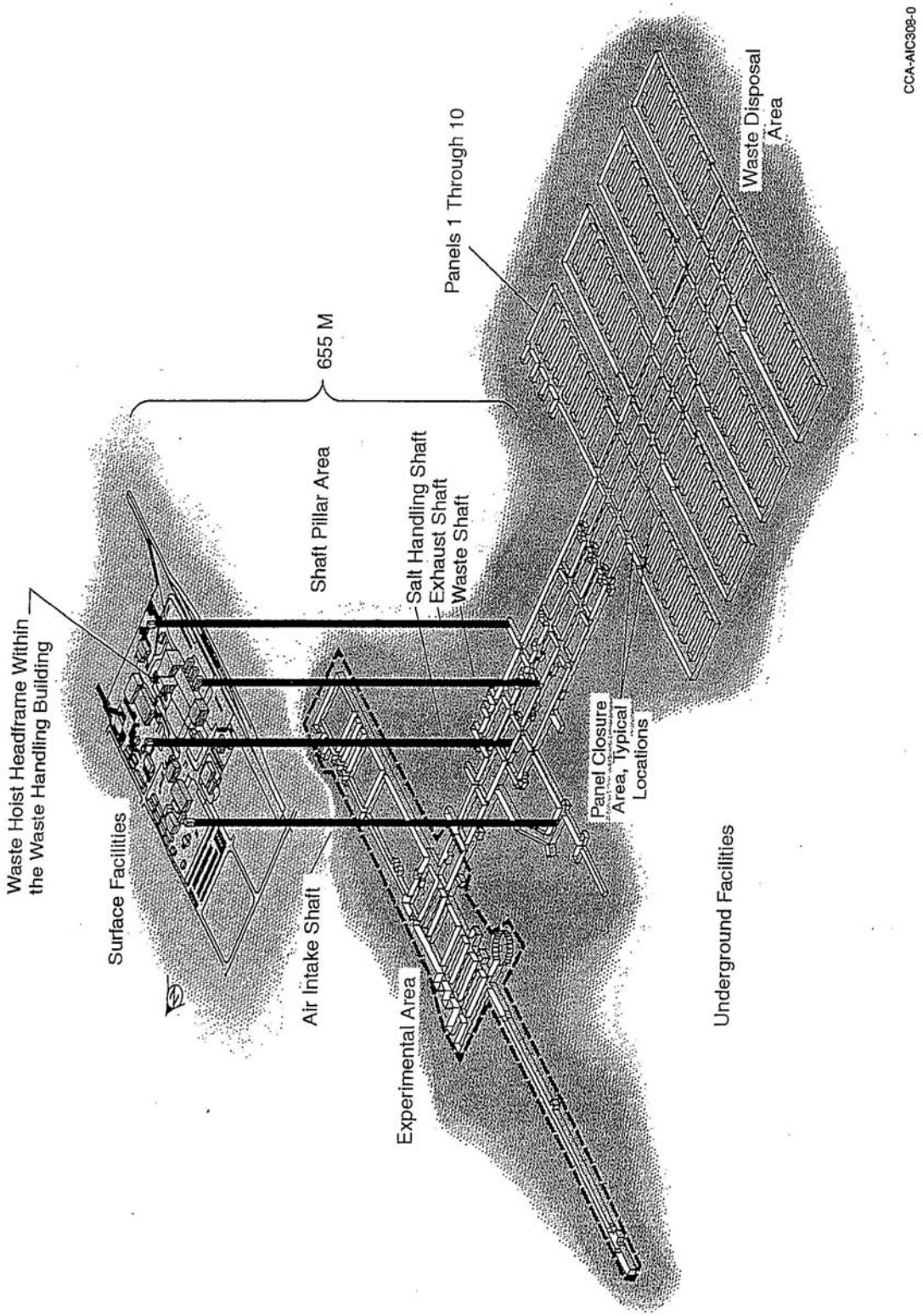

Figure ~~J~~ H1-1
Spatial View of WIPP Surface and Underground Facilities

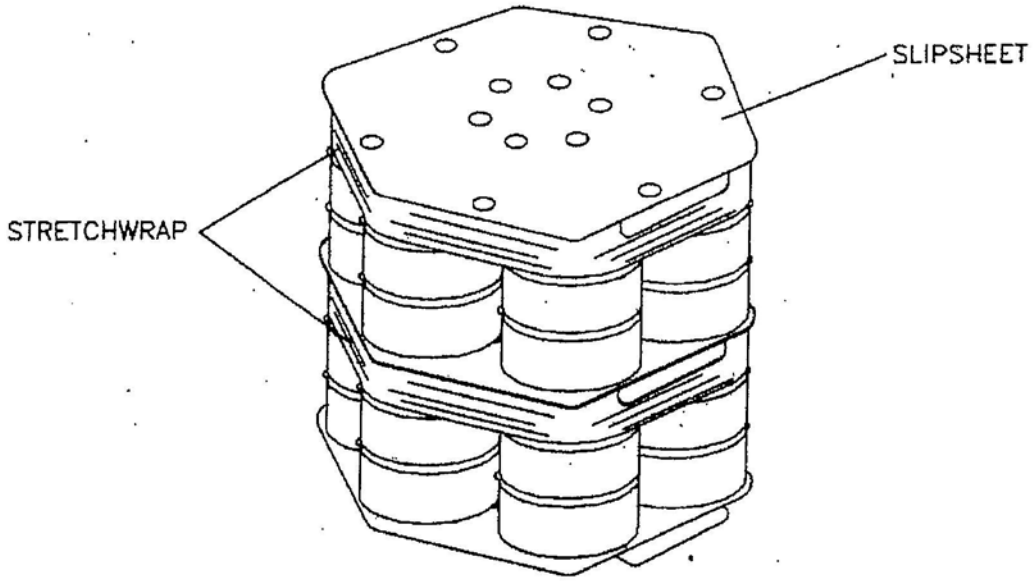

SEVEN–PACKS

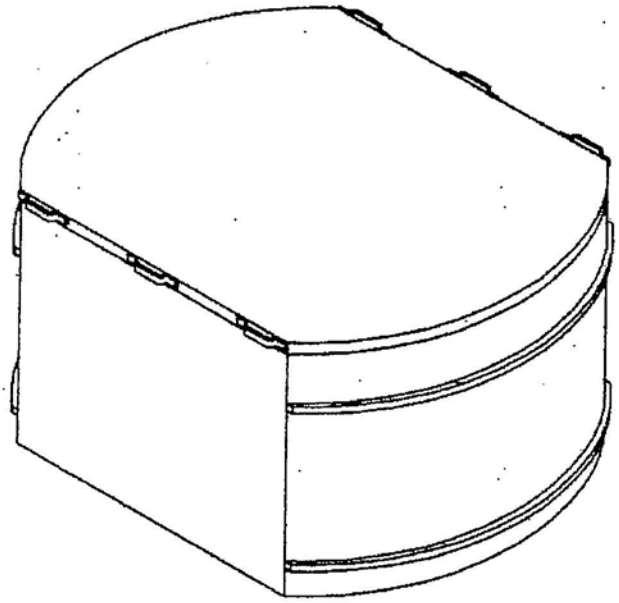

STANDARD WASTE BOX

Figure ~~J~~ H1-2
Standard Waste Box and Seven-Pack Configuration

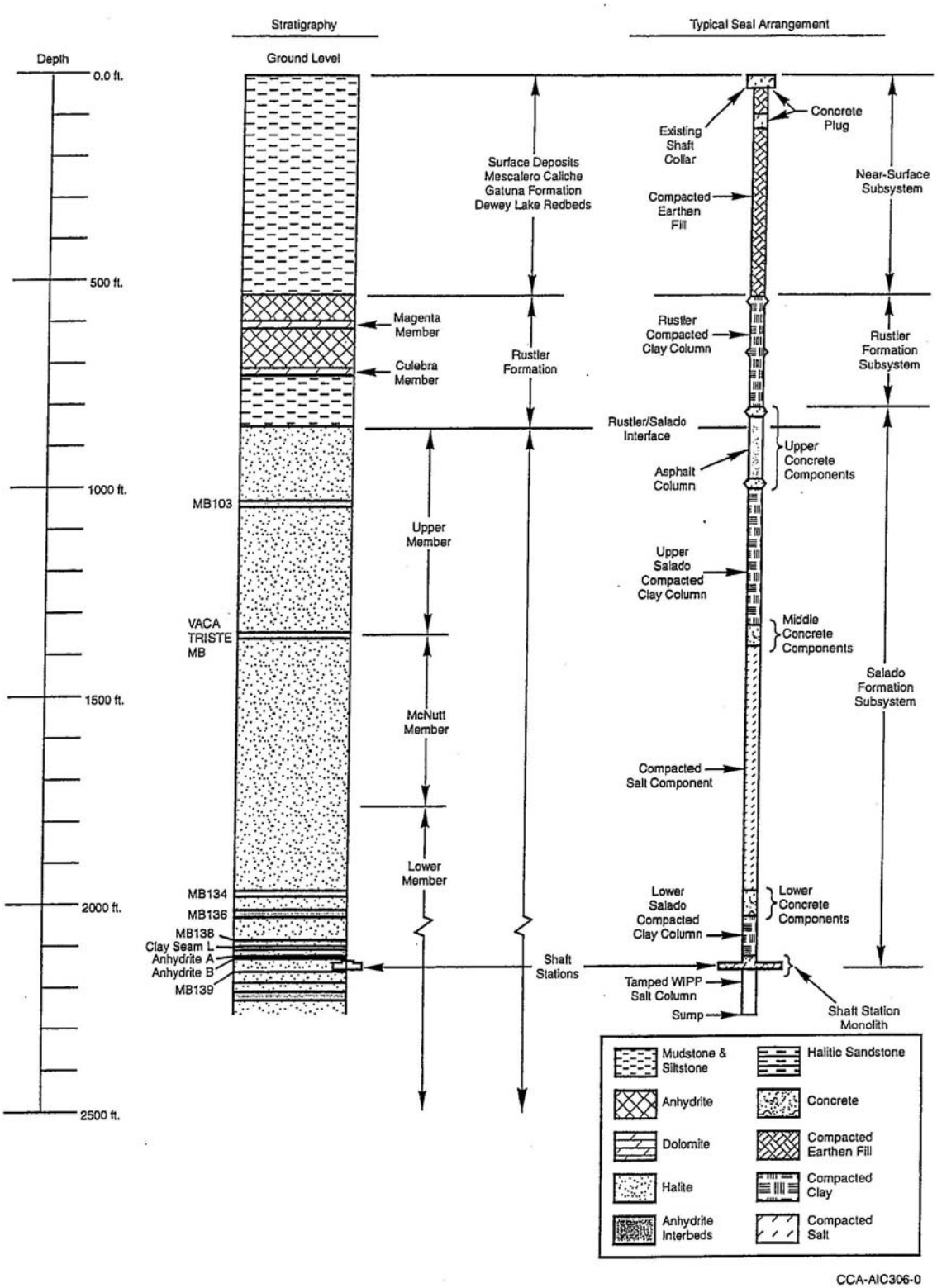

Figure ~~J~~ H1-3
Typical Shaft Sealing System

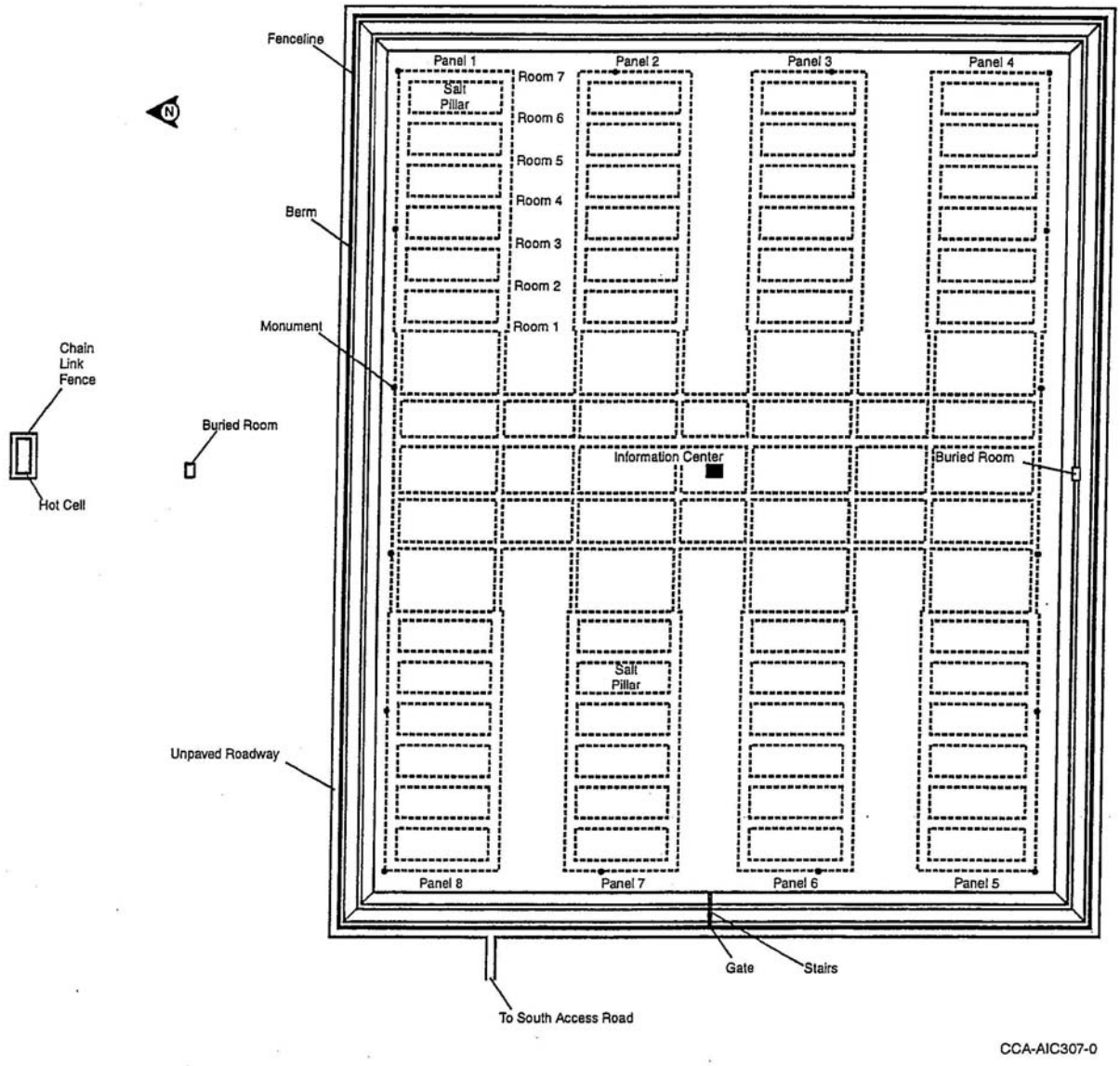

Figure ~~J~~ H1-4
Perimeter Fenceline and Roadway