ATTACHMENT N

VOLATILE ORGANIC COMPOUND MONITORING PLAN

(This page intentionally blank)

ATTACHMENT N

VOLATILE ORGANIC COMPOUND MONITORING PLAN

TABLE OF CONTENTS

N-1 Introduction 1
N-1a Background.... 1
N-1b Objectives of the Volatile Organic Compound Monitoring Plan.... 2

N-2 Target Volatile Organic Compounds....2

N-3 Monitoring Design 2
N-3a Sampling Locations.... 2
N-3a(1) Sampling Locations for Repository VOC Monitoring 2
N-3a(2) Sampling Locations for Disposal Room VOC Monitoring 3
N-3a(3) Ongoing Disposal Room VOC Monitoring in Panels 3 through 8 4
N-3b Analytes to Be Monitored 4
N-3c Sampling and Analysis Methods 4
N-3d Sampling Schedule 5
N-3d(1) Sampling Schedule for Repository VOC Monitoring....5
N-3d(2) Sampling Schedule for Disposal Room VOC Monitoring....5
N-3e Data Evaluation and Reporting 6
N-3e(1) Data Evaluation and Reporting for Repository VOC Monitoring 6
N-3e(2) Data Evaluation and Reporting for Disposal Room VOC Monitoring 7

N-4 Sampling and Analysis Procedures 8
N-4a Sampling Equipment.... 8
N-4a(1) SUMMA® Canisters 8
N-4a(2) Volatile Organic Compound Canister Samplers....8
N-4a(3) Sample Tubing 8
N-4b Sample Collection.... 9
N-4c Sample Management.... 9
N-4d Sampler Maintenance 10
N-4e Analytical Procedures 10

N-5 Quality Assurance 11
N-5a Quality Assurance Objectives for the Measurement of Precision, Accuracy, Sensitivity, and Completeness 11
N-5a(1) Evaluation of Laboratory Precision 12
N-5a(2) Evaluation of Field Precision 12
N-5a(3) Evaluation of Laboratory Accuracy 12
N-5a(4) Evaluation of Sensitivity....13
N-5a(5) Completeness 13
N-5b Sample Handling and Custody Procedures....13
N-5c Calibration Procedures and Frequency....13
N-5d Data Reduction, Validation, and Reporting 13
N-5e Performance and System Audits....14
N-5f Preventive Maintenance....14
N-5g Corrective Actions....14

N-5h Records Management 15
N-6 Sampling and Analysis Procedures for Disposal Room VOC Monitoring in Filled Panels 15
N-7 References 16

LIST OF TABLES

Table	Title
Table N-1	Target Analytes and Methods for Repository VOC (Station VOC-A and VOC-B) Monitoring and Disposal Room Monitoring
Table N-2	Quality Assurance Objectives for Accuracy, Precision, Sensitivity, and Completeness

LIST OF FIGURES

Figure	Title
Figure N-1	Panel Area Flow
Figure N-2	VOC Monitoring System Design
Figure N-3	Disposal Room VOC Monitoring
Figure N-4	VOC Sample Head Arrangement

ACRONYMS AND ABBREVIATIONS

BS/BSD	blank spike/blank spike duplicate
CH	Contact-handled
CLP	Contract Laboratory Program
COC	concentration of concern
CRQL	contract-required quantitation limit
DOE	U.S. Department of Energy
EPA	U.S. Environmental Protection Agency
ft	feet
GC/MS	gas chromatography/mass spectrometry
HWDU	Hazardous Waste Disposal Unit
LCS	laboratory control sample
m	meter
MDL	method detection limit
MOC	Management and Operating Contractor (Permit Section 1.5.3)
MRL	method reporting limit
NIST	National Institute of Standards and Testing
ppbv	parts per billion by volume
QA	quality assurance
QAPD	Quality Assurance Program Description
QC	quality control
RCRA	Resource Conservation and Recovery Act
RPD	relative percent difference
SOP	standard operating procedure
TIC	tentatively identified compound
TRU	Transuranic
VOC	volatile organic compound
WIPP	Waste Isolation Pilot Plant

ATTACHMENT N

VOLATILE ORGANIC COMPOUND MONITORING PLAN

N-1 Introduction

This Permit Attachment describes the monitoring plan for volatile organic compound (**VOC**) emissions from mixed waste that may be entrained in the exhaust air from the U.S. Department of Energy (**DOE**) Waste Isolation Pilot Plant (**WIPP**) Underground Hazardous Waste Disposal Units (**HWDUs**) during the disposal phase at the facility. The purpose of VOC monitoring is to ensure compliance with the VOC limits specified in Permit Part 4. This VOC monitoring plan consists of two programs as follows; (1) Repository VOC Monitoring, which assesses compliance with the environmental performance standards in Table 4.6.2.3; and (2) Disposal Room VOC Monitoring, which assesses compliance with the disposal room performance standards in Table 4.6.3.2. This plan includes the monitoring design, a description of sampling and analysis procedures, quality assurance (**QA**) objectives, and reporting activities.

N-1a Background

The Underground HWDUs are located 2,150 feet (ft) (655 meters [m]) below ground surface, in the WIPP underground. As defined for this Permit, an Underground HWDU is a single excavated panel consisting of seven rooms and two access drifts designated for disposal of contact-handled (**CH**) and remote-handled (**RH**) transuranic (**TRU**) mixed waste. Each room is approximately 300 ft (91 m) long, 33 ft (10 m) wide, and 13 ft (4 m) high. Access drifts connect the rooms and have the same cross section. The Permittees shall dispose of TRU mixed waste in Underground HWDUs designated as Panels 1 through 8.

This plan addresses the following elements:

1. Rationale for the design of the VOC monitoring programs, based on:
    - Possible pathways from WIPP during the active life of the facility
    - Demonstrating compliance with the disposal room performance standards by monitoring VOCs in underground disposal rooms
    - VOC sampling operations at WIPP
    - Optimum location of the ambient mine air monitoring stations
2. Descriptions of the specific elements of the VOC monitoring programs, including:
    - The type of monitoring conducted
    - The location of the monitoring stations
    - The monitoring interval
    - The specific hazardous constituents monitored
    - The implementation schedule for the VOC monitoring programs
    - The equipment used at the monitoring stations
    - Sampling and analytical techniques used

- Data recording/reporting procedures
- Action levels for remedial action if limits are approached

The technical basis for Disposal Room VOC Monitoring is discussed in detail in the Technical Evaluation Report for Room-Based VOC Monitoring (WRES, 2003).

N-1b Objectives of the Volatile Organic Compound Monitoring Plan

The CH and RH TRU mixed waste disposed in the WIPP Underground HWDUs contain VOCs which could be released from WIPP during the disposal phase of the project. This plan describes how:

- VOCs released from waste panels will be monitored to confirm that the annual average concentration of VOCs in the air emissions from the Underground HWDUs do not exceed the VOC concentrations of concern (**COC**) identified in Permit Part 4, Table 4.6.2.3. Appropriate remedial action, as specified in Permit Section 4.6.2.4, will be taken if the limits in Permit Part 4, Table 4.6.2.3 are reached.

- VOCs released from waste containers in disposal rooms will be monitored to confirm that the concentration of VOCs in the air of closed and active rooms in active panels do not exceed the VOC disposal room limits identified in Permit Part 4, Table 4.4.1. Appropriate remedial action, as specified in Permit Section 4.6.3.3, will be taken if the Action Levels in Permit Part 4, Table 4.6.3.2 are reached.

N-2 Target Volatile Organic Compounds

The target VOCs for repository monitoring (Station VOC-A and VOC-B) and disposal room monitoring are presented in Table N-1.

These target VOCs were selected because together they represent approximately 99 percent of the risk due to air emissions.

N-3 Monitoring Design

Detailed design features of this plan are presented in this section. This plan uses available sampling and analysis techniques to measure VOC concentrations in air. Sampling equipment includes the WIPP VOC canister samplers used in both the Repository and Disposal Room VOC Monitoring Programs.

N-3a Sampling Locations

Air samples will be collected in the underground to quantify airborne VOC concentrations as described in the following sections.

N-3a(1) Sampling Locations for Repository VOC Monitoring

The initial configuration for the repository VOC monitoring stations is shown in Figure N-1. All mine ventilation air which could potentially be impacted by VOC emissions from the Underground HWDUs identified as Panels 1 through 8 will pass monitoring Station VOC-A, located in the E-300 drift as it flows to the exhaust shaft. Air samples will be collected at two

locations in the facility to quantify airborne VOC concentrations. VOC concentrations attributable to VOC emissions from open and closed panels containing TRU mixed waste will be measured by placing one VOC monitoring station just downstream from Panel 1 at VOC-A. The location of Station VOC-A will remain the same throughout the term of this Permit. The second station (Station VOC-B) will always be located upstream from the open panel being filled with waste (starting with Panel 1 at monitoring Station VOC-B (Figure N-1). In this configuration, Station VOC-B will measure VOC concentrations attributable to releases from the upstream sources and other background sources of VOCs, but not releases attributable to open or closed panels. The location of Station VOC-B will change when disposal activities begin in the next panel. Station VOC-B will be relocated to ensure that it is always upstream of the open panel that is receiving TRU mixed waste. Station VOC-A will also measure upstream VOC concentrations measured at Station VOC-B, plus any additional VOC concentrations resulting from releases from the closed and open panels. A sample will be collected from each monitoring station on designated sample days. For each quantified target VOC, the concentration measured at Station VOC-B will be subtracted from the concentration measured at Station VOC-A to assess the magnitude of VOC releases from closed and open panels.

The sampling locations were selected based on operational considerations. There are several different potential sources of release for VOCs into the WIPP mine ventilation air. These sources include incoming air from above ground and facility support operations, as well as open and closed waste panels. In addition, because of the ventilation requirements of the underground facility and atmospheric dispersion characteristics, any VOCs that are released from open or closed panels may be difficult to detect and differentiate from other sources of VOCs at any underground or above ground location further downstream of Panel 1. By measuring VOC concentrations close to the potential source of release (i.e., at Station VOC-A), it will be possible to differentiate potential releases from background levels (measured at Station VOC-B).

N-3a(2) Sampling Locations for Disposal Room VOC Monitoring

For purposes of compliance with Section 310 of Public Law 108-447, the VOC monitoring of airborne VOCs in underground disposal rooms in which waste has been emplaced will be performed as follows:

1. A sample head will be installed inside the disposal room behind the exhaust drift bulkhead and at the inlet side of the disposal room.

2. TRU mixed waste will be emplaced in the active disposal room.

3. When the active disposal room is filled, another sample head will be installed to the inlet of the filled active disposal room. (Figure N-3 and N-4)

4. The exhaust drift bulkhead will be removed and re-installed in the next disposal room so disposal activities may proceed.

5. A ventilation barrier will be installed where the bulkhead was located in the active disposal room's exhaust drift. Another ventilation barrier will be installed in the active disposal room's air inlet drift, thereby closing that active disposal room.

6. Monitoring of VOCs will continue in the now closed disposal room. Monitoring of VOCs will occur in the active disposal room and all closed disposal rooms in which waste has been emplaced until commencement of panel closure activities (i.e., completion of ventilation barriers in Room 1).

This sequence for installing sample locations will proceed in the remaining disposal rooms until the inlet air ventilation barrier is installed in Room 1. An inlet sampler will not be installed in Room 1 because disposal room sampling proceeds to the next panel.

N-3a(3) Ongoing Disposal Room VOC Monitoring in Panels 3 through 8

The Permittees shall continue VOC monitoring in Room 1 of Panels 3 through 8 after completion of waste emplacement until final panel closure unless an explosion-isolation wall is installed in the panel.

N-3b Analytes to Be Monitored

The nine VOCs that have been identified for repository and disposal room monitoring are listed in Table N-1. The analysis will focus on routine detection and quantification of these compounds in collected samples. As part of the analytical evaluations, the presence of other compounds will be investigated. The analytical laboratory will be directed to classify and report all of these compounds as Tentatively Identified Compounds (**TICs**).

TICs detected in 10% or more of any VOC monitoring samples (exclusive of those collected from Station VOC-B) that are VOCs listed in Appendix VIII of 20.4.1.200 NMAC (incorporating 40 CFR §261), collected over a running 12-month timeframe, will be added to the target analyte lists for both the repository and disposal room VOC monitoring programs, unless the Permittees can justify the exclusion from the target analyte list(s).

TICs detected in the repository and disposal room VOC monitoring programs will be placed in the WIPP Operating Record and reported to NMED in the Semi-Annual VOC Monitoring Report as specified in Permit Section 4.6.2.2.

N-3c Sampling and Analysis Methods

The VOC monitoring programs include a comprehensive VOC monitoring program established at the facility; equipment, training, and documentation for VOC measurements are already in place.

The method used for VOC sampling is based on the concept of pressurized sample collection contained in the U.S. Environmental Protection Agency (**EPA**) Compendium Method TO-15 (EPA, 1999). The TO-15 sampling concept uses 6-liter SUMMA® passivated (or equivalent) stainless-steel canisters to collect integrated air samples at each sample location. This conceptual method will be used as a reference for collecting the samples at WIPP. The samples will be analyzed using gas chromatography/mass spectrometry (**GC/MS**) under an established QA/quality control (**QC**) program. Laboratory analytical procedures have been developed based on the concepts contained in both TO-15 and 8260B. Section N-5 contains additional QA/QC information for this project.

The TO-15 method is an EPA-recognized sampling concept for VOC sampling and speciation. It can be used to provide integrated samples, or grab samples, and compound quantitation for a broad range of concentrations. The sampling system can be operated unattended but requires detailed operator training. This sampling technique is viable for use while analyzing the sample using other EPA methods such as 8260B.

The field sampling systems will be operated in the pressurized mode. In this mode, air is drawn through the inlet and sampling system with a pump. The air is pumped into an initially evacuated SUMMA® passivated (or equivalent) canister by the sampler, which regulates the rate and duration of sampling. The treatment of tubing and canisters used for VOC sampling effectively seals the inner walls and prevents compounds from being retained on the surfaces of the equipment. By the end of each sampling period, the canisters will be pressurized to about two atmospheres absolute. In the event of shortened sampling periods or other sampling conditions, the final pressure in the canister may be less than two atmospheres absolute. Sampling duration will be approximately six hours, so that a complete sample can be collected during a single work shift.

The canister sampling system and GC/MS analytical method are particularly appropriate for the VOC Monitoring Programs because a relatively large sample volume is collected, and multiple dilutions and reanalyses can occur to ensure identification and quantification of target VOCs within the working range of the method. The contract-required quantitation limits (**CRQL**) are 5 parts per billion by volume (**ppbv**) or less for the nine target compounds. Consequently, low concentrations can be measured. CRQLs are the EPA-specified levels of quantitation proposed for EPA contract laboratories that analyze canister samples by GC/MS. For the purpose of this plan, the CRQLs will be defined as the method reporting limits (**MRL**). The MRL is a function of instrument performance, sample preparation, sample dilution, and all steps involved in the sample analysis process.

Disposal room VOC monitoring system in open panels will employ the same canister sampling method as used in the repository VOC monitoring. Passivated or equivalent sampling lines will be installed in the disposal room as described in Section N-3a(2) and maintained once the room is closed until the panel associated with the room is closed. The independent lines will run from the sample inlet point to the individual sampler located in the access drift to the disposal panel. The air will pass through dual particulate filters to prevent sample and equipment contamination.

N-3d Sampling Schedule

The Permittees will evaluate whether the monitoring systems and analytical methods are functioning properly. The assessment period will be determined by the Permittees.

N-3d(1) Sampling Schedule for Repository VOC Monitoring

Repository VOC sampling at Stations VOC-A and VOC-B will begin with initial waste emplacement in Panel 1. Sampling will continue until the certified closure of the last Underground HWDU. Routine sampling will be conducted two times per week.

N-3d(2) Sampling Schedule for Disposal Room VOC Monitoring

The disposal room sampling in open panels will occur once every two weeks, unless the need to increase the frequency to weekly occurs in accordance with Permit Section 4.6.3.3.

Beginning with Panel 3, disposal room sampling in filled panels will occur monthly until final panel closure unless an explosion-isolation wall is installed. The Permittees will sample VOCs in Room 1 of each filled panel.

N-3e Data Evaluation and Reporting

N-3e(1) Data Evaluation and Reporting for Repository VOC Monitoring

When the Permittees receive laboratory analytical data from an air sampling event, the data will be validated as specified in Section N-5d. After obtaining validated data from an air sampling event, the data will be evaluated to determine whether the VOC emissions from the Underground HWDUs exceed the COCs. The COCs for each of the nine target VOCs are presented in Permit Part 4, Table 4.6.2.3. The values are presented in terms of micrograms per cubic meter (µg/m^3) and ppbv.

The COCs were calculated assuming typical operational conditions for ventilation rates in the mine. The typical operational conditions were assumed to be an overall mine ventilation rate of 425,000 standard cubic feet per minute and a flow rate through the E-300 Drift at Station VOC-A of 130,000 standard cubic feet per minute.

Since the mine ventilation rates at the time the air samples are collected may be different than the mine ventilation rates during typical operational conditions, the Permittees will measure and/or record the overall mine ventilation rate and the ventilation rate in the E-300 Drift at Station VOC-A that are in use during each sampling event. The Permittees shall also measure and record temperature and pressure conditions during the sampling event to allow all ventilation rates to be converted to standard flow rates.

If the air samples were collected under the typical mine ventilation rate conditions, then the analytical data will be used without further manipulation. The concentration of each target VOC detected at Station VOC-B will be subtracted from the concentration detected at Station VOC-A. The resulting VOC concentration represents the concentration of VOCs being emitted from the open and closed Underground HWDUs upstream of Station VOC-A (or the Underground HWDU VOC emission concentration).

If the air samples were not collected under typical mine ventilation rate operating conditions, the air monitoring analytical results from both Station VOC-A and Station VOC-B will be normalized to the typical operating conditions. This will be accomplished using the mine ventilation rates in use during the sampling event and the following equation:

$$NVOC_{AB} = VOC_{AB} * \left(\frac{425{,}000_{scfm} / 130{,}000_{scfm}}{V_{O\ scfm} / V_{E-300\ scfm}} \right) \qquad \text{(N-1)}$$

Where: $NVOC_{AB}$ = Normalized target VOC concentration from Stations VOC-A or VOC-B

VOC_{AB} = Concentration of the target VOC detected at Station VOC-A or VOC-B under non-typical mine ventilation rates

scfm	=	Standard cubic feet per minute
Vo	=	Sampling event overall mine ventilation rate (in standard cubic feet per minute)
VE-300	=	Sampling event mine ventilation rate through the E-300 Drift (in standard cubic feet per minute)

The normalized concentration of each target VOC detected at Station VOC-B will be subtracted from the normalized concentration detected at Station VOC-A. The resulting concentration represents the Underground HWDU VOC emission concentration.

The Underground HWDU VOC emission concentration for each target VOC that is calculated for each sampling event will be compared directly to its COC listed in Permit Part 4, Table 4.6.2.3. This will establish whether any of the concentrations of VOCs in the emissions from the Underground HWDUs exceeded the COCs at the time of the sampling.

As specified in Permit Part 4, the Permittees shall notify the Secretary in writing, within seven calendar days of obtaining validated analytical results, whenever the concentrations of any target VOC listed in exceeds the concentration of concern specified in Permit Part 4, Table 4.6.2.3.

The Underground HWDU VOC emission concentration for each target VOC that is calculated for each sampling event will then be averaged with the Underground HWDU VOC emission concentrations calculated for the air sampling events conducted during the previous 12 months. This will be considered the running annual average concentration for each target VOC. For the first year of air sampling, the running annual average concentration for each target VOC will be calculated using all of the previously collected data.

As specified in Permit Part 4, the Permittees shall notify the Secretary in writing, within seven calendar days of obtaining validated analytical results, whenever the running annual average concentration (calculated after each sampling event) for any target VOC exceeds the concentration of concern specified in Permit Part 4, Table 4.6.2.3.

If the results obtained from an individual air sampling event do not trigger the notification requirements of Permit Part 4, then the Permittees will maintain a database with the VOC air sampling data and the results will be reported to the Secretary as specified in Permit Part 4.

N-3e(2) Data Evaluation and Reporting for Disposal Room VOC Monitoring

When the Permittees receive laboratory analytical data from an air sampling event, the data will be validated as specified in Section N-5a, within 14 calendar days of receiving the laboratory analytical data. After obtaining validated data from an air sampling event, the data will be evaluated to determine whether the VOC concentrations in the air of any closed room, the active open room, or the immediately adjacent closed room exceeded the Action Levels for Disposal Room Monitoring specified in Permit Part 4, Table 4.6.3.2.

The Permittees shall notify the Secretary in writing, within seven calendar days of obtaining validated analytical results, whenever the concentration of any VOC specified in Permit Part 4, Table 4.4.1 exceeds the action levels specified in Permit Part 4, Table 4.6.3.2.

The Permittees shall submit to the Secretary the Semi-Annual VOC Monitoring Report specified in Permit Section 4.6.2.2 that also includes results from disposal room VOC monitoring.

N-4 Sampling and Analysis Procedures

This section describes the equipment and procedures that will be implemented during sample collection and analysis activities for VOCs at WIPP.

N-4a Sampling Equipment

The sampling equipment that will be used includes the following: 6-liter (L) stainless-steel SUMMA® canisters, VOC canister samplers, treated stainless steel tubing, and a dual filter housing. A discussion of each of these items is presented below.

N-4a(1) SUMMA® Canisters

Six-liter, stainless-steel canisters with SUMMA® passivated interior surfaces will be used to collect and store all ambient air and gas samples for VOC analyses collected as part of the monitoring processes. These canisters will be cleaned and certified prior to their use, in a manner similar to that described by Compendium Method TO-15. The canisters will be certified clean to below the required reporting limits for the VOC analytical method for the target VOCs (see Table N-2). The vacuum of certified clean samplers will be verified at the sampler upon initiation of a sample cycle.

N-4a(2) Volatile Organic Compound Canister Samplers

A conceptual diagram of a VOC sample collection unit is provided in Figure N-2. Such units will be used at monitoring Stations VOC-A and VOC-B and at sampling locations for disposal room measurements. The sampling unit consists of a sample pump, flow controller, sample inlet, inlet filters in series to remove particulate matter, vacuum/pressure gauge, electronic timer, inlet purge vent, two sampling ports, and sufficient collection canisters so that any delays attributed to laboratory turnaround time and canister cleaning and certification will not result in canister shortages. Knowledge of sampler flow rates and duration of sampling will allow calculation of sample volume. The set point flow rate will be verified before and after sample collection from the mass flow indication. Prior to their initial use and annually thereafter, the sample collection units will be tested and certified to demonstrate that they are free of contamination above the reporting limits of the VOC analytical method (see Section N-5). Ultra-high purity humidified zero air will be pumped through the inlet line and sampling unit and collected in previously certified canisters as sampler blanks for analysis. The cleaning and certification procedure is derived from concepts contained in the EPA Compendium Method TO-15 (EPA, 1999).

N-4a(3) Sample Tubing

Treated stainless steel tubing is used as a sample path, from the desired sample point to the sample collection unit. This tubing is treated to prevent the inner walls from absorbing contaminants when they are pulled from the sample point to the sample collection unit.

N-4b Sample Collection

Six-hour integrated samples will be collected on each sample day. Alternative sampling durations may be defined for experimental purposes. The VOC canister sampler at each location will sample ambient air on the same programmed schedule. The sample pump will be programmed to sample continuously over a six-hour period during the workday. The units will sample at a nominal flow rate of 33.3 actual milliliters per minute over a six-hour sample period. This schedule will yield a final sample volume of approximately 12 L. Flow rates and sampling duration may be modified as necessary for experimental purposes and to meet the data quality objectives.

Sample flow will be checked each sample day using an in-line mass flow controller. The flow controllers are initially factory-calibrated and specify a typical accuracy of better than 10 percent full scale. Additionally, each air flow controller is calibrated at a manufacturer-specified frequency using a National Institute of Standards and Testing (**NIST**) primary flow standard.

Upon initiation of waste disposal activities in Panel 1, samples will be collected twice each week (at Stations VOC-A and VOC-B). Samples collected at the panel locations should represent the same matrix type (i.e., elevated levels of salt aerosols). To verify the matrix similarity and assess field sampling precision, field duplicate samples will be collected (two canisters filled simultaneously by the same sampler) from each sampling station (Stations VOC-A and VOC-B) during the first sampling event and at an overall frequency of 5 percent thereafter (see Section N-5a).

Prior to collecting the active open disposal room and closed room samples, the sample lines are purged to ensure that the air collected is not air that has been stagnant in the tubing. This is important in regard to the disposal room sample particularly because of the long lengths of tubing associated with these samples. The repository samples do not require this action due to the short lengths of tubing required at these locations.

N-4c Sample Management

Field sampling data sheets will be used to document the sampler conditions under which each sample is collected. These data sheets have been developed specifically for VOC monitoring at the WIPP facility. The individuals assigned to collect the specific samples will be required to fill in all of the appropriate sample data and to maintain this record in sample logbooks. The program team leader will review these forms for each sampling event.

All sample containers will be marked with identification at the time of collection of the sample. A Request-for-Analysis Form will be completed to identify the sample canister number(s), sample type and type of analysis requested.

All samples will be maintained, and shipped if necessary, at ambient temperatures. Collected samples will be transported in appropriate containers. Prior to leaving the underground for analysis, sample containers may undergo radiological screening. No potentially contaminated samples or equipment will be transported to the surface. No samples will be accepted by the receiving laboratory personnel unless they are properly labeled and sealed to ensure a tamper free shipment.

An important component of the sampling program is a demonstration that collected samples were obtained from the locations stated and that they reached the laboratory without alteration. To satisfy this requirement, evidence of collection, shipment, laboratory receipt, and custody will be documented with a completed Chain-of-Custody Form. Chain-of-custody procedures will be followed closely, and additional requirements imposed by the laboratory for sample analysis will be included as necessary.

Individuals collecting samples will be responsible for the initiation of custody procedures. The chain of custody will include documentation as to the canister certification, location of sampling event, time, date, and individual handling the samples. Deviations from procedure will be considered variances. Variances must be preapproved by the program manager and recorded in the project files. Unintentional deviations, sampler malfunctions, and other problems are nonconformances. Nonconformances must be documented and recorded in the project files. All field logbooks/data sheets must be incorporated into WIPP's records management program.

N-4d Sampler Maintenance

Periodic maintenance for canister samplers and associated equipment will be performed during each cleaning cycle. This maintenance will include, but not be limited to, replacement of damaged or malfunctioning parts without compromising the integrity of the sampler, leak testing, and instrument calibration. Additionally, complete spare units will be maintained on-site to minimize downtime because of sampler malfunction. At a minimum, canister samplers will be certified for cleanliness initially and annually thereafter upon initial use, after any parts that are included in the sample flow path are replaced, or any time analytical results indicate potential contamination. All sample canisters will be certified prior to each usage.

N-4e Analytical Procedures

Analytical procedures used in the analysis of VOC samples from canisters are based on concepts contained in Compendium Method TO-15 (EPA, 1999) and in SW-846 Method 8260B (EPA, 1996).

Analysis of samples will be performed by a certified laboratory. Methods will be specified in procurement documents and will be selected to be consistent with Compendium Method TO-15 (EPA, 1999) or EPA recommended procedures in SW-846 (EPA, 1996). Additional detail on analytical techniques and methods will be given in laboratory SOPs.

The Permittees will establish the criteria for laboratory selection, including the stipulation that the laboratory follow the procedures specified in the appropriate Air Compendium or SW-846 method and that the laboratory follow EPA protocols. The selected laboratory shall demonstrate, through laboratory SOPs, that it will follow appropriate EPA SW-846 requirements and the requirements specified by the EPA Air Compendium protocols. The laboratory shall also provide documentation to the Permittees describing the sensitivity of laboratory instrumentation. This documentation will be retained in the facility operating record and will be available for review upon request by NMED.

The SOPs for the laboratory currently under contract will be maintained in the operating record by the Permittees. The Permittees will provide NMED with an initial set of applicable laboratory SOPs for information purposes, and provide NMED with any updated SOPs on an annual basis.

Data validation will be performed by the Permittees. Copies of the data validation report will be kept on file in the operating record for review upon request by NMED.

N-5 Quality Assurance

The QA activities for the VOC monitoring programs will be conducted in accordance with the documents: *EPA Guidance for Quality Assurance Project Plans QA/G-5* (EPA, 2002) and the *EPA Requirements for Preparing Quality Assurance Project Plans, QA/R-5* (EPA, 2001). The QA criteria for the VOC monitoring programs are listed in Table N-2. This section addresses the methods to be used to evaluate the components of the measurement system and how this evaluation will be used to assess data quality. The QA limits for the sampling procedures and laboratory analysis shall be in accordance with the limits set forth in the specific EPA Method referenced in standard operating procedures employed by either the Permittees or the laboratory. The Permittees standard operating procedures will be in the facility Operating Record and available for review by NMED at anytime. The laboratory standard operating procedures will also be in the facility Operating Record and will be supplied to the NMED as indicated in Section N-4e.

N-5a Quality Assurance Objectives for the Measurement of Precision, Accuracy, Sensitivity, and Completeness

QA objectives for this plan will be defined in terms of the following data quality parameters.

Precision. For the duration of this program, precision will be defined and evaluated by the RPD values calculated between field duplicate samples and between laboratory duplicate samples.

$$RPD = \left(\frac{(A - B)}{(A + B)/2} \right) * 100 \qquad \text{(N-2)}$$

where: A = Original sample result

B = Duplicate sample result

Accuracy. Analytical accuracy will be defined and evaluated through the use of analytical standards. Because recovery standards cannot reliably be added to the sampling stream, overall system accuracy will be based on analytical instrument performance evaluation criteria. These criteria will include performance verification for instrument calibrations, laboratory control samples, sample surrogate recoveries (when required by method or laboratory SOPs), and sample internal standard areas. Use of the appropriate criteria as determined by the analytical method performed, will constitute the verification of accuracy for target analyte quantitation (i.e., quantitative accuracy). Evaluation of standard ion abundance criteria for BFB will be used to evaluate the accuracy of the analytical system in the identification of targeted analytes, as well as the evaluation of unknown contaminants (i.e., qualitative accuracy).

Sensitivity. Sensitivity will be defined by the required MRLs for the program. Attainment of required MRLs will be verified by the performance of statistical method detection limit (**MDL**) studies in accordance with 40 *Code of Federal Regulations* § 136. The MDL represents the minimum concentration that can be measured and reported with 99 percent confidence that the

analyte concentration is greater than zero. An MDL study will be performed by the program analytical laboratory prior to sampling and analysis, and annually thereafter.

Completeness. Completeness will be defined as the percentage of the ratio of the number of valid sample results received (i.e., those which meet data quality objectives) versus the total number of samples collected. Completeness may be affected, for example, by sample loss or destruction during shipping, by laboratory sample handling errors, or by rejection of analytical data during data validation.

N-5a(1) Evaluation of Laboratory Precision

Laboratory sample duplicates and blank spike/blank spike duplicates (**BS/BSD**) will be used to evaluate laboratory precision. QA objectives for laboratory precision are listed in Table N-2, and are based on precision criteria proposed by the EPA for canister sampling programs (EPA, 1994). These values will be appropriate for the evaluation of samples with little or no matrix effects. Because of the potentially high level of salt-type aerosols in the WIPP underground environment, the analytical precision achieved for WIPP samples may vary with respect to the EPA criteria. RPDs for BS/BSD analyses will be tracked through the use of control charts. RPDs obtained for laboratory sample duplicates will be compared to those obtained for BS/BSDs to ascertain any sample matrix effects on analytical precision. BS/BSDs and laboratory sample duplicates will be analyzed at a frequency of 10 percent, or one per analytical lot, whichever is more frequent.

N-5a(2) Evaluation of Field Precision

Field duplicate samples will be collected at a frequency of 5 percent for both monitoring locations. The data quality objective for field precision is 35 percent for each set of duplicate samples.

N-5a(3) Evaluation of Laboratory Accuracy

Quantitative analytical accuracy will be evaluated through performance criteria on the basis of (1) relative response factors generated during instrument calibration, (2) analysis of laboratory control samples (**LCS**), and (3) recovery of internal standard compounds. The criteria for the initial calibration (5-point calibration) is $\leq$ 30 percent relative standard deviation for target analytes. After the successful completion of the 5-point calibration, it is sufficient to analyze only a midpoint standard for every 24 hours of operation. The midpoint standard will pass a 30 percent difference acceptance criterion for each target compound before sample analysis may begin.

A blank spike or LCS is an internal QC sample generated by the analytical laboratory by spiking a standard air matrix (humid zero air) with a known amount of a certified reference gas. The reference gas will contain the target VOCs at known concentrations. Percent recoveries for the target VOCs will be calculated for each LCS relative to the reference concentrations. Objectives for percent recovery are listed in Table N-2, and are based on accuracy criteria proposed by the EPA for canister sampling programs (EPA, 1994). LCSs will be analyzed at a frequency of 10 percent, or one per analytical lot, whichever is more frequent.

Internal standards will be introduced into each sample analyzed, and will be monitored as a verification of stable instrument performance. In the absence of any unusual interferences,

areas should not change by more than 40 percent over a 24-hour period. Deviations larger than 40 percent are an indication of a potential instrument malfunction. If an internal standard area in a given sample changes by more than 40 percent, the sample will be reanalyzed. If the 40 percent criterion is not achieved during the reanalysis, the instrument will undergo a performance check and the midpoint standard will be reanalyzed to verify proper operation. Response and recovery of internal standards will also be compared between samples, LCSs, and calibration standards to identify any matrix effects on analytical accuracy.

N-5a(4) Evaluation of Sensitivity

The presence of aerosol salts in underground locations may affect the MDL of the samples collected in those areas. The intake manifold of the sampling systems will be protected sufficiently from the underground environment to minimize salt aerosol interference.

The MDL for each of the nine target compounds will be evaluated by the analytical laboratories before sampling begins. The initial and annual MDL evaluation will be performed in accordance with 40 *Code of Federal Regulations* §136 and with EPA/530-SW-90-021, as revised and retitled, “Quality Assurance and Quality Control” (Chapter 1 of SW-846) (1996).

N-5a(5) Completeness

The expected completeness for this program is greater than or equal to 90 percent. Data completeness will be tracked monthly.

N-5b Sample Handling and Custody Procedures

Sample packaging, shipping, and custody procedures are addressed in Section N-4c.

N-5c Calibration Procedures and Frequency

Calibration procedures and frequencies for analytical instrumentation are listed in Section N-4e.

N-5d Data Reduction, Validation, and Reporting

A dedicated logbook will be maintained by the operators. This logbook will contain documentation of all pertinent data for the sampling. Sample collection conditions, maintenance, and calibration activities will be included in this logbook. Additional data collected by other groups at WIPP, such as ventilation airflow, temperature, pressure, etc., will be obtained to document the sampling conditions.

Data validation procedures will include at a minimum, a check of all field data forms and sampling logbooks will be checked for completeness and correctness. Sample custody and analysis records will be reviewed routinely by the QA officer and the laboratory supervisor.

Electronic Data Deliverables (**EDDs**) are provided by the laboratory prior to receipt of hard copy data packages. EDDs will be evaluated within five calendar days of receipt to determine if VOC concentrations are at or above action levels in Table 4.6.3.2 for disposal room monitoring data or concentrations of concern in Table 4.6.2.3 for repository monitoring data. If the EDD indicates that VOC concentrations are at or above these action levels or concentrations, the hard copy

data package will be validated within five calendar days as opposed to the fourteen (14) calendar day time frame provided by Section N-3e(2).

Data will be reported as specified in Section N-3(e) and Permit Part 4.

Acceptable data for this VOC monitoring plan will meet stated precision and accuracy criteria. The QA objectives for precision, accuracy, and completeness as shown in Table N-2 can be achieved when established methods of analyses are used as proposed in this plan and standard sample matrices are being assessed.

N-5e Performance and System Audits

System audits will initially address start-up functions for each phase of the project. These audits will consist of on-site evaluation of materials and equipment, review of canister and sampler certification, review of laboratory qualification and operation and, at the request of the QA officer, an on-site audit of the laboratory facilities. The function of the system audit is to verify that the requirements in this plan have been met prior to initiating the program. System audits will be performed at or shortly after to the initiation of the VOC monitoring programs and on an annual basis thereafter.

Performance audits will be accomplished as necessary through the evaluation of analytical QC data by performing periodic site audits throughout the duration of the project, and through the introduction of third-party audit cylinders (laboratory blinds) into the analytical sampling stream. Performance audits will also include a surveillance/review of data associated with canister and sampler certification, a project-specific technical audit of field operations, and a laboratory performance audit. Field logs, logbooks, and data sheets will be reviewed weekly. Blind-audit canisters will be introduced once during the sampling period. Details concerning scheduling, personnel, and data quality evaluation are addressed in the QAPjP.

N-5f Preventive Maintenance

Sampler maintenance is described briefly in Section N-4d Maintenance of analytical equipment will be addressed in the analytical SOP.

N-5g Corrective Actions

If the required completeness of valid data (95 percent) is not maintained, corrective action may be required. Corrective action for field sampling activities may include recertification and cleaning of samplers, reanalysis of samples, additional training of personnel, modification to field and laboratory procedures, and recalibration of test equipment.

Laboratory corrective actions may be required to maintain data quality. The laboratory continuing calibration criteria indicate the relative response factor for the midpoint standard will be less than 30 percent different from the mean relative response factor for the initial calibration. Differences greater than 30 percent will require recalibration of the instrument before samples can be analyzed. If the internal standard areas in a sample change by more than 40 percent, the sample will be reanalyzed. If the 40 percent criterion is not achieved during the reanalysis, the instrument will undergo a performance check and the midpoint standard reanalyzed to verify proper operation. Deviations larger than 40 percent are an indication of potential instrument malfunction.

The laboratory results for samples, duplicate analyses, LCSs, and blanks should routinely be within the QC limits. If results exceed control limits, the reason for the nonconformances and appropriate corrective action must be identified and implemented.

N-5h Records Management

The VOC Monitoring Programs will require administration of record files (both laboratory and field data collection files). The records control systems will provide adequate control and retention for program-related information. Records administration, including QA records, will be conducted in accordance with applicable DOE, MOC, and WIPP requirements.

Unless otherwise specified, VOC monitoring plan records will be retained as lifetime records. Temporary and permanent storage of QA records will occur in facilities that prevent damage from temperature, fire, moisture, pressure, excessive light, and electromagnetic fields. Access to stored VOC Monitoring Program QA Records will be controlled and documented to prevent unauthorized use or alteration of completed records.

Revisions to completed records (i.e., as a result of audits or data validation procedures) may be made only with the approval of the responsible program manager and in accordance with applicable QA procedures. Original and duplicate or backup records of project activities will be maintained at the WIPP site. Documentation will be available for inspection by internal and external auditors.

N-6 Sampling and Analysis Procedures for Disposal Room VOC Monitoring in Filled Panels

Disposal room VOC samples in filled panels will be collected using the subatmospheric pressure grab sampling technique described in Compendium Method TO-15 (EPA, 1999). This method uses an evacuated SUMMA® passivated canister (or equivalent) that is under vacuum (0.05 mm Hg) to draw the air sample from the sample lines into the canister. The sample lines will be purged prior to sampling to ensure that a representative sample is collected. The passivation of tubing and canisters used for VOC sampling effectively seals the inner walls and prevents compounds from being retained on the surfaces of the equipment. By the end of each sampling period, the canisters will be near atmospheric pressure.

The analytical procedures for disposal room VOC monitoring in filled panels are the same as specified in Section N-4e.

N-7 References

U.S. Environmental Protection Agency. 1996. SW-846, *Test Methods for Evaluating Solid Waste, Physical/Chemical Methods*. 3rd Edition. Office of Solid Waste and Emergency Response, Washington, D.C.

U.S. Environmental Protection Agency. 1999 *Compendium Method TO-15: Determination of Volatile Organic Compounds (VOCs) In Air Collected in Specially Prepared Canisters and Analyzed by Gas Chromatography/Mas Spectrometry*, EPA 625/R-96/010b. Center for Environmental Research Information, Office of Research and Development, Cincinnati, OH, January 1999.

U.S. Environmental Protection Agency. 2000. *Guidance for the Data Quality Objectives Process*, QA/G-4. EPA 600/R-96/055, August 2000, Washington, D.C.

U.S. Environmental Protection Agency. 2001. *EPA Guidance for Quality Assurance Project Plans, QA/G*, EPA 240/B-01/003, March 2001, Washington, D.C.

U.S. Environmental Protection Agency. 2002. *EPA Requirements for Preparing Quality Assurance Project Plans*, QA/R-5, EPA 240/R-01/009, December 2002, Washington, D.C.

Washington Regulatory and Environmental Services, 2004. *Technical Evaluation Report for WIPP Room-Based VOC Monitoring*.

TABLES

(This page intentionally blank)

Table N-1
Target Analytes and Methods for Repository VOC (Station VOC-A and VOC-B) Monitoring and Disposal Room Monitoring

Target Analyte	EPA Standard Analytical Method
Carbon tetrachloride	EPA TO-15[a] EPA 8260B[b]
Chlorobenzene	
Chloroform	
1,1-Dichloroethylene	
1,2-Dichloroethane	
Methylene chloride	
1,1,2,2 -Tetrachloroethane	
Toluene	
1,1,1- Trichloroethane	

[a] U.S. Environmental Protection Agency, 1999, Compendium of Methods for the Determination of Toxic Organic Compounds in Ambient Air- Second Edition, http://www.epa.gov/ttn/amtic/airtox.html

[b] U.S. Environmental Protection Agency, SW-846 Test Methods for Evaluation Solid Wastes, Chemical and Physical Methods, http://www.epa.gov/epaoswer/hazwaste/test/main.htm

Table N-2
Quality Assurance Objectives for Accuracy, Precision, Sensitivity, and Completeness

Compound	Accuracy (Percent Recovery)	Precision (RPD) Laboratory	Precision (RPD) Field	Required MRL (ppbv)	Completeness (Percent)
Carbon tetrachloride	60 to 140	25	35	2	95
Chlorobenzene	60 to 140	25	35	2	95
Chloroform	60 to 140	25	35	2	95
1,1-Dichloroethylene	60 to 140	25	35	5	95
1,2-Dichloroethane	60 to 140	25	35	2	95
Methylene chloride	60 to 140	25	35	5	95
1,1,2,2-Tetrachloroethane	60 to 140	25	35	2	95
Toluene	60 to 140	25	35	5	95
1,1,1-Trichloroethane	60 to 140	25	35	5	95

MRL method reporting limit
RPD relative percent difference

FIGURES

(This page intentionally blank)

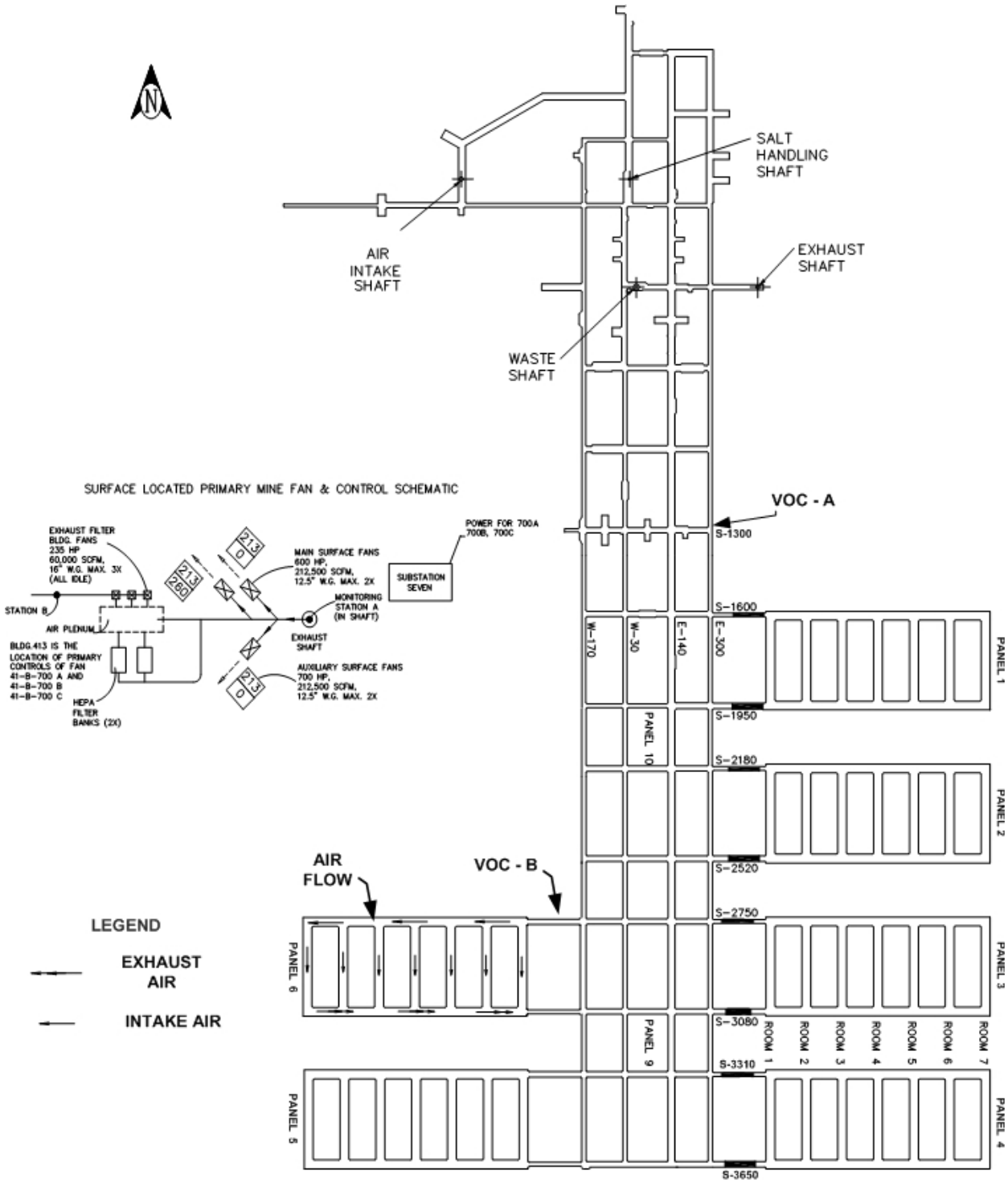

Figure N-1
Panel Area Flow

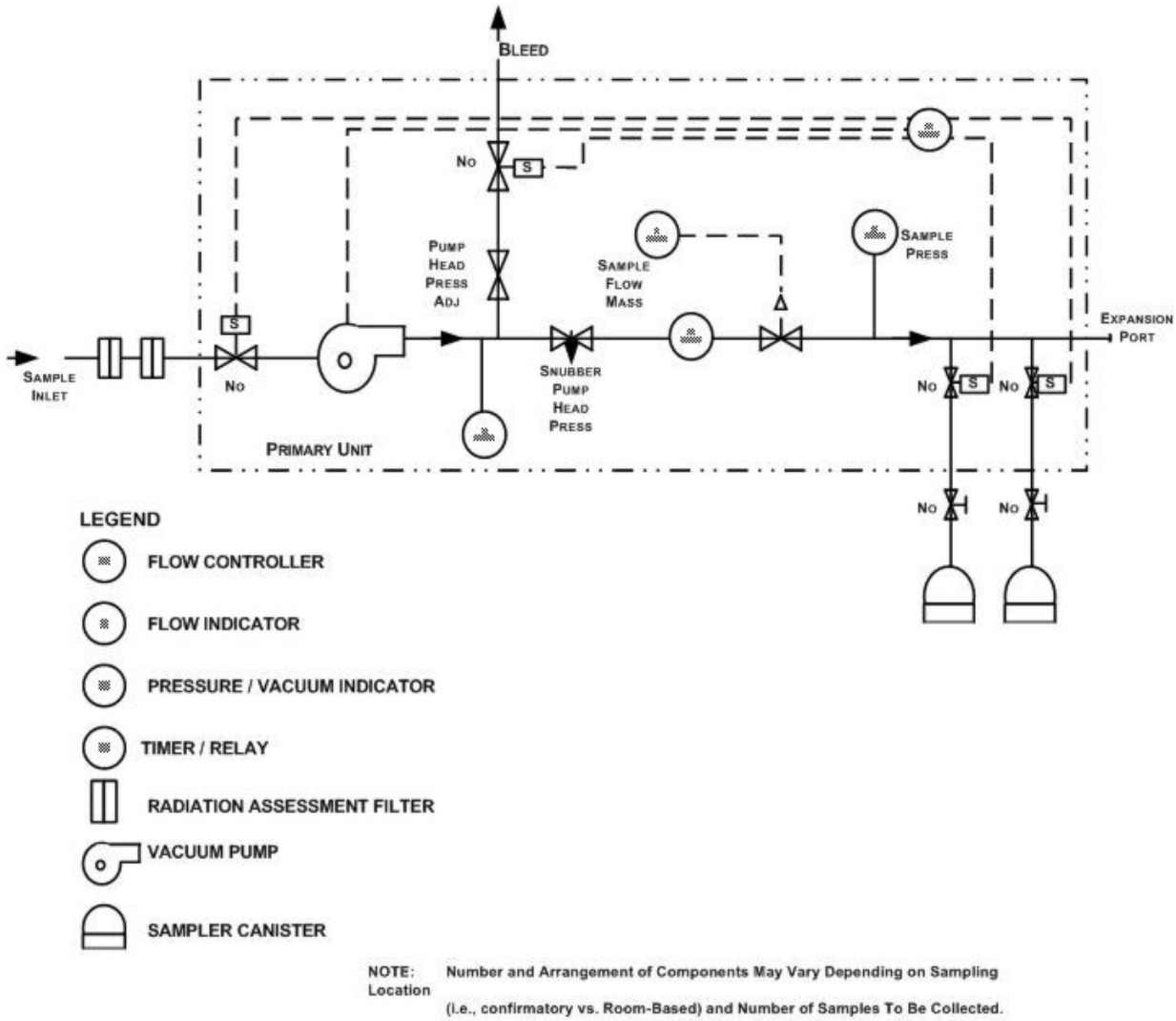

Figure N-2
VOC Monitoring System Design

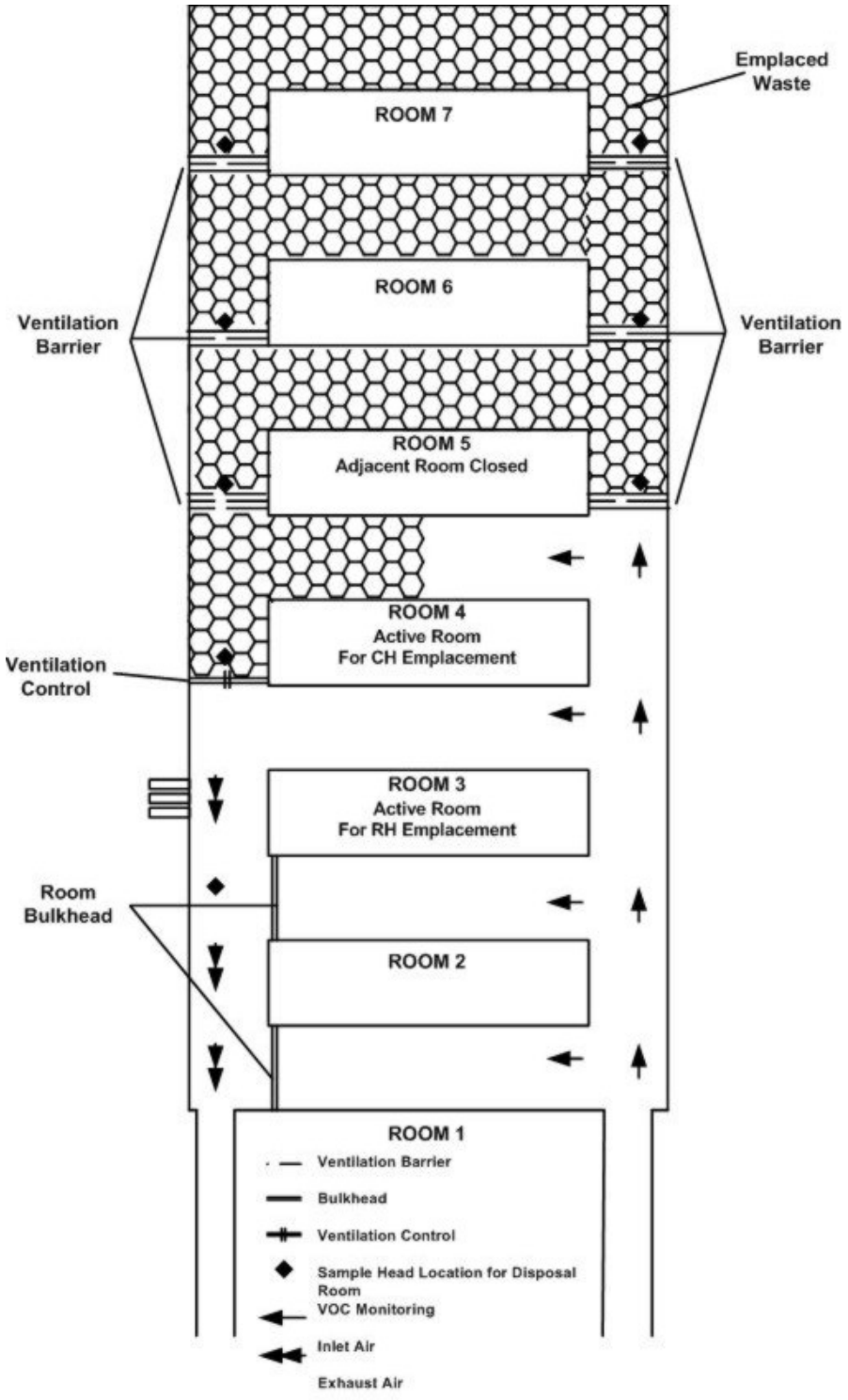

Figure N-3
Disposal Room VOC Monitoring

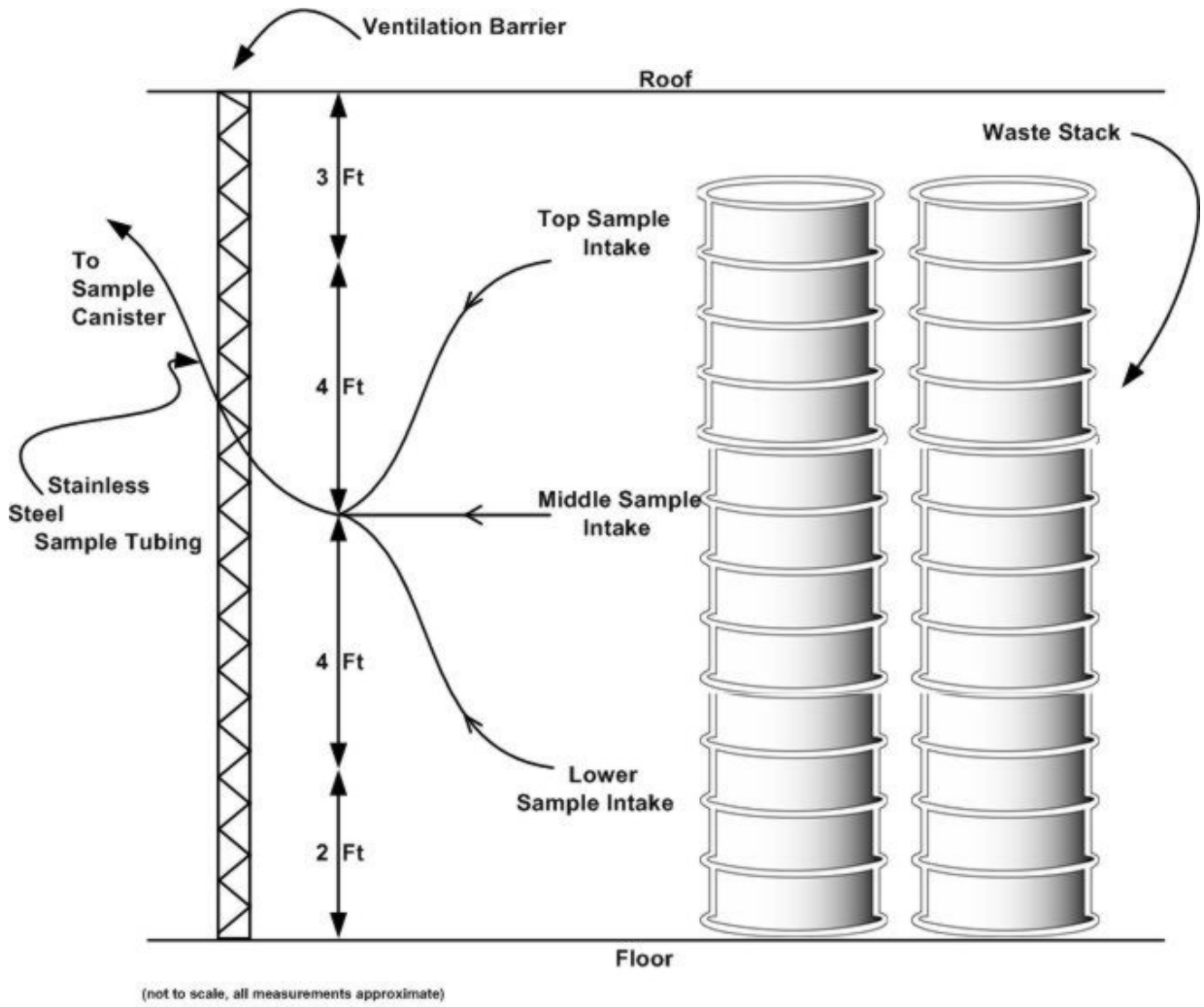

Figure N-4
VOC Sample Head Arrangement